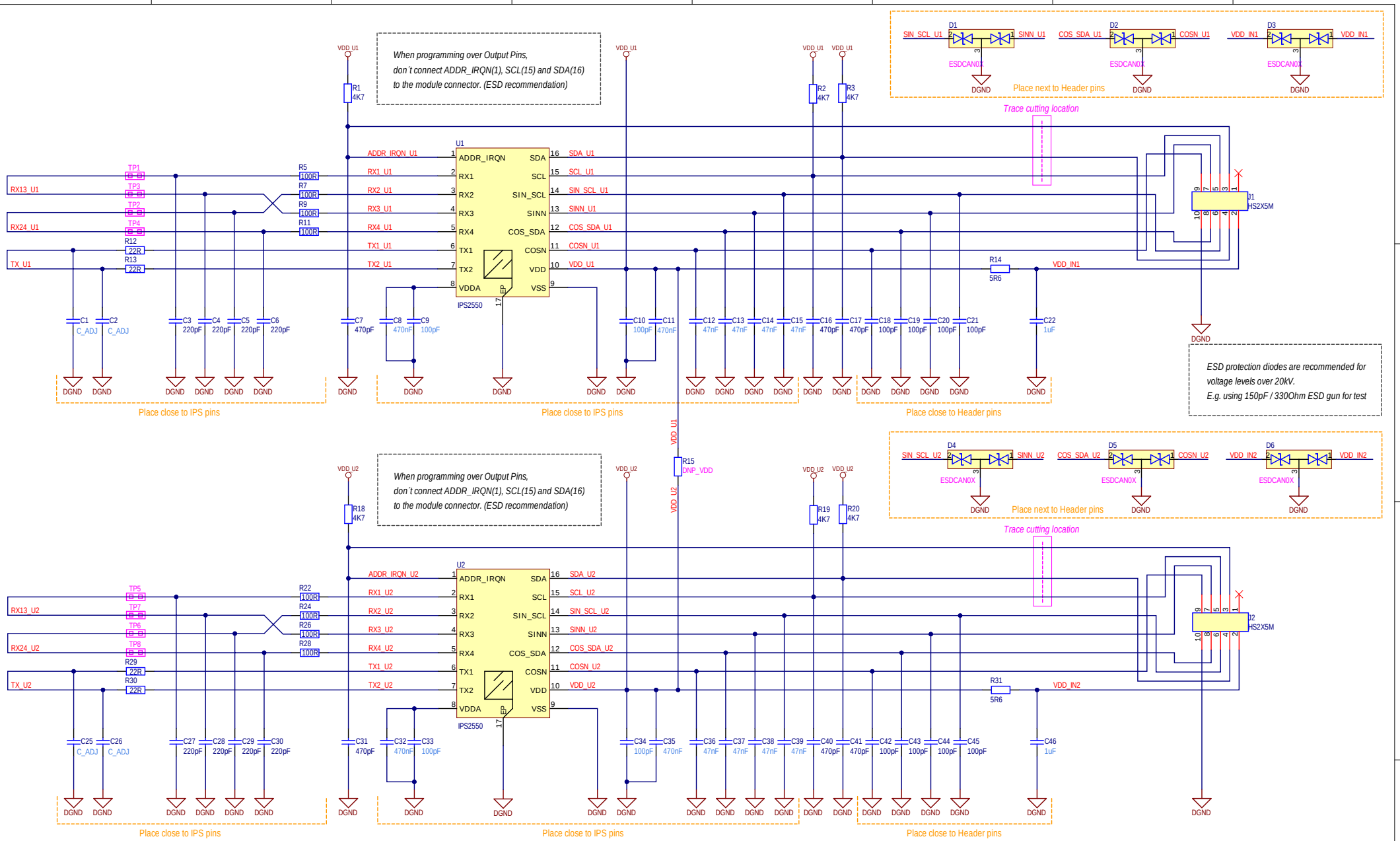

DNP_VDD: Populate R15 = 0E to short VDD_U1 + VDD_U2

C_ADJ = To be adjusted according to coil incductivity. Calculate C_TX with the given formula.
C_ADJ = 2 x C_TX when separate transmitters are in use
Calculate C_ADJ individually for each TX
It´s recommended to use C0G or NP0 ceramic capacitors

Use dielectric strength Vr >= 50V capacitors for C7 + (C10 .. C22) and C31 + (C34 .. C46)

LEGEND

- Component Size 0603
- Component Size 0402
- Net Name
- Component Placement Suggestion
- Optional Component

$$f_{TX} = \frac{1}{2\pi\sqrt{L_{TX}C_{TX}}} \rightarrow C_{TX} = \frac{1}{(2\pi f_{TX})^2 L_{TX}}$$

Project name	IPS2550_DUAL_TEMPLATE_V40.PrjPcb		Version	1.0	RENESAS BIG IDEAS FOR EVERY SPACE
Sheet title	IPS2550_DUAL_TEMPLATE_V30		Size	A3	
File name	IPS2550_DUAL_TEMPLATE_V40.SchDoc				
Date	02.06.2021	SYS. APP. ENG. TEAM	Drawn by	B.GOMBOR	Sheet 1 of 1