GX64470 Package Outline Drawing

13.0 x 19.0 x 3.4 mm Module

MOD0D1, PSC-4738-01, Rev 01, Page 1

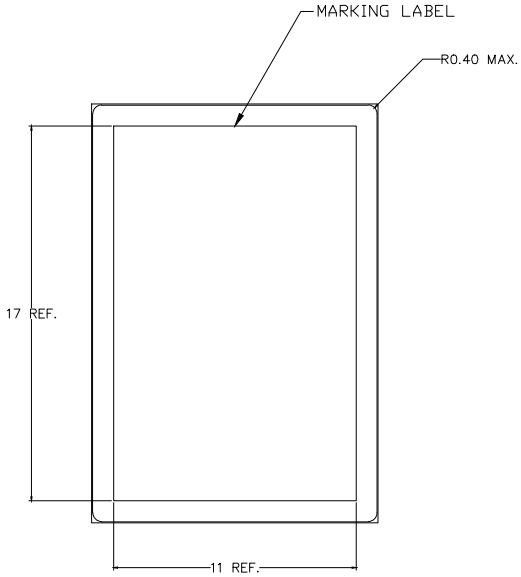

TOP VIEW

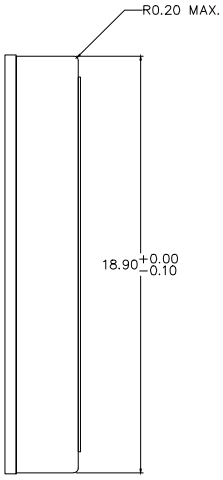

SIDE VIEW - RF INPUTS

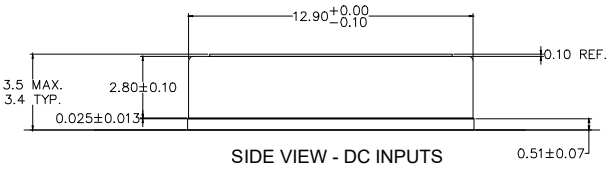

SIDE VIEW - DC INPUTS

NOTES:
1. ALL DIMENSIONS ARE IN MILLIMETERS (mm).
2. TOLERANCES ARE ±0.15mm UNLESS OTHERWISE SPECIFIED.
3. CONNECT UNLABELED (LARGE) PADS TO GROUND.
4. PADS LABELED "NC" ARE NOT INTERNALY CONNECTED.

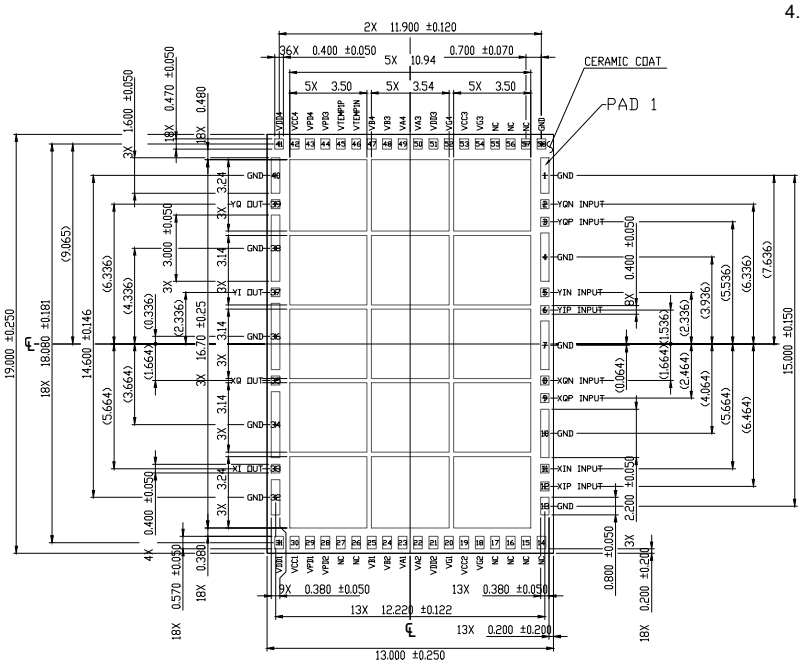

BOTTOM VIEW

Package Revision History		
Date Created	Rev No.	Description
Nov 21, 2017	Rev 00	Initial Release
Jun 21, 2021	Rev 01	Update to Renesas Logo

© Renesas Electronics Corporation