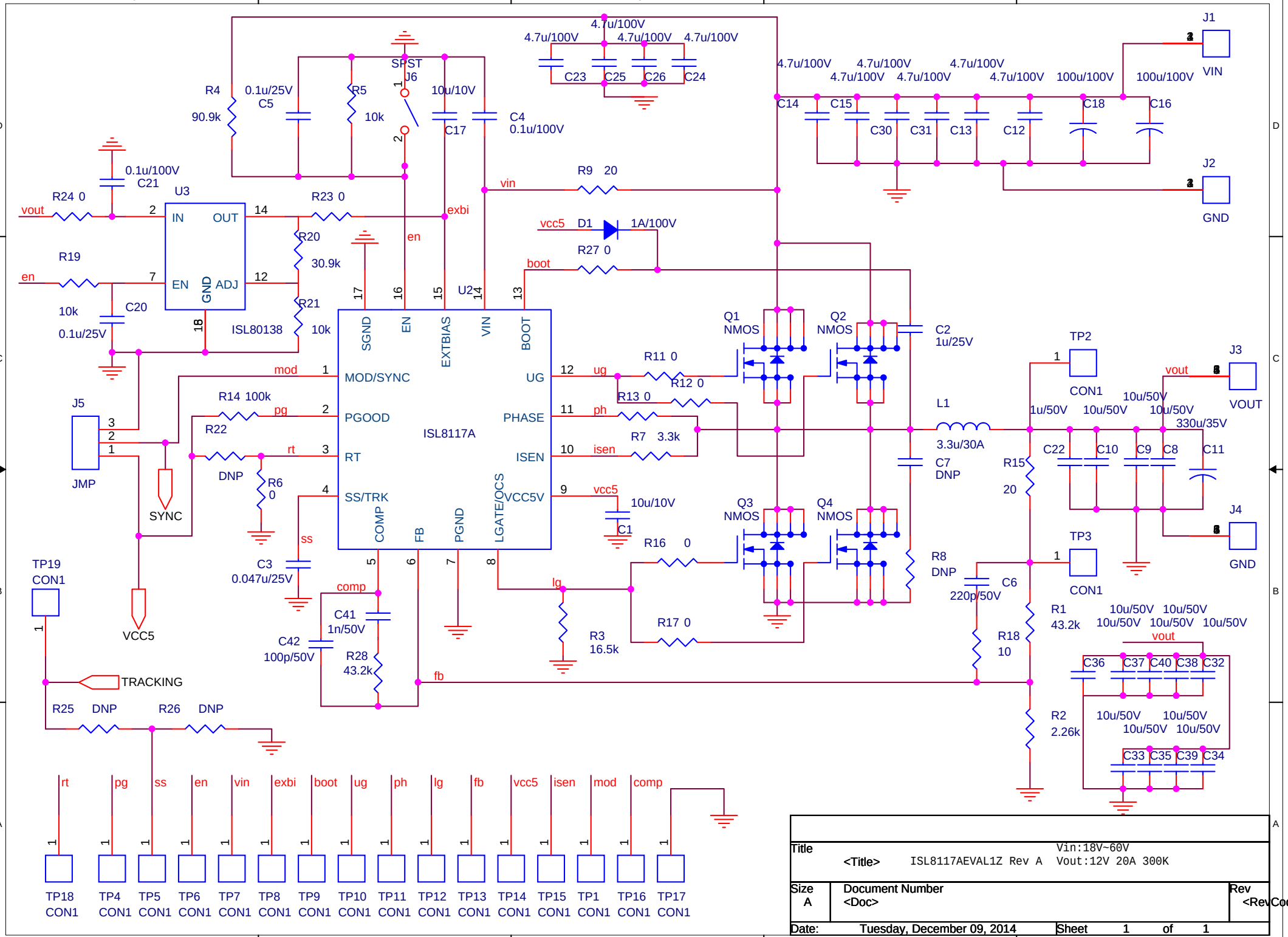

Title	Vin:18V~60V <Title> ISL8117AEVAL1Z Rev A Vout:12V 20A 300K	
Size A	Document Number <Doc>	Rev <RevCode>
Date: Tuesday, December 09, 2014	Sheet 1 of 1	