Ceiling FAN Inverter Board with RX13T
(APINV003-RX13T-CEILING)
Schematic

01 : Inverter circuit
02 : MCU Parts circuit
03 : Histrory

Title	Ceiling FAN Inverter Board with RX13T	
Size	Number R12TU0154EJ	Rev 1.0
Checked by	Approved by	
Date	Drawn by	
Filename	Sheet 1 of 4	

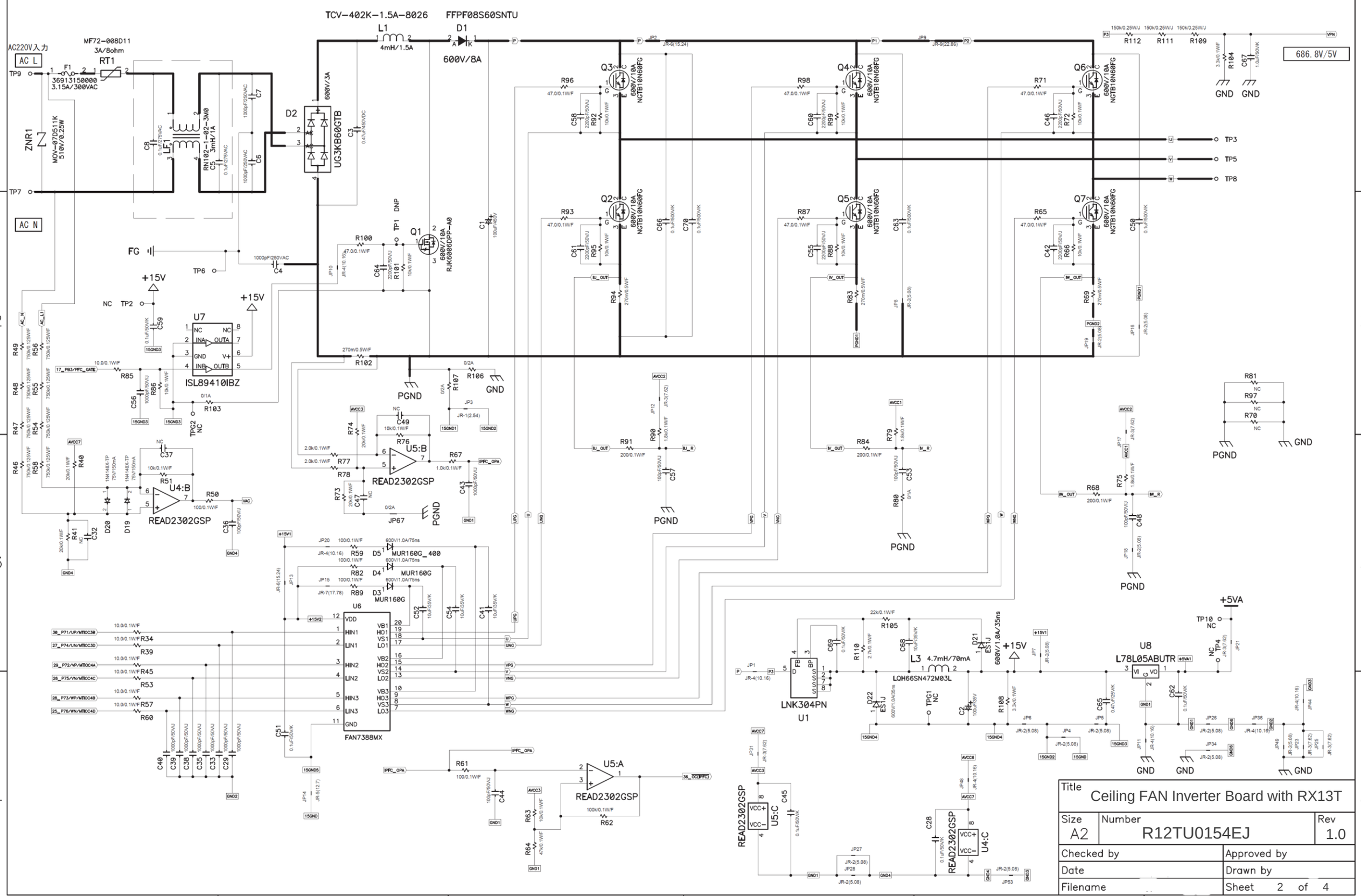

Title	Ceiling FAN Inverter Board with RX13T	
Size A2	Number R12TU0154EJ	Rev 1.0
Checked by		Approved by
Date		Drawn by
Filename		Sheet 2 of 4

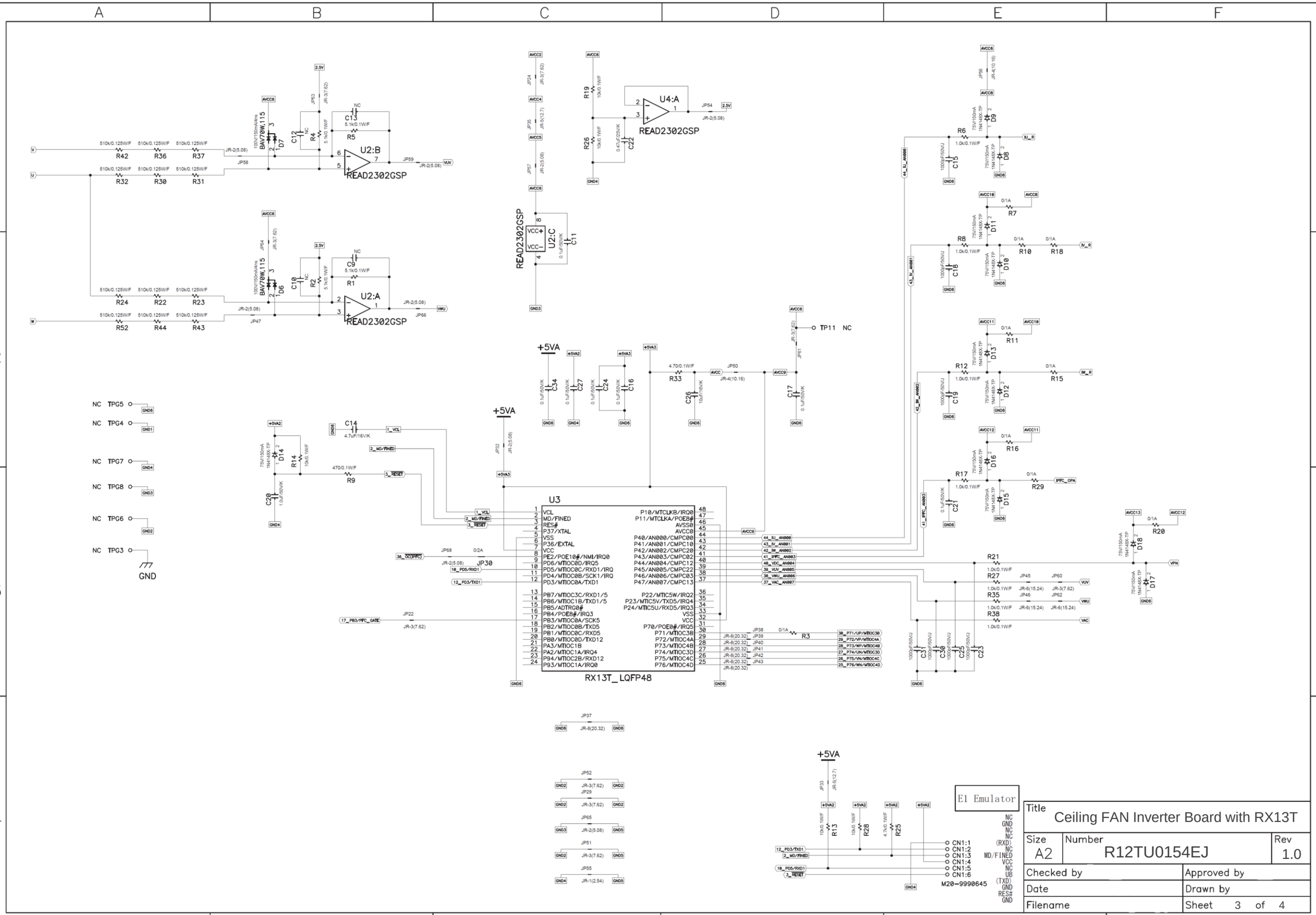
U2:B
READ2302GSP
U2:A
READ2302GSP
U4:A
READ2302GSP
U2:C
READ2302GSP
U3
RX13T_LQFP48
+5VA
GND
E1 Emulator
M20-9990645
Title
Ceiling FAN Inverter Board with RX13T
Size
A2
Number
R12TU0154EJ
Rev
1.0
Checked by
Approved by
Date
Drawn by
Filename
Sheet 3 of 4

History

Rev.	Date	Page	Summary
1.0	2021/9/9	-	First edition

Title	Ceiling FAN Inverter Board with RX13T	
Size	Number R12TU0154EJ	Rev 1.0
Checked by	Approved by	
Date	Drawn by	
Filename	Sheet 4 of 4	