RTKA211230DE0020BU

The RAA211230 is an integrated 24V, 3A synchronous buck regulator with constant on-time (COT) current mode control. It supports a wide input voltage range from 4.5V to 24V. The RTKA211230DE0020BU evaluation board provides a quick and comprehensive platform for evaluating the performance features of RAA211230 buck regulator.

The RTKA211230DE0020BU evaluation board operates from a supply voltage of 4.5V to 24V_{DC} with the capability of delivering continuous load of 3A and 3.3V output voltage.

Specifications

The board is configured and optimized for the following operating conditions:

- Input voltage range: 4.5V to 24V
- Output voltage: 3.3V
- Up to 3A output current capability
- Operating temperature range: -40°C to +125°C

Features

- 4.5V to 24V input supply range.
- Integrated high-side (85mΩ) and low-side (45mΩ) MOSFETs
- Iq = 400µA, no switching
- Minimum on-time 90ns typical, minimum off-time 300ns typical
- Reference voltage 0.765V with 2% tolerance for room temperature
- V_{OUT} programmable by changing the FB voltage divider
- 500kHz nominal switching frequency
- Current mode COT control with internal compensation
- Internal 0.8ms soft-start
- Protections: LSOC Limit, VIN UVLO, OTP, UVP with Hiccup mode

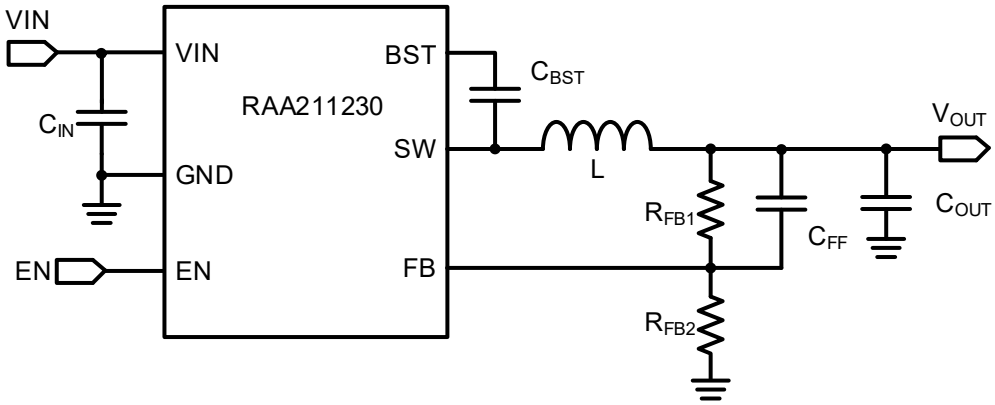

Figure 1. RTKA211230DE0020BU Block Diagram

© 2021-2023 Renesas Electronics

Contents

1. Functional Description . . . 3
1.1 Operating Range . . . 3
1.2 Connectors, Test Points, Selection Switches, and Jumper Descriptions . . . 3
1.3 Recommended Equipment . . . 4
1.4 Quick Start Guide . . . 4
2. Board Design . . . 5
2.1 PCB Layout Guidelines . . . 5
2.2 RTKA211230DE0020BU Circuit Schematic . . . 6
2.3 Bill of Materials . . . 7
2.4 Board Layout . . . 8
3. Typical Performance Graphs . . . 9
4. Ordering Information . . . 10
5. Revision History . . . 10

1. Functional Description

The RTKA211230DE0020BU provides a comprehensive and versatile platform to evaluate functionality and prototype an application of the integrated 24V, 3A synchronous buck regulator RAA211230. This evaluation board includes the options to evaluate most of the features of RAA211230. Test points have been included for easy probing to evaluate the features.

1.1 Operating Range

The RTKA211230DE0020BU evaluation board evaluates RAA211230 with VIN from 4.5V to 24V and continuous load of 3A. For proper functioning of the evaluation board, Renesas recommends operating the board within these specifications.

The inductance, capacitance and feedback resistor values of the regulator were chosen for 3.3V V_{OUT} and 500kHz switching frequency. You can replace these components with different values if a different operating condition is required.

EN is connected to VIN through a 0Ω resistor. You can also connect EN to an external logic voltage to enable and disable by disconnecting jumper JP1. Alternatively, you can replace R1 with an appropriate resistor to obtain V_{IN} UVLO protection (JP1 connected between 2 and 3).

Updates on the FB resistor divider, inductor, and output capacitor may be required with changes in the operating load and output voltage.

1.2 Connectors, Test Points, Selection Switches, and Jumper Descriptions

The RTKA211230DE0020BU evaluation board includes I/O connectors, test points, selection switch, and jumpers to provide a comprehensive and versatile platform for evaluation of RAA211230. Table 1 shows the description of them.

Table 1. Connectors, Test Points, Selection Switches, and Jumper Descriptions

Ref DES	Description
J1	Input voltage positive connection
J2	Input voltage return connection
J3	Output voltage positive connection
J4	Output voltage return connection
TP1	Vin test point
TP2	Ground test point
TP3	ENABLE test point
TP4	VSW test point
TP5	VOUTN test point
TP6	VOUT test point
TP7	Ground test point
TP8	Ground test point
JP1	Jumper pin for Enable/Disable

1.2.1 Enable

When JP1 is connected between terminals 2 and 3, VIN gets connected to EN through a 0Ω resistor (R1). Connecting JP1 to terminals 1 and 2 causes EN to connect to ground and the part becomes disabled.

The default VIN UVLO (R1 = 0Ω) is set to 4.3V with hysteresis of 350mV. To obtain programmable V_{IN} UVLO protection, JP1 can be connected to terminals 2 and 3, and R1 is selected using Equation 1 where VIN_{UVLO} is the required UVLO point.

(EQ. 1) $$R1 = \left(\frac{VIN_{UVLO} - 1.3}{1.3}\right) \times 10^4$$

1.2.2 Soft-Start

The RTKA211230DE0020BU is set for an internal soft-start of 0.8ms.

1.2.3 Switching Frequency

The RTKA211230DE0020BU is set for a nominal switching frequency of 500kHz. Under light load conditions, the part operates in PFM mode (variable frequency).

1.2.4 VOUT Programming

The output voltage can be programmed by adjusting the values of the feedback resistors (R5 and R6) as in Equation 2 where V_{OUT} is the required output voltage.

(EQ. 2) $$\frac{R5}{R6} = \frac{V_{OUT} - 0.765}{0.765}$$

1.3 Recommended Equipment

- Power supply that can deliver 4.5V or higher with at least 3A source current capability
- Electronic load capable of sinking at least 3A current
- 4-channel oscilloscope with voltage and current probes

1.4 Quick Start Guide

Use the following Quick Setup Guide to configure and power-up the board for proper operation.

1. Set the power supply voltage to 24V and turn off the power supply. Connect the positive output of the power supply to J1 (VIN) and the negative output to J2 (GND).
2. Connect a jumper connector across jumper pins 2 and 3 (JP1). (Disconnect jumper connector if using external logic for enable).
3. Connect an electronic load to J3 (V_{OUT}) for the positive connection and J4 (GND) for the negative connection.
4. Place scope probes to VOUT (TP6), VSW (TP3), and/or other test points of interest.
5. Set the load current to 0.1A and turn on the power supply. The output voltage should be in regulation with nominal 3.3V output.
6. Slowly increase the load up to 3A. The output voltage should remain in regulation with nominal 3.3V output.
7. Slowly sweep VIN from 24V to 4.5V. The output voltage should remain in regulation with nominal 3.3V output.
8. Decrease the input voltage to 0V to shut down the regulator.

2. Board Design

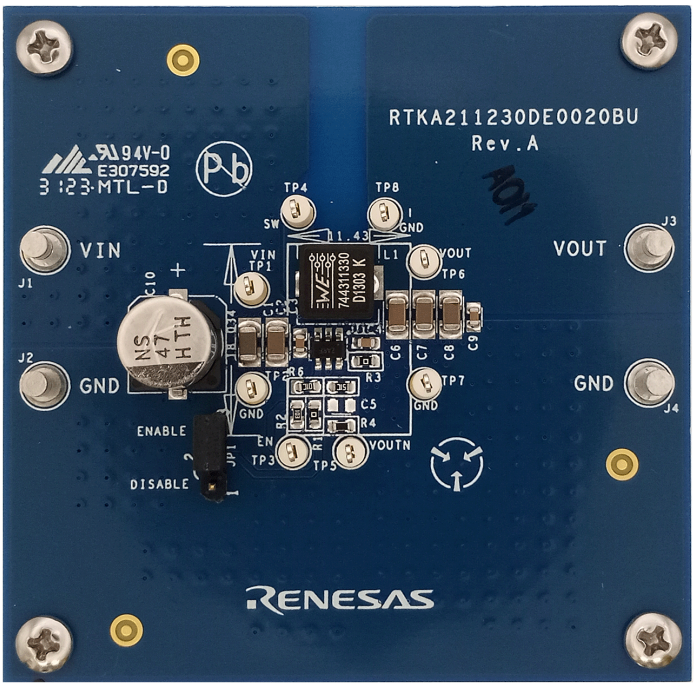

Figure 2. RTKA211230DE0020BU Evaluation Board (Top)

2.1 PCB Layout Guidelines

The printed circuit board (PCB) layout is critical for proper operation of the RAA211230. The following guidelines are recommended to achieve good performance.

1. Renesas recommends using a double-sided (two layer) PCB. 2oz copper is recommended. Use the bottom side as ground. Place the ceramic input capacitors on the same side of the PCB as the IC.
2. Use a combination of a bulk capacitor and smaller ceramic capacitors with low ESL for input capacitors and place them as close as possible to the IC.
3. Place bootstrap capacitors close to the IC between BST and SW pins on the same side of the PCB as the IC. Renesas recommends using a 0.1µF ceramic capacitor.
4. Route the output voltage feedback signal away from SW and BST. Place feedback resistors close to the FB pin of the regulator.
5. The copper area of the SW node should not be more than needed. Place the inductor close to regulator.
6. Place an output capacitor close to the inductor.

2.2 RTKA211230DE0020BU Circuit Schematic

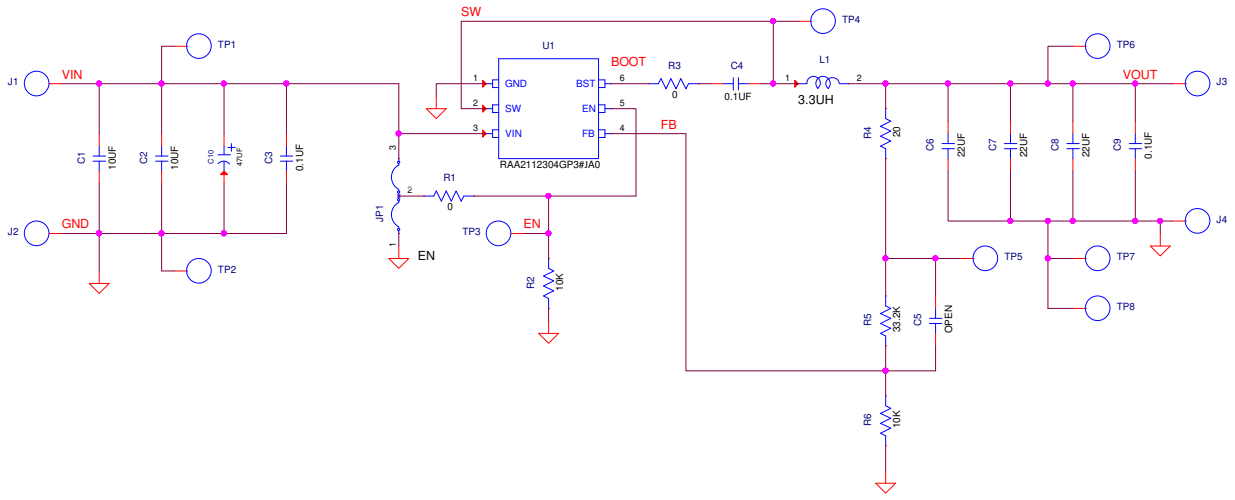

Figure 3. RTKA211230DE0020BU Schematic

2.3 Bill of Materials

Qty	Ref Des	Description	Manufacturer	Part Number
4	J1, J2, J3, J4	Brass Test Point Turret 0.150 Pad 0.100 Thole PCB Depth < 0.078 in	Keystone	1502-1
8	TP1-TP8	Miniature White Test Point 0.100 Pad 0.040 Thole	Keystone	5002
1	C10	THV Series Aluminum Electrolytic Capacitor, 47µF, 20%, 50V, SMD	Rubycon	50THV47M8X10.5
1	L1	WE-HCI SMD High Current Inductor, 3.3µH, 20%, 9A, No shield	Wurth Elektronik	744311330
3	C6, C7, C8	Ceramic Cap, 22µF, 20%, 16V, 1206	Murata	C1206C226M4PAC7800
2	C3, C9	Multilayer Cap, 0.1µF, 20%, 50V, 0603	TDK	C1608X7R1H104M
1	R2	Chip Resistor, 10k, 0.1%, 1/10W, 0603	Panasonic	ERA-3AEB103V
1	R4	Thick Film Chip Resistor, 20, 1%, 1/10W, 0603	Panasonic	ERJ-3EKF20R0V
1	C4	Multilayer Cap, 0.1µF, 10%, 50V, 0603	Various	Generic
1	C5	DNP		
2	R1, R3	Thick Film Chip Resistor, 0Ω, 1%, 1/16W, 0603	Various	Generic
1	R6	Thick Film Chip Resistor, 10k, 1%, 1/16W, 0603	Various	Generic
1	R5	Thick Film Chip Resistor, 33.2k, 1%, 1/16W, 0603	Various	Generic
1	JP1	Three Pin Jumper, THOLE	Generic	JUMPER-3-100
1	U1	24V Input Voltage 3A Integrated Switching Regulator, TSOT6	Renesas	RAA2112304GP3#JA0
2	C1, C2	Multilayer Cap, 10µF, 10%, 25V, 1206	TAIYO YUDEN	TMK316B7106KL-TD

2.4 Board Layout

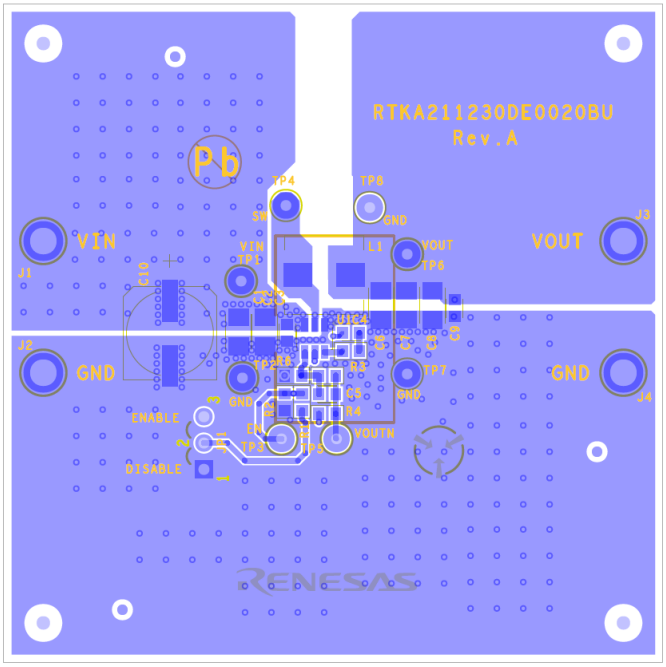

Figure 4. Top Layer

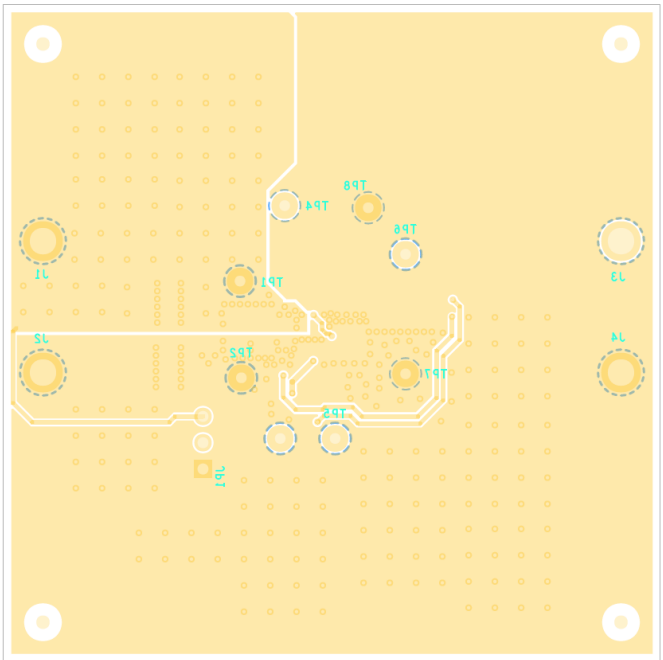

Figure 5. Bottom Layer

3. Typical Performance Graphs

V_{IN} = 12V, V_{OUT} = 3.3V, $T_{\overline{A}}$ = +25°C, EN connected to VIN unless otherwise stated.

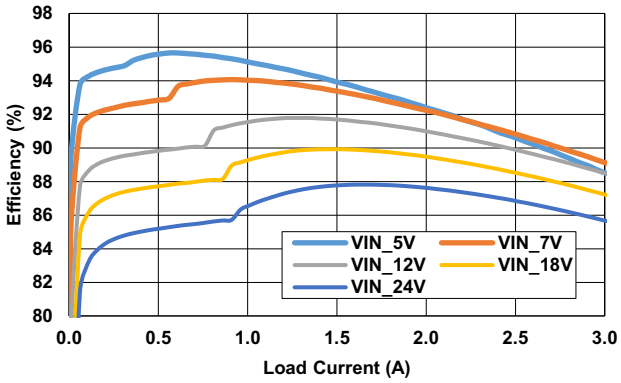

Figure 6. Efficiency vs Load Current

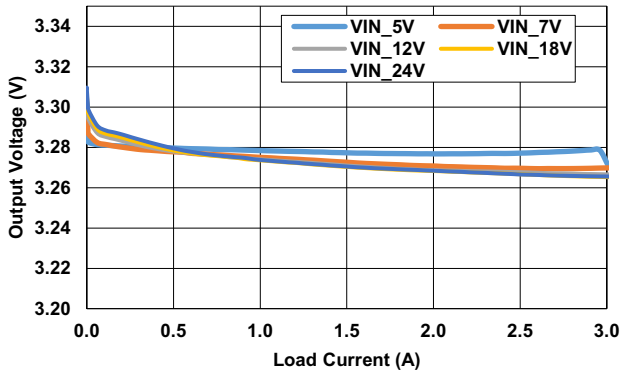

Figure 7. Load Regulation

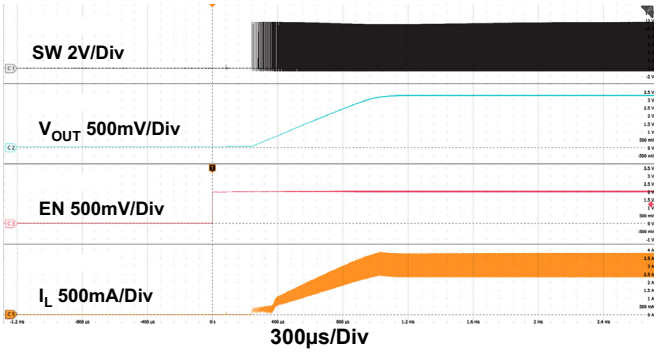

Figure 8. Start-Up, V_{IN} = 12V, I_{OUT} = 3A

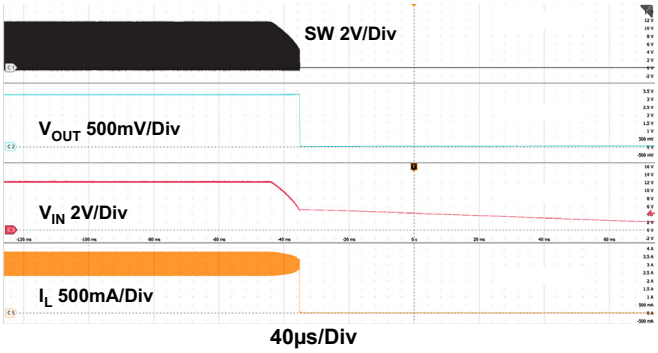

Figure 9. Shutdown, V_{IN} = 12V, I_{OUT} = 3A

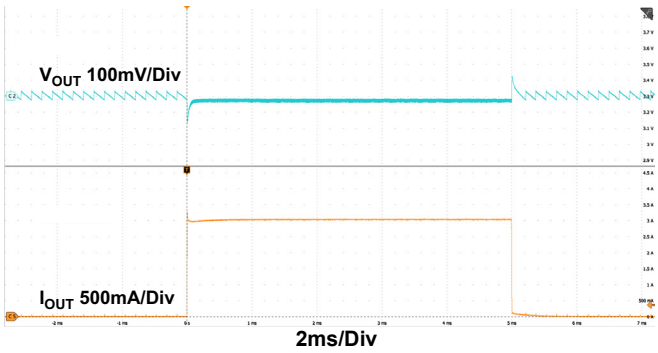

Figure 10. Load Transient (100mA-3A)

4. Ordering Information

Part Number	Description
RTKA211230DE0020BU	RAA211230 TSOT23-6 evaluation board

5. Revision History

Rev.	Date	Description
3.00	Sep 22, 2023	Updated Board image. Updated Schematic.
2.03	Oct 5, 2022	Corrected description of C1, C2 in the BOM.
2.02	Aug 29, 2022	Updated Schematic. Updated BOM.
2.01	Jun 27, 2022	Updated features. Updated schematic, Figure 4. Updated Figures 7 to 11. Updated BOM.
2.00	Jan 28, 2022	Updated VIN maximum from 16V to 24V throughout the document. Updated Figures 7 and 8.
1.01	Jan 20, 2022	In BOM, updated L1 to 744311330.
1.00	Oct 28, 2021	Initial release

IMPORTANT NOTICE AND DISCLAIMER

RENESAS ELECTRONICS CORPORATION AND ITS SUBSIDIARIES (“RENESAS”) PROVIDES TECHNICAL SPECIFICATIONS AND RELIABILITY DATA (INCLUDING DATASHEETS), DESIGN RESOURCES (INCLUDING REFERENCE DESIGNS), APPLICATION OR OTHER DESIGN ADVICE, WEB TOOLS, SAFETY INFORMATION, AND OTHER RESOURCES “AS IS” AND WITH ALL FAULTS, AND DISCLAIMS ALL WARRANTIES, EXPRESS OR IMPLIED, INCLUDING, WITHOUT LIMITATION, ANY IMPLIED WARRANTIES OF MERCHANTABILITY, FITNESS FOR A PARTICULAR PURPOSE, OR NON-INFRINGEMENT OF THIRD PARTY INTELLECTUAL PROPERTY RIGHTS.

These resources are intended for developers skilled in the art designing with Renesas products. You are solely responsible for (1) selecting the appropriate products for your application, (2) designing, validating, and testing your application, and (3) ensuring your application meets applicable standards, and any other safety, security, or other requirements. These resources are subject to change without notice. Renesas grants you permission to use these resources only for development of an application that uses Renesas products. Other reproduction or use of these resources is strictly prohibited. No license is granted to any other Renesas intellectual property or to any third party intellectual property. Renesas disclaims responsibility for, and you will fully indemnify Renesas and its representatives against, any claims, damages, costs, losses, or liabilities arising out of your use of these resources. Renesas' products are provided only subject to Renesas' Terms and Conditions of Sale or other applicable terms agreed to in writing. No use o any Renesas resources expands or otherwise alters any applicable warranties or warranty disclaimers for these products.

(Disclaimer Rev.1.0 Mar 2020)

Corporate Headquarters

TOYOSU FORESIA, 3-2-24 Toyosu,
Koto-ku, Tokyo 135-0061, Japan
www.renesas.com

Contact Information

For further information on a product, technology, the most up-to-date version of a document, or your nearest sales office, please visit:
www.renesas.com/contact/

Trademarks

Renesas and the Renesas logo are trademarks of Renesas Electronics Corporation. All trademarks and registered trademarks are the property of their respective owners.

© 2023 Renesas Electronics Corporation. All rights reserved.