User's Manual

RA6E2 Group

Fast Prototyping Board for RA6E2 Microcontroller Group
FPB-RA6E2 v1
User's Manual

Renesas RA Family
RA6 Series

All information contained in these materials, including products and product specifications, represents information on the product at the time of publication and is subject to change by Renesas Electronics Corp. without notice. Please review the latest information published by Renesas Electronics Corp. through various means, including the Renesas Electronics Corp. website (http://www.renesas.com).

Renesas Electronics
www.renesas.com

Rev. 1.00 Jun 2023

Notice

1. Descriptions of circuits, software and other related information in this document are provided only to illustrate the operation of semiconductor products and application examples. You are fully responsible for the incorporation or any other use of the circuits, software, and information in the design of your product or system. Renesas Electronics disclaims any and all liability for any losses and damages incurred by you or third parties arising from the use of these circuits, software, or information.
2. Renesas Electronics hereby expressly disclaims any warranties against and liability for infringement or any other claims involving patents, copyrights, or other intellectual property rights of third parties, by or arising from the use of Renesas Electronics products or technical information described in this document, including but not limited to, the product data, drawings, charts, programs, algorithms, and application examples.
3. No license, express, implied or otherwise, is granted hereby under any patents, copyrights or other intellectual property rights of Renesas Electronics or others.
4. You shall be responsible for determining what licenses are required from any third parties, and obtaining such licenses for the lawful import, export, manufacture, sales, utilization, distribution or other disposal of any products incorporating Renesas Electronics products, if required.
5. You shall not alter, modify, copy, or reverse engineer any Renesas Electronics product, whether in whole or in part. Renesas Electronics disclaims any and all liability for any losses or damages incurred by you or third parties arising from such alteration, modification, copying or reverse engineering.
6. Renesas Electronics products are classified according to the following two quality grades: “Standard” and “High Quality”. The intended applications for each Renesas Electronics product depends on the product’s quality grade, as indicated below.
   "Standard": Computers; office equipment; communications equipment; test and measurement equipment; audio and visual equipment; home electronic appliances; machine tools; personal electronic equipment; industrial robots; etc.
   "High Quality": Transportation equipment (automobiles, trains, ships, etc.); traffic control (traffic lights); large-scale communication equipment; key financial terminal systems; safety control equipment; etc.
   Unless expressly designated as a high reliability product or a product for harsh environments in a Renesas Electronics data sheet or other Renesas Electronics document, Renesas Electronics products are not intended or authorized for use in products or systems that may pose a direct threat to human life or bodily injury (artificial life support devices or systems; surgical implantations; etc.), or may cause serious property damage (space system; undersea repeaters; nuclear power control systems; aircraft control systems; key plant systems; military equipment; etc.). Renesas Electronics disclaims any and all liability for any damages or losses incurred by you or any third parties arising from the use of any Renesas Electronics product that is inconsistent with any Renesas Electronics data sheet, user’s manual or other Renesas Electronics document.
7. No semiconductor product is absolutely secure. Notwithstanding any security measures or features that may be implemented in Renesas Electronics hardware or software products, Renesas Electronics shall have absolutely no liability arising out of any vulnerability or security breach, including but not limited to any unauthorized access to or use of a Renesas Electronics product or a system that uses a Renesas Electronics product. RENESAS ELECTRONICS DOES NOT WARRANT OR GUARANTEE THAT RENESAS ELECTRONICS PRODUCTS, OR ANY SYSTEMS CREATED USING RENESAS ELECTRONICS PRODUCTS WILL BE INVULNERABLE OR FREE FROM CORRUPTION, ATTACK, VIRUSES, INTERFERENCE, HACKING, DATA LOSS OR THEFT, OR OTHER SECURITY INTRUSION (“Vulnerability Issues”). RENESAS ELECTRONICS DISCLAIMS ANY AND ALL RESPONSIBILITY OR LIABILITY ARISING FROM OR RELATED TO ANY VULNERABILITY ISSUES. FURTHERMORE, TO THE EXTENT PERMITTED BY APPLICABLE LAW, RENESAS ELECTRONICS DISCLAIMS ANY AND ALL WARRANTIES, EXPRESS OR IMPLIED, WITH RESPECT TO THIS DOCUMENT AND ANY RELATED OR ACCOMPANYING SOFTWARE OR HARDWARE, INCLUDING BUT NOT LIMITED TO THE IMPLIED WARRANTIES OF MERCHANTABILITY, OR FITNESS FOR A PARTICULAR PURPOSE.
8. When using Renesas Electronics products, refer to the latest product information (data sheets, user’s manuals, application notes, “General Notes for Handling and Using Semiconductor Devices” in the reliability handbook, etc.), and ensure that usage conditions are within the ranges specified by Renesas Electronics with respect to maximum ratings, operating power supply voltage range, heat dissipation characteristics, installation, etc. Renesas Electronics disclaims any and all liability for any malfunctions, failure or accident arising out of the use of Renesas Electronics products outside of such specified ranges.
9. Although Renesas Electronics endeavors to improve the quality and reliability of Renesas Electronics products, semiconductor products have specific characteristics, such as the occurrence of failure at a certain rate and malfunctions under certain use conditions. Unless designated as a high reliability product or a product for harsh environments in a Renesas Electronics data sheet or other Renesas Electronics document, Renesas Electronics products are not subject to radiation resistance design. You are responsible for implementing safety measures to guard against the possibility of bodily injury, injury or damage caused by fire, and/or danger to the public in the event of a failure or malfunction of Renesas Electronics products, such as safety design for hardware and software, including but not limited to redundancy, fire control and malfunction prevention, appropriate treatment for aging degradation or any other appropriate measures. Because the evaluation of microcomputer software alone is very difficult and impractical, you are responsible for evaluating the safety of the final products or systems manufactured by you.
10. Please contact a Renesas Electronics sales office for details as to environmental matters such as the environmental compatibility of each Renesas Electronics product. You are responsible for carefully and sufficiently investigating applicable laws and regulations that regulate the inclusion or use of controlled substances, including without limitation, the EU RoHS Directive, and using Renesas Electronics products in compliance with all these applicable laws and regulations. Renesas Electronics disclaims any and all liability for damages or losses occurring as a result of your noncompliance with applicable laws and regulations.
11. Renesas Electronics products and technologies shall not be used for or incorporated into any products or systems whose manufacture, use, or sale is prohibited under any applicable domestic or foreign laws or regulations. You shall comply with any applicable export control laws and regulations promulgated and administered by the governments of any countries asserting jurisdiction over the parties or transactions.
12. It is the responsibility of the buyer or distributor of Renesas Electronics products, or any other party who distributes, disposes of, or otherwise sells or transfers the product to a third party, to notify such third party in advance of the contents and conditions set forth in this document.
13. This document shall not be reprinted, reproduced or duplicated in any form, in whole or in part, without prior written consent of Renesas Electronics.
14. Please contact a Renesas Electronics sales office if you have any questions regarding the information contained in this document or Renesas Electronics products.

(Note1) “Renesas Electronics” as used in this document means Renesas Electronics Corporation and also includes its directly or indirectly controlled subsidiaries.
(Note2) “Renesas Electronics product(s)” means any product developed or manufactured by or for Renesas Electronics.

(Rev.5.0-1 October 2020)

Corporate Headquarters

TOYOSU FORESIA, 3-2-24 Toyosu,
Koto-ku, Tokyo 135-0061, Japan
www.renesas.com

Trademarks

Renesas and the Renesas logo are trademarks of Renesas Electronics Corporation. All trademarks and registered trademarks are the property of their respective owners.

Contact information

For further information on a product, technology, the most up-to-date version of a document, or your nearest sales office, please visit:
www.renesas.com/contact/.

© 2023 Renesas Electronics Corporation. All rights reserved.

General Precautions in the Handling of Microprocessing Unit and Microcontroller Unit Products

The following usage notes are applicable to all Microprocessing unit and Microcontroller unit products from Renesas. For detailed usage notes on the products covered by this document, refer to the relevant sections of the document as well as any technical updates that have been issued for the products.

1. Precaution against Electrostatic Discharge (ESD)

   A strong electrical field, when exposed to a CMOS device, can cause destruction of the gate oxide and ultimately degrade the device operation. Steps must be taken to stop the generation of static electricity as much as possible, and quickly dissipate it when it occurs. Environmental control must be adequate. When it is dry, a humidifier should be used. This is recommended to avoid using insulators that can easily build up static electricity. Semiconductor devices must be stored and transported in an anti-static container, static shielding bag or conductive material. All test and measurement tools including work benches and floors must be grounded. The operator must also be grounded using a wrist strap. Semiconductor devices must not be touched with bare hands. Similar precautions must be taken for printed circuit boards with mounted semiconductor devices.
2. Processing at power-on

   The state of the product is undefined at the time when power is supplied. The states of internal circuits in the LSI are indeterminate and the states of register settings and pins are undefined at the time when power is supplied. In a finished product where the reset signal is applied to the external reset pin, the states of pins are not guaranteed from the time when power is supplied until the reset process is completed. In a similar way, the states of pins in a product that is reset by an on-chip power-on reset function are not guaranteed from the time when power is supplied until the power reaches the level at which resetting is specified.
3. Input of signal during power-off state

   Do not input signals or an I/O pull-up power supply while the device is powered off. The current injection that results from input of such a signal or I/O pull-up power supply may cause malfunction and the abnormal current that passes in the device at this time may cause degradation of internal elements. Follow the guideline for input signal during power-off state as described in your product documentation.
4. Handling of unused pins

   Handle unused pins in accordance with the directions given under handling of unused pins in the manual. The input pins of CMOS products are generally in the high-impedance state. In operation with an unused pin in the open-circuit state, extra electromagnetic noise is induced in the vicinity of the LSI, an associated shoot-through current flows internally, and malfunctions occur due to the false recognition of the pin state as an input signal become possible.
5. Clock signals

   After applying a reset, only release the reset line after the operating clock signal becomes stable. When switching the clock signal during program execution, wait until the target clock signal is stabilized. When the clock signal is generated with an external resonator or from an external oscillator during a reset, ensure that the reset line is only released after full stabilization of the clock signal. Additionally, when switching to a clock signal produced with an external resonator or by an external oscillator while program execution is in progress, wait until the target clock signal is stable.
6. Voltage application waveform at input pin

   Waveform distortion due to input noise or a reflected wave may cause malfunction. If the input of the CMOS device stays in the area between V_{IL} (Max.) and V_{IH} (Min.) due to noise, for example, the device may malfunction. Take care to prevent chattering noise from entering the device when the input level is fixed, and also in the transition period when the input level passes through the area between V_{IL} (Max.) and V_{IH} (Min.).
7. Prohibition of access to reserved addresses

   Access to reserved addresses is prohibited. The reserved addresses are provided for possible future expansion of functions. Do not access these addresses as the correct operation of the LSI is not guaranteed.
8. Differences between products

   Before changing from one product to another, for example to a product with a different part number, confirm that the change will not lead to problems. The characteristics of a microprocessing unit or microcontroller unit products in the same group but having a different part number might differ in terms of internal memory capacity, layout pattern, and other factors, which can affect the ranges of electrical characteristics, such as characteristic values, operating margins, immunity to noise, and amount of radiated noise. When changing to a product with a different part number, implement a system-evaluation test for the given product.

Renesas FPB-RA6E2 Disclaimer

By using this FPB-RA6E2, the User accepts the following terms, which are in addition to, and control in the event of disagreement, with Renesas' General Terms and Conditions available at renesas.com/legal-notices.

The FPB-RA6E2 is not guaranteed to be error free, and the entire risk as to the results and performance of the FPB-RA6E2 is assumed by the User. The FPB-RA6E2 is provided by Renesas on an "as is" basis without warranty of any kind whether express or implied, including but not limited to the implied warranties of good workmanship, fitness for a particular purpose, title, merchantability, and non-infringement of intellectual property rights. Renesas expressly disclaims any implied warranty.

Renesas does not consider the FPB-RA6E2 to be a finished product and therefore the FPB-RA6E2 may not comply with some requirements applicable to finished products, including, but not limited to recycling, restricted substances and electromagnetic compatibility regulations. Refer to Certifications section, for information about certifications and compliance information for the FPB-RA6E2. It is the kit User's responsibility to make sure the kit meets any local requirements applicable to their region.

Renesas or its affiliates shall in no event be liable for any loss of profit, loss of data, loss of contract, loss of business, damage to reputation or goodwill, any economic loss, any reprogramming or recall costs (whether the foregoing losses are direct or indirect) nor shall Renesas or its affiliates be liable for any other direct or indirect special, incidental or consequential damages arising out of or in relation to the use of this FPB-RA6E2, even if Renesas or its affiliates have been advised of the possibility of such damages.

Renesas has used reasonable care in preparing the information included in this document, but Renesas does not warrant that such information is error free nor does Renesas guarantee an exact match for every application or parameter to part numbers designated by other vendors listed herein. The information provided in this document is intended solely to enable the use of Renesas products. No express or implied license to any intellectual property right is granted by this document or in connection with the sale of Renesas products. Renesas reserves the right to make changes to specifications and product descriptions at any time without notice. Renesas assumes no liability for any damages incurred by you resulting from errors in or omissions from the information included herein. Renesas cannot verify, and assumes no liability for, the accuracy of information available on another company's website.

Precautions

This Fast Prototyping Board is only intended for use in a laboratory environment under ambient temperature and humidity conditions. A safe separation distance should be used between this and any sensitive equipment. Its use outside the laboratory, classroom, study area, or similar such area invalidates conformity with the protection requirements of the Electromagnetic Compatibility Directive and could lead to prosecution.

The product generates, uses, and can radiate radio frequency energy and may cause harmful interference to radio communications. There is no guarantee that interference will not occur in a particular installation. If this equipment causes harmful interference to radio or television reception, which can be determined by turning the equipment off or on, you are encouraged to try to correct the interference by one or more of the following measures:

• Ensure attached cables do not lie across the equipment.

• Reorient the receiving antenna.

• Increase the distance between the equipment and the receiver.

• Connect the equipment into an outlet on a circuit different from that which the receiver is connected.

• Power down the equipment when not in use.

• Consult the dealer or an experienced radio/TV technician for help.

Note: It is recommended that wherever possible shielded interface cables are used.

The product is potentially susceptible to certain EMC phenomena. To mitigate against them it is recommended that the following measures be undertaken:

• The user is advised that mobile phones should not be used within 10 m of the product when in use.

• The user is advised to take ESD precautions when handling the equipment.

The Evaluation Kit does not represent an ideal reference design for an end product and does not fulfil the regulatory standards for an end product.

Proprietary Notice

All text, graphics, photographs, trademarks, logos, artwork, and computer code, collectively known as content, contained in this document is owned, controlled, or licensed by or to Renesas, and is protected by trade dress, copyright, patent and trademark laws, and other intellectual property rights and unfair competition laws. Except as expressly provided herein, no part of this document or content may be copied, reproduced, republished, posted, publicly displayed, encoded, translated, transmitted, or distributed in any other medium for publication or distribution or for any commercial enterprise, without prior written consent from Renesas.

Arm® and Cortex® are registered trademarks of Arm Limited.

"Pmod™" is the trademark of Digilent Inc. The Pmod Interface Specification is the property of Digilent Inc. For more information on the use of the Pmod trademark, please see our Pmod License Agreement page.

Arduino® is a trademark of Arduino SA.

Other brands and names mentioned in this document may be the trademarks or registered trademarks of their respective holders.

Renesas RA Family

FPB-RA6E2 v1

Contents

Glossary 3

1. Board Overview 4
1.1 Assumptions and Advisory Notes 6

2. Box Contents 7

3. Ordering Information 7

4. Hardware Architecture and Default Configuration 8
4.1 Board Architecture 8
4.2 System Block Diagram 8
4.3 Jumper Settings 9
4.3.1 Copper Jumpers 9
4.3.2 Traditional Pin Header Jumpers 9
4.3.3 Default Jumper Configuration 9

5. System Control and Ecosystem Access 10
5.1 Power 10
5.1.1 Power Supply Options 11
5.1.2 Power Supply Considerations 12
5.1.3 Power-up Behavior 12
5.2 Debug and Trace 12
5.2.1 On-Board Debug 12
5.2.2 Debugger Settings in e^2 studio 13
5.3 Ecosystem 14
5.3.1 Digilent Pmod™ Connectors 14
5.3.2 Arduino™ Connector 16
5.4 Miscellaneous 18
5.4.1 User and Power LEDs 18
5.4.2 User and Reset Switches 19
5.4.3 MCU Boot Mode 20
5.4.4 MCU Clocks 20

6. MCU Native Pin Access 20
6.1 Breakout Pin Headers 21
6.2 MCU Current Measurement 21

7. Recommended Parts 22

8. Certifications 23
8.1 EMC/EMI Standards 23
8.2 Material Selection, Waste, Recycling and Disposal Standards 23
8.3 Safety Standards 23
9. Design and Manufacturing Information 24
10. Website and Support 24
Revision History 25

Figures

Figure 1. FPB-RA6E2 Board Top Side 5
Figure 2. FPB-RA6E2 Board Bottom Side 5
Figure 3. FPB-RA6E2 Board 7
Figure 4. FPB-RA6E2 Board Block Diagram 8
Figure 5. Copper Jumpers 9
Figure 6. Power Supply Options 11
Figure 7. FPB-RA6E2 Debug Interface 12
Figure 8. e^2 Studio Debugger Settings 13
Figure 9. Pmod 1 Connector 15
Figure 10. Pmod 1 Solder Bridge and Trace Cut Jumpers 15
Figure 11. Pmod 2 Connector 16
Figure 12. Pmod 2 Solder Bridge and Trace Cut Jumpers 16
Figure 13. Arduino Uno Connectors 18
Figure 14. User LEDs 18
Figure 15. Power LED 19
Figure 16. Debug LED 19
Figure 17. Reset (S2) and User Switch (S1) 19
Figure 18. Boot Mode Jumper (J7) 20
Figure 19. Native Pin Access J3 and J4 20
Figure 20. RA +3.3 V Current Measurement Circuit 21
Figure 21. RA MCU +3.3 V Current Measurement Point (J9) and R94 21

Tables

Table 1. List of Abbreviations and Acronyms 3
Table 2. Kit Architecture 8
Table 3. Default Jumper Settings 9
Table 4. Debug USB Connector 12
Table 5. Debug Link Settings 13
Table 6. Pmod 1 Connector 14

Table 7. Pmod 2 Connector 15
Table 8. Arduino Uno Connections 16
Table 9. FPB-RA6E2 Board LED Functions 18
Table 10. FPB-RA6E2 Board Switches 19
Table 11. Part Numbers 22
Table 12. FPB-RA6E2 Board Design Package Contents 24

Glossary

Table 1. List of Abbreviations and Acronyms

BoM	Bill of Materials
ETM	Embedded Trace Module
FPB	Fast Prototyping Board
FSP	Flexible Software Package
GPIO	General Purpose Input Output
I^2C (or IIC)	Inter-Integrated Circuit
I3C	Improved Inter-Integrated Circuit
IDE	Integrated Development Environment
I/O	Input/Output
IRQ	Interrupt Request
LDO	Low Dropout
LED	Light Emitting Diode
LQFP	Low-profile Quad Flat Pack
MCU	Micro Controller Unit
MISO	Master In Slave Out
MOSI	Master Out Slave In
NC	Not Connected
Pmod™	Peripheral Module
PWM	Pulse Width Modulation
RXD	Receive Data
SCI	Serial Communications Interface
SCL	Serial Clock Line
SDA	Serial Data Line
SMD	Surface Mount Device
SPI	Serial Peripheral Interface
SRAM	Static Random Access Memory
SWD	Serial Wire Debug
TXD	Transmit Data
UART	Universal Asynchronous Receiver-Transmitter
USB	Universal Serial Bus

1. Board Overview

The FPB-RA6E2, a Fast Prototyping Board for the RA6E2 MCU Group, enables users to seamlessly evaluate the features of the RA6E2 MCU group and develop embedded systems applications using Flexible Software Package (FSP) and the e^2 studio IDE. Users can use on-board features along with their choice of popular ecosystems add-ons to bring their big ideas to life.

The key features of the FPB-RA6E2 board are categorized in two groups (consistent with the architecture of the board) as follows:

MCU Native Pin Access

- R7FA6E2BB3CFM MCU (referred to as RA MCU)
- 200 MHz, Arm® Cortex®-M33 core
- 256 kB Code Flash, 4 KB Data Flash, 40 kB SRAM
- 64-pin, LQFP package
- Native pin access through 2 x 32-pin male headers (not fitted)
- MCU current measurement point for precision current consumption measurement
- Multiple clock sources - Low-precision (~1%) clocks are available internal to the RA MCU. RA MCU oscillator and sub-clock oscillator crystals, providing precision 24.000 MHz (not fitted) and 32,768 Hz reference clocks are also available

System Control and Ecosystem Access

- USB Full Speed Device (micro-AB connector)
- Two 5 V input sources
  - USB (Debug, Full Speed)
  - External power supply (using 2-pin header) (not fitted)
- On-board debugger (SWD)
- User LEDs and buttons
  - Two User LEDs (green)
  - Power LED (green) indicating availability of regulated power
  - Debug/power LED (yellow) indicating power and the debug connection
  - One User button
  - One Reset button
- Two popular ecosystem expansions
  - Two Digilent Pmod™ (SPI, UART and I3C) connectors
  - Arduino™ (Uno R3) connectors
- MCU boot configuration jumper (not fitted)

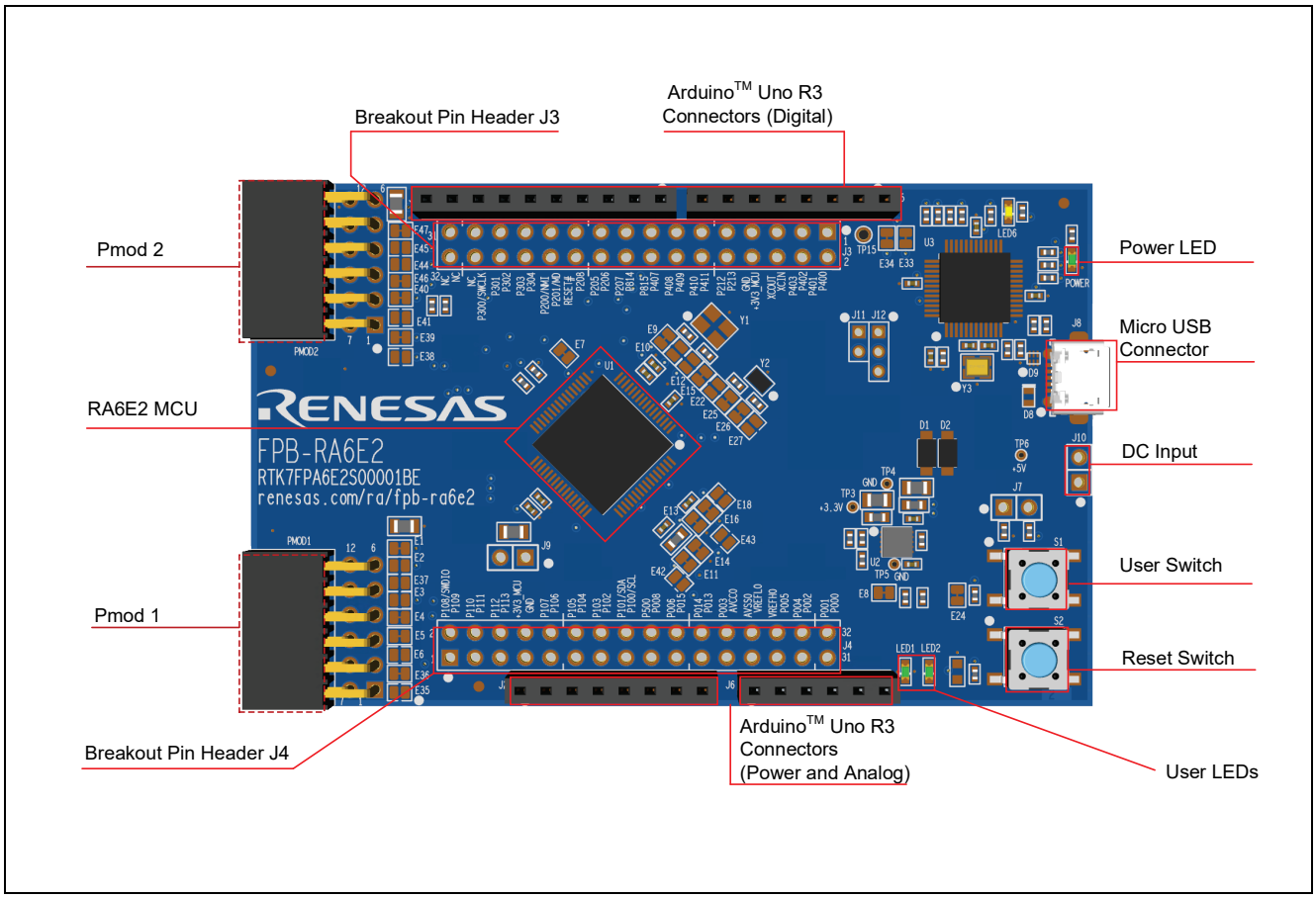

Figure 1. FPB-RA6E2 Board Top Side

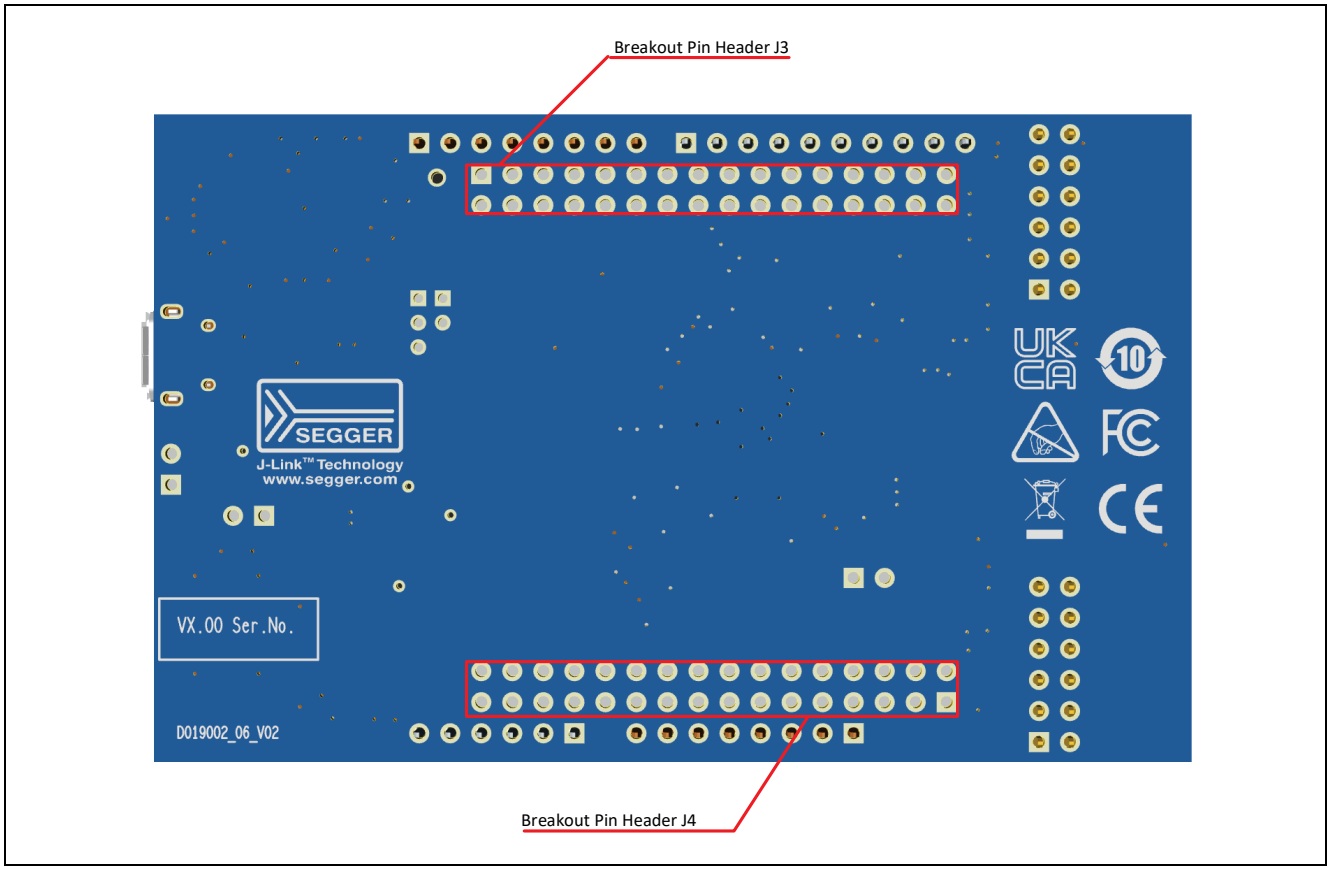

Figure 2. FPB-RA6E2 Board Bottom Side

1.1 Assumptions and Advisory Notes

1. It is assumed that the user has a basic understanding of microcontrollers and embedded systems hardware.
2. It is recommended that the user refers to the *FPB-RA6E2 Quick Start Guide* to get acquainted with the board.
3. Flexible Software Package (FSP) and Integrated Development Environment (IDE) such as e^2 studio are required to develop embedded applications on FPB-RA6E2 board.
4. Instructions to download and install software, import example projects, build them and program the FPB-RA6E2 board are provided in the tutorial manual.
5. The MCU fitted to the FPB-RA6E2 board may not contain the latest version of the on-chip boot firmware.

2. Box Contents

The following components are included in the box:

1. FPB-RA6E2 v1 board
2. Printed Quick Start Guide
3. China RoHS document

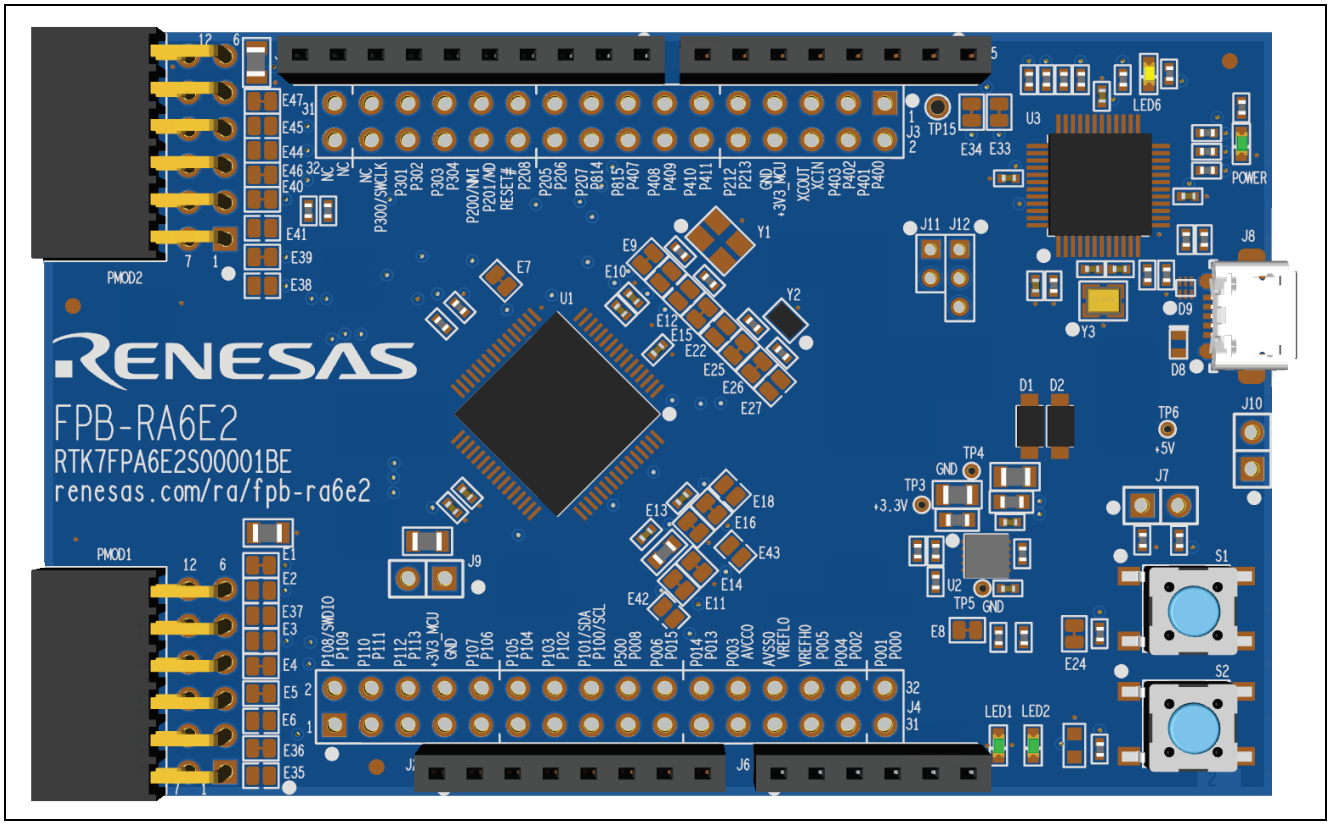

Figure 3. FPB-RA6E2 Board

3. Ordering Information

- FPB-RA6E2 v1 orderable part number: RTK7FPA6E2S00001BE

  Note: The underlined character in the orderable part number represents the kit version.

- FPB-RA6E2 board dimensions: 53 mm (width) x 85 mm (length)

4. Hardware Architecture and Default Configuration

4.1 Board Architecture

The FPB-RA6E2 board is designed with an architecture similar to other boards in the FPB series. Alongside the MCU there is an on-board programmer, pin headers for access to all the pins on the MCU, a power supply regulator, some LEDs and switches, and several ecosystem I/O connectors (Pmod and Arduino).

Table 2. Kit Architecture

Board Functionality	Features	Function present on all similar boards	Functionality is:
MCU Native Pin Access	RA MCU, breakout pin headers for all MCU I/O and power, current measurement	Yes	MCU dependent
System Control and Ecosystem Access	Power, debugger, user LEDs and switches, reset switch, ecosystem connectors, boot configuration	Yes	Same or similar across other FPB boards

4.2 Block Diagram

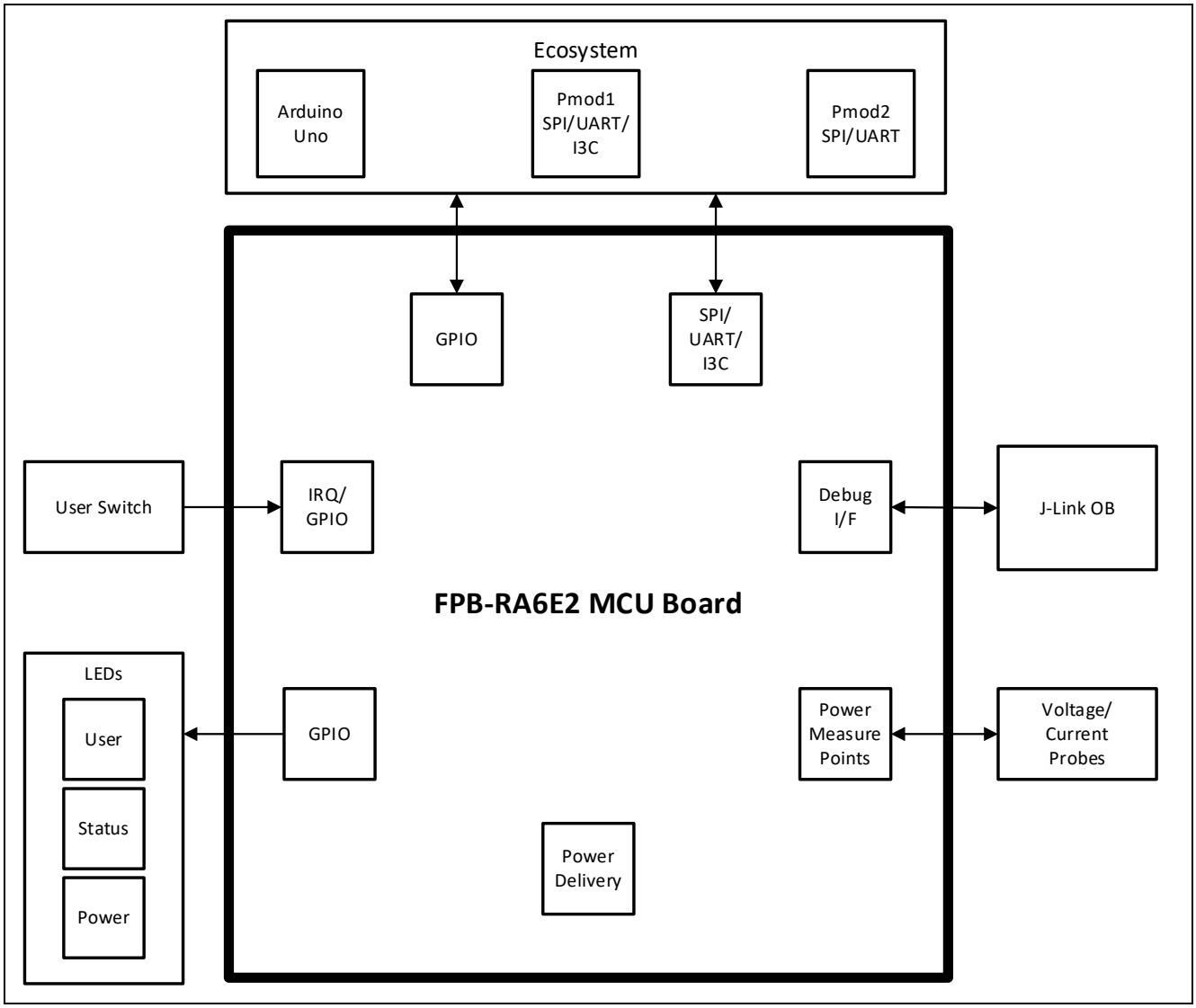

Figure 4. FPB-RA6E2 Board Block Diagram

4.3 Jumper Settings

Two types of jumpers are provided on the FPB-RA6E2 board.

1. Copper jumpers (trace-cut type and solder bridge type)
2. Traditional pin header jumpers

The following sections describe each type and their default configuration.

4.3.1 Copper Jumpers

Copper jumpers are of two types, designated **trace-cut** and **solder-bridge**.

A **trace-cut jumper** is provided with a narrow copper trace connecting its pads. The silk screen overlay printing around a trace-cut jumper is a solid box. To isolate the pads, cut the trace between pads adjacent to each pad, then remove the connecting copper foil either mechanically or with the assistance of heat. Once the etched copper trace is removed, the trace-cut jumper is turned into a solder-bridge jumper for any later changes.

A **solder-bridge** jumper is provided with two isolated pads that may be joined together by one of three methods:

- Solder may be applied to both pads to develop a bulge on each and the bulges joined by touching a soldering iron across the two pads.
- A small wire may be placed across the two pads and soldered in place.
- A SMD resistor, size 0805, 0603, or 0402, may be placed across the two pads and soldered in place. A zero-ohm resistor shorts the pads together.

For any copper jumper, the connection is considered **closed** if there is an electrical connection between the pads (default for trace-cut jumpers.) The connection is considered **open** if there is no electrical connection between the pads (default for the solder-bridge jumpers).

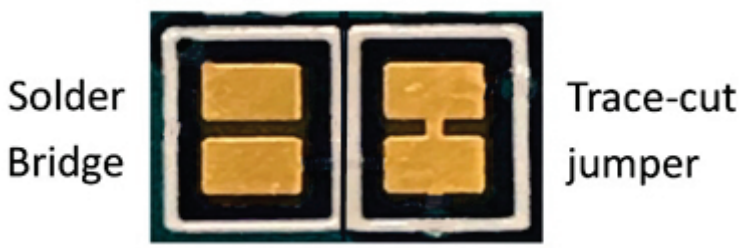

Figure 5. Copper Jumpers

4.3.2 Traditional Pin Header Jumpers

These jumpers are traditional small pitch jumpers that require an external shunt to open/close them. The traditional pin jumpers on the FPB-RA6E2 board are 0.1” (2.54 mm) pitch headers and require compatible 2.54 mm shunt jumpers.

4.3.3 Default Jumper Configuration

The following table describes the default settings for each jumper on the FPB-RA6E2 board. This includes copper jumpers (Ex designation) and traditional pin jumpers (Jx designation).

The circuit group for each jumper is the designation found in the board schematic (available in the Design Package). Functional details for many of the listed jumpers may be found in sections associated with each functional area of the kits.

Table 3. Default Jumper Settings

Location	Circuit Group	Default Open/Closed	Function
E1	Pmod1 Power	Closed	Connects +3.3 V to Pmod 1 pin 6 and pin 12
E2	Pmod1 Power	Open	Connects +5.0 V to Pmod 1 pin 6 and pin 12
E3	Pmod1 SPI	Open	Connects P111 (RSPCKA) to Pmod 1 pin 4
E4	Pmod1 I3C	Closed	Connects P101 (I3C_SDA0) to Pmod 1 pin 4

Location	Circuit Group	Default Open/Closed	Function
E5	Pmod1 I3C	Closed	Connects P100 (I3C_SCL0) to Pmod 1 pin 3
E6	Pmod1 SPI	Open	Connects P110 (MISOA/RxD9) to Pmod 1 pin 3
E7	LED2	Closed	Connects LED2 to P206
E8	LED1	Closed	Connects LED1 to P207
E9	MCU Clock	Closed	Connects J3 pin 10 to MCU pin 10 (P212/EXTAL)
E10	MCU Clock	Open	Connects 24MHz crystal to MCU pin 10 (P212/EXTAL)
E11	MCU Power	Closed	Connects AVCC0 (J4 pin 24) to +3.3 V
E12	MCU Clock	Open	Connects 24MHz crystal to MCU pin 9 (P213/XTAL)
E13	MCU Power	Closed	Connects VREFL0 (J4 pin 26) to GND
E14	MCU Power	Closed	Connects AVSS0 (J4 pin 25) to GND
E15	MCU Clock	Closed	Connects J3 pin 9 to MCU pin 9 (P213/XTAL)
E16	MCU Power	Closed	Connects VREFH0 (J4 pin 27) to +3.3 V
E18	MCU Power	Open	Connects ARDUINO_AREF to +3.3 V
E22	MCU Clock	Open	Connects J3 pin 6 to MCU pin 7 (XCOUT)
E24	Switch S1	Closed	Connects User Switch 1 to MCU P304
E25	MCU Clock	Closed	Connects 32.768KHz crystal to MCU pin 7 (XCOUT)
E26	MCU Clock	Closed	Connects 32.768KHz crystal to MCU pin 6 (XCIN)
E27	MCU Clock	Open	Connects J3 pin 5 to MCU pin 6 (XCIN)
E33	Debugger	Closed	Connects P109/TDO to Debugger P100
E34	Debugger	Closed	Connects P201/MD to P300/SWCLK
E35	Pmod1 UART	Open	Connects P303 (CTS9) to Pmod 1 pin 1
E36	Pmod1 SPI	Closed	Connects P301 (SSLA0) to Pmod 1 pin 1
E37	Pmod1 UART	Open	Connects P301 (RTS9) to Pmod 1 pin 4
E38	Pmod2 UART	Open	Connects P302 (CTS0) to Pmod 2 pin 1
E39	Pmod2 SPI	Closed	Connects P103 (SSLB0) to Pmod 2 pin 1
E40	Pmod2 SPI	Closed	Connects P102 (SCK0) to Pmod 2 pin 4
E41	Pmod2 UART	Open	Connects P103 (RTS0) to Pmod 2 pin 4
E42	MCU Power	Open	Connects AVCC0 (J4 pin 24) to MCU +3.3 V
E43	MCU Power	Open	Connects VREFH0 (J4 pin 27) to MCU +3.3 V
E44	Pmod2 UART	Open	Connects P213 (TxD0) to Pmod 2 pin 2
E45	Pmod2 UART	Open	Connects P212 (RxD0) to Pmod 2 pin 3
E46	Pmod2 UART	Closed	Connects P411 (TxD0) to Pmod 2 pin 2
E47	Pmod2 UART	Closed	Connects P410 (RxD0) to Pmod 2 pin 3
J7	MCU Boot Mode	Open	Configures the MCU for Single-chip mode
R94	MCU Power	Fitted	Connects +3.3 V to MCU. Remove when testing MCU current draw

5. System Control and Ecosystem Access

The FPB-RA6E2 provides a power supply regulator, an on-board debugger, simple I/O (switches and LEDs), and popular I/O ecosystem connectors. These are all described in detail below.

5.1 Power

The FPB-RA6E2 board is designed for +5 V operation. An on-board Low Dropout (LDO) regulator is used to convert the 5 V supply to a 3.3 V supply. The 3.3 V supply is used to power the RA MCU and other peripheral features.

5.1.1 Power Supply Options

This section describes the different ways in which FPB-RA6E2 board can be powered.

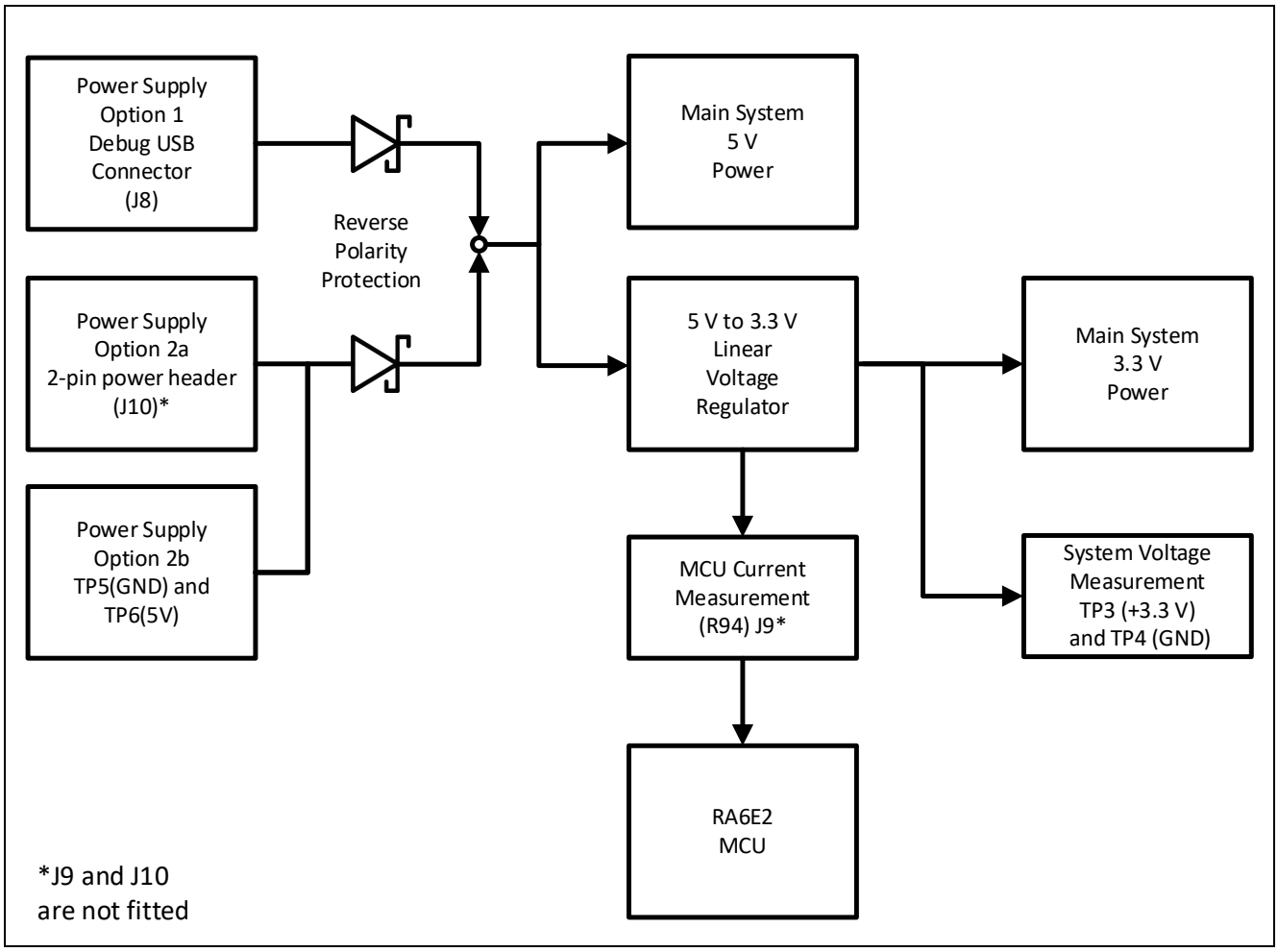

Figure 6. Power Supply Options

The MCU can be operated at a lower voltage than 3.3 V by removing the current measurement resistor and powering the MCU via TP3.

Note: Other changes to the circuit where interfaces or pull-up resistors are used may also need to be removed. Please review the schematic carefully before making these changes.

5.1.1.1 Option 1: Debug USB

5 V may be supplied from an external USB host to the USB debug connector (J8). Power from this source is connected to the main system 5 V power. Reverse current protection is provided between this connector and the main system 5 V power.

5.1.1.2 Option 2: Header Connector J10

5 V may be supplied from an external power supply to test points on the board. TP6 (5 V) and TP5 (GND) are loop-style test points, and J10 provides large via style test points that can accommodate a 0.1” (2.54 mm) pin header or connector. The two types of test points are electrically equivalent, and both are provided for user convenience. Power from this source is connected to the main system 5 V power. Reverse current protection is provided between the 5 V test points and the main system 5 V power.

5.1.2 Power Supply Considerations

The on-board LDO regulator which supplies +3.3 V has a built-in current limit of 2.0 A. Make sure the total current required by the RA MCU, any active on-board features, and any connected peripheral devices does not exceed this limit.

Note: The total current available from a typical USB host is 100 mA before enumeration, and 500 mA maximum. Depending on the configuration of the kit, multiple power sources may be required.

5.1.3 Power-up Behavior

When powered, the green LED next to the POWER legend will illuminate. The yellow DEBUG LED will also illuminate.

5.2 Debug and Trace

The FPB-RA6E2 board can be programmed and debugged using the built-in SEGGER J-Link Emulator On-Board debugger.

5.2.1 On-Board Debug

The on-board debug functionality is provided using Renesas RA4M2 Debug MCU and SEGGER J-Link® firmware.

Debug USB Micro-B connector (J8) connects the RA4M2 Debug MCU to an external USB full speed host, allowing re-programming and debugging of the target RA MCU firmware. This connection is the default debug mode for the FPB-RA6E2 board.

The RA4M2 Debug MCU connects to the target RA MCU using the SWD interface.

Table 4. Debug USB Connector

Debug USB Connector		**FPB-RA6E2**
Pin	**Description**	**Signal/Bus**
J8-1	+5VDC	+5V_USB_DBG
J8-2	Data-	USB_JLOB_DM (U3 pin 14)
J8-3	Data+	USB_JLOB_DP (U3 pin 15)
J8-4	USB ID, jack internal switch, cable inserted	NC
J8-5	Ground	GND

A yellow indicator(LED6), DEBUG LED, shows the visual status of the debug interface. When the FPB-RA6E2 board is powered on, and the DEBUG LED is blinking, it indicates that the RA4M2 Debug MCU is not connected to a programming host. When the DEBUG LED is on solid, it indicates that it is connected to a programming interface. When the DEBUG LED is flickering, it indicates that data is being transferred between the RA4M2 Debug MCU and the programming host.

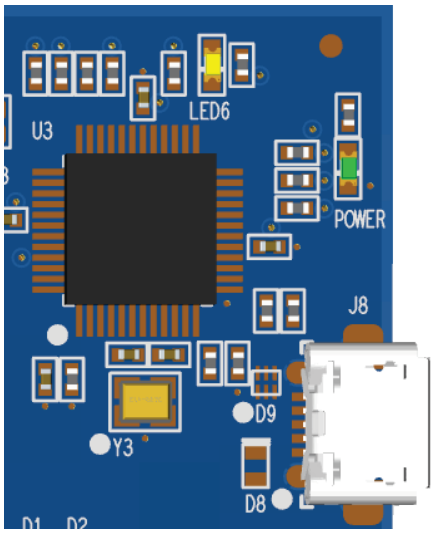

Figure 7. FPB-RA6E2 Debug Interface

5.2.1.1 Debugger Link Settings

Table 5. Debug Link Settings

Link	Setting	Function
E34	Closed	Normal debugger operation
	Open	P201/MD and P300/SWCLK are not connected

5.2.2 Debugger Settings in e² studio

Figure 8 shows the settings for e² studio when creating a new project for the FPB-RA6E2 Fast Prototyping Board.

[Debug hardware]: Select [J-Link (ARM)]

[Target Device]: Select [R7FA6E2BB]

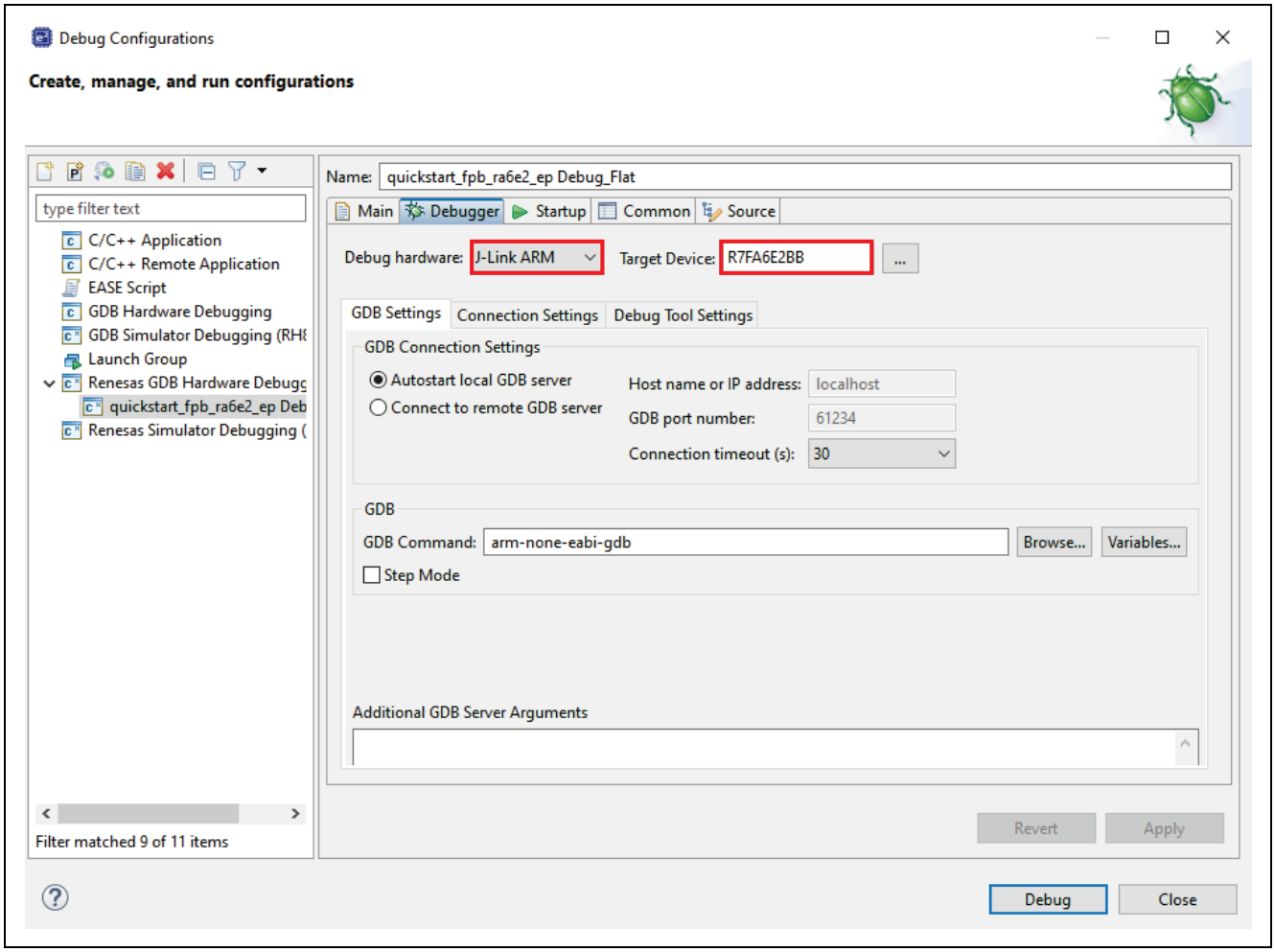

Figure 8. e² Studio Debugger Settings

5.3 Ecosystem

The Ecosystem connectors provide users the option to simultaneously connect several third-party add-on modules compatible with two popular ecosystems using the following connectors:

1. Two Digilent Pmod™ (SPI ,UART and I3C) connectors
2. Arduino™ (Uno R3) connectors

5.3.1 Digilent Pmod™ Connectors

Two 12-pin connectors are provided to support Pmod modules where the RA MCU acts as the master, and the connected module acts as a slave device.

These interfaces may be configured in firmware to support several Pmod types such as Type-2A (expanded SPI) and Type-3A (expanded UART).

The FPB-RA6E2 board also provides jumpers so the 12-pin connector may alternatively be used for Pmod Type-6A (I3C).

The default 12-pin Pmod interface supports +3.3 V devices. Please ensure that any Pmod device installed is compatible with a +3.3 V supply*.

The Pmod interface may also support +5.0 V devices.

*Please ensure that only 5 V modules with 3V3 interface signals are used when this option is selected.

Note that both Pmods use the SCI peripheral in “Simple SPI” mode, and so do not offer the full functionality of the SPI peripheral. Please see the hardware manual for full details of the SCI “Simple SPI” mode.

5.3.1.1 Pmod 1

A 12-pin right angle connector is fitted at Pmod1. The connections support Pmod Type-2A (expanded SPI) and Type-3A (expanded UART) and Type-6A (I3C). The RA MCU acts as the I3C master, and the connected module acts as an I3C slave device. This interface may additionally be re-configured in firmware as several other Pmod types.

Table 6. Pmod 1 Connector

Pmod1 Connector Default				**FPB-RA6E2**	**Pmod 1 Configuration**	
Pin	**Option Type 2A / 3A**	**Option Type 3A**	**Option Type 6A**	**Signal/Bus**	**Short**	**Open**
PMOD1-1	SS / CTS			P301 (SSLA0/CTS9)	E36	E35, E37
		CTS		P303 (CST9)	E35	E36
PMOD1-2	MOSI / TXD	TXD		P109 (MOSIA/TXD9)		
PMOD1-3	MISO / RXD	RXD		P110 (MISOA/RXD9)	E6	E5
			SCL	P100 (SCL0)	E5	E6
PMOD1-4	SCK			P111 (RSPCKA)	E3	E4, E37
		RTS		P301 (RTS9)	E37	E3, E4, E36
			SDA	P101 (SDA0)	E4	E3, E37
PMOD1-5	GND			GND		
PMOD1-6	VCC			+3.3 V*	E1	E2
				+5.0 V*	E2	E1
PMOD1-7	GPIO			P402 (IRQ4)		
PMOD1-8	GPIO / RESET			P005 (RESET)		
PMOD1-9	GPIO			P107 (GPIO/SSLA2)		
PMOD1-10	GPIO			P106 (GPIO)		
PMOD1-11	GND			GND		
PMOD1-12	VCC			+3.3 V*	E1	E2
				+5.0 V*	E2	E1

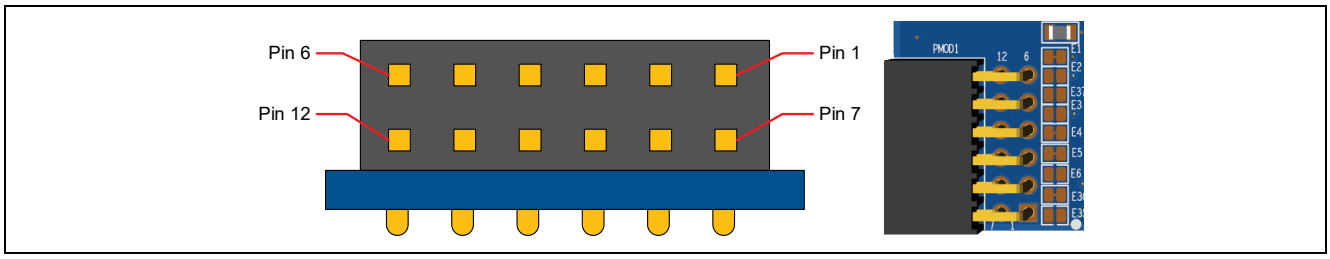

Figure 9. Pmod 1 Connector

Note: Exercise caution while modifying power source trace jumpers, E1 and E2. Permanent damage to the FPB-RA6E2 board and/or connected modules may result.

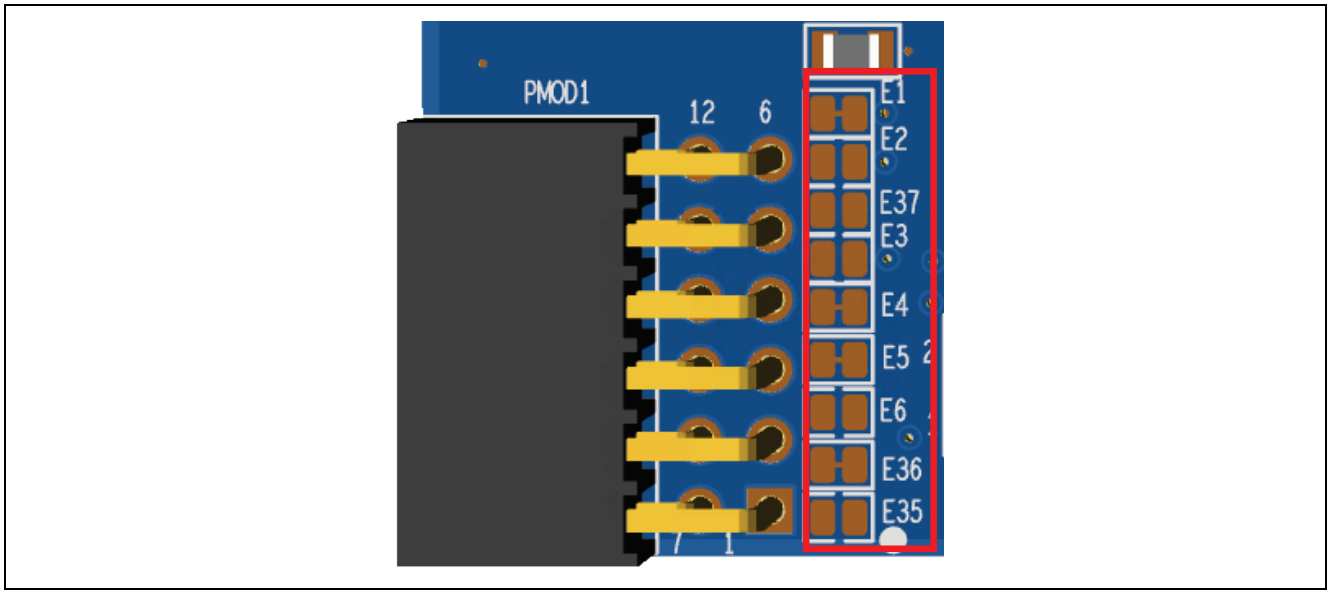

Figure 10. Pmod 1 Solder Bridge and Trace Cut Jumpers

5.3.1.2 Pmod 2

A 12-pin right angle connector is fitted at Pmod 2. The RA MCU acts as the SPI master, and the connected module acts as an SPI slave device. This interface may additionally be re-configured in firmware as several other Pmod types.

This Pmod interface supports +3.3 V devices. Please ensure that any Pmod device installed is compatible with a +3.3 V supply.

Note: P212 and P213 are shared with the external crystal. If an external crystal is used these pins will be unavailable.

Table 7. Pmod 2 Connector

Pmod 2 Connector				**FPB-RA6E2**	**Pmod 2 Configuration**		**External clock Configuration**	
Pin	**Option Type 2A / 3A**	**Option Type 3A**	**Option Type 3A**	**Signal/Bus**	**Short**	**Open**	**Short**	**Open**
PMOD2-1	SS / CTS			P103 (SS0/CTS0)	E39	E38		
		CTS	CTS	P302 (CTS0)	E38	E39		
PMOD2-2	MOSI / TXD	TXD		P411 (MOSI0/TXD0)	E46	E44		
			TXD	P213 (TXD0)	E44	E46	E15	E12
PMOD2-3	MISO / RXD	RXD		P410 (MISO0/RXD0)	E47	E45		
			RXD	P212 (RXD0)	E45	E47	E9	E10
PMOD2-4	SCK			P102 (SCK0)	E40	E41		
		RTS	RTS	P103 (RTS0)	E41	E40, E39		
PMOD2-5	GND			GND				

Pmod 2 Connector				FPB-RA6E2	Pmod 2 Configuration		External clock Configuration	
PMOD2-6	VCC			+3.3 V				
PMOD2-7	GPIO			P205 (IRQ1)				
PMOD2-8	GPIO / RESET			P407 (RESET)				
PMOD2-9	GPIO			P015				
PMOD2-10	GPIO			P014				
PMOD2-11	GND			GND				
PMOD2-12	VCC			+3.3 V				

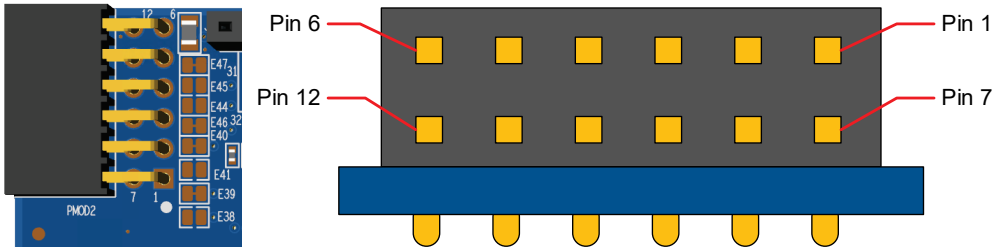

Figure 11. Pmod 2 Connector

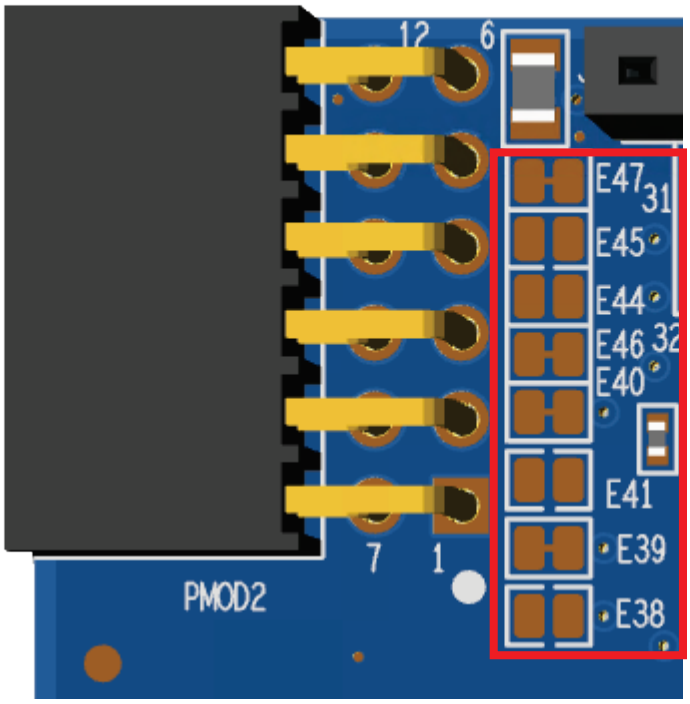

Figure 12. Pmod 2 Solder Bridge and Trace Cut Jumpers

5.3.2 Arduino™ Connector

An Arduino Uno R3 compatible connector interface is provided.

Table 8. Arduino Uno Connections

Arduino Compatible Connector		FPB-RA6E2
Pin	**Description**	**Signal/Bus**
J2-1	NC	NC
J2-2	IOREF	+3.3 V
J2-3	RESET	P208

Arduino Compatible Connector		FPB-RA6E2
Pin	**Description**	**Signal/Bus**
J2-4	3.3 V	+3.3 V
J2-5	5 V	+5 V
J2-6	GND	GND
J2-7	GND	GND
J2-8	VIN	NC
J6-1	A0	P000 (AN000)
J6-2	A1	P001 (AN001)
J6-3	A2	P002 (AN002)
J6-4	A3	P004 (AN004)
J6-5	A4	P003 (AN007)
J6-6	A5	P013 (AN011)
J5-1	D0 / RXD	P410 (GPIO/RXD0)
J5-2	D1 / TXD	P411 (GPIO/TXD0)
J5-3	D2 / INT0	P105 (GPIO/IRQ0)
J5-4	D3 / INT1 / PWM	P408 (GPIO/IRQ7/GTIOC1B)
J5-5	D4	P500 (GPIO)
J5-6	D5 / PWM	P409 (GPIO/GTIOC1A)
J5-7	D6 / PWM	P113 (GPIO/GTIOC2A)
J5-8	D7	P008 (GPIO)
J1-1	D8	P006 (GPIO)
J1-2	D9 / PWM	P403 (GPIO/GTIOC3A)
J1-3	D10 / SS / PWM	P301 (GPIO/SSLA0/GTIOC4B)
J1-4	D11 / MOSI / PWM	P109 (GPIO/MOSIAGTIOC1A)
J1-5	D12 / MISO / PWM	P110 (GPIO/MISOA/GTIOC1B)
J1-6	D13 / SCK	P111 (GPIO/RSPCKA)
J1-7	GND	GND
J1-8	AREF	ARDUINO/VREFH0
J1-9	I3C_SDA	P101 (I3C_SDA0)
J1-10	I3C_SCL	P100 (I3C_SCL0)

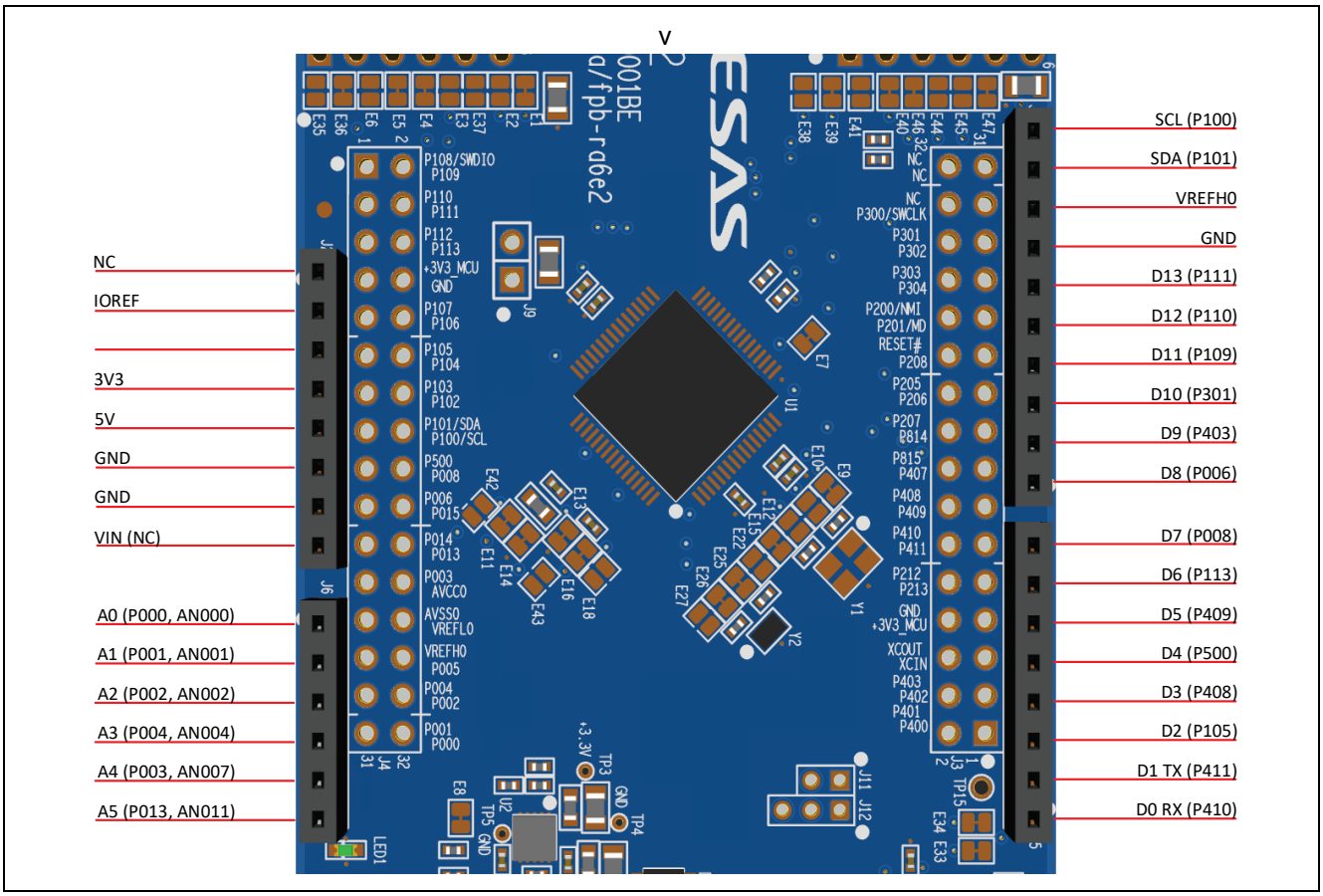

Figure 13. Arduino Uno Connectors

5.4 Miscellaneous

5.4.1 User and Power LEDs

Four LEDs are provided on the FPB-RA6E2 board.

Behavior of the LEDs on the FPB-RA6E2 board is described in the following table.

Table 9. FPB-RA6E2 Board LED Functions

Designator	Color	Function	MCU Control Port
LED1	Green	User LED	P207
LED2	Green	User LED	P206
POWER	Green	Power on indicator	+3.3 V
LED6	Yellow	Debug LED	Renesas RA4M2 Debug MCU

The User LEDs may be isolated from the main MCU so that the associated ports can be used for other purposes. To disconnect LED1 from P207, trace cut jumper E8 must be open. To disconnect LED2 from P206, trace cut jumper E7 must be open.

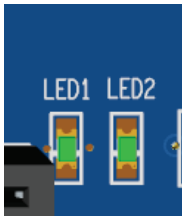

Figure 14. User LEDs

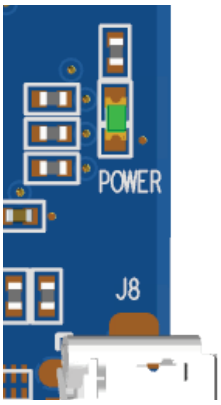

Figure 15. Power LED

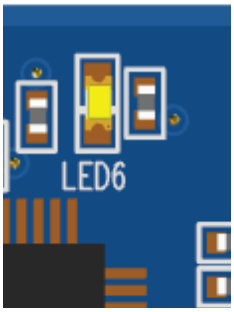

Figure 16. Debug LED

5.4.2 User and Reset Switches

Two miniature, momentary, mechanical push-button type SMD switches are mounted on the FPB-RA6E2 board.

Pressing the reset switch (S2) generates a reset signal to restart the RA MCU.

Table 10. FPB-RA6E2 Board Switches

Designator	Function	MCU Control Port
S1	User Switch	P304 (IRQ9)
S2	MCU Reset Switch	RESET#

The User Switch S1 may be isolated from the MCU, so that the associated port can be used for other purposes. To disconnect S1 from P304, trace cut jumper E24 must be open.

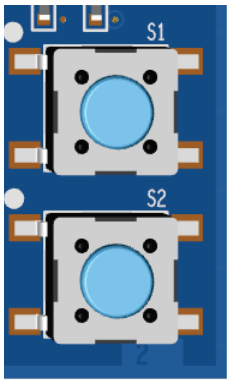

Figure 17. Reset (S2) and User Switch (S1)

5.4.3 MCU Boot Mode

A two-pin header (J7) can be fitted to select the boot mode (P201) of the RA MCU. For normal operation (single-chip mode), leave J7 open. To enable SCI boot mode, place a jumper on J7.

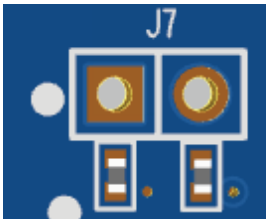

Figure 18. Boot Mode Jumper (J7)

5.4.4 MCU Clocks

The board is fitted with a RA MCU sub-clock oscillator crystal, providing a precision 32,768 Hz reference clock. The option has also been provided to fit an RA MCU oscillator crystal, providing a precision 24.000 MHz reference clock. A recommended part is the Diodes Incorporated FL2400022.

6. MCU Native Pin Access

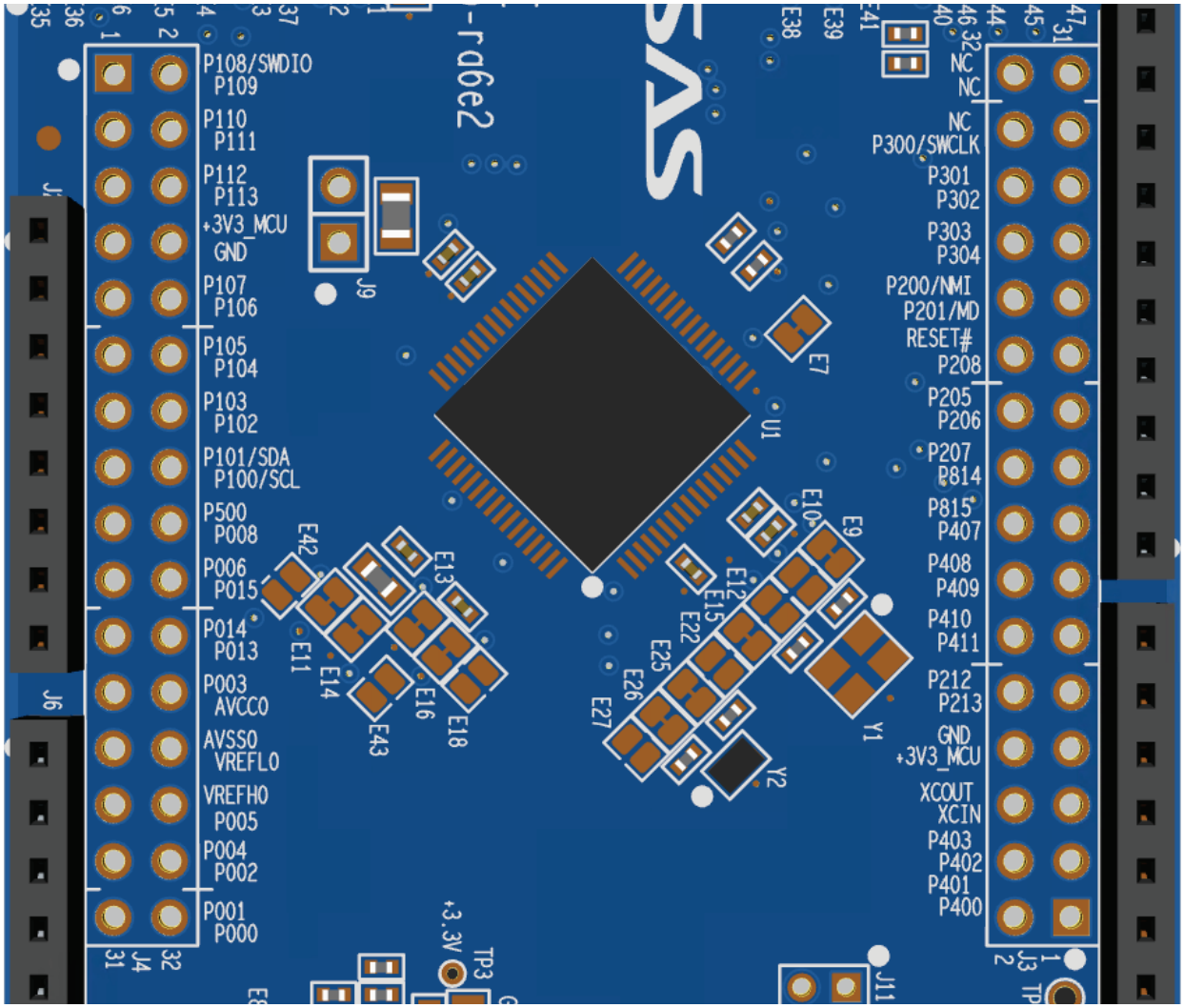

Figure 19. Native Pin Access J3 and J4

6.1 Breakout Pin Headers

The FPB-RA6E2 board pin headers (not fitted), J3 and J4, provide access to all RA MCU interface signals, and to voltages for all RA MCU power ports. Each header pin is labelled with the voltage or port connected to that pin. Refer to the RA6E2 MCU Group User's Manual for details of each port function, and the FPB-RA6E2 board schematic for pin header port assignments.

The placement of the breakout pin headers allows for a standard 2.54 mm (0.100") center breadboard to be placed on both pin headers simultaneously. This can be used for prototyping and testing of custom circuitry for use with the RA6E2 MCU.

6.2 MCU Current Measurement

Included near the RA MCU is resistor R94 and test connector J9 (not fitted) to measure the MCU core current.

Resistor R94 is 0 Ω (SMD 0805) as supplied. It should be removed in order to measure the current consumption using an ammeter connected between J9 pins 1 and 2.

Alternatively, it could be removed and replaced with a suitable low value resistor (such as 100 mΩ), and then a voltmeter used to measure the voltage between J9 pins 1 and 2. The current drawn by the MCU can then be calculated using Ohm's Law.

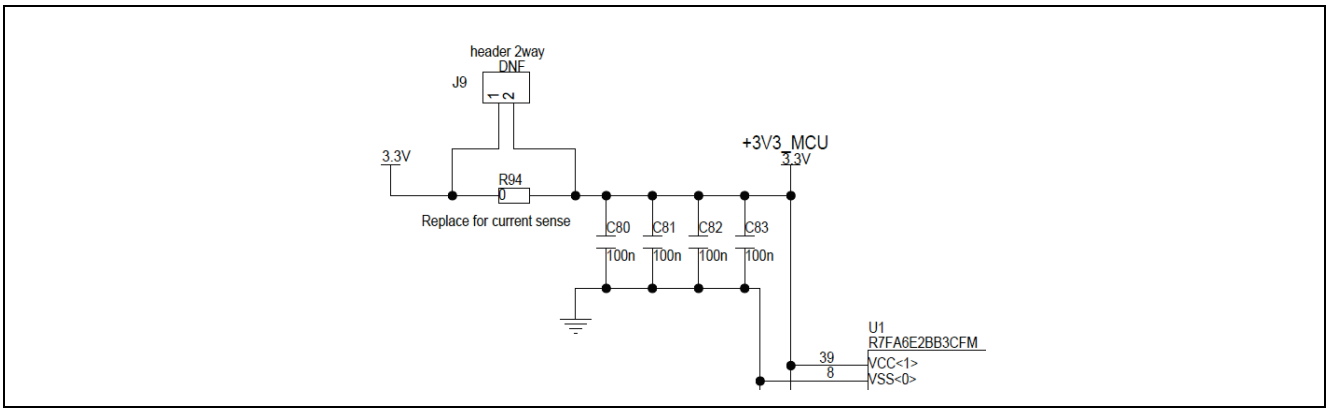

Figure 20. RA +3.3 V Current Measurement Circuit

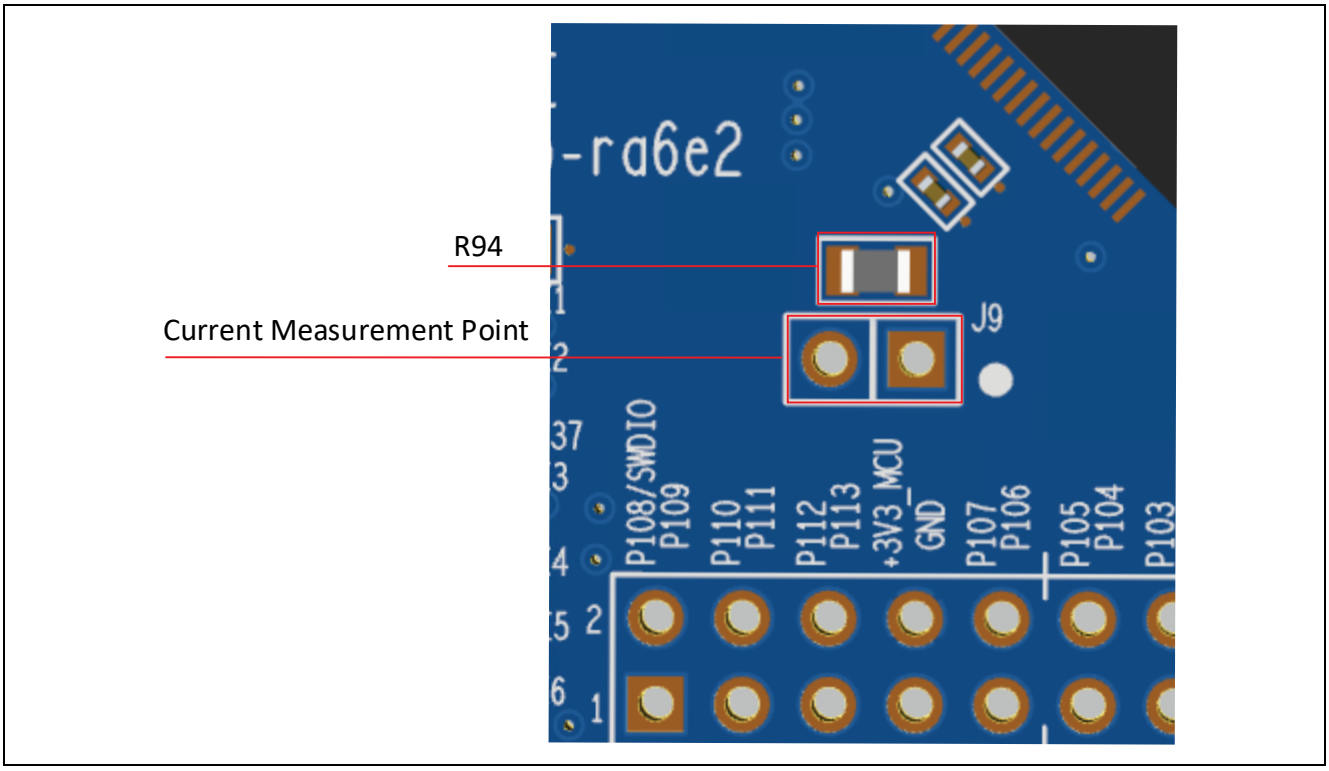

Figure 21. RA MCU +3.3 V Current Measurement Point (J9) and R94

7. Recommended Parts

Table 11 lists recommended part numbers for optional components that can be fitted as required.

Table 11. Part Numbers

Designator(s)	Description	Manufacturer	Part Number
Y1	24 MHz Crystal	Diodes Incorporated	FL2400022
J3, J4	50-way male header	Würth Elektronik	613 032 211 21
J7, J9, J10	2-way male header	Würth Elektronik	613 002 111 21

8. Certifications

The FPB-RA6E2 v1 board meets the following certifications/standards. See page 4 of this user's manual for the disclaimer and precautions.

8.1 EMC/EMI Standards

- FCC Notice (Class A)

  This device complies with part 15 of the FCC Rules. Operation is subject to the following two conditions: (1) This device may not cause harmful interference, and (2) this device must accept any interference received, including interference that may cause undesired operation.

  NOTE- This equipment has been tested and found to comply with the limits for a Class A digital device, pursuant to Part 15 of the FCC Rules. These limits are designed to provide reasonable protection against harmful interference in a residential installation. This equipment generates, uses and can radiate radio frequency energy and, if not installed and used in accordance with the instructions, may cause harmful interference to radio communications. However, there is no guarantee that interference will not occur in a particular installation. If this equipment does cause harmful interference to radio or television reception, which can be determined by turning the equipment off and on, the user is encouraged to try to correct the interference by one or more of the following measures:

  — Reorient or relocate the receiving antenna.
  — Increase the separation between the equipment and receiver.
  — Connect the equipment into an outlet on a circuit different from that to which the receiver is connected.
  — Consult the dealer or an experienced radio/television technician for help.

- Innovation, Science and Economic Development Canada ICES-003 Compliance:
  CAN ICES-3 (A)/NMB-3(A)
- CE Class A (EMC)

  This product is herewith confirmed to comply with the requirements set out in the Council Directives on the Approximation of the laws of the Member States relating to Electromagnetic Compatibility Directive 2014/30/EU.

  Warning – This is a Class A product. In a domestic environment this product may cause radio interference in which case the user may be required to take adequate measures to correct this interference.

- UKCA Class A (EMC)

  This product is in conformity with the following relevant UK Statutory Instrument(s) (and its amendments): 2016 No. 1091 Electromagnetic Compatibility Regulations 2016.

  Warning – This is a Class A product. In a domestic environment this product may cause radio interference in which case the user may be requried to take adequate measures to correct this interference.

- Taiwan: Chinese National Standard 13438, C6357 compliance, Class A limits
- Australia/New Zealand AS/NZS CISPR 32:2015, Class A

8.2 Material Selection, Waste, Recycling and Disposal Standards

- EU RoHS
- China SJ/T 113642014, 10-year environmental protection use period.

8.3 Safety Standards

- UL 94V-0

9. Design and Manufacturing Information

The design and manufacturing information for the FPB-RA6E2 v1 kit is available in the "FPB-RA6E2 v1 Design Package" available on renesas.com/ra/fpb-ra6e2.

- Design package file name: fpb-ra6e2-v1-designpackage.zip
- Design package contents

Table 12. FPB-RA6E2 Board Design Package Contents

File Type	Content	File/Folder Name
File (PDF)	Schematics	fpb-ra6e2-v1-schematics
File (PDF)	Mechanical Drawing	fpb-ra6e2-v1-mechdwg
File (PDF)	3D Drawing	fpb-ra6e2-v1-3d
File (PDF)	BoM	fpb-ra6e2-v1-bom
Folder	Manufacturing Files	Manufacturing Files
Folder	Design Files	Design Files-Cadence Allegro

10. Website and Support

Visit the following URLs to learn about the kit and the RA family of microcontrollers, download tools and documentation, and get support.

FPB-RA6E2 Resources	renesas.com/ra/fpb-ra6e2
RA Product Information	renesas.com/ra
RA Product Support Forum	renesas.com/ra/forum
RA Videos	renesas.com/ra/videos
RA Kit Feedback and Feature Request	renesas.com/ra/kitfeedback
Renesas Support	renesas.com/support

Provide Feedback/Request a Feature

Renesas aims to provide the best microcontroller kit experience to help our customers jumpstart innovation and take products to market faster with the RA family of microcontrollers. The Renesas RA microcontroller kits have been designed with a lot of attention to detail and customer-centered thinking in every aspect of the design. Renesas aims to exceed customer expectation.

Renesas looks forward to hearing your feedback and learning how we can enhance your experience. Please share your feedback at renesas.com/ra/kitfeedback.

Revision History

Rev.	Date	Description	
		Page	Summary
1.00	Jun.29.23	—	Initial release

FPB-RA6E2 v1 – User's Manual

Publication Date: Jun.29.23

Published by: Renesas Electronics Corporation

FPB-RA6E2 v1 – User's Manual

Renesas Electronics Corporation

R20UT5161EG0100