RENESAS

V850 platform brochure

Renesas 32-bit Microcontrollers

RENESAS V850

J Series | M Series | F Series | I Series

Renesas Electronics
www.renesas.eu

2012.07

Renesas' V850 microcontrollers (MCUs) are the world's leading 32-bit RISC architecture with solutions for a wide range of products in the automotive, industrial, office, medical, and consumer markets. The entire V850 family covers more than nine series specific for different applications, with each series having several sub-series to support high-end to low-end system designs. Our ongoing R&D ensures that these popular product lines, consisting of hundreds of devices with different combinations of features, memory and packages, continue to expand and improve. This brochure covers the key families ideally suited to industrial applications.

J Series

Low Power, Small Package,
Full Scalable Platform, GP,
USB and Ethernet

M Series

Highest Performance 32-bit MCU
Dedicated to Industrial Automation,
Drives & Servo motor control

F Series

Multiple CAN channels
Full Scalable Platform
High Temperature grades

I Series

High Performance cores,
Enhanced analog & Safety,
3-phase motor control

J Series — Innovative V850ES MCUs Provide Increased Power Efficiency for Portable Applications

Renesas' V850 microcontrollers (MCUs) are the world's leading 32-bit solutions for a wide range of products in the automotive, industrial, office, medical, and consumer markets. The entire V850 family covers more than nine series specific for different applications, with each series having several sub-series to support high-end to low-end system design. Our ongoing R&D ensures that these popular product lines, consisting of hundreds of devices with different combinations of features, memory and packages, continue to expand and improve.

V850ES J Series Combining high-performance processing with low power consumption and small packaging, the V850ES J Series is an ideal MCU platform for creating portable applications.

General Purpose

V850ES/Jx3
62 DMIPS (v2.1)

Max Freq: 32 MHz
Voltage: 2.85 – 3.6 V
Pins: 100 – 144
Flash: 384 KB – 1024 KB
RAM: 32 KB – 60 KB

Ultra-low-power General Purpose

V850ES/Jx3-L
STOP current: 1.5 µA

Max Freq: 20 MHz
DMIPS (v2.1): 38
Voltage: 2.0 V - 3.6 V
Pins: 40 – 128
Flash: 16 KB - 1024 KB
RAM: 8 KB - 80 KB

Low-power and USB

V850ES/Jx3-L
USB Device

Max Freq: 20 MHz
DMIPS (v2.1): 38
Voltage: 2.0 V – 3.6 V
Pins: 100 – 128
Flash: 256 KB – 1024 KB
RAM: 40 KB – 80 KB

USB and Ethernet

V850ES/Jx3-H
81 DMIPS (v2.1), USB Device

Max Freq: 48 MHz
Voltage: 2.85 V – 3.6 V
Pins: 40 – 128
Flash: 16 KB – 512 KB
RAM: 8 KB – 56 KB

V850ES/Jx3-U
81 DMIPS (v2.1), USB Device + Host

Max Freq: 48 MHz
Voltage: 2.85 V – 3.6 V
Pins: 100 – 128
Flash: 384 KB – 512 KB
RAM: 48 KB – 56 KB

V850ES/Jx3-E
84 DMIPS (v2.1), Eth MAC + USB Device

Max Freq: 50 MHz
Voltage: 2.85 V – 3.6 V
Pins: 128 – 144
Flash: 256 KB – 512 KB
RAM: 76 KB – 128 KB

WQFN (0.5 mm Pitch)

- 48 pins, 7 mm
- 40 pins, 6 mm

BGA (0.65 mm/0.5 mm Pitch)

- 121 pins, 8 mm
- 64 pins, 5 mm

0.75 mm

> *Some devices available in extremely small sizes*

Scalable and flexible V850ES J Series product line

This line of microcontrollers, ranging from 40-pin 16 KB to 144-pin 1 MB, provides optimized solutions for meeting different system requirements and cost structures.

Performance: **38 – 84 DMIPS (v2.1)**
Packages: **40 –144 Pins**
Flash Memory: **16 k-1 MB**

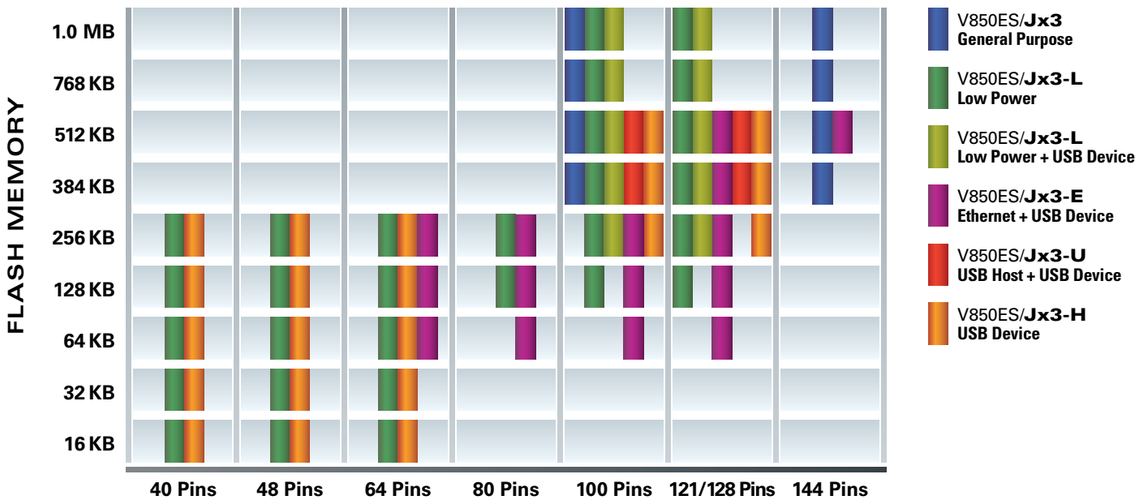

Extensive Array of Peripherals

The V850ES J Series, including the V850ES/JG3-L featured in the block diagram, was designed with a multitude of peripherals to support your design needs.

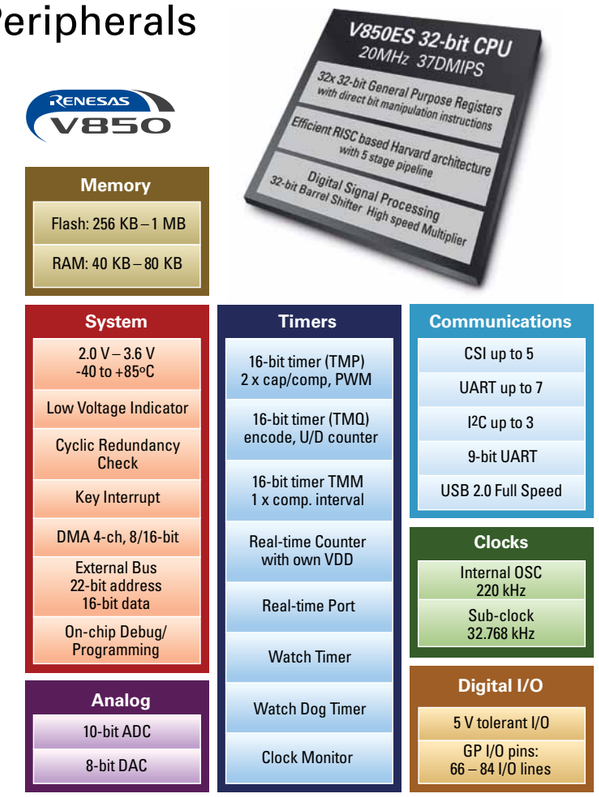

DESIGN FOCUS V850ES/Jx3-L for Portable Applications

Many Renesas customers aim to take advantage of end-users' eagerness for handheld products rather than desktop or portable versions – particularly when the handheld units combine enhanced functionality with increased convenience. To facilitate the design of compact, battery-powered embedded systems, Renesas offers two V850ES/Jx3-L MCU groups, one with USB function and one without it.

With their high performance, low power and compact size, the V850ES/Jx3-L MCUs are just the ticket for portable devices.

Energy-optimized architecture achieves 300 µA/DMIPS

- Flash is turned off during a non-fetch cycle, such as after fetching two 16-bit instructions in one clock cycle
- RAM is optimized for current consumption for byte, half-word and word accesses

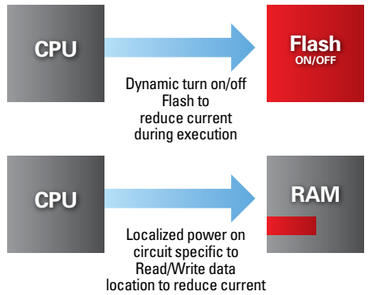

Exceptionally low current consumption

- Low power process technology, combined with energy-optimized architecture, provides exceptionally low current consumption without sacrificing performance

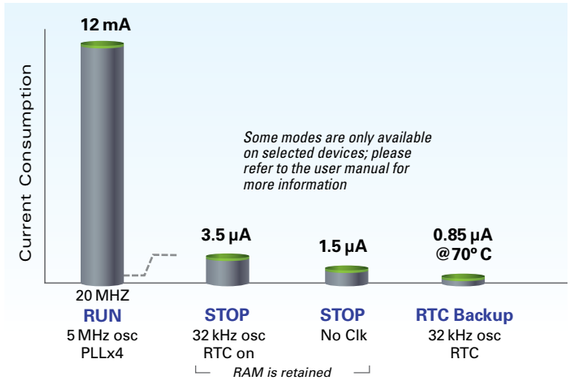

Flexible power-down modes

- Most of the low-power modes retain memory and register, enabling a system to maintain its state during power down while operating. A special mode called RTC Backup only maintains real time during "on-the-shelf" time.

Mode	Condition								
	32 kHz Osc	Main Osc	PLL	CPU	Peripherals		Regulator	Flash	RAM/Register
					RTC	Others			
RUN	ON[2]	ON	ON[2]	ON	ON	ON	ON	ON	Retained
HALT	ON[2]	ON	ON[2]	STOP	ON	ON	ON	ON	Retained
IDLE 1	ON[2]	ON	ON[2]	STOP	STOP[1]	STOP[1]	ON	ON	Retained
IDLE 2	ON[2]	ON	ON[2]	STOP	STOP[1]	STOP[1]	ON	OFF	Retained
STOP	ON[2]	STOP	STOP	STOP	STOP[1]	STOP[1]	Low Power	OFF	Retained
RTC Backup (Jx3-L, with 384 KB or up)	ON	STOP	STOP	STOP	ON	STOP	OFF	OFF	Only RTC Registers

1. RTC and some peripherals such as UART can be left on
2. 32 kHz oscillator can be switched on/off

Enhanced 32-bit Architecture Delivering 1.9 DMIPS/MHz (v2.1)

- Enhanced branch/short load pipe stage reduces latency
- Load/store buffer with data forward stage reduces pipeline stalls
- Performance-oriented instructions
  - Saturated arithmetic operation
  - Single-cycle shift operation
  - Single-cycle bit manipulation operation
  - Single-cycle byte swap accelerate processing

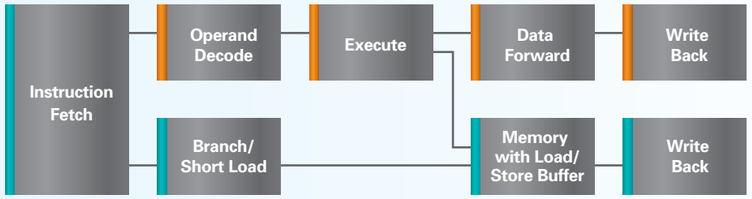

High Reliability Flash with Safety Functions

Highly reliable on-chip Flash

- Up to 1 MB Flash to support increasingly sophisticated software
- Deploying the same high-quality Flash technology used in our automotive microcontrollers
- Transparent ECC automatically corrects 1-bit error without degrading performance

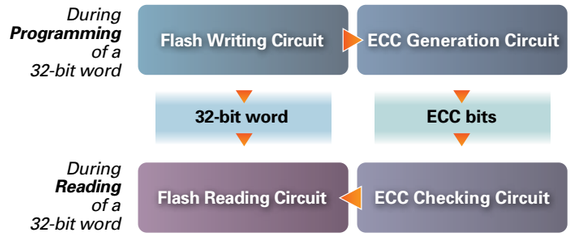

Authenticated Debug and Flash Security protect Software IP

- Built-in debug security to authenticate debugging session
- Additional Flash Security to prohibit READ, WRITE and/or ERASE

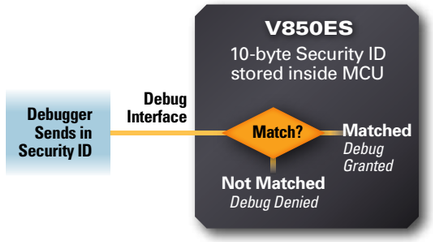

Fail-safe Firmware update with Boot Swap

- Power failure during firmware update could cause unrecoverable system failure
- User can configure Flash for two-boot area
- Update code is not over-written during firmware update
- After checking code, proceed with swap. MCU will see new boot code

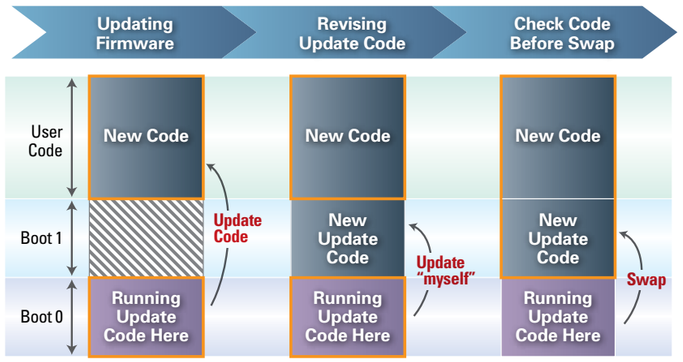

Tools that make product R&D go quickly and smoothly

V850ES/Jx3-L Low Power Demonstrator

Test out the low-power capabilities of the V850ES/Jx3-L. Provides support for current measurement during various operation modes. A PC GUI SW controls the different operations and graphs out data from an on-board temperature and humidity sensor.

Renesas Starter Kits

Renesas Starter Kits provide a convenient way to evaluate the V850ES microcontroller. It is bundled with a MiniCube2 and packaged with an evaluation version of CubeSuite and sample software.

Order code: EB-V850ES/JG3L-EE
Order code: V850ES-H-PLUGIT
Order code: V850ES-U-PLUGIT
Order code: V850ES-NETWORKIT

MiniCube2 Target boards	MiniCube2 Debugger	MiniCube Debugger	IE Cube In-Circuit Emulator	PG-FP5 Flash Programmer
QB-V850ESJG3L-TB QB-V850ESJG3U-TB* (*supports Jx3-U, Jx3-H) QB-V850ESJJ3-TB	Ultra low cost; requires no dedicated pins because it shares the debug interface with a serial port. This debugging method requires a small software monitor code. QB-MINI2-EE	Non-invasive debugging; uses dedicated pin to debug the microcontroller. Does not require any software monitor code. QB-V850MINIL-EE	IE Cube is a sophisticated, full function in-circuit emulator with real-time trace and other advanced functions that are required in real-time debugging. QB-V850ESJX3L-ZZZ-EE QB-V850ESJX3H-ZZZ-EE* (*supports Jx3-U) QB-V850ESJX3E-ZZZ-EE QB-V850ESSX2-ZZZ-EE** (**supports Jx3-E)	Supports programming without a PC, stores several binary files, and can program multiple devices simultaneously. PG-FP5

Direct third-party support for V850ES J Series MCUs

The V850ES ecosystem includes many products and services from third-party vendors, complementing the system development tools Renesas provides. This ecosystem also encompasses long-term support programs.

RTOS and Middleware

Micriμm
μC/OS-II
www.micrium.com

SEGGER
embOS RTOS
www.segger.com

freeRTOS
freeRTOS is available at
www.freertos.org

CMX SYSTEMS
RTX RTOS support
www.cmx.com

Integrated Development Environment

e²studio Integrated Development Environment based on Eclipse.
Includes free of charge V850 GNU compiler.

Integrated Development Environment

IAR SYSTEMS
IDE with optimizing C/C++ compiler and C-Spy debugging from IAR Systems
www.iar.com/ewV850

V850ES J Series

Core	Device: Nickname	Device: Part Number	Memory: Size [KB]	Memory: RAM [Byte]	Interfaces: I/O /Pins	Interfaces: CSIs/ UARTs (LIN) / I²C	Interfaces: CAN	Interfaces: USB	Interfaces: Ethernet	Timers & Other Peripherals: Timer Channels (8-bit/16-bit)	Timers & Other Peripherals: Special Timers	Timers & Other Peripherals: PWMs	Timers & Other Peripherals: Clock Speed [MHz]	Timers & Other Peripherals: Internal Oscillator(s)	Timers & Other Peripherals: Subclock 32.768 kHz	Timers & Other Peripherals: TFT control	Timers & Other Peripherals: A/D / D/A-Converter	Timers & Other Peripherals: Analog Features	Timers & Other Peripherals: DMA	Timers & Other Peripherals: Supply Voltage [V]	Miscellaneous Information: Packages	Miscellaneous Information: Qualification	Miscellaneous Information: Others Features*	Miscellaneous Information: Starter Kit
V850ES (32-bit) J Series	V850ES/JG3	μPD70F3739	384	32 K	84 / 100	5/3 (3) / 3	–	–	–	-/8	–	9	32	220 kHz	✓	–	12 x 10-bit/ 2 x 8-bit	–	4 ch	2.8 - 3.6	GC-UEU-AX (LQFP)	STD	LVI, MUL, DIV	–
		μPD70F3740	512	40 K																				
		μPD70F3741	768	60 K																				
		μPD70F3742	1024																					
	V850ES/JJ3	μPD70F3743	384	32 K	128 / 144	6/4 (4) / 3	–	–	–	-/11	–	10	32	220 kHz	✓	–	16 x 10-bit/ 2 x 8-bit	–	4 ch	2.8 - 3.6	GJ-GAE-AX (LQFP)	STD	LVI, MUL, DIV	–
		μPD70F3744	512	40 K																				
		μPD70F3745	768	60 K																				
		μPD70F3746	1024																					
	V850ES/JC3-L	μPD70F3797	16	8 K	27 / 40	2/2 (2) / 2	–	–	–	-/8	WDT, WT	8	20	220 kHz	✓	–	5 x 10-bit/-	–	4 ch	2.2 - 3.6	K8-4B4-AX (WQFN)	STD	LVI, RTO, Key return, CRC, Clock monitor	EB-V850ES/JG3L-EE
		μPD70F3798	32																					
		μPD70F3799	64																		GA-GAM-AX (LQFP), K8-5B4-AX (WQFN)			
		μPD70F3800	128																					
		μPD70F3838	256	16 K																				
		μPD70F3801	16	8K	34 / 48	4/3 (3) / 3						9					6 x 10-bit/ 1 x 8-bit							
		μPD70F3802	32																					
		μPD70F3803	64																					
		μPD70F3804	128																					
		μPD70F3839	256	16 K																				
	V850ES/JE3-L	μPD70F3805	16	8K	50 / 64	5/3 (3) / 3	–	–	–	-/8	WDT, WT	15	20	220 kHz	✓	–	10 x 10-bit/ 1 x 8-bit	–	4 ch	2.2 - 3.6	GB-6AH-AX (LQFP) K8-6B4-AX (WQFN) F1-AN8-A (FBGA)	STD	LVI, RTO, Key return, CRC, Clock monitor	
		μPD70F3806	32																					
		μPD70F3807	64																					
		μPD70F3808	128																					
		μPD70F3840	256	16K																				
	V850ES/JF3-L	μPD70F3735	128	8 K	66 / 80	3/3 (3) / 2	–	–	–	-/6	WDT, WT	7	20	220 kHz	✓	–	8 x 10-bit/ 1 x 8-bit	–	4 ch	2.2 - 3.6	GC-6AD-AX (LQFP), GK-6AK-AX (LQFP)	STD	LVI, MUL, DIV	
		μPD70F3736	256	16 K																				
	V850ES/JG3-L	μPD70F3737	128	8 K	84 / 100	5/3 (3) / 3	–	–	–	-/8	WDT, WT	9	20	220 kHz	✓	–	12 x 10-bit/ 2 x 8-bit	–	4 ch	2.2 - 3.6	GC-UEU-AX (LQFP), GF-GAS-AX (LQFP), F1-CAH-X (FBGA), F1-CAH-A (FBGA), GC-UEU-AX (LQFP), GF-GAS-AX (LQFP)	STD	LVI, MUL, DIV	
		μPD70F3738	256	16 K							WDT, RTC													
		μPD70F3792	384	32K	84 / 100 83 / 121	5/7 (7) / 3		✓																
		μPD70F3793	512	40K																				
		μPD70F3794	256																					
		μPD70F3795	384																					
		μPD70F3796	512																					
		μPD70F3841	768	80K				–																
		μPD70F3842	1028																					
		μPD70F3843	768					✓																
		μPD70F3844	1028																					
	V850ES/JE3-E	μPD70F3826	64	32K	29 / 64	3/3 (3) / 2	–	✓	✓	-/10	WDT, RTC, Endode timer	6	50	220 kHz	✓	–	8 x 10-bit/-	–	4 ch	2.85 - 3.6	GB-6AH-AX (LQFP) K8-6B4-AX (WQFN)	STD	LVI, RTO, Key return, CRC, Clock monitor	V850ES -NETWORK IT
		μPD70F3827	128	48K			1																	
		μPD70F3828	256	64K																				
		μPD70F3829	256																					
	V850ES/JF3-E	μPD70F3830	64	32K	41 / 80	5/4 (4) / 3	–	✓	✓	-/10	WDT, RTC, Endode timer	13	50	220 kHz	✓	–	9 x 10-bit/-	–	4 ch	2.85 - 3.6	GK-6AK-AX (LQFP)	STD	LVI, RTO, Key return, CRC, Clock monitor,	
		μPD70F3831	128	48K			1																	
		μPD70F3832	256	64K																				
		μPD70F3833	256																					
	V850ES/JG3-E	μPD70F3834	64	32K	64 / 100, 64 / 121	5/4 (4) / 3	–	✓	✓	-/10	WDT, RTC, Endode timer	14	50	220 kHz	✓	–	10 x 10-bit/-	–	4 ch	2.85 - 3.6	GC-UEU-AX (LQFP) F1-CAH-A (FBGA)	STD	LVI, RTO, Key return, CRC, Clock monitor	
		μPD70F3835	128	48K			1																	
		μPD70F3836	256	64K																				
		μPD70F3837	256																					
	V850ES/JH3-E	μPD70F3778	256	76 K	84 / 126	8/7 (3) / 4	–	✓	✓	-/8	Inverter Timers (16 bit) x1	–	50	220 kHz	✓	–	10 x 10-bit/-	–	4 ch	2.85 - 3.6	GF-GAT-AX (LQFP)	STD	LVI, RTO, Key return, CRC, Clock monitor	
		μPD70F3779	384																					
		μPD70F3780	512																					
		μPD70F3781	384				1																	
		μPD70F3782	512																					
		μPD70F3783																						
	V850ES/JJ3-E	μPD70F3784	512	124 K	100 / 144	10/9 (4) / 5	–	✓	✓	-/8	Inverter Timers (16 bit) x1	–	50	220 kHz	✓	–	12 x 10-bit/-	–	4 ch	2.85 - 3.6	GJ-GAE-AX (LQFP)	STD	LVI, RTO, Key return, CRC, Clock monitor	
		μPD70F3785					1																	
		μPD70F3786																						
	V850ES/JC3-H	μPD70F3809	16	8K	25 / 40	4/3 (3) / 1	–	✓	–	-/10	WDT, RTC	4	48	220 kHz	✓	–	5 x 10-bit/-	–	4 ch	2.85 - 3.6	K8-4B4-AX (WQFN)	STD	LVI, RTO, Key return, CRC, Clock monitor	V850ES-H-PLUG IT
		μPD70F3810	32	16K																				
		μPD70F3811	64	24K																				
		μPD70F3812	128																					
		μPD70F3813	256																					
	V850ES/JE3-H	μPD70F3814	16	8K	32 / 48	4/4 (4) / 2	–	✓	–	-/10	WDT, RTC, Encode timer	6	48	220 kHz	✓	–	6 x 10-bit/ 1 x 8-bit	–	4 ch	2.85 - 3.6	GA-GAM-AX (LQFP), K8-5B4-AX (WQFN)	STD	LVI, RTO, Key return, CRC, Clock monitor	
		μPD70F3815	32	16K																				
		μPD70F3816	64	24K			1																	
		μPD70F3817	128																					
		μPD70F3818	256																					
		μPD70F3819	256																					
	V850ES/JG3-H	μPD70F3820	16	8K	45 / 64	4/4 (4) / 2	–	✓	–	-/10	WDT, RTC, Encode timer, Motor timer	12	48	220 kHz	✓	–	10 x 10-bit/ 1 x 8bit	–	4 ch	2.85 - 3.6	GB-GAH-AX (LQFP), K8-6B4-AX (WQFN), F1-BA3-A (FBGA)	STD	LVI, RTO, Key return, CRC, Clock monitor	
		μPD78F3821	32	16K																				
		μPD78F3822	64	24K			1																	
		μPD78F3823	128																					
		μPD78F3824	256																					
		μPD78F3825	256																					
	V850ES/JH3-H	μPD70F3760	256	40 K	77 / 100	5/5 / 3	–	✓	–	-/13	Inverter timer (16-bit) x 1	15	48	220 kHz	✓	–	12 x 10-bit/ 2 x 8-bit	–	4 ch	2.85 - 3.6	GC-UEU-AX (LQFP)	STD	RTC, LVI, MUL, RTP, CRC	V850ES-U-PLUG IT
		μPD70F3761	384	48 K			1																	
		μPD70F3762	512	56 K																				
		μPD70F3770	256	40 K																				
		μPD70F3765	256	40 K	77 / 128	5/5 / 3	–	✓	–	-/13	Inverter timer (16-bit) x 1	15	48	220 kHz	✓	–	12 x 10-bit/ 2 x 8-bit	–	4 ch	2.85 - 3.6	GF-GAT-AX (LQFP)	STD	RTC, LVI, MUL, RTP, CRC	
		μPD70F3766	384	48 K			1																	
		μPD70F3767	512	56 K																				
		μPD70F3771	256	40 K																				
	V850ES/JG3-U	μPD70F3763	384	48 K	77 / 100	5/5 / 3	–	✓	–	-/13	Inverter timer (16-bit) x 1	15	48	220 kHz	✓	–	12 x 10-bit/ 2 x 8-bit	–	4 ch	2.85 - 3.6	GC-UEU-AX (LQFP)	STD	RTC, LVI, MUL, RTP, CRC	
		μPD70F3764	512	56 K																				
	V850ES/JH3-U	μPD70F3768	384	48 K	78 / 128	5/5 / 3	–	✓	–	-/13	Inverter timer (16-bit) x 1	15	48	220 kHz	✓	–	12 x 10-bit/ 2 x 8-bit	–	4 ch	2.85 - 3.6	GF-GAT-AX (LQFP)	STD	RTC, LVI, MUL, RTP, CRC	
		μPD70F3769	512	56 K																				

Innovative V850E2 MCUs Provide World's Highest Performance & Safety Features for Industrial Inverter applications

V850E2 Mx4 Series Combining high-performance single & dual core processing with low power consumption, the V850E2 Mx4 Series is an ideal MCU platform for high-end inverter solutions for Industrial & Building Automation applications.

The V850E2/Mx4 is a 32-bit single-chip microcontroller that integrates up to two V850E2 32-bit RISC CPU cores. The V850E2/Mx4 includes flash memory, RAM, and a large array of peripheral functions and is used to perform DSP calculations, large-capacity data-processing and advanced real-time control.

The V850E2 CPU improves the CPU processing performance through optimisation of the two-way superscalar seven-stage pipeline control. A floating point unit (FPU) that conforms to IEEE754-1985 is also included.

Key features

- Single & Dual core devices
- Single & Double precision FLoating Point Unit (FPU)
- 512 MIPS @ 200MHz per core
- Large Memory (1MB, 2MB Flash)
- 3-phase Motor control functionality
- Enhanced analog (12-bit ADC)
- Ethernet, CAN, USB Host & Function
- Dual external memory interfaces
- System Protection Functions (SPR)

High Performance Dual Core

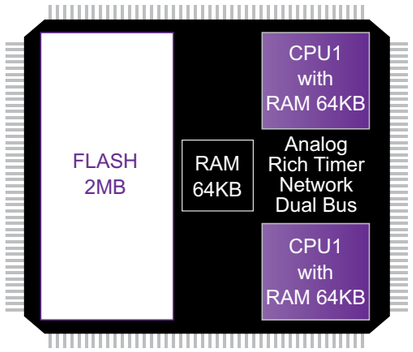

Low Power Consumption

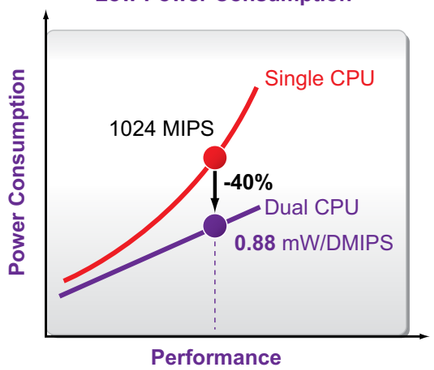

Mx4 Line-up

This line of microcontrollers, ranging from single core 216-pin 768KB to dual core 304-pin 2MB Flash, provides optimum solutions for meeting different system requirements and cost structures.

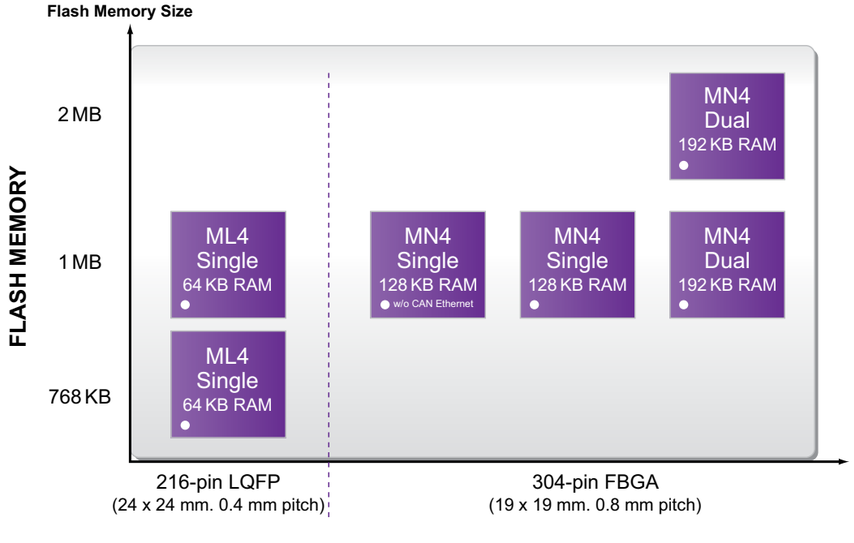

Mx4 Block diagram

The V850E2/Mx4 includes peripheral functions such as a DMA controller, timer array, UART, CSI, CAN, A/D converter, USB function controller, USB host controller, Ethernet controller, on-chip debugger, and two memory controllers. Due to the high level of peripheral integration, the cost, number of components, and mounting area can be reduced.

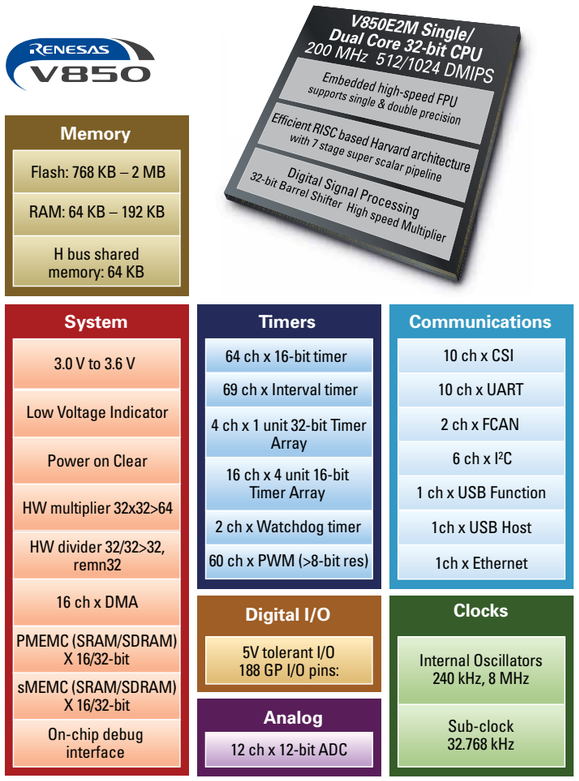

Mx4 Performance

The internal system bus that connects each CPU and DMA controller to the peripheral functions has multiple layers. The bus has a total of three layers: one layer for each CPU, and one layer for the DMA controller. The multilayer internal system bus reduces the overhead due to bus arbitration, achieving high-speed real-time operation.

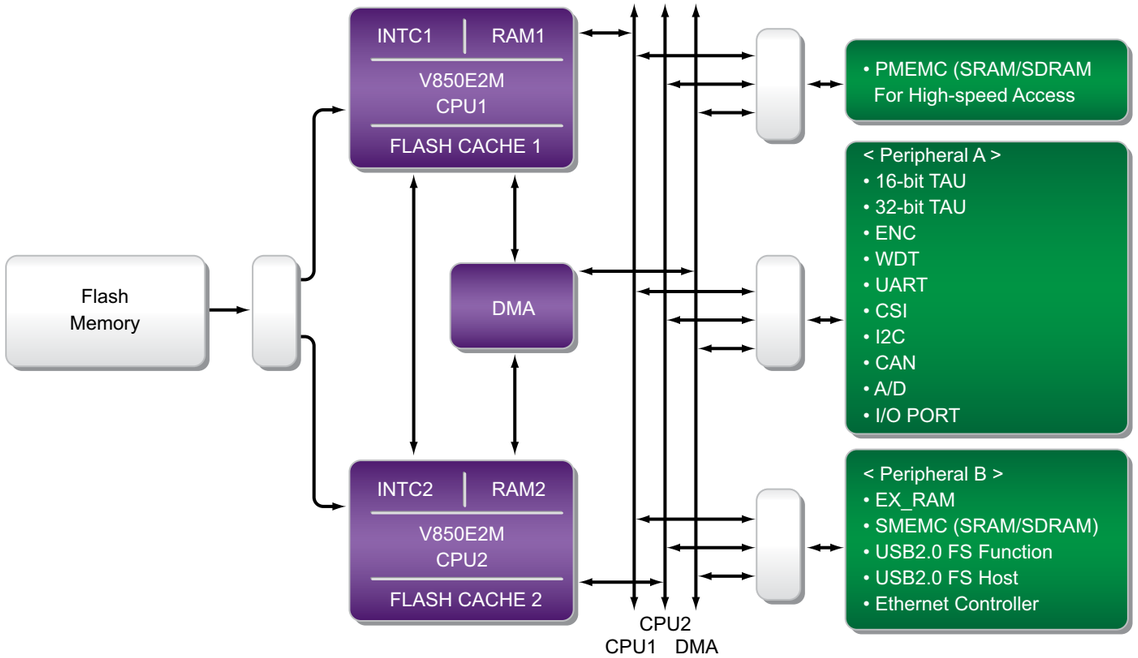

Mx4 Safety

V850E2/Mx4 V850E2/Mx4 has resource protection for illegal access and timing supervision functions.

System Protection Functions (SPF):

- Protect MCU resources:
  - Memory
    Memory Protection Unit (MPU)
  - Peripheral registers
    Peripheral Protection Unit (PPU)
  - System registers
    System Register Protection (SRP)
  - Execution time of CPU
    Timing Supervision Unit (TSU)
- Remove interference between application programs to:
  - improve system stability, simplify debugging
  - permits independent module development

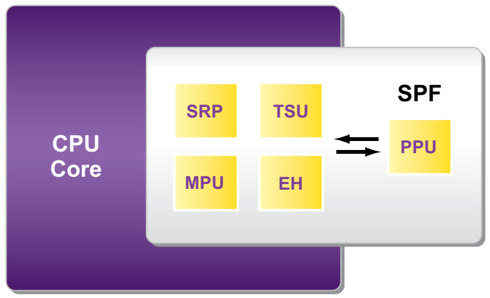

Mx4 Motor Control

The timer option function (TAPA), timer array unit A (TAUA), and/or peripheral interconnection (PIC) can be used as an inverter function that controls a 3 phase brushless motor.

- **Asynchronous Hi-Z control functions**
  Timer output for motor control can be forcibly stopped by asynchronously setting its level to high-impedance.
- **INT signal output selection function**
  Two types of interrupts, peak interrupts and valley interrupts, can be output based on the INTn signal output by the TAUA
- **A/D conversion trigger selection function**
  Two A/D conversion trigger signals can be output based on the INTn signal output by the TAUA.

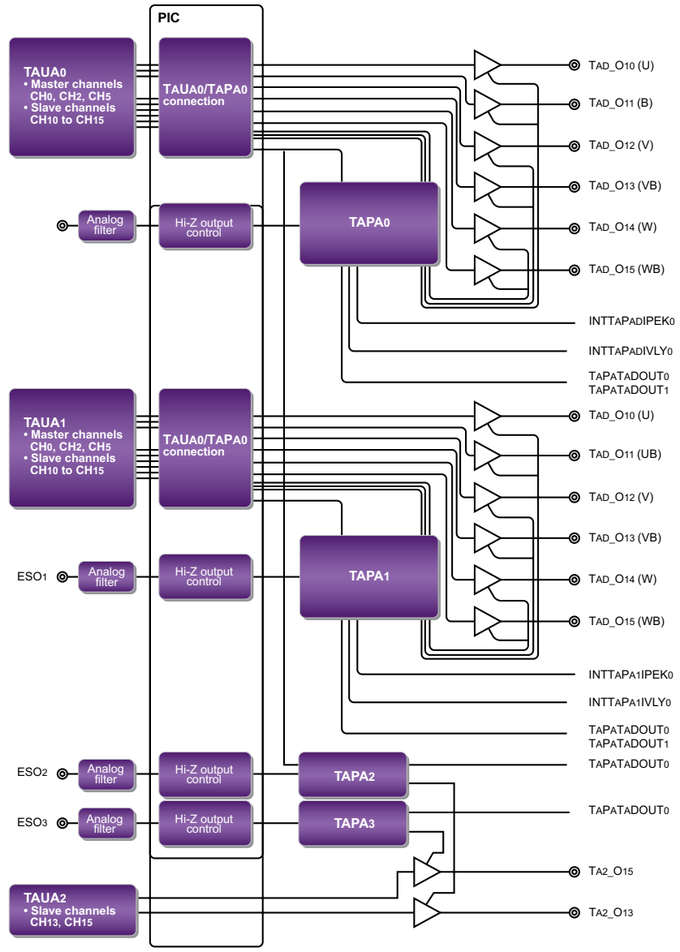

Mx4 Connectivity

Ethernet controller
The Ethernet controller includes a 10/100 Mbps Ethernet Media Access Controller (MAC) conforming to IEEE802.3, a FIFO controller for flow control, and a checksum calculation unit (only for received packets) conforming to RFC1071.

USB Function & USB Host controllers
This microcontroller has an internal USB function controller (USBF) and USB host controller (USBH) conforming to the Universal Serial Bus Specification. Data communication using the polling method is performed between the USB function controller and external host device by using a token-based protocol.

CAN controller
The product features 2 channels of on-chip CAN (Controller Area Network) controllers that comply with the CAN protocol as standardized in ISO 11898.

V850E2/Mx4 Series

Miscellaneous Information	Starter Kit	–	–
	Others Features*	Single / Dual cores	Single core
	Qualification	STD	STD
	Packages	F1-HN6-A (FBGA)	GM-GAA-A (LQFP)
Timers & Other Peripherals	Supply Voltage [V]	1.2 - 3.3	1.2 - 3.3
	DMA	16 ch	8 ch
	Analog Features	–	–
	A/D / D/A-Converter	12ch x 12-bit / -	12ch x 12-bit / -
	TFT control	–	–
	Subclock 32.768 kHz	–	–
	Internal Oscillator(s)	–	–
	Clock Speed [MHz]	200	200
	PWMs	–	–
	Special Timers	16-bit : 16 ch x 4 unit 32bit : 4 ch x 1 unit ENC timer : 2 ch	16-bit : 16 ch x 2 unit 32bit : 4 ch x 1 unit ENC timer : 2 ch
	Timer Channels (8-bit/16-bit)	–	–
Interfaces	Ethernet	– / √	√
	USB	√	√
	CAN	– / 2	1
	CSIs/ UARTs (LIN) / I²C	10 / 10 / 6	4 / 4 / 2
	I/O /Pins	188 / 304	120 / 206
Memory	RAM [Byte]	64 K / 128 K	64 K
	Size [KB]	1000 / 1000 / 2000	768 / 1000
Device	Part Number	µPD70F3510 / µPD70F3512 / µPD70F3514 / µPD70F3515	µPD70F4021 / µPD70F4022
	Nickname	V850E2/MN4	V850E2/ML4
	Core	V850E2M (32-bit) M_Series	

V850E2/Mx4 Hardware development tools

RTE-V850E2MN4-EB (Midas-Lab)

Features

- Hi Functional
- Embedded with MN4 (Single or Dual)
- On board Memory: SRAM, SDRAM
- Connectors: UART connector, CAN, analog input port, USB Function and Host, Ethernet.

QB-V850E2MN4-TB (Renesas)

Features

- Low Price
- Embedded with V850E2/MN4 (Dual)
- On board Memory: Nothing
- Connectors: USB Function, Ethernet.
- Widely universal area (2.54 mm pitch)

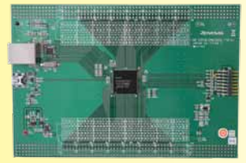

E1 emulator or Minicube

Midas RTE-2000H-TP emulator

V850E2/Mx4 Software development tools

e²studio	e²studio Integrated Development Environment based on Eclipse. Includes free of charge V850 GNU compiler.
Green Hills Software, Inc.	MULTI IDE combines a powerful debugger, editor, code browser, configuration manager and uses Green Hills software's optimizing C, C++ compilers
IAR Systems	IAR Embedded workbench is an integrated development environment and optimized C++ compiler, with emulator debug support, instruction set simulator & run time libraries
µC/OS-II™ The Real-Time Kernel Micriµm	uC/OS-II is a portable, scalable, preemptive, real-time determistic multitasking kernel for microcontrollers
SEGGER	embOS is a priority controlled real time operating system, designed to be used as foundation for the development of embeddedreal time applications
CoDeSys	CoDeSys 3S-Smart Software Solutions GmbH is the leading IEC 61131-3 development system for programming and creating controller applications

Innovative V850E2 MCUs Provide Increased Performance & Safety Features for CAN applications

V850E2 Fx4 Series: Combining high-performance processing & low power consumption with multiple CAN communication channels, the V850E2 Fx4 Series is an ideal MCU platform for Industrial CAN applications.

- Improved features
  - CPU clock to 80MHz
  - Flash memory to 2 Mbytes
  - ADC accuracy up to 12-bit
- Expanded timer structure
- New peripherals
  - FlexRay
  - MOST
  - PWM generation / diagnosis
  - Voltage comparator with hysteresis
  - LIN master
- New system protection functionality
  - Memory protection unit (MPU)
  - Peripheral register protection unit (PPU)
  - System register protection (SRP)
  - CPU execution controlled by timing supervision unit (TSU)
- High temperature options
  - A = -40°C to +85°C
  - A1 = -40°C to +110°C
  - A2 = -40°C to +125°C

Fx4, Fx4-L line-up

This line of microcontrollers, ranging from 64-pin 256KB to 208-pin 2MB, provides optimised solutions for meeting different system requirements and cost structures.

Performance: 64 MHz - 80 MHz
Packages: 64 - 208 pins
Flash Memory: 256 KB - 2 MB

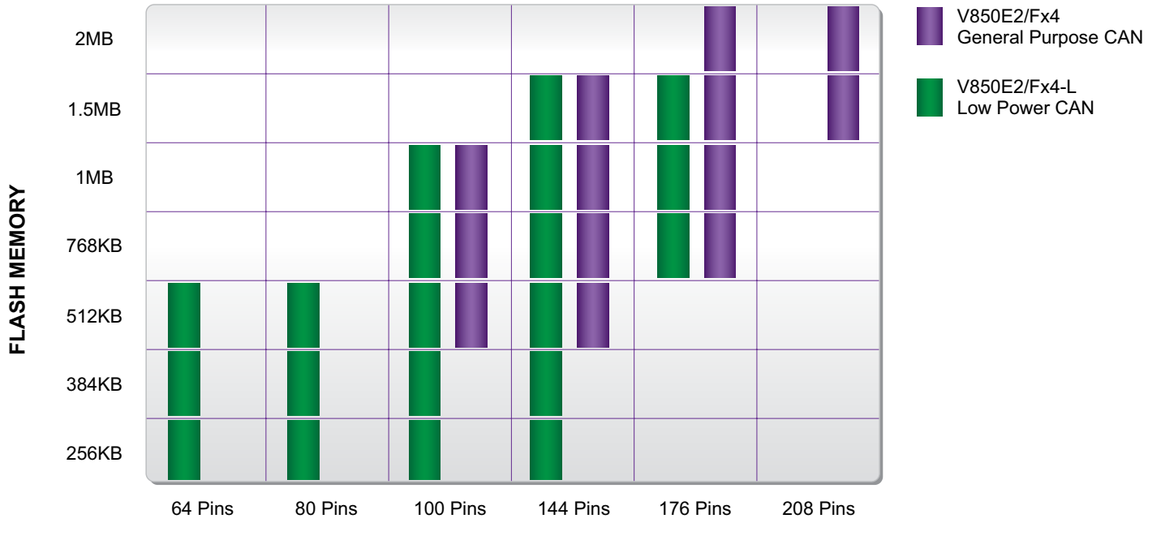

Extensive Array of Peripherals

The V850 Fx4 Series, including the V850E2/FG4 featured in he block diagram, was designed with multiple CAN channels and a multitude of peripherals to support you design needs.

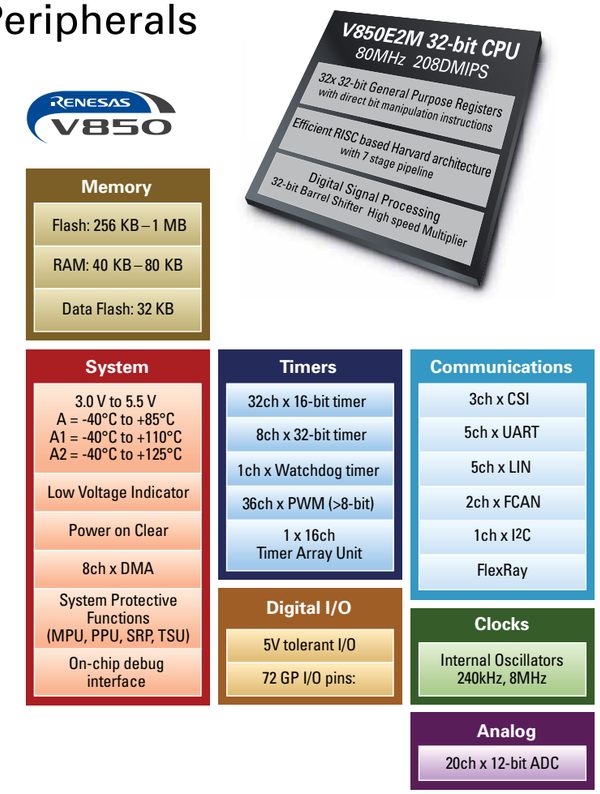

V850E2/Fx4 Series

Nickname/ Group	Part number	Flash size [B]	RAM [B]	Data flash [B]	Core	FPU	I/O lines	CSI/UART (LIN)	CAN	I²C	External bus	Other interfaces	Timer channels [8-/16-/32-bit]	PWMs	Clock speed [MHz]	Internal oscillator(s)	Subclock [32 kHz]	A/D converter / D/A converter	Supply voltage (I/O) [V]	Pins	Packages	$T_{a, max}$ [°C]	Other features
V850E2/FE4-L	μPD70F3570	256 K	24 K	32 K	V850E2	–	43	2/2(2)	1	1	–	–	–/16/4	15	48	240 kHz & 8 MHz	–	12 x 10-bit/-	4.5...5.5	64	GB-GAH-G	85, 110, 125	BUR, DMA, POC, SPF
	μPD70F3571	384 K	28 K																				
	μPD70F3572	512 K	32 K																				
V850E2/FF4-L	μPD70F3573	256 K	24 K	32 K	V850E2	–	57	2/2(2)	1	1	–	–	–/16/4	18	48	240 kHz & 8 MHz	–	14 x 10-bit/-	4.5...5.5	80	GK-GAK-G	85, 110, 125	BUR, DMA, POC, SPF
	μPD70F3574	384 K	28 K																				
	μPD70F3575	512 K	32 K																				
V850E2/FG4-L	μPD70F3576	256 K	24 K	32 K	V850E2	–	76	3/3(3)	2	1	–	–	–/16/4	18	48	240 kHz & 8 MHz	–	20 x 10-bit/-	4.5...5.5	100	GC-UEU-G	85, 110, 125	BUR, DMA, POC, SPF
	μPD70F3577	384 K	28 K																				
	μPD70F3578	512 K	32 K																				
	μPD70F3579	768 K	48 K												64								
	μPD70F3580	1 M	64 K																				
V850E2/FJ4-L	μPD70F3581	256	24 K	32 K	V850E2	–	116	3/3(3)	2	1	–	–	–/32/4	30	48	240 kHz & 8 MHz	–	24 x 10-bit/-	4.5...5.5	144	GJ-GAE-G	85, 110, 125	BUR, DMA, POC, SPF
	μPD70F3582	384 K	28 K					3/5(5)							64								
	μPD70F3583	512 K	32 K																				
	μPD70F3584	768 K	48 K																				
	μPD70F3585	1 M	64 K																				
	μPD70F3586	1.5 M	96 K																				
V850E2/FK4-L	μPD70F3587	768 K	48 K	32	V850E2	–	141	4/5(5)	2	1	–	–	–/32/4	31	64	240 kHz & 8 MHz	–	24 x 10-bit/-	4.5...5.5	176	GM-GAR-G	85, 110, 125	BUR, DMA, POC, SPF
	μPD70F3588	1 M	64 K																				
	μPD70F3589	1.5 M	96 K																				
V850E2/FG4	μPD70F3548	512 K	48 K	32 K	V850E2	–	72	3/5(5)	2	1	–	–	–/32/8	36	80	240 kHz & 8 MHz	–	20 x 12-bit/-	3.0...5.5	100	GC-UEU-G	85, 110, 125	BUR, DMA, POC, SPF
	μPD70F3549	768 K	64 K																				
	μPD70F3550	1 M	80 K									FlexRay											
	μPD70F4000	512 K	48 K																				
	μPD70F4001	768 K	64 K																				
	μPD70F4002	1 M	80 K																				
V850E2/FJ4	μPD70F3551	512 K	48 K	32 K	V850E2	–	112	4/6(6)	3	1	–	–	–/32/8	65	80	240 kHz & 8 MHz	✓	24 x 12-bit/-	3.0...5.5	144	GJ-GBG-G	85, 110, 125	BUR, DMA, POC, SPF
	μPD70F3552	768 K	64 K																				
	μPD70F3553	1 M	80 K																				
	μPD70F3554	1.5 M	112 K	64 K		✓																	
	μPD70F4003	512 K	48 K	32 K		–						FlexRay											
	μPD70F4004	768 K	64 K																				
	μPD70F4005	1 M	80 K																				
	μPD70F4006	1.5 M	112 K	64 K		✓																	
V850E2/FK4	μPD70F3555	768 K	64 K	32 K	V850E2	–	136	5/8(8)	4	1	✓	–	–/32/8	68	80	240 kHz & 8 MHz	–	40 x 12-bit/-	3.0...5.5	176	GM-GBK-G	85, 110, 125	BUR, DMA, POC, SPF
	μPD70F3556	1 M	80 K																				
	μPD70F3557	1.5 M	112 K	64 K		✓																	
	μPD70F3558	2 M	144 K																				
	μPD70F4007	768 K	64 K	32 K		–						FlexRay											
	μPD70F4008	1 M	80 K																				
	μPD70F4009	1.5 M	112 K	64 K		✓																	
	μPD70F4010	2 M	144 K																				
V850E2/FL4	μPD70F3559	1.5 M	112 K	64 K	V850E2	✓	164	5/12 (12)	5	1	✓	–	–/32/8	84	80	240 kHz & 8 MHz	✓		3.0...5.5	208, 272	GD-FAD-G, F1-JN1-A	85, 110, 125	BUR, DMA, POC, SPF
	μPD70F3560	2 M	144 K									FlexRay											
	μPD70F4011	1.5 M	112 K																				
	μPD70F4012	2 M	144 K																				

V850E2/Fx4 hardware development tools

IECUBE2
In-circuit emulator (ICE)

E1
On-chip debugging (OCD)

AB-050-Fx4-...
Evaluation boards

PG-FP5
Flash programmer

On-chip debugger (OCD)

LAUTERBACH DEVELOPMENT TOOLS

In-circuit emulation (ICE) & On-chip debugging (OCD)

Z SYSTEM

V850E2/Fx4 software development tools

Software	Type	Supplier
C/C++ compiler	Package	Greenhills, IAR, e2studio
AUTOSAR	Package	Electrobit, Vector
OSEK	Operating system	Vector
FlexRay	Device configurator	Electrobit, Vector
CAN	Communication software	Vector
LIN	Communication software	Vector
Flash	Bootloader	Electrobit, Vector
Data flash	Library software	Renesas
Self programming	Library software	Renesas

V850ES/Fx3 Series

Device		Memory			Interfaces					Timers & Other Peripherals							Miscellaneous Information					
Nickname	Part Number	Size [KB]	Type	RAM [B]	I/O Lines	CSIs/UARTs (LIN)	CAN	I²C	External Bus	Timer Channels [8-bit/16-bit]	PWMs	Clock Speed [MHz]	Internal Oscillator(s)	Subclock [32 kHz]	LCD	A/D- / D/A-Converter	Supply Voltage [V]	Pins	Packages	Qualification	Other Features	OCD
V850ES/FE3	µPD70F3370	128	Flash	8 K	51	2/2 (2)	1	1	–	–/7	8	32	240 kHz, 8 MHz	✓	–	10 x 10-bit/–	3.3 - 5.5	64	GB-GAH-AX	A, A1, A2	DFM, POC, LVI, DMA	✓
	µPD70F3371	256		16 K																		
V850ES/FF3	µPD70F3372	128	Flash	8 K	67	2/2 (2)	1	1	–	–/7	8	32	240 kHz, 8 MHz	✓	–	12 x 10-bit/–	3.3 - 5.5	80	GK-GAK-AX	A, A1, A2	DFM, POC, LVI, DMA	✓
	µPD70F3373	256		16 K																		
V850ES/FG3	µPD70F3374	128	Flash	8 K	84	2/3 (3)	2	1	–	–/8	11	32	240 kHz, 8 MHz	✓	–	16 x 10-bit/–	3.3 - 5.5	100	GC-UEU-AX	A, A1, A2	DFM, POC, LVI, DMA	✓
	µPD70F3375	256		16 K																		
	µPD70F3376	384		24 K		2/5 (5)						48										
	µPD70F3377	512		32 K																		
V850ES/FJ3	µPD70F3378	256	Flash	16 K	128	3/3 (3)	3	1	✓	–/9	14	32	240 kHz, 8 MHz	✓	–	24 x 10-bit/–	3.3 - 5.5	144	GJ-GAE-AX	A, A1, A2	DFM, POC, LVI, DMA	✓
	µPD70F3379	384		24 K		3/6 (6)	4					48										
	µPD70F3380	512		32 K																		
	µPD70F3381	768		40 K		4/6 (6)																
	µPD70F3382	1024		48 K																		
V850ES/FK3	µPD70F3383	512	Flash	32 K	152	4/8 (8)	5	1	✓	–/12	17	48	240 kHz, 8 MHz	✓	–	16 x 10-bit, 24 x 10-bit/–	3.3 - 5.5	176	GM-GAR-AX	A, A1, A2	DFM, POC, LVI, DMA	✓
	µPD70F3384	768		48 K																		
	µPD70F3385	1024		60 K																		
V850ES/FE3-L	µPD70F3610	64	Flash	6 K	51	2/2 (2)	1	1	–	–/6	5	20	240 kHz, 8 MHz	✓	–	10 x 10-bit/–	3.3 - 5.5	64	GB-GAH-AX	A, A1, A2	POC, LVI	✓
	µPD70F3611	96																				
	µPD70F3612	128		8 K																		
	µPD70F3613	192		12 K																		
	µPD70F3614	256		16 K																		
V850ES/FF3-L	µPD70F3615	64	Flash	6 K	67	2/2 (2)	1	1	–	–/6	5	20	240 kHz, 8 MHz	✓	–	12 x 10-bit/–	3.3 - 5.5	80	GK-GAK-AX	A, A1, A2	POC, LVI	✓
	µPD70F3616	96																				
	µPD70F3617	128		8 K																		
	µPD70F3618	192		12 K																		
	µPD70F3619	256		16 K																		
V850ES/FG3-L	µPD70F3620	128	Flash	8 K	84	2/3 (2)	1	1	–	–/6	5	20	240 kHz, 8 MHz	✓	–	16 x 10-bit/–	3.3 - 5.5	100	GC-UEU-AX	A, A1, A2	POC, LVI	✓
	µPD70F3621	192		12 K																		
	µPD70F3622	256		16 K																		

High Performance cores, Enhanced analog & Safety, 3-phase motor control

V850 I Series Combining high-performance processing, powerful 16-bit inverter timers and enhanced analog features with advanced security & safety features, the V850 I Series is an ideal MCU platform for multi 3-phase motor control applications.

Device			Memory		Interfaces					Timers & Other Peripherals											Miscellaneous Information			
Core	Nickname	Part Number	Size [KB]	RAM [Byte]	I/O /Pins	CSIs/ UARTs (LIN) / I²C	CAN	USB	Ethernet	Timer Channels (8-bit/16-bit)	Special Timers	PWMs	Clock Speed [MHz]	Internal Oscillator(s)	Subclock 32.768 kHz	TFT control	A/D / D/A-Converter	Analog Features	DMA	Supply Voltage [V]	Packages	Qualification	Others Features*	Starter Kit
V850ES (32-bit) I Series	V850ES/IK1	µPD703327	64	4 K	39 / 64	1/2	–	–	–	-/7	Inverter timer (16-bit) x 1	12	32	–	–	–	8 x 10-bit/-	–	-	3.5 - 5.5	GC-8BS-A (LQFP), K8-9B5-AX (WQFN)	STD	POC, MUL	–
		µPD703329	128	6 K																				
		µPD70F3329																						
	V850ES/IE2	µPD70F3713	64	7 K	39 / 64	1/2	–	–	–	-/7	Inverter timer (16-bit) x 1	16	20	–	–	–	4 x 10-bit/-	–	-	3.5 - 5.5	GC-8BS-A (LQFP)	STD	POC, MUL	
		µPD70F3714	128																					
V850E (32-bit) I Series	V850E/IA3	µPD703183	128	6 K	50 / 80	2/2	–	–	–	-/8	Inverter timer (16-bit) x 1	8	64	–	–	–	12 x 10-bit/-	–	4 ch	3.5 - 5.5	GC-8BT-A (LQFP)	STD	MUL	
		µPD703184	256	12 K																				
	V850E/IF3	µPD70F3451	128	8 K	48 / 80	3/4	–	–	–	-/13	Inverter timer (TMQOP) x 2	64	64	–	–	–	4 x 10-bit, 10 x 12-bit/-	–	4 ch	3.5 - 5.5	GC-UBT-A (LQFP)	STD	POV, LVI, MUL	
		µPD70F3452	256	12 K																				
	V850E/IG3	µPD70F3453	128	8 K	64 / 100	3/4	–	–	–	-/13	Inverter timer (TMQOP) x 3	64	64	–	–	–	8 x 10-bit, 10 x 12-bit/-	–	4 ch	3.5 - 5.5	GC-8EA-A (LQFP), GF-GAS-A (LQFP)	STD	POV, LVI, MUL	
		µPD70F3454	256	12 K																				
	V850E/IA4	µPD703185	128	6 K	64 / 100	2/2	–	–	–	-/9	Inverter timer (16-bit) x 2	18	64	–	–	–	16 x 10-bit/-	–	4 ch	3.5 - 5.5	GC-8EU-A (LQFP), GF-3BA-A (LQFP)	STD	MUL	
		µPD703186	256	12 K																				
		µPD70F3186																						
	V850E/IG4	µPD70F3913	256	24 K	67 / 100	3/4(0)	–	–	–	-/13	2 x Motor Control PWM	22	100	–	–	–	1 x 10-bit, 2 x 12-bit /-	6 x Opamp, 12 x Comparator	7 ch	1.35 - 1.65 4.0 - 5.5	GC-UEU-AX (LQFP), GF-GAS-AX (LQFP)	STD	POC, LVI, MUL	
		µPD70F3914	384																					
		µPD70F3915	480																					
	V850E/IH4	µPD70F3916	256	24 K	80 / 128	3/4(0)	–	–	–	-/13	2 x Motor Control PWM	22	100	–	–	–	1 x 10-bit, 2 x 12-bit / -	6 x Opamp, 12 x Comparator	7 ch	1.35 - 1.65 4.0 - 5.5	GF-GAT-AX (LQFP)	STD	POC, LVI, MUL	
		µPD70F3917	384																					
		µPD70F3918	480																					
	V850E/IG4-H	µPD70F3919	256	24 K	63 / 100	3/4(0)	–	✓	–	-/13	2 x Motor Control PWM	22	100	–	–	–	1 x 10-bit, 2 x 12-bit / -	6 x Opamp, 12 x Comparator	7 ch	1.35 - 1.65 4.0 - 5.5	GC-UEU-AX (LQFP)	STD	POC, LVI, MUL	
		µPD70F3920	384																					
		µPD70F3921	480																					
	V850E/IH4-H	µPD70F3922	256	24 K	80 / 128	3/4(0)	–	✓	–	-/13	2 x Motor Control PWM	22	100	–	–	–	1 x 10-bit, 2 x 12-bit / -	6 x Opamp, 12 x Comparator	7 ch	1.35 - 1.65 4.0 - 5.5	GF-GAT-AX (LQFP)	STD	POC, LVI, MUL	
		µPD70F3923	384																					
		µPD70F3924	480																					

The Renesas Ecosystem

> *Consultant and tool vendor network*

www.renesas.eu/alliance

> *University program*

www.renesasuniversity.com

> *Online training*

www.renesas.interactive.com

Think it. Build it. Post it.

> *Customized updates*

www.renesasrulz.com

Before purchasing or using any Renesas Electronics products listed herein, please refer to the latest product manual and/or data sheet in advance.

Renesas Electronics Europe
www.renesas.eu

© 2012 Renesas Electronics Europe.
All rights reserved. Printed in Germany.
Document No. R01CL0029ED0200