RV1S9209A

R08DS0218EJ0200
Rev.2.00
Jun. 06, 2025

LOW FORWARD-CURRENT(IF) TOTEM POLE OUTPUT TYPE HIGH CMTI, IPM DRIVER,
5-PIN SSOP WITH 8.2mm CREEPAGE DISTANCE (LSSO5) PHOTOCOUPLER

DESCRIPTION

The RV1S9209A is an optical coupled high-speed, totem pole output (active high output type) isolator containing an AlGaAs LED on the input side and a photodiode and a signal processing circuit on the output side on one chip.
The RV1S9209A is specified high CMTI and pulse width distortion with operating temperature. It is suitable for IPM (Intelligent Power Module) drive.

FEATURES

- Small and long creepage (8.2 mm MIN, LSSO5)
- Totem pole output (Active High Output Type)
- Pulse width distortion ($|t_{PLH} - t_{PHL}|$ = 80 ns MAX.)
- High common mode transient immunity ($|CM_H|$, $|CM_L|$ = 50 kV/μs MIN.)
- Operating ambient temperature (125 °C MAX.)
- High isolation voltage (BV = 5 000 Vr.m.s.)
- Embossed tape product : RV1S9209ACCSP-10Yx#KC0 : 3 500 pcs/reel
- Pb-free product
- Safety standard
  - UL : UL1577, Double protection
  - CSA : CAN/CSA-C22.2 No.62368-1, Reinforced insulation
  - VDE : DIN EN IEC 60747-5-5 (Option)

PIN CONNECTION
(Top View)

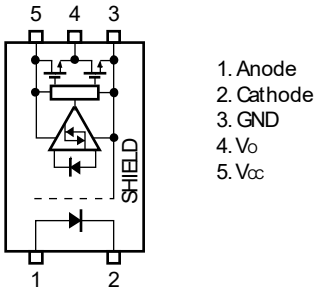

APPLICATIONS

- IPM Driver
- General purpose inverter
-

Start of mass production
Feb.2021

PACKAGE DIMENSIONS (UNIT: mm)

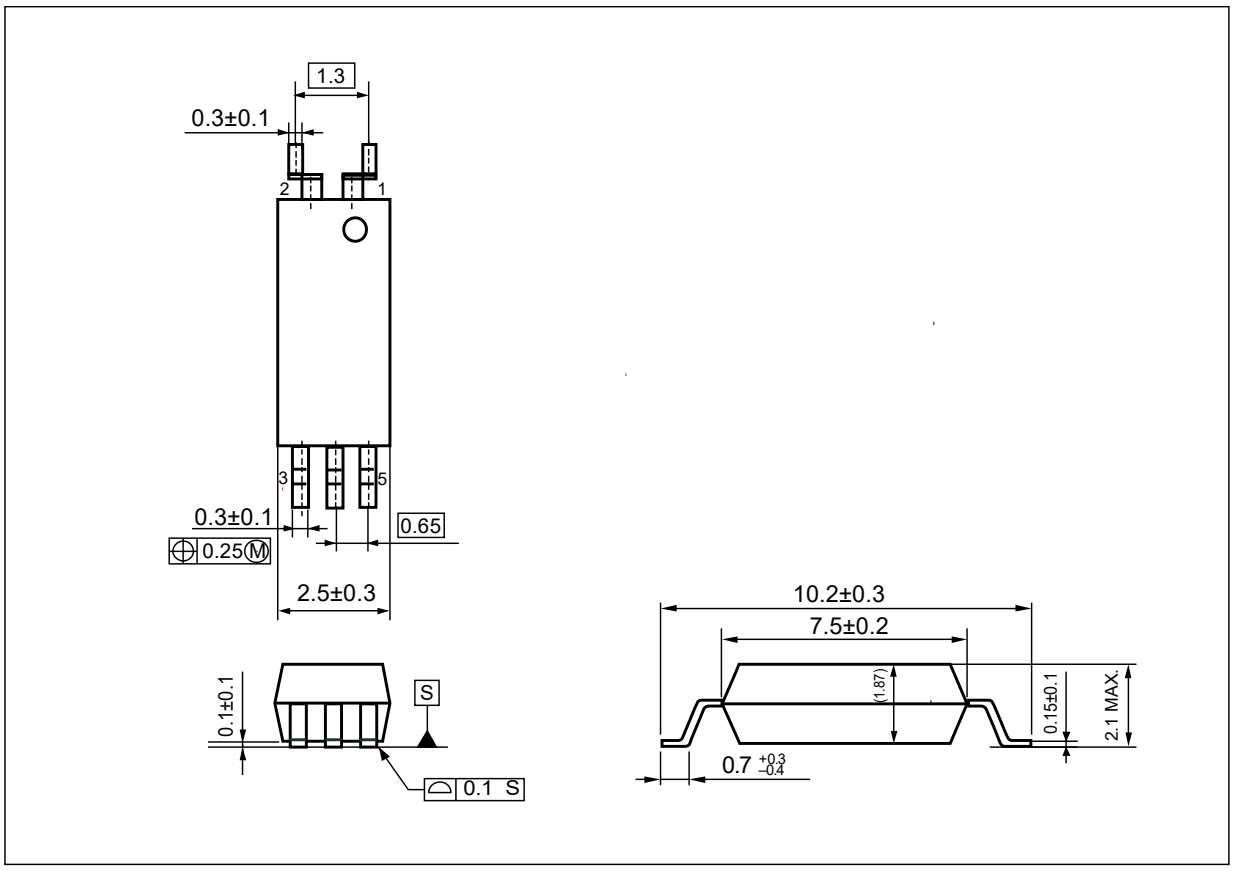

Weight :0.075g（TYP.）

PHOTOCOUPLER CONSTRUCTION

Parameter	MIN.
Air Distance	8.2 mm
Creepage Distance	8.2 mm
Isolation Distance	0.15 mm

BLOCK DIAGRAM

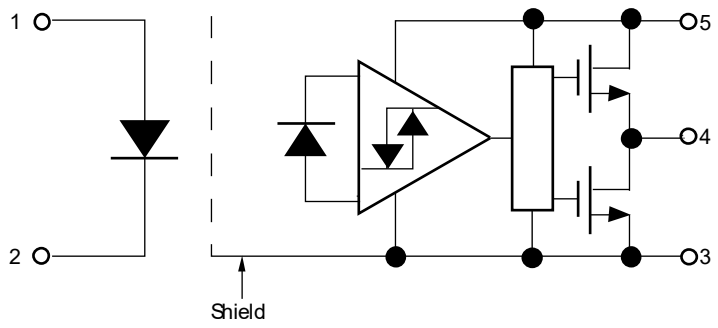

LED	Output
ON	H
OFF	L

MARKING EXAMPLE

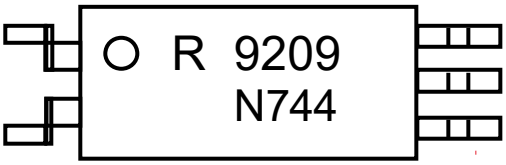

R		An initial of “Renesas”	
9209		Product Part Number＊	
○		No.1 pin Mark	
N744	N	Rank Code	
	744	Assembly Lot	
		7	Last one-digit of Assembly Year
		44	Weekly Serial Code

＊）Applicable type numbers listed below

RV1S 9209 ACCSP-10Yx

Marking type number. ”RV1S”and “ACCSP-10Yx” are omitted from original type number.

ORDERING INFORMATION

Part Number	Order Number	Solder Plating Specification	Packing Style	Safety Standard Approval	Application Part Number *1
RV1S9209ACCSP -10YC	RV1S9209ACCSP -10YC#SC0	Pb-Free and Halogen Free (Ni/Pd/Au)	Embossed Tape 20 pcs	UL, CSA Approved	RV1S9209A
	RV1S9209ACCSP -10YC#KC0		Embossed Tape 3 500 pcs/reel		
RV1S9209ACCSP -10YV	RV1S9209ACCSP -10YV#SC0		Embossed Tape 20 pcs	UL, CSA, VDE Approved	
	RV1S9209ACCSP -10YV#KC0		Embossed Tape 3 500 pcs/reel		

Notes: *1. For the application of the safety standard, the following part number should be used.

ABSOLUTE MAXIMUM RATINGS (T_A = 25 °C, unless otherwise specified)

Parameter		Symbol	Ratings	Unit
Diode	Forward Current	I_F	20	mA
	Reverse Voltage	V_R	5	V
	Power Dissipation *1	P_D	45	mW
Detector	Supply Voltage	V_{CC}	−0.5 to +25	V
	Output Voltage	V_O	−0.5 to +25	V
	Output Current	I_O	25	mA
	Power Dissipation *2	P_C	250	mW
Isolation Voltage *3		BV	5 000	Vr.m.s.
Operating Ambient Temperature		T_A	−40 to +125	°C
Storage Temperature		T_{stg}	−40 to +150	°C

Notes: *1. Reduced to 1.2 mW/°C at T_A = 110 °C or more.

*2. Reduced to 4.0 mW/°C at T_A = 85 °C or more.

*3. AC voltage for 1 minute at T_A = 25 °C, RH = 60 % between input and output.
Pins 1-2 shorted together, 3-5 shorted together.

RECOMMENDED OPERATING CONDITIONS

Parameter	Symbol	MIN.	TYP.	MAX.	Unit
Supply Voltage	V_{CC}	4.5	15	20	V
Forward Current (ON)	$I_{F(ON)}$	5		10	mA
Forward Voltage (OFF)	$V_{F(OFF)}$	0		0.8	V
Operating Ambient Temperature	T_A	−40		125	°C

ELECTRICAL CHARACTERISTICS

(T_A = −40 to +125 °C, V_{CC} = 4.5 to 20 V, unless otherwise specified)

Parameter		Symbol	Conditions	MIN.	TYP.*1	MAX.	Unit
Diode	Forward Voltage	V_F	I_F = 10 mA, T_A = 25 °C	1.35	1.56	1.75	V
	Reverse Current	I_R	V_R = 3 V, T_A = 25 °C			10	μA
	Input Capacitance	C_t	V_F = 0 V, f = 1 MHz, T_A = 25 °C		30		pF
Detector	High Level Supply Current *4	I_{CCH}	V_{CC} = 4.5 V, I_F = 5 mA		1.0	3	mA
			V_{CC} = 20 V, I_F = 5 mA		1.6	3	
	Low Level Supply Current *4	I_{CCL}	V_{CC} = 4.5 V, I_F = 0 mA		1.2	3	mA
			V_{CC} = 20 V, I_F = 0 mA		1.8	3	
	High Level Output Voltage	V_{OH}	V_{CC} = 4.5 V, I_O = −2.6 mA, I_F = 5 mA	2.7	3.1		V
			V_{CC} = 20 V, I_O = −2.6 mA, I_F = 5 mA	17.4	18.6		
	Low Level Output Voltage *2	V_{OL}	I_O = 3.5 mA, I_F = 0 mA		0.25	0.6	V
	High Level Output Short Circuit Current *3, *4	I_{OSH}	V_{CC} = 4.5 V, V_O = GND, I_F = 5 mA		−45	−7	mA
	Low Level Output Short Circuit Current *3, *4	I_{OSL}	V_{CC} = V_O = 4.5 V, V_F = 0 V	7	34		mA
Coupled	Threshold Input Current *4	I_{FLH}	V_{CC} = 4.5 V, V_O > 2.7 V, I_O = −2.6 mA		1.6	3.8	mA
	Isolation Resistance	R_{I-O}	V_{I-O} = 1kV_{DC}, RH = 60 %, T_A = 25 °C	10^{11}			Ω
	Isolation Capacitance	C_{I-O}	V = 0 V, f = 1MHz, T_A = 25 °C		0.6		pF
	Propagation Delay Time (H → L) *5	t_{PHL}	C_L = 15 pF, I_F = 5 → 0 mA, V_{THHL} = 1.3 V		108	200	ns
	Propagation Delay Time (L → H) *5	t_{PLH}	C_L = 15 pF, I_F = 0 → 5 mA, V_{THLH} = 1.3 V		121	200	
	Pulse Width Distortion	PWD = $\lvert t_{PLH} - t_{PHL} \rvert$	C_L = 15 pF, I_F = 5 ↔ 0 mA		13	80	ns
	Propagation Delay Difference Between Any Two Parts	PDD = $t_{PLH} - t_{PHL}$		−100		100	
	Rise Time (10-90%) *5	t_r	C_L = 15 pF, I_F = 0 → 5 mA		25		ns
	Fall Time (90-10%) *5	t_f	C_L = 15 pF, I_F = 5 → 0 mA		5		
	Common Mode Transient Immunity at High Level Output *6	$\lvert CM_H \rvert$	V_{CC} = 5 V, T_A = 25 °C, I_F = 5 mA, V_{CM} = 1.5 kV	50			kV/μs
	Common Mode Transient Immunity at Low Level Output *6	$\lvert CM_L \rvert$	V_{CC} = 5 V, T_A = 25 °C, I_F =0 mA, V_{CM} = 1.5 kV	50			

Notes: *1. Typical values at T_A = 25 °C

*2. Because V_O of 2.4 V may be output when the LED current is not input and when output supply of V_{CC} = 4.5 V or less, it is important to confirm the characteristics (operation with the power supply on and off) during design, before using this device.

*3. Duration of output short circuit time should not exceed 10 ms.

*4. The polarity of the current flowing from the external circuit to the RV1S9209A is positive.

*5. Test circuit for propagation delay time

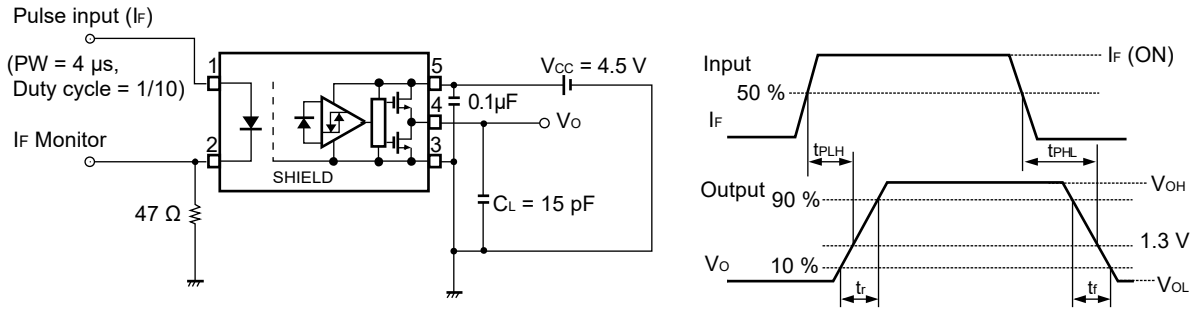

Remark C_L includes probe and stray wiring capacitance.

*6. Test circuit for common mode transient immunity

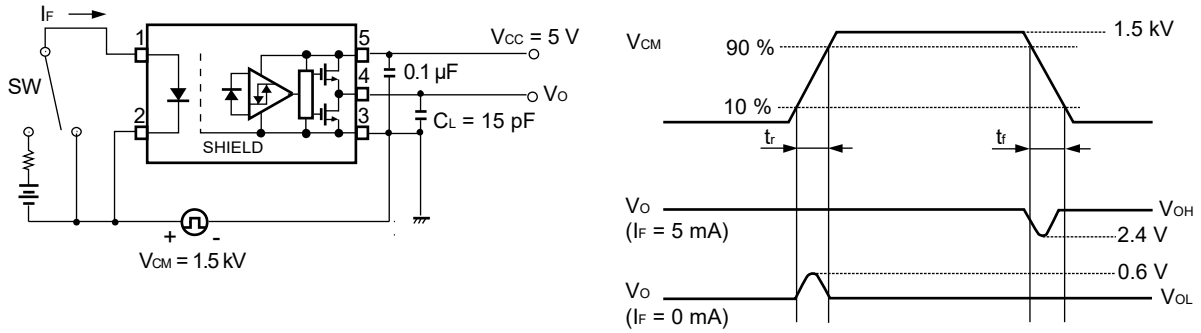

Remark C_L includes probe and stray wiring capacitance.

TYPICAL CHARACTERISTICS (T_A = 25 °C, unless otherwise specified)

DIODE POWER DISSIPATION vs. AMBIENT TEMPERATURE

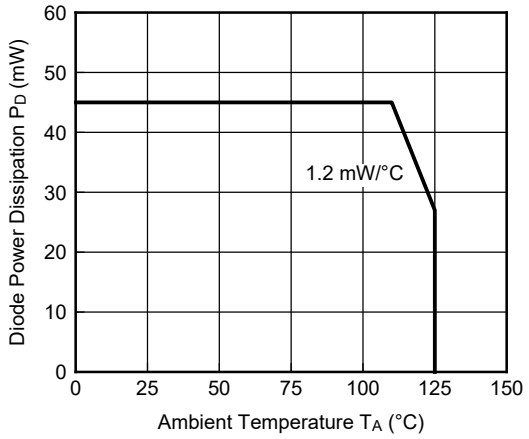

DETECTOR POWER DISSIPATION vs. AMBIENT TEMPERATURE

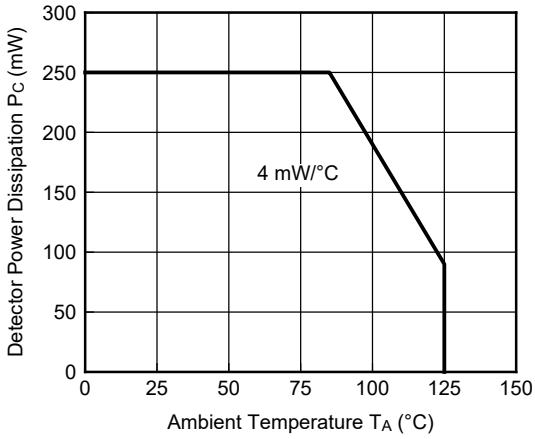

FORWARD CURRENT vs. FORWARD VOLTAGE

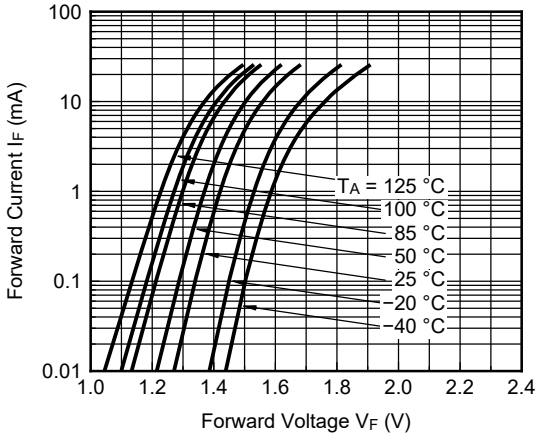

SUPPLY CURRENT vs. AMBIENT TEMPERATURE

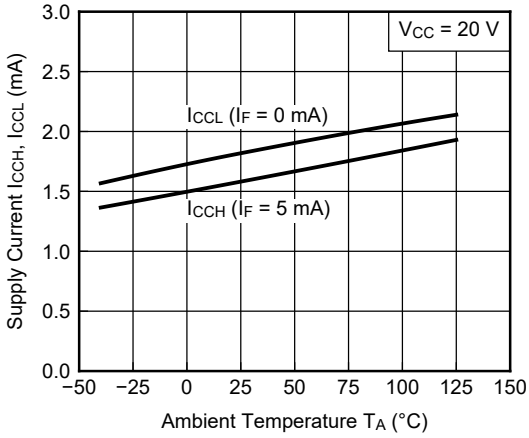

THRESHOLD INPUT CURRENT vs. AMBIENT TEMPERATURE

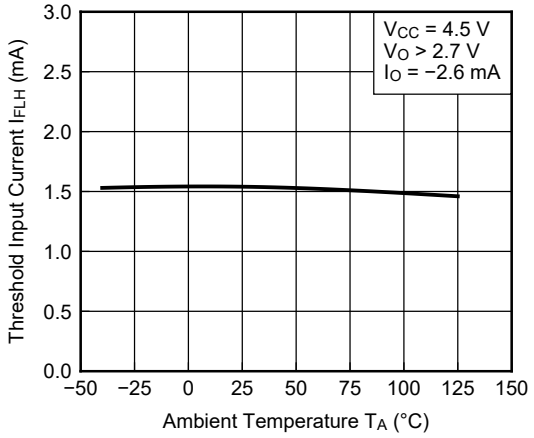

LOW LEVEL OUTPUT VOLTAGE vs. AMBIENT TEMPERATURE

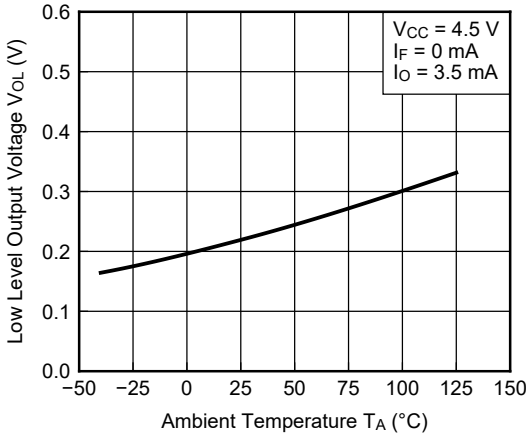

Remark The graphs indicate nominal characteristics.

TYPICAL CHARACTERISTICS (T_A = 25 °C, unless otherwise specified)

HIGH LEVEL OUTPUT VOLTAGE vs. AMBIENT TEMPERATURE

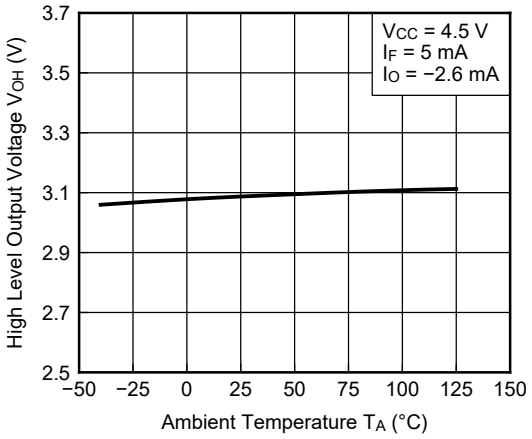

HIGH LEVEL OUTPUT VOLTAGE vs. AMBIENT TEMPERATURE

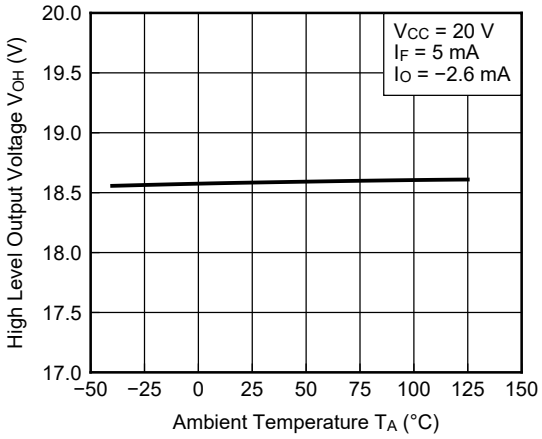

PROPAGATION DELAY TIME, PULSE WIDTH DISTORTION vs. AMBIENT TEMPERATURE

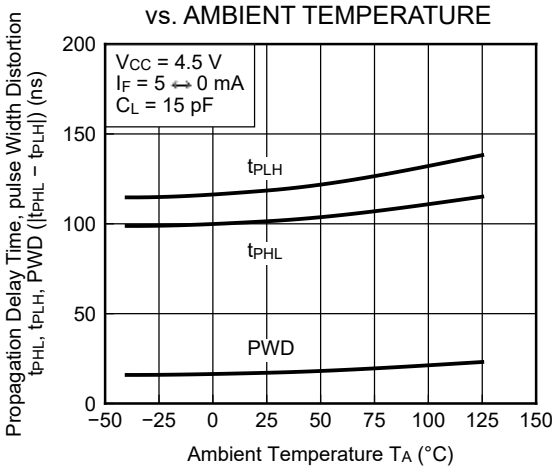

PROPAGATION DELAY TIME, PULSE WIDTH DISTORTION vs. FORWARD CURRENT

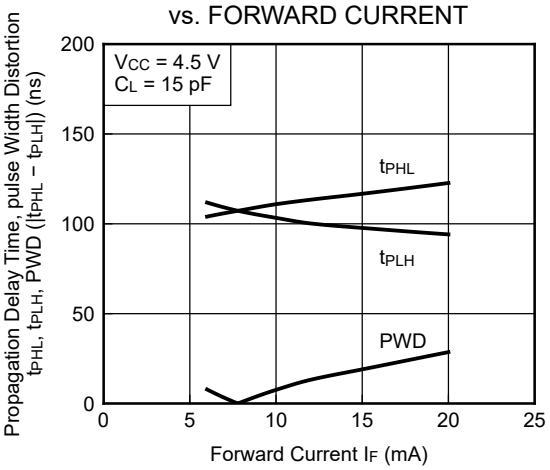

Remark The graphs indicate nominal characteristics.

TAPING SPECIFICATIONS (UNIT: mm)

Tape Direction

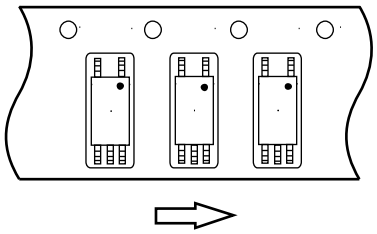

Direction of feed

Outline and Dimensions (Tape)

(Unit : mm)

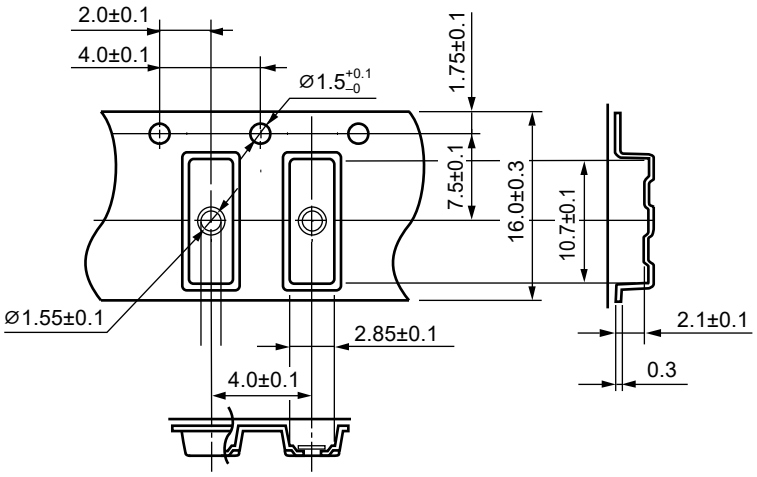

Outline and Dimensions (Reel)

(Unit : mm)

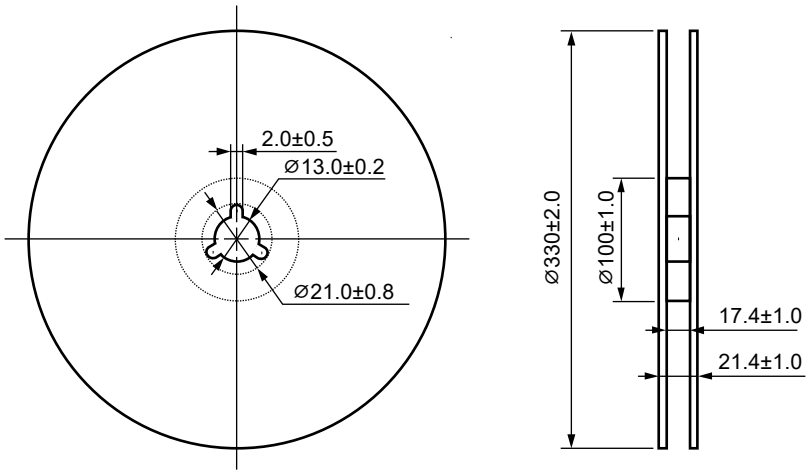

Packing: 3 500 pcs/reel

RECOMMENDED MOUNT PAD DIMENSIONS (UNIT: mm)

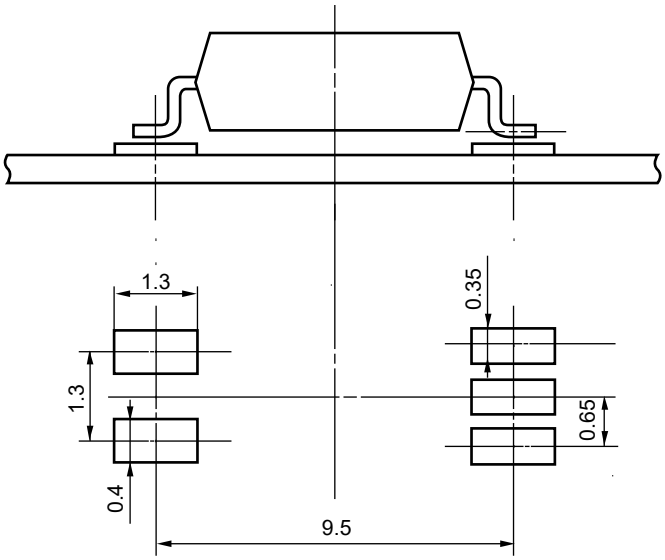

Remark All dimensions in this figure must be evaluated before use.

NOTES ON HANDLING

1. Recommended soldering conditions

(1) Infrared reflow soldering

- Peak reflow temperature 260 °C or below (package surface temperature)
- Time of peak reflow temperature 10 s or less
- Time of temperature higher than 220 °C 60 s or less
- Time to preheat temperature from 120 to 180 °C 120 ± 30 s
- Number of reflows Three
- Flux Rosin flux containing small amount of chlorine (The flux with a maximum chlorine content of 0.2 Wt% is recommended.)

Recommended Temperature Profile of Infrared Reflow

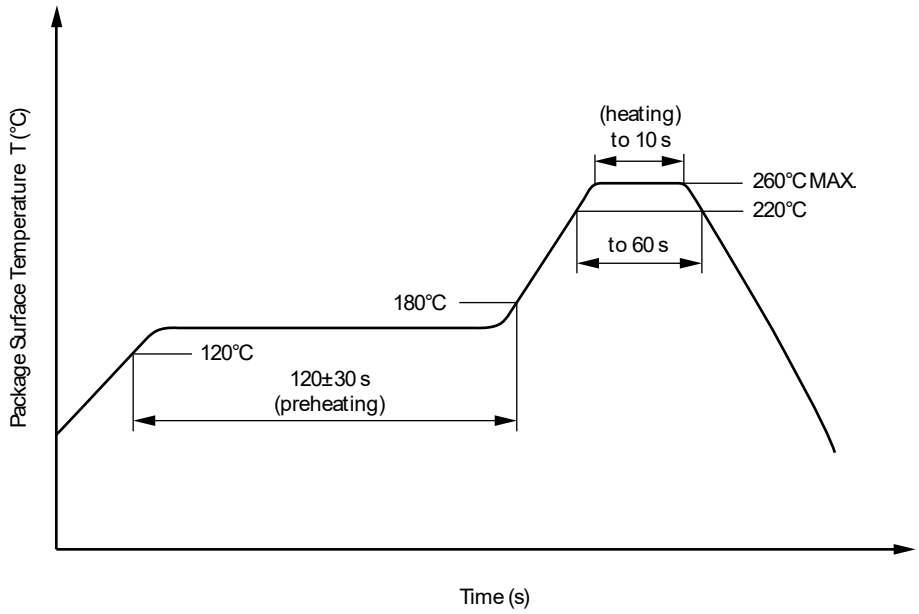

(2) Wave soldering

- Temperature 260 °C or below (molten solder temperature)
- Time 10 s or less
- Preheating conditions 120 °C or below (package surface temperature)
- Number of times One (Allowed to be dipped in solder including plastic mold portion.)
- Flux Rosin flux containing small amount of chlorine (The flux with a maximum chlorine content of 0.2 Wt% is recommended.)

(3) Soldering by Soldering Iron

- Peak temperature (lead part temperature) 350 °C or below
- Time (per one side) 3 s or less
- Flux Rosin flux containing small amount of chlorine (The flux with a maximum chlorine content of 0.2 Wt% is recommended.)
- Place 1.5 to 2.0 mm or more away from the root of the lead

(4) Cautions

- Flux cleaning Avoid cleaning with Freon- or halogen-based (chlorinated etc.) solvents.
- Fixing/Coating Do not use fixing agents or coatings containing halogen-based substances.

2. Cautions regarding noise

Be aware that when voltage is applied suddenly between the photocoupler's input and output at startup, the output transistor may enter the on state, even if the voltage is within the absolute maximum ratings.

USAGE CAUTIONS

1. This product is weak for static electricity by designed with high-speed integrated circuit so protect against static electricity when handling.
2. By-pass capacitor of more than 0.1 μF is used between V_{CC} and GND near device. Also, ensure that the distance between the leads of the photocoupler and capacitor is no more than 10 mm.
3. Avoid storage at a high temperature and high humidity.

SPECIFICATION OF VDE MARKS LICENSE DOCUMENT

Parameter	Symbol	Rating	Unit
Climatic test class (IEC 60068-1/DIN EN 60068-1)		40/125/21	
Dielectric strength maximum operating isolation voltage Test voltage (partial discharge test, procedure a for type test and random test) $V_m = 1.6 \times V_{IORM.}$, $q_{pd} < 5$ pC	 V_{IORM} V_m	 1 075 1 720	 V_{peak} V_{peak}
Test voltage (partial discharge test, procedure b for all devices) $V_m = 1.875 \times V_{IORM.}$, $q_{pd} < 5$ pC	V_m	2 016	V_{peak}
Highest permissible overvoltage	V_{IOTM}	8 000	V_{peak}
Degree of pollution (IEC 60664-1/DIN EN 60664-1 (VDE 0110-1))		2	
Comparative tracking index (IEC 60112/DIN EN 60112 (VDE 0303-11))	CTI	400	
Material group (IEC 60664-1/DIN EN 60664-1 (VDE 0110-1))		II	
Storage temperature range	T_{stg}	−40 to +150	°C
Operating temperature range	T_A	−40 to +125	°C
Isolation resistance, minimum value V_{I-O} = 500 V dc, T_A = 25 °C V_{I-O} = 500 V dc, T_A = maximum temperature of rating, at least 100 °C	 R_{I-O} MIN. R_{I-O} MIN.	 10^{12} 10^{11}	 Ω Ω
Safety maximum ratings (maximum permissible in case of fault, see thermal derating curve) Maximum ambient temperature Maximum input current Maximum output power dissipation Isolation resistance, minimum value at V_{I-O} = 500 V dc, $T_A = T_S$	 T_S I_{SI} P_{SO} R_{I-O} MIN.	 175 400 700 10^9	 °C mA mW Ω

Dependence of maximum safety ratings on ambient temperature

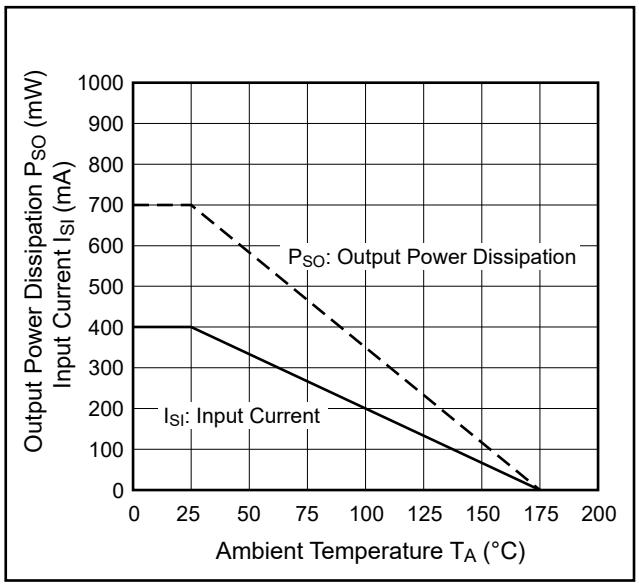

Method a) Destructive Test, Type and Sample Test

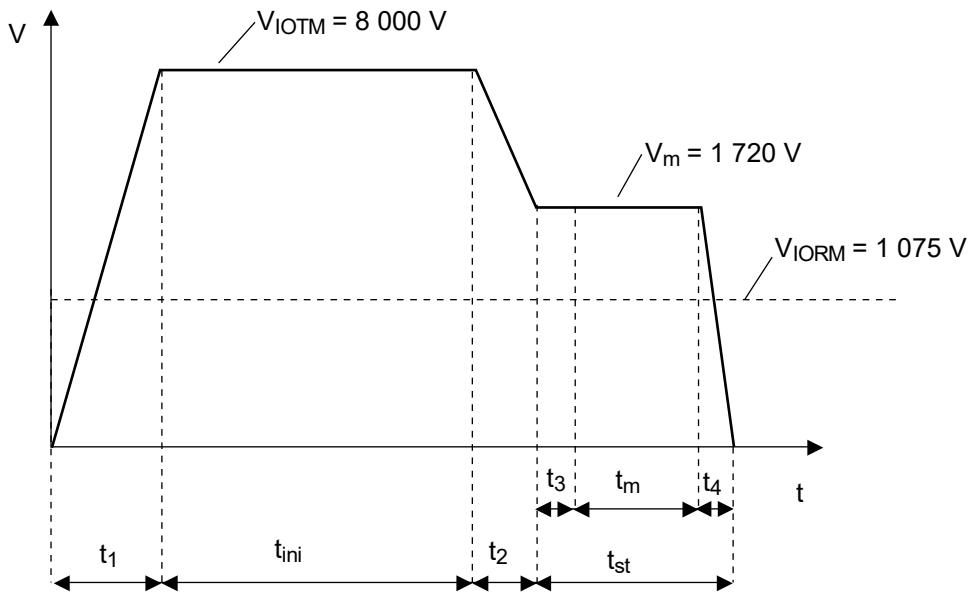

t_1, t_2 = 1 to 10 sec
t_3, t_4 = 1 sec
t_m = 10 sec
t_{st} = 12 sec
t_{ini} = 60 sec

Method b) Non-destructive Test, 100% Production Test

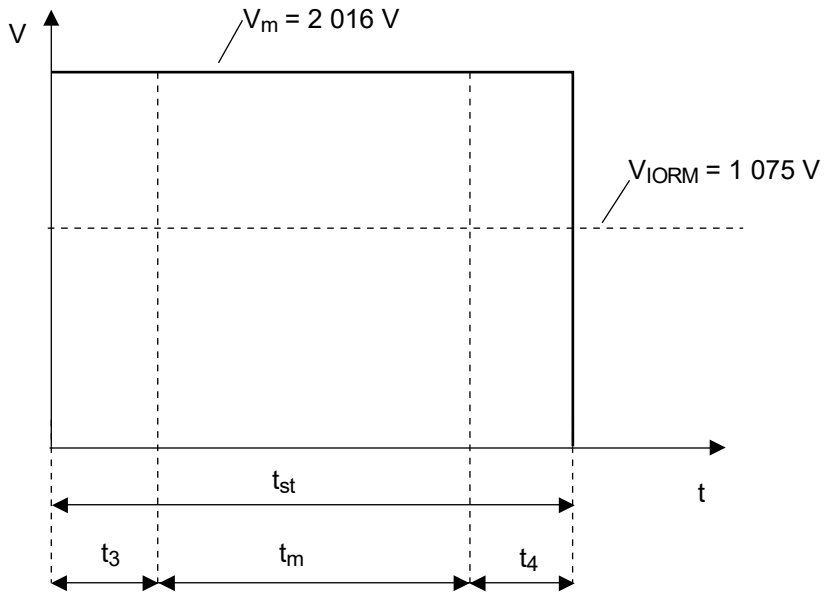

t_3, t_4 = 0.1 sec
t_m = 1.0 sec
t_{st} = 1.2 sec

Caution GaAs Products	This product uses gallium arsenide (GaAs). GaAs vapor and powder are hazardous to human health if inhaled or ingested, so please observe the following points. • Follow related laws and ordinances when disposing of the product. If there are no applicable laws and/or ordinances, dispose of the product as recommended below. 1. Commission a disposal company able to (with a license to) collect, transport and dispose of materials that contain arsenic and other such industrial waste materials. 2. Exclude the product from general industrial waste and household garbage, and ensure that the product is controlled (as industrial waste subject to special control) up until final disposal. • Do not burn, destroy, cut, crush, or chemically dissolve the product. • Do not lick the product or in any way allow it to enter the mouth.

All trademarks and registered trademarks are the property of their respective owners.

Notice

1. Descriptions of circuits, software and other related information in this document are provided only to illustrate the operation of semiconductor products and application examples. You are fully responsible for the incorporation or any other use of the circuits, software, and information in the design of your product or system. Renesas Electronics disclaims any and all liability for any losses and damages incurred by you or third parties arising from the use of these circuits, software, or information.
2. Renesas Electronics hereby expressly disclaims any warranties against and liability for infringement or any other claims involving patents, copyrights, or other intellectual property rights of third parties, by or arising from the use of Renesas Electronics products or technical information described in this document, including but not limited to, the product data, drawings, charts, programs, algorithms, and application examples.
3. No license, express, implied or otherwise, is granted hereby under any patents, copyrights or other intellectual property rights of Renesas Electronics or others.
4. You shall be responsible for determining what licenses are required from any third parties, and obtaining such licenses for the lawful import, export, manufacture, sales, utilization, distribution or other disposal of any products incorporating Renesas Electronics products, if required.
5. You shall not alter, modify, copy, or reverse engineer any Renesas Electronics product, whether in whole or in part. Renesas Electronics disclaims any and all liability for any losses or damages incurred by you or third parties arising from such alteration, modification, copying or reverse engineering.
6. Renesas Electronics products are classified according to the following two quality grades: “Standard” and “High Quality”. The intended applications for each Renesas Electronics product depends on the product’s quality grade, as indicated below.
   "Standard": Computers; office equipment; communications equipment; test and measurement equipment; audio and visual equipment; home electronic appliances; machine tools; personal electronic equipment; industrial robots; etc.
   "High Quality": Transportation equipment (automobiles, trains, ships, etc.); traffic control (traffic lights); large-scale communication equipment; key financial terminal systems; safety control equipment; etc.
   Unless expressly designated as a high reliability product or a product for harsh environments in a Renesas Electronics data sheet or other Renesas Electronics document, Renesas Electronics products are not intended or authorized for use in products or systems that may pose a direct threat to human life or bodily injury (artificial life support devices or systems; surgical implantations; etc.), or may cause serious property damage (space system; undersea repeaters; nuclear power control systems; aircraft control systems; key plant systems; military equipment; etc.). Renesas Electronics disclaims any and all liability for any damages or losses incurred by you or any third parties arising from the use of any Renesas Electronics product that is inconsistent with any Renesas Electronics data sheet, user’s manual or other Renesas Electronics document.
7. No semiconductor product is absolutely secure. Notwithstanding any security measures or features that may be implemented in Renesas Electronics hardware or software products, Renesas Electronics shall have absolutely no liability arising out of any vulnerability or security breach, including but not limited to any unauthorized access to or use of a Renesas Electronics product or a system that uses a Renesas Electronics product. RENESAS ELECTRONICS DOES NOT WARRANT OR GUARANTEE THAT RENESAS ELECTRONICS PRODUCTS, OR ANY SYSTEMS CREATED USING RENESAS ELECTRONICS PRODUCTS WILL BE INVULNERABLE OR FREE FROM CORRUPTION, ATTACK, VIRUSES, INTERFERENCE, HACKING, DATA LOSS OR THEFT, OR OTHER SECURITY INTRUSION (“Vulnerability Issues”). RENESAS ELECTRONICS DISCLAIMS ANY AND ALL RESPONSIBILITY OR LIABILITY ARISING FROM OR RELATED TO ANY VULNERABILITY ISSUES. FURTHERMORE, TO THE EXTENT PERMITTED BY APPLICABLE LAW, RENESAS ELECTRONICS DISCLAIMS ANY AND ALL WARRANTIES, EXPRESS OR IMPLIED, WITH RESPECT TO THIS DOCUMENT AND ANY RELATED OR ACCOMPANYING SOFTWARE OR HARDWARE, INCLUDING BUT NOT LIMITED TO THE IMPLIED WARRANTIES OF MERCHANTABILITY, OR FITNESS FOR A PARTICULAR PURPOSE.
8. When using Renesas Electronics products, refer to the latest product information (data sheets, user’s manuals, application notes, “General Notes for Handling and Using Semiconductor Devices” in the reliability handbook, etc.), and ensure that usage conditions are within the ranges specified by Renesas Electronics with respect to maximum ratings, operating power supply voltage range, heat dissipation characteristics, installation, etc. Renesas Electronics disclaims any and all liability for any malfunctions, failure or accident arising out of the use of Renesas Electronics products outside of such specified ranges.
9. Although Renesas Electronics endeavors to improve the quality and reliability of Renesas Electronics products, semiconductor products have specific characteristics, such as the occurrence of failure at a certain rate and malfunctions under certain use conditions. Unless designated as a high reliability product or a product for harsh environments in a Renesas Electronics data sheet or other Renesas Electronics document, Renesas Electronics products are not subject to radiation resistance design. You are responsible for implementing safety measures to guard against the possibility of bodily injury, injury or damage caused by fire, and/or danger to the public in the event of a failure or malfunction of Renesas Electronics products, such as safety design for hardware and software, including but not limited to redundancy, fire control and malfunction prevention, appropriate treatment for aging degradation or any other appropriate measures. Because the evaluation of microcomputer software alone is very difficult and impractical, you are responsible for evaluating the safety of the final products or systems manufactured by you.
10. Please contact a Renesas Electronics sales office for details as to environmental matters such as the environmental compatibility of each Renesas Electronics product. You are responsible for carefully and sufficiently investigating applicable laws and regulations that regulate the inclusion or use of controlled substances, including without limitation, the EU RoHS Directive, and using Renesas Electronics products in compliance with all these applicable laws and regulations. Renesas Electronics disclaims any and all liability for damages or losses occurring as a result of your noncompliance with applicable laws and regulations.
11. Renesas Electronics products and technologies shall not be used for or incorporated into any products or systems whose manufacture, use, or sale is prohibited under any applicable domestic or foreign laws or regulations. You shall comply with any applicable export control laws and regulations promulgated and administered by the governments of any countries asserting jurisdiction over the parties or transactions.
12. It is the responsibility of the buyer or distributor of Renesas Electronics products, or any other party who distributes, disposes of, or otherwise sells or transfers the product to a third party, to notify such third party in advance of the contents and conditions set forth in this document.
13. This document shall not be reprinted, reproduced or duplicated in any form, in whole or in part, without prior written consent of Renesas Electronics.
14. Please contact a Renesas Electronics sales office if you have any questions regarding the information contained in this document or Renesas Electronics products.

(Note1) “Renesas Electronics” as used in this document means Renesas Electronics Corporation and also includes its directly or indirectly controlled subsidiaries.
(Note2) “Renesas Electronics product(s)” means any product developed or manufactured by or for Renesas Electronics.

(Rev.5.0-1 October 2020)

Corporate Headquarters

TOYOSU FORESIA, 3-2-24 Toyosu,
Koto-ku, Tokyo 135-0061, Japan
www.renesas.com

Trademarks

Renesas and the Renesas logo are trademarks of Renesas Electronics Corporation. All trademarks and registered trademarks are the property of their respective owners.

Contact information

For further information on a product, technology, the most up-to-date version of a document, or your nearest sales office, please visit: www.renesas.com/contact/.

© 2025 Renesas Electronics Corporation. All rights reserved.