Description

The 8T49N281 has a fractional-feedback PLL that can be used as a jitter attenuator or frequency translator. It is equipped with six integer and two fractional output dividers, allowing the generation of up to 8 different output frequencies, ranging from 8kHz to 1GHz. Three of these frequencies are completely independent of each other and the inputs. The other five are related frequencies. The eight outputs may select among LVPECL, LVDS or LVCMOS output levels.

This functionality makes it ideal to be used in any frequency translation application, including 1G, 10G, 40G and 100G Synchronous Ethernet, OTN, and SONET/SDH, including ITU-T G.709 (2009) FEC rates. The device may also behave as a frequency synthesizer.

The 8T49N281 accepts up to two differential or single-ended input clocks and a crystal input. The PLL can lock to either input clock, but both input clocks must be related in frequency.

The device supports hitless reference switching between input clocks. The device monitors both input clocks for Loss of Signal (LOS). It generates an alarm when an input clock failure is detected. Automatic and manual hitless reference switching options are supported. LOS behavior can be set to support gapped or un-gapped clocks.

The 8T49N281 supports holdover with an initial accuracy of ±50ppB from the point where the loss of all applicable input reference(s) has been detected. It maintains a historical average operating point that may be returned to in holdover at a limited phase slope.

The device places no constraints on input to output frequency conversion, supporting all FEC rates, including the new revision of ITU-T Recommendation G.709 (2009), most with 0ppm conversion error.

The PLL has a register-selectable loop bandwidth from 0.5Hz to 512Hz.

Each output supports individual phase delay settings to allow output-output alignment.

The device supports Output Enable inputs and Lock, Holdover and LOS status outputs.

The device is programmable through an I^2C interface. It also supports I^2C master capability to allow the register configuration to be read from an external EEPROM.

Typical Applications

- OTN or SONET / SDH equipment Line cards (up to OC-192, and supporting FEC ratios)
- OTN de-mapping (Gapped Clock and DCO mode)
- Gigabit and Terabit IP switches / routers including support of Synchronous Ethernet
- Wireless base station baseband
- Data communications

Features

- Supports SDH/SONET and Synchronous Ethernet clocks including all FEC rate conversions
- Two differential outputs meet jitter limits for 100G Ethernet and STM-256/OC-768
  - <0.3ps RMS (including spurs): 12kHz to 20MHz
  - All outputs <0.5ps RMS (including spurs) 12kHz to 20MHz
- Operating modes: locked to input signal, holdover and free-run
- Initial holdover accuracy of ±50ppb
- Accepts two LVPECL, LVDS, LVHSTL, HCSL or LVCMOS input clocks
  - Accepts frequencies ranging from 8kHz up to 875MHz
  - Auto and manual input clock selection with hitless switching
  - Clock input monitoring, including support for gapped clocks
- Phase-Slope Limiting and Fully Hitless Switching options to control output phase transients
- Operates from a 10MHz to 40MHz fundamental-mode crystal
- Generates eight LVPECL /LVDS or sixteen LVCMOS output clocks
  - Output frequencies ranging from 8kHz up to 1.0GHz (diff)
  - Output frequencies ranging from 8kHz to 250MHz (LVCMOS)
- Four General Purpose I/O pins with optional support for status & control:
  - Four Output Enable control inputs may be mapped to any of the eight outputs
  - Lock, Holdover & Loss-of-Signal status outputs
- Open-drain Interrupt pin
- Programmable PLL bandwidth settings:
  - 0.5Hz, 1Hz, 2Hz, 4Hz, 8Hz, 16Hz, 32Hz, 64Hz, 128Hz, 256Hz or 512Hz
  - Optional Fast Lock function
- Programmable output phase delays in steps as small as 16ps
- Register programmable through I^2C or via external I^2C EEPROM
- Bypass clock paths for system tests
- Power supply modes

  V_{CC} / V_{CCA} / V_{CCO}
  3.3V / 3.3V / 3.3V
  3.3V / 3.3V / 2.5V
  3.3V / 3.3V / 1.8V (LVCMOS)
  2.5V / 2.5V / 3.3V
  2.5V / 2.5V / 2.5V
  2.5V / 2.5V / 1.8V (LVCMOS)
- Power down modes support consumption as low as 1.5W (see Power Dissipation and Thermal Considerations for details)
- -40°C to 85°C ambient operating temperature
- Package: 56QFN, lead-free RoHs (6)

© 2019 Renesas Electronics Corporation

8T49N281 Block Diagram

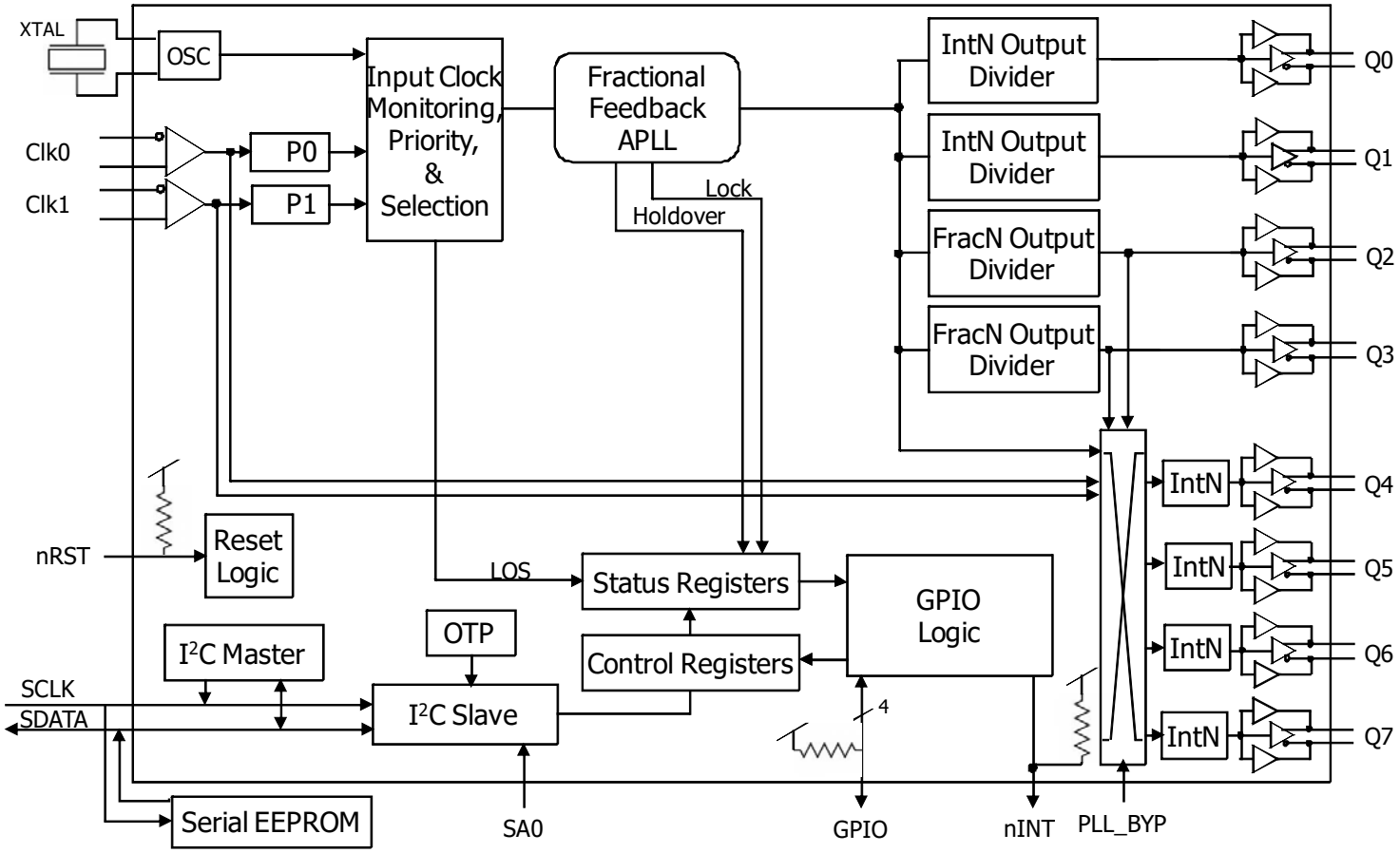

Figure 1. 8T49N281 Functional Block Diagram

Pin Assignment

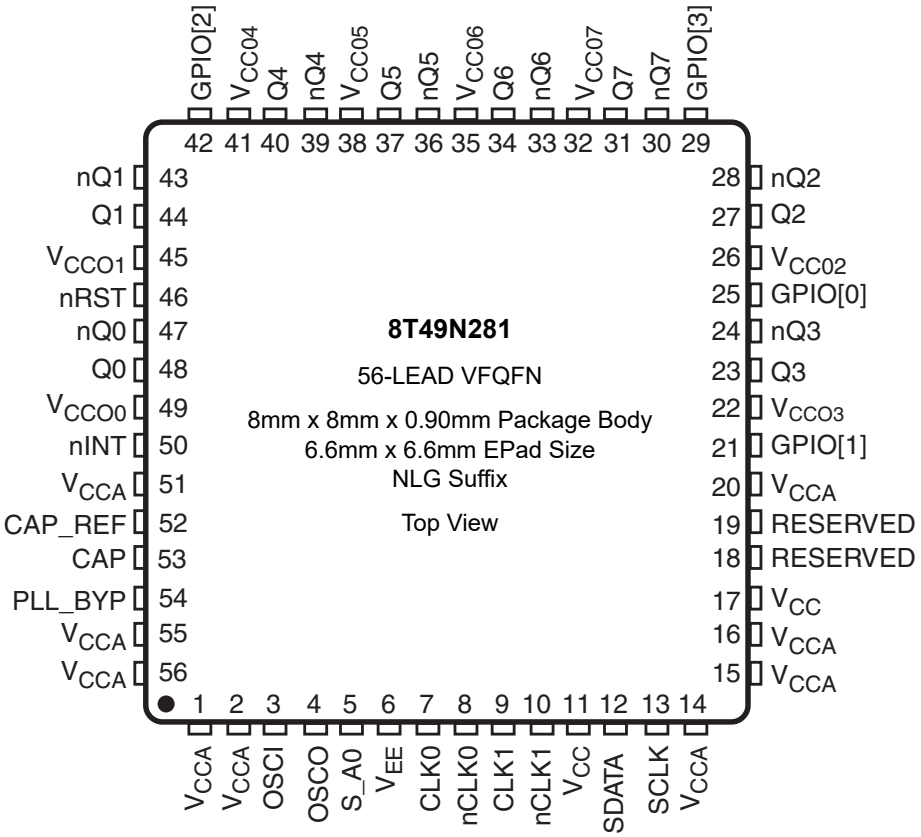

Figure 2. Pinout Drawing

Pin Description and Pin Characteristic Tables

Table 1. Pin Descriptions

Number	Name	Type		Description
3	OSCI	I		Crystal Input. Accepts a 10MHz-40MHz reference from a clock oscillator or a 12pF fundamental mode, parallel-resonant crystal. For proper device functionality, a crystal or external oscillator must be connected to this pin.
4	OSCO	O		Crystal Output. This pin must be connected to a crystal. If an oscillator is connected to OSCI, then this pin must be left unconnected.
5	S_A0	I	Pulldown	I^2C lower address bit A0.
12	SDATA	I/O	Pullup	I^2C interface bi-directional Data.
13	SCLK	I/O	Pullup	I^2C interface bi-directional Clock.
7	CLK0	I	Pulldown	Non-inverting differential clock input.
8	nCLK0	I	Pullup / Pulldown	Inverting differential clock input. $V_{CC}/2$ when left floating (set by the internal pullup and pulldown resistors.)
9	CLK1	I	Pulldown	Non-inverting differential clock input.
10	nCLK1	I	Pullup / Pulldown	Inverting differential clock input. $V_{CC}/2$ when left floating (set by the internal pullup and pulldown resistors.)
48, 47	Q0, nQ0	O	Universal	Output Clock 0. Please refer to the Output Drivers for more details.
44, 43	Q1, nQ1	O	Universal	Output Clock 1. Please refer to the Output Drivers for more details.
27, 28	Q2, nQ2	O	Universal	Output Clock 2. Please refer to the Output Drivers for more details.
23, 24	Q3, nQ3	O	Universal	Output Clock 3. Please refer to the Output Drivers for more details.
40, 39	Q4, nQ4	O	Universal	Output Clock 4. Please refer to the Output Drivers for more details.
37, 36	Q5, nQ5	O	Universal	Output Clock 5. Please refer to the Output Drivers for more details.
34, 33	Q6, nQ6	O	Universal	Output Clock 6. Please refer to the Output Drivers for more details.
31, 30	Q7, nQ7	O	Universal	Output Clock 7. Please refer to the Output Drivers for more details.
46	nRST	I	Pullup	Master Reset input. LVTTL / LVCMOS interface levels. 0 = All registers and state machines are reset to their default values 1 = Device runs normally
50	nINT	O	Open-drain with pullup	Interrupt output.
29, 42, 21, 25	GPIO[3:0]	I/O	Pullup	General-purpose input-outputs. LVTTL / LVCMOS Input levels Open-drain output. Pulled-up with 5.1kΩ resistor to V_{CC}.
54	PLL_BYP	I	Pulldown	Bypass Selection. Allow input references to bypass the PLL. LVTTL / LVCMOS interface levels.
6, ePad	V_{EE}	Power		Negative supply voltage. All V_{EE} pins and ePad must be connected before any positive supply voltage is applied.
11	V_{CC}	Power		Core and digital functions supply voltage.
17	V_{CC}	Power		Core and digital functions supply voltage.
2, 14, 15, 16, 20	V_{CCA}	Power		Analog functions supply voltage for core analog functions.
1, 51, 55, 56	V_{CCA}	Power		Analog functions supply voltage for analog functions associated with PLL.
49	V_{CCO0}	Power		High-speed output supply voltage for output pair Q0, nQ0.
45	V_{CCO1}	Power		High-speed output supply voltage for output pair Q1, nQ1.
26	V_{CCO2}	Power		High-speed output supply voltage for output pair Q2, nQ2.
22	V_{CCO3}	Power		High-speed output supply voltage for output pair Q3, nQ3.
41	V_{CCO4}	Power		High-speed output supply voltage for output pair Q4, nQ4.

Table 1. Pin Descriptions (Continued)

Number	Name	Type		Description
38	V_{CCO5}	Power		High-speed output supply voltage for output pair Q5, nQ5.
35	V_{CCO6}	Power		High-speed output supply voltage for output pair Q6, nQ6.
32	V_{CCO7}	Power		High-speed output supply voltage for output pair Q7, nQ7.
53 52	CAP, CAP_REF	Analog		PLL External Capacitance. A 0.1µF capacitance value across these pins is recommended.
18, 19	RESERVED	Reserved		Reserved pins.

NOTE: *Pullup* and *Pulldown* refer to internal input resistors. See Table 2, *Pin Characteristics,* for typical values.

Table 2. Pin Characteristics, $V_{CC} = V_{CCOX} = 3.3V±5\%$ or $2.5V±5\%$

Symbol	Parameter		Test Conditions	Minimum	Typical	Maximum	Units
C_{IN}	Input Capacitance; NOTE 1				3.5		pF
R_{PULLUP}	Internal Pullup Resistor	nRST, SDATA, SCLK			51		kΩ
		nINT			50		kΩ
		GPIO[3:0]			5.1		kΩ
$R_{PULLDOWN}$	Internal Pulldown Resistor				51		kΩ
C_{PD}	Power Dissipation Capacitance (per output pair)	LVCMOS Q[0:1], Q[4:7]	V_{CCOX} = 3.465V		14.5		pF
		LVCMOS Q[2:3]	V_{CCOX} = 3.465V		18.5		pF
		LVCMOS Q[0:1], Q[4:7]	V_{CCOX} = 2.625V		13		pF
		LVCMOS Q[2:3]	V_{CCOX} = 2.625V		17.5		pF
		LVCMOS Q[0:1], Q[4:7]	V_{CCOX} = 1.89V		12.5		pF
		LVCMOS Q[2:3]	V_{CCOX} = 1.89V		17		pF
		LVDS or LVPECL Q[0:1], Q[4:7]	V_{CCOx} = 3.465V or 2.625V		2		pF
		LVDS or LVPECL Q[2:3]	V_{CCOx} = 3.465V or 2.625V		4.5		pF
R_{OUT}	Output Impedance	GPIO [3:0]	Output HIGH		5.1		kΩ
			Output LOW		25		Ω
		LVCMOS Q[0:7], nQ[0:7]			20		Ω

NOTE: V_{CCOX} denotes: V_{CCO0}, V_{CCO1}, V_{CCO2}, V_{CCO3}, V_{CCO4}, V_{CCO5}, V_{CCO6}, V_{CCO7}.
NOTE 1: This specification does not apply to OSCI and OSCO pins.

Principles of Operation

The 8T49N281 can be locked to either of the input clocks and generate a wide range of synchronized output clocks.

It could be used for example in either the transmit or receive path of Synchronous Ethernet equipment.

The 8T49N281 accepts up to two differential input clocks ranging from 8kHz up to 875MHz. It generates up to 8 output clocks ranging from 8kHz up to 1.0GHz.

The PLL path within the 8T49N281 supports three states: Lock, Holdover and Free-run. Lock & holdover status may be monitored on register bits and pins. The PLL also supports automatic and manual hitless reference switching. In the locked state, the PLL locks to a valid clock input and its output clocks have a frequency accuracy equal to the frequency accuracy of the input clock. In the Holdover state, the PLL will output a clock which is based on the selected holdover behavior. The PLL within the 8T49N281 has an initial holdover frequency offset of ±50ppb. In the Free-run state, the PLL outputs a clock with the same frequency accuracy as the external crystal.

Upon power up, the PLL will enter Free-run state, in this state it generates output clocks with the same frequency accuracy as the external crystal. The 8T49N281 continuously monitors each input for activity (signal transitions).

In automatic reference switching, when an input clock has been validated the PLL will transition to the locked state. If the selected input clock fails and there are no other valid input clocks, the PLL will quickly detect that and go into holdover. In the Holdover state, the PLL will output a clock which is based on the selected holdover behavior. If the selected input clock fails and another input clock is available then the 8T49N281 will hitlessly switch to that input clock. The reference switch can be either revertive or non-revertive.

The device supports conversion of any input frequencies to three different, independent output frequencies on the Q0 and Q[2:3] outputs. Additionally, a further five output frequencies may be generated that are integer-related to the three independent frequencies. These additional five frequencies are on the Q1 and Q[4:7] outputs.

The 8T49N281 has a programmable loop bandwidth from 0.5Hz to 512Hz.

The device monitors all input clocks and generates an alarm when an input clock failure is detected.

The device supports programmable individual output phase adjustments in order to allow control of input to output phase adjustments and output to output phase alignment.

The device is programmable through an I^2C and may also autonomously read its register settings from an internal One-Time Programmable (OTP) memory or an external serial I^2C EEPROM.

Crystal Input

The crystal input on the 8T49N281 is capable of being driven by a parallel-resonant, fundamental mode crystal with a frequency range of 10MHz - 40MHz.

The oscillator input also supports being driven by a single-ended crystal oscillator or reference clock.

The initial holdover frequency offset is set by the device, but the long term drift depends on the quality of the crystal or oscillator attached to this port.

Bypass Path

For system test purposes, the PLL may be bypassed. When PLL_BYP is asserted the CLK0 input reference will be presented to the Q4 output dividers and the CLK1 Input reference will be presented to the Q5 output dividers.

Additionally, CLK0 or CLK1 may be used as a clock source for the output dividers of Q[4:7]. This may only be done for input frequencies of 250MHz or less.

Input Clock Selection

The 8T49N281 accepts up to two input clocks with frequencies ranging from 8kHz up to 875MHz. Each input can accept LVPECL, LVDS, LVHSTL, HCSL or LVCMOS inputs using 1.8V, 2.5V or 3.3V logic levels. To use LVCMOS inputs, refer to the Application Note, Wiring the Differential Input to Accept Single-Ended Levels for biasing instructions.

In Manual mode, only one of the inputs may be chosen and if that input fails the PLL will enter holdover.

Manual mode may be operated by directly selecting the desired input reference in the REFSEL register field. It may also operate via pin-selection of the desired input clock by selecting that mode in the REFSEL register field. In that case, GPIO[2] must be used as a Clock Select input (CSEL). CSEL = 0 will select the CLK0 input and CSEL = 1 will select the CLK1 input.

In addition, the crystal frequency may be passed directly to the output dividers for Q[4:7] to use as a reference.

Inputs do not support transmission of spread-spectrum clocking sources. Since this family is intended for high-performance applications, it will assume input reference sources to have stabilities of ±100ppm or better, except where gapped clock inputs are used.

If the PLL is working in automatic mode, then each of the input reference sources is assigned a priority of 1-2. At power-up or if the currently selected input reference fails, the PLL will switch to the highest priority input reference that is valid at that time (see Input Clock Monitor for details).

Automatic mode has two sub-options: revertive or non-revertive. In revertive mode, the PLL will switch to a reference with a higher priority setting whenever one becomes valid. In non-revertive mode the PLL remains with the currently selected source as long as it remains valid.

The clock input selection is based on the input clock priority set by the Clock Input Priority control registers. It is recommended that all input references be given different priority settings in the Clock Input Priority control register.

Input Clock Monitor

Each clock input is monitored for Loss of Signal (LOS). If no activity has been detected on the clock input within a user-selectable time period then the clock input is considered to be failed and an internal Loss-of-Signal status flag is set, which may cause an input switchover depending on other settings. The user-selectable time period has sufficient range to allow a gapped clock missing many consecutive edges to be considered a valid input.

User-selection of the clock monitor time-period is based on a counter driven by a monitor clock. The monitor clock is fixed at the frequency of the PLL's VCO divided by 8. With a VCO range of 3GHz - 4GHz, the monitor clock has a frequency range of 375MHz to 500MHz.

The monitor logic for each input reference will count the number of monitor clock edges indicated in the appropriate Monitor Control register. If an edge is received on the input reference being monitored, then the count resets and begins again. If the target edge count is reached before an input reference edge is received, then an internal soft alarm is raised and the count re-starts. During the soft alarm period, the PLL tracking will not be adjusted. If an input reference edge is received before the count expires for the second time, then the soft alarm status is cleared and the PLL will resume adjustments. If the count expires again without any input reference edge being received, then a Loss-of-Signal alarm is declared.

It is expected that for normal (non-gapped) clock operation, users will set the monitor clock count for each input reference to be slightly longer than the nominal period of that input reference. A margin of 2-3 monitor clock periods should give a reasonably quick reaction time and yet prevent false alarms.

For gapped clock operation, the user will set the monitor clock count to a few monitor clock periods longer than the longest expected clock gap period. The monitor count registers support 17-bit count values, which will support at least a gap length of two clock periods for any supported input reference frequency, with longer gaps being supported for faster input reference frequencies. Since gapped clocks usually occur on input reference frequencies above 100MHz, gap lengths of thousands of periods can be supported.

Using this configuration for a gapped clock, the PLL will continue to adjust while the normally expected gap is present, but will freeze once the expected gap length has been exceeded and alarm after twice the normal gap length has passed.

Once a LOS on any of the input clocks is detected, the appropriate internal LOS alarm will be asserted and it will remain asserted until that input clock returns and is validated once 8 rising edges have been received on that input reference. If another error condition on the same input clock is detected during the validation time then the alarm remains asserted and the validation time starts over.

Each LOS flag may also be reflected on one of the GPIO[3:0] outputs. Changes in status of any reference can also generate an interrupt if not masked.

Holdover

8T49N281 supports a small initial holdover frequency offset in non-gapped clock mode. When the input clock monitor is set to support gapped clock operation, this initial holdover frequency offset is indeterminate since the desired behavior with gapped clocks is for the PLL to continue to adjust itself even if clock edges are missing. In gapped clock mode, the PLL will not enter holdover until the input is missing for two LOS monitor periods.

The holdover performance characteristics of a clock are referred as its accuracy and stability, and are characterized in terms of the fractional frequency offset. The 8T49N281 can only control the initial frequency accuracy. Longer-term accuracy and stability are determined by the accuracy and stability of the external oscillator.

When the PLL loses all valid input references, it will enter the holdover state. In fast average mode, the PLL will initially maintain its most recent frequency offset setting and then transition at a rate dictated by its selected phase-slope limit setting to a frequency offset setting that is based on historical settings. This behavior is intended to compensate for any frequency drift that may have occurred on the input reference before it was detected to be lost.

The historical holdover value will have three options:

- Return to center of tuning range within the VCO band
- Instantaneous mode - the holdover frequency will use the DPLL current frequency 100msec before it entered holdover. The accuracy is shown in the AC Characteristics Table, Table 10.
- Fast average mode - an internal IIR (Infinite Impulse Response) filter is employed to get the frequency offset. The IIR filter gives a 3 dB attenuation point corresponding to nominal a period of 20 minutes. The accuracy is shown in the AC Characteristics Table, Table 10.

When entering holdover, the PLL will set a separate internal HOLD alarm internally. This alarm may be read from internal status register, appear on the appropriate GPIO pin and/or assert the nINT output.

While the PLL is in holdover, its frequency offset is now relative to the crystal input and so the output clocks will be tracing their accuracy to the local oscillator or crystal. At some point in time, depending on the stability & accuracy of that source, the clock(s) will have drifted outside of the limits of the holdover state and the system will be considered to be in a free-run state. Since this borderline is defined outside the PLL and dictated by the accuracy and stability of the external local crystal or oscillator, the 8T49N281 cannot know or influence when that transition occurs. As a result, the 8T49N281 will remain in the Holdover state internally.

Input to Output Clock Frequency

The 8T49N281 is designed to accept any frequency within its input range and generate eight different output frequencies that are independent from the input frequencies. The internal architecture of the device ensures that most translations will result in the exact output frequency specified. Where exact frequency translation is not possible, the frequency translation error will be minimized. Please contact IDT for configuration software or other assistance in determining if a desired configuration will be supported exactly.

Synthesizer Mode Operation

The device may also act as a frequency synthesizer with the PLL generating its operating frequency from just the crystal input. By setting the SYN_MODE register bit and setting the STATE[1:0] field to Freerun, no input clock references are required to generate the desired output frequencies.

Loop Filter and Bandwidth

When operating in synthesizer mode as described above, the 8T49N281 has a fixed loop bandwidth of approximately 200kHz. When operating in all other modes, the following information applies:

The 8T49N281 uses no external components to support a range of loop bandwidths: 0.5Hz, 1Hz, 2Hz, 4Hz, 8Hz, 16Hz, 32Hz, 64Hz, 128Hz, 256Hz or 512Hz.

The device supports three different loop bandwidth settings: acquisition, locked and tight-locked. These loop bandwidths are selected from the list of options described above. If enabled, the acquisition bandwidth is used while lock is being acquired to allow the PLL to “fast-lock”. Once locked the PLL will use the locked bandwidth setting. If the acquisition bandwidth setting is not used, the PLL will use the locked bandwidth setting at all times. The tight-locked setting may be used to lower phase noise in situations where the input reference only varies within a very narrow, register-programmed range.

Output Dividers

The 8T49N281 supports eight output dividers. Six of the output dividers will have IntN capability only (see Table 3) and the other two will support FracN division.

Integer Output Divider Programming (Q0, Q1, Q[4:7] only)

Each integer output divider block consists of two divider stages in a series to achieve the desired total output divider ratio. The first stage divider may be set to divide by 4, 5 or 6. The second stage of the divider may be bypassed (i.e. ÷1) or programmed to any even divider ratio from 2 to 131,070. The total divide ratios, settings and possible output frequencies are shown in Table 3.

In addition, the first divider stage for the Q[4:7] outputs support a bypass (i.e. ÷1) operation for some clock sources.

Table 3. Q[0:1], Q[4:7] Output Divide Ratios

1st-Stage Divide	2nd-Stage Divide	Total Divide	Minimum F_{OUT} MHz	Maximum F_{OUT} MHz
4	1	4	750	1000
5	1	5	600	800
6	1	6	500	666.7
4	2	8	375	500
5	2	10	300	400
6	2	12	250	333.3
4	4	16	187.5	250
5	4	20	150	200
6	4	24	125	166.7
...				
4	131,070	524,280	0.0057	0.0076
5	131,070	655,350	0.0046	0.0061
6	131,070	786,420	0.0038	0.0051

NOTE: Above frequency ranges for Q[4:7] apply when driven directly from the PLL.

Fractional Output Divider Programming (Q2, Q3 only)

For the FracN output dividers Q2, Q3, the output divide ratio is given by:

Output Divide Ratio = (N.F)x2

N = Integer Part: 4, 5, ...(2^{18}-1)

F = Fractional Part: [0, 1, 2, ...(2^{28}-1)]/(2^{28})

For integer operation of these output dividers, N = 3 is also supported.

Output Divider Frequency Sources

Output dividers associated with the Q[0:3] outputs take their input frequency directly from the PLL.

Output dividers associated with the Q[4:7] outputs can take their input frequencies from the PLL, Q2 or Q3 output dividers, CLK0 or CLK1 input reference frequency or the crystal frequency.

Output Banks

Outputs of the 8T49N281 are divided into three banks for purposes of output skew measurement:

- Q0, nQ0, Q1, nQ1
- Q4, nQ4, Q5, nQ5
- Q6, nQ6, Q7, nQ7

Output Phase Control on Switchover

When the 8T49N281 switches between input references or enters or leaves the holdover state, there are two options on how the output phase can be controlled in these events: phase-slope limiting or fully hitless switching (sometimes called phase build-out) may be selected. The SWMODE bit selects which behavior is to be followed.

If fully hitless switching is selected, then the output phase will remain unchanged under any of these conditions. Note that fully hitless switching is not supported when external loopback is being used. Fully hitless switching should not be used unless all input references are in the same clock domain. Note that use of this mode may prevent an output frequency and phase from being able to trace its alignment back to a primary reference source.

If phase-slope limiting is selected, then the output phase will adjust from its previous value until it is tracking the new condition at a rate dictated by the SLEW[1:0] bits. Phase-slope limiting should be used if all input references are not in the same clock domain or users wish to retain traceability to a primary reference source.

Output Phase Alignment

The device has a programmable output to output phase alignment for each of the eight output dividers. After power-up and the PLL has achieved lock, the device will be in a state where the outputs are synchronized with a deterministic offset relative to each other.After synchronization, the output alignment will depend on the particular configuration of each output according to the following rules. The step size is defined as the period of the clock to that divider:

1) Only outputs derived from the same source will be aligned with each other. 'Source' means the reference selected to drive the output divider as controlled by the CLK_SELn bit for each output.

2) For integer dividers (Q0, Q1, Q[4:7]) when both divider stages are active, edges are aligned. This case is used as a baseline to compare the other cases here.

3) For integer dividers where the 1st-stage divider is bypassed (only Q4-Q7 support this), coarse delay adjustments can't be performed. The output phase will be one step earlier than in Case 2.

4) Fractional output dividers (Q2 or Q3) do not guarantee any specific phase on power-up or after a synchronization event.

5) Integer dividers using Q2 or Q3 as a source (Q[4:7] support this option) will be aligned to their source divider's output (Q2 or Q3). Note that the output skews described above are not included in any of the phase adjustments described here.

Once the device is in operation, the outputs may have their phase adjustments re-synced in one of two ways:

1) If the PLL becomes unlocked, the coarse phase adjustments will be reset and the fine phase adjustments will be re-loaded once it becomes locked again.

2) Toggling of PLL_SYN bit may also be used to force a re-sync / re-load for the outputs.

The user may apply adjustments that are proportional to the period of the clock source each output divider is operating from. For example, if the divider associated with Output Q3 is running off the PLL, which has a VCO frequency of 4GHz, then the appropriate period would be 250ps. The output phase may be adjusted in these steps across the full period of the output.

- Coarse Adjustment: all Output Dividers may have their phase adjusted in steps of the source clock period. For example a 4GHz VCO gives a step size of 250ps. The user may request an adjustment of phase of up to 31 steps using a single register write. The phase will be adjusted by lengthening the period of the output by 250ps at a time. This process will be repeated every four output clock periods until the full requested adjustment has been achieved. A busy signal will remain asserted in the phase delay register until the requested adjustment is complete. Then a further adjustment may be setup and triggered by toggling the trigger bit.
- Fine Adjustment: For the Fractional Output Dividers associated with the Q2 and Q3 outputs, the phase of those outputs may be further adjusted with a granularity of 1/16th of the VCO period. For example a 4GHz VCO frequency gives a granularity of 16ps. This is performed by directly writing the required offset (from the nominal rising edge position) in units of 1/16th of the output period into a register. Then the PLL_SYN bit must be toggled to load the new value. Note that toggling this bit will clear all Coarse Delays for all outputs associated with the PLL, so Fine Delays should be set first. The output will then jump directly to that new offset value. For this reason, this adjustment should be made as the output is initially programmed or in Hi-Z.

Each output has the capability of being inverted (180 degree phase shift).

Jitter and Wander Tolerance

The 8T49N281 can be used as a line card device and therefore is expected to tolerate the jitter and wander output of a timing card PLL (e.g 82V3390).

Output Drivers

The Q[0:7] clock outputs are provided with register-controlled output drivers. By selecting the output drive type in the appropriate register, any of these outputs can support LVCMOS, LVPECL or LVDS logic levels.

The operating voltage ranges of each output is determined by its independent output power pin (V_{CCO}) and thus each can have different output voltage levels. Output voltage levels of 2.5V or 3.3V are supported for differential operation and LVCMOS operation. In addition, the LVCMOS output operation supports 1.8V (V_{CCO}).

Each output may be enabled or disabled by register bits and/or GPIO pins configured as Output Enables. The outputs will be enabled if the register bit and the associated OE pin are both asserted (high). When disabled an output will be in a high impedance state.

LVCMOS Operation

When a given output is configured to provide LVCMOS levels, then both the Q and nQ outputs will toggle at the selected output frequency. All the previously described configuration and control apply equally to both outputs. Frequency, phase alignment, voltage levels and enable / disable status apply to both the Q and nQ pins. When LVCMOS levels are selected, the Q and nQ outputs can be selected to be phase-aligned with each other or inverted relative to one another. Phase-aligned outputs will have increased simultaneous switching currents which can negatively affect phase noise performance and power consumption. It is recommended that use of this selection be kept to a minimum.

Power-Saving Modes

To allow the device to consume the least power possible for a given application, the following functions are included under register control:

- Any unused output, including all output divider and phase adjustment logic, can be individually powered-off.
- Clock gating on logic that is not being used.

Status / Control Signals and Interrupts

General-Purpose I/Os & Interrupts

The 8T49N281 provides four General Purpose Input / Output (GPIO) pins for miscellaneous status & control functions. Each GPIO may be configured as an input or an output. Each GPIO may be directly controlled from register bits or be used as a predefined function as shown in Table 4. Note that the default state prior to configuration being loaded from internal OTP or external EEPROM will be to set each GPIO to function as an Output Enable.

Table 4. GPIO Configuration[1]

	Configured as Input				Configured as Output	
	Fixed Function					
GPIO Pin	Output Enable (default)	Output Enable	Clock Select	General Purpose	Fixed Function	General Purpose
3	OE[3]	OE[7]	-	GPI[3]	LOS[1]	GPO[3]
2	OE[2]	OE[6]	CSEL	GPI[2]	LOS[0]	GPO[2]
1	OE[1]	OE[5]	-	GPI[1]	HOLD	GPO[1]
0	OE[0]	OE[4]	-	GPI[0]	LOL	GPO[0]

NOTE1. Refer to Register Descriptions section for additional details.
OE[x]: Output Enable Control for output Qx, nQx. Logic-high enables the output pair.
GPI[x]: General Purpose Input. Logic state on GPIO[x] pin is directly reflected in GPI[x] register.
LOS[x]: Loss-of-Signal Status Flag for Input Reference x. Logic-high indicates input reference failure.
GPO[x]: General Purpose Output. Logic state is determined by value written in register GPO[x].
CSEL: Manual Clock Select Input for PLL. Logic-high selects differential clock input 1 (CLK1).
HOLD: Holdover Status Flag for Digital PLL. Logic-high indicates digital PLL in holdover status.
LOL: Loss-of-Lock Status Flag for Digital PLL. Logic-high indicates digital PLL not locked.

If used in the Fixed Function mode of operation, the GPIO bits will reflect the real-time status of their respective status bits as shown in Table 4. Note that the LOL signal represents the lock status of the PLL. It does not account for the process of synchronization of the output dividers associated with that PLL. The output dividers programmed to operate from that PLL will automatically go through a re-synchronization process when the PLL locks or re-locks or if the user triggers a re-sync manually via register bit PLL_SYN. This synchronization process may result in a period of instability on the affected outputs for a duration of up to 350ns after the re-lock (LOL de-asserts) or the PLL_SYN bit is de-asserted.

Interrupt Functionality

Interrupt functionality includes an interrupt status flag for the PLL Loss-of-Lock Status (LOL), PLL Holdover Status (HOLD) and Input Reference Status (LOS[1:0]) that is set whenever there is an alarm on any of those signals. The Status Flag will remain set until the alarm has been cleared and a '1' has been written to the Status Flag's register location or if a reset occurs. Each Status Flag will also have an Interrupt Enable bit that will determine if that Status Flag is allowed to cause the Interrupt Status to be affected (enabled) or not (disabled). All Interrupt Enable bits will be in the disabled state after reset. The Device Interrupt Status flag and nINT output pin are asserted if any of the enabled Interrupt Status flags are set.

Device Hardware Configuration

The 8T49N281 supports an internal One-Time Programmable (OTP) memory that can be pre-programmed at the factory with one complete device configuration. If the device is set to read a configuration from an external, serial EEPROM, then the values read will overwrite the OTP-defined values.

This configuration can be over-written using the serial interface once reset is complete. Any configuration written via the programming interface needs to be re-written after any power cycle or reset. Please contact IDT if a specific factory-programmed configuration is desired.

Device Start-up & Reset Behavior

The 8T49N281 has an internal power-up reset (POR) circuit and a Master Reset input pin nRST. If either is asserted, the device will be in the Reset State.

For highly programmable devices, it's common practice to reset the device immediately after the initial power-on sequence. IDT recommends connecting the nRST input pin to a programmable logic source for optimal functionality. It is recommended that a minimum pulse width of 10ns be used to drive the nRST input pin.

While in the reset state (nRST input asserted or POR active), the device will operate as follows:

- All registers will return to & be held in their default states as indicated in the applicable register description.
- All internal state machines will be in their reset conditions.
- The serial interface will not respond to read or write cycles.
- The GPIO signals will be configured as OE[3:0] inputs.
- All clock outputs will be disabled.
- All interrupt status and Interrupt Enable bits will be cleared, negating the nINT signal.

Upon the latter of the internal POR circuit expiring or the nRST input negating, the device will exit reset and begin self-configuration.

The device will load an initial block of its internal registers using the configuration stored in the internal One-Time Programmable (OTP) memory. Once this step is complete, the 8T49N281 will check the register settings to see if it should load the remainder of its configuration from an external I^2C EEPROM at a defined address or continue loading from OTP. See the section on I^2C Boot Initialization for details on how this is performed.

Once the full configuration has been loaded, the device will respond to accesses on the serial port and will attempt to lock the PLL to the selected source and begin operation. Once the PLL is locked, all the outputs derived from it will be synchronized and output phase adjustments can then be applied if desired.

Serial Control Port Description

Serial Control Port Configuration Description

The device has a serial control port capable of responding as a slave in an I^{2}C compatible configuration to allow access to any of the internal registers for device programming or examination of internal status. All registers are configured to have default values. See the specifics for each register for details.

The device has the additional capability of becoming a master on the I^{2}C bus only for the purpose of reading its initial register configurations from a serial EEPROM on the I^{2}C bus. Writing of the configuration to the serial EEPROM must be performed by another device on the same I^{2}C bus or pre-programmed into the device prior to assembly.

I^{2}C Mode Operation

The I^{2}C interface is designed to fully support v1.2 of the I^{2}C Specification for Normal and Fast mode operations. The device acts as a slave device on the I^{2}C bus at 100kHz or 400kHz using the address defined in the Serial Interface Control register (0006h), as modified by the S_A0 input pin setting. The interface accepts byte-oriented block write and block read operations. Two address bytes specify the register address of the byte position of the first register to write or read. Data bytes (registers) are accessed in sequential order from the lowest to the highest byte (most significant bit first). Read and write block transfers can be stopped after any complete byte transfer. During a write operation, data will not be moved into the registers until the STOP bit is received, at which point, all data received in the block write will be written simultaneously.

For full electrical I^{2}C compliance, it is recommended to use external pull-up resistors for SDATA and SCLK. The internal pull-up resistors have a size of 51kΩ typical.

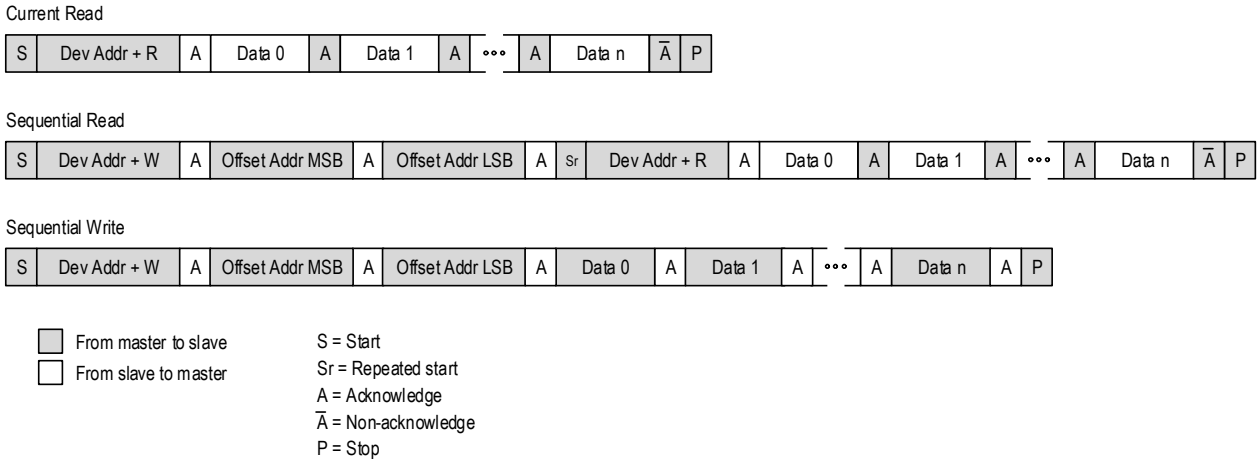

Figure 3. I^{2}C Slave Read and Write Cycle Sequencing

I^{2}C Master Mode

When operating in I^{2}C mode, the 8T49N281 has the capability to become a bus master on the I^{2}C bus for the purposes of reading its configuration from an external I^{2}C EEPROM. Only a block read cycle will be supported.

As an I^{2}C bus master, the 8T49N281 will support the following functions:

- 7-bit addressing mode
- Base address register for EEPROM
- Validation of the read block via CCITT-8 CRC check against value stored in last byte (E0h) of EEPROM
- Support for 100kHz and 400kHz operation with speed negotiation. If bit d0 is set at Byte address 05h in the EEPROM, this will shift from 100kHz operation to 400kHz operation.
- Support for 1- or 2-byte addressing mode
- Master arbitration with programmable number of retries
- Fixed-period cycle response timer to prevent permanently hanging the I^{2}C bus.
- Read will abort with an alarm (BOOTFAIL) if any of the following conditions occur: Slave NACK, Arbitration Fail, Collision during Address Phase, CRC failure, Slave Response time-out

The 8T49N281 will not support the following functions:

- I^{2}C General Call
- Slave clock stretching
- I^{2}C Start Byte protocol
- EEPROM Chaining
- CBUS compatibility
- Responding to its own slave address when acting as a master
- Writing to external I^{2}C devices including the external EEPROM used for booting

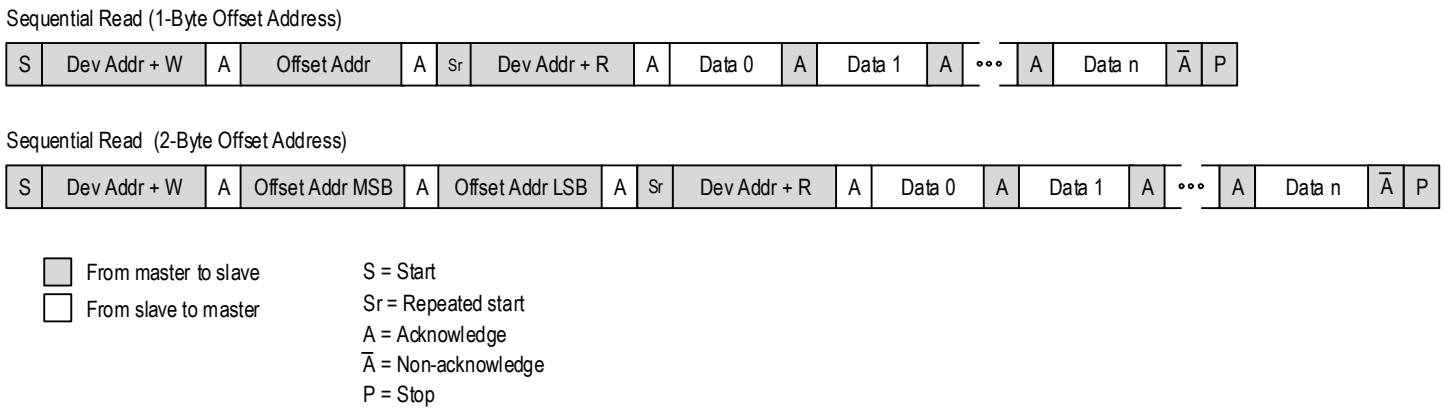

Figure 4. I²C Master Read Cycle Sequencing

I²C Boot-up Initialization Mode

If enabled (via the BOOT_EEP bit in the Startup register), once the nRST input has been deasserted (high) and its internal power-up reset sequence has completed, the device will contend for ownership of the I²C bus to read its initial register settings from a memory location on the I²C bus. The address of that memory location is kept in non-volatile memory in the Startup register. During the boot-up process, the device will not respond to serial control port accesses. Once the initialization process is complete, the contents of any of the device's registers can be altered. It is the responsibility of the user to make any desired adjustments in initial values directly in the serial bus memory.

If a NACK is received to any of the read cycles performed by the device during the initialization process, or if the CRC does not match the one stored in address E0h of the EEPROM the process will be aborted and any uninitialized registers will remain with their default values. The BOOTFAIL bit (021Eh) in the Global Interrupt Status register will also be set in this event.

If the BOOTFAIL bit is set, then the LOL indicator will be set.

Contents of the EEPROM should be as shown in Table 5.

Table 5. External Serial EEPROM Contents

EEPROM Offset (Hex)	Contents							
	D7	D6	D5	D4	D3	D2	D1	D0
00	1	1	1	1	1	1	1	1
01	1	1	1	1	1	1	1	1
02	1	1	1	1	1	1	1	1
03	1	1	1	1	1	1	1	1
04	1	1	1	1	1	1	1	1
05	1	1	1	1	1	1	1	Serial EEPROM Speed Select 0 = 100kHz 1 = 400kHz
06	1	8T49N281 Device I²C Address [6:2]					0	1
07	0	0	0	0	0	0	0	0
08 - DF	Desired contents of Device Registers 08h - DFh							
E0	Serial EEPROM CRC							
E1 - FF	Unused							

Register Descriptions

Table 6A. Register Blocks

Register Ranges Offset (Hex)	Register Block Description
0000 - 0001	Startup Control Registers
0002 - 0005	Device ID Control Registers
0006 - 0007	Serial Interface Control Registers
0008 - 003A	Digital PLL Control Registers
003B - 006D	Reserved
006E - 0076	GPIO Control Registers
0077 - 00AB	Output Clock Control Registers
00AC - 00AF	Analog PLL Control Registers
00B0 - 00B3	Reserved
00B4 - 00B8	Power-Down Control Registers
00B9 - 00C6	Input Monitor Control Registers
00C7 - 00C8	Interrupt Enable Registers
00C9 - 01FF	Reserved
0200 - 0203	Interrupt Status Registers
0204	Output Phase Adjustment Status Register
0205 - 020E	Digital PLL Status Registers
020F - 0218	Reserved
0219	General-Purpose Input Status Register
021A - 021F	Global Interrupt and Boot Status Register
0220 - 03FF	Reserved

Table 6B. Startup Control Register Bit Field Locations and Descriptions

Startup Control Register Block Field Locations								
Address (Hex)	**D7**	**D6**	**D5**	**D4**	**D3**	**D2**	**D1**	**D0**
0000	EEP_RTY[4:0]					Rsvd	nBOOT_OTP	nBOOT_EEP
0001	EEP_A15	EEP_ADDR[6:0]						

Startup Control Register Block Field Descriptions			
Bit Field Name	**Field Type**	**Default Value**	**Description**
EEP_RTY[4:0]	R/W	00001b	Select number of times arbitration for the I^2C bus to read the serial EEPROM will be retried before being aborted. Note that this number does not include the original try.
nBOOT_OTP	R/W	NOTE 1	Internal One-Time Programmable (OTP) memory usage on power-up: 0 = Load power-up configuration from OTP 1 = Only load 1st eight bytes from OTP
nBOOT_EEP	R/W	NOTE 1	External EEPROM usage on power-up: 0 = Load power-up configuration from external serial EEPROM (overwrites OTP values) 1 = Don't use external EEPROM
EEP_A15	R/W	NOTE 1	Serial EEPROM supports 15-bit addressing mode (multiple pages).
EEP_ADDR[6:0]	R/W	NOTE 1	I^2C base address for serial EEPROM.
Rsvd	R/W	-	Reserved. Always write 0 to this bit location. Read values are not defined.

NOTE 1: These values are specific to the device configuration 'dash-code'. Please refer to the *FemtoClock NG Universal Frequency Translator Ordering Product Information guide* for exact default values.

Table 6C. Device ID Control Register Bit Field Locations and Descriptions

Device ID Register Control Block Field Locations								
Address (Hex)	**D7**	**D6**	**D5**	**D4**	**D3**	**D2**	**D1**	**D0**
0002	REV_ID[3:0]				DEV_ID[15:12]			
0003	DEV_ID[11:4]							
0004	DEV_ID[3:0]				DASH_CODE[10:7]			
0005	DASH_CODE[6:0]							1

Device ID Control Register Block Field Descriptions			
Bit Field Name	**Field Type**	**Default Value**	**Description**
REV_ID[3:0]	R/W	0010b	Device revision.
DEV_ID[15:0]	R/W	0602h	Device ID code.
DASH_CODE [10:0]	R/W	NOTE 1	Device Dash Code: Decimal value assigned by IDT to identify the configuration loaded at the factory. May be over-written by users at any time. Refer to *FemtoClock NG Universal Frequency Translator Ordering Product Information guide* to identify major configuration parameters associated with this Dash Code value.

NOTE 1: These values are specific to the device configuration 'dash-code'. Please refer to the *FemtoClock NG Universal Frequency Translator Ordering Product Information guide* for exact default values.

Table 6D. Serial Interface Control Register Bit Field Locations and Descriptions

Serial Interface Control Block Field Locations								
Address (Hex)	**D7**	**D6**	**D5**	**D4**	**D3**	**D2**	**D1**	**D0**
0006	Rsvd	UFTADD[6:2]					UFTADD[1]	UFTADD[0]
0007	Rsvd							1

Device ID Control Register Block Field Descriptions			
Bit Field Name	**Field Type**	**Default Value**	**Description**
UFTADD[6:2]	R/W	NOTE 1	Configurable portion of I^2C Base Address (bits 6:2) for this device.
UFTADD[1]	R/O	0b	I^2C Base Address bit 1. This bit is fixed as 0.
UFTADD[0]	R/O	0b	I^2C Base Address bit 0. This address bit reflects the status of the S_A0 external input pin. See Table 1, Pin Descriptions.
Rsvd	R/W	-	Reserved. Always write 0 to this bit location. Read values are not defined.

NOTE 1: These values are specific to the device configuration 'dash-code'. Please refer to the *FemtoClock NG Universal Frequency Translator Ordering Product Information guide* for exact default values.

Table 6E. Digital PLL Input Control Register Bit Field Locations and Descriptions

Digital PLL Input Control Register Block Field Locations								
Address (Hex)	**D7**	**D6**	**D5**	**D4**	**D3**	**D2**	**D1**	**D0**
0008	REFSEL[2:0]			FBSEL[2:0]			RVRT	SWMODE
0009	11		10		PRI_1[1:0]		PRI_0[1:0]	
000A	1	1	REFDIS_1	REFDIS_0	Rsvd	Rsvd	STATE0[1:0]	
000B	Rsvd			PRE_0[20:16]				
000C	PRE_0[15:8]							
000D	PRE_0[7:0]							
000E	Rsvd			PRE_1[20:16]				
000F	PRE_1[15:8]							
0010	PRE_1[7:0]							
0011	Rsvd			Rsvd				
0012	Rsvd							
0013	Rsvd							
0014	Rsvd			Rsvd				
0015	Rsvd							
0016	Rsvd							

Digital PLL Input Control Register Block Field Descriptions			
Bit Field Name	**Field Type**	**Default Value**	**Description**
REFSEL[2:0]	R/W	000b	Input reference selection for Digital PLL: 000 = Automatic selection 001 = Manual selection by GPIO inputs 010 through 011 = Reserved 100 = Force selection of Input Reference 0 101 = Force selection of Input Reference 1 110 = Do not use 111 = Do not use
FBSEL[2:0]	R/W	000b	Feedback mode selection for Digital PLL: 000 through 011 = internal feedback divider 100 = external feedback from Input Reference 0 101 = external feedback from Input Reference 1 110 = do not use 111 = do not use
RVRT	R/W	1b	Automatic switching mode for Digital PLL: 0 = non-revertive switching 1 = revertive switching
SWMODE	R/W	1b	Controls how Digital PLL adjusts output phase when switching between input references: 0 = Absorb any phase differences between old & new input references 1 = Track to follow new input reference's phase using phase-slope limiting
PRI_0[1:0]	R/W	00b	Switchover priority for Input Reference 0 when used by Digital PLL: 00 = 1st priority 01 = 2nd priority 10 = do not use 11 = do not use

Digital PLL Input Control Register Block Field Descriptions			
Bit Field Name	**Field Type**	**Default Value**	**Description**
PRI_1[1:0]	R/W	01b	Switchover priority for Input Reference 1 when used by Digital PLL: 00 = 1st priority 01 = 2nd priority 10 = do not use 11 = do not use
REFDIS_0	R/W	0b	Input Reference 0 Switching Selection Disable for Digital PLL: 0 = Input Reference 0 is included in the switchover sequence for Digital PLL 1 = Input Reference 0 is not included in the switchover sequence for Digital PLL
REFDIS_1	R/W	0b	Input Reference 1 Switching Selection Disable for Digital PLL: 0 = Input Reference 1 is included in the switchover sequence for Digital PLL 1 = Input Reference 1 is not included in the switchover sequence for Digital PLL
STATE0[1:0]	R/W	00b	Digital PLL State Machine Control: 00 = Run automatically 01 = Force FREERUN state - set this if in Synthesizer Mode for PLL. 10 = Force NORMAL state 11 = Force HOLDOVER state
PRE_0[20:0]	R/W	000000h	Pre-divider ratio for Input Reference 0 when used by Digital PLL.
PRE_1[20:0]	R/W	000000h	Pre-divider ratio for Input Reference 1 when used by Digital PLL.
Rsvd	R/W	-	Reserved. Always write 0 to this bit location. Read values are not defined.

Table 6F. Digital PLL Feedback Control Register Bit Field Locations and Descriptions

Digital PLL Feedback Control Register Block Field Locations								
Address (Hex)	**D7**	**D6**	**D5**	**D4**	**D3**	**D2**	**D1**	**D0**
0017	M1_0[23:16]							
0018	M1_0[15:8]							
0019	M1_0[7:0]							
001A	M1_1[23:16]							
001B	M1_1[15:8]							
001C	M1_1[7:0]							
001D	Rsvd							
001E	Rsvd							
001F	Rsvd							
0020	Rsvd							
0021	Rsvd							
0022	Rsvd							
0023	LCKBW[3:0]				ACQBW[3:0]			
0024	LCKDAMP[2:0]			ACQDAMP[2:0]			PLLGAIN[1:0]	
0025	TGLCKDMP[2:0]			TGLCKHYS	TGLCKBW[2:0]			Rsvd
0026	Rsvd							
0027	Rsvd							
0028	TGLCKTHR[6:0]							Rsvd
0029	Rsvd							
002A	Rsvd							
002B	FFh							
002C	FFh							
002D	FFh							
002E	FFh							
002F	SLEW[1:0]		Rsvd	HOLD[1:0]		Rsvd	HOLDAVG	FASTLCK
0030	LOCK[7:0]							
0031	Rsvd							DSM_INT[8]
0032	DSM_INT[7:0]							
0033	Rsvd			DSMFRAC[20:16]				
0034	DSMFRAC[15:8]							
0035	DSMFRAC[7:0]							
0036	Rsvd							
0037	Rsvd							
0038	Rsvd							
0039	Rsvd							
003A	DSM_ORD[1:0]		DCXOGAIN[1:0]		Rsvd	DITHGAIN[2:0]		

Digital PLL Feedback Configuration Register Block Field Descriptions			
Bit Field Name	**Field Type**	**Default Value**	**Description**
M1_0[23:0]	R/W	070000h	M1 Feedback divider ratio for Input Reference 0 when used by Digital PLL.
M1_1[23:0]	R/W	070000h	M1 Feedback divider ratio for Input Reference 1 when used by Digital PLL.
LCKBW[3:0]	R/W	0111b	Digital PLL Loop Bandwidth while locked: 0000 = 512 mHz 0001 = 1 Hz 0010 = 2 Hz 0011 = 4 Hz 0100 = 8 Hz 0101 = 16 Hz 0110 = 32 Hz 0111 = 64 Hz 1000 = 128 Hz 1001 = 256 Hz 1010 = 512 Hz 1011 through 1111 = Reserved
ACQBW[3:0]	R/W	0111b	Digital PLL Loop Bandwidth while in acquisition (not-locked): 0000 = 512 mHz 0001 = 1 Hz 0010 = 2 Hz 0011 = 4 Hz 0100 = 8 Hz 0101 = 16 Hz 0110 = 32 Hz 0111 = 64 Hz 1000 = 128 Hz 1001 = 256 Hz 1010 = 512 Hz 1011 through 1111 = Reserved
LCKDAMP[2:0]	R/W	011b	Damping factor for Digital PLL while locked: 000 = Reserved 001 = 1 010 = 2 011 = 5 100 = 10 101 = 20 110 = Reserved 111 = Reserved
ACQDAMP[2:0]	R/W	011b	Damping factor for Digital PLL while in acquisition (not locked): 000 = Reserved 001 = 1 010 = 2 011 = 5 100 = 10 101 = 20 110 = Reserved 111 = Reserved
PLLGAIN[1:0]	R/W	01b	Digital Loop Filter Gain Settings for Digital PLL: 00 = 0.5 01 = 1 10 = 1.5 11 = 2

Digital PLL Feedback Configuration Register Block Field Descriptions			
Bit Field Name	**Field Type**	**Default Value**	**Description**
TGLCKBW[2:0]	R/W	011b	Loop Bandwidth Setting Used when PLL is in tight lock and phase is very close to 0: 000 = off (use loop bandwidth LCKBW[3:0]) 001 = 1Hz 010 = 2Hz 011 = 4Hz 100 = 8Hz 101 = 16Hz 110 = 32Hz 111 = 64Hz
TGLCKDMP[2:0]	R/W	000b	Tight Lock Operation Damping Factor for PLL: 000 = Off (Use Locked Damping Factor LCKDAMP[2:0]) 001 = 1 010 = 2 011 = 5 100 = 10 101 = 20 110 = Reserved 111 = Reserved
TGLCKHYS	R/W	0b	Tight Lock Hysteresis Enable for PLL. Indicates when Tight Lock Operation is entered / exited. 0 = Non-hysteresis - enter & exit when phase error crosses threshold in TGLCKTHR[6:0] 1 = Hysteresis - enter when phase error less than 5nsec and exit when larger than TGLCKTHR[6:0]
TGLCKTHR[6:0]	R/W	00h	Tight Lock Threshold for PLL, used to decide when to enter / exit Tight Lock operation. Effective value = (entered value + 2) * (PLL period * 8 = 2.0-2.67nsec). Range is 4-345nsec.
SLEW[1:0]	R/W	00b	Phase-slope control for Digital PLL: 00 = no limit - controlled by loop bandwidth of Digital PLL (NOTE 1) 01 = 193 µsec / sec 10 = 24 µsec / sec 11 = Reserved
HOLD[1:0]	R/W	00b	Holdover Averaging mode selection for Digital PLL: 00 = Instantaneous mode - uses historical value 100ms prior to entering holdover 01 = Fast Average Mode 10 = Reserved 11 = Set VCO control voltage to $V_{CC}/2$
HOLDAVG	R/W	0b	Holdover Averaging Enable for Digital PLL: 0 = Holdover averaging disabled 1 = Holdover averaging enabled as defined in HOLD[1:0]
FASTLCK	R/W	0b	Enables Fast Lock operation for Digital PLL: 0 = Normal locking using LCKBW & LCKDAMP fields in all cases 1 = Fast Lock mode using ACQBW & ACQDAMP when not phase locked and LCKBW & LCKDAMP once phase locked
LOCK[7:0]	R/W	3Fh	Lock window size for Digital PLL. Unsigned 2's complement binary number in steps of 2.5ns, giving a total range of 640ns. Do not program to 0.
DSM_INT[8:0]	R/W	02Dh	Integer portion of the Delta-Sigma Modulator value. Do not set higher than FFh. This implies that for crystal frequencies lower then 16MHz, the doubler circuit must be enabled.
DSMFRAC[20:0]	R/W	000000h	Fractional portion of Delta-Sigma Modulator value. Divide this number by 2^{21} to determine the actual fraction.

Digital PLL Feedback Configuration Register Block Field Descriptions			
Bit Field Name	**Field Type**	**Default Value**	**Description**
DSM_ORD[1:0]	R/W	11b	Delta-Sigma Modulator Order for Digital PLL: 00 = Delta-Sigma Modulator disabled 01 = 1st order modulation 10 = 2nd order modulation 11 = 3rd order modulation
DCXOGAIN[1:0]	R/W	01b	Multiplier applied to instantaneous frequency error before it is applied to the Digitally Controlled Oscillator in Digital PLL: 00 = 0.5 01 = 1 10 = 2 11 = 4
DITHGAIN[2:0]	R/W	000b	Dither Gain setting for Digital PLL: 000 = no dither 001 = Least Significant Bit (LSB) only 010 = 2 LSBs 011 = 4 LSBs 100 = 8 LSBs 101 = 16 LSBs 110 = 32 LSBs 111 = 64 LSBs
Rsvd	R/W	-	Reserved. Always write 0 to this bit location. Read values are not defined.

NOTE 1: Settings other than “00” may result in a significant increase in initial lock time.

Table 6G. GPIO Control Register Bit Field Locations and Descriptions

The values observed on any GPIO pins that are used as general purpose inputs are visible in the GPI[3:0] register that is located at location 0219h near a number of other read-only registers.

GPIO Control Register Block Field Locations								
Address (Hex)	**D7**	**D6**	**D5**	**D4**	**D3**	**D2**	**D1**	**D0**
006E	Rsvd				GPIO_DIR[3:0]			
006F	Rsvd				GPI3SEL[2]	GPI2SEL[2]	GPI1SEL[2]	GPI0SEL[2]
0070	Rsvd				GPI3SEL[1]	GPI2SEL[1]	GPI1SEL[1]	GPI0SEL[1]
0071	Rsvd				GPI3SEL[0]	GPI2SEL[0]	GPI1SEL[0]	GPI0SEL[0]
0072	Rsvd				GPO3SEL[2]	GPO2SEL[2]	GPO1SEL[2]	GPO0SEL[2]
0073	Rsvd				GPO3SEL[1]	GPO2SEL[1]	GPO1SEL[1]	GPO0SEL[1]
0074	Rsvd				GPO3SEL[0]	GPO2SEL[0]	GPO1SEL[0]	GPO0SEL[0]
0075	Rsvd							
0076	Rsvd				GPO[3:0]			

GPIO Control Register Block Field Descriptions			
Bit Field Name	**Field Type**	**Default Value**	**Description**
GPIO_DIR[3:0]	R/W	00h	Direction control for General-Purpose I/O Pins GPIO[3:0]: 0 = input mode 1 = output mode
GPI0SEL[2:0]	R/W	000b	Function of GPIO[0] pin when set to input mode by GPIO_DIR[0] register bit: 000 = General Purpose Input (value on GPIO[0] pin directly reflected in GPI[0] register bit) 001 = Output Enable control for output Q0 010 = Output Enable control for output Q4 011 = reserved 100 through 111 = reserved
GPI1SEL[2:0]	R/W	000b	Function of GPIO[1] pin when set to input mode by GPIO_DIR[1] register bit: 000 = General Purpose Input (value on GPIO[1] pin directly reflected in GPI[1] register bit) 001 = Output Enable control for output Q1 010 = Output Enable control for output Q5 011 through 111 = reserved
GPI2SEL[2:0]	R/W	000b	Function of GPIO[2] pin when set to input mode by GPIO_DIR[2] register bit: 000 = General Purpose Input (value on GPIO[2] pin directly reflected in GPI[2] register bit) 001 = Output Enable control for output Q2 010 = Output Enable control for output Q6 011 = reserved 100 = reserved 101 = CSEL: Manual Clock Select Input 110 through 111 = reserved
GPI3SEL[2:0]	R/W	000b	Function of GPIO[3] pin when set to input mode by GPIO_DIR[3] register bit: 000 = General Purpose Input (value on GPIO[3] pin directly reflected in GPI[3] register bit) 001 = Output Enable control for output Q3 010 = Output Enable control for output Q7 011 = reserved 100 through 111 = reserved
GPO0SEL[2:0]	R/W	000b	Function of GPIO[0] pin when set to output mode by GPIO_DIR[0] register bit: 000 = General Purpose Output (value in GPO[0] register bit driven on GPIO[0] pin) 001 = Loss-of-Lock Status Flag for Digital PLL reflected on GPIO[0] pin 010 = reserved 011 = reserved 100 = reserved 101 = reserved 110 through 111 = reserved

GPIO Control Register Block Field Descriptions			
Bit Field Name	**Field Type**	**Default Value**	**Description**
GPO1SEL[2:0]	R/W	000b	Function of GPIO[1] pin when set to output mode by GPIO_DIR[1] register bit: 000 = General Purpose Output (value in GPO[1] register bit driven on GPIO[1] pin) 001 = Holdover Status Flag for Digital PLL reflected on GPIO[1] pin 010 = reserved 011 = reserved 100 = reserved 101 = reserved 110 = reserved 111 = reserved
GPO2SEL[2:0]	R/W	000b	Function of GPIO[2] pin when set to output mode by GPIO_DIR[2] register bit: 000 = General Purpose Output (value in GPO[2] register bit driven on GPIO[2] pin) 001 = Loss-of-Signal Flag for Input Reference 0 reflected on GPIO[2] pin 010 = Loss-of-Signal Flag for Input Reference 1 reflected on GPIO[2] pin 011 = reserved 100 = reserved 101 = CSEL: Manual Clock Select Input 110 through 111 = reserved
GPO3SEL[2:0]	R/W	000b	Function of GPIO[3] pin when set to output mode by GPIO_DIR[3] register bit: 000 = General Purpose Output (value in GPO[3] register bit driven on GPIO[3] pin) 001 = reserved 010 = Loss-of-Signal Status Flag for Input Reference 1 reflected on GPIO[3] pin 011 = reserved 100 = reserved 101 through 111 = reserved
GPO[3:0]	R/W	00h	Output Values reflect on pin GPIO[3:0] when General-Purpose Output Mode selected.
Rsvd	R/W	-	Reserved. Always write 0 to this bit location. Read values are not defined.

Table 6H. Output Driver Control Register Bit Field Locations and Descriptions

Output Driver Control Register Block Field Locations								
Address (Hex)	**D7**	**D6**	**D5**	**D4**	**D3**	**D2**	**D1**	**D0**
0077	OUTEN[7:0]							
0078	POL_Q[7:0]							
0079	OUTMODE7[2:0]			SE_MODE7	OUTMODE6[2:0]			SE_MODE6
007A	OUTMODE5[2:0]			SE_MODE5	OUTMODE4[2:0]			SE_MODE4
007B	OUTMODE3[2:0]			SE_MODE3	OUTMODE2[2:0]			SE_MODE2
007C	OUTMODE1[2:0]			SE_MODE1	OUTMODE0[2:0]			SE_MODE0

Output Driver Control Register Block Field Descriptions			
Bit Field Name	**Field Type**	**Default Value**	**Description**
OUTEN[7:0]	R/W	00h	Output Enable control for Clock Outputs Q, nQ[7:0]: 0 = Qn is in a high-impedance state 1 = Qn is enabled as indicated in appropriate OUTMODEn[2:0] register field
POL_Q[7:0]	R/W	00h	Polarity of Clock Outputs Q, nQ[7:0]: 0 = normal polarity 1 = inverted polarity
OUTMODEm[2:0]	R/W	001b	Output Driver Mode of Operation for Clock Output Pair Qm, nQm: 000 = High-impedance 001 = LVPECL 010 = LVDS 011 = LVCMOS 100 = reserved 101 through 111 = reserved
SE_MODEm	R/W	0b	Behavior of Output Pair Qm, nQm when LVCMOS operation is selected: (Must be 0 if LVDS or LVPECL output style is selected) 0 = Qm and nQm are both the same frequency but inverted in phase 1 = Qm and nQm are both the same frequency and phase

Table 6I. Output Divider Control Register Bit Field Locations and Descriptions

Output Divider Control Register Block Field Locations								
Address (Hex)	**D7**	**D6**	**D5**	**D4**	**D3**	**D2**	**D1**	**D0**
007D	Rsvd						NS1_Q0[1:0]	
007E	NS2_Q0[15:8]							
007F	NS2_Q0[7:0]							
0080	Rsvd						NS1_Q1[1:0]	
0081	NS2_Q1[15:8]							
0082	NS2_Q1[7:0]							
0083	Rsvd						N_Q2[17:16]	
0084	N_Q2[15:8]							
0085	N_Q2[7:0]							
0086	Rsvd						N_Q3[17:16]	
0087	N_Q3[15:8]							
0088	N_Q3[7:0]							
0089	Rsvd						NS1_Q4[1:0]	
008A	NS2_Q4[15:8]							
008B	NS2_Q4[7:0]							
008C	Rsvd						NS1_Q5[1:0]	
008D	NS2_Q5[15:8]							
008E	NS2_Q5[7:0]							
008F	Rsvd						NS1_Q6[1:0]	
0090	NS2_Q6[15:8]							
0091	NS2_Q6[7:0]							
0092	Rsvd						NS1_Q7[1:0]	
0093	NS2_Q7[15:8]							
0094	NS2_Q7[7:0]							
0095	Rsvd				NFRAC_Q2[27:24]			
0096	NFRAC_Q2[23:16]							
0097	NFRAC_Q2[15:8]							
0098	NFRAC_Q2[7:0]							
0099	Rsvd				NFRAC_Q3[27:24]			
009A	NFRAC_Q3[23:16]							
009B	NFRAC_Q3[15:8]							
009C	NFRAC_Q3[7:0]							

Output Divider Control Register Block Field Descriptions			
Bit Field Name	**Field Type**	**Default Value**	**Description**
NS1_Qm[1:0] (m = 0,1)	R/W	10b	1st Stage Output Divider Ratio for Output Clock Qm, nQm: (m = 0, 1): 00 = /5 01 = /6 10 = /4 11 = Output Qm, nQm not switching
NS1_Qm[1:0] (m = 4, 5, 6, 7)	R/W	10b	1st Stage Output Divider Ratio for Output Clock Qm, nQm (m = 4, 5, 6, 7): 00 = /5 01 = /6 10 = /4 11 = /1 (Do not use this selection if PLL is the source since the 2nd-stage divider has a limit of 1GHz).
NS2_Qm[15:0]	R/W	0002h	2nd Stage Output Divider Ratio for Output Clock Qm, nQm (m = 0, 1, 4, 5, 6, 7). Actual divider ratio is 2x the value written here. A value of 0 in this register will bypass the second stage of the divider.
N_Qm[17:0]	R/W	00008h	Integer Portion of Output Divider Ratio for Output Clock Qm, nQm (m = 2, 3). Values of 0, 1 or 2 cannot be written to this register. Actual divider ratio is 2x the value written here.
NFRAC_Qm[27:0]	R/W	0000000h	Fractional Portion of Output Divider Ratio for Output Clock Qm, nQm (m = 2, 3). Actual fractional portion is 2x the value written here. Fraction = (NFRAC_Qm * 2) * 2^{-28}
Rsvd	R/W	-	Reserved. Always write 0 to this bit location. Read values are not defined.

Table 6J. Output Clock Phase Adjustment Control Register Bit Field Locations and Descriptions

Output Clock Phase Adjustment Control Register Block Field Locations								
Address (Hex)	**D7**	**D6**	**D5**	**D4**	**D3**	**D2**	**D1**	**D0**
009D	CRSE_TRG[7:0]							
009E	Rsvd			COARSE0[4:0]				
009F	Rsvd			COARSE1[4:0]				
00A0	Rsvd			COARSE2[4:0]				
00A1	Rsvd			COARSE3[4:0]				
00A2	Rsvd			COARSE4[4:0]				
00A3	Rsvd			COARSE5[4:0]				
00A4	Rsvd			COARSE6[4:0]				
00A5	Rsvd			COARSE7[4:0]				
00A6	Rsvd				FINE2[3:0]			
00A7	Rsvd				FINE3[3:0]			

Output Clock Phase Adjustment Control Register Block Field Descriptions			
Bit Field Name	**Field Type**	**Default Value**	**Description**
CRSE_TRG[7:0]	R/W	00h	Trigger Coarse Phase Adjustment for output Qm, nQm by amount specified in COARSEm[4:0] register upon 0→1 transition of this Trigger register bit. Please ensure the PA_BUSYm status bit is 0 before triggering another adjustment cycle on that particular output. Trigger bit must be returned to 0 before another delay cycle can be triggered.
COARSEm[4:0]	R/W	00000b	Number of periods to be inserted when Trigger happens. Relevant clock period is determined by the clock source selected for output Qm, nQm in its CLK_SELm register field.
FINEm[3:0]	R/W	0000b	Number of 1/16th's of the relevant clock period to add to the phase of output Qm, nQm (m = 2, 3). Relevant clock period is determined by the clock source selected for output Qm, nQm in its CLK_SELm register field. The PLL_SYN bit for the PLL driving the output divider for the output in question must be toggled to make this value take effect. Note that toggling the PLL_SYN bit will clear all Coarse delay values and so Fine delay should be set first.
Rsvd	R/W	-	Reserved. Always write 0 to this bit location. Read values are not defined.

Table 6K. Output Clock Source Control Register Bit Field Locations and Descriptions

Output Clock Source Control Register Block Field Locations								
Address (Hex)	**D7**	**D6**	**D5**	**D4**	**D3**	**D2**	**D1**	**D0**
00A8	Rsvd		Rsvd	PLL_SYN	0	0	0	0
00A9	Rsvd	CLK_SEL5[2:0]			Rsvd	CLK_SEL4[2:0]		
00AA	Rsvd	CLK_SEL7[2:0]			Rsvd	CLK_SEL6[2:0]		
00AB	10		10		Rsvd		Rsvd	

Output Clock Source Control Register Block Field Descriptions			
Bit Field Name	**Field Type**	**Default Value**	**Description**
PLL_SYN	R/W	0b	Output Synchronization Control for Outputs Derived from PLL. Setting this bit from 0→1 will cause the output divider(s) for the affected outputs to be held in reset. Setting this bit from 1→0 will release all the output divider(s) for the affected outputs to run from the same point in time with the coarse output phase adjustment reset to 0.
CLK_SEL4[2:0]	R/W	000b	Clock Source Selection for output Q4, nQ4. Do not select Input Reference 0 or 1 if that input is faster than 250MHz. 000 = PLL 001 = Reserved 010 = Output Q2, nQ2 011 = Output Q3, nQ3 100 = Input Reference 0 (CLK0) 101 = Input Reference 1 (CLK1) 110 = Reserved 111 = Crystal Input
CLK_SEL5[2:0]	R/W	010b	Clock Source Selection for output Q5, nQ5. Do not select Input Reference 0 or 1 if that input is faster than 250MHz. 000 = PLL 001 = Reserved 010 = Output Q2, nQ2 011 = Output Q3, nQ3 100 = Input Reference 0 (CLK0) 101 = Input Reference 1 (CLK1) 110 = Reserved 111 = Crystal Input
CLK_SEL6[2:0]	R/W	000b	Clock Source Selection for output Q6, nQ6. Do not select Input Reference 0 or 1 if that input is faster than 250MHz. 000 = PLL 001 = Reserved 010 = Output Q2, nQ2 011 = Output Q3, nQ3 100 = Input Reference 0 (CLK0) 101 = Input Reference 1 (CLK1) 110 = Reserved 111 = Crystal Input
CLK_SEL7[2:0]	R/W	101b	Clock Source Selection for output Q7, nQ7. Do not select Input Reference 0 or 1 if that input is faster than 250MHz. 000 = PLL 001 = Reserved 010 = Output Q2, nQ2 011 = Output Q3, nQ3 100 = Input Reference 0 (CLK0) 101 = Input Reference 1 (CLK1) 110 = Reserved 111 = Crystal Input
Rsvd	R/W	-	Reserved. Always write 0 to this bit location. Read values are not defined.

Table 6L. Analog PLL Control Register Bit Field Locations and Descriptions

Please contact IDT through one of the methods listed on the last page of this datasheet for details on how to set these fields for a particular user configuration.

Analog PLL Control Register Block Field Locations								
Address (Hex)	**D7**	**D6**	**D5**	**D4**	**D3**	**D2**	**D1**	**D0**
00AC	CPSET[2:0]			RS[1:0]		CP[1:0]		WPOST
00AD	Rsvd				SYN_MODE	Rsvd	DLCNT	DBITM
00AE	Rsvd		VCOMAN	DBIT1[4:0]				
00AF	Rsvd			DBIT2[4:0]				

Analog PLL Control Register Block Field Descriptions			
Bit Field Name	**Field Type**	**Default Value**	**Description**
CPSET[2:0]	R/W	100b	Charge Pump Current Setting for Analog PLL: 000 = 110 µA 001 = 220 µA 010 = 330 µA 011 = 440 µA 100 = 550 µA 101 = 660 µA 110 = 770 µA 111 = 880 µA
RS[1:0]	R/W	01b	Internal Loop Filter Series Resistor Setting for Analog PLL: 00 = 330 Ω 01 = 640 Ω 10 = 1.2 kΩ 11 = 1.79 kΩ
CP[1:0]	R/W	01b	Internal Loop Filter Parallel Capacitor Setting for Analog PLL: 00 = 40 pF 01 = 80 pF 10 = 140 pF 11 = 200 pF
WPOST	R/W	1b	Internal Loop Filter 2nd-Pole Setting for Analog PLL: 0 = Rpost = 497 Ω, Cpost = 40 pF 1 = Rpost = 1.58k Ω, Cpost = 40 pF
DLCNT	R/W	1b	Digital Lock Count Setting for Analog PLL: Value should be set to 0 (1ppm accuracy) if external capacitor value is >95nF, otherwise set to 1. 0 = 1 ppm accuracy 1 = 16 ppm accuracy
DBITM	R/W	0b	Digital Lock Manual Override Setting for Analog PLL: 0 = Automatic Mode 1 = Manual Mode
VCOMAN	R/W	1b	Manual Lock Mode VCO Selection Setting for Analog PLL: 0 = VCO2 1 = VCO1
DBIT1[4:0]	R/W	01011b	Manual Mode Digital Lock Control Setting for VCO1 in Analog PLL.
DBIT2[4:0]	R/W	00000b	Manual Mode Digital Lock Control Setting for VCO2 in Analog PLL.
SYN_MODE	R/W	0b	Frequency Synthesizer Mode Control for PLL: 0 = PLL jitter attenuates and translates one or more input references 1 = PLL synthesizes output frequencies using only the crystal as a reference Note that the STATE0[1:0] field in the Digital PLL Control Register must be set to Force Freerun state.
Rsvd	R/W	-	Reserved. Always write 0 to this bit location. Read values are not defined.

Table 6M. Power Down Control Register Bit Field Locations and Descriptions

Power Down Control Register Block Field Locations								
Address (Hex)	**D7**	**D6**	**D5**	**D4**	**D3**	**D2**	**D1**	**D0**
00B4	Rsvd							DBL_DIS
00B5	Rsvd				1	1	CLK1_DIS	CLK0_DIS
00B6	Rsvd			1	Rsvd			
00B7	Q7_DIS	Q6_DIS	Q5_DIS	Q4_DIS	Q3_DIS	Q2_DIS	Q1_DIS	Q0_DIS
00B8	Rsvd				1	DPLL_DIS	1	CALRST

Power Down Control Register Block Field Descriptions			
Bit Field Name	**Field Type**	**Default Value**	**Description**
DBL_DIS	R/W	0b	Controls whether Crystal Input Frequency is doubled before being used in PLL: 0 = 2x Actual Crystal Frequency Used 1 = Actual Crystal Frequency Used
CLKm_DIS	R/W	0b	Disable Control for Input Reference m: 0 = Input Reference m is Enabled 1 = Input Reference m is Disabled
Qm_DIS	R/W	0b	Disable Control for Output Qm, nQm: 0 = Output Qm, nQm functions normally 1 = All logic associated with Output Qm/nQm is Disabled & Driver in High-Impedance state
DPLL_DIS	R/W	0b	Disable Control for Digital PLL: 0 = Digital PLL Enabled 1 = Digital PLL Disabled
CALRST	R/W	0b	Reset Calibration Logic for APLL: 0 = Calibration Logic for APLL Enabled 1 = Calibration Logic for APLL Disabled
Rsvd	R/W	-	Reserved. Always write 0 to this bit location. Read values are not defined.

Table 6N. Input Monitor Control Register Bit Field Locations and Descriptions

Input Monitor Control Register Block Field Locations								
Address (Hex)	**D7**	**D6**	**D5**	**D4**	**D3**	**D2**	**D1**	**D0**
00B9	Rsvd							LOS_0[16]
00BA	LOS_0[15:8]							
00BB	LOS_0[7:0]							
00BC	Rsvd							LOS_1[16]
00BD	LOS_1[15:8]							
00BE	LOS_1[7:0]							
00BF	Rsvd							Rsvd
00C0	Rsvd							
00C1	Rsvd							
00C2	Rsvd							Rsvd
00C3	Rsvd							
00C4	Rsvd							
00C5	Rsvd							
00C6	Rsvd							

Input Monitor Control Register Block Field Descriptions			
Bit Field Name	**Field Type**	**Default Value**	**Description**
LOS_m[16:0]	R/W	1FFFFh	Number of Input Monitoring clock periods before Input Reference m is considered to be missed (soft alarm). Minimum setting is 3.
Rsvd	R/W	-	Reserved. Always write 0 to this bit location. Read values are not defined.

Table 6O. Interrupt Enable Control Register Bit Field Locations and Descriptions

Interrupt Enable Control Register Block Field Locations								
Address (Hex)	**D7**	**D6**	**D5**	**D4**	**D3**	**D2**	**D1**	**D0**
00C7	Rsvd	LOL_EN	Rsvd	HOLD_EN	Rsvd	Rsvd	LOS1_EN	LOS0_EN
00C8	Rsvd							

Interrupt Enable Control Register Block Field Descriptions			
Bit Field Name	**Field Type**	**Default Value**	**Description**
LOL_EN	R/W	0b	Interrupt Enable Control for Loss-of-Lock Interrupt Status Bit for PLL: 0 = LOL_INT register bit will not affect status of nINT output signal 1 = LOL_INT register bit will affect status of nINT output signal
HOLD_EN	R/W	0b	Interrupt Enable Control for Holdover Interrupt Status Bit for PLL: 0 = HOLD_INT register bit will not affect status of nINT output signal 1 = HOLD_INT register bit will affect status of nINT output signal
LOSm_EN	R/W	0b	Interrupt Enable Control for Loss-of-Signal Interrupt Status Bit for Input Reference m: 0 = LOSm_INT register bit will not affect status of nINT output signal 1 = LOSm_INT register bit will affect status of nINT output signal
Rsvd	R/W	-	Reserved. Always write 0 to this bit location. Read values are not defined.

Table 6P. Interrupt Status Register Bit Field Locations and Descriptions

This register contain sticky' bits for tracking the status of the various alarms. Whenever an alarm occurs, the appropriate Interrupt Status bit will be set. The Interrupt Status bit will remain asserted even after the original alarm goes away. The Interrupt Status bits remain asserted until explicitly cleared by a write of a '1' to the bit over the serial port. This type of functionality is referred to as Read / Write-1-to-Clear (R/W1C).

Interrupt Status Register Block Field Locations								
Address (Hex)	**D7**	**D6**	**D5**	**D4**	**D3**	**D2**	**D1**	**D0**
0200	Rsvd	LOL_INT	Rsvd	HOLD_INT	Rsvd	Rsvd	LOS1_INT	LOS0_INT
0201	Rsvd							
0202	Rsvd							
0203	Rsvd							

Interrupt Status Register Block Field Descriptions			
Bit Field Name	**Field Type**	**Default Value**	**Description**
LOL_INT	R/W1C	0b	Interrupt Status Bit for Loss-of-Lock on PLL: 0 = No Loss-of-Lock alarm flag on PLL has occurred since the last time this register bit was cleared 1 = At least one Loss-of-Lock alarm flag on PLL has occurred since the last time this register bit was cleared
HOLD_INT	R/W1C	0b	Interrupt Status Bit for Holdover on PLL: 0 = No Holdover alarm flag on PLL has occurred since the last time this register bit was cleared 1 = At least one Holdover alarm flag on PLL has occurred since the last time this register bit was cleared
LOSm_INT	R/W1C	0b	Interrupt Status Bit for Loss-of-Signal on Input Reference m: 0 = No Loss-of-Signal alarm flag on Input Reference m has occurred since the last time this register bit was cleared 1 = At least one Loss-of-Signal alarm flag on Input Reference m has occurred since the last time this register bit was cleared
Rsvd	R/W	-	Reserved. Always write 0 to this bit location. Read values are not defined.

Table 6Q. Output Phase Adjustment Status Register Bit Field Locations and Descriptions

Output Phase Adjustment Status Register Block Field Locations								
Address (Hex)	**D7**	**D6**	**D5**	**D4**	**D3**	**D2**	**D1**	**D0**
0204	PA_BUSY7	PA_BUSY6	PA_BUSY5	PA_BUSY4	PA_BUSY3	PA_BUSY2	PA_BUSY1	PA_BUSY0

Output Phase Adjustment Status Register Block Field Descriptions			
Bit Field Name	**Field Type**	**Default Value**	**Description**
PA_BUSYm	R/O	-	Phase Adjustment Event Status for output Qm, nQm: 0 = No phase adjustment is currently in progress on output Qm, nQm 1 = Phase adjustment still in progress on output Qm, nQm. Do not initiate any new phase adjustment at this time

Table 6R. Digital PLL Status Register Bit Field Locations and Descriptions

Digital PLL Status Register Block Field Locations								
Address (Hex)	**D7**	**D6**	**D5**	**D4**	**D3**	**D2**	**D1**	**D0**
0205	Rsvd			EXTLOS	Rsvd	CURR_REF0[2:0]		
0206	Rsvd			Rsvd	Rsvd	Rsvd	Rsvd	
0207	Rsvd							Rsvd
0208	Rsvd							
0209	Rsvd							
020A	Rsvd							Rsvd
020B	Rsvd							
020C	Rsvd							
020D	Rsvd							
020E	Rsvd							

Digital PLL Status Register Block Field Descriptions			
Bit Field Name	**Field Type**	**Default Value**	**Description**
CURR_REF0[2:0]	R/O	-	Currently Selected Reference Status for Digital PLL: 000 - 011 = No reference currently selected 100 = Input Reference 0 (CLK0, nCLK0) selected 101 = Input Reference 1 (CLK1, nCLK1) selected 110 = Reserved 111 = Reserved
EXTLOS	R/O	-	External Loopback signal lost for PLL: 0 = PLL has a valid feedback reference signal 1 = PLL has lost the external feedback reference signal and is no longer locked
Rsvd	R/W	-	Reserved. Always write 0 to this bit location. Read values are not defined.

Table 6S. General Purpose Input Status Register Bit Field Locations and Descriptions

Global Interrupt Status Register Block Field Locations								
Address (Hex)	**D7**	**D6**	**D5**	**D4**	**D3**	**D2**	**D1**	**D0**
0219	Rsvd				GPI[3]	GPI[2]	GPI[1]	GPI[0]

General Purpose Input Status Register Block Field Descriptions			
Bit Field Name	**Field Type**	**Default Value**	**Description**
GPI[3:0]	R/O	-	Shows current values on GPIO[3:0] pins that are configured as General-Purpose Inputs.

Table 6T. Global Interrupt Status Register Bit Field Locations and Descriptions

Global Interrupt Status Register Block Field Locations								
Address (Hex)	**D7**	**D6**	**D5**	**D4**	**D3**	**D2**	**D1**	**D0**
021A	Rsvd				Rsvd			INT
021B	Rsvd							
021C	Rsvd		Rsvd					
021D	Rsvd		Rsvd					
021E	Rsvd					Rsvd	Rsvd	BOOTFAIL
021F	Rsvd	Rsvd	Rsvd	Rsvd	nEEP_CRC	Rsvd	Rsvd	EEPDONE

Global Interrupt Status Register Block Field Descriptions			
Bit Field Name	**Field Type**	**Default Value**	**Description**
INT	R/O	-	Device Interrupt Status: 0 = No Interrupt Status bits that are enabled are asserted (nINT pin released) 1 = At least one Interrupt Status bit that is enabled is asserted (nINT pin asserted low)
BOOTFAIL	R/O	-	Reading of Serial EEPROM failed. Once set this bit is only cleared by reset.
nEEP_CRC	R/O	-	EEPROM CRC Error (Active Low): 0 = EEPROM was detected and read, but CRC check failed - please reset the device via the nRST pin to retry (serial port is locked) 1 = No EEPROM CRC Error
EEPDONE	R/O	-	Serial EEPROM Read cycle has completed. Once set this bit is only cleared by reset.
Rsvd	R/W	-	Reserved. Always write 0 to this bit location. Read values are not defined.

Absolute Maximum Ratings

NOTE: Stresses beyond those listed under *Absolute Maximum Ratings* may cause permanent damage to the device. These ratings are stress specifications only. Functional operation of the product at these conditions or any conditions beyond those listed in the *DC Characteristics or AC Characteristics* is not implied. Exposure to absolute maximum rating conditions for extended periods may affect product reliability.

Item	Rating
Supply Voltage, V_{CC}	3.63V
Inputs, V_I OSCI Other Input	 0V to 2V -0.5V to V_{CC} + 0.5V
Outputs, V_O, (Q[7:0], nQ[7:0])	-0.5V to V_{CCOX} + 0.5V
Outputs, V_O, (GPIO[3:0], SDATA, SCLK, nINT)	-0.5V to V_{CC} + 0.5V
Outputs, I_O (Q[7:0], nQ[7:0]) Continuous Current Surge Current	 40mA 65mA
Outputs, I_O (GPIO[3:0], SDATA, SCLK, nINT) Continuous Current Surge Current	 8mA 13mA
Junction Temperature, T_J	125°C
Storage Temperature, T_{STG}	-65°C to 150°C

NOTE: V_{CCOX} denotes V_{CCO0}, V_{CCO1}, V_{CCO2}, V_{CCO3}, V_{CCO4}, V_{CCO5}, V_{CCO6}, V_{CCO7}.

Supply Voltage Characteristics

Table 7A. Power Supply Characteristics, V_{CC} = 3.3V±5%, V_{EE} = 0V, T_A = -40°C to 85°C

Symbol	Parameter	Test Conditions	Minimum	Typical	Maximum	Units
V_{CC}	Core Supply Voltage		3.135	3.3	3.465	V
V_{CCA}	Analog Supply Voltage		V_{CC} – 0.09	3.3	V_{CC}	V
I_{CC}	Power Supply Current; NOTE 1			67	90	mA
I_{CCA}	Analog Supply Current; NOTE 1			121	187	mA
I_{EE}	Power Supply Current; NOTE 2	Q[0:7] Configured for LVPECL Logic Levels; Outputs Unloaded		477	630	mA

NOTE 1. I_{CC} and I_{CCA} are included in I_{EE} when Q[0:7] is configured for LVPECL logic levels.
NOTE 2. Internal dynamic switching current at maximum f_{OUT} is included.

Table 7B. Power Supply Characteristics, V_{CC} = 2.5V±5%, V_{EE} = 0V, T_A = -40°C to 85°C

Symbol	Parameter	Test Conditions	Minimum	Typical	Maximum	Units
V_{CC}	Core Supply Voltage		2.375	2.5	2.625	V
V_{CCA}	Analog Supply Voltage		V_{CC} – 0.09	2.5	V_{CC}	V
I_{CC}	Power Supply Current; NOTE 1			66	85	mA
I_{CCA}	Analog Supply Current; NOTE 1			116	182	mA
I_{EE}	Power Supply Current; NOTE 2	Q[0:7] Configured for LVPECL Logic Levels; Outputs Unloaded		444	595	mA

For NOTES, see Table 7A above.

Table 7C. Maximum Output Supply Current, V_{CC} = 3.3V ±5% or 2.5V ±5%, V_{EE} = 0V, T_A = -40°C to 85°C

Symbol	Parameter	Test Conditions	V_{CCOx} = 3.3V ±5%			V_{CCOx} = 2.5V ±5%			V_{CCOx} = 1.8V ±5%	Units
			LVPECL	LVDS	LVCMOS	LVPECL	LVDS	LVCMOS	LVCMOS	
I_{CCO0}	Q0, nQ0 Output Supply Current	Outputs Unloaded	50	60	55	40	50	45	35	mA
I_{CCO1}	Q1, nQ1 Output Supply Current	Outputs Unloaded	50	60	55	40	50	45	35	mA
I_{CCO2}	Q2, nQ2 Output Supply Current	Outputs Unloaded	80	90	80	70	80	70	60	mA
I_{CCO3}	Q3, nQ3 Output Supply Current	Outputs Unloaded	80	90	80	70	80	70	60	mA
I_{CCO4}	Q4, nQ4 Output Supply Current	Outputs Unloaded	55	65	55	45	55	45	40	mA
I_{CCO5}	Q5, nQ5 Output Supply Current	Outputs Unloaded	55	65	55	45	55	45	40	mA
I_{CCO6}	Q6, nQ6 Output Supply Current	Outputs Unloaded	55	65	55	45	55	45	40	mA
I_{CCO7}	Q7, nQ7 Output Supply Current	Outputs Unloaded	55	65	55	45	55	45	40	mA

NOTE: Internal dynamic switching current at maximum f_{OUT} is included.
NOTE: V_{CCOX} denotes V_{CCO0}, V_{CCO1}, V_{CCO2}, V_{CCO3}, V_{CCO4}, V_{CCO5}, V_{CCO6}, V_{CCO7}.

DC Electrical Characteristics

Table 8A. LVCMOS/LVTTL DC Characteristics, V_{EE} = 0V, T_A = -40°C to 85°C

Symbol	Parameter		Test Conditions	Minimum	Typical	Maximum	Units
V_{IH}	Input High Voltage		V_{CC} = 3.3V	2		V_{CC} + 0.3	V
			V_{CC} = 2.5V	1.7		V_{CC} + 0.3	V
V_{IL}	Input Low Voltage		V_{CC} = 3.3V	-0.3		0.8	V
			V_{CC} = 2.5V	-0.3		0.7	V
I_{IH}	Input High Current	PLL_BYP, S_A0	V_{CC} = V_{IN} = 3.465V or 2.625V			150	µA
		SDATA, nRST, SCLK	V_{CC} = V_{IN} = 3.465V or 2.625V			5	µA
		GPIO[3:0]	V_{CC} = V_{IN} = 3.465V or 2.625V			1	mA
I_{IL}	Input Low Current	PLL_BYP, S_A0	V_{CC} = 3.465V or 2.625V, V_{IN} = 0V	-5			µA
		SDATA, nRST, SCLK	V_{CC} = 3.465V or 2.625V, V_{IN} = 0V	-150			µA
		GPIO[3:0]	V_{CC} = 3.465V or 2.625V, V_{IN} = 0V	-1			mA
V_{OH}	Output High Voltage	SDATA, SCLK, nINT; NOTE 1	V_{CC} = 3.3V±5%, I_{OH} = -5µA	2.6			V
		GPIO[3:0]	V_{CC} = 3.3V±5%, I_{OH} = -50µA	2.6			V
		SDATA, SCLK, nINT; NOTE 1	V_{CC} = 2.5V±5%, I_{OH} = -5µA	1.8			V
		GPIO[3:0]	V_{CC} = 2.5V±5%, I_{OH} = -50µA	1.8			V
V_{OL}	Output Low Voltage	SDATA, SCLK, nINT; NOTE 1	V_{CC} = 3.3V±5% or 2.5V±5%, I_{OL} = 5mA			0.5	V
		GPIO[3:0]	V_{CC} = 3.3V±5% or 2.5V±5%, I_{OL} = 50µA			0.5	V

NOTE 1: Use of external pull-up resistors is recommend.

Table 8B. Differential Input DC Characteristics, V_{CC} = V_{CCOX} = 3.3V±5% or 2.5V±5%, V_{EE} = 0V, T_A = -40°C to 85°C

Symbol	Parameter		Test Conditions	Minimum	Typical	Maximum	Units
I_{IH}	Input High Current	CLKx, nCLKx	V_{CC} = V_{IN} = 3.465V or 2.625V			150	µA
I_{IL}	Input Low Current	CLKx	V_{CC} = 3.465V or 2.625V, V_{IN} = 0V	-5			µA
		nCLKx	V_{CC} = 3.465V or 2.625V, V_{IN} = 0V	-150			µA
V_{PP}	Peak-to-Peak Voltage; NOTE 1			0.15		1.3	V
V_{CMR}	Common Mode Input Voltage; NOTE 1, 2			V_{EE}		V_{CC} – 1.2	V

NOTE: CLKx denotes CLK0, CLK1. nCLKx denotes nCLK0, nCLK1.
NOTE: V_{CCOX} denotes V_{CCO0}, V_{CCO1}, V_{CCO2}, V_{CCO3}, V_{CCO4}, V_{CCO5}, V_{CCO6}, V_{CCO7}.
NOTE 1: V_{IL} should not be less than -0.3V. V_{IH} should not be higher than V_{CC}.
NOTE 2: Common mode voltage is defined as the cross-point.

Table 8C. LVPECL DC Characteristics, V_{CC} = 3.3V±5% or 2.5V±5%, V_{CCOX} = 3.3V±5% or 2.5V±5%, V_{EE} = 0V,T_A = -40°C to 85°C

Symbol	Parameter		Test Conditions	V_{CCOx} = 3.3V±5%			V_{CCOx} = 2.5V±5%			Units
				Minimum	Typical	Maximum	Minimum	Typical	Maximum	
V_{OH}	Output High Voltage; NOTE 1	Qx, nQx		V_{CCOx} - 1.3		V_{CCOx} - 0.8	V_{CCOx} - 1.35		V_{CCOx} - 0.9	V
V_{OL}	Output Low Voltage; NOTE 1	Qx, nQx		V_{CCOx} - 1.95		V_{CCOx} - 1.75	V_{CCOx} - 1.95		V_{CCOx} - 1.75	V

NOTE: V_{CCOx} denotes V_{CCO0}, V_{CCO1}, V_{CCO2}, V_{CCO3}, V_{CCO4}, V_{CCO5}, V_{CCO6}, V_{CCO7}.
NOTE: Qx denotes Q0, Q1, Q2, Q3, Q4, Q5, Q6, Q7. nQx denotes nQ0, nQ1, nQ2, nQ3, nQ4, nQ5, nQ6, nQ7.
NOTE 1: Outputs terminated with 50Ω to V_{CCOx} – 2V.

Table 8D. LVDS DC Characteristics, V_{CC} = 3.3V ±5% or 2.5V ±5%, V_{CCOX} = 3.3V±5% or 2.5V±5%, V_{EE} = 0V, T_A = -40°C to 85°C

Symbol	Parameter		Test Conditions	Minimum	Typical	Maximum	Units
V_{OD}	Differential Output Voltage	Qx, nQx		195		454	mV
ΔV_{OD}	V_{OD} Magnitude Change	Qx, nQx				50	mV
V_{OS}	Offset Voltage	Qx, nQx		1.1		1.375	V
ΔV_{OS}	V_{OS} Magnitude Change	Qx, nQx				50	mV

NOTE: V_{CCOx} denotes V_{CCO0}, V_{CCO1}, V_{CCO2}, V_{CCO3}, V_{CCO4}, V_{CCO5}, V_{CCO6}, V_{CCO7}.
NOTE: Qx denotes Q0, Q1, Q2, Q3, Q4, Q5, Q6, Q7. nQx denotes nQ0, nQ1, nQ2, nQ3, nQ4, nQ5, nQ6, nQ7.
NOTE: Terminated 100Ω across Qx and nQx.

Table 8E. LVCMOS DC Characteristics, V_{CC} = 3.3V ±5% or 2.5V ±5%, V_{EE} = 0V, T_A = -40°C to 85°C

Symbol	Parameter		Test Conditions	V_{CCOx} = 3.3V±5%			V_{CCOx} = 2.5V±5%			V_{CCOx} = 1.8V ±5%			Units
				Minimum	Typical	Maximum	Minimum	Typical	Maximum	Minimum	Typical	Maximum	
V_{OH}	Output High Voltage	Qx, nQx	I_{OH} = -8mA	2.6			1.8			1.1			V
V_{OL}	Output Low Voltage	Qx, nQx	I_{OL} = 8mA			0.5			0.5			0.5	V

NOTE: V_{CCOx} denotes V_{CCO0}, V_{CCO1}, V_{CCO2}, V_{CCO3}, V_{CCO4}, V_{CCO5}, V_{CCO6}, V_{CCO7}.
NOTE: Qx denotes Q0, Q1, Q2, Q3, Q4, Q5, Q6, Q7. nQx denotes nQ0, nQ1, nQ2, nQ3, nQ4, nQ5, nQ6, nQ7.

Table 9. Input Frequency Characteristics, V_{CC} = 3.3V ± 5% or 2.5V±5%, T_A = -40°C to 85°C

Symbol	Parameter		Test Conditions	Minimum	Typical	Maximum	Units
f_{IN}	Input Frequency; NOTE 1	OSCI, OSCO		10		40	MHz
		CLKx, nCLKx		0.008		875	MHz
f_{SCLK}	Serial Port Clock	SCLK	Slave Mode	100		400	kHz

NOTE: CLKx denotes CLK0, CLK1. nCLKx denotes nCLK0, nCLK1.
NOTE 1: For the input reference frequency, the divider values must be set for the VCO to operate within its supported range.

Table 10. Crystal Characteristics

Parameter	Test Conditions	Minimum	Typical	Maximum	Units
Mode of Oscillation			Fundamental		
Frequency		10		40	MHz
Equivalent Series Resistance (ESR);			15		Ω
Load Capacitance (C_L)			12		pF
Frequency Stability (total)		-100		100	ppm

AC Electrical Characteristics

Table 11. AC Characteristics, V_{CC} = 3.3V ±5% or 2.5V ±5%, V_{CCOx} = 3.3V ±5%, 2.5V ±5% or 1.8V ±5% (1.8V only supported for LVCMOS outputs), T_A = -40°C to 85°C

Symbol	Parameter			Test Conditions	Minimum	Typical	Maximum	Units
f_{VCO}	VCO Operating Frequency				3000		4000	MHz
f_{OUT}	Output Frequency	LVPECL, LVDS		Q0, Q1, Q4, Q5, Q6, Q7 Outputs	0.008		1000	MHz
				Q2, Q3 Outputs Integer Divide Ratio & No Added Phase Delay	0.008		666.67	MHz
				Q2, Q3 Outputs Non-integer Divide and/or Added Phase Delay	0.008		400	MHz
		LVCMOS			0.008		250	MHz
t_R / t_F	Output Rise and Fall Times	LVPECL		20% to 80%	145	340	600	ps
		LVDS		20% to 80%	100	250	500	ps
		LVCMOS		20% to 80%, V_{CCOx} = 3.3V	180	350	600	ps
				20% to 80%, V_{CCOx} = 2.5V	200	350	550	ps
				20% to 80%, V_{CCOx} = 1.8V	200	410	650	ps
SR	Output Slew Rate	LVPECL		Measured on Differential Waveform, ±150mV from Center	1		5	V/ns
		LVDS		Measured on Differential Waveform, ±150mV from Center	0.5		4	V/ns
*t*sk(b)	Bank Skew	LVPECL	Q0, nQ0, Q1, nQ1	NOTE 1, 2, 3, 5			75	ps
			Q4, nQ4, Q5, nQ5	NOTE 1, 2, 3, 5			75	ps
			Q6, nQ6, Q7, nQ7	NOTE 1, 2, 3, 5			75	ps
		LVDS	Q0, nQ0, Q1, nQ1	NOTE 1, 2, 3, 5			75	ps
			Q4, nQ4, Q5, nQ5	NOTE 1, 2, 3, 5			75	ps
			Q6, nQ6, Q7,nQ7	NOTE 1, 2, 3, 5			75	ps
		LVCMOS	Q0, nQ0, Q1, nQ1	NOTE 1, 2, 4, 5, 6			80	ps
			Q4, nQ4, Q5, nQ5	NOTE 1, 2, 4, 5, 6			115	ps
			Q6, nQ6, Q7, nQ7	NOTE 1, 2, 4, 5, 6			115	ps
odc	Output Duty Cycle; NOTE 7	LVPECL		$f_{OUT} \leq$ 666.667MHz	45	50	55	%
				f_{OUT} > 666.667MHz	40	50	60	%
		LVDS		$f_{OUT} \leq$ 666.667MHz	45	50	55	%
				f_{OUT} > 666.667MHz	40	50	60	%
		LVCMOS			40	50	60	%

Symbol	Parameter		Test Conditions	Minimum	Typical	Maximum	Units
	Initial Frequency Offset		Switchover or Entering / Leaving Holdover State; NOTE 8, 13	-50		50	ppb
	Output Phase Change in Fully Hitless Switching		Switchover or Entering / Leaving Holdover State; NOTE 10, 13		5		ns
Φ_{SSB}(1k)	Single Sideband Phase Noise; NOTE 9	1kHz	122.88MHz Output		-120		dBc/Hz
Φ_{SSB}(10k)		10kHz	122.88MHz Output		-128		dBc/Hz
Φ_{SSB}(100k)		100kHz	122.88MHz Output		-136		dBc/Hz
Φ_{SSB}(1M)		1MHz	122.88MHz Output		-147		dBc/Hz
Φ_{SSB}(10M)		10MHz	122.88MHz Output		-153		dBc/Hz
Φ_{SSB}(30M)		≥30MHz	122.88MHz Output		-154		dBc/Hz
	Spurious Limit at Offset	≥800kHz	122.88MHz output; NOTE 11		-83		dBc
*t*startup	Startup Time	Internal OTP Startup; NOTE 13	from V_{CC} >80% to First Output Clock Edge		110	150	ms
		External EEPROM Startup; NOTE 12, 13	from V_{CC} >80% to First Output Clock Edge (0 retries). I^2C Frequency = 100kHz		150	200	ms
			from V_{CC} >80% to First Output Clock Edge (0 retries). I^2C Frequency = 400kHz		130	150	ms
			from V_{CC} >80% to First Output Clock Edge (31 retries). I^2C Frequency = 100kHz		925	1200	ms
			from V_{CC} >80% to First Output Clock Edge (31 retries). I^2C Frequency = 400kHz		360	500	ms

NOTE: V_{CCOx} denotes V_{CCO0}, V_{CCO1}, V_{CCO2}, V_{CCO3}, V_{CCO4}, V_{CCO5}, V_{CCO6}, V_{CCO7}.
NOTE: Electrical parameters are guaranteed over the specified ambient operating temperature range, which is established when the device is mounted in a test socket with maintained transverse airflow greater than 500 lfpm. The device will meet specifications after thermal equilibrium has been reached under these conditions.
NOTE 1: This parameter is guaranteed by characterization. Not tested in production.
NOTE 2: This parameter is defined in accordance with JEDEC Standard 65.
NOTE 3: Measured at the output differential cross points.
NOTE 4: Measured at $V_{CCOx}/2$ of the rising edge. All Qx and nQx outputs phase-aligned.
NOTE 5: Defined as skew within a bank of outputs at the same supply voltage and with equal load conditions running off the same clock source.
NOTE 6: Appropriate SE_MODE bit must be set to enable phase-aligned operation.
NOTE 7: Characterized in synthesizer mode. Duty cycle of bypassed signals (input reference clocks or crystal input) is not adjusted by the device.
NOTE 8: Tested in fast-lock operation after >20 minutes of locked operation to ensure holdover averaging logic is stable.
NOTE 9: Characterized with 8T49N281B-901 units (synthesizer mode).
NOTE 10: Device programmed with SWMODEn = 0 (absorbs phase differences).
NOTE 11: Tested with all outputs operating at 122.88MHz.
NOTE 12: Assuming a clear I^2C bus.
NOTE 13: This parameter is guaranteed by design.

Table 12A. Typical RMS Phase Jitter (Synthesizer Mode), V_{CC} = 3.3V ±5% or 2.5V ±5%, V_{CCOx} = 3.3V ±5%, 2.5V ±5% or 1.8V ±5% (1.8V only supported for LVCMOS outputs), T_A = -40°C to 85°C

Symbol	Parameter		Test Conditions	LVPECL	LVDS	LVCMOS[NOTE 6]	Units
tjit(ϕ)	RMS Phase Jitter (Random)	Q0, Q1	f_{OUT} = 122.88MHz, Integration Range: 12kHz - 20MHz; NOTE 1	265	286	279	fs
			f_{OUT} = 156.25MHz, Integration Range: 12kHz - 20MHz; NOTE 2	268	276	280	fs
			f_{OUT} = 622.08MHz, Integration Range: 12kHz - 20MHz; NOTE 3	259	225	N/A (NOTE 5)	fs
		Q2, Q3 Integer; NOTE 1	f_{OUT} = 122.88MHz, Integration Range: 12kHz - 20MHz	299	310	313	fs
		Q2, Q3 Fractional; NOTE 4	f_{OUT} = 122.88MHz, Integration Range: 12kHz - 20MHz	277	285	279	fs
		Q4, Q5, Q6, Q7; NOTE 1	f_{OUT} = 122.88MHz, Integration Range: 12kHz - 20MHz	284	298	293	fs

NOTE: V_{CCOx} denotes V_{CCO0}, V_{CCO1}, V_{CCO2}, V_{CCO3}, V_{CCO4}, V_{CCO5}, V_{CCO6}, V_{CCO7}.
NOTE: Fox part numbers: 277LF-40-18 and 277LF-38.88-2 used for 40MHz and 38.88MHz crystals, respectively.
NOTE: All outputs configured for the specific output type, as shown in the table.
NOTE 1: Characterized with 8T49N281B-901.
NOTE 2: Characterized with 8T49N281B-902.
NOTE 3: Characterized with 8T49N281B-903.
NOTE 4: Characterized with 8T49N281B-900.
NOTE 5: This frequency is not supported for LVCMOS operation.
NOTE 6: Qx and nQx are 180° out of phase.

Table 12B. Typical RMS Phase Jitter (Jitter Attenuator Mode), V_{CC} = 3.3V ±5% or 2.5V ±5%, V_{CCOx} = 3.3V ±5%, 2.5V ±5% or 1.8V ±5% (1.8V only supported for LVCMOS outputs), T_A = -40°C to 85°C

Symbol	Parameter		Test Conditions	LVPECL	LVDS	LVCMOS[NOTE 6]	Units
tjit(ϕ)	RMS Phase Jitter (Random)	Q0, Q1	f_{OUT} = 122.88MHz, Integration Range: 12kHz - 20MHz; NOTE 1	266	287	279	fs
			f_{OUT} = 156.25MHz, Integration Range: 12kHz - 20MHz; NOTE 2	270	263	280	fs
			f_{OUT} = 622.08MHz, Integration Range: 12kHz - 20MHz; NOTE 3	209	186	N/A (NOTE 5)	fs
		Q2, Q3 Integer; NOTE 1	f_{OUT} = 122.88MHz, Integration Range: 12kHz - 20MHz	300	311	313	fs
		Q2, Q3 Fractional; NOTE 4	f_{OUT} = 122.88MHz, Integration Range: 12kHz - 20MHz	277	284	280	fs
		Q4, Q5, Q6, Q7; NOTE 1	f_{OUT} = 122.88MHz, Integration Range: 12kHz - 20MHz	284	298	293	fs

NOTE: V_{CCOx} denotes V_{CCO0}, V_{CCO1}, V_{CCO2}, V_{CCO3}, V_{CCO4}, V_{CCO5}, V_{CCO6}, V_{CCO7}.
NOTE: Measured using a Rohde & Schwarz SMA100A as the input source.
NOTE: Fox part numbers: 277LF-40-18 and 277LF-38.88-2 used for 40MHz and 38.88MHz crystals, respectively.
NOTE: All outputs configured for the specific output type, as shown in the table.
NOTE 1: Characterized with 8T49N281B-905.
NOTE 2: Characterized with 8T49N281B-906.
NOTE 3: Characterized with 8T49N281B-907.
NOTE 4: Characterized with 8T49N281B-904.
NOTE 5: This frequency is not supported for LVCMOS operation.
NOTE 6: Qx and nQx are 180° out of phase.

Table 13A. PCI Express Jitter Specifications, $V_{CC} = V_{CCOx} = 3.3V \pm 5\%$, T_A = -40°C to 85°C

Symbol	Parameter	Test Conditions	Minimum	Typical	Maximum	PCIe Industry Specification	Units
tj (PCIe Gen 1)	Phase Jitter Peak-to-Peak; NOTE 1, 4, 5	*f* = 100MHz, 40MHz Crystal Input, Evaluation Band: 0Hz - Nyquist (clock frequency/2)		8	30	86	ps
$t_{REFCLK_HF_RMS}$ (PCIe Gen 2)	Phase Jitter RMS; NOTE 2, 4, 5	*f* = 100MHz, 40MHz Crystal Input, High Band: 1.5MHz - Nyquist (clock frequency/2)		0.5	2	3.10	ps
$t_{REFCLK_LF_RMS}$ (PCIe Gen 2)	Phase Jitter RMS; NOTE 2, 4, 5	*f* = 100MHz, 40MHz Crystal Input, Low Band: 10kHz - 1.5MHz		0.04	0.2	3.0	ps
t_{REFCLK_RMS} (PCIe Gen 3)	Phase Jitter RMS; NOTE 3, 4, 5	*f* = 100MHz, 40MHz Crystal Input, Evaluation Band: 0Hz - Nyquist (clock frequency/2)		0.1	0.4	0.8	ps

NOTE: V_{CCOx} denotes V_{CCO0}, V_{CCO1}, V_{CCO2}, V_{CCO3}, V_{CCO4}, V_{CCO5}, V_{CCO6}, V_{CCO7}.
NOTE: Electrical parameters are guaranteed over the specified ambient operating temperature range, which is established when the device is mounted in a test socket with maintained transverse airflow greater than 500 lfpm. The device will meet specifications after thermal equilibrium has been reached under these conditions.
NOTE 1: Peak-to-Peak jitter after applying system transfer function for the Common Clock Architecture. Maximum limit for PCI Express Gen 1
NOTE 2: RMS jitter after applying the two evaluation bands to the two transfer functions defined in the Common Clock Architecture and reporting the worst case results for each evaluation band. Maximum limit for PCI Express Generation 2 is 3.1ps RMS for $t_{REFCLK_HF_RMS}$ (High Band) and 3.0ps RMS for $t_{REFCLK_LF_RMS}$ (Low Band).
NOTE 3: RMS jitter after applying system transfer function for the common clock architecture. This specification is based on the PCI Express Base Specification Revision 0.7, October 2009 and is subject to change pending the final release version of the specification.
NOTE 4: This parameter is guaranteed by characterization. Not tested in production.
NOTE 5: Outputs configured for LVPECL mode. Fox 277LF-40-18 crystal used with doubler logic enabled.

Table 13B. PCI Express Jitter Specifications, $V_{CC} = V_{CCOx} = 2.5V \pm 5\%$, T_A = -40°C to 85°C

Symbol	Parameter	Test Conditions	Minimum	Typical	Maximum	PCIe Industry Specification	Units
tj (PCIe Gen 1)	Phase Jitter Peak-to-Peak; NOTE 1, 4, 5	*f* = 100MHz, 40MHz Crystal Input, Evaluation Band: 0Hz - Nyquist (clock frequency/2)		12	65	86	ps
$t_{REFCLK_HF_RMS}$ (PCIe Gen 2)	Phase Jitter RMS; NOTE 2, 4, 5	*f* = 100MHz, 40MHz Crystal Input, High Band: 1.5MHz - Nyquist (clock frequency/2)		0.8	3.10	3.10	ps
$t_{REFCLK_LF_RMS}$ (PCIe Gen 2)	Phase Jitter RMS; NOTE 2, 4, 5	*f* = 100MHz, 40MHz Crystal Input, Low Band: 10kHz - 1.5MHz		0.05	0.4	3.0	ps
t_{REFCLK_RMS} (PCIe Gen 3)	Phase Jitter RMS; NOTE 3, 4, 5	*f* = 100MHz, 40MHz Crystal Input, Evaluation Band: 0Hz - Nyquist (clock frequency/2)		0.2	0.8	0.8	ps

NOTE: V_{CCOx} denotes V_{CCO0}, V_{CCO1}, V_{CCO2}, V_{CCO3}, V_{CCO4}, V_{CCO5}, V_{CCO6}, V_{CCO7}.
NOTE: Electrical parameters are guaranteed over the specified ambient operating temperature range, which is established when the device is mounted in a test socket with maintained transverse airflow greater than 500 lfpm. The device will meet specifications after thermal equilibrium has been reached under these conditions.
NOTE 1: Peak-to-Peak jitter after applying system transfer function for the Common Clock Architecture. Maximum limit for PCI Express Gen 1
NOTE 2: RMS jitter after applying the two evaluation bands to the two transfer functions defined in the Common Clock Architecture and reporting the worst case results for each evaluation band. Maximum limit for PCI Express Generation 2 is 3.1ps RMS for $t_{REFCLK_HF_RMS}$ (High Band) and 3.0ps RMS for $t_{REFCLK_LF_RMS}$ (Low Band).
NOTE 3: RMS jitter after applying system transfer function for the common clock architecture. This specification is based on the PCI Express Base Specification Revision 0.7, October 2009 and is subject to change pending the final release version of the specification.
NOTE 4: This parameter is guaranteed by characterization. Not tested in production.
NOTE 5: Outputs configured for LVPECL mode. Fox 277LF-40-18 crystal used with doubler logic enabled.

Typical Phase Noise at 156.25MHz

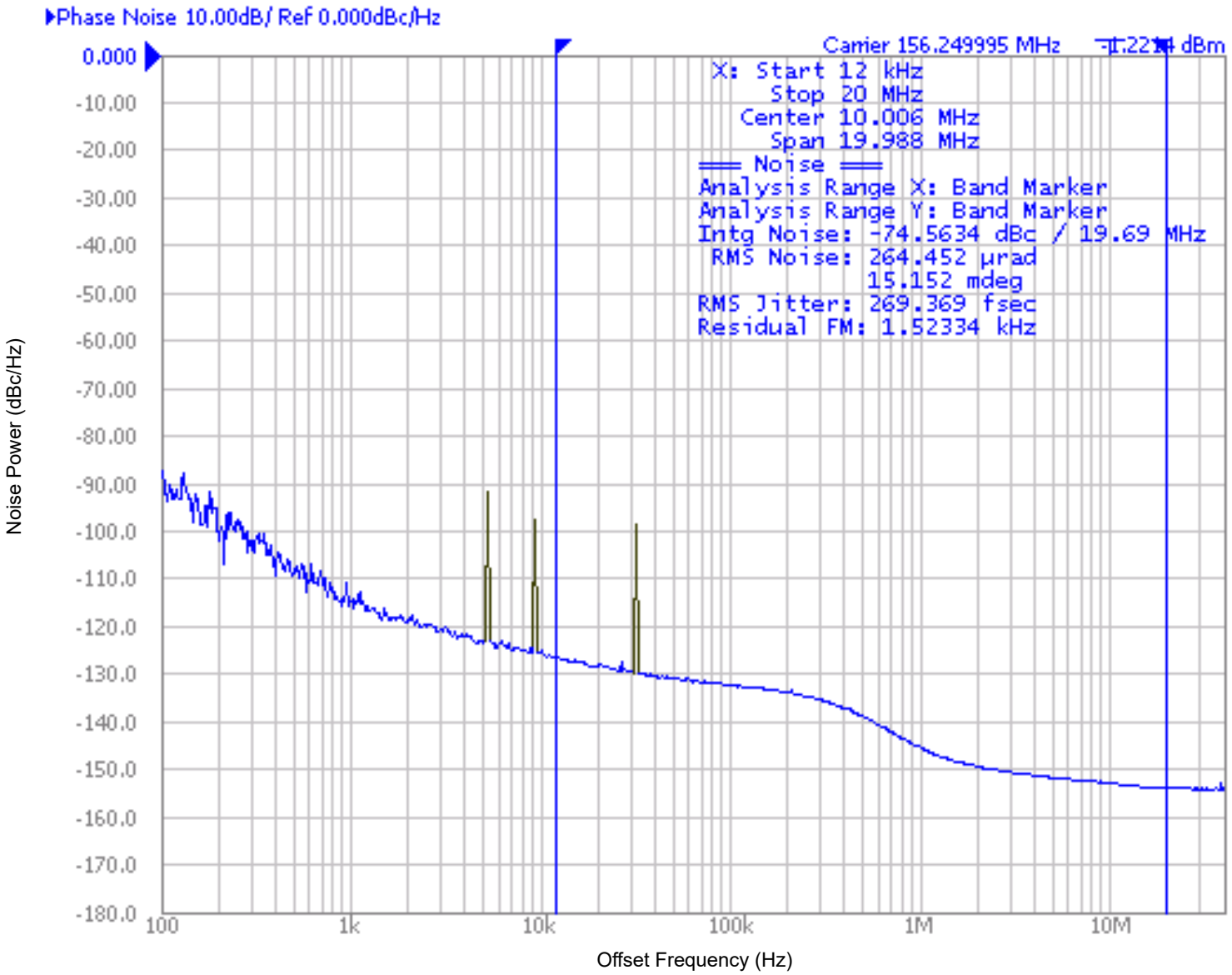

Applications Information

Overdriving the XTAL Interface

The OSCI input can be overdriven by an LVCMOS driver or by one side of a differential driver through an AC coupling capacitor. The OSCO pin can be left floating. The amplitude of the input signal should be between 500mV and 1.8V and the slew rate should not be less than 0.2V/ns. For 3.3V LVCMOS inputs, the amplitude must be reduced from full swing to at least half the swing in order to prevent signal interference with the power rail and to reduce internal noise. Figure 5A shows an example of the interface diagram for a high speed 3.3V LVCMOS driver. This configuration requires that the sum of the output impedance of the driver (Ro) and the series resistance (Rs) equals the transmission line impedance. In addition, matched termination at the crystal input will attenuate the signal in half. This can be done in one of two ways. First, R1 and R2 in parallel should equal the transmission line impedance. For most 50Ω applications, R1 and R2 can be 100Ω. This can also be accomplished by removing R1 and changing R2 to 50Ω. The values of the resistors can be increased to reduce the loading for a slower and weaker LVCMOS driver. Figure 5B shows an example of the interface diagram for an LVPECL driver. This is a standard LVPECL termination with one side of the driver feeding the OSCI input. It is recommended that all components in the schematics be placed in the layout. Though some components might not be used, they can be utilized for debugging purposes. The datasheet specifications are characterized and guaranteed by using a quartz crystal as the input.

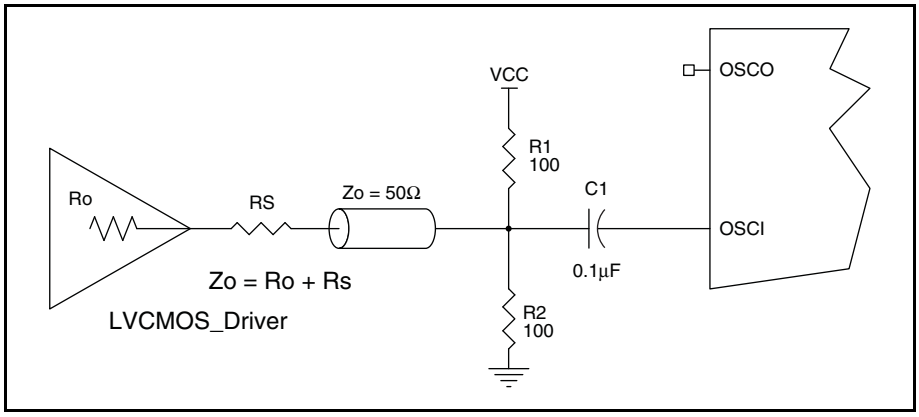

Figure 5A. General Diagram for LVCMOS Driver to XTAL Input Interface

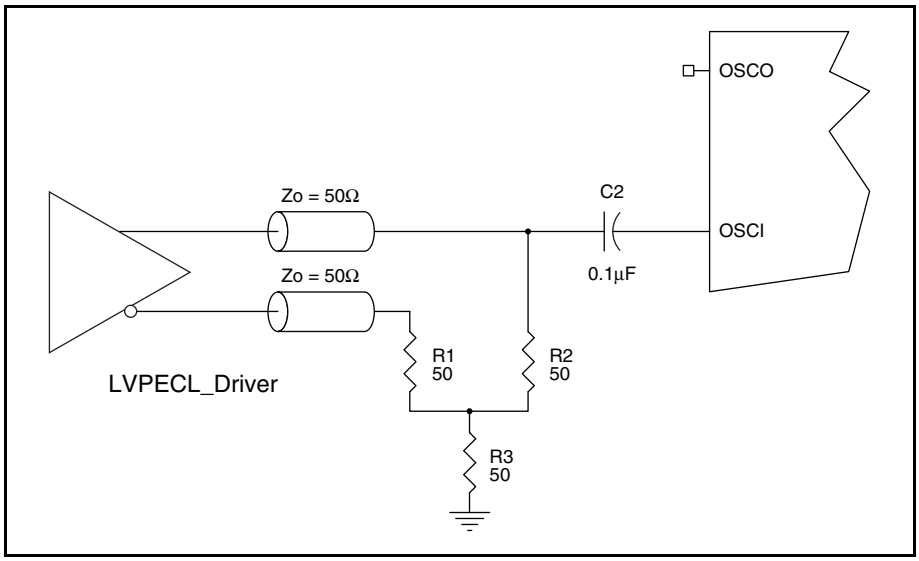

Figure 5B. General Diagram for LVPECL Driver to XTAL Input Interface

Wiring the Differential Input to Accept Single-Ended Levels

Figure 6 shows how a differential input can be wired to accept single ended levels. The reference voltage $V_{REF} = V_{CC}/2$ is generated by the bias resistors R1 and R2. The bypass capacitor (C1) is used to help filter noise on the DC bias. This bias circuit should be located as close to the input pin as possible. The ratio of R1 and R2 might need to be adjusted to position the V_{REF} in the center of the input voltage swing. For example, if the input clock swing is 2.5V and V_{CC} = 3.3V, R1 and R2 value should be adjusted to set V_{REF} at 1.25V. The values below are for when both the single ended swing and V_{CC} are at the same voltage. This configuration requires that the sum of the output impedance of the driver (Ro) and the series resistance (Rs) equals the transmission line impedance. In addition, matched termination at the input will attenuate the signal in half. This can be done in one of two ways. First, R3 and R4 in parallel should equal the transmission line impedance. For most 50Ω applications, R3 and R4 can be 100Ω. The values of the resistors can be increased to reduce the loading for slower and weaker LVCMOS driver. When using single-ended signaling, the noise rejection benefits of differential signaling are reduced. Even though the differential input can handle full rail LVCMOS signaling, it is recommended that the amplitude be reduced. The datasheet specifies a lower differential amplitude, however this only applies to differential signals. For single-ended applications, the swing can be larger, however V_{IL} cannot be less than -0.3V and V_{IH} cannot be more than V_{CC} + 0.3V. Though some of the recommended components might not be used, the pads should be placed in the layout. They can be utilized for debugging purposes. The datasheet specifications are characterized and guaranteed by using a differential signal.

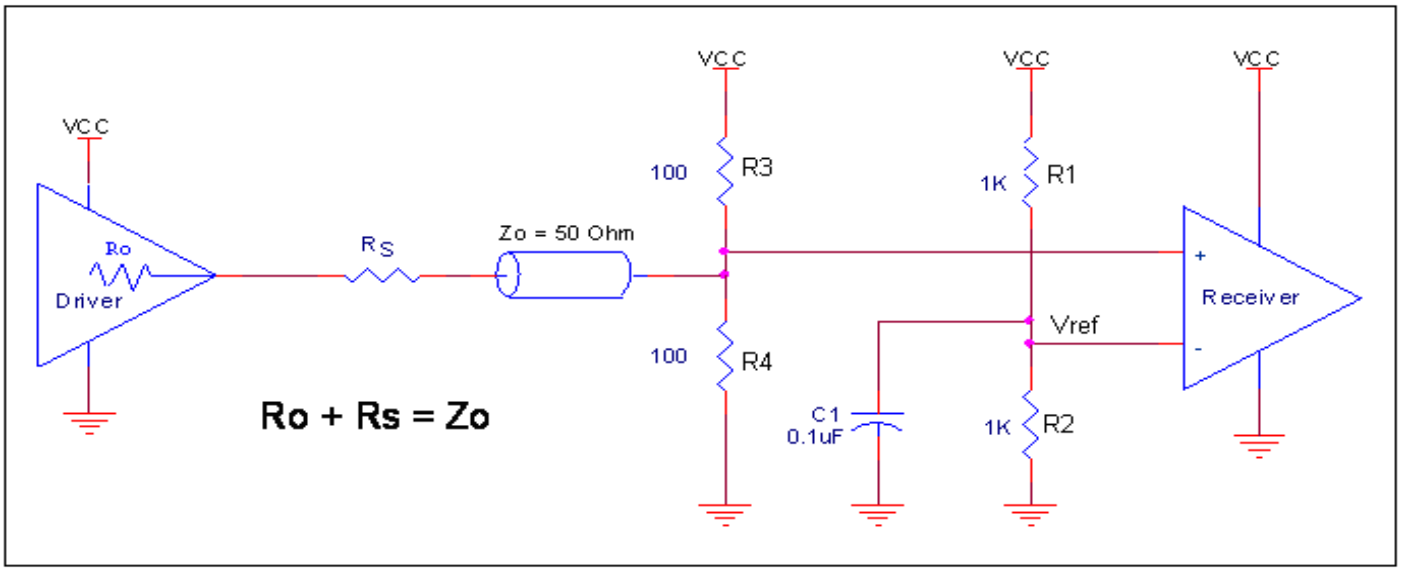

Figure 6. Recommended Schematic for Wiring a Differential Input to Accept Single-ended Levels

3.3V Differential Clock Input Interface

CLKx/nCLKx accepts LVDS, LVHSTL, LVPECL, HCSL and other differential signals. Both V_{SWING} and V_{OH} must meet the V_{PP} and V_{CMR} input requirements. Figure 7A to Figure 7E show interface examples for the CLKx/nCLKx input driven by the most common driver types. The input interfaces suggested here are examples only.

Please consult with the vendor of the driver component to confirm the driver termination requirements. For example, in Figure 7A, the input termination applies for IDT open emitter LVHSTL drivers. If you are using an LVHSTL driver from another vendor, use their termination recommendation.

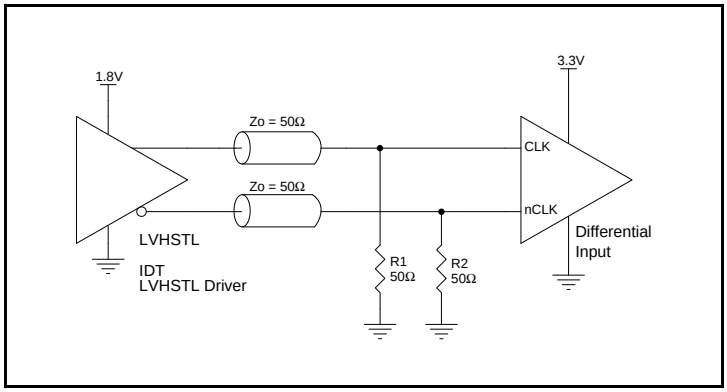

Figure 7A. CLKx/nCLKx Input Driven by an IDT Open Emitter LVHSTL Driver

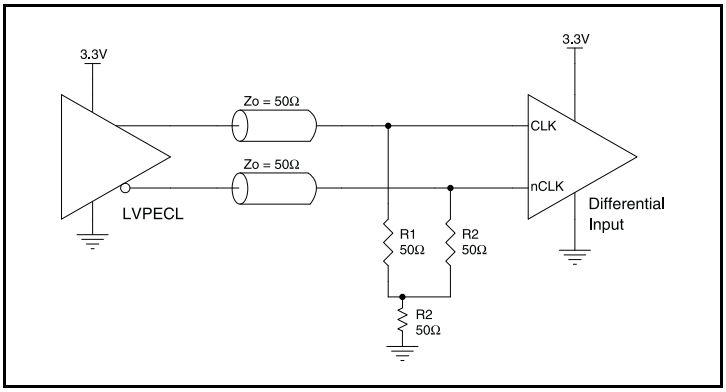

Figure 7D. CLKx/nCLKx Input Driven by a 3.3V LVPECL Driver

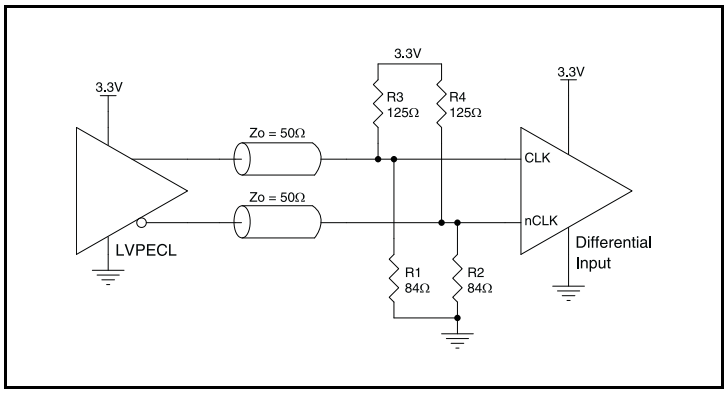

Figure 7B. CLKx/nCLKx Input Driven by a 3.3V LVPECL Driver

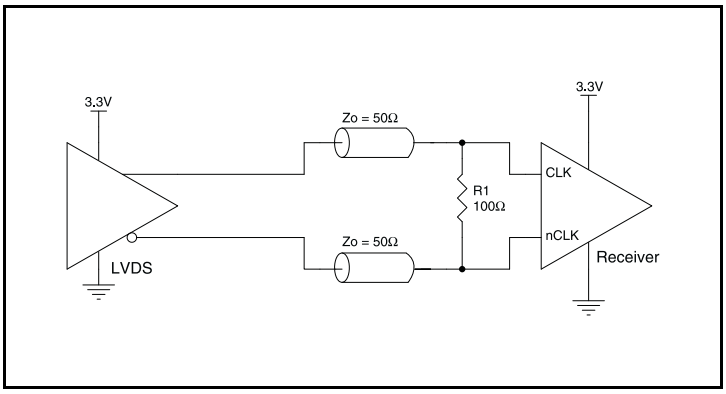

Figure 7E. CLKx/nCLKx Input Driven by a 3.3V LVDS Driver

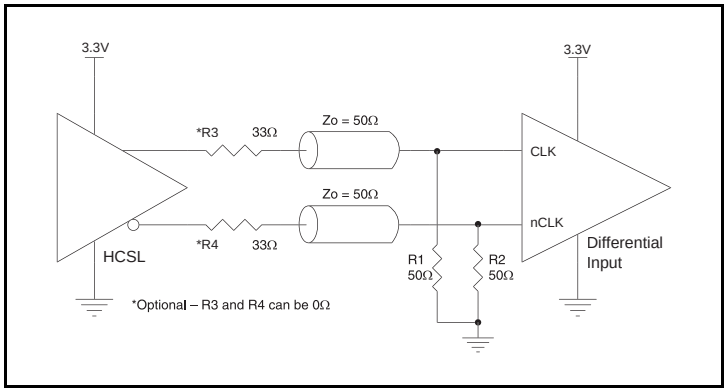

Figure 7C. CLKx/nCLKx Input Driven by a 3.3V HCSL Driver

2.5V Differential Clock Input Interface

CLKx/nCLKx accepts LVDS, LVHSTL, LVPECL and other differential signals. Both V_{SWING} and V_{OH} must meet the V_{PP} and V_{CMR} input requirements. Figure 8A to Figure 8D show interface examples for the CLKx/nCLKx input driven by the most common driver types. The input interfaces suggested here are examples only. Please consult with the vendor of the driver component to confirm the driver termination requirements. For example, in Figure 8A, the input termination applies for IDT open emitter LVHSTL drivers. If you are using an LVHSTL driver from another vendor, use their termination recommendation.

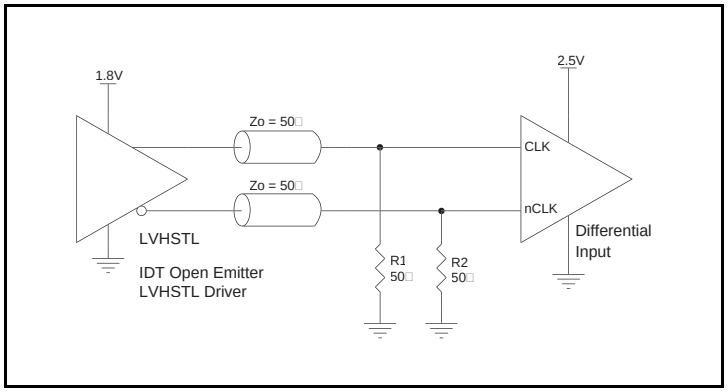

Figure 8A. CLKx/nCLKx Input Driven by an IDT Open Emitter LVHSTL Driver

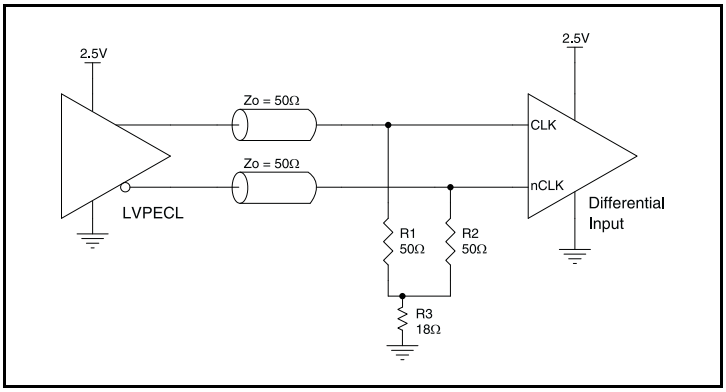

Figure 8C. CLKx/nCLKx Input Driven by a 2.5V LVPECL Driver

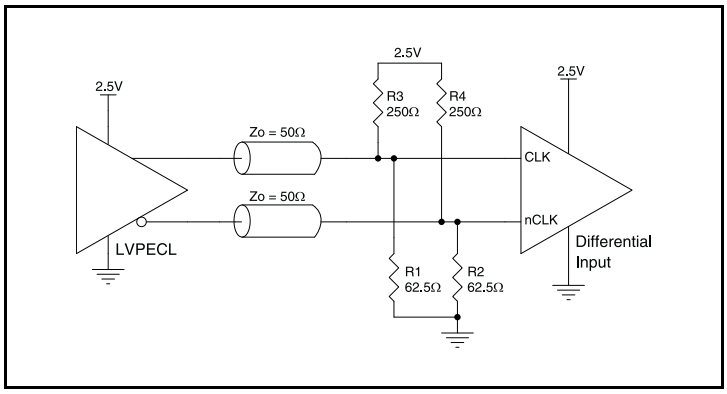

Figure 8B. CLKx/nCLKx Input Driven by a 2.5V LVPECL Driver

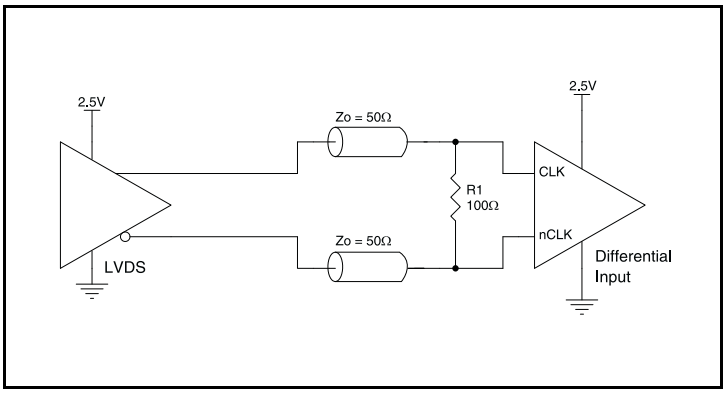

Figure 8D. CLKx/nCLKx Input Driven by a 2.5V LVDS Driver

Recommendations for Unused Input and Output Pins

Inputs:

CLKx/nCLKx Input

For applications not requiring the use one or more reference clock inputs, both CLKx and nCLKx can be left floating. Though not required, but for additional protection, a 1kΩ resistor can be tied from CLKx to ground. It is recommended that CLKx, nCLKx not be driven with active signals when not enabled for use.

LVCMOS Control Pins

All control pins have internal pullups or pulldowns; additional resistance is not required but can be added for additional protection. A 1kΩ resistor can be used.

Outputs:

LVPECL Outputs

Any unused LVPECL output pairs can be left floating. We recommend that there is no trace attached. Both sides of the differential output pair should either be left floating or terminated.

LVDS Outputs

Any unused LVDS output pairs can be either left floating or terminated with 100Ω across. If they are left floating there should be no trace attached.

LVCMOS Outputs

Any LVCMOS output can be left floating if unused. There should be no trace attached.

LVDS Driver Termination

For a general LVDS interface, the recommended value for the termination impedance (Z_T) is between 90Ω and 132Ω. The actual value should be selected to match the differential impedance (Z_0) of your transmission line. A typical point-to-point LVDS design uses a 100Ω parallel resistor at the receiver and a 100Ω differential transmission-line environment. In order to avoid any transmission-line reflection issues, the components should be surface mounted and must be placed as close to the receiver as possible. IDT offers a full line of LVDS compliant devices with two types of output structures: current source and voltage source. The standard termination schematic as shown in Figure 9A can be used with either type of output structure. Figure 9B, which can also be used with both output types, is an optional termination with center tap capacitance to help filter common mode noise. The capacitor value should be approximately 50pF. If using a non-standard termination, it is recommended to contact IDT and confirm if the output structure is current source or voltage source type. In addition, since these outputs are LVDS compatible, the input receiver's amplitude and common-mode input range should be verified for compatibility with the output.

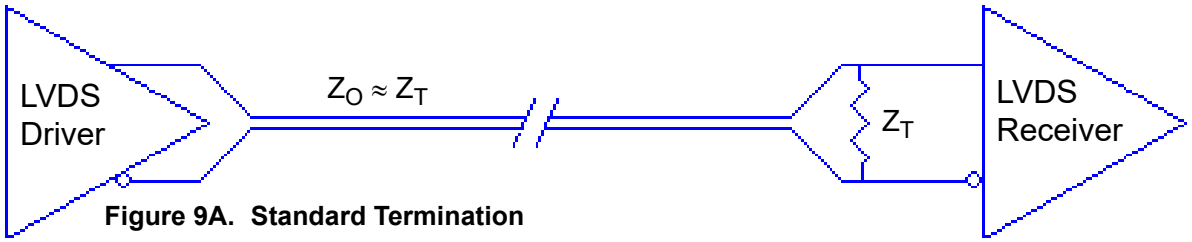

Figure 9A. Standard Termination

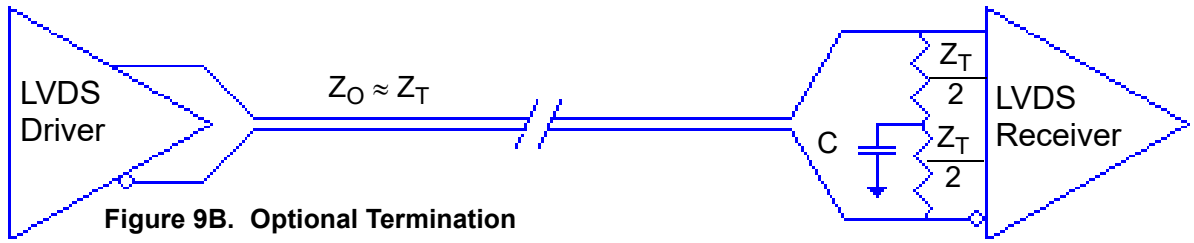

Figure 9B. Optional Termination

Termination for 3.3V LVPECL Outputs

The clock layout topology shown below is a typical termination for LVPECL outputs. The two different layouts mentioned are recommended only as guidelines.

The differential outputs generate ECL/LVPECL compatible outputs. Therefore, terminating resistors (DC current path to ground) or current sources must be used for functionality. These outputs are designed to drive 50Ω transmission lines. Matched impedance techniques should be used to maximize operating frequency and minimize signal distortion. Figure 10A and Figure 10B show two different layouts which are recommended only as guidelines. Other suitable clock layouts may exist and it would be recommended that the board designers simulate to guarantee compatibility across all printed circuit and clock component process variations.

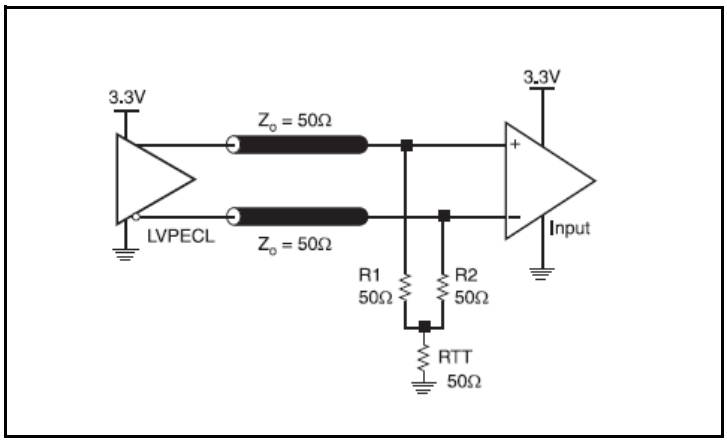

Figure 10A. 3.3V LVPECL Output Termination

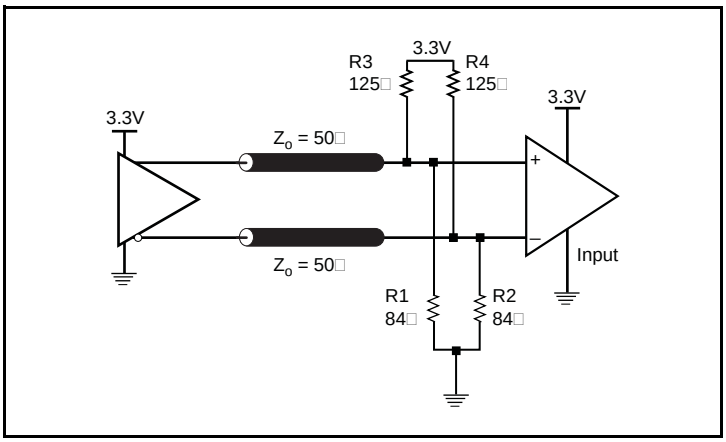

Figure 10B. 3.3V LVPECL Output Termination

Termination for 2.5V LVPECL Outputs

Figure 11A and Figure 11C show examples of termination for 2.5V LVPECL driver. These terminations are equivalent to terminating 50Ω to V_{CCO} – 2V. For V_{CCO} = 2.5V, the V_{CCO} – 2V is very close to ground level. The R3 in Figure 11C can be eliminated and the termination is shown in *Figure 11B.*

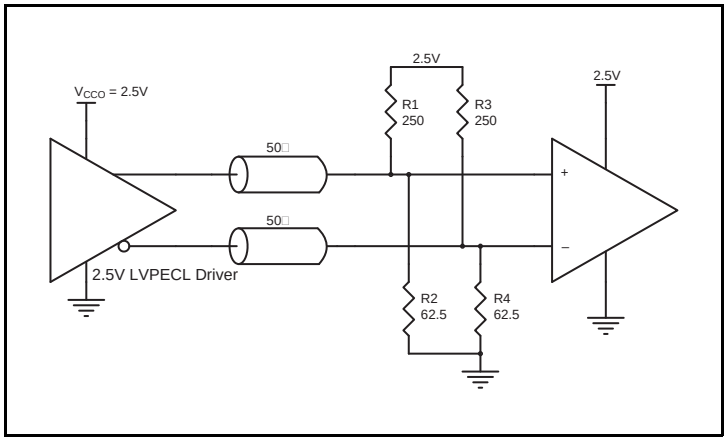

Figure 11A. 2.5V LVPECL Driver Termination Example

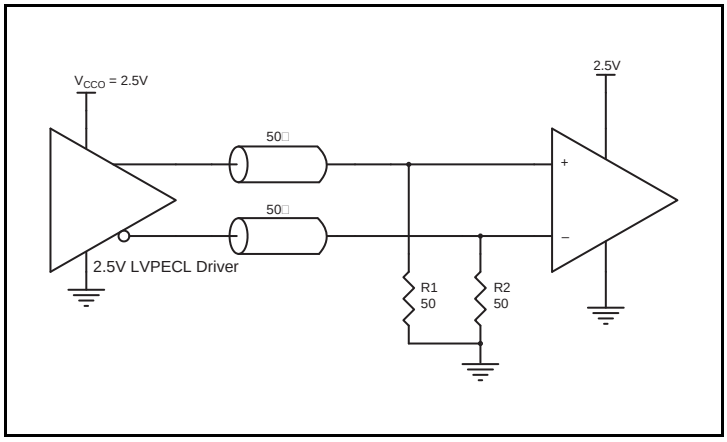

Figure 11B. 2.5V LVPECL Driver Termination Example

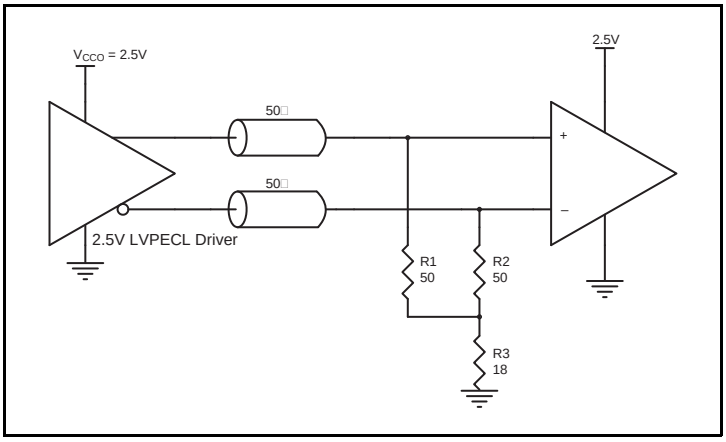

Figure 11C. 2.5V LVPECL Driver Termination Example

VFQFN EPAD Thermal Release Path

In order to maximize both the removal of heat from the package and the electrical performance, a land pattern must be incorporated on the Printed Circuit Board (PCB) within the footprint of the package corresponding to the exposed metal pad or exposed heat slug on the package, as shown in *Figure 12*. The solderable area on the PCB, as defined by the solder mask, should be at least the same size/shape as the exposed pad/slug area on the package to maximize the thermal/electrical performance. Sufficient clearance should be designed on the PCB between the outer edges of the land pattern and the inner edges of pad pattern for the leads to avoid any shorts.

While the land pattern on the PCB provides a means of heat transfer and electrical grounding from the package to the board through a solder joint, thermal vias are necessary to effectively conduct from the surface of the PCB to the ground plane(s). The land pattern must be connected to ground through these vias. The vias act as “heat pipes”. The number of vias (i.e. “heat pipes”) are application specific and dependent upon the package power dissipation as well as electrical conductivity requirements. Thus, thermal and electrical analysis and/or testing are recommended to determine the minimum number needed. Maximum thermal and electrical performance is achieved when an array of vias is incorporated in the land pattern. It is recommended to use as many vias connected to ground as possible. It is also recommended that the via diameter should be 12 to 13mils (0.30 to 0.33mm) with 1oz copper via barrel plating. This is desirable to avoid any solder wicking inside the via during the soldering process which may result in voids in solder between the exposed pad/slug and the thermal land. Precautions should be taken to eliminate any solder voids between the exposed heat slug and the land pattern. Note: These recommendations are to be used as a guideline only. For further information, please refer to the Application Note on the Surface Mount Assembly of Amkor’s Thermally/ Electrically Enhance Lead frame Base Package, Amkor Technology.

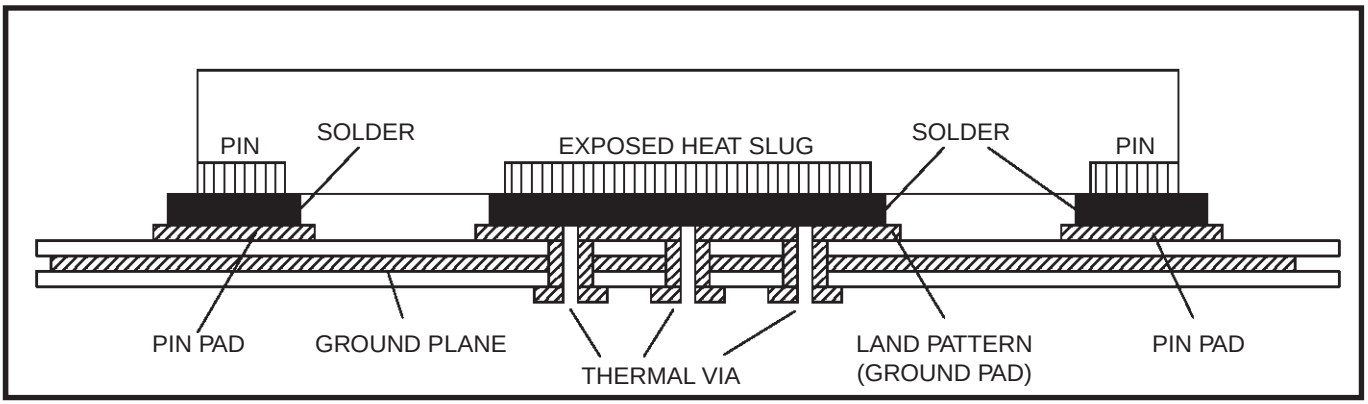

Figure 12. P.C. Assembly for Exposed Pad Thermal Release Path – Side View (drawing not to scale)

Schematic and Layout Information

Schematics for 8T49N281I can be found on IDT.com. Please search for the 8T49N281 device and click on the link for evaluation board schematics.

Crystal Recommendation

This device was validated using FOX 277LF series through-hole crystals including part #277LF-40-18 (40MHz) and 277LF-38.88-2 (38.88MHz). If a surface mount crystal is desired, we recommend FOX Part #603-40-48 (40MHz) or 603-38.88-7 (38.88MHz).

I^2C Serial EEPROM Recommendation

The 8T49N281 was designed to operate with most standard I^2C serial EEPROMs of 256 bytes or larger. Atmel AT24C04C was used during device characterization and is recommended for use. Please contact IDT for review of any other I^2C EEPROM’s compatibility with the 8T49N281.

PCI Express Application Note

PCI Express jitter analysis methodology models the system response to reference clock jitter. The block diagram below shows the most frequently used *Common Clock Architecture* in which a copy of the reference clock is provided to both ends of the PCI Express Link.

In the jitter analysis, the transmit (Tx) and receive (Rx) serdes PLLs are modeled as well as the phase interpolator in the receiver. These transfer functions are called H1, H2, and H3 respectively. The overall system transfer function at the receiver is:

$$Ht(s) = H3(s) \times [H1(s) - H2(s)]$$

The jitter spectrum seen by the receiver is the result of applying this system transfer function to the clock spectrum X(s) and is:

$$Y(s) = X(s) \times H3(s) \times [H1(s) - H2(s)]$$

In order to generate time domain jitter numbers, an inverse Fourier Transform is performed on X(s)*H3(s) * [H1(s) - H2(s)].

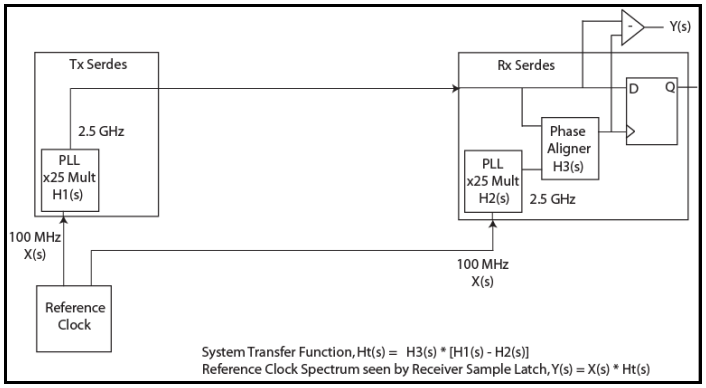

PCI Express Common Clock Architecture

For **PCI Express Gen 1**, one transfer function is defined and the evaluation is performed over the entire spectrum: DC to Nyquist (e.g for a 100MHz reference clock: 0Hz – 50MHz) and the jitter result is reported in peak-peak.

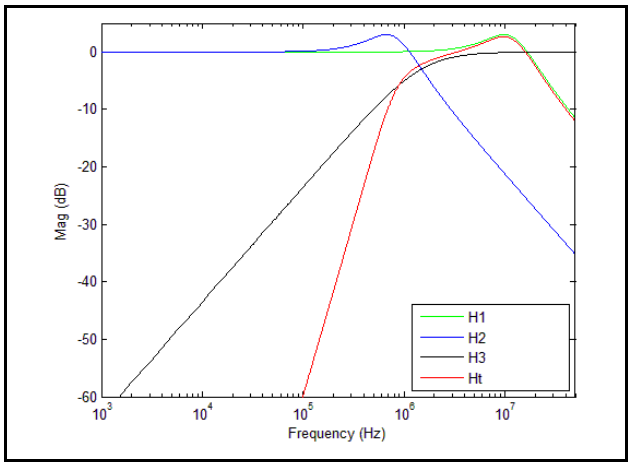

PCIe Gen 1 Magnitude of Transfer Function

For **PCI Express Gen 2**, two transfer functions are defined with 2 evaluation ranges and the final jitter number is reported in rms. The two evaluation ranges for PCI Express Gen 2 are 10kHz – 1.5MHz (Low Band) and 1.5MHz – Nyquist (High Band). The plots show the individual transfer functions as well as the overall transfer function Ht.

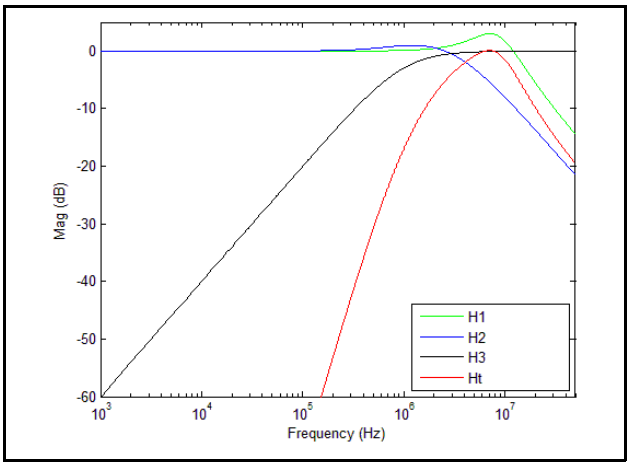

PCIe Gen 2A Magnitude of Transfer Function

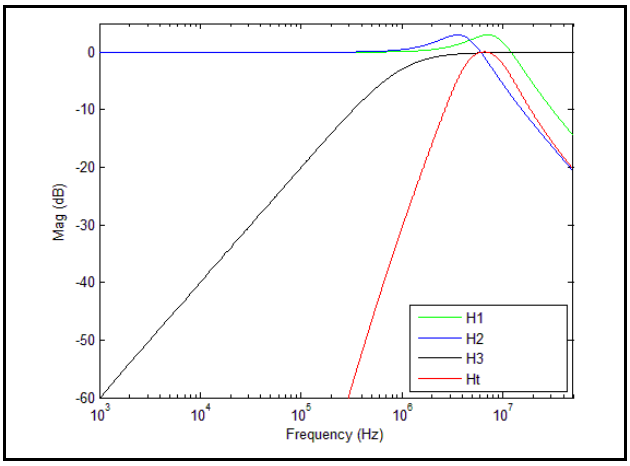

PCIe Gen 2B Magnitude of Transfer Function

For **PCI Express Gen 3**, one transfer function is defined and the evaluation is performed over the entire spectrum. The transfer function parameters are different from Gen 1 and the jitter result is reported in RMS.

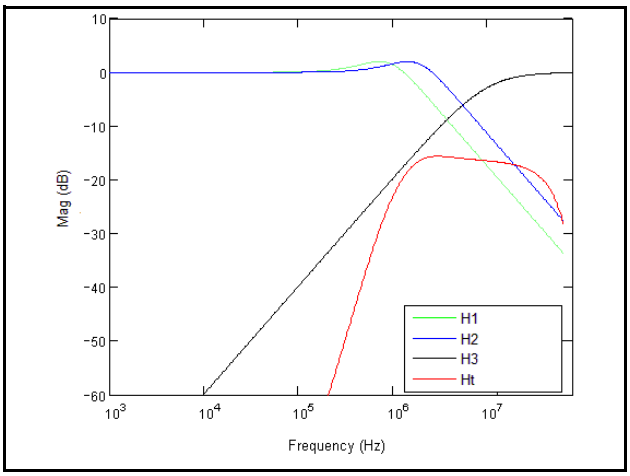

PCIe Gen 3 Magnitude of Transfer Function

For a more thorough overview of PCI Express jitter analysis methodology, please refer to IDT Application Note *PCI Express Reference Clock Requirements.*

Power Dissipation and Thermal Considerations

The 8T49N281 is a multi-functional, high speed device that targets a wide variety of clock frequencies and applications. Since this device is highly programmable with a broad range of features and functionality, the power consumption will vary as each of these features and functions is enabled.

The 8T49N281 device was designed and characterized to operate within the ambient industrial temperature range of -40°C to +85°C. The ambient temperature represents the temperature around the device, not the junction temperature. When using the device in extreme cases, such as maximum operating frequency and high ambient temperature, external air flow may be required in order to ensure a safe and reliable junction temperature. Extreme care must be taken to avoid exceeding 125°C junction temperature.

The power calculation examples below were generated using a maximum ambient temperature and supply voltage. For many applications, the power consumption will be much lower. Please contact IDT technical support for any concerns on calculating the power dissipation for your own specific configuration.

Power Domains

The 8T49N281 device has a number of separate power domains that can be independently enabled and disabled via register accesses (all power supply pins must still be connected to a valid supply voltage). Figure 13 below indicates the individual domains and the associated power pins.

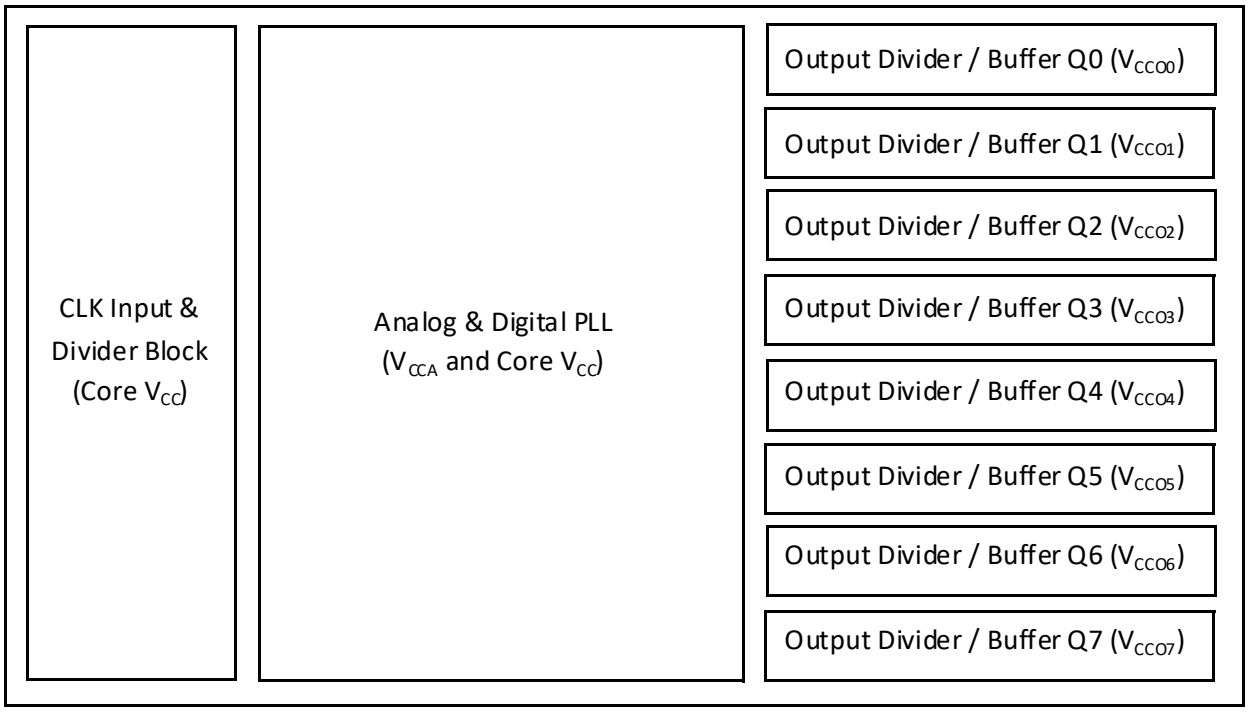

Figure 13. 8T49N281 Power Domains

For the output paths shown above, there are three different structures that are used. Q0 and Q1 use one output path structure, Q2 and Q3 use a second structure and Q[4:7] use a 3rd structure. Power consumption data will vary slightly depending on the structure used as shown in the appropriate tables below.

Power Consumption Calculation

Determining total power consumption involves several steps:

1. Determine the power consumption using maximum current values for core and analog voltage supplies from Table 7A and Table 7B.
2. Determine the nominal power consumption of each enabled output path.
   a. This consists of a base amount of power that is independent of operating frequency, as shown in Table 15A through Table 15G (depending on the chosen output protocol).
   b. Then there is a variable amount of power that is related to the output frequency. This can be determined by multiplying the output frequency by the FQ_Factor shown in Table 15A through Table 15G.
3. All of the above totals are then summed.

Thermal Considerations

Once the total power consumption has been determined, it is necessary to calculate the maximum operating junction temperature for the device under the environmental conditions it will operate in. Thermal conduction paths, air flow rate and ambient air temperature are factors that can affect this. The thermal conduction path refers to whether heat is to be conducted away via a heatsink, via airflow or via conduction into the PCB through the device pads (including the ePAD). Thermal conduction data is provided for typical scenarios in Table 14 below. Please contact IDT for assistance in calculating results under other scenarios.

Table 14. Thermal Resistance θ_{JA} for 56-Lead VFQFN, Forced Convection

θ_{JA} by Velocity			
Meters per Second	**0**	**1**	**2**
Multi-Layer PCB, JEDEC Standard Test Boards	16.0°C/W	12.14°C/W	11.02°C/W

Current Consumption Data and Equations

Table 15A. 3.3V LVPECL Output Calculation Table

LVPECL	FQ_Factor (mA/MHz)	Base_Current (mA)
Q0	0.00624	40.3
Q1		
Q2	0.01445	63.6
Q3		
Q4	0.00609	42.2
Q5		
Q6		
Q7		

Table 15B. 2.5V LVPECL Output Calculation Table

LVPECL	FQ_Factor (mA/MHz)	Base_Current (mA)
Q0	0.00409	33.0
Q1		
Q2	0.01179	56.4
Q3		
Q4	0.00369	35.4
Q5		
Q6		
Q7		

Table 15C. 3.3V LVDS Output Calculation Table

LVDS	FQ_Factor (mA/MHz)	Base_Current (mA)
Q0	0.00664	49.6
Q1		
Q2	0.01479	73.0
Q3		
Q4	0.00646	51.5
Q5		
Q6		
Q7		

Table 15D. 2.5V LVDS Output Calculation Table

LVDS	FQ_Factor (mA/MHz)	Base_Current (mA)
Q0	0.00412	41.9
Q1		
Q2	0.01217	65.3
Q3		
Q4	0.00425	43.6
Q5		
Q6		
Q7		

Table 15E. 3.3V LVCMOS Output Calculation Table

LVCMOS	Base_Current (mA)
Q0	37.5
Q1	
Q2	61.1
Q3	
Q4	40.1
Q5	
Q6	
Q7	

Table 15F. 2.5V LVCMOS Output Calculation Table

LVCMOS	Base_Current (mA)
Q0	31.0
Q1	
Q2	54.6
Q3	
Q4	33.2
Q5	
Q6	
Q7	

Table 15G. 1.8V LVCMOS Output Calculation Table

LVCMOS	Base_Current (mA)
Q0	26.8
Q1	
Q2	50.4
Q3	
Q4	29.0
Q5	
Q6	
Q7	

Applying the values to the following equation will yield output current by frequency:

Qx Current (mA) = FQ_Factor * Frequency (MHz) + Base_Current

where:

Qx Current is the specific output current according to output type and frequency

FQ_Factor is used for calculating current increase due to output frequency

Base_Current is the base current for each output path independent of output frequency

The second step is to multiply the power dissipated by the thermal impedance to determine the maximum power gradient, using the following equation:

$T_J = T_A + (\theta_{JA} * Pd_{total})$

where:

T_J is the junction temperature (°C)

T_A is the ambient temperature (°C)

θ_{JA} is the thermal resistance value from Table 14, dependent on ambient airflow (°C/W)

Pd_{total} is the total power dissipation of the 8T49N281 under usage conditions, including power dissipated due to loading (W)

Note that for LVPECL outputs the power dissipation through the load is assumed to be 27.95mW. When selecting LVCMOS outputs, power dissipation through the load will vary based on a variety of factors including termination type and trace length. For these examples, power dissipation through loading will be calculated using C_{PD} (found in Table 2) and output frequency:

$Pd_{OUT} = C_{PD} * F_{OUT} * V_{CCO}^2$

where:

Pd_{OUT} is the power dissipation of the output (W)

C_{PD} is the power dissipation capacitance (pF)

F_{OUT} is the output frequency of the selected output (MHz)

V_{CCO} is the voltage supplied to the appropriate output (V)

Example Calculations

Example 1. Common Customer Configuration (3.3V Core Voltage)

Output	Output Type	Frequency (MHz)	V_{CCO}
Q0	LVPECL	625	3.3
Q1	LVPECL	625	3.3
Q2	LVPECL	212.5	3.3
Q3	LVPECL	212.5	3.3
Q4	LVDS	25	3.3
Q5	LVDS	25	3.3
Q6	LVCMOS	125	3.3
Q7	LVCMOS	125	3.3

- Core Supply Current, I_{CC} = **90mA (max)**
- Analog Supply Current, I_{CCA} = **187mA (max)**

Q0 Current = 0.00624x625 + 40.3 = 44.2mA

Q1 Current = 0.00624x625 + 40.3 = 44.2mA

Q2 Current = 0.01445x212.5 + 63.6 = 66.67mA

Q3 Current = 0.01445x212.5 + 63.6 = 66.67mA

Q4 Current = 0.00646x25 + 51.5 = 51.66mA

Q5 Current = 0.00646x25 + 51.5 = 51.66mA

Q6 Current = 40.1mA

Q7 Current = 40.1mA

- Total Output Current = **405.26mA (max)**

  Total Device Current = 90mA + 187mA + 405.26mA = **682.26mA**

  Total Device Power = 3.465V * 682.26mA = **2364mW**

- Power dissipated through output loading:

  LVPECL = 27.95mW * 4 = **111.8mW**

  LVDS = already accounted for in device power

  LVCMOS = 14.5pF * 125MHz * $3.465V^2$ * 2 output pairs = **43.5mW**

- Total Power = 2364mW + 111.8mW + 43.5mW = **2519.3mW or 2.52W**

With an ambient temperature of 85°C and no airflow, the junction temperature is:

T_J = 85°C + 16.0°C/W * 2.52W = **125.3°C**

This junction temperature is above the maximum allowable. In instances where maximum junction temperature is exceeded adjustments need to be made to either airflow or ambient temperature. In this case, adjusting airflow to 1m/s (θ_{JA} = 12.14°C/W) will reduce junction temperature to 115.6°C. If no airflow adjustments can be made, the maximum ambient operating temperature must be reduced by a minimum of 0.3°C.

Example 2. Low Power Customer Configuration (2.5V Core Voltage)

Output	Output Type	Frequency (MHz)	V_{CCO}
Q0	LVDS	156.25	2.5
Q1	LVDS	156.25	2.5
Q2	LVDS	161.133	2.5
Q3	LVCMOS	33.333	1.8
Q4	LVCMOS	25	1.8
Q5	LVCMOS	25	1.8
Q6	LVCMOS	25	1.8
Q7	LVDS	156.25	2.5

- Core Supply Current, I_{CC} = **85mA (max)**
- Analog Supply Current, I_{CCA} = **182mA (max)**

Q0 Current = 0.00412x156.25 + 41.9 = 42.54mA

Q1 Current = 0.00412x156.25 + 41.9 = 42.54mA

Q2 Current = 0.01217x161.133 + 65.3 = 67.26mA

Q3 Current = 50.4mA

Q4 Current = 29mA

Q5 Current = 29mA

Q6 Current = 29mA

Q7 Current = 0.00425x156.25 + 43.6 = 44.26mA

- Total Output Current = **196.6mA** (V_{CCO} = 2.5V), **137.4mA** (V_{CCO} = 1.8V)

  Total Device Power = 2.625V *(85mA + 182mA + 196.6mA) + 1.89V * 137.4mA = **1476.6mW**
- Power dissipated through output loading:

  LVPECL = n/a

  LVDS = already accounted for in device power

  LVCMOS_33.3MHz = 17pF * 33.3MHz * 1.89V^2 * 1 output pair = **2.02mW**

  LVCMOS_25MHz = 12.5pF * 25MHz * 1.89V^2 * 3 output pairs = **3.35mW**

  Total Power = 1476.6mW + 2.02mW + 3.35mW = **1481.97mW or 1.48W**

With an ambient temperature of 85°C, the junction temperature is:

T_J = 85°C + 16.0°C/W *1.48W = **108.7°C**

This junction temperature is below the maximum allowable.

Reliability Information

Table 16. θ_{JA} vs. Air Flow Table for a 56-Lead VFQFN

θ_{JA} vs. Air Flow			
Meters per Second	**0**	**1**	**2**
Multi-Layer PCB, JEDEC Standard Test Boards	16.0°C/W	12.14°C/W	11.02°C/W

NOTE: Theta JA (θ_{JA})values calculated using a 4-layer JEDEC PCB (114.3mm x 101.6mm), with 2oz. (70µm) copper plating on all 4 layers.

Transistor Count

The transistor count for 8T49N281 is: 959,346

Package Outline Drawings

The package outline drawings are appended at the end of this document and are accessible from the link below. The package information is the most current data available.

www.idt.com/document/psc/nlnlg-56-package-outline-80-x-80-mm-body-epad-660mm-sq-050-mm-pitch-vfqfp-n

Marking Diagram

1. Line 1 and Line 2 indicate the part number. “001” will vary due to configuration.
2. “Line 3 indicates the following:
   - #” denotes sequential lot number.
   - “YYWW” is the last two digits of the year and week that the part was assembled.
   - “$” denotes the mark code.

Ordering Information

Table 17. Ordering Information

Part/Order Number	Marking	Package	Shipping Packaging	Temperature
8T49N281C-dddNLGI	IDT8T49N281C-dddNLGI	“Lead-Free” 56-Lead VFQFN	Tray	-40°C to +85°C
8T49N281C-dddNLGI8	IDT8T49N281C-dddNLGI	“Lead-Free” 56-Lead VFQFN	Tape & Reel, Pin 1 Orientation: EIA-481-C	-40°C to +85°C
8T49N281C-dddNLGI#	IDT8T49N281C-dddNLGI	“Lead-Free” 56-Lead VFQFN	Tape & Reel, Pin 1 Orientation: EIA-481-D	-40°C to +85°C

NOTE: For the specific -ddd order codes, refer to *FemtoClock NG Universal Frequency Translator Ordering Product Information* document.

Table 18. Pin 1 Orientation in Tape and Reel Packaging

Part Number Suffix	Pin 1 Orientation	Illustration
NLGI8	Quadrant 1 (EIA-481-C)	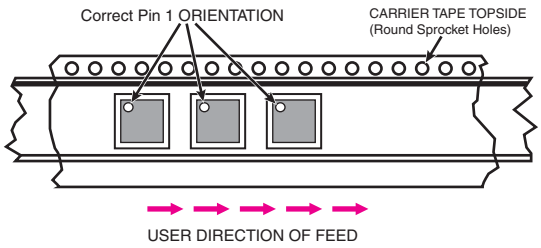
NLGI#	Quadrant 2 (EIA-481-D)	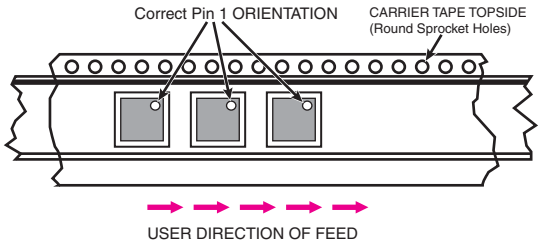

ERRATA

Errata # 1: EEPROM CRC Check Failure

- Errata: if the UFT++ attempts to load its initial configuration from an external EEPROM and the CRC check fails, the serial port will not complete write operations and will only respond to reads with values of 0 until device is reset via nRST pin.

  - if no EEPROM access is attempted, no EEPROM is found or the EEPROM read succeeds there are no issues

  - The CRC failure condition can be detected by reading the Global Interrupt Status Register at address 21Fh. If the nEEP_CRC bit is low, then the device's serial port is now in the failed state.

  - if the device is also programmed to load its registers from the internal One-Time Programmable memory, those register settings will be correctly loaded and used.

- Work-Around: by reading the nEEP_CRC bit, this condition can be detected. Once detected, the user may attempt to retry the EEPROM load operation by asserting then releasing the nRST input pin. If the retry attempt continues to fail, then no further recovery is possible. Note that a persistent EEPROM CRC failure indicates a corrupted configuration is present and the device could not be correctly configured anyway.

- Fix Plan: None

Errata # 2: GPIOs Can't Use Input Mode if V_{CCO} = 1.8V

- Errata: When the V_{CCO} pin adjacent to a GPIO pin is set to 1.8V and the core V_{CC} of the chip is at 3.3V, the GPIO pin will not behave as an input, either a General-Purpose Input or an Output Enable. Mappings are according to the following relationships:

GPIO0 / V_{CCO3}
GPIO1 / V_{CCO3}
GPIO2 / V_{CCO4}
GPIO3 / V_{CCO7}

- Work-Around: Ensure that voltage used on V_{CCO} pins is no less than V_{CC} - 1.6V.

- Fix Plan: None

Revision History

Revision Date	Description of Change
January 17, 2019	• Corrected the I^2C read sequence diagrams in Figure 3 and Figure 4 to match I^2C specification and device actual performance. Note: Only the drawings were incorrect – the part's behavior did not change and continues to meet the I^2C specification. • Added a Marking Diagram
January 28, 2016	Per PCN# W1512-01, Effective Date 03/18/2016 - changed Part/Order Number from 8T49N281B-dddNLGI to 8T49N281C-dddNLGI, and Marking from IDT8T49N281B-dddNLGI to IDT8T49N281C-dddNLGI. Updated Datasheet header/footer.
September 30, 2015	Updated Pin Descriptions for pins 3, 4, 52, 53. Output Phase Control on Switchover - added sentence to second and third paragraphs. Added notes to Table 4. AC Characteristics Table - updated Note 5. Updated Power Domains figure.
July 8, 2015	Device Start-up & Reset Behavior - added second paragraph.
May 4, 2015	Thermal Resistance Table - corrected table numbering from15 and auto-numbered rest of tables. Deleted prefix/suffix from part number through-out the datasheet.
April 24, 2015	AC Characteristics Table - added missing minimum Output Frequency spec for Q2, Q3 (LVPECL, LVDS) and LVCMOS. Termination for 3.3V LVPECL Outputs - updated Figure 10A. Crystal Recommendation - included additional crystal recommendation.
July 17, 2014	DSM_INT[8:0] field: added text "Do not set higher than FFh. This implies that for crystal frequencies lower then 16MHz, the doubler circuit must be enabled."
May 30, 2014	Bypath Path Section, 1st paragraph; added to last sentence "and the CLK1 Input reference will be presented to the Q5 output dividers". Input Clock Section, 8th paragraph; replaced last sentence with "It is recommended that all input references be given different priority settings in the Clock Input Priority control register." Output Phase Alignment, No. 3; Replaced text. LVCMOS Operation; replaced last sentence. Replaced "Femto NG" with "FemtoClock NG" (4 places). UFTADD[6:2]; replaced description. UFTADD[1]: changed 1st sentence to "I^2C Base Address bit 1. This bit is fixed as 0." UFTADD[0]; replaced description. Replaced XTAL_IN and XTAL_OUT with OSCI and OSCO respectively. Replaced Package Outline. Ordering Information; added pin orientation information. Added Table 19.

Revision Date	Description of Change
April 30, 2014	Added NOTE 1 to C_{IN}. General-Purpose I/Os & Interrupts section; added last paragraph. I^2C Mode Operation, first paragraph; replaced “using the address defined in the Status Control register” with “using the address defined in the Serial Interface Control register (0006h)”. I^2C Master Mode, 3rd bullet; replaced '0xE0' with 'E0h'. I^2C Master Mode, 4th bullet; replaced '0x05' with '05h'. I^2C Boot-up Initialization Mode, second paragraph; replaced “The BOOTFAIL bit in the Status Control register will also be set in this event.” with “The BOOTFAIL bit (021Eh) in the Global Interrupt Status register will also be set in this event”. Description; replaced '0xE0' with 'E0h'. EEPROM Offset (Hex) column; deleted ‘0x’ of 0x## (15 instances). Table Header; deleted ‘(Binary)’ from ‘Default Value”. Replaced values formatting for Default Value column. Description; replaced '0x0219' with '0219h'. Outputs, V_O (GPIO, SDATA, SCLK, nINT); changed GPIO to GPIO[3;0]. Added Note; NOTE: V_{CCOX} denotes V_{CCO0}, V_{CCO1}, V_{CCO2}, V_{CCO3}, V_{CCO4}, V_{CCO5}, V_{CCO6}, V_{CCO7}. Table Header; Changed V_{CCOX} to V_{CC}. ERRATA; 1st bullet/sub 2; replaced '0x21F' with '21Fh'.

Package Outline Drawing

PSC-4110-02
NLG56P2
56-VFQFPN 8.0 x 8.0 x 0.9 mm Body, 0.5mm Pitch
Rev.02, Date Created: Mar 12, 2025

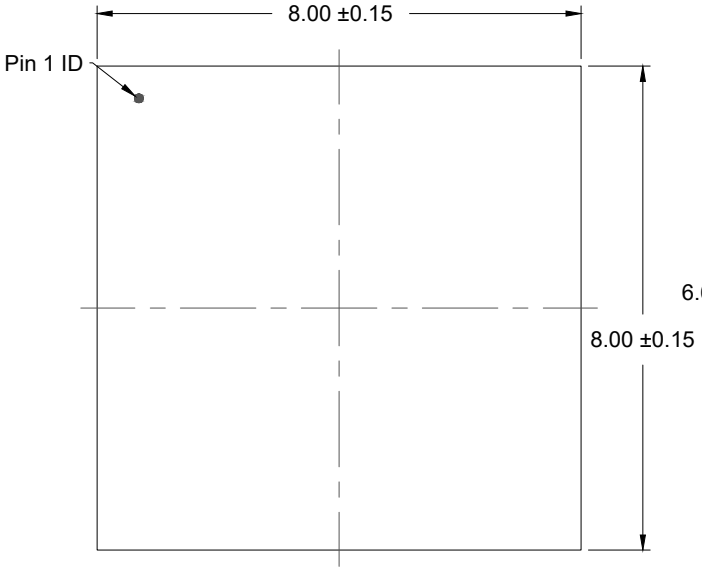

TOP VIEW

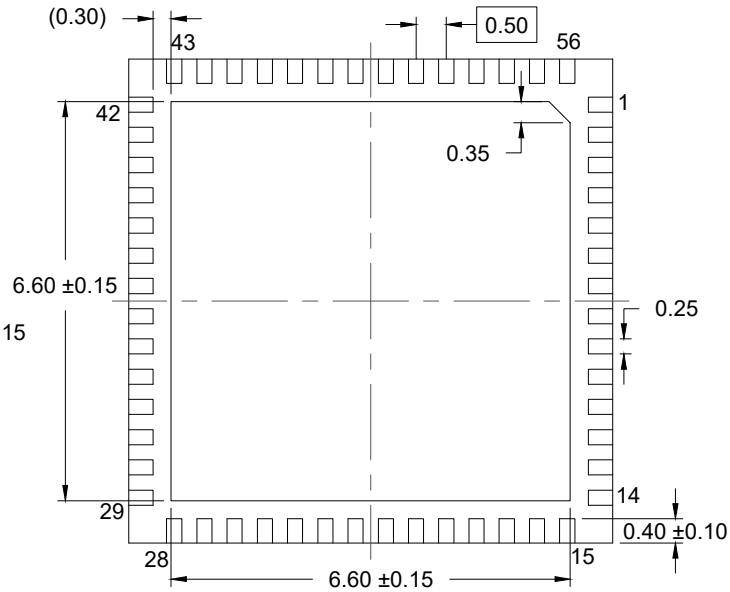

BOTTOM VIEW

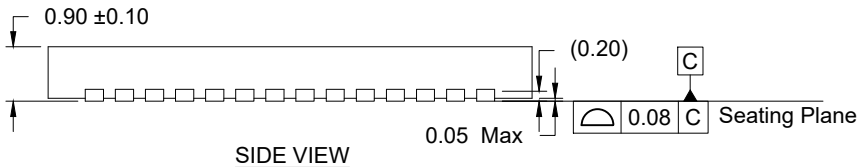

SIDE VIEW

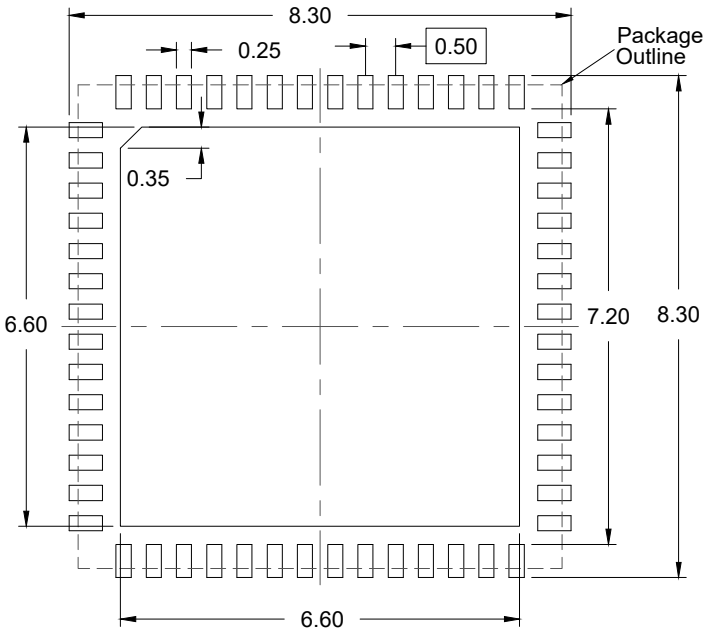

RECOMMENDED LAND PATTERN
(PCB Top View, NSMD Design)

NOTES:

1. JEDEC compatible.
2. All dimensions are in mm and angles are in degrees.
3. Use ±0.05 mm for the non-toleranced dimensions.
4. Numbers in ( ) are for references only.

© Renesas Electronics Corporation

IMPORTANT NOTICE AND DISCLAIMER

RENESAS ELECTRONICS CORPORATION AND ITS SUBSIDIARIES (“RENESAS”) PROVIDES TECHNICAL SPECIFICATIONS AND RELIABILITY DATA (INCLUDING DATASHEETS), DESIGN RESOURCES (INCLUDING REFERENCE DESIGNS), APPLICATION OR OTHER DESIGN ADVICE, WEB TOOLS, SAFETY INFORMATION, AND OTHER RESOURCES “AS IS” AND WITH ALL FAULTS, AND DISCLAIMS ALL WARRANTIES, EXPRESS OR IMPLIED, INCLUDING, WITHOUT LIMITATION, ANY IMPLIED WARRANTIES OF MERCHANTABILITY, FITNESS FOR A PARTICULAR PURPOSE, OR NON-INFRINGEMENT OF THIRD-PARTY INTELLECTUAL PROPERTY RIGHTS.

These resources are intended for developers who are designing with Renesas products. You are solely responsible for (1) selecting the appropriate products for your application, (2) designing, validating, and testing your application, and (3) ensuring your application meets applicable standards, and any other safety, security, or other requirements. These resources are subject to change without notice. Renesas grants you permission to use these resources only to develop an application that uses Renesas products. Other reproduction or use of these resources is strictly prohibited. No license is granted to any other Renesas intellectual property or to any third-party intellectual property. Renesas disclaims responsibility for, and you will fully indemnify Renesas and its representatives against, any claims, damages, costs, losses, or liabilities arising from your use of these resources. Renesas' products are provided only subject to Renesas' Terms and Conditions of Sale or other applicable terms agreed to in writing. No use of any Renesas resources expands or otherwise alters any applicable warranties or warranty disclaimers for these products.

(Disclaimer Rev.1.01)

Corporate Headquarters

TOYOSU FORESIA, 3-2-24 Toyosu,
Koto-ku, Tokyo 135-0061, Japan
www.renesas.com

Trademarks

Renesas and the Renesas logo are trademarks of Renesas Electronics Corporation. All trademarks and registered trademarks are the property of their respective owners.

Contact Information

For further information on a product, technology, the most up-to-date version of a document, or your nearest sales office, please visit www.renesas.com/contact-us/.

© 2026 Renesas Electronics Corporation. All rights reserved.