TRAY CONTAINER

UNIT : mm

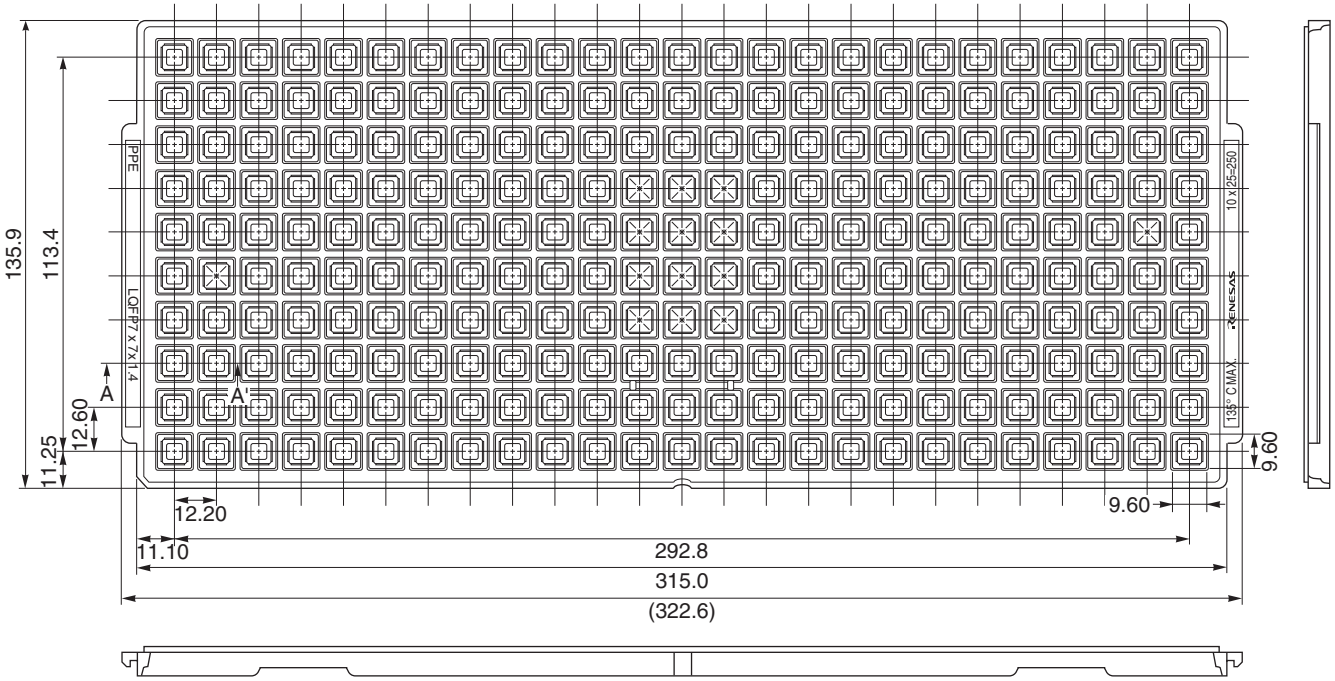

〈SECTION A-A'〉

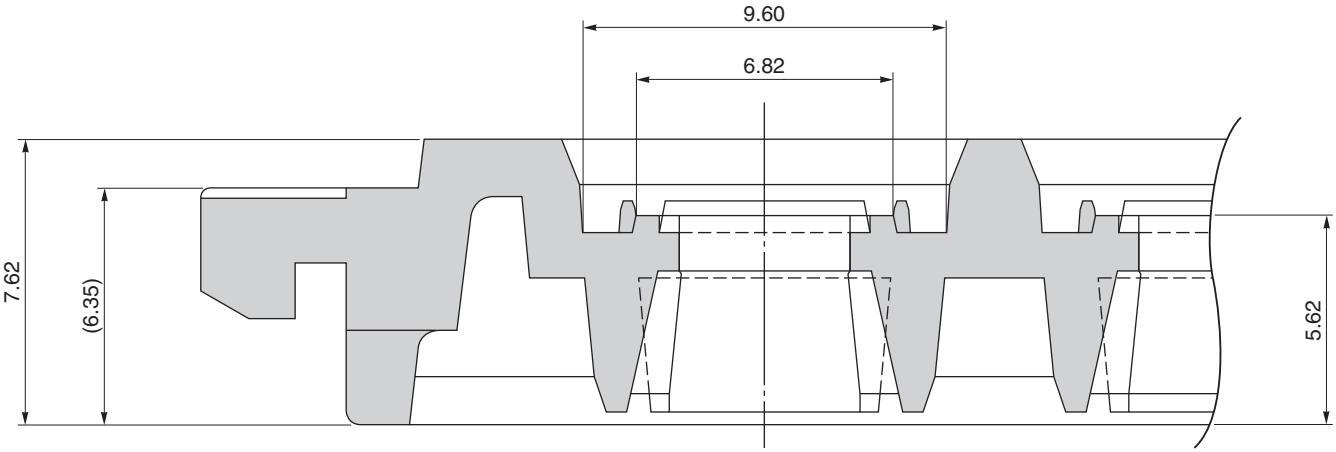

Applied Package	Quantity (pcs)
48-pin Plastic LQFP (Fine Pitch)(1.4mm thick)	250 MAX.
64-pin Plastic LQFP (Fine Pitch)(1.4mm thick)	

Tray	LQFP 7x7x1.4
Material	Carbon PPE
Heat Proof Temp.	135°C MAX.
Surface resistance	less than 1 x $10^{12}\Omega$ / □

The tolerance of tray's dimensions are based on JEDEC STANDARD.

© 2010 Renesas Electronics Corporation. All rights reserved.