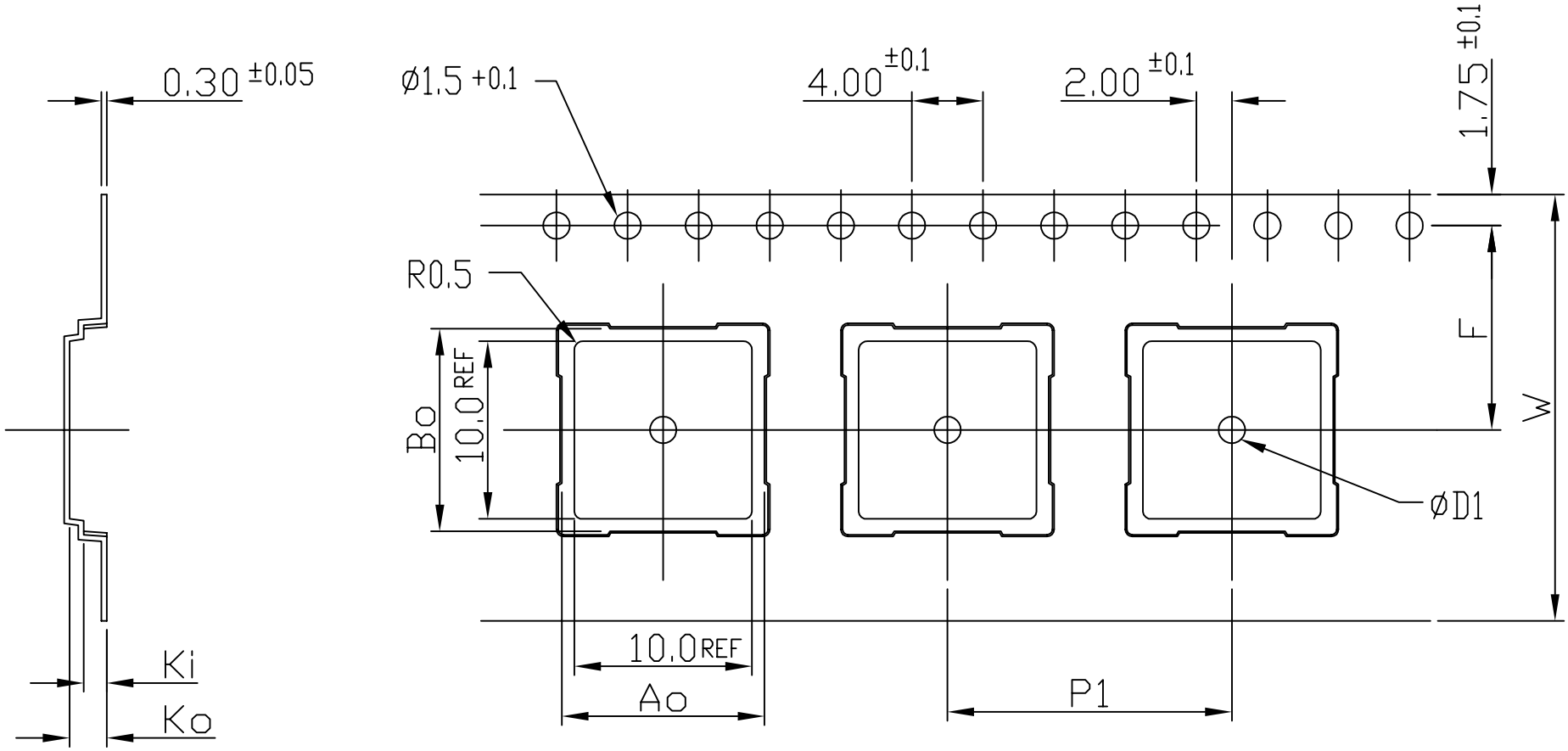

Ao ±0.1	Bo ±0.1	Ko ±0.1	Ki ±0.1	F ±0.1	P1 ±0.1	D1 +0.1	W ±0.3
11.4	11.4	2.1	1.4	11.5	16.0	1.5	24.0

TOLERANCES UNLESS OTHERWISE SPECIFIED
DECIMAL .X ± .25 .XX ± .13 .XXX ± .13
ANGLE ±.5°

APPROVALS	DATE
DRAWN	

IDT®
www.IDT.com

6024 Silver Creek Valley Road,
San Jose, CA 95138
PHONE: (408) 284-8200
FAX: (408) 284-3572

TITLE: AC/ACG 100 & BC/BCG 100 CARRIER TAPE

SCALE N/A

SIZE

STOCK NO. N/A

DRAWING NO. MSC-3421-A

REV 00

DO NOT SCALE DRAWING

SHEET 1 OF 1