RX23E-B Group

Example of 4-20mA transmitter using built-in D/A converter

Introduction

This document describes an example of output the results of measuring the thermocouple's temperature or voltage as a 4-20mA signal using the Renesas microcontroller RX23E-B.

The 4-20mA current transmitter is adopted in many sensing systems as part of the standard specifications. The circuit configuration and connections are simple, and the wiring and connections are minimal. This makes it advantageous for long-distance communication because it uses current-based communication.

The RX23E-B is equipped with an analog front-end (AFE) suitable for high-precision measurement with various sensors and a high-speed 24-bit delta-sigma (Δ-Σ) A/D converter (DSAD) with a maximum output of 125kSPS. It is also equipped with a 16-bit D/A converter (R16DA), and achieves a 4-20mA current output function by outputting voltage with high-resolution to the current output circuit.

Using the Renesas Solution Starter Kit for the RX23E-B and the sample program in this document, a board was placed in a thermostatic chamber at set temperatures of -25°C, 25°C, and 85°C. The output current for the current setting value was measured at each temperature with a multimeter. The results are shown in the following figure. The error is expressed as a percentage of the full scale (%FS), which is the difference between the output current and the set current divided by a 16mA span of 4mA to 20mA. From the measurement results, it was confirmed that the output current error was less than 0.1% FS.

The following table shows the current settling time when the output current is changed from 4mA to 20mA and the processing time from when the A/D value is obtained to when the output voltage at the DA0 pin changes. It is confirmed that the 95% settling time is dominated by the output stage filter circuit's response time of 1.3ms and that the MCU processing time of 20μs has almost no effect.

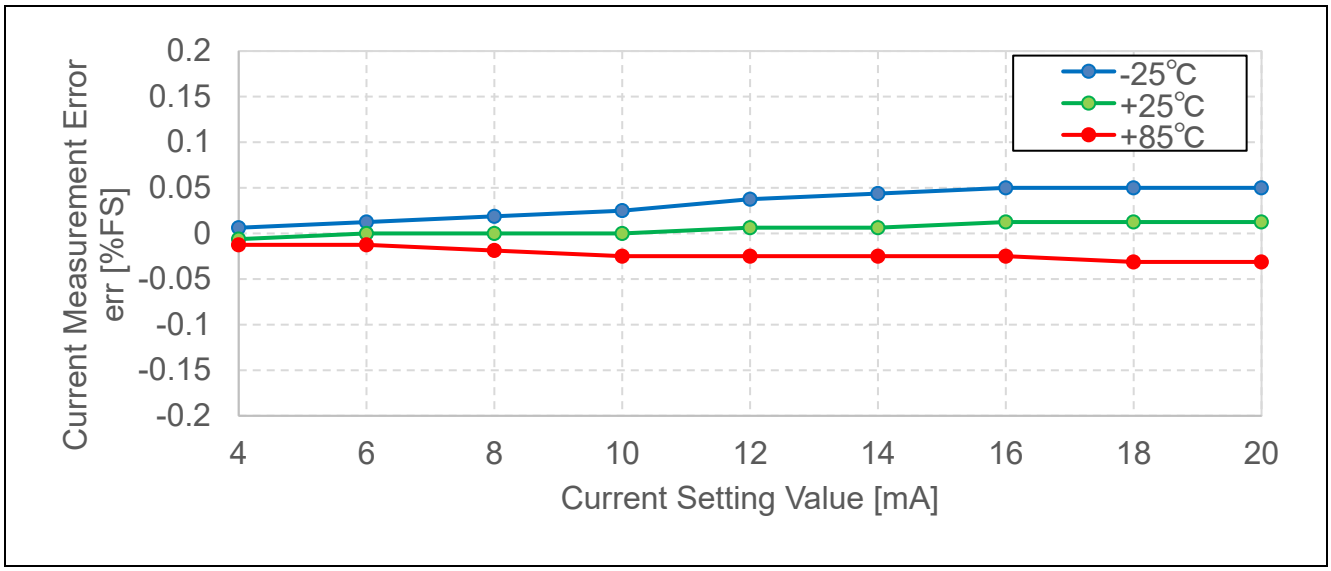

Figure Current Output Accuracy Evaluation Results

Table Settling time and response time

Item	Measurement
95% settling time	1.3ms
DA0 pin output response time	20μs

Device

RX23E-B (R5F523E6LDFP)

Contents

1. Overview 4

2. Environment for Operation Confirmation 7

3. Related Documents 7

4. 4-20m A Communication 8
4.1 Hardware Configuration 8
4.1.1 4-20m A Transmitter 8
4.1.2 Temperature Measurement Circuit 9
4.1.3 Voltage Measurement Circuit 9
4.2 Temperature Measurement 10
4.2.1 Thermocouple 10
4.2.2 Resistance Temperature Detector (RTD) 12
4.2.3 A/D Conversion of the Thermocouple and the RTD 13
4.2.4 Temperature Calculation 14
4.3 Voltage Measurement 16
4.3.1 A/D Conversion of Input Voltage 16
4.3.2 Voltage Calculation 16
4.4 DSAD Calibration 17
4.5 Current Output 18
4.5.1 Current Output Procedure 18
4.5.2 Current Output Calibration 19

5. Sample Program 20
5.1 Overview 20
5.2 MCU Functions and Settings 23
5.2.1 Temperature and Voltage Measurement 25
5.2.2 Communication 27
5.2.3 4-20mA Current Output 28
5.2.4 LEDs and Switches 28
5.2.5 E2 Data Flash 29
5.3 Program Configuration 30
5.3.1 Source File Configuration 30
5.3.2 Macro Definitions 31
5.3.3 Structures and Unions 34
5.3.4 Functions 37

6. Importing a Project 46
6.1 Importing a Project into e2 studio 46
6.2 Importing a Project into CS+ 47

7. Measurement Results with Sample Program 48
7.1 Memory Usage and Number of Execution Cycles 48
7.1.1 Build Conditions 48
7.1.2 Memory Usage 48
7.1.3 Number of Execution Cycles and Processing Time 49
7.2 Current Output Accuracy Evaluation 50
7.2.1 Configuration of Current Output Accuracy Evaluation 50
7.2.2 Current Output Accuracy Evaluation Results 51
7.3 Current Output Evaluation during Temperature Measurement 52
7.3.1 Configuration of Current Output Evaluation during Temperature Measurement 52
7.3.2 Results of Current Output Evaluation during Temperature Measurement 53
7.4 Response Characteristics Evaluation 54
7.4.1 Configuration of Response Characteristics Evaluation 54
7.4.2 Response Characteristics Evaluation Results 55

Revision History 56

1. Overview

This document describes an example where the Renesas microcontroller RX23E-B is used to output the results of measuring the temperature or voltage from each A/D value obtained with a Δ-Σ A/D converter (DSAD) as a 4-20mA signal using a 16-bit D/A converter (R16DA). The sample program runs on the Renesas Solution Starter Kit for the RX23E-B board (RSSKRX23E-B), and the operating conditions are set, and the measured temperature or voltage is displayed on the CH0 and the 4-20mA output current settings are displayed on the CH1 during measurement on the Application tab of the QE for AFE.

The system used in this example is shown in Figure 1-1, and the operation settings that can be adjusted are shown in Figure 1-2, Table 1-1, and Table 1-3.

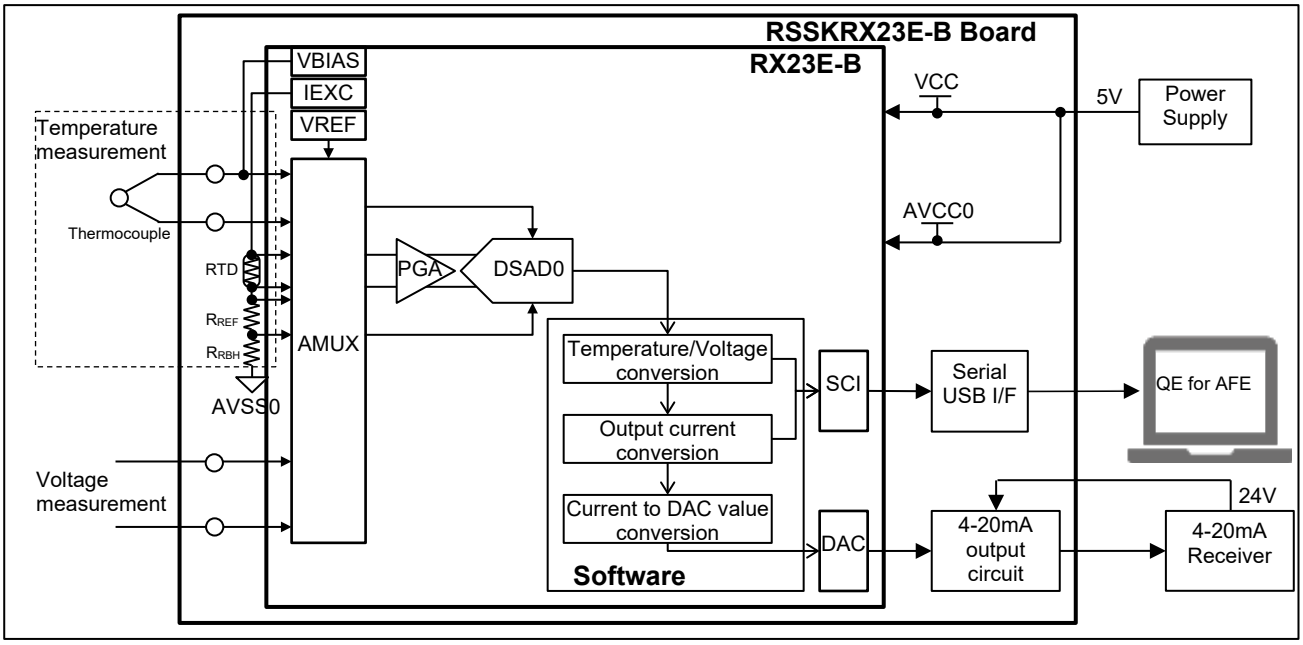

Figure 1-1 Example of the 4-20mA Communication System

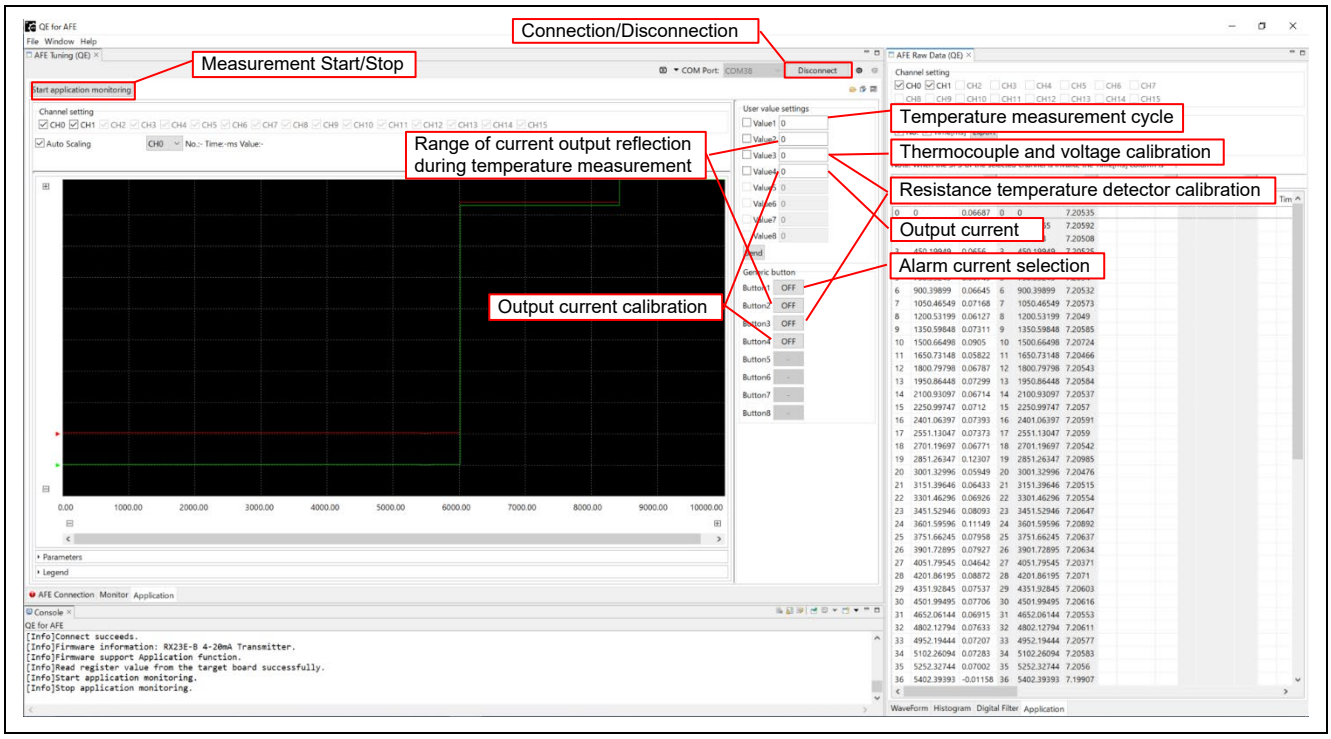

Figure 1-2 Screenshot of the Application Tab in the QE for AFE

Table 1-1 Operation Settings (1/2)

Bold: Default value

Item		Operations	Remarks
Measurement target selection		RSSKRX23E-B: SW3-1 OFF: Temperature measurement ON: Voltage measurement	To be reflected at the start of A/D conversion
Parameter initialization		RSSKRX23E-B: SW2 Press until LED0 is ON at reset	
Start/Stop of measurement		QE for AFE	LED0 is OFF during A/D conversion.
Temperature measurement (SW3-1: OFF)	Temperature measurement cycle	QE for AFE: Value1 300, **150** [ms]	Valid only during standby (when LED0 is ON)
	Range of current output reflection during temperature measurement	QE for AFE: Button2, Value2 Press Button2. After LED3 turns ON, set Value2 to specify the lower limit temperature. While LED3 is blinking, set Value2 to specify the upper limit temperature.	Valid only during standby (when LED0 is ON) **Default: -40**°C **to 160**°C
	Thermocouple voltage calibration	RSSKRX23E-B SW3-1: OFF QE for AFE: Value3 Specify input voltage 1 in Value3. While LED2 is blinking, specify input voltage 2 in Value3.	Valid only during standby (when LED0 is ON) LED0 is OFF during A/D conversion. When an abnormal termination occurs, LED2 will blink five times.
	Resistance temperature detector resistance calibration	RSSKRX23E-B SW3-1: OFF QE for AFE: Button3, Value3 Press Button3. After LED2 turns ON, specify input resistance 1 in Value3. While LED2 is blinking, to specify input resistance 2 in Value3.	Valid only during standby (when LED0 is ON) LED0 and LED2 are OFF during A/D conversion. When an abnormal termination occurs, LED2 will blink five times.
Voltage measurement (SW3-1: ON)	Voltage calibration	RSSKRX23E-B SW3-1: ON QE for AFE: Value3 Specify input voltage 1 in Value3. While LED2 is blinking, to specify input voltage 2 in Value3.	Valid only during standby (when LED0 is ON) LED0 is OFF during A/D conversion. When an abnormal termination occurs, LED2 will blink five times.

Table 1-2 Operation Settings (2/2)

Bold: Default value

Item		Operations	Remarks
Current output	Alarm current selection	QE for AFE: Button1 Use buttons to select the alarm current. 3.2, **22.8**, 24.0 [mA]	
	Output current specification	QE for AFE: Value4	Valid only during standby (when LED0 is ON) When an abnormal termination occurs, LED3 will blink five times.
	Output current calibration	QE for AFE: Button4, Value4 Press Button4. After LED3 turns ON, set Value4 to 20mA to specify the current measurement value and then change Value4 to 4mA to specify the current measurement value.	Valid only during standby (when LED0 is ON) When an abnormal termination occurs, LED3 will blink five times.
	Output current fault	–	DAC output 0 during measurement or output current calculation error when output current is specified, LED0 blinks during error

Table 1-3 Changeable Items in the Register Settings

Item		Settings	Remarks
Temperature measurement Note1	Thermocouple input PGA gain	PGA gain setting for CH0	Invalid during calibration
	Resistance temperature detector input PGA gain	PGA gain setting for CH1	
Voltage measurement	PGA	Set each item for CH2	Invalid during calibration Initial value at reset start
	OSR1 Note2		
	OSR2		

Notes: 1. The settings for the MRm, CRm, OSRm, and SGCRm registers for temperature measurement are configured to the hold values of the program (Table 5-8) at the start of measurement. If any changes are made that are not specifically listed in this table, the system will not function correctly or operate as intended.

2. The OSR1 setting value for voltage measurement should be 160 or higher. Setting it to a value below 160 will result in communication errors in the QE for AFE.

Parameters listed in Table 1-4 maintain their changes using the E2 data flash.

Table 1-4 Retention Parameters

Item	No. of items or sets stored	Details
Temperature measurement cycle selection	1	
Temperature measurement DSAD0 parameter	2 sets	Every temperature measurement cycle
Range of current output reflection during temperature measurement	1 set	
Average count during DSAD0 calibration	1	
DAC output setting value conversion coefficient	1 set	
4-20mA alarm output selection	1	

Note: For details, refer to the description of the structure st_e2df_data_t in Table 5-23.

2. Environment for Operation Confirmation

Table 2-1 Environment for Operation Confirmation

Item	Description
Board	RSSKRX23E-B board (RTK0ES1001C00001BJ)
MCU	RX23E-B (R5F523E6LDFP) Power voltage (VCC, AVCC0): 5V Operating frequency (ICLK): 32MHz Peripheral operating frequency (PCLKB, PCLKC):32 MHz DSAD0 operating frequency (f_{OP}): 16MHz DSAD0 modulator clock frequency (f_{MOD}): 4MHz
Thermocouple	XE-3505-001 (Labfacility Limited)
Resistance temperature detector	PTS060301B100RP100 (Mounted on the board)
Thermocouple calibrator	CA320 (Yokogawa Test & Measurement Corporation)
Host	Renesas QE for AFE V2.1.1
IDE	Renesas e2 Studio Version 2023-04 Renesas RX Smart Configurator V23.4.0
Tool Chain	Renesas CC-RX V3.05.00
Emulator	Renesas E2 emulator Lite

3. Related Documents

- R01UH0972 RX23E-B Group User's Manual: Hardware
- R12UZ0108 RSSKRX23E-B User's Manual
- R01AN6364 RX23E-B Group RSSKRX23E-B Board Control Program

4. 4-20m A Communication

4.1 Hardware Configuration

4.1.1 4-20m A Transmitter

The configuration of the 4-20mA transmitter using the RSSKRX23E-B board is shown in Figure 4-1. Table 4-1 shows the changes made to the parts of the RSSKRX23E-B to achieve the 4-20mA transmitter configuration. Table 4-2 lists the jumper settings.

In Figure 4-1, the relationship between the output voltage and the output current of the D/A converter can be expressed with the following formula:

$$I_{out} = \frac{R_{282}}{R_{283}R_{286}}\left\{\frac{1}{R_{276}+R_{277}}\left(R_{276}V_{DA0}+R_{277}V_{2.5VREF}\right)\right\}$$

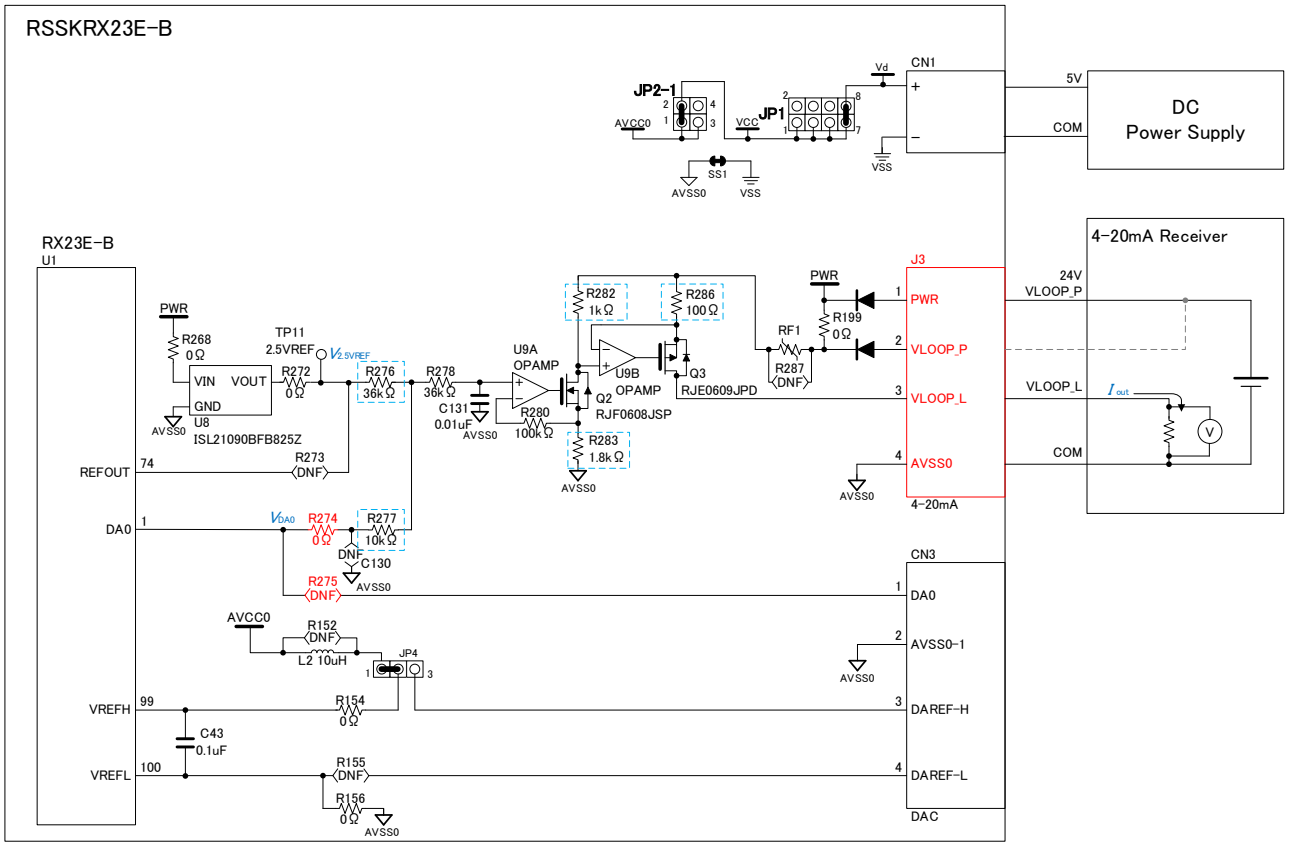

Figure 4-1 RSSKRX23E-B: 4-20mA Transmitter Configuration

Table 4-1 Changes Made to the RSSKRX23E-B Board for Use of the 4-20mA Transmitter

Circuit reference number	Before	After
R274	DNF	0Ω
R275	0Ω	DNF
J3	DNF	M20-9990445 from Harwin, Inc.

Table 4-2 Jumper Settings for the RSSKRX23E-B Board for Use of the 4-20mA Transmitter

Function	Symbol	Connection	Setting
Digital power selection (VCC)	JP1	7-8	Use Vd for VCC.
Analog power selection (AVCC0)	JP2	1-2 (JP2-1)	Use 5VCC for AVCC0.
R16DA reference power selection (VREFH)	JP4	1-2	Select AVCC0 for VREFH.

4.1.2 Temperature Measurement Circuit

Refer to the following sections of the “RSSKRX23E-B User's Manual”.

- 2.4.2 Thermocouple Measurement Circuit
- 2.4.3 Onboard RTD-based reference junction compensation circuit

4.1.3 Voltage Measurement Circuit

The voltage measurement circuit is shown in Figure 4-2.

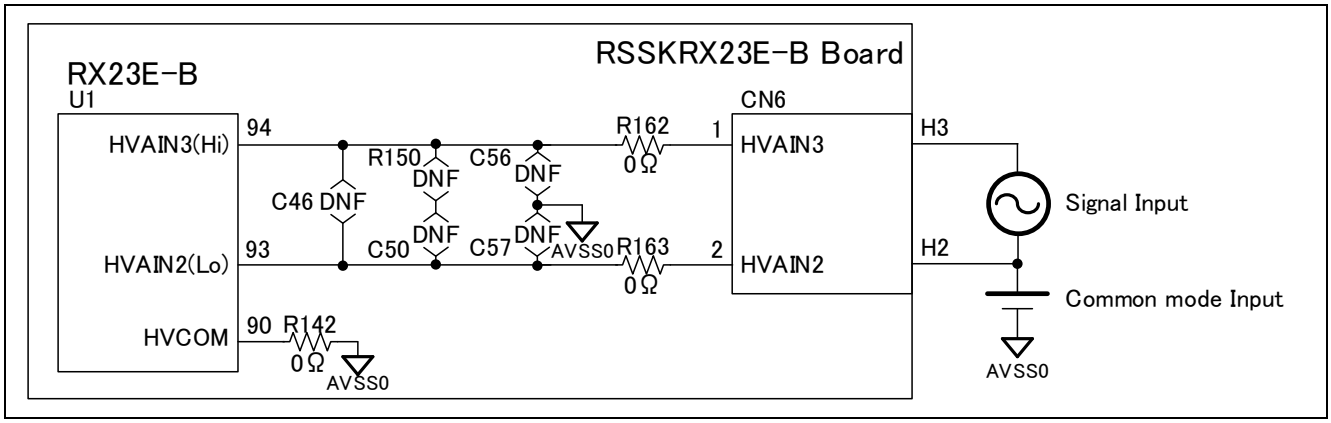

Figure 4-2 RSSKRX23E-B: Voltage Measurement Circuit

4.2 Temperature Measurement

Temperature measurement is performed with a thermocouple, and the temperature measured with the resistance temperature detector (RTD) mounted on the RSSKRX23E-B board is used as the reference junction temperature.

Figure 4-3 shows the procedure for calculating the temperature measured with the thermocouple from the obtained A/D conversion values of the thermocouple and the RTD. Note that the moving average number is set to 1 to disable the moving average.

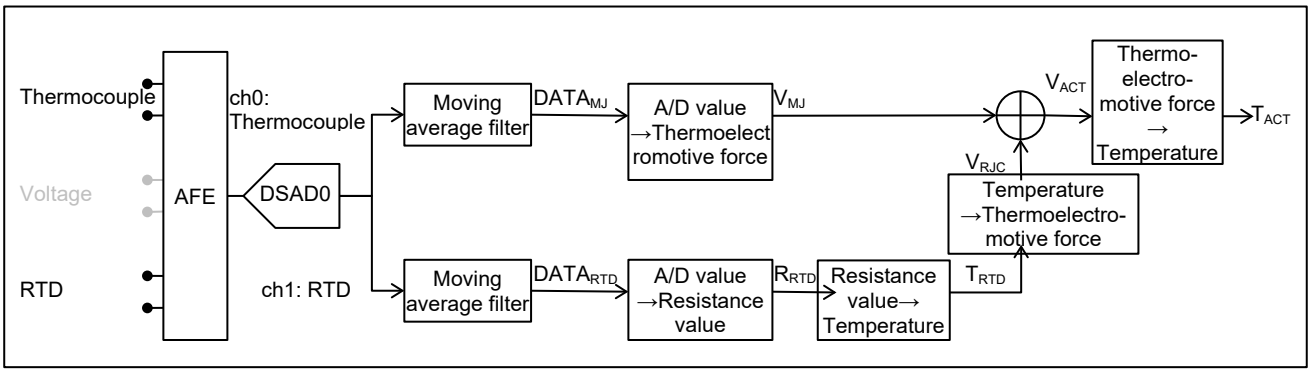

Figure 4-3 Method used to Calculate the Temperature

4.2.1 Thermocouple

Tabel 4-3 shows the thermocouple specifications used in this example, and Table 4-4 shows the thermocouple calibrator specifications.

Tabel 4-3 Excerpt of the XE-3505-001 Specifications

Item	Description
Type	K
Tolerance	IEC-584-2 Class 1
Temperature range	-75°C to +250°C
Output voltage range	-2,755μV to 10,153μV (junction reference Temperature: 0°C)

Table 4-4 Excerpt of the CA320 Specifications

Item		Description
Output Type Setting		K
Output Tolerance Note	-200.0°C ≦ t ＜ 0.0°C	0.7 + |t| x 0.4%
	0.0°C ≦ t ＜ +500.0°C	0.7
	+500.0°C ≦ t ≦+1372.0°C	0.7 + (t -500) x 0.03%
Compatibility Standard		IEC60584-1
Temperature Range		-200.0°C to +1372.0°C
Output voltage Range		-5,891μV to 54,886μV (-200.0°C ≦ t ≦+1372.0°C) (Junction reference temperature: 0°C)

Note: When using terminal B (banana terminal) and reference contact compensation by external RJ sensor (sold separately)

The characteristics of the output voltage of the thermocouple at different temperatures are shown in Figure 4-4.

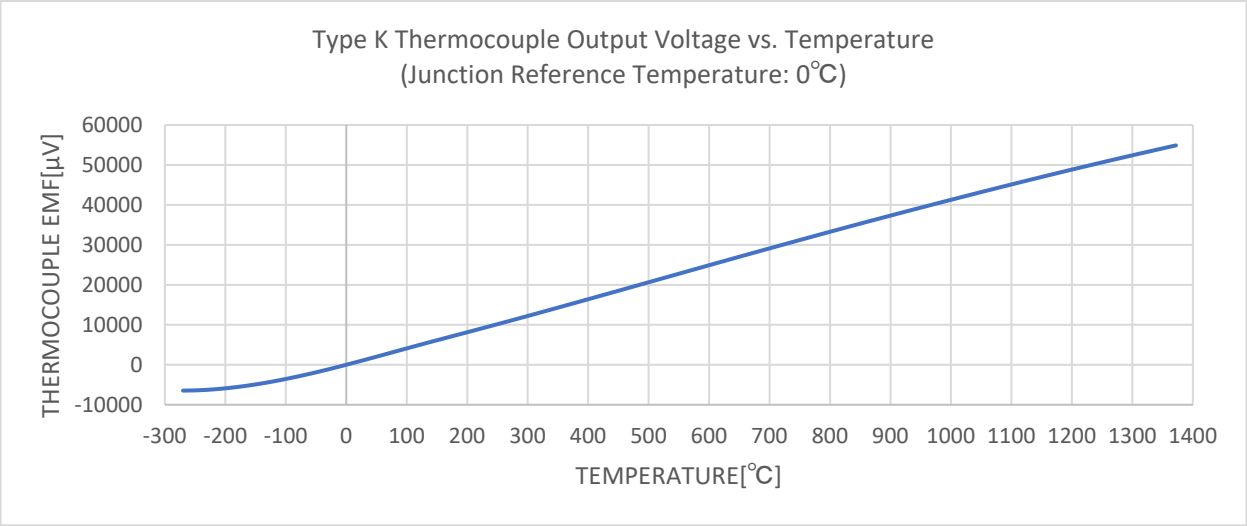

Figure 4-4 Temperature Characteristics of a Type K Thermocouple (from IEC 60584-1)

The thermocouple has a non-linear thermoelectromotive force in relation to temperature, so a table that defines the thermoelectromotive force in relation to the temperature is used to convert the temperature. This example refers to using the type K thermoelectromotive force reference table as defined by the IEC 60584-1 standard as well as using a thermoelectromotive force table with 1°C intervals for measuring temperatures from -270°C to 1372°C.

Since thermocouples do not stabilize their potential in the floating state, the AFE bias voltage output is enabled to stabilize the potential.

The conditions for measuring the thermocouple electromotive force in this example are listed in Table 4-5.

Table 4-5 Thermocouple Measurement Conditions

Item	Condition	Remarks
Bias voltage	2.5V	RX23E-B VBIAS is applied to the low side.
DSAD0 reference voltage V_{REF0}	2.5V	The internal VREF output is used.
PGA gain G_{PGA0}	x128	Thermoelectromotive force of 19531.25μV or less[Note]

Note: If the thermoelectromotive force exceeds 19531.25μV, the PGA gain must be reduced.

4.2.2 Resistance Temperature Detector (RTD)

In this example, the 4-wire RTD, PTS060301B100RP100 mounted on the RSSKRX23E-B board is used. An excerpt of the PTS060301B100RP100 specifications is given in Table 4-6, and the characteristics of the resistance value in relation to temperature are shown in Figure 4-5.

Table 4-6 Excerpt of the PTS060301B100RP100 Specifications

Item	Description
Tolerance Class	F0.3
Resistance values R0 at 0 °C	100Ω
Operating temperature range	-55°C to +155°C
Register value range (Board constraints)	84.271Ω (-40°C) to 132.803Ω (85°C)
Measurement current $I_{meas.}$ (DC)[Note]	0.1mA to 0.50mA

Note: Constant current when the self-heating effect is less than 0.1°C.

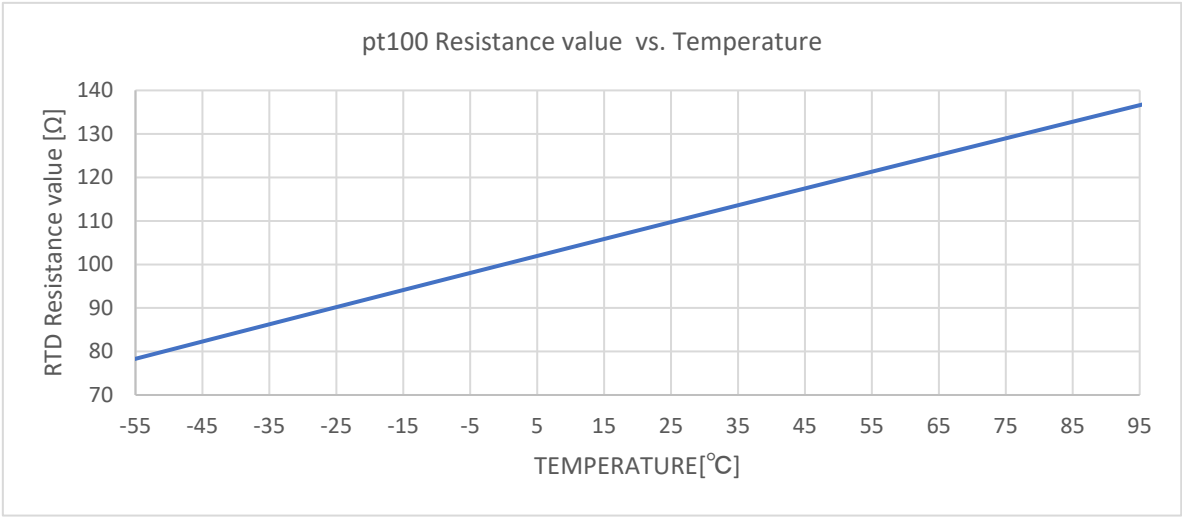

Figure 4-5 Pt100: Temperature vs. Resistance Value (from IEC 60751)

This example conducts ratiometric measurement. By applying a constant current to the series connection of the RTD and the reference resistance R_{REF}, and voltage of the RTD is A/D converted with the voltage across R_{REF} as reference voltage V_{REF1}.

The resistance value of the RTD is calculated from the A/D conversion value, and the resistance value is converted to the temperature. The resistance value of the RTD is non-linear in relation to temperature, so the resistance value is converted to a temperature by using a table that defines the resistance value in relation to the temperature. In this example, a table of resistance values in 1°C increments in a range of -50°C to 95°C is created from the formula used to calculate the reference resistance value of the Pt100 in IEC 60751.

The RTD measurement conditions in this example are listed in Table 4-7.

Table 4-7 RTD Measurement Conditions

Item	Condition	Remarks
Measurement temperature range	-50°C to 95°C	
Excitation current I_{EXC}	500μA	
PGA gain G_{PGA1}	x32	
Reference resistance value R_{REF}	5.1kΩ	
DSAD reference voltage V_{REF1}	2.55V	The voltage applied to R_{REF} is assumed to be the A/D conversion reference voltage. $V_{REF1} = I_{EXC} \times R_{REF} = 2.55V$ A reference buffer is used because R_{REF} impedance is high.

4.2.3 A/D Conversion of the Thermocouple and the RTD

The thermocouple is assigned to CH0 and the RTD is assigned to CH1. Each voltage is obtained through A/D conversion by using a DSAD0 channel scan. In this example, the measurement cycles of 150ms and 300ms are preset. Figure 4-6 shows the A/D conversion sequence for the thermocouple and the RTD, and Table 4-8 lists the A/D conversion conditions for a measurement cycle of 150ms. Digital filter gain is corrected to 1 by Sinc Filter gain correction.

Each A/D conversion value is obtained by detecting the A/D conversion end interrupt flag ADI0 of DSAD0. If the channel of the obtained A/D value is CH1, this indicates that a pair of A/D values has been obtained, and the processing to calculate the temperature is performed.

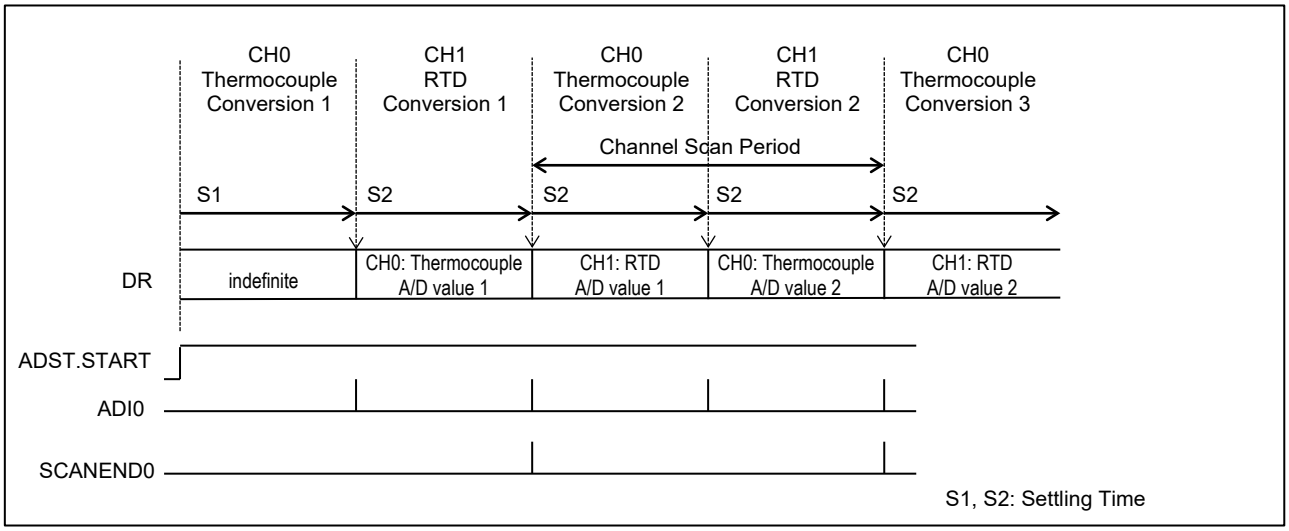

Figure 4-6 Sequence of A/D Conversion for Measuring Temperatures

Table 4-8 DSAD0 Conversion Conditions of Temperature Measurement (150ms Cycle)

Modulator clock frequency F_{MOD}: 4MHz

Item			Setting		Remarks
			CH0: Thermocouple	**CH1: RTD**	
Setting	Input pin	+	AIN11	AIN5	
		-	AIN10	AIN4	
	PGA gain		x128	x32	G_{PGAm}, m=0, 1
	Reference voltage		REFOUT/AVSS0	REF0P/REF0N	V_{REF0} = 5V
	OSR	OSR1	256		
		OSR2	292		
		Total OSR	74752		= OSR1 x OSR2
	Digital filter	Type	SINC4 + SINC4		
		Gain correction	1.181567267		$1/G_{DFm}$, m=0, 1
Channel scan cycle			150.0105ms		= S2 x 2
	Settling Time 1: S1		75.00552ms		
	Settling Time 2: S2		75.00525ms		
Temperature measurement rate			6.666200033SPS		

Note: For details about settling time, refer to "36.3.7.2 Settling Time in the RX23E-B Group User's Manual: Hardware".

4.2.4 Temperature Calculation

The measurement temperature is calculated using the procedure shown in Figure 4-3 with reference junction compensation from each A/D conversion value of the thermocouple and the RTD and the noise is reduced with the moving average filter.

(1) Thermocouple reference junction temperature measurement with the RTD

(a) Calculation of the RTD resistance value

The resistance value R_{RTD} of the RTD is determined from the A/D conversion value $DATA_{RTD}$ of the RTD. Assuming that the set gain of the PGA is G_{PGA1}, the resolution of the DSAD0 is 24 bits, and the reference resistance value is R_{REF}, R_{RTD} can be calculated with the following formula:

$$R_{RTD} = \frac{2 \cdot R_{REF}}{2^{24} \cdot G_{PGA1}} \cdot DATA_{RTD} = \frac{R_{REF}}{2^{23} \cdot G_{PGA1}} \cdot DATA_{RTD}$$

(b) Calculation of the thermocouple's reference junction temperature

The (temperatures, resistance values) before and after the resistance value of the RTD R_{RTD} are obtained from the Temperature vs. Resistance table for the RTD. From the obtained results, the temperature T_{RTD} equivalent to the resistance value R_{RTD} is determined with linear interpolation. Assuming that the resistance value is R and the temperature is T and since the ratios of the distances from point a to measurement point c (T_{RTD}, R_{RTD}) on the T-axis and the R-axis to the distances between two points a (T_1,R_1) and b (T_2,R_2) on the T-axis and the R-axis in the obtained table are the same, the relationship can be expressed with the following formula:

$$\frac{R_{RTD} - R_1}{R_2 - R_1} = \frac{T_{RTD} - T_1}{T_2 - T_1} = \alpha$$

This formula is rearranged so that the temperature T_{RTD} for the resistance value R_{RTD} can be calculated with the following formula:

$$T_{RTD} = T_1 + \alpha(T_2 - T_1) = T_1 + \frac{R_{RTD} - R_1}{R_2 - R_1} \cdot (T_2 - T_1)$$

(2) Temperature calculation with thermocouple measurement

(a) Calculation of the thermocouple's thermoelectromotive force of the reference junction

By assuming that the temperature T_{RTD} measured with the RTD is the reference junction temperature of the thermocouple, the (temperatures, thermoelectromotive forces) before and after the temperature T_{RTD} are obtained from the Temperature vs. Thermoelectromotive force table, and the thermoelectromotive force V_{RJC} equivalent to T_{RTD} is determined with linear interpolation. Assuming that the temperature is T and the thermoelectromotive force is V, the thermoelectromotive force V_{RJC} for T_{RTD} on the line segment passing through two points (T_1,V_1) and (T_2,V_2) in the obtained table can be calculated with the following formula in accordance with the linear interpolation formula:

$$V_{RJC} = V_1 + \frac{T_{RTD} - T_1}{T_2 - T_1} \cdot (V_2 - V_1)$$

(b) Calculation of the thermocouple's thermoelectromotive force of the temperature measuring junction

The thermoelectromotive force V_{MJ} of the temperature measuring junction is determined from the A/D conversion value $DATA_{TC}$ of the thermocouple. Assuming that the set gain of the PGA is G_{PGA0}, the full scale of the A/D conversion value is 2^{24}, and the reference voltage of the DSAD0 is V_{REF0}, the thermoelectromotive force of the temperature measuring junction (V_{MJ}) can be calculated with the following formula:

$$V_{MJ} = \frac{2 \cdot V_{REF0}}{2^{24} \cdot G_{PGA0}} \cdot DATA_{MJ} = \frac{V_{REF0}}{2^{23} \cdot G_{PGA0}} \cdot DATA_{MJ}$$

(c) Calculation of the thermocouple thermoelectromotive force for a reference junction temperature of 0°C
The reference junction thermoelectromotive force V_{RJC} is added to the thermoelectromotive force of the temperature measuring junction V_{MJ} to calculate the thermocouple's thermoelectromotive force V_{ACT} for the zero junction.

$$V_{ACT} = V_{MJ} + V_{RJC}$$

(d) Temperature conversion
The values (temperatures and electromotive forces) before and after the thermoelectromotive force V_{ACT} are obtained from the temperature vs. thermoelectromotive force table. From the obtained results, the temperature T_{ACT} equivalent to V_{ACT} is determined with linear interpolation.
Assuming that the temperature is T and the thermoelectromotive force is V, the temperature T_{ACT} for the thermoelectromotive force V_{ACT} on the line segment passing through two points (T_1,V_1) and (T_2,V_2) in the obtained table can be calculated with the following formula in accordance with the linear interpolation formula:

$$T_{ACT} = T_1 + \frac{V_{ACT} - V_1}{V_2 - V_1} \cdot (T_2 - T_1)$$

4.3 Voltage Measurement

The procedure for voltage calculation is shown in Figure 4-7. Note that the moving average number is set to 1 so the moving average is invalid.

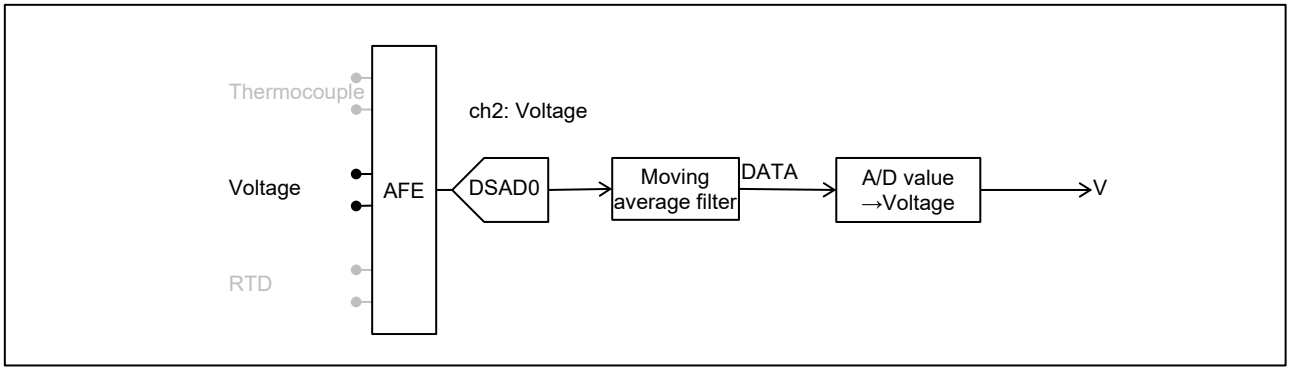

Figure 4-7 Method Used to Calculate Voltage

4.3.1 A/D Conversion of Input Voltage

The A/D conversion of the pin input voltage is performed using the DSAD0. In this example, the A/D conversion of the input voltage is performed by setting CH2 of the DSAD0. A/D conversion conditions are shown in Table 4-9. Digital filter gain is corrected to 1 by Sinc Filter gain correction.

Table 4-9 DSAD0 Conversion Conditions for Voltage Measurement

Modulator clock frequency: F_{MOD} = 4 MHz

Item				CH2	Remarks
Setting	Input pin		+	HVAIN3	
			-	HVAIN2	
	PGA gain			x1	G_{PGA2} = 0.1 because of the use of HVAIN
	Reference voltage			REFOUT/AVSS0	V_{REF2} = 2.5V
	OSR	OSR1		256	
		OSR2		16	
		Overall OSR		4096	= OSR1 x OSR2
	Digital filter	Type		SINC4 + SINC4	
		Gain correction		1.0	$1/G_{DF2}$
Data rate				976.5625SPS	= F_{MOD} / (OSR1 x OSR2)

4.3.2 Voltage Calculation

The pin input voltage is calculated from the A/D conversion results.

Assuming that the set gain of the PGA is G_{PGA2}, the full scale of the A/D conversion value is 2^{24}, and the DSAD0 reference voltage is V_{REF2}, the pin input voltage (V) for the A/D conversion result (DATA) is calculated with the following formula:

$$V = \frac{2 \cdot V_{REF2}}{2^{24} \cdot G_{PGA2}} \cdot DATA$$

4.4 DSAD Calibration

A/D conversion accuracy can be increased with offset/gain correction of the DSAD. In this example, the offset and gain correction values are calculated from the results of A/D conversion for two types of expected values in accordance with the method in "36.4.6 Calculation of Calibration Coefficients for Offset Error and Gain Error in the RX23E-B Group User's Manual: Hardware" and are set in DSAD0. The specifications of the expected values for each calibration target are given in Table 4-10.

Table 4-10 Specifications of Expected Values for Calibration Targets

Target	Expected value	A/D expected value	Remarks
Thermocouple input	Voltage V_{IN} [V]	$DATA_{EXP} = V_{IN} \cdot G_{PGA} \cdot (2^{23}/V_{REF})$	Use a thermocouple calibrator.
Resistance temperature detector input	Resistance value R [Ω]	$DATA_{EXP} = R \cdot G_{PGA} \cdot (2^{23}/R_{REF})$	Use an RTD calibrator.
Voltage input	Voltage V_{IN} [V]	$DATA_{EXP} = V_{IN} \cdot G_{PGA} \cdot (2^{23}/V_{REF})$	

Note: G_{PGA}: PGA gain. In the case of HVAIN pin input, 0.1 x PGA gain
V_{REF}: DSAD0 reference voltage (= 2.5V)
R_{REF}: Reference resistance value (= 5.1kΩ)

The calibration procedure is as described below.

(1) Offset correction

(a) Start setting

Set each of the offset correction and gain correction registers for channel n as a calibration target as follows:

OFCRn = 0x00000000
GCRn = 0x00400000

(b) Obtaining the A/D value of calibration input 1

Apply the input signal REF_1 for calibration and obtain A/D conversion value $DATA_1$.
Here, to improve calibration accuracy, take the average of a predetermined number of samples.

(c) Offset calculation and setting

Determine the A/D expected value $DATA_{EXP1}$ for REF_1 with the formula in Table 4-10, calculate the offset from the obtained $DATA_1$ with the following formula, and set it in OFCRn.

$$OFCR_n = DATA_1 - DATA_{EXP1}$$

(2) Gain correction

(a) Obtaining the A/D value of calibration input 2

Apply the input signal REF_2 for calibration and obtain A/D conversion value $DATA_2$.
As with offset correction, to improve calibration accuracy, take the average of a predetermined number of samples.

(b) Gain correction value calculation and setting

Determine the A/D expected value $DATA_{EXP2}$ for REF_2 with the formula in Table 4-10, calculate the gain correction value from the obtained A/D value $DATA_2$ with the following formula, and set it in GCRn.

$$GCR_n = 2^{22} \cdot \frac{DATA_{EXP2}}{DATA_2}$$

4.5 Current Output

In this example, a predetermined measurement range of 4mA to 20mA is assigned to each measurement result, as indicated in Table 4-11, and output.

Table 4-11 4-20mA Output Specifications

Item		Setting			Description
		Temperature measurement	Voltage measurement		
Output current range $I_{LIMITmin}$ to $I_{LIMITmax}$		3.8 to 20.5 [mA]			
Output-compliant measurement range M_{min} to M_{max}		-40°C to 150°C (default)	PGA x1	±10.0V	The measurement range of 4mA to 20mA is assigned.
			PGA x2	±5.0V	
			PGA x4	±2.5V	
Alarm output	Current	Selection from 3.2, 22.8, and 24.0 [mA]			
	Condition	Output if an A/D conversion error continues for approximately 1 second. Cleared approximately 1 second after the A/D conversion error is resolved.			

4.5.1 Current Output Procedure

Figure 4-8 shows how the current is output.

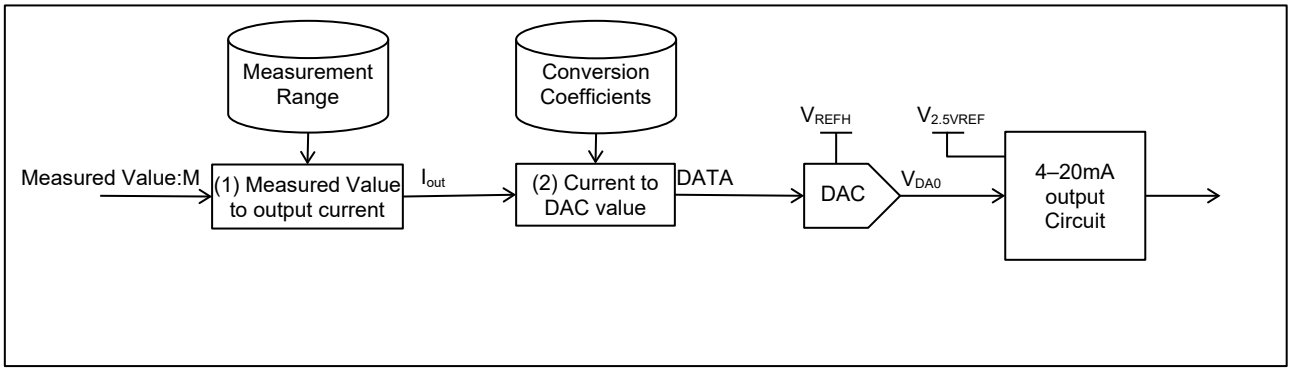

Figure 4-8 Method of Setting the Output within 4-20mA

(1) Conversion of the measurement value to an output current value

Assign the measurement range so that I_{min} is 4mA and I_{max} is 20mA. Calculate the current equivalent to the measurement value. If the calculated current exceeds the output range, the minimum or maximum value of the output current range is assumed.

$$I_{out} = \begin{cases} (M - M_{max}) \cdot \dfrac{(I_{min} - I_{max})}{(M_{max} - M_{min})} + I_{min} \\ I_{LIMITmin}:\ I_{out} < I_{LIMITmin} \\ I_{LIMITmax}:\ I_{out} > I_{LIMITmax} \end{cases}$$

(2) Conversion of the current value to a DAC setting value

Convert the current value I_{out} to the DAC setting value DATA from the DAC output value conversion coefficients a and b, a DAC resolution of 16 bits, and the DAC reference voltage V_{REFH} with the following formula:

$$DATA = \frac{2^{16}}{V_{REFH}} \cdot \frac{I_{out} - b}{a}$$

The initial value of the DAC output value conversion coefficients are defined from the circuit constant in Figure 4-1 and the reference voltage $V_{2.5VREF}$ of the 4-20mA output circuit as shown in the following formula:

$$I_{out} = \frac{R_{282}}{R_{283}R_{286}}\left(\frac{1}{R_{276}+R_{277}}(R_{276}V_{DA0}+R_{277}V_{2.5VREF})\right)$$
$$= \frac{R_{282}}{R_{283}R_{286}}\left(\frac{1}{R_{276}+R_{277}}\left(R_{276}V_{REFH}\frac{DATA}{2^{16}}+R_{277}V_{2.5VREF}\right)\right)$$

$$DATA = \frac{2^{16}}{V_{REFH}}\cdot\frac{I_{out}-\frac{R_{282}R_{277}V_{2.5\mathrm{VREF}}}{R_{283}R_{286}(R_{276}+R_{277})}}{\frac{R_{282}R_{276}}{R_{283}R_{286}(R_{276}+R_{277})}} = \frac{2^{16}}{V_{REFH}}\cdot\frac{I_{out}-b}{a}, \quad \begin{cases} a = \frac{R_{282}R_{276}}{R_{283}R_{286}(R_{276}+R_{277})} \\ b = \frac{R_{282}R_{277}V_{2.5\mathrm{VREF}}}{R_{283}R_{286}(R_{276}+R_{277})} \end{cases}$$

4.5.2 Current Output Calibration

By adjusting the DAC output value conversion coefficient to an appropriate value through calibration, current output errors caused by variations in circuit constants and other errors can be reduced.

In this example, based on the output current measurement value for the DAC output setting value, calibration is performed with the following procedure.

(1) Measurement of reference current output 1
Convert the reference output current I_{REF1} (20mA) with the present DAC output value conversion coefficients, set the resulting value $DATA_1$ in DAC, and measure the actual output current I_1.

(2) Measurement of reference current output 2
Convert the reference output current I_{REF2} (4mA) with the present DAC output value conversion coefficients, set the resulting value $DATA_2$ in DAC, and measure the actual output current I_2.

(3) Calculation of the DAC output value conversion coefficient
Calculate the conversion coefficient based on the DAC setting value $DATA_n$ (where n = 1 or 2) and the actual output current measurement value I_n. The DAC output voltage V_n for the DAC setting value DATAn can be expressed from the DAC reference voltage V_{REFH} and the DAC resolution of 16 bits with the following formula:

$$V_n = \frac{V_{REFH}}{2^{16}}\cdot DATA_{\mathrm{n}}$$

Calculate the coefficient from the measured current I_n and the DAC output voltage V_n with the following formula:

$$\begin{cases} a = \frac{I_1-I_2}{V_1-V_2} = \frac{I_1-I_2}{\frac{V_{REFH}}{2^{16}}(DATA_1-DATA_2)} \\ b = I_1 - aV_1 = I_2 - aV_2 \end{cases}$$

5. Sample Program

5.1 Overview

Figure 5-1 shows the process flow of this sample program.

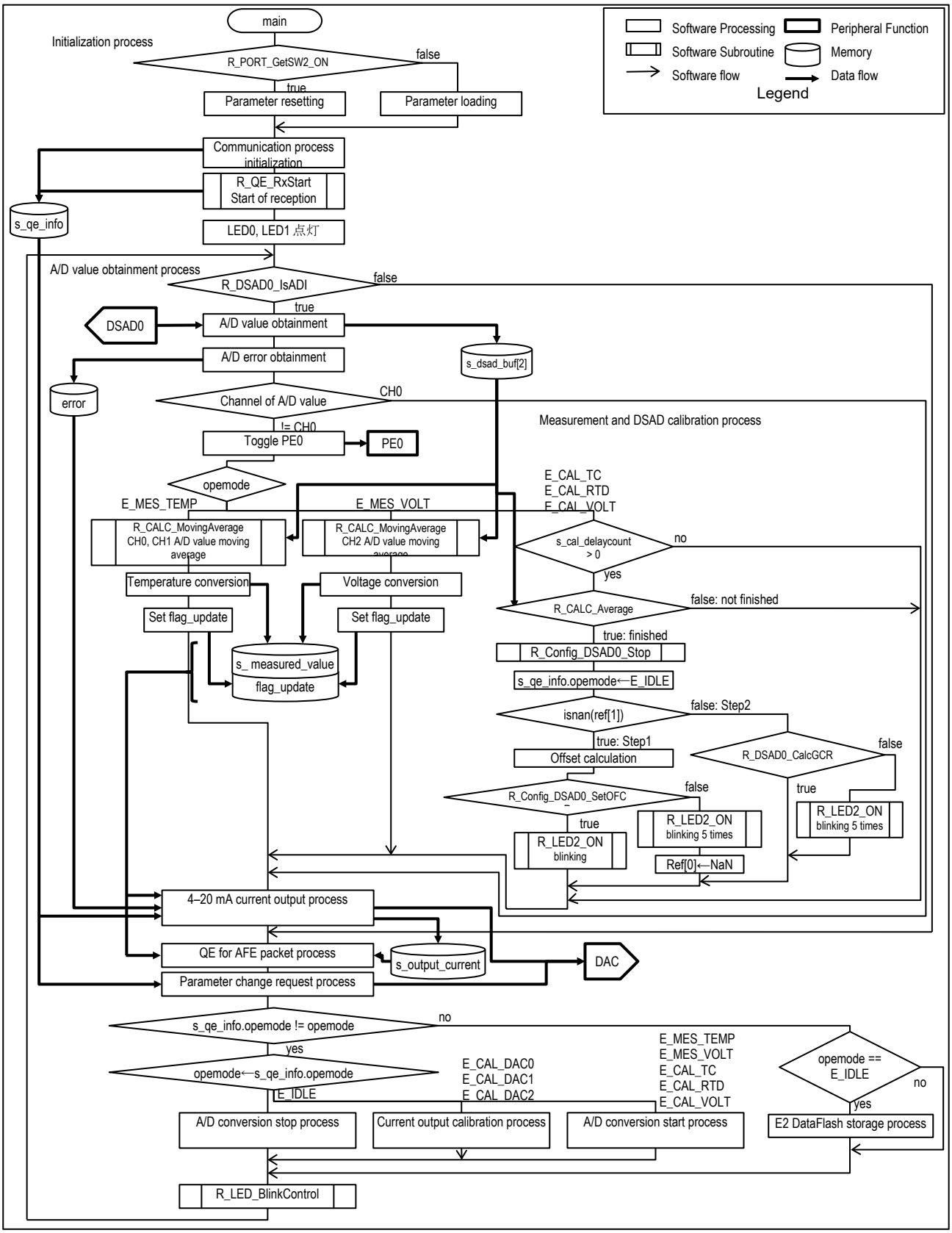

Figure 5-1 General Flow

This program specifies the operation with the member opemode of the s_qe_info structure variable. Operating modes are listed in Table 5-1.

Table 5-1 Operating Modes

Name	Description
E_IDLE	Standby
E_MES_TEMP	Temperature measurement
E_MES_VOLT	Voltage measurement
E_CAL_TC	Thermocouple voltage input calibration
E_CAL_RTD	Resistance temperature detector input calibration
E_CAL_VOLT	Voltage input calibration
E_CAL_DAC0	Current output calibration
E_CAL_DAC1	
E_CAL_DAC2	

The following sections provide overviews of each process.

- Initialization process
  - Measurement condition parameters are loaded.
    Measurement condition parameters stored in the E2 data flash are loaded.
    If SW2 is held down, the default values will be loaded.
    If the offset correction value and the gain correction value of the loaded parameters are defaults, these values will be changed to device-unique values.
  - DAC output starts.
    DAC output is performed with the initial value set to 4mA.
  - The communication process for the QE for AFE development tool starts.
    Various parameters for QE for AFE communication are initialized to start reception.
  - Turning LEDs ON
    LED0 and LED1, which indicate the end of the initialization process, are turned ON.

- A/D value obtainment process
  When the conversion end (ADI0) of the DSAD is detected, A/D conversion results are obtained and stored in the A/D value storage array.
  If the obtained A/D conversion results contain conversion errors, the error occurrences will be recorded.

- Measurement and DSAD calibration process
  The PE0 output, which indicates the start of this process, is inverted, and the obtained A/D value is processed with the opemode during the A/D conversion start and stop processes.
  - opemode: E_MES_TEMP
    The temperature is calculated from CH0 and CH1 A/D conversion results and stored as part of measurement results.
  - opemode: E_MES_VOLT
    The voltage is calculated from CH2 A/D conversion results and stored as part of measurement results.
  - opemode: E_CAL_TC, E_CAL_RTD, E_CAL_VOLT
    The calibration process is performed on the DSAD0 channel specified in the operating mode.

- 4-20mA output process
  The measurement results or alarm output is reflected in the output of DAC.
  If an error in the obtained A/D conversion results continues for approximately one second, the selected alarm current will be output. If the error clearing continues for approximately one second, the current calculated from the measurement results will be output.

- QE for AFE's receive/transmit packet process
  Processes packets from QE for AFE and transmits the measurement values and output current setting values during measurement, using the API of the QE communication module. If a transmission timeout is detected, the communication process will be reset.
  The processes for the user operations listed in Table 1-1 will be performed with the individual user functions of the QE for AFE communication module. For details about the QE for AFE communication module, refer to the Application Note "RX23E-B Group RSSKRX23E-B Board Control Program".

- Parameter change request process
  Changes to the following parameters for measurement conditions, which may be specified from the QE for AFE, are processed.
  — Temperature measurement rate selection
  — Temperature range specification
  — Alarm current selection
  — Output current specification
  — Change to DSAD0 setting

- Measurement and calibration start and end setting
  Sets measurement conditions and A/D conversion is started or stopped in accordance with the new "opemode" when "opemode" is changed,.
  — E_IDLE
    A/D conversion is stopped, and LED0 is turned ON.
  — E_CAL_DAC0, E_CAL_DAC1, E_CAL_DAC1
    Current calibration is processed based on "4.5.2 Current Output Calibration"
  — E_MES_TEMP, E_MES_VOLT, E_CAL_TC, E_CAL_RTD, E_CAL_VOLT
    The DSAD0 settings for each measurement or calibration, then A/D conversion are started.

- E2 data flash storage process
  If "opemode" does not change from E_IDLE, the E2 data flash storage parameters are updated if the measurement condition parameters are changed.

5.2 MCU Functions and Settings

The peripheral functions used in this example are listed in Table 5-2, and the pins used are listed in Table 5-3. Clock settings are listed in Table 5-4.

The settings for peripheral functions are generated by using the code generation function of the Smart Configurator. The settings for peripheral functions are shown in the following table and categorized by their respective uses.

Table 5-2 Peripheral Functions

Peripheral function	Use
AFE/DSAD0	A/D conversion of input signals, supply of BIAS to the thermocouple, and supply of excitation current to the resistance temperature detector
R16DA	4-20mA current output
SCI1	Communication with the QE for AFE
DMAC0	Reception of packets from the QE for AFE
DMAC1	Transmission of packets to the QE for AFE
CMT0	Detection of errors in the transmission of packets to the QE for AFE
CMT1	LED blinking cycle
P70 – P73	LED ON/OFF control
PE1 – PE4	Get Switch State
E2DataFlash	Saving of retention parameters

Table 5-3 Pins Used

Pin No.	Name	I/O	Use
1	DA0	O	DA output
5	P73	O	LED3
6	P72		LED2
7	P71		LED1
8	P70		LED0
13	XTAL	O	Crystal oscillator
15	EXTAL	I	
28	P30/RXD1	I	UART1 reception
30	P26/TXD1	O	UART1 transmission
39	P15/CTS1#	I	UART1 CTS input
62	PE4	I	SW3-2
63	PE3		SW3-1
64	PE2		SW2
65	PE1		SW1
66	PE0	O	Notification of the end of the A/D value obtainment process for measurement and DSAD calibration
74	REFOUT	O	Internal VREF output
80	REF0N	I	Input of DSAD0 reference voltage for measurement of the resistance temperature detector
81	REF0P		
82	AIN4	I	Input pin on the negative voltage side of the resistance temperature detector
83	AIN5		Input pin on the positive voltage side of the resistance temperature detector
87	AIN9	O	Output pin for the measurement of the excitation current of the resistance temperature
88	AIN10	I/O	Input pin on the negative voltage side of the thermocouple, bias voltage
89	AIN11	I	Input pin on the positive voltage side of the thermocouple
93	HVAIN2	I	Input pin on the negative voltage side for voltage measurement
94	HVAIN3		Input pin on the positive voltage side for voltage measurement

Table 5-4 Clock Configuration

Item		Setting
Clock used		Main clock
	Oscillation source	Resonator
	Frequency	8MHz
	Wait time	8192 (2048μs)
PLL circuit	Frequency Division	x1/2
	Frequency Multiplication	x8
SCKCR (FCLK)		x1 (32MHz)
SCKCR (ICLK)		x1 (32MHz)
SCKCR (PCLKA)		x1 (32MHz)
SCKCR (PCLKB)		x1 (32MHz)
SCKCR (PCLKC)		x1 (32MHz)
SCKCR (PCLKD)		x1 (32MHz)

5.2.1 Temperature and Voltage Measurement

AFE and DSAD0 are used for measurement. In addition, PE0 is used to output the toggle signal for notifying of the end of A/D value obtainment for the measurement and the DSAD calibration process. The following tables list the settings for each peripheral function.

Table 5-5 Settings for AFE

Item		Setting
Bias output setting	Enable bias voltage output	Enable
	AIN2 pin output	Disable
	AIN10 pin output	Enable
Excitation current output setting	Enable excitation current output	Enable
	Operation mode	Two-channel output mode
	Excitation current	500μA
	IEXC0 output pin	Output disabled
	IEXC0 disconnection detection assist	Not used
	IEXC1 output pin	AIN9
	IEXC1 disconnection detection assist	Not used
Low level voltage detection setting		Not used
Low-side switch setting		Not used

Table 5-6 Settings for Ports

Item	Setting
Port selection	PORTE
Used port	PE0
Setting	Out CMOS output Output 1

Table 5-7 Settings for the DSAD0

Continuous scan mode

Item		**Setting**		
Measuring target		**Temperature**		**Voltage**
Analog input channel setting		0	1	2
Operation clock setting		PCLK/2 (16MHz)		
Conversion start trigger source		Software trigger		
Interrupt setting	Enable ΔΣA/D conversion completion interrupt (ADI0)	Enable, Priority: Level 0 (Disabled)		
	Enable ΔΣA/D conversion scan completion interrupt (SCANEND0)	Disable		
	Enable ΔΣA/D channel change interrupt (CHCHG0)	Disable		
Voltage fault and disconnection setting		Not used		
Analog input setting	Positive input signal	AIN11	AIN5	HVAIN3
	Negative input signal	AIN10	AIN4	HVAIN2
	Reference input	REFOUT /AVSS0	REF0P /REF0N	REFOUT /AVSS0
	Positive reference voltage buffer	-	Enable	-
	Negative reference voltage buffer	-	Enable	-
Amplifier setting	Amplifier selection	PGA		
	PGA gain setting	x128	x32	x1
ΔΣA/D conversion setting	A/D conversion mode	Normal operation		
	Data format	Two's complement		
	A/D conversion number	1		
	First stage oversampling ratio	Table 5-8		256
	Second stage oversampling ratio			16
	Set offset calibration value	Not used		
	Set gain calibration value	Not used		
Disconnect detection assist setting		Disable		
Digital filter setting	Sinc filter select	Sinc4 + Sinc4		
	Set sinc filter gain calibration	Enable		
	Sinc filter gain calibration value	Table 5-8		1

Table 5-8 DSAD0 settings for Temperature Measurement

Bold: Default

Item		**Setting**			
	Measurement cycle	**300 (ms)**		**150 (ms)**	
	Analog input channel	**0**	**1**	**0**	**1**
ΔΣA/D conversion setting	First stage oversampling ratio	256		**256**	
	Second stage oversampling ratio	585		**292**	
Digital filter setting	Sinc filter gain calibration value	1.173508866 0x004B1AC4		**1.181567267** **0x004B9ECC**	

5.2.2 Communication

SCI1, DMAC0, DMAC1, and CMT0) are used for communication with the QE for AFE. The following tables list the settings for each peripheral function.

Table 5-9 Settings for the SCI1

Asynchronous Mode
Work mode: Transmission/Reception

Item		Setting
Start bit edge detection setting		Falling edge on the RXD1 pin
Data length setting		8 bits
Parity setting		None
Stop bit length setting		1 bit
Transfer direction setting		LSB-first
Transfer rate setting	Transfer clock	Internal clock
	Bit rate	4Mbps
	Enable modulation duty correction	Not used
	SCK1 pin function	SCK1 is not used
Noise filter setting		Not used
Hardware flow control setting		CTS1#
Data handling setting	Transfer data handling	Data handled by the DMAC
	Receive data handling	Data handled by the DMAC
Interrupt setting	Enable reception error interrupt (ERI1)	Not used
	TXI1, RXI1, TEI1, ERI1 priority	Level 0 (disabled)
Callback function setting		Not used

Table 5-10 Settings for the DMAC

Item		Setting	
		DMAC0	**DMAC1**
Transfer setting	Activation source	SCI1 (RXI1)	SCI1 (TXI1)
	Activation source flag control	Clear interrupt flag of the activation source	
	Transfer mode	Free running mode	Normal mode
	Transfer data size	8 bits	
	Transfer count / Repeat size / Block size	-	(Set on execution)
Source address setting	Source address	0x0008A025(SCI1.RDR) Fixed	(Set on execution) Incremented
	Specify the transfer source as extended repeat area	-	Enable
	Extended repeat area		Lower 9 bits of the address (512 bytes)
Destination address setting	Destination address	(Set by the program) Incremented	0x0008A023(SCI1.TDR) Fixed
	Specify the transfer destination as extended repeat area	Enable	-
	Extended repeat area	Lower 9 bits of the address (512 bytes)	
Interrupt setting		Not used	

Table 5-11 Settings for the CMT0

Item		Setting
Count clock setting		PCLKB/512
Compare match setting	Interval value	1000ms
	Compare match interrupt (CMI0)	Enable Priority: Level 0 (disabled)

5.2.3 4-20mA Current Output

The R16DA is used to set the current output to 4-20mA.

Table 5-12 Settings for the DA

Item		Setting
D/A channel0 setting	Use DA0.	Used
	Buffer amplifier output pull-Down	Used
Analog output impedance setting		Analog output pin is a pulled down by 1-kΩ resistor.
D/A A/D synchronous setting		Not used

5.2.4 LEDs and Switches

P70 to P73 are used to turn LEDs ON and OFF, and CMT1 is used for the blinking cycle. PE1 to PE4 are used to obtain the states of switches, SW1, SW2, and SW3.

Port settings are listed in Table 5-13, and settings for CMT1 are listed in Table 5-14.

Table 5-13 Settings for Ports

Item	Setting							
Port selection	PORT7				PORTE			
Used port	P70	P71	P72	P73	PE1	PE2	PE3	PE4
Setting	Out CMOS output Output 1				In			

Table 5-14 Settings for CMT1

Item		Setting
Count clock setting		PCLK/512
Compare match setting	Interval value	250ms
	Compare match interrupt (CMI1)	Enable Priority: Level 0 (disabled)

5.2.5 E2 Data Flash

The E2 data flash is used to retain setting parameters. The FIT flash module is used to access the E2 data flash.

Table 5-15 Settings for the FIT Flash Module

Item	Setting
Parameter check	Enable parameter checks
Enable code flash programming	Only data flash
Enable BGO/Non-blocking data flash operation	Forces data flash API function to block until completed.
Enable BGO/Non-blocking code flash operation	Forces ROM API function to block until completed.
Enable code flash self-programming	Programming code flash while executing in RAM.

5.3 Program Configuration

5.3.1 Source File Configuration

Table 5-16 File Configuration

Folder name, file name	Description
src	
├ smc_gen	Generated by Smart Configurator
│ ├ Config_AFE	
│ ├ Config_CMT0	
│ ├ Config_CMT1	
│ ├ Config_DA	
│ ├ Config_DMAC0	
│ ├ Config_DMAC1	
│ ├ Config_DSAD0	
│ ├ Config_PORT	
│ ├ Config_SCI1	
│ ├ general	
│ ├ r_bsp	
│ ├ r_config	
│ ├ r_flash_rx	
│ └ r_pincfg	
├ r_4_20ma_cfg.h	Definition of initial values
├ main.c	Main function
├ r_calc_api.c	Various calculations
├ r_calc_api.h	
├ r_crnt_api.h	Conversion process for 4-20mA output current
├ r_crnt_api.c	
├ r_crnt_cfg.h	
├ r_led_api.c	LED operation
├ r_led_api.h	
├ r_qe_api.c	QE for AFE communication module
├ r_qe_api_user.c	
├ r_qe_api.h	
├ r_qe_cfg.h	
├ r_qe_cfg_typedef.h	
├ r_qe_packet.h	
├ r_qe_sc_if.h	
├ r_ring_buffer_control_api.c	
├ r_ring_buffer_control_api.h	
├ r_rtd_api.h	Conversion process for the resistance temperature detector's temperature
├ r_rtd_api.c	
├ r_rtd_cfg.h	
├ r_thermocouple_api.h	Conversion process for the thermocouple's temperature
├ r_thermocouple_api.c	
├ r_thermocouple_cfg.h	
├ r_voltage_api.h	Conversion process for voltage measurement
├ r_voltage_api.c	
└ r_voltage_cfg.h	

5.3.2 Macro Definitions

Table 5-17 r_4_20mA_cfg.h Definitions

Definition name	Value	Description
D_CFG_MES_TEMP_RATE_INDEX	1	Initial value of temperature measurement cycle selection 0: 300ms 1: 150ms
D_CFG_CRNT_ALERT_INDEX	1	4-20mA alarm output selection initial value
D_CFG_CRNT_ALERT_TIME_SEC	1.0	4-20mA alarm output time constant
D_CFG_CAL_AVERAGE_NUM	128	Initial value for the average count for DSAD calibration
D_CFG_CAL_DELAY	5.0F	DSAD calibration start delay time [s]
D_CFG_TEMP_MOVINGAVERAGE_NUM	1	Initial value for the temperature measurement moving average number
D_CFG_VOLT_MOVINGAVERAGE_NUM	1	Initial value for the voltage measurement moving average number
D_CFG_XCRM_ERROR_VALUE	0x08000000	GCRm and OFCRm error values for initialization
D_CFG_TEMP_DSAD_PRM_DEFAULT_300MS	Refer to Table 5-8.	Initial value for the temperature measurement DSAD0 parameter
D_CFG_TEMP_DSAD_PRM_DEFAULT_150MS		
D_CFG_TEMP_RANGE_MIN	-40.0f	Lower limit for current output reflection during temperature measurement [°C]
D_CFG_TEMP_RANGE_MAX	160.0f	Upper limit for current output reflection during temperature measurement [°C]
D_CAL_AVERAGE_NUM_MIN	1	Minimum value for the calibration average count
D_CAL_AVERAGE_NUM_MAX	512	Maximum value for the calibration average count
D_MOVINGAVERAGE_NUM_MIN	1	Minimum value for the moving average number
D_MOVINGAVERAGE_NUM_MAX	128	Maximum value for the moving average number

Table 5-18 r_crnt_cfg.h Definitions

Definition name	Value	Description
D_CRNT_CFG _ALERT_INDEXES	3	Number of 4-20mA alarm output selections
D_CRNT_CFG _AEERT_CURRENT_0	3.2f	4-20mA alarm output current 0 [mA]
D_CRNT_CFG _AEERT_CURRENT_1	22.8f	4-20mA alarm output current 1 [mA]
D_CRNT_CFG _AEERT_CURRENT_2	24.0f	4-20mA alarm output current 2 [mA]
D_CRNT_CFG_DACVREF	5.0F	DAC reference voltage [V]
D_CRNT_CFG_RESOLUTION	16	Number of DAC bits
D_CRNT_CFG_DAC_ERROR_VALUE	0	DAC output setting value in the event of an error
D_CRNT_CFG_R276	36.0	4-20mA output circuit constant [kΩ]
D_CRNT_CFG_R277	10.0	
D_CRNT_CFG_R282	1.0	
D_CRNT_CFG_R283	1.8	
D_CRNT_CFG_R286	0.1	
D_CRNT_CFG_VREF	2.5	4-20mA output circuit reference voltage $V_{2.5VREF}$ [V]
D_CRNT_CFG_COEF_A_DEFAULT	Refer to “4.5.1Current Output Procedure”.	Initial value for the conversion coefficient of the DAC output setting value
D_CRNT_CFG_COEF_B_DEFAULT		

Table 5-19 r_rtd_cfg.h Definitions

Definition name	Value	Description
D_RTD_CFG_TYPE	1	Resistance temperature detector selection 1: 4-wire 2: 3-wire
D_RTD_CFG_RREF	5100.0	R_{REF} resistance value [Ω]
D_RTD_CFG_DSADRES	24	Resolution of A/D converter [bits]
D_RTD_CFG_OFFSET	0.0F	Resistance temperature detector's resistance value offset [Ω]

Table 5-20 r_thermocouple_cfg.h Definitions

Definition name	Value	Description
D_TC_CFG_VREF	2.5F	A/D conversion reference voltage [V]
D_TC_CFG_DSADRES	24	Resolution of A/D converter [bits]

Table 5-21 r_voltage_cfg.h Definitions

Definition name	Value	Description
D_VOLTAGE_CFG_VREF	2.5F	A/D conversion reference voltage (V)
D_VOLTAGE_CFG_DSADRES	24	Resolution of A/D converter [bits]

Table 5-22 r_qe_cfg.h Settings

Definition name	Value	Description
D_QE_CFG_TX_RINGBUF_SIZE	512U	Transmit ring buffer size [bytes]
D_QE_CFG_RX_RINGBUF_SIZE	512U	Receive ring buffer size [bytes]
D_QE_CFG_FORMAT_REV	3	Communication specifications revision
D_QE_CFG_READ	1	Register read permission
D_QE_CFG_WRITE	1	Register write permission
D_QE_CFG_USER_VAL0	1	User Value use setting 0: Non-use 1: Use
D_QE_CFG_USER_VAL1	1	
D_QE_CFG_USER_VAL2	1	
D_QE_CFG_USER_VAL3	1	
D_QE_CFG_USER_VAL4	0	
D_QE_CFG_USER_VAL5	0	
D_QE_CFG_USER_VAL6	0	
D_QE_CFG_USER_VAL7	0	
D_QE_CFG_EX_SPS	1	SPS information support 0: No 1: Yes
D_QE_CFG_EX_USER_BTN0	1	User Button use setting 0: Non-use 1: Use
D_QE_CFG_EX_USER_BTN1	1	
D_QE_CFG_EX_USER_BTN2	1	
D_QE_CFG_EX_USER_BTN3	1	
D_QE_CFG_EX_USER_BTN4	0	
D_QE_CFG_EX_USER_BTN5	0	
D_QE_CFG_EX_USER_BTN6	0	
D_QE_CFG_EX_USER_BTN7	0	
D_QE_CFG_CH0	0x3	Data transmission CH use setting 0x3: Measurement value transmission 0x0: Non-use
D_QE_CFG_CH1	0x3	
D_QE_CFG_CH2	0x0	
D_QE_CFG_CH3	0x0	
D_QE_CFG_CH4	0x0	
D_QE_CFG_CH5	0x0	
D_QE_CFG_CH6	0x0	
D_QE_CFG_CH7	0x0	
D_QE_CFG_CH8	0x0	
D_QE_CFG_CH9	0x0	
D_QE_CFG_CH10	0x0	
D_QE_CFG_CH11	0x0	
D_QE_CFG_CH12	0x0	
D_QE_CFG_CH13	0x0	
D_QE_CFG_CH14	0x0	
D_QE_CFG_CH15	0x0	
D_QE_CFG_TXT_INFO	"RX23E-B 4-20mA Transmitter”	Program information
D_QE_CFG_TXERRCHK_EN	1	Transmission error detection valid
D_QE_CFG_TIMEOUT	0	An error is detected with a timeout.
D_QE_CFG_SCI	1	SCI number used for communication
D_QE_CFG_DMAC_RX	0	Reception process DMAC channel
D_QE_CFG_DMAC_TX	1	Transmission process DMAC channel
D_QE_CFG_CMT	0	CMT number for timeout detection

5.3.3 Structures and Unions

Table 5-23 main.c List

Structure type name	st_e2df_data_t		
Description	Measurement condition parameters to store in the data flash		
Member	**Type**	**Name**	**Description**
	uint32_t	temp_index_rate	Temperature measurement cycle selection
	st_dsad0_prm_t	temp_dsad [D_MES_TEMP_INDEXES][2]	Temperature measurement DSAD0 parameter array
	st_crnt_range_t	temp_range	Range of current output reflection during temperature measurement
	uint32_t	calibration_average_num	A/D value average count for calibration
	st_crnt_coef_t	crnt_coef	DAC output setting value conversion coefficients
	uint32_t	alert_index	4-20mA alarm output selection
Structure type name	st_calibration_data_t		
Description	DSAD calibration parameter		
Member	**Type**	**Name**	**Description**
	float	ref[2]	Measurement values (Two points)
	float	val[2]	Obtained A/D values (Two points)
	st_dsad0_prm_t *	p_dsad_prm	Pointer to the DSAD0 parameter for temperature measurement
	uint32_t	target	Channel number of DSAD0
Union type name	st_alert_data_t		
Description	4-20mA alert detection parameter		
Member	**Type**	**Name**	**Description**
	uint32_t	err_count	Consecutive error count
	uint32_t	alert_count	Consecutive alert output count
	uint32_t	alert_threshold	Consecutive error count for alert output

Table 5-24 r_calc_api.h List

Structure type name	st_calc_moveavg_data_t		
Description	Moving average process parameter		
Member	**Type**	**Name**	**Description**
	int32_t	count	Number of obtained data items
	float	sumdata	Total sum of obtained data
	float *	p_deldata	Pointer to the storage array for obtained data
	int32_t	avgnum	Moving average number
Structure type name	st_calc_average_data_t		
Description	Average process parameter		
Member	**Type**	**Name**	**Description**
	uint32_t	num	Average number
	uint32_t	count	Number of obtained data items
	float	sum	Total sum of obtained data

Table 5-25 r_crnt_api.h List

Structure type name	st_crnt_range_t		
Description	Measurement value range		
Member	**Type**	**Name**	**Description**
	float	min	Measurement range lower limit value
	float	max	Measurement range upper limit value
Structure type name	st_crnt_coef_t		
Description	Conversion coefficient for the DAC output value		
Member	**Type**	**Name**	**Description**
	float	a	Coefficient a (slope)
	float	b	Coefficient b (intercept)
Structure type name	st_crnt_caldata_t		
Description	Calibration parameter for the conversion coefficient of the DAC output value		
Member	**Type**	**Name**	**Description**
	uint16_t	val[2]	DAC setting value (Two points)
	float	current[2]	Measurement current value (Two points)

Table 5-26 r_qe_cfg_typedef.h User Extensions

Enumeration type name	e_processing_mode_t		
Description	Internal process mode		
Member	**Name**	**Value**	**Description**
	E_MES_TEMP	0	Temperature measurement
	E_MES_VOLT	1	Voltage measurement
	E_CAL_TC	4	Thermocouple's input calibration
	E_CAL_RTD	5	Resistance temperature detector's input calibration
	E_CAL_VOLT	6	Voltage input calibration
	E_CAL_DAC0	8	Current output calibration STEP0
	E_CAL_DAC1	9	Current output calibration STEP1
	E_CAL_DAC2	10	Current output calibration STEP2
	E_IDLE	-1	Standby
	E_INITIAL	E_IDLE	Initial mode
Structure type name	st_qe_api_t		
Description	QE for AFE communication module parameter (only user extensions)		
Member	**Type**	**Name**	**Description**
	e_processing_mode_t	opemode	Internal process mode
	float *	p_dsad_cal_ref0	Pointer to the calibration measurement value0
	float	user_value[2]	QE for AFE: $Value_n$ receive value
	float	sps_temp	Temperature measurement rate
	float	sps_volt	Voltage measurement rate
	union	user_flags	User-defined flag
	uint8_t	flags	8-bit flag
	struct	bit	Assignment of each bit of the flag
	uint8_t:1	temp_rate_index	Request to change the temperature measurement rate
	uint8_t:1	temp_range	Request to change the temperature range
	uint8_t:1	alert	Request to change the selection of the 4-20mA alarm output current
	uint8_t:1	write_reg	Request to change the register setting
	uint8_t:1	out_current	Request for the specification of the 4-20mA output current

Table 5-27 Config_DSAD0.h User Definitions

Structure type name	st_dsad0_prm_t		
Description	DSAD0 setting parameter		
Member	**Type**	**Name**	**Description**
	uint8_t	pga	CRm register GAIN bit setting value
	uint32_t	osr	OSRm register setting value
	uint32_t	sgcr	SGCRm register setting value
	uint32_t	gcr	GCRm register setting value
	uint32_t	ofcr	OFCRm register setting value

5.3.4 Functions

Table 5-28 main.c

Function name	**main**			
Description	Main function			
Argument	**I/O**	**Type**	**Name**	**Description**
	-	void	-	-
Return value	O	void	-	

Table 5-29 r_crnt_api

Function name	**R_CRNT_ValToCurrent**			
Description	Calculates the output current value corresponding to the measurement value for the measurement value range. If the current value exceeds the limit current, returns the limit current value.			
Argument	**I/O**	**Type**	**Name**	**Description**
	I	float	val	Measurement value
	I	const st_crnt_range_t *	pRange	Pointer to the measurement value range
	O	float *	pRslt	Pointer to the storage location of the current value [mA]
Return value	O	bool	true: Normal termination false: Limited to current value	
Function name	**R_CRNT_CurrentToDAC**			
Description	Converts the current value to the DAC setting value, returns D_CRNT_CFG_DAC_ERROR_VALUE if failure.			
Argument	**I/O**	**Type**	**Name**	**Description**
	I	float	Val	Current value [mA]
	I	const st_crnt_coef_t *	pCoef	Pointer to the DAC output value conversion coefficients
	O	uint16_t *	pRslt	Pointer to the storage location of the DAC output value
Return value	O	bool	true: Success false: Failure	
Function name	**R_CRNT_CalcCoef**			
Description	Calculates the conversion coefficients of the DAC output value from the calibration parameter.			
Argument	**I/O**	**Type**	**Name**	**Description**
	I	st_crnt_caldata_t *	pCalData	Pointer to the calibration parameters
	O	st_crnt_coef_t *	pCoef	Pointer to the conversion coefficient of the DAC output value
Return value	O	bool	true: Success false: Failure	

Table 5-30 r_calc_api

Function name	**R_CALC_MovingAverage**			
Description	Calculates the average value for a specified moving average count.			
Argument	**I/O**	**Type**	**Name**	**Description**
	I	const float	data	Input value
	I/O	st_calc_moveavg_data_t *	p_cal_moveavg	Pointer to the moving averaging parameters
Return value	O	float	Moving average value	
Function name	**R_CALC_MovingAverageReset**			
Description	Resets the moving averaging parameters.			
Argument	**I/O**	**Type**	**Name**	**Description**
	I/O	st_calc_moveavg_data_t *	p_cal_moveavg	Pointer to the moving averaging parameters
	I	int32_t	average_num	Moving average number
Return value	-	void	-	
Function name	**R_CALC_Average**			
Description	Calculates the average value for a specified average count.			
Argument	**I/O**	**Type**	**Name**	**Description**
	I	float	input	Input value
	I/O	st_calc_average_data_t *	average	Pointer to the averaging parameters
	O	float *	result	Pointer to the averaging result storage destination
Return value	O	bool	true: Averaging completed false: Not completed	
Function name	**R_CALC_AverageInit**			
Description	Initializes the averaging parameters.			
Argument	**I/O**	**Type**	**Name**	**Description**
	I/O	st_calc_average_data_t *	average	Pointer to the averaging parameters
	I	uint32_t	num	Average count
Return value	-	void	-	
Function name	**R_CALC_BinarySearch**			
Description	determine the index of the table corresponding to the maximum value that is less than or equal to the specified value using a binary search.			
Argument	**I/O**	**Type**	**Name**	**Description**
	I	const float *	p_data_table	Pointer to the search ascending table
	I	uint16	table_size	Number of table elements
	I	float	data	Specified value
Return value	O	uint16_t	Index value	
Function name	**R_CALC_Lerp**			
Description	Determines y for x on the straight line that passes through two points (x0, y0) and (x1,y1).			
Argument	**I/O**	**Type**	**Name**	**Description**
	I	float	x0	x0 value
	I	float	y0	y0 value
	I	float	x1	x1 value
	I	float	y1	y1 value
	I	float	x	x value
Return value	O	float	y value	

Table 5-31 r_led_api

Function name	**R_LED_ON**			
Description	Specifies an LED to be turned ON, turned OFF, or to blink.			
Argument	**I/O**	**Type**	**Name**	**Description**
	I	uint32_t	led	LED number: 0 to 3
	I	bool	flag	true: ON false: OFF
	I	int32_t	count	Number of blinks 0: No blinking >0: Blinking count -1: Blinking without a specified count
Return value	-	void	-	
Function name	**R_LED_BlinkControl**			
Description	LED blinking process			
Argument	**I/O**	**Type**	**Name**	**Description**
	-	void	-	-
Return value	-	void	-	
Function name	**R_LED_IsBlink**			
Description	Acquires whether LED is blinking.			
Argument	**I/O**	**Type**	**Name**	**Description**
	I	uint32_t	led	LED number: 0 to 3
Return value	O	bool	true: Blinking false: Not blinking	

Table 5-32 r_rtd_api

Function name	**R_RTD_DsadToTemp**			
Description	Calculates the temperature from the A/D value of the DSAD0.			
Argument	**I/O**	**Type**	**Name**	**Description**
	I	float	dsad	A/D value
	O	float	gain	PGA gain
Return value	O	float	Resistance temperature detector's temperature [°C]	
Function name	**R_RTD_ResistanceToDSAD**			
Description	Calculates the A/D value of the DSAD0 from the resistance value of the resistance temperature detector.			
Argument	**I/O**	**Type**	**Name**	**Description**
	I	float	resistance	Resistance value [Ω]
	I	float	gain	PGA gain
Return value	O	float	A/D value	

Table 5-33 r_thermocouple_api

Function name	**R_TC_TempToEmf**			
Description	Calculates the thermoelectromotive force of the thermocouple from the temperature.			
Argument	**I/O**	**Type**	**Name**	**Description**
	I	float	temp	Temperature [°C]
Return value	O	float	Thermoelectromotive force [μV]	
Function name	**R_TC_EmfToTemp**			
Description	Calculates the temperature from the thermoelectromotive force of the thermocouple.			
Argument	**I/O**	**Type**	**Name**	**Description**
	I	float	emf	Thermoelectromotive force [μV]
Return value	O	float	Temperature [°C]	
Function name	**R_TC_DsadToEmf**			
Description	Calculates the thermoelectromotive force from the A/D value of the DSAD0.			
Argument	**I/O**	**Type**	**Name**	**Description**
	I	float	dsad	A/D value
	I	float	gain	PGA gain
Return value	O	float	Thermoelectromotive force [μV]	
Function name	**R_TC_VoltageToDSAD**			
Description	Calculates the A/D value of the DSAD0 from the voltage.			
Argument	**I/O**	**Type**	**Name**	**Description**
	I	float	voltage	Voltage [V]
	I	float	gain	PGA gain
Return value	O	float	A/D value	

Table 5-34 r_voltage_api

Function name	**R_VOLTAGE_DsadToVoltage**			
Description	Calculates the voltage from the A/D value of the DSAD0.			
Argument	**I/O**	**Type**	**Name**	**Description**
	I	float	dsad	A/D value
	O	float	gain	PGA gain
Return value	O	float	Voltage [V]	
Function name	**R_VOLTAGE_VoltageToDSAD**			
Description	Calculates the A/D value of the DSAD0 from the resistance value of the resistance temperature detector.			
Argument	**I/O**	**Type**	**Name**	**Description**
	I	float	voltage	Voltage [V]
	I	float	gain	PGA gain
Return value	O	float	A/D value	

Table 5-35 r_qe_api_user.c User-Defined Processes

Only user processes are listed.

Function name	**r_QE_NegotiationUser**
Description	Turns off LED1
Function name	**r_QE_WriteUser**
Description	Accepts if opemode is E_IDLE and sets flags.write_reg
Function name	**r_QE_RunUser**
Description	Accepts if opemode is E_IDLE and *pdsad_cal_ref0 is NaN, and sets opemode to E_MES_TEMP or E_MES_VOLT based on the states of SW3-1.
Function name	**r_QE_StopUser**
Description	accepts If opemode is E_MES_TEMP or E_MES_VOLT, and sets opemode to E_IDLE.
Function name	**r_QE_UserValueUser** Note
Description	Judges whether to accept the request for each User Value No., and if accepting it, sets opemode or sets the corresponding flag, and stores the received value in user_value.
Function name	**r_QE_ExSpsInfoUser**
Description	Creates sps information from sps_temp or sps_volt based on the states of SW3-1.
Function name	**r_QE_ExUseButtonStatusUser** Note
Description	Judges whether to accept the request for each Button No., and if accepting it, sets the corresponding flag.
Function name	**r_QE_ResetUser**
Description	Sets opemode to E_IDLE and turns LED1 ON.

Note: For details on corresponding QE for AFE functions, refer to Table 1-1 and Table 1-2.

Table 5-36 Config_CMT1 User-Defined Functions

Function name	**R_CMT1_IsCompareMatch**			
Description	Detects a CMT1 compare match.			
Argument	**I/O**	**Type**	**Name**	**Description**
	-	void	-	-
Return value	O	bool	true: Compare match detected false: Compare match not detected	
Function name	**R_CMT1_IsCount**			
Description	Obtains the operating state of CMT1 (macro function).			
Argument	**I/O**	**Type**	**Name**	**Description**
	-	void	-	-
Return value	O	bool	true: Counting false: Stopped	

Table 5-37 Config_DSAD0 User-Defined Functions (1/3)

Function name	**R_Config_DSAD0_CHnEN**			
Description	Specifies A/D conversion channel.			
Argument	**I/O**	**Type**	**Name**	**Description**
	I	uint8_t	channel	Specify the channel to enable with each corresponding bit. 1: Enabled 0: Disabled
Return value	-	void	-	
Function name	**R_Config_DSAD0_SetParam**			
Description	Sets parameters for a specified channel.			
Argument	**I/O**	**Type**	**Name**	**Description**
	I	uint32_t	ch	Channel to set parameter
	I	st_dsad0_prm_t *	prm	Pointer to the DSAD0 setting parameters
Return value	-	void	-	
Function name	**R_Config_DSAD0_SetOFCR**			
Description	Sets a value for the OFCRm register of a specified channel.			
Argument	**I/O**	**Type**	**Name**	**Description**
	I	uint32_t	ch	Channel to set a value
	I	int32_t	ofs	Setting value
Return value	O	bool	true: Success false: Failure. The setting value is out of range.	
Function name	**R_Config_DSAD0_SetGCR**			
Description	Sets a value for the GCRm register of a specified channel.			
Argument	**I/O**	**Type**	**Name**	**Description**
	I	uint32_t	ch	Channel to set a value
	I	uint32_t	gcr	Setting value
Return value	O	bool	true: Success false: Failure. The setting value is out of range.	
Function name	**R_DSAD0_IsADI**			
Description	Detects ADI0.			
Argument	**I/O**	**Type**	**Name**	**Description**
	-	void	-	-
Return value	-	void	-	
Function name	**R_DSAD0_GetMaxVoltage**			
Description	Calculates the maximum measurable input voltage from the PGA gain.			
Argument	**I/O**	**Type**	**Name**	**Description**
	I	float	gain	PGA gain
Return value	O	float	Maximum measurable input voltage [V]	
Function name	**R_DSAD0_GetMultiScanRate**			
Description	Calculates the channel scan rate of specified multiple channels.			
Argument	**I/O**	**Type**	**Name**	**Description**
	I	uint8_t	channel	Specify the target channel with the corresponding bit. 1: Valid 0: Invalid
Return value	O	float	Scan rate per sec	

Table 5-38 Config_DSAD0 User-Defined Functions (2/3)

Function name	**R_DSAD0_PGAToGain**			
Description	Calculates the PGA gain from the CRm.GAIN setting value.			
Argument	**I/O**	**Type**	**Name**	**Description**
	I	uint8_t	pga	CRm.GAIN setting value
Return value	O	float	PGA gain	
Function name	**R_DSAD0_GetPGAGain**			
Description	Calculates the PGA gain of a specified channel.			
Argument	**I/O**	**Type**	**Name**	**Description**
	I	uint32_t	ch	Channel to obtain the value
Return value	O	float	PGA gain	
Function name	**R_DSAD0_CalcGCR**			
Description	Calculates the gain correction value of the GCRm register from the A/D expected value and the A/D conversion results and sets it.			
Argument	**I/O**	**Type**	**Name**	**Description**
	I	float	val	Obtained A/D value
	I	float	ref	Expected A/D value
	I	uint32_t *	gcr	Pointer to set the gain correction value
Return value	O	bool	true: Success false: Failure. The calculation results are out of range.	
Function name	**R_DSAD0_GetOSRValue**			
Description	Obtains the oversampling ratio of a specified channel.			
Argument	**I/O**	**Type**	**Name**	**Description**
	I	uint32_t	ch	Channel to obtain the value
Return value	O	uint32_t	Oversampling ratio	
Function name	**R_DSAD0_GetGAIN**			
Description	Obtains the CRm.GAIN setting value of a specified channel (macro function).			
Argument	**I/O**	**Type**	**Name**	**Description**
	I	uint32_t	ch	Channel to obtain the value
Return value	O	uint8_t	CRm.GAIN setting value of the specified channel	
Function name	**R_DSAD0_GetOFCR**			
Description	Obtains the OFCRm register setting value of a specified channel (macro function).			
Argument	**I/O**	**Type**	**Name**	**Description**
	I	uint32_t	ch	Channel to obtain the value
Return value	O	int32_t	OFCRm register setting value of the specified channel	
Function name	**R_DSAD0_GetGCR**			
Description	Obtains the GCRm register setting value of a specified channel (macro function).			
Argument	**I/O**	**Type**	**Name**	**Description**
	I	uint32_t	ch	Channel to obtain the value
Return value	O	int32_t	GCRm register setting value of the specified channel	
Function name	**R_DSAD0_GetGCRAddr**			
Description	Obtains the GCR register address of a specified channel (macro function).			
Argument	**I/O**	**Type**	**Name**	**Description**
	I	uint32_t	ch	Channel to obtain the value
Return value	O	int32_t	GCR register address	

Table 5-39 Config_DSAD0 User-Defined Functions (3/3)

Function name	**R_DSAD0_ConvSignedValue**			
Description	Obtains the signed A/D value from the DR register value (macro function).			
Argument	**I/O**	**Type**	**Name**	**Description**
	-	uint32_t	val	DR register value
Return value	O	int32_t	Signed A/D value	
Function name	**R_DSAD0_GetChannel**			
Description	Obtains channel information from the DR register value (macro function).			
Argument	**I/O**	**Type**	**Name**	**Description**
	I	uint32_t	val	DR register obtainment value
Return value	O	uint32_t	Channel information	
Function name	**R_DSAD0_GetErrorFlags**			
Description	Extracts the ERR and OVF flags from the DR register value (macro function).			
Argument	**I/O**	**Type**	**Name**	**Description**
	I	uint32_t	val	DR register obtainment value
Return value	O	uint32_t	ERR and OVF flags	

Table 5-40 Config_PORT User-Defined Functions

Function name	**R_Config_PORT_LED0_ON** **R_Config_PORT_LED1_ON** **R_Config_PORT_LED2_ON** **R_Config_PORT_LED3_ON**			
Description	Turns each LED ON and OFF.			
Argument	**I/O**	**Type**	**Name**	**Description**
	-	bool	flag	true: ON false: OFF
Return value	-	void	-	
Function name	**R_Config_PORT_LED0_Blink** **R_Config_PORT_LED1_Blink** **R_Config_PORT_LED2_Blink** **R_Config_PORT_LED3_Blink**			
Description	Inverts the ON/OFF state of each LED.			
Argument	**I/O**	**Type**	**Name**	**Description**
	-	void	-	-
Return value	-	void	-	
Function name	**R_PORT_LED0_IsON** **R_PORT_LED1_IsON** **R_PORT_LED2_IsON** **R_PORT_LED3_IsON**			
Description	Obtains the ON/OFF states of each LED.			
Argument	**I/O**	**Type**	**Name**	**Description**
	-	void	-	-
Return value	O	bool	true: ON false: OFF	
Function name	**R_PORT_GetSW1_ON** **R_PORT_GetSW2_ON** **R_PORT_GetSW3_1_ON** **R_PORT_GetSW3_2_ON**			
Description	Obtains the states of each switch.			
Argument	**I/O**	**Type**	**Name**	**Description**
	-	void	-	-
Return value	O	bool	true: Pressing false: Releasing	

6. Importing a Project

After importing the sample project, make sure to confirm build and debugger setting.

6.1 Importing a Project into e2 studio

Follow the steps below to import your project into e^2 studio. Pictures may be different depending on the version of e^2 studio to be used.

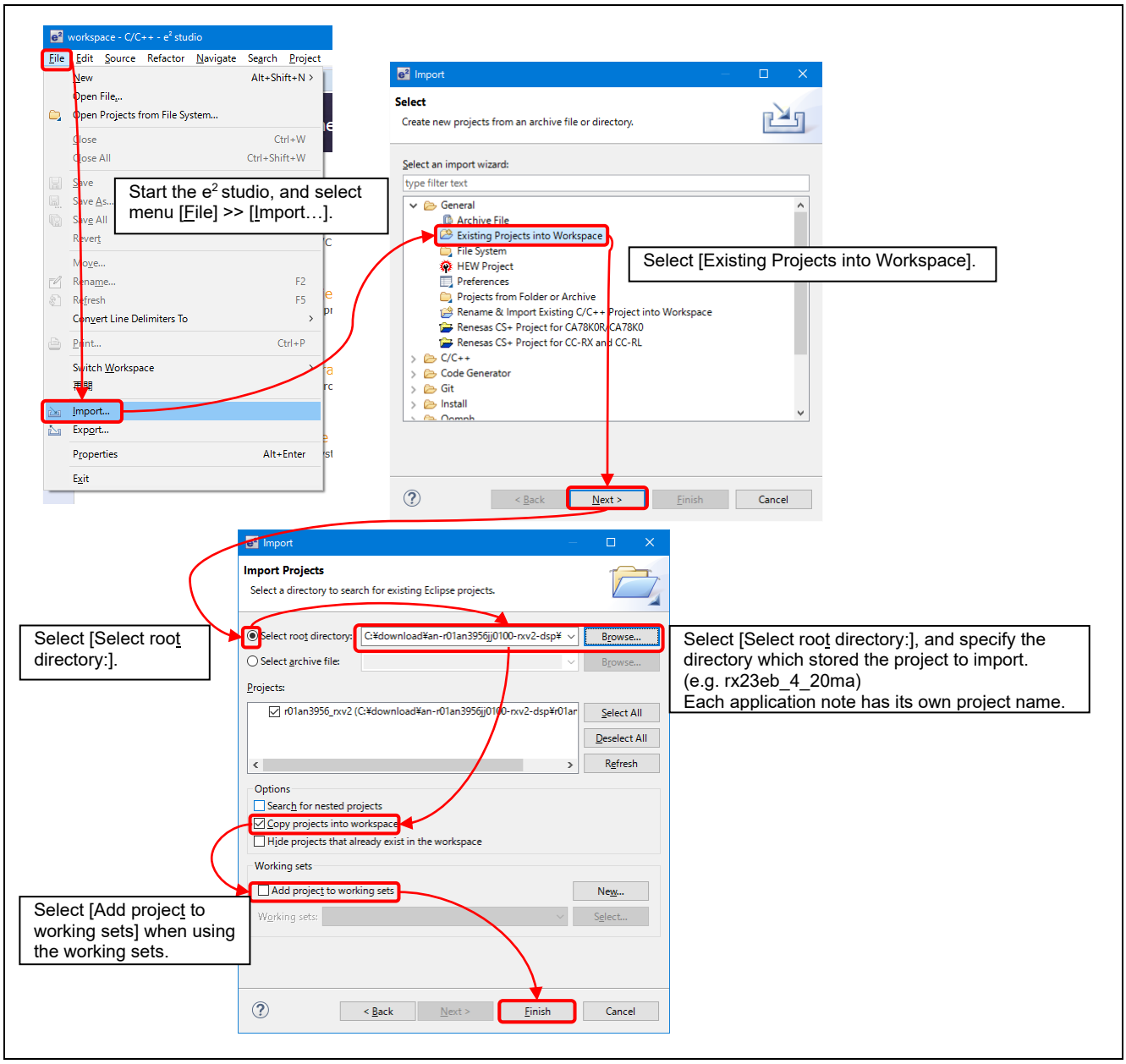

Figure 6-1 Importing a Project into e^2 studio

6.2 Importing a Project into CS+

Follow the steps below to import your project into CS+. Pictures may be different depending on the version of CS+ to be used.

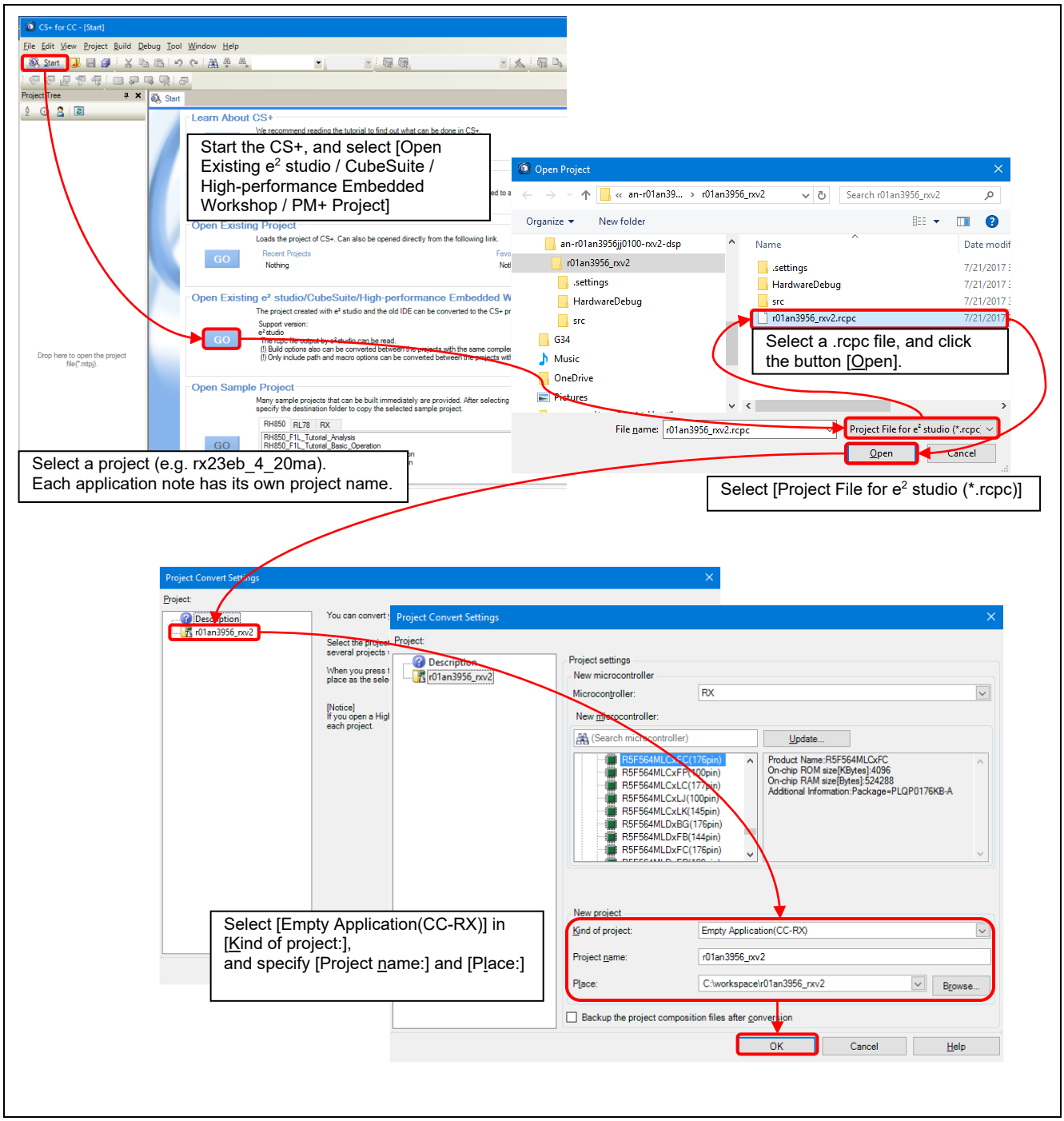

Figure 6-2 Importing a Project into CS+

7. Measurement Results with Sample Program

7.1 Memory Usage and Number of Execution Cycles

7.1.1 Build Conditions

The build conditions for the sample program are listed in Table 7-1.

Table 7-1 Build Conditions

Item		Setting
Compiler		-isa=rxv2 -utf8 -nomessage -output=obj -obj_path=${workspace_loc:/${ProjName}/${ConfigName}} -debug -outcode=utf8 -listfile="$(dir $@)\$(basename $(notdir $<)).lst" -show=source,conditionals,definitions,expansions -nologo
Linker		-noprelink -output="rx23eb_4_20ma.abs" -form=absolute -nomessage -vect=_undefined_interrupt_source_isr -list=rx23eb_4_20ma.map -show=all -nooptimize -rom=D=R,D_1=R_1,D_2=R_2 -cpu=RAM=00000000-00007fff,FIX=00080000-00083fff, FIX=00086000-00087fff,FIX=00088000-0008dfff,FIX=00090000-0009ffff, FIX=000a0000-000bffff,FIX=000c0000-000fffff,ROM=00100000-00101fff, FIX=007fc000-007fc4ff,FIX=007ffc00-007fffff,ROM=fffc0000-ffffffff -nologo
	Section	SU,SI,B_1,R_1,B_2,R_2,B,R/04,B_DMAC_REPEAT_AREA_1/04000, C_DATAFLASH/0100000,PResetPRG,C_1,C_2,C,C$*,D*,W*,L, P/0FFFC0000,EXCEPTVECT/0FFFFFF80,RESETVECT/0FFFFFFFC

Note: Include paths are omitted except those for user settings of the compiler settings.

7.1.2 Memory Usage

The amount of memory usage of the sample program is shown in Table 7-2.

Table 7-2 Amount of Memory Usage

Item		Size [byte]	Remarks
ROM		22953	
	Code	13634	
	Data	9319	
E2 DataFlashROM		108	
RAM		14543 (10395)	Note
	Data	9423	
	Stack	5120 (972)	Note

Note: RAM usage shown in parentheses "()" is calculated from stack usage.

7.1.3 Number of Execution Cycles and Processing Time

The number of CPU execution cycles and other items during temperature measurement and during voltage measurement are shown in Table 7-3 and Table 7-4, respectively.

Table 7-3 Execution Cycles, Execution Time, and Processing Load (temperature measurement)

ICLK=32 MHz

DSAD0 conversion period: 75.00525ms

Item	Execution cycles (Execution time)	Process load [%]	Condition
A/D value acquisition process	42cycle (1.31μs)	0.0017	On CH1 obtained
Measurement process	360cycle (11.25μs)	0.0150	
4-20mA output process	325cycle (10.16μs)	0.0135	Normal output
QE for AFE communication processing	430cycle (13.44μs)	0.0179	Sending measured values
Others	477cycle (14.91μs)	0.0199	
Total	1634cycle (51.06μs)	0.0681	

Note: The processing load is calculated with the execution time in the conversion period of the DSAD0.

Table 7-4 Execution Cycles, Execution Time, and Processing Load (voltage measurement)

ICLK=32 MHz

DSAD conversion period: 1.024ms

Item	Execution cycles (Execution time)	Process load [%]	Condition
A/D value acquisition process	46cycle (1.40μs)	0.1404	
Measurement process	72cycle (2.25μs)	0.2197	Normal output
4-20mA output process	325cycle (10.16μs)	0.9918	Sending measured values
QE for AFE communication processing	430cycle (13.44μs)	1.3123	
Others	477cycle (14.91μs)	1.4557	
Total	873cycle (27.28μs)	2.6642	

Note: The processing load is calculated with the execution time in the conversion period of the DSAD0.

7.2 Current Output Accuracy Evaluation

7.2.1 Configuration of Current Output Accuracy Evaluation

The configuration of current output evaluation is shown in Figure 7-1, and the equipment used in measurement is listed in Table 7-5. In Figure 7-1, the output current is measured with a multimeter. A voltage conversion resistor R_d (250Ω) is inserted between the low side of the multimeter and AVSS0.

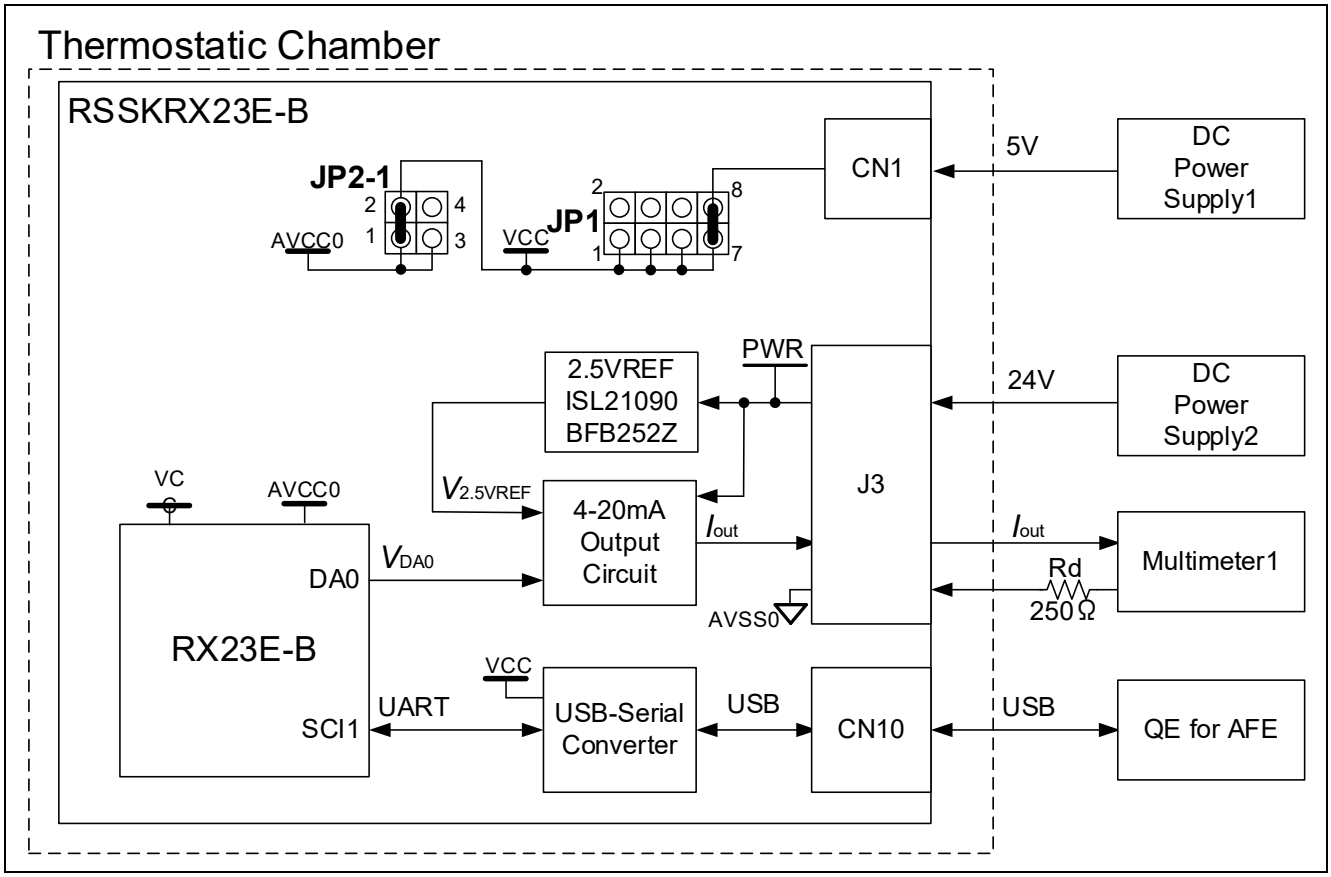

Figure 7-1 Configuration of Current Output Accuracy Evaluation

Table 7-5 Equipment Used in Current Output Accuracy Evaluation

Equipment used	Model	Manufacturer
DC Power Supply1	PA14A1	ShibaSoku Co., Ltd.
DC Power Supply2	PA36-1.5AD	TEXIO TECHNOLOGY CORPORATION.
Multimeter1	34401A	Keysight Technologies
Thermostatic Chamber	SU-241	ESPEC CORP.

7.2.2 Current Output Accuracy Evaluation Results

The board was placed in a thermostatic chamber at set temperatures of -25°C, 25°C, and 85°C. Under each temperature condition, Figure 7-2 shows the measurement current error err between the output current I_{out} measured with a multimeter and the current I_{ref} set in 2mA increments from 4mA to 20mA.

The measurement current error err is the difference between the set current and the measured current divided by 16 mA, the current output range of 4 mA-20 mA, as shown in the equation below, and is expressed as an error (%FS) relative to full scale.

$$err = \left(I_{out} - I_{ref}\right) \cdot \frac{100}{16} \ [\%FS]$$

In measurement, current output calibration was conducted only once when the set temperature of the thermostatic chamber was 25°C.

From the measurement results, it was confirmed that the output current error was less than 0.1%FS.

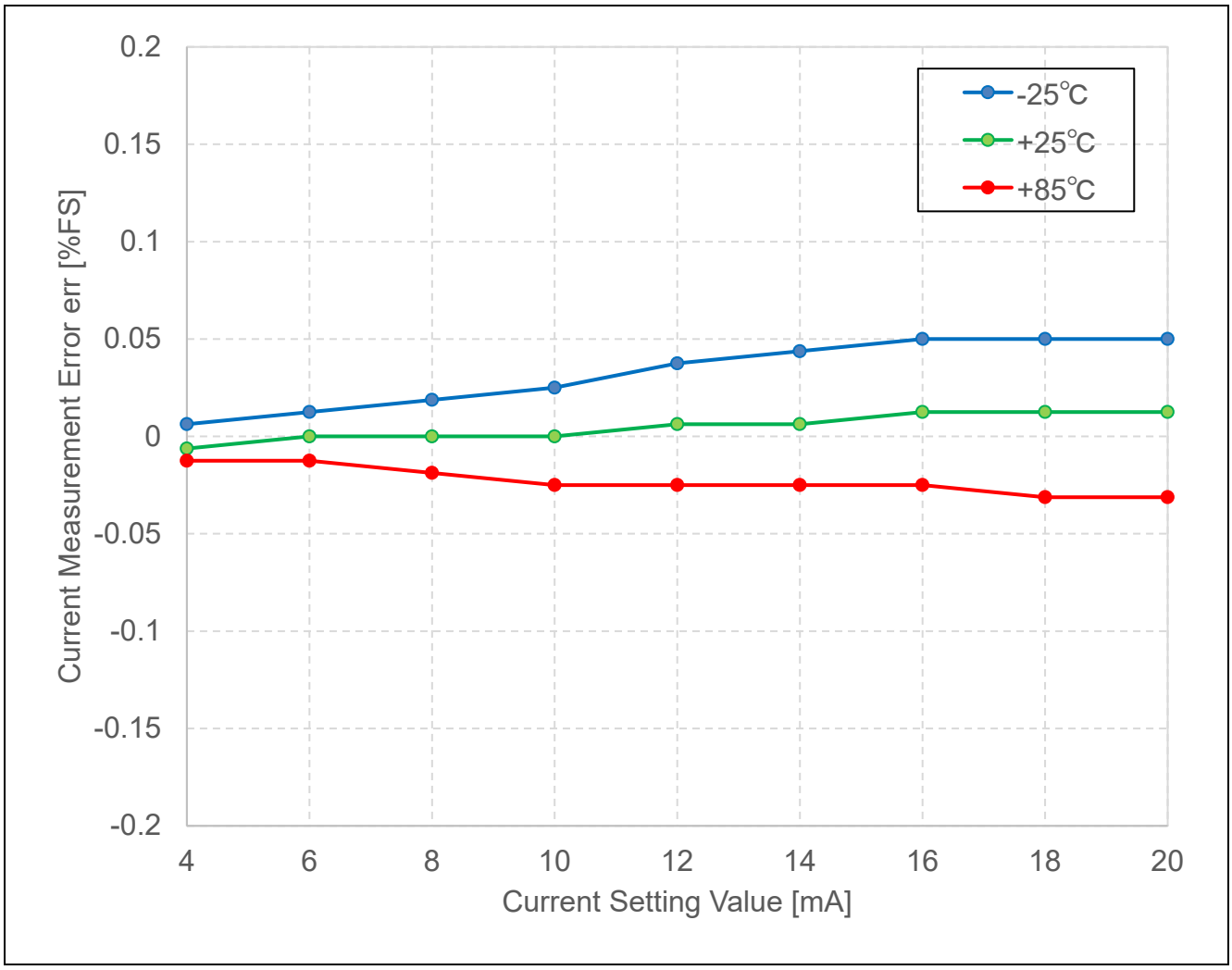

Figure 7-2 Current Output Accuracy Evaluation Results

7.3 Current Output Evaluation during Temperature Measurement

7.3.1 Configuration of Current Output Evaluation during Temperature Measurement

The configuration of current output evaluation during temperature measurement is shown in Figure 7-3, and the equipment used in measurement is listed in Table 7-6. In Figure 7-3, the 4-20mA output current I_{out} is measured with a multimeter. The thermocouple to be measured is thermally coupled to a 4-wire RTD for reference temperature measurement and placed in a thermostatic chamber. The 4-wire RTD for reference temperature measurement is measured with a multimeter.

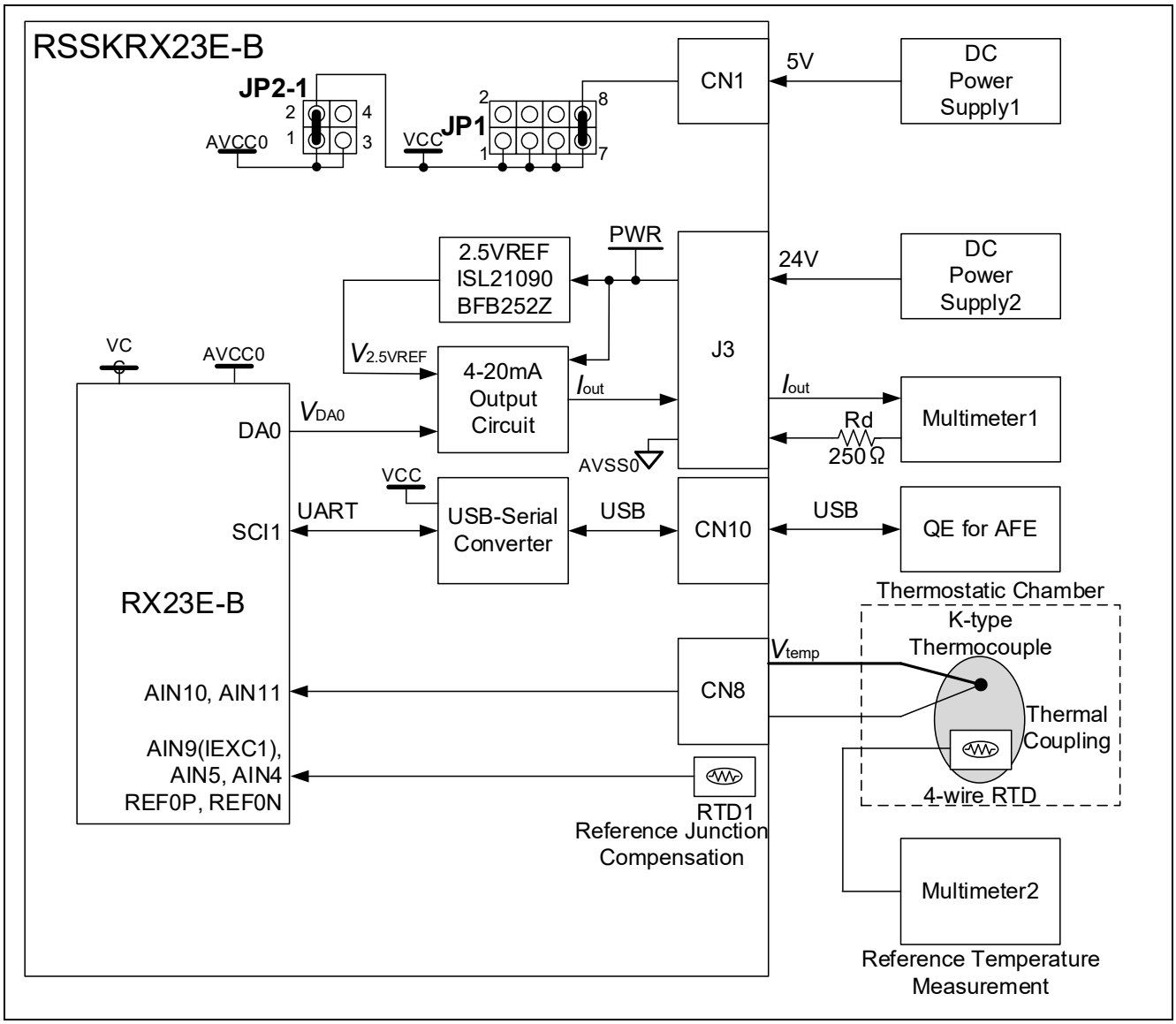

Figure 7-3 Configuration of Current Output Evaluation during Temperature Measurement

Table 7-6 Equipment Used in Current Output Evaluation during Temperature Measurement

Item	Model	Manufacturer
DC Power Supply1	PA14A1	ShibaSoku Co., Ltd.
DC Power Supply2	PA36-2A	TEXIO TECHNOLOGY CORPORATION.
Multimeter1	34401A	Keysight Technologies
Multimeter2	34461A	Keysight Technologies
Thermostatic Chamber	SU-241	ESPEC CORP.

7.3.2 Results of Current Output Evaluation during Temperature Measurement

The temperature inside the thermostatic chamber at each set temperature is measured with a thermocouple, the temperature measurement result is output to a 4-20 mA output current, the output current I_{out} at that time is measured with a multimeter, and the measured current value is converted to a measured temperature.The measured temperature error err or each thermostatic chamber setting temperature is shown in Figure 7-4.

The measurement temperature error err is calculated by the difference between the measured temperature T_{out} converted from the output current value and the measured temperature T_{ref} of the 4-wire RTD for reference temperature measurement measured by the multimeter, as shown in the equation below.

As an index of accuracy, the value obtained by adding the tolerance of the K-type thermocouple used for measurement and the tolerance of the on-board 4-wire RTD for reference junction compensation is shown by the gray dotted line.

$$err = (T_{out} - T_{ref})\ [℃]$$

From Figure 7-4, it was confirmed that the temperature error was within the accuracy of the thermocouple calibrator. The thermocouple measurement is calibrated once with the voltage corresponding to the thermal electromotive force (emf) at two points (-40°C and 160°C), and the on-board 4-wire RTD for reference junction compensation measurement is calibrated once with the resistance corresponding to two points (0°C and 85°C).

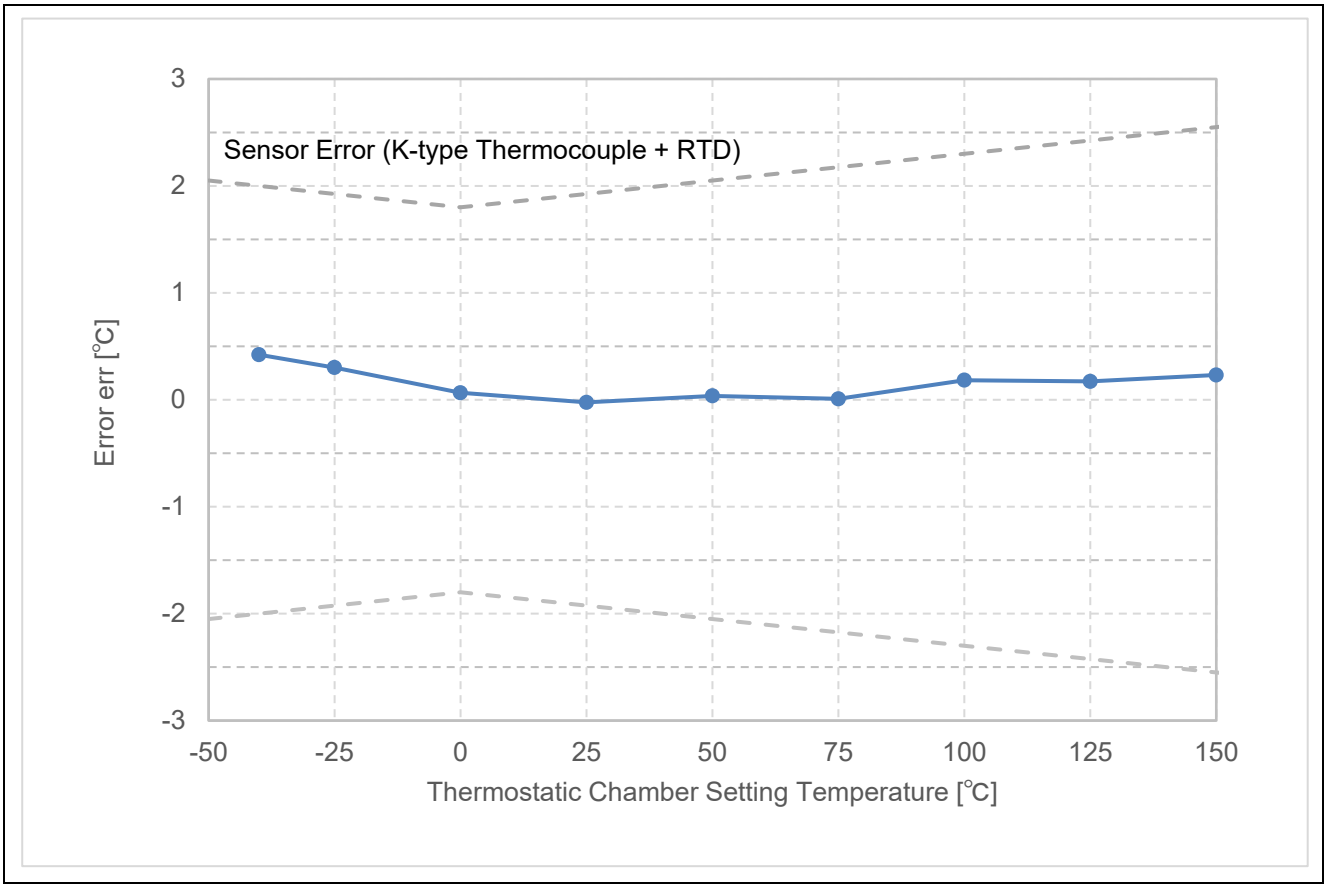

Figure 7-4 Results of Current Output Evaluation during Temperature Measurement

7.4 Response Characteristics Evaluation

7.4.1 Configuration of Response Characteristics Evaluation

The configuration for response characteristic evaluation is shown in Figure 7-5 and the equipment used for the measurements is shown in Table 7-7.In Figure 7-3, an oscilloscope is used to measure the output current I_{out}, the DA0 output V_{DA0}, and the test toggle signal output V_{toggle} that toggles when the A/D value acquisition is completed, and the time from the completion of A/D value acquisition until the output current value reaches the target value and the time until the output current value begins to change. The time from the completion of A/D value acquisition until the output current value reaches the target value and the time until the DA0 pin voltage begins to change.

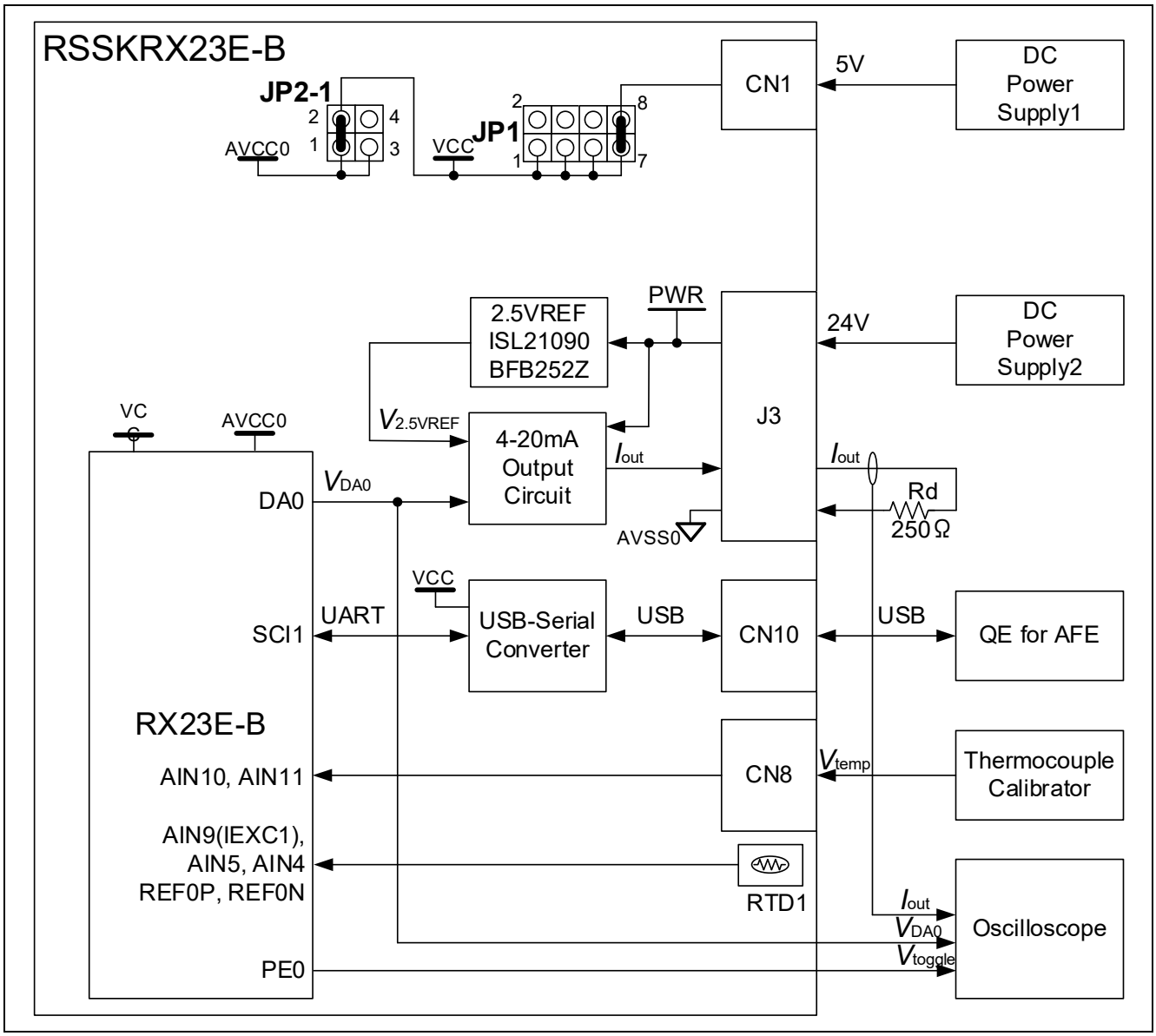

Figure 7-5 Configuration of Response Characteristics Evaluation

Table 7-7 Equipment Used in Response Characteristics Evaluation

Item	Model	Manufacturer
DC Power Supply1	PA14A1	ShibaSoku Co., Ltd.
DC Power Supply2	PA36-1.5AD	TEXIO TECHNOLOGY CORPORATION.
Oscilloscope	DL9505L	Yokogawa Test & Measurement Corporation
Current Probe	701932	Yokogawa Test & Measurement Corporation
Thermocouple Calibrator	CA320	Yokogawa Test & Measurement Corporation

7.4.2 Response Characteristics Evaluation Results

The output of the thermocouple calibrator was set so that the output current varied from 4mA to 20mA, and the current waveform at that time was measured with an oscilloscope. The current response waveform is shown in Figure 7-6, the DA0 output reflection time in Figure 7-7, and a summary of the results in Table 7-8.

From Figure 7-6, it can be confirmed that the 95% settling time of the current conversion circuit is approximately 1.3ms, and since the 95% settling time of the 4-20mA output stage filter circuit consisting of R276, R277, R278, and C131 is approximately 1.3ms, this response is dependent on the filter time constant of the 4-20mA output current circuit. This response is dependent on the filter time constant of the 4-20mA output current circuit. Also, from Figure 7-7, it can be confirmed that the MCU processing has little effect on the response time, which is approximately 20μs from the acquisition of the A/D value to the occurrence of the DA0 voltage change.

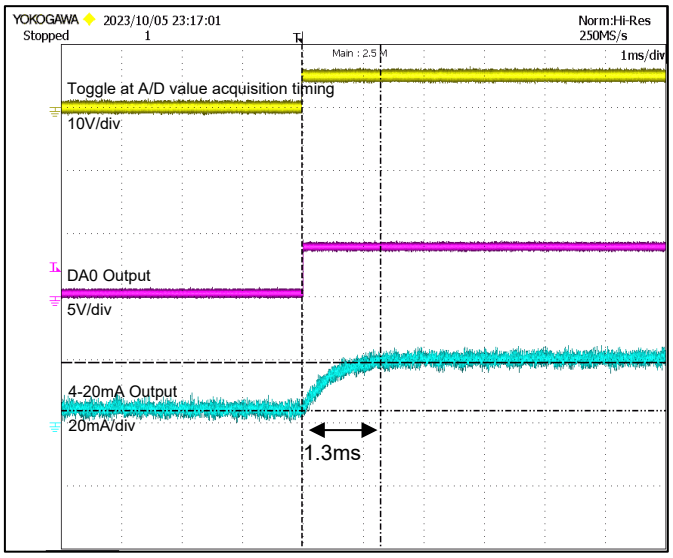

Figure 7-6 Waveform of Current Response

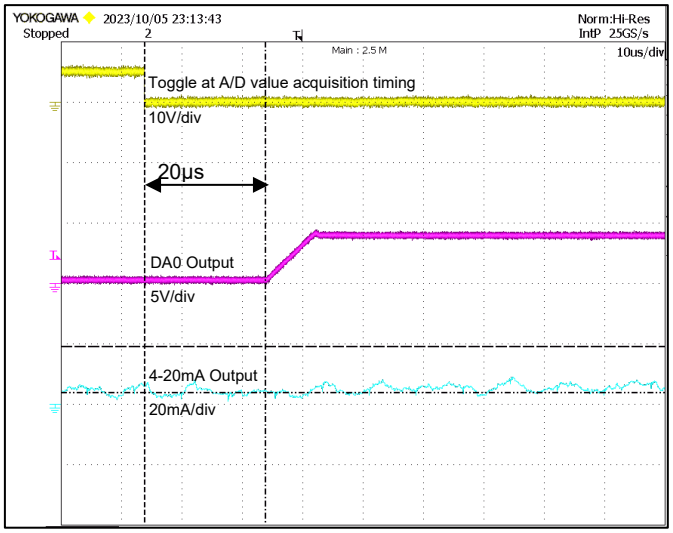

Figure 7-7 Waveform of DA0 output reflection time

Table 7-8 Settling Time and Response Time

Item	Measurement
95% settling time	1.3ms
DA0 pin output response time	20μs

Revision History

Rev.	Date	Description	
		Page	Summary
1.00	Oct.25.23	-	First release

General Precautions in the Handling of Microprocessing Unit and Microcontroller Unit Products

The following usage notes are applicable to all Microprocessing unit and Microcontroller unit products from Renesas. For detailed usage notes on the products covered by this document, refer to the relevant sections of the document as well as any technical updates that have been issued for the products.

1. Precaution against Electrostatic Discharge (ESD)

   A strong electrical field, when exposed to a CMOS device, can cause destruction of the gate oxide and ultimately degrade the device operation. Steps must be taken to stop the generation of static electricity as much as possible, and quickly dissipate it when it occurs. Environmental control must be adequate. When it is dry, a humidifier should be used. This is recommended to avoid using insulators that can easily build up static electricity. Semiconductor devices must be stored and transported in an anti-static container, static shielding bag or conductive material. All test and measurement tools including work benches and floors must be grounded. The operator must also be grounded using a wrist strap. Semiconductor devices must not be touched with bare hands. Similar precautions must be taken for printed circuit boards with mounted semiconductor devices.
2. Processing at power-on

   The state of the product is undefined at the time when power is supplied. The states of internal circuits in the LSI are indeterminate and the states of register settings and pins are undefined at the time when power is supplied. In a finished product where the reset signal is applied to the external reset pin, the states of pins are not guaranteed from the time when power is supplied until the reset process is completed. In a similar way, the states of pins in a product that is reset by an on-chip power-on reset function are not guaranteed from the time when power is supplied until the power reaches the level at which resetting is specified.
3. Input of signal during power-off state

   Do not input signals or an I/O pull-up power supply while the device is powered off. The current injection that results from input of such a signal or I/O pull-up power supply may cause malfunction and the abnormal current that passes in the device at this time may cause degradation of internal elements. Follow the guideline for input signal during power-off state as described in your product documentation.
4. Handling of unused pins

   Handle unused pins in accordance with the directions given under handling of unused pins in the manual. The input pins of CMOS products are generally in the high-impedance state. In operation with an unused pin in the open-circuit state, extra electromagnetic noise is induced in the vicinity of the LSI, an associated shoot-through current flows internally, and malfunctions occur due to the false recognition of the pin state as an input signal become possible.
5. Clock signals

   After applying a reset, only release the reset line after the operating clock signal becomes stable. When switching the clock signal during program execution, wait until the target clock signal is stabilized. When the clock signal is generated with an external resonator or from an external oscillator during a reset, ensure that the reset line is only released after full stabilization of the clock signal. Additionally, when switching to a clock signal produced with an external resonator or by an external oscillator while program execution is in progress, wait until the target clock signal is stable.
6. Voltage application waveform at input pin

   Waveform distortion due to input noise or a reflected wave may cause malfunction. If the input of the CMOS device stays in the area between V_{IL} (Max.) and V_{IH} (Min.) due to noise, for example, the device may malfunction. Take care to prevent chattering noise from entering the device when the input level is fixed, and also in the transition period when the input level passes through the area between V_{IL} (Max.) and V_{IH} (Min.).
7. Prohibition of access to reserved addresses

   Access to reserved addresses is prohibited. The reserved addresses are provided for possible future expansion of functions. Do not access these addresses as the correct operation of the LSI is not guaranteed.
8. Differences between products

   Before changing from one product to another, for example to a product with a different part number, confirm that the change will not lead to problems. The characteristics of a microprocessing unit or microcontroller unit products in the same group but having a different part number might differ in terms of internal memory capacity, layout pattern, and other factors, which can affect the ranges of electrical characteristics, such as characteristic values, operating margins, immunity to noise, and amount of radiated noise. When changing to a product with a different part number, implement a system-evaluation test for the given product.

Notice

1. Descriptions of circuits, software and other related information in this document are provided only to illustrate the operation of semiconductor products and application examples. You are fully responsible for the incorporation or any other use of the circuits, software, and information in the design of your product or system. Renesas Electronics disclaims any and all liability for any losses and damages incurred by you or third parties arising from the use of these circuits, software, or information.
2. Renesas Electronics hereby expressly disclaims any warranties against and liability for infringement or any other claims involving patents, copyrights, or other intellectual property rights of third parties, by or arising from the use of Renesas Electronics products or technical information described in this document, including but not limited to, the product data, drawings, charts, programs, algorithms, and application examples.
3. No license, express, implied or otherwise, is granted hereby under any patents, copyrights or other intellectual property rights of Renesas Electronics or others.
4. You shall be responsible for determining what licenses are required from any third parties, and obtaining such licenses for the lawful import, export, manufacture, sales, utilization, distribution or other disposal of any products incorporating Renesas Electronics products, if required.
5. You shall not alter, modify, copy, or reverse engineer any Renesas Electronics product, whether in whole or in part. Renesas Electronics disclaims any and all liability for any losses or damages incurred by you or third parties arising from such alteration, modification, copying or reverse engineering.
6. Renesas Electronics products are classified according to the following two quality grades: “Standard” and “High Quality.” The intended applications for each Renesas Electronics product depends on the product’s quality grade, as indicated below.
   "Standard": Computers; office equipment; communications equipment; test and measurement equipment; audio and visual equipment; home electronic appliances; machine tools; personal electronic equipment; industrial robots; etc.
   "High Quality": Transportation equipment (automobiles, trains, ships, etc.); traffic control (traffic lights); large-scale communication equipment; key financial terminal systems; safety control equipment; etc.
   Unless expressly designated as a high reliability product or a product for harsh environments in a Renesas Electronics data sheet or other Renesas Electronics document, Renesas Electronics products are not intended or authorized for use in products or systems that may pose a direct threat to human life or bodily injury (artificial life support devices or systems; surgical implantations; etc.), or may cause serious property damage (space system; undersea repeaters; nuclear power control systems; aircraft control systems; key plant systems; military equipment; etc.). Renesas Electronics disclaims any and all liability for any damages or losses incurred by you or any third parties arising from the use of any Renesas Electronics product that is inconsistent with any Renesas Electronics data sheet, user’s manual or other Renesas Electronics document.
7. No semiconductor product is absolutely secure. Notwithstanding any security measures or features that may be implemented in Renesas Electronics hardware or software products, Renesas Electronics shall have absolutely no liability arising out of any vulnerability or security breach, including but not limited to any unauthorized access to or use of a Renesas Electronics product or a system that uses a Renesas Electronics product. RENESAS ELECTRONICS DOES NOT WARRANT OR GUARANTEE THAT RENESAS ELECTRONICS PRODUCTS, OR ANY SYSTEMS CREATED USING RENESAS ELECTRONICS PRODUCTS WILL BE INVULNERABLE OR FREE FROM CORRUPTION, ATTACK, VIRUSES, INTERFERENCE, HACKING, DATA LOSS OR THEFT, OR OTHER SECURITY INTRUSION (“Vulnerability Issues”). RENESAS ELECTRONICS DISCLAIMS ANY AND ALL RESPONSIBILITY OR LIABILITY ARISING FROM OR RELATED TO ANY VULNERABILITY ISSUES. FURTHERMORE, TO THE EXTENT PERMITTED BY APPLICABLE LAW, RENESAS ELECTRONICS DISCLAIMS ANY AND ALL WARRANTIES, EXPRESS OR IMPLIED, WITH RESPECT TO THIS DOCUMENT AND ANY RELATED OR ACCOMPANYING SOFTWARE OR HARDWARE, INCLUDING BUT NOT LIMITED TO THE IMPLIED WARRANTIES OF MERCHANTABILITY, OR FITNESS FOR A PARTICULAR PURPOSE.
8. When using Renesas Electronics products, refer to the latest product information (data sheets, user’s manuals, application notes, “General Notes for Handling and Using Semiconductor Devices” in the reliability handbook, etc.), and ensure that usage conditions are within the ranges specified by Renesas Electronics with respect to maximum ratings, operating power supply voltage range, heat dissipation characteristics, installation, etc. Renesas Electronics disclaims any and all liability for any malfunctions, failure or accident arising out of the use of Renesas Electronics products outside of such specified ranges.
9. Although Renesas Electronics endeavors to improve the quality and reliability of Renesas Electronics products, semiconductor products have specific characteristics, such as the occurrence of failure at a certain rate and malfunctions under certain use conditions. Unless designated as a high reliability product or a product for harsh environments in a Renesas Electronics data sheet or other Renesas Electronics document, Renesas Electronics products are not subject to radiation resistance design. You are responsible for implementing safety measures to guard against the possibility of bodily injury, injury or damage caused by fire, and/or danger to the public in the event of a failure or malfunction of Renesas Electronics products, such as safety design for hardware and software, including but not limited to redundancy, fire control and malfunction prevention, appropriate treatment for aging degradation or any other appropriate measures. Because the evaluation of microcomputer software alone is very difficult and impractical, you are responsible for evaluating the safety of the final products or systems manufactured by you.
10. Please contact a Renesas Electronics sales office for details as to environmental matters such as the environmental compatibility of each Renesas Electronics product. You are responsible for carefully and sufficiently investigating applicable laws and regulations that regulate the inclusion or use of controlled substances, including without limitation, the EU RoHS Directive, and using Renesas Electronics products in compliance with all these applicable laws and regulations. Renesas Electronics disclaims any and all liability for damages or losses occurring as a result of your noncompliance with applicable laws and regulations.
11. Renesas Electronics products and technologies shall not be used for or incorporated into any products or systems whose manufacture, use, or sale is prohibited under any applicable domestic or foreign laws or regulations. You shall comply with any applicable export control laws and regulations promulgated and administered by the governments of any countries asserting jurisdiction over the parties or transactions.
12. It is the responsibility of the buyer or distributor of Renesas Electronics products, or any other party who distributes, disposes of, or otherwise sells or transfers the product to a third party, to notify such third party in advance of the contents and conditions set forth in this document.
13. This document shall not be reprinted, reproduced or duplicated in any form, in whole or in part, without prior written consent of Renesas Electronics.
14. Please contact a Renesas Electronics sales office if you have any questions regarding the information contained in this document or Renesas Electronics products.

(Note1) “Renesas Electronics” as used in this document means Renesas Electronics Corporation and also includes its directly or indirectly controlled subsidiaries.
(Note2) “Renesas Electronics product(s)” means any product developed or manufactured by or for Renesas Electronics.

(Rev.5.0-1 October 2020)

Corporate Headquarters

TOYOSU FORESIA, 3-2-24 Toyosu,
Koto-ku, Tokyo 135-0061, Japan
www.renesas.com

Trademarks

Renesas and the Renesas logo are trademarks of Renesas Electronics Corporation. All trademarks and registered trademarks are the property of their respective owners.

Contact information

For further information on a product, technology, the most up-to-date version of a document, or your nearest sales office, please visit: www.renesas.com/contact/.

© 2023 Renesas Electronics Corporation. All rights reserved.