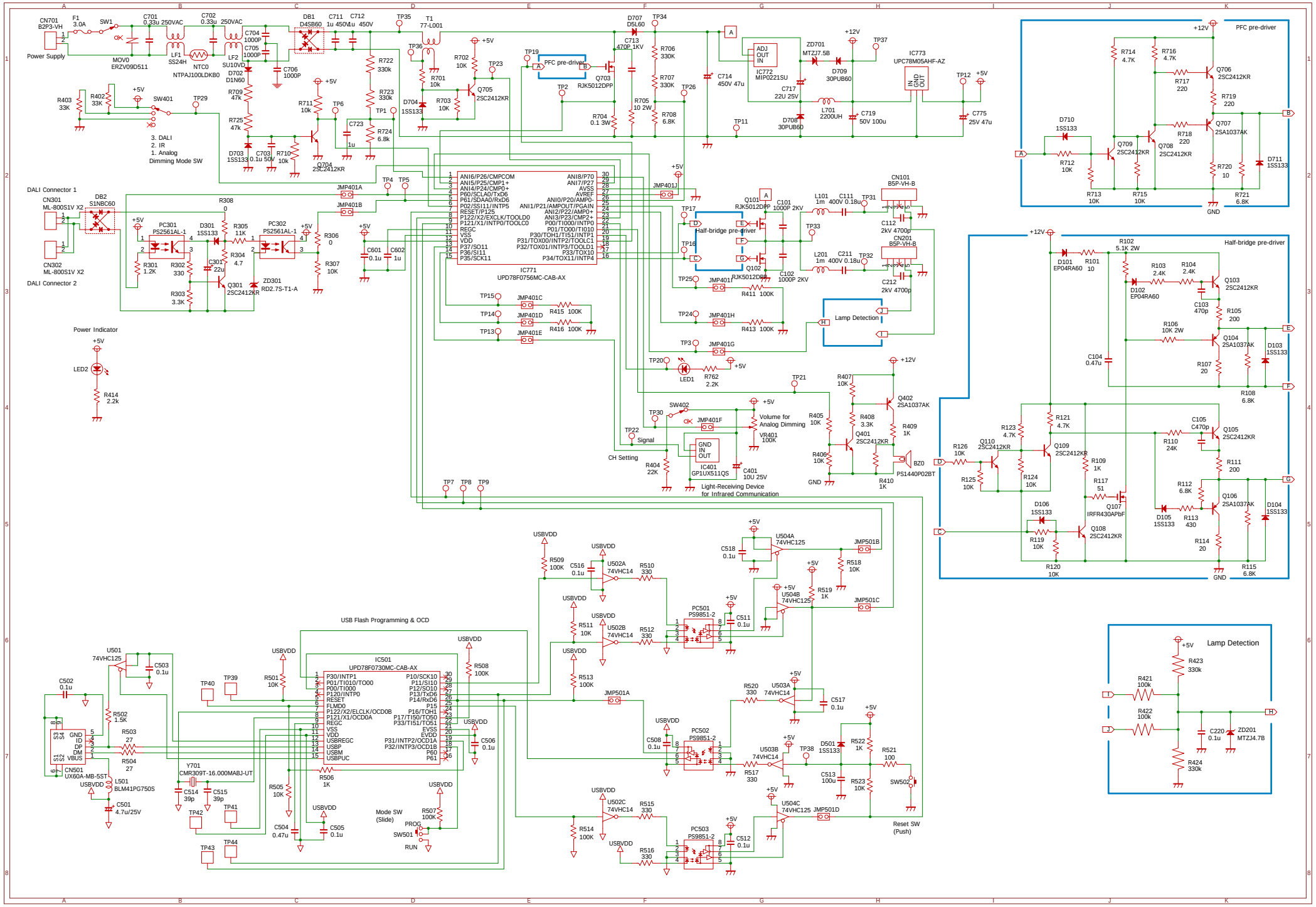
Power Supply
CN701 B2P3-VH
F1 3.0A
SW1
C701 0.33u 250VAC
C702 0.33u 250VAC
MOV0 ERZV09D511
LF1 SS24H
NTC0 NTPAJ100LDKB0
LF2 SU10VD
C704 1000P
C705 1000P
C706 1000P
DB1 D4SB60
C711 1u 450V
C712 1u 450V
TP35
T1 77-L001
TP36
D702 D1N60
R709 47k
R725 47k
D703 1SS133
C703 0.1u 50V
R710 10k
R711 10k
Q704 2SC2412KR
R722 330k
R723 330k
R724 6.8k
C723 1u
TP6
TP1
R701 10k
D704 1SS133
R702 10k
R703 10K
Q705 2SC2412KR
TP23
TP19
PFC pre-driver
Q703 RJK5012DPP
TP2
D707 D5L60
C713 470P 1KV
R704 0.1 3W
R705 10 2W
TP34
R706 330K
R707 330K
R708 6.8K
TP26
C714 450V 47u
TP11
ADJ OUT IN
IC772 MIP0221SU
ZD701 MTZJ7.5B
D709 30PUB60
C717 22U 25V
D708 30PUB60
L701 2200UH
C719 50V 100u
IC773 UPC78M05AHF-AZ
IN GND OUT
TP12
C775 25V 47u
TP37
R403 33K
R402 33K
SW401
TP29
3. DALI
2. IR
1. Analog
Dimming Mode SW
DALI Connector 1
CN301 ML-800S1V X2
DB2 S1NBC60
CN302 ML-800S1V X2
DALI Connector 2
R308 0
PC301 PS2561AL-1
D301 1SS133
R305 11K
R304 4.7
C301 22u
R301 1.2K
R302 330
R303 3.3K
Q301 2SC2412KR
PC302 PS2561AL-1
ZD301 RD2.7S-T1-A
R306 0
R307 10K
JMP401A
JMP401B
TP4
TP5
C601 0.1u
C602 1u
IC771 UPD78F0756MC-CAB-AX
ANI6/P26/CMPCOM
ANI5/P25/CMP1+
ANI4/P24/CMP0+
P60/SCLA0/TxD6
P61/SDAA0/RxD6
P02/SSI111/INTP5
RESET/P125
P122/X2/EXCLK/TOOLD0
P121/X1/INTP0/TOOLC0
REGC
VSS
VDD
P37/SO11
P36/SI11
P35/SCK11
ANI8/P70
ANI7/P27
AVSS
AVREF
ANI0/P20/AMP0-
ANI1/P21/AMPOUT/PGAIN
ANI2/P22/AMP0+
ANI3/P23/CMP2+
P00/TI000/INTP0
P01/TO00/TI010
P30/TOH1/TI51/INTP1
P31/TOX00/INTP2/TOOLC1
P32/TOX01/INTP3/TOOLD1
P33/TOX10
P34/TOX11/INTP4
Half-bridge pre-driver
Q101 RJK5012DPP
Q102 RJK5012DPP
C101 1000P 2KV
C102 1000P 2KV
L101 1m
C111 400V 0.18u
L201 1m
C211 400V 0.18u
CN101 B5P-VH-B
CN201 B5P-VH-B
C112 2kV 4700p
C212 2kV 4700p
TP31
TP32
TP33
TP17
TP16
TP25
JMP401I
R411 100K
TP24
JMP401H
R413 100K
Lamp Detection
TP15
JMP401C
R415 100K
TP14
JMP401D
R416 100K
TP13
JMP401E
TP3
JMP401G
TP20
LED1
R762 2.2K
Power Indicator
LED2
R414 2.2K
TP21
R407 10K
Q402 2SA1037AK
R408 3.3K
R409 1K
R405 10K
Q401 2SC2412KR
R406 10K
R410 1K
BZ0 PS1440P02BT
GND
TP30
SW402
JMP401F
Volume for Analog Dimming
VR401 100K
TP22
Signal
CH Setting
R404 22K
GND IN OUT
IC401 GP1UX511QS
C401 10U 25V
Light-Receiving Device for Infrared Communication
TP7
TP8
TP9
PFC pre-driver
R714 4.7K
R716 4.7K
Q706 2SC2412KR
R717 220
R719 220
Q707 2SA1037AK
R718 220
Q708 2SC2412KR
D710 1SS133
Q709 2SC2412KR
R712 10K
R713 10K
R715 10K
R720 10
D711 1SS133
R721 6.8K
GND
Half-bridge pre-driver
R102 5.1K 2W
D101 EP04RA60
R101 10
R103 2.4K
R104 2.4K
D102 EP04RA60
Q103 2SC2412KR
C103 470p
R105 200
R106 10K 2W
Q104 2SA1037AK
D103 1SS133
C104 0.47u
R107 20
R108 6.8K
R121 4.7K
R123 4.7K
Q110 2SC2412KR
R126 10K
R125 10K
R124 10K
Q109 2SC2412KR
R109 1K
R117 51
Q107 IRFR430APbF
Q108 2SC2412KR
D106 1SS133
R119 10K
R120 10K
C105 C470p
Q105 2SC2412KR
R110 24K
R111 200
R112 6.8K
Q106 2SA1037AK
D104 1SS133
D105 1SS133
R113 430
R114 20
R115 6.8K
GND
USB Flash Programming & OCD
USBVDD
U501 74VHC125
C502 0.1u
C503 0.1u
R502 1.5K
R503 27
R504 27
CN501 UX60A-MB-5ST
L501 BLM41PG750S
C501 4.7u/25V
TP40
TP39
R501 10K
IC501 UPD78F0730MC-CAB-AX
P30/INTP1
P01/TI010/TO00
P00/TI000
P120/INTP0
RESET
FLMD0
P122/X2/ELCLK/OCD0B
P121/X1/OCD0A
REGC
VSS
VDD
USBREGC
USBP
USBM
USBPUC
P10/SCK10
P11/SI10
P12/SO10
P13/TxD6
P14/RxD6
P15
P16/TOH1
P17/TI50/TO50
P33/TI51/TO51
EVSS
EVDD
P31/INTP2/OCD1A
P32/INTP3/OCD1B
P60
P61
R508 100K
C506 0.1u
Y701 CMR309T-16.000MABJ-UT
C514 39p
C515 39p
TP41
TP42
TP43
TP44
R505 10K
C504 0.47u
C505 0.1u
R506 1K
Mode SW (Slide)
PROG
RUN
SW501
R507 100K
R509 100K
C516 0.1u
U502A 74VHC14
R510 330
R511 10K
U502B 74VHC14
R512 330
R513 100K
JMP501A
C508 0.1u
PC501 PS9851-2
PC502 PS9851-2
PC503 PS9851-2
C511 0.1u
C512 0.1u
U502C 74VHC14
R515 330
R514 100K
R516 330
C518 0.1u
U504A 74VHC125
JMP501B
R518 10K
R519 1K
U504B 74VHC125
JMP501C
R520 330
U503A 74VHC14
C517 0.1u
U503B 74VHC14
TP38
R517 330
D501 1SS133
R522 1K
R521 100
C513 100u
R523 10K
SW502
U504C 74VHC125
JMP501D
Reset SW (Push)
Lamp Detection
R423 330k
R421 100k
R422 100k
C220 0.1u
ZD201 MTZJ4.7B
R424 330k