User's Manual

16

RL78/L13

User's Manual: Hardware

16-Bit Single-Chip Microcontrollers

All information contained in these materials, including products and product specifications, represents information on the product at the time of publication and is subject to change by Renesas Electronics Corp. without notice. Please review the latest information published by Renesas Electronics Corp. through various means, including the Renesas Electronics Corp. website (http://www.renesas.com).

Renesas Electronics
www.renesas.com

Rev.2.30 Aug 2023

Notice

1. Descriptions of circuits, software and other related information in this document are provided only to illustrate the operation of semiconductor products and application examples. You are fully responsible for the incorporation or any other use of the circuits, software, and information in the design of your product or system. Renesas Electronics disclaims any and all liability for any losses and damages incurred by you or third parties arising from the use of these circuits, software, or information.
2. Renesas Electronics hereby expressly disclaims any warranties against and liability for infringement or any other claims involving patents, copyrights, or other intellectual property rights of third parties, by or arising from the use of Renesas Electronics products or technical information described in this document, including but not limited to, the product data, drawings, charts, programs, algorithms, and application examples.
3. No license, express, implied or otherwise, is granted hereby under any patents, copyrights or other intellectual property rights of Renesas Electronics or others.
4. You shall be responsible for determining what licenses are required from any third parties, and obtaining such licenses for the lawful import, export, manufacture, sales, utilization, distribution or other disposal of any products incorporating Renesas Electronics products, if required.
5. You shall not alter, modify, copy, or reverse engineer any Renesas Electronics product, whether in whole or in part. Renesas Electronics disclaims any and all liability for any losses or damages incurred by you or third parties arising from such alteration, modification, copying or reverse engineering.
6. Renesas Electronics products are classified according to the following two quality grades: “Standard” and “High Quality”. The intended applications for each Renesas Electronics product depends on the product’s quality grade, as indicated below.
   "Standard": Computers; office equipment; communications equipment; test and measurement equipment; audio and visual equipment; home electronic appliances; machine tools; personal electronic equipment; industrial robots; etc.
   "High Quality": Transportation equipment (automobiles, trains, ships, etc.); traffic control (traffic lights); large-scale communication equipment; key financial terminal systems; safety control equipment; etc.
   Unless expressly designated as a high reliability product or a product for harsh environments in a Renesas Electronics data sheet or other Renesas Electronics document, Renesas Electronics products are not intended or authorized for use in products or systems that may pose a direct threat to human life or bodily injury (artificial life support devices or systems; surgical implantations; etc.), or may cause serious property damage (space system; undersea repeaters; nuclear power control systems; aircraft control systems; key plant systems; military equipment; etc.). Renesas Electronics disclaims any and all liability for any damages or losses incurred by you or any third parties arising from the use of any Renesas Electronics product that is inconsistent with any Renesas Electronics data sheet, user’s manual or other Renesas Electronics document.
7. No semiconductor product is absolutely secure. Notwithstanding any security measures or features that may be implemented in Renesas Electronics hardware or software products, Renesas Electronics shall have absolutely no liability arising out of any vulnerability or security breach, including but not limited to any unauthorized access to or use of a Renesas Electronics product or a system that uses a Renesas Electronics product. RENESAS ELECTRONICS DOES NOT WARRANT OR GUARANTEE THAT RENESAS ELECTRONICS PRODUCTS, OR ANY SYSTEMS CREATED USING RENESAS ELECTRONICS PRODUCTS WILL BE INVULNERABLE OR FREE FROM CORRUPTION, ATTACK, VIRUSES, INTERFERENCE, HACKING, DATA LOSS OR THEFT, OR OTHER SECURITY INTRUSION (“Vulnerability Issues”). RENESAS ELECTRONICS DISCLAIMS ANY AND ALL RESPONSIBILITY OR LIABILITY ARISING FROM OR RELATED TO ANY VULNERABILITY ISSUES. FURTHERMORE, TO THE EXTENT PERMITTED BY APPLICABLE LAW, RENESAS ELECTRONICS DISCLAIMS ANY AND ALL WARRANTIES, EXPRESS OR IMPLIED, WITH RESPECT TO THIS DOCUMENT AND ANY RELATED OR ACCOMPANYING SOFTWARE OR HARDWARE, INCLUDING BUT NOT LIMITED TO THE IMPLIED WARRANTIES OF MERCHANTABILITY, OR FITNESS FOR A PARTICULAR PURPOSE.
8. When using Renesas Electronics products, refer to the latest product information (data sheets, user’s manuals, application notes, “General Notes for Handling and Using Semiconductor Devices” in the reliability handbook, etc.), and ensure that usage conditions are within the ranges specified by Renesas Electronics with respect to maximum ratings, operating power supply voltage range, heat dissipation characteristics, installation, etc. Renesas Electronics disclaims any and all liability for any malfunctions, failure or accident arising out of the use of Renesas Electronics products outside of such specified ranges.
9. Although Renesas Electronics endeavors to improve the quality and reliability of Renesas Electronics products, semiconductor products have specific characteristics, such as the occurrence of failure at a certain rate and malfunctions under certain use conditions. Unless designated as a high reliability product or a product for harsh environments in a Renesas Electronics data sheet or other Renesas Electronics document, Renesas Electronics products are not subject to radiation resistance design. You are responsible for implementing safety measures to guard against the possibility of bodily injury, injury or damage caused by fire, and/or danger to the public in the event of a failure or malfunction of Renesas Electronics products, such as safety design for hardware and software, including but not limited to redundancy, fire control and malfunction prevention, appropriate treatment for aging degradation or any other appropriate measures. Because the evaluation of microcomputer software alone is very difficult and impractical, you are responsible for evaluating the safety of the final products or systems manufactured by you.
10. Please contact a Renesas Electronics sales office for details as to environmental matters such as the environmental compatibility of each Renesas Electronics product. You are responsible for carefully and sufficiently investigating applicable laws and regulations that regulate the inclusion or use of controlled substances, including without limitation, the EU RoHS Directive, and using Renesas Electronics products in compliance with all these applicable laws and regulations. Renesas Electronics disclaims any and all liability for damages or losses occurring as a result of your noncompliance with applicable laws and regulations.
11. Renesas Electronics products and technologies shall not be used for or incorporated into any products or systems whose manufacture, use, or sale is prohibited under any applicable domestic or foreign laws or regulations. You shall comply with any applicable export control laws and regulations promulgated and administered by the governments of any countries asserting jurisdiction over the parties or transactions.
12. It is the responsibility of the buyer or distributor of Renesas Electronics products, or any other party who distributes, disposes of, or otherwise sells or transfers the product to a third party, to notify such third party in advance of the contents and conditions set forth in this document.
13. This document shall not be reprinted, reproduced or duplicated in any form, in whole or in part, without prior written consent of Renesas Electronics.
14. Please contact a Renesas Electronics sales office if you have any questions regarding the information contained in this document or Renesas Electronics products.

(Note1) “Renesas Electronics” as used in this document means Renesas Electronics Corporation and also includes its directly or indirectly controlled subsidiaries.
(Note2) “Renesas Electronics product(s)” means any product developed or manufactured by or for Renesas Electronics.

(Rev.5.0-1 October 2020)

Corporate Headquarters

TOYOSU FORESIA, 3-2-24 Toyosu,
Koto-ku, Tokyo 135-0061, Japan
www.renesas.com

Contact Information

For further information on a product, technology, the most up-to-date version of a document, or your nearest sales office, please visit:
www.renesas.com/contact/

Trademarks

Renesas and the Renesas logo are trademarks of Renesas Electronics Corporation. All trademarks and registered trademarks are the property of their respective owners.

© 2023 Renesas Electronics Corporation. All rights reserved.

General Precautions in the Handling of Microprocessing Unit and Microcontroller Unit Products

The following usage notes are applicable to all Microprocessing unit and Microcontroller unit products from Renesas. For detailed usage notes on the products covered by this document, refer to the relevant sections of the document as well as any technical updates that have been issued for the products.

1. Precaution against Electrostatic Discharge (ESD)
   A strong electrical field, when exposed to a CMOS device, can cause destruction of the gate oxide and ultimately degrade the device operation. Steps must be taken to stop the generation of static electricity as much as possible, and quickly dissipate it when it occurs. Environmental control must be adequate. When it is dry, a humidifier should be used. This is recommended to avoid using insulators that can easily build up static electricity. Semiconductor devices must be stored and transported in an anti-static container, static shielding bag or conductive material. All test and measurement tools including work benches and floors must be grounded. The operator must also be grounded using a wrist strap. Semiconductor devices must not be touched with bare hands. Similar precautions must be taken for printed circuit boards with mounted semiconductor devices.
2. Processing at power-on
   The state of the product is undefined at the time when power is supplied. The states of internal circuits in the LSI are indeterminate and the states of register settings and pins are undefined at the time when power is supplied. In a finished product where the reset signal is applied to the external reset pin, the states of pins are not guaranteed from the time when power is supplied until the reset process is completed. In a similar way, the states of pins in a product that is reset by an on-chip power-on reset function are not guaranteed from the time when power is supplied until the power reaches the level at which resetting is specified.
3. Input of signal during power-off state
   Do not input signals or an I/O pull-up power supply while the device is powered off. The current injection that results from input of such a signal or I/O pull-up power supply may cause malfunction and the abnormal current that passes in the device at this time may cause degradation of internal elements. Follow the guideline for input signal during power-off state as described in your product documentation.
4. Handling of unused pins
   Handle unused pins in accordance with the directions given under handling of unused pins in the manual. The input pins of CMOS products are generally in the high-impedance state. In operation with an unused pin in the open-circuit state, extra electromagnetic noise is induced in the vicinity of the LSI, an associated shoot-through current flows internally, and malfunctions occur due to the false recognition of the pin state as an input signal become possible.
5. Clock signals
   After applying a reset, only release the reset line after the operating clock signal becomes stable. When switching the clock signal during program execution, wait until the target clock signal is stabilized. When the clock signal is generated with an external resonator or from an external oscillator during a reset, ensure that the reset line is only released after full stabilization of the clock signal. Additionally, when switching to a clock signal produced with an external resonator or by an external oscillator while program execution is in progress, wait until the target clock signal is stable.
6. Voltage application waveform at input pin
   Waveform distortion due to input noise or a reflected wave may cause malfunction. If the input of the CMOS device stays in the area between V_{IL} (Max.) and V_{IH} (Min.) due to noise, for example, the device may malfunction. Take care to prevent chattering noise from entering the device when the input level is fixed, and also in the transition period when the input level passes through the area between V_{IL} (Max.) and V_{IH} (Min.).
7. Prohibition of access to reserved addresses
   Access to reserved addresses is prohibited. The reserved addresses are provided for possible future expansion of functions. Do not access these addresses as the correct operation of the LSI is not guaranteed.
8. Differences between products
   Before changing from one product to another, for example to a product with a different part number, confirm that the change will not lead to problems. The characteristics of a microprocessing unit or microcontroller unit products in the same group but having a different part number might differ in terms of internal memory capacity, layout pattern, and other factors, which can affect the ranges of electrical characteristics, such as characteristic values, operating margins, immunity to noise, and amount of radiated noise. When changing to a product with a different part number, implement a system-evaluation test for the given product.

How to Use This Manual

Readers

This manual is intended for user engineers who wish to understand the functions of the RL78/L13 and design and develop application systems and programs for these devices.
The target products are as follows.

- 64-pin: R5F10WLx (x = A, C-G)
- 80-pin: R5F10WMx (x = A, C-G)

Purpose

This manual is intended to give users an understanding of the functions described in the **Organization** below.

Organization

The RL78/L13 manual is separated into two parts: this manual and the software edition (common to the RL78 family).

RL78/L13 User's Manual (This Manual)	**RL78 family User's Manual Software**
● Pin functions ● Internal block functions ● Interrupts ● Other on-chip peripheral functions ● Electrical specifications	● CPU functions ● Instruction set ● Explanation of each instruction

How to Read This Manual

It is assumed that the readers of this manual have general knowledge of electrical engineering, logic circuits, and microcontrollers.

- To gain a general understanding of functions:
  → Read this manual in the order of the **CONTENTS**.
  The mark "<R>" shows major revised points. The revised points can be easily searched by copying an "<R>" in the PDF file and specifying it in the "Find what:" field.
- How to interpret the register format:
  → For a bit number enclosed in angle brackets, the bit name is defined as a reserved word in the assembler, and is defined as an sfr variable using the #pragma sfr directive in the compiler.
- To know details of the RL78/L13 Microcontroller instructions:
  → Refer to the separate document **RL78 family Software User's Manual (R01US0015E)**.

Conventions	Data significance:	Higher digits on the left and lower digits on the right
	Active low representations:	$\overline{\times\times\times}$ (overscore over pin and signal name)
	Note:	Footnote for item marked with **Note** in the text
	Caution:	Information requiring particular attention
	Remark:	Supplementary information
	Numerical representations:	Binary ···×××× or ××××B
		Decimal ···××××
		Hexadecimal ···××××H

Related Documents The related documents indicated in this publication may include preliminary versions. However, preliminary versions are not marked as such.

Documents Related to Devices

Document Name	Document No.
RL78/L13 User's Manual: Hardware	This manual
RL78 Family User's Manual: Software	R01US0015E

Documents Related to Flash Memory Programming

Document Name		Document No.
PG-FP5 Flash Memory Programmer User's Manual		—
	RL78, 78K, V850, RX100, RX200, RX600 (Except RX64x), R8C, SH	R20UT2923E
	Common	R20UT2922E
	Setup Manual	R20UT0930E
PG-FP6 V1.00 Flash Memory Programmer User's Manual		R20UT4025E
E1/E20 Emulator User's Manual		R20UT0398E
E2 Emulator User's Manual		R20UT3538E
E2 emulator Lite User's Manual		R20UT3240E

Caution The related documents listed above are subject to change without notice. Be sure to use the latest version of each document when designing.

Other Documents

Document Name	Document No.
Renesas Microcontrollers RL78 Family	R01CP0003E
Semiconductor Package Mount Manual	R50ZZ0003E
Semiconductor Reliability Handbook	R51ZZ0001E

Caution The related documents listed above are subject to change without notice. Be sure to use the latest version of each document when designing.

All trademarks and registered trademarks are the property of their respective owners.
EEPROM is a trademark of Renesas Electronics Corporation.
SuperFlash is a registered trademark of Silicon Storage Technology, Inc. in several countries including the United States and Japan.

Caution: This product uses SuperFlash® technology licensed from Silicon Storage Technology, Inc.

CONTENTS

CHAPTER 1 OUTLINE **1**

1.1 Features **1**

1.2 List of Part Numbers **4**

1.3 Pin Configuration (Top View) **6**

1.3.1 64-pin products 6

1.3.2 80-pin products 9

1.4 Pin Identification **13**

1.5 Block Diagram **14**

1.5.1 64-pin products 14

1.5.2 80-pin products 15

1.6 Outline of Functions **16**

CHAPTER 2 PIN FUNCTIONS **18**

2.1 Port Function **18**

2.1.1 64-pin products 19

2.1.2 80-pin products 22

2.2 Functions Other than Port Pins **25**

2.2.1 With functions for each product 25

2.2.2 Description of Functions 27

2.3 Connection of Unused Pins **29**

2.4 Block Diagrams of Pins **32**

CHAPTER 3 CPU ARCHITECTURE **48**

3.1 Memory Space **48**

3.1.1 Internal program memory space 57

3.1.2 Mirror area 60

3.1.3 Internal data memory space 62

3.1.4 Special function register (SFR) area 62

3.1.5 Extended special function register (2nd SFR: 2nd Special Function Register) area 62

3.1.6 Data memory addressing 63

3.2 Processor Registers **65**

3.2.1 Control registers 65

3.2.2 General-purpose registers 67

3.2.3 ES and CS registers 68

3.2.4 Special function registers (SFRs) 69

3.2.5 Extended special function registers (2nd SFRs: 2nd Special Function Registers) 75

3.3 Instruction Address Addressing **85**

3.3.1 Relative addressing 85

3.3.2 Immediate addressing 85
3.3.3 Table indirect addressing 86
3.3.4 Register indirect addressing 87
3.4 Addressing for Processing Data Addresses 88
3.4.1 Implied addressing 88
3.4.2 Register addressing 88
3.4.3 Direct addressing 89
3.4.4 Short direct addressing 90
3.4.5 SFR addressing 91
3.4.6 Register indirect addressing 92
3.4.7 Based addressing 93
3.4.8 Based indexed addressing 97
3.4.9 Stack addressing 98

CHAPTER 4 PORT FUNCTIONS 102
4.1 Port Functions 102
4.2 Port Configuration 102
4.2.1 Port 0 103
4.2.2 Port 1 103
4.2.3 Port 2 104
4.2.4 Port 3 104
4.2.5 Port 4 105
4.2.6 Port 5 105
4.2.7 Port 6 105
4.2.8 Port 7 106
4.2.9 Port 12 106
4.2.10 Port 13 106
4.3 Registers Controlling Port Function 107
4.3.1 Port mode registers (PMxx) 111
4.3.2 Port registers (Pxx) 112
4.3.3 Pull-up resistor option registers (PUxx) 113
4.3.4 Port input mode registers (PIMxx) 114
4.3.5 Port output mode registers (POMxx) 115
4.3.6 Port mode control registers (PMCxx) 116
4.3.7 A/D port configuration register (ADPC) 117
4.3.8 Peripheral I/O redirection register (PIOR) 118
4.3.9 LCD port function registers 0 to 6 (PFSEG0 to PFSEG6) 119
4.3.10 LCD input switch control register (ISCLCD) 122
4.4 Port Function Operations 123
4.4.1 Writing to I/O port 123
4.4.2 Reading from I/O port 123

4.4.3 Operations on I/O port 123
4.4.4 Handling different potential (1.8 V, 2.5 V, 3 V) by using I/O buffers 124
4.5 Register Settings When Using Alternate Function 126
4.5.1 Basic concept when using alternate function 126
4.5.2 Register settings for alternate function whose output function is not used 127
4.5.3 Register setting examples for used port and alternate functions 129
4.5.4 Operation of ports that alternately function as SEGxx pins 143
4.5.5 Operation of ports that alternately function as VL3, CAPL, and CAPH pins 145
4.5.6 P45 (port that serves as an analog input pin (IVREF0)) 147
4.6 Cautions When Using Port Function 148
4.6.1 Cautions on 1-bit manipulation instruction for port register n (Pn) 148
4.6.2 Notes on specifying the pin settings 149

CHAPTER 5 CLOCK GENERATOR 150
5.1 Functions of Clock Generator 150
5.2 Configuration of Clock Generator 152
5.3 Registers Controlling Clock Generator 154
5.3.1 Clock operation mode control register (CMC) 154
5.3.2 System clock control register (CKC) 157
5.3.3 Clock operation status control register (CSC) 159
5.3.4 Oscillation stabilization time counter status register (OSTC) 160
5.3.5 Oscillation stabilization time select register (OSTS) 162
5.3.6 Peripheral enable registers 0 and 1 (PER0, PER1) 164
5.3.7 Subsystem clock supply mode control register (OSMC) 167
5.3.8 High-speed on-chip oscillator frequency select register (HOCODIV) 168
5.3.9 High-speed on-chip oscillator trimming register (HIOTRM) 169
5.4 System Clock Oscillator 170
5.4.1 X1 oscillator 170
5.4.2 XT1 oscillator 170
5.4.3 High-speed on-chip oscillator 174
5.4.4 Low-speed on-chip oscillator 174
5.5 Clock Generator Operation 175
5.6 Controlling Clock 177
5.6.1 Example of setting high-speed on-chip oscillator 177
5.6.2 Example of setting X1 oscillation clock 179
5.6.3 Example of setting XT1 oscillation clock 180
5.6.4 CPU clock status transition diagram 181
5.6.5 Conditions before changing the CPU clock and processing after changing CPU clock 187
5.6.6 Time required for switching CPU clock and system clock 189
5.6.7 Conditions before stopping clock oscillation 190
5.7 Resonator and Oscillator Constants 191

CHAPTER 6 TIMER ARRAY UNIT **192**

6.1 Functions of Timer Array Unit **193**

6.1.1 Independent channel operation function 193

6.1.2 Simultaneous channel operation function 194

6.1.3 8-bit timer operation function (channels 1 and 3 only) 195

6.1.4 LIN-bus supporting function (channel 7 only) 196

6.2 Configuration of Timer Array Unit **197**

6.2.1 Timer count register mn (TCRmn) 203

6.2.2 Timer data register mn (TDRmn) 204

6.3 Registers Controlling Timer Array Unit **205**

6.3.1 Peripheral enable register 0 (PER0) 206

6.3.2 Timer clock select register m (TPSm) 207

6.3.3 Timer mode register mn (TMRmn) 210

6.3.4 Timer status register mn (TSRmn) 215

6.3.5 Timer channel enable status register m (TEm) 216

6.3.6 Timer channel start register m (TSm) 217

6.3.7 Timer channel stop register m (TTm) 218

6.3.8 Timer input select register 0 (TIS0) 219

6.3.9 Timer output select register (TOS) 219

6.3.10 Timer output enable register m (TOEm) 220

6.3.11 Timer output register m (TOm) 221

6.3.12 Timer output level register m (TOLm) 222

6.3.13 Timer output mode register m (TOMm) 223

6.3.14 Input switch control register (ISC) 224

6.3.15 Noise filter enable register 1 (NFEN1) 225

6.3.16 Registers controlling port functions of pins to be used for timer I/O 227

6.4 Basic Rules of Timer Array Unit **228**

6.4.1 Basic rules of simultaneous channel operation function 228

6.4.2 Basic rules of 8-bit timer operation function (channels 1 and 3 only) 230

6.5 Operation of Counter **231**

6.5.1 Count clock (fTCLK) 231

6.5.2 Start timing of counter 233

6.5.3 Operation of counter 234

6.6 Channel Output (TOmn pin) Control **239**

6.6.1 TOmn pin output circuit configuration 239

6.6.2 TOmn pin output setting 240

6.6.3 Cautions on channel output operation 241

6.6.4 Collective manipulation of TOmn bit 246

6.6.5 Timer interrupt and TOmn pin output at operation start 247

6.7 Timer Input (TImn) Control **248**

6.7.1 TImn input circuit configuration 248

6.7.2 Noise filter 248
6.7.3 Cautions on channel input operation 249
6.8 Independent Channel Operation Function of Timer Array Unit 250
6.8.1 Operation as interval timer/square wave output 250
6.8.2 Operation as external event counter 256
6.8.3 Operation as input pulse interval measurement 261
6.8.4 Operation as input signal high-/low-level width measurement 265
6.8.5 Operation as delay counter 269
6.9 Simultaneous Channel Operation Function of Timer Array Unit 274
6.9.1 Operation as one-shot pulse output function 274
6.9.2 Operation as PWM function 281
6.9.3 Operation as multiple PWM output function 288
6.9.4 Remote control output function 296
6.10 Cautions When Using Timer Array Unit 299
6.10.1 Cautions when using timer output 299

CHAPTER 7 16-BIT TIMER KB20 300
7.1 Functions of 16-bit Timer KB20 300
7.2 Configuration of 16-bit Timer KB20 301
7.2.1 16-bit timer KB2 compare registers 00 to 03 (TKBCR00 to TKBCR03) 303
7.3 Registers Controlling 16-bit Timer KB20 304
7.3.1 Peripheral enable register (PER1) 305
7.3.2 Timer clock select register (TKBPSCS0) 306
7.3.3 16-bit timer KB2 operation control register 00 (TKBCTL00) 307
7.3.4 16-bit timer KB2 operation control register 01 (TKBCTL01) 309
7.3.5 16-bit timer KB2 output control register 00 (TKBIOC00) 310
7.3.6 16-bit timer KB2 output control register 01 (TKBIOC01) 311
7.3.7 16-bit timer KB2 flag register 0 (TKBFLG0) 312
7.3.8 16-bit timer KB2 trigger register 0 (TKBTRG0) 313
7.3.9 16-bit timer KB2 flag clear trigger register 0 (TKBCLR0) 314
7.3.10 16-bit timer KB2 dithering count registers 00, 01 (TKBDNR00, TKBDNR01) 315
7.3.11 16-bit timer KB2 compare 1L & dithering count register 00 (TKBCRLD00) 316
7.3.12 16-bit timer KB2 compare 3L & dithering count register 01 (TKBCRLD01) 316
7.3.13 16-bit timer KB2 smooth start initial duty registers 00, 01 (TKBSIR00, TKBSIR01) 317
7.3.14 16-bit timer KB2 smooth start step width registers 00, 01 (TKBSSR00, TKBSSR01) 317
7.3.15 16-bit timer KB2 maximum frequency limit setting register 0 (TKBMFR0) 318
7.3.16 16-bit timer KB2 counter restart select register (ELSELRn) 319
7.3.17 16-bit timer KB2 output switch register (PWCTKB) 320
7.3.18 Forced output stop function control register 0 (TKBPACTL00) 321
7.3.19 Forced output stop function control register 1 (TKBPACTL01) 323
7.3.20 Forced output stop function control register 2 (TKBPACTL02) 326

7.3.21 Forced output stop function flag register (TKBPAFLG0) 327
7.3.22 Forced output stop function 1 start register (TKBPAHFS0) 328
7.3.23 Forced output stop function 1 stop register (TKBPAHFT0) 329
7.3.24 Registers controlling port functions of 16-bit timer KB2 output pins 330
7.4 Operation of 16-bit Timer KB20 331
7.4.1 Counter basic operation 331
7.4.2 Default level and active level 332
7.4.3 Stop/restart operation 336
7.4.4 Batch overwrite operation 339
7.4.5 Standalone mode (period controlled by TKBCR00) 340
7.4.6 Standalone mode (period controlled by external trigger input) 346
7.4.7 Interleave PFC (Power Factor Correction) output mode 353
7.5 Option Functions of 16-bit Timer KB20 366
7.5.1 PWM output dithering function 366
7.5.2 PWM output smooth start function 370
7.5.3 Maximum frequency limit function 373
7.5.4 PWM output function for IH control 374
7.6 Forced Output Stop Function 377
7.6.1 Forced output stop functions 1 and 2 378
7.7 Operation of Forced Output Stop Function 1 380
7.7.1 I/O setting for forced output stop function 1 380
7.7.2 Basic operation of forced output stop function 1 383
7.7.3 Notes on using forced output stop function 1 387
7.8 Operation of Forced Output Stop Function 2 388
7.8.1 I/O setting for forced output stop function 2 388
7.8.2 Basic operation of forced output stop function 2 390
7.9 Cautions When Using 16-bit Timer KB20 391
7.9.1 Using 16-bit timer KB20 together with the LIN-bus functions 391
7.9.2 Cautions when using the counter restart trigger 391
7.9.3 Cautions when using the forced output stop function
(when not using the PWM output function for IH control) 391
7.9.4 Cautions when using the PWM output function for IH control 392

CHAPTER 8 REAL-TIME CLOCK 2 393

8.1 Functions of Real-time Clock 2 393
8.2 Configuration of Real-time Clock 2 393
8.3 Registers Controlling Real-time Clock 2 395
8.3.1 Peripheral enable register 0 (PER0) 396
8.3.2 Subsystem clock supply mode control register (OSMC) 397
8.3.3 Power-on-reset status register (PORSR) 398
8.3.4 Real-time clock control register 0 (RTCC0) 399

8.3.5 Real-time clock control register 1 (RTCC1) 401
8.3.6 Second count register (SEC) 404
8.3.7 Minute count register (MIN) 404
8.3.8 Hour count register (HOUR) 405
8.3.9 Date count register (DAY) 407
8.3.10 Day-of-week count register (WEEK) 408
8.3.11 Month count register (MONTH) 409
8.3.12 Year count register (YEAR) 409
8.3.13 Clock error correction register (SUBCUD) 410
8.3.14 Alarm minute register (ALARMWM) 413
8.3.15 Alarm hour register (ALARMWH) 413
8.3.16 Alarm day-of-week register (ALARMWW) 414
8.3.17 Registers controlling port functions of real-time clock 2 output pins 415
8.4 Real-time Clock 2 Operation 416
8.4.1 Starting operation of real-time clock 2 416
8.4.2 Shifting to HALT/STOP mode after starting operation 417
8.4.3 Reading real-time clock 2 counter 418
8.4.4 Writing to real-time clock 2 counter 420
8.4.5 Setting alarm of real-time clock 2 423
8.4.6 1 Hz output of real-time clock 2 424
8.4.7 Clock error correction register setting procedure 425
8.4.8 Example of watch error correction of real-time clock 2 426

CHAPTER 9 12-BIT INTERVAL TIMER 428

9.1 Functions of 12-bit Interval Timer 428
9.2 Configuration of 12-bit Interval Timer 428
9.3 Registers Controlling 12-bit Interval Timer 429
9.3.1 Peripheral enable register 1 (PER1) 429
9.3.2 Subsystem clock supply mode control register (OSMC) 430
9.3.3 12-bit interval timer control register (ITMC) 431
9.4 12-bit Interval Timer Operation 432
9.4.1 12-bit interval timer operation timing 432
9.4.2 Start of count operation and re-enter to HALT/STOP mode after returned from HALT/STOP mode 433

CHAPTER 10 CLOCK OUTPUT/BUZZER OUTPUT CONTROLLER 434

10.1 Functions of Clock Output/Buzzer Output Controller 434
10.2 Configuration of Clock Output/Buzzer Output Controller 436
10.3 Registers Controlling Clock Output/Buzzer Output Controller 436
10.3.1 Clock output select register n (CKSn) 436
10.3.2 Subsystem clock supply mode control register (OSMC) 438

10.4 Operations of Clock Output/Buzzer Output Controller 440
10.4.1 Operation as output pin 440
10.5 Cautions of Clock Output/Buzzer Output Controller 440

CHAPTER 11 WATCHDOG TIMER 441

11.1 Functions of Watchdog Timer 441
11.2 Configuration of Watchdog Timer 442
11.3 Register Controlling Watchdog Timer 443
11.3.1 Watchdog timer enable register (WDTE) 443
11.4 Operation of Watchdog Timer 444
11.4.1 Controlling operation of watchdog timer 444
11.4.2 Setting overflow time of watchdog timer 445
11.4.3 Setting window open period of watchdog timer 446
11.4.4 Setting watchdog timer interval interrupt 448

CHAPTER 12 A/D CONVERTER 449

12.1 Function of A/D Converter 449
12.2 Configuration of A/D Converter 451
12.3 Registers Used in A/D Converter 453
12.3.1 Peripheral enable register 0 (PER0) 454
12.3.2 A/D converter mode register 0 (ADM0) 455
12.3.3 A/D converter mode register 1 (ADM1) 464
12.3.4 A/D converter mode register 2 (ADM2) 465
12.3.5 10-bit A/D conversion result register (ADCR) 467
12.3.6 8-bit A/D conversion result register (ADCRH) 468
12.3.7 Analog input channel specification register (ADS) 469
12.3.8 Conversion result comparison upper limit setting register (ADUL) 470
12.3.9 Conversion result comparison lower limit setting register (ADLL) 470
12.3.10 A/D test register (ADTES) 471
12.3.11 Registers controlling port function of analog input pins 471
12.4 A/D Converter Conversion Operations 472
12.5 Input Voltage and Conversion Results 474
12.6 A/D Converter Operation Modes 475
12.6.1 Software trigger mode (sequential conversion mode) 475
12.6.2 Software trigger mode (one-shot conversion mode) 476
12.6.3 Hardware trigger no-wait mode (sequential conversion mode) 477
12.6.4 Hardware trigger no-wait mode (one-shot conversion mode) 478
12.6.5 Hardware trigger wait mode (sequential conversion mode) 479
12.6.6 Hardware trigger wait mode (one-shot conversion mode) 480
12.7 A/D Converter Setup Flowchart 481
12.7.1 Setting up software trigger mode 481

12.7.2 Setting up hardware trigger no-wait mode 482
12.7.3 Setting up hardware trigger wait mode 483
12.7.4 Setup when using temperature sensor (example for software trigger mode and one-shot conversion mode) 484
12.7.5 Setting up test mode 485
12.8 SNOOZE Mode Function 486
12.9 How to Read A/D Converter Characteristics Table 489
12.10 Cautions for A/D Converter 491

CHAPTER 13 COMPARATOR 495

13.1 Functions of Comparator 495
13.2 Configuration of Comparator 496
13.3 Registers Controlling Comparator 497
13.3.1 Peripheral enable register 1 (PER1) 497
13.3.2 Comparator mode setting register (COMPMDR) 498
13.3.3 Comparator filter control register (COMPFIR) 500
13.3.4 Comparator output control register (COMPOCR) 501
13.3.5 Registers controlling port functions of analog input pins 502
13.4 Operation 503
13.4.1 Comparator i digital filter (i = 0 or 1) 505
13.4.2 Comparator i (i = 0 or 1) interrupts 505
13.4.3 Comparator i output (i = 0 or 1) 506
13.4.4 Stopping or supplying comparator clock 506

CHAPTER 14 SERIAL ARRAY UNIT 507

14.1 Functions of Serial Array Unit 508
14.1.1 Simplified SPI (CSI00, CSI10) 508
14.1.2 UART (UART0 to UART3) 509
14.1.3 Simplified I^2C (IIC00, IIC10) 510
14.2 Configuration of Serial Array Unit 511
14.2.1 Shift register 514
14.2.2 Lower 8/9 bits of the serial data register mn (SDRmn) 514
14.3 Registers Controlling Serial Array Unit 516
14.3.1 Peripheral enable register 0 (PER0) 517
14.3.2 Serial clock select register m (SPSm) 518
14.3.3 Serial mode register mn (SMRmn) 519
14.3.4 Serial communication operation setting register mn (SCRmn) 520
14.3.5 Serial data register mn (SDRmn) 523
14.3.6 Serial flag clear trigger register mn (SIRmn) 525
14.3.7 Serial status register mn (SSRmn) 526
14.3.8 Serial channel start register m (SSm) 528

14.3.9 Serial channel stop register m (STm) 529
14.3.10 Serial channel enable status register m (SEm) 530
14.3.11 Serial output enable register m (SOEm) 531
14.3.12 Serial output register m (SOm) 532
14.3.13 Serial output level register m (SOLm) 533
14.3.14 Serial standby control register m (SSCm) 535
14.3.15 Input switch control register (ISC) 536
14.3.16 Noise filter enable register 0 (NFEN0) 537
14.3.17 Registers controlling port functions of serial I/O pins 538
14.4 Operation Stop Mode 539
14.4.1 Stopping the operation by units 539
14.4.2 Stopping the operation by channels 540
14.5 Operation of Simplified SPI (CSI00, CSI10) Communication 541
14.5.1 Master transmission 543
14.5.2 Master reception 553
14.5.3 Master transmission/reception 562
14.5.4 Slave transmission 572
14.5.5 Slave reception 582
14.5.6 Slave transmission/reception 589
14.5.7 SNOOZE mode function 599
14.5.8 Calculating transfer clock frequency 603
14.5.9 Procedure for processing errors that occurred during Simplified SPI (CSI00, CSI10) communication 605
14.6 Operation of UART (UART0 to UART3) Communication 606
14.6.1 UART transmission 608
14.6.2 UART reception 618
14.6.3 SNOOZE mode function 625
14.6.4 Calculating baud rate 633
14.6.5 Procedure for processing errors that occurred during UART (UART0 to UART3) communication 637
14.7 LIN Communication Operation 638
14.7.1 LIN transmission 638
14.7.2 LIN reception 641
14.8 Operation of Simplified I^{2}C (IIC00, IIC10) Communication 646
14.8.1 Address field transmission 648
14.8.2 Data transmission 654
14.8.3 Data reception 658
14.8.4 Stop condition generation 663
14.8.5 Calculating transfer rate 664
14.8.6 Procedure for processing errors that occurred during simplified I^{2}C (IIC00, IIC10) communication 666

CHAPTER 15 SERIAL INTERFACE IICA **667**

15.1 Functions of Serial Interface IICA **667**
15.2 Configuration of Serial Interface IICA **670**
15.3 Registers Controlling Serial Interface IICA **673**
15.3.1 Peripheral enable register 0 (PER0) 673
15.3.2 IICA control register n0 (IICCTLn0) 674
15.3.3 IICA status register n (IICSn) 679
15.3.4 IICA flag register n (IICFn) 681
15.3.5 IICA control register n1 (IICCTLn1) 683
15.3.6 IICA low-level width setting register n (IICWLn) 685
15.3.7 IICA high-level width setting register n (IICWHn) 685
15.3.8 Port mode register 6 (PM6) 686
15.4 I^2C Bus Mode Functions **687**
15.4.1 Pin configuration 687
15.4.2 Setting transfer clock by using IICWLn and IICWHn registers 688
15.5 I^2C Bus Definitions and Control Methods **690**
15.5.1 Start conditions 690
15.5.2 Addresses 691
15.5.3 Transfer direction specification 691
15.5.4 Acknowledge (ACK) 692
15.5.5 Stop condition 693
15.5.6 Clock stretching 694
15.5.7 Canceling clock stretching 696
15.5.8 Interrupt request (INTIICAn) generation timing and clock stretching control 697
15.5.9 Address match detection method 698
15.5.10 Error detection 698
15.5.11 Extension code 698
15.5.12 Arbitration 699
15.5.13 Wakeup function 701
15.5.14 Communication reservation 704
15.5.15 Cautions 708
15.5.16 Communication operations 709
15.5.17 Timing of I^2C interrupt request (INTIICAn) occurrence 716
15.6 Timing Charts **737**

CHAPTER 16 LCD CONTROLLER/DRIVER **752**

16.1 Functions of LCD Controller/Driver **753**
16.2 Configuration of LCD Controller/Driver **755**
16.3 Registers Controlling LCD Controller/Driver **757**
16.3.1 LCD mode register 0 (LCDM0) 758

16.3.2 LCD mode register 1 (LCDM1) ... 760
16.3.3 Subsystem clock supply mode control register (OSMC) ... 762
16.3.4 LCD clock control register 0 (LCDC0) ... 763
16.3.5 LCD boost level control register (VLCD) ... 764
16.3.6 LCD input switch control register (ISCLCD) ... 765
16.3.7 LCD port function registers 0 to 6 (PFSEG0 to PFSEG6) ... 767
16.3.8 Port mode registers 0 to 5, 7, 13 (PM0 to PM5, PM7, PM13) ... 772
16.4 LCD Display Data Registers ... 773
16.5 Selection of LCD Display Register ... 777
16.5.1 A-pattern area and B-pattern area data display ... 778
16.5.2 Blinking display (Alternately displaying A-pattern and B-pattern area data) ... 778
16.6 Setting the LCD Controller/Driver ... 779
16.7 Operation Stop Procedure ... 782
16.8 Supplying LCD Drive Voltages VL1, VL2, VL3, and VL4 ... 783
16.8.1 External resistance division method ... 783
16.8.2 Internal voltage boosting method ... 785
16.8.3 Capacitor split method ... 786
16.9 Common and Segment Signals ... 787
16.10 Display Modes ... 795
16.10.1 Static display example ... 795
16.10.2 Two-time-slice display example ... 798
16.10.3 Three-time-slice display example ... 801
16.10.4 Four-time-slice display example ... 805
16.10.5 Eight-time-slice display example ... 809

CHAPTER 17 MULTIPLIER AND DIVIDER/MULTIPLY-ACCUMULATOR ... 813

17.1 Functions of Multiplier and Divider/Multiply-Accumulator ... 813
17.2 Configuration of Multiplier and Divider/Multiply-Accumulator ... 813
17.2.1 Multiplication/division data register A (MDAH, MDAL) ... 815
17.2.2 Multiplication/division data register B (MDBL, MDBH) ... 816
17.2.3 Multiplication/division data register C (MDCL, MDCH) ... 817
17.3 Register Controlling Multiplier and Divider/Multiply-Accumulator ... 819
17.3.1 Multiplication/division control register (MDUC) ... 819
17.4 Operations of Multiplier and Divider/Multiply-Accumulator ... 821
17.4.1 Multiplication (unsigned) operation ... 821
17.4.2 Multiplication (signed) operation ... 822
17.4.3 Multiply-accumulation (unsigned) operation ... 823
17.4.4 Multiply-accumulation (signed) operation ... 825
17.4.5 Division operation ... 827

CHAPTER 18 DMA CONTROLLER ... 829

18.1 Functions of DMA Controller 829
18.2 Configuration of DMA Controller 830
18.2.1 DMA SFR address register n (DSAn) 830
18.2.2 DMA RAM address register n (DRAn) 831
18.2.3 DMA byte count register n (DBCn) 832
18.3 Registers Controlling DMA Controller 833
18.3.1 DMA mode control register n (DMCn) 834
18.3.2 DMA operation control register n (DRCn) 837
18.4 Operation of DMA Controller 838
18.4.1 Operation procedure 838
18.4.2 Transfer mode 839
18.4.3 Termination of DMA transfer 839
18.5 Example of Setting of DMA Controller 840
18.5.1 Simplified SPI (CSI) consecutive transmission 840
18.5.2 Consecutive capturing of A/D conversion results 842
18.5.3 UART consecutive reception + ACK transmission 844
18.5.4 Holding DMA transfer pending by DWAITn bit 845
18.5.5 Forced termination by software 846
18.6 Cautions on Using DMA Controller 848

CHAPTER 19 INTERRUPT FUNCTIONS 851

19.1 Interrupt Function Types 851
19.2 Interrupt Sources and Configuration 851
19.3 Registers Controlling Interrupt Functions 857
19.3.1 Interrupt request flag registers (IF0L, IF0H, IF1L, IF1H, IF2L, IF2H, IF3L) 860
19.3.2 Interrupt mask flag registers (MK0L, MK0H, MK1L, MK1H, MK2L, MK2H, MK3L) 861
19.3.3 Priority specification flag registers (PR00L, PR00H, PR01L, PR01H, PR02L, PR02H, PR03L, PR10L, PR10H, PR11L, PR11H, PR12L, PR12H, PR13L) 863
19.3.4 External interrupt rising edge enable register (EGP0), external interrupt falling edge enable register (EGN0) 865
19.3.5 Program status word (PSW) 866
19.4 Interrupt Servicing Operations 867
19.4.1 Maskable interrupt request acknowledgment 867
19.4.2 Software interrupt request acknowledgment 870
19.4.3 Multiple interrupt servicing 870
19.4.4 Interrupt request hold 874

CHAPTER 20 KEY INTERRUPT FUNCTION 875

20.1 Functions of Key Interrupt 875
20.2 Configuration of Key Interrupt 876
20.3 Register Controlling Key Interrupt 877

20.3.1 Key return control register (KRCTL) 877
20.3.2 Key return mode register (KRM0) 878
20.3.3 Key return flag register (KRF) 879
20.3.4 Port mode register 7 (PM7) 879

CHAPTER 21 STANDBY FUNCTION 880

21.1 Standby Function 880
21.2 Registers Controlling Standby Function 881
21.3 Standby Function Operation 881
21.3.1 HALT mode 881
21.3.2 STOP mode 887
21.3.3 SNOOZE mode 893

CHAPTER 22 RESET FUNCTION 896

22.1 Timing of Reset Operation 898
22.2 States of Operation During Reset Periods 900
22.3 Register for Confirming Reset Source 902
22.3.1 Reset control flag register (RESF) 902
22.3.2 Power-on-reset status register (PORSR) 903

CHAPTER 23 POWER-ON-RESET CIRCUIT 905

23.1 Functions of Power-on-reset Circuit 905
23.2 Configuration of Power-on-reset Circuit 906
23.3 Operation of Power-on-reset Circuit 906

CHAPTER 24 VOLTAGE DETECTOR 910

24.1 Functions of Voltage Detector 910
24.2 Configuration of Voltage Detector 911
24.3 Registers Controlling Voltage Detector 911
24.3.1 Voltage detection register (LVIM) 912
24.3.2 Voltage detection level register (LVIS) 913
24.4 Operation of Voltage Detector 916
24.4.1 When used as reset mode 916
24.4.2 When used as interrupt mode 918
24.4.3 When used as interrupt and reset mode 920
24.5 Cautions for Voltage Detector 926

CHAPTER 25 SAFETY FUNCTIONS 928

25.1 Overview of Safety Functions 928
25.2 Registers Used by Safety Functions 929

25.3 Operation of Safety Functions 929
25.3.1 Flash memory CRC operation function (high-speed CRC) 929
25.3.1.1 Flash memory CRC control register (CRC0CTL) 930
25.3.1.2 Flash memory CRC operation result register (PGCRCL) 931
25.3.2 CRC operation function (general-purpose CRC) 933
25.3.2.1 CRC input register (CRCIN) 933
25.3.2.2 CRC data register (CRCD) 934
25.3.3 RAM parity error detection function 935
25.3.3.1 RAM parity error control register (RPECTL) 935
25.3.4 RAM guard function 936
25.3.4.1 Invalid memory access detection control register (IAWCTL) 936
25.3.5 SFR guard function 937
25.3.5.1 Invalid memory access detection control register (IAWCTL) 937
25.3.6 Invalid memory access detection function 938
25.3.6.1 Invalid memory access detection control register (IAWCTL) 939
25.3.7 Frequency detection function 940
25.3.7.1 Timer input select register 0 (TIS0) 941
25.3.8 A/D test function 942
25.3.8.1 A/D test register (ADTES) 943
25.3.8.2 Analog input channel specification register (ADS) 943
25.3.9 Digital output signal level detection function for I/O pins 945
25.3.9.1 Port mode select register (PMS) 945

CHAPTER 26 REGULATOR 946

26.1 Regulator Overview 946

CHAPTER 27 OPTION BYTE 947

27.1 Functions of Option Bytes 947
27.1.1 User option byte (000C0H to 000C2H/010C0H to 010C2H) 947
27.1.2 On-chip debug option byte (000C3H/ 010C3H) 948
27.2 Format of User Option Byte 949
27.3 Format of On-chip Debug Option Byte 954
27.4 Setting of Option Byte 955

CHAPTER 28 FLASH MEMORY 956

28.1 Serial Programming Using Flash Memory Programmer 958
28.1.1 Programming environment 960
28.1.2 Communication mode 960
28.2 Serial Programming Using External Device (that Incorporates UART) 961
28.2.1 Programming environment 961

28.2.2 Communication mode 962
28.3 Connection of Pins on Board 963
28.3.1 P40/TOOL0 pin 963
28.3.2 $\overline{\text{RESET}}$ pin 963
28.3.3 Port pins 964
28.3.4 REGC pin 964
28.3.5 X1 and X2 pins 964
28.3.6 Power supply 964
28.4 Serial Programming Method 965
28.4.1 Controlling serial programming 965
28.4.2 Flash memory programming mode 966
28.4.3 Selecting communication mode 967
28.4.4 Communication commands 968
28.5 Processing Time for Each Command When Dedicated Flash Memory Programmer Is in Use (Reference Value) 970
28.6 Self-Programming 971
28.6.1 Self-programming procedure 972
28.6.2 Boot swap function 973
28.6.3 Flash shield window function 975
28.7 Security Settings 976
28.8 Data Flash 978
28.8.1 Data flash overview 978
28.8.2 Register controlling data flash memory 979
28.8.2.1 Data flash control register (DFLCTL) 979
28.8.3 Procedure for accessing data flash memory 980

CHAPTER 29 ON-CHIP DEBUGGING 982

29.1 Connection between the E1, E2, E2 Lite, or E20 On-chip Debugging Emulator and RL78/L13 982
29.2 On-Chip Debug Security ID 983
29.3 Allocation of Memory Spaces to User Resources 983

CHAPTER 30 BCD CORRECTION CIRCUIT 985

30.1 BCD Correction Circuit Function 985
30.2 Registers Used by BCD Correction Circuit 985
30.2.1 BCD correction result register (BCDADJ) 985
30.3 BCD Correction Circuit Operation 986

CHAPTER 31 INSTRUCTION SET 988

31.1 Conventions Used in Operation List 989

31.1.1 Operand identifiers and specification methods 989
31.1.2 Description of operation column 990
31.1.3 Description of flag operation column 991
31.1.4 PREFIX instruction 991
31.2 Operation List 992

CHAPTER 32 ELECTRICAL SPECIFICATIONS (T_A = –40 to +85°C) 1009

32.1 Absolute Maximum Ratings 1010
32.2 Oscillator Characteristics 1013
32.2.1 X1 and XT1 oscillator characteristics 1013
32.2.2 On-chip oscillator characteristics 1014
32.3 DC Characteristics 1015
32.3.1 Pin characteristics 1015
32.3.2 Supply current characteristics 1020
32.4 AC Characteristics 1026
32.5 Peripheral Functions Characteristics 1031
32.5.1 Serial array unit 1031
32.5.2 Serial interface IICA 1053
32.6 Analog Characteristics 1058
32.6.1 A/D converter characteristics 1058
32.6.2 Temperature sensor /internal reference voltage characteristics 1062
32.6.3 Comparator characteristics 1062
32.6.4 POR circuit characteristics 1063
32.6.5 LVD circuit characteristics 1064
32.6.6 Supply voltage rising slope characteristics 1065
32.7 LCD Characteristics 1066
32.7.1 External resistance division method 1066
32.7.2 Internal voltage boosting method 1067
32.7.3 Capacitor split method 1069
32.8 RAM Data Retention Characteristics 1070
32.9 Flash Memory Programming Characteristics 1070
32.10 Dedicated Flash Memory Programmer Communication (UART) 1070
32.11 Timing Specifications for Switching Flash Memory Programming Modes 1071

CHAPTER 33 ELECTRICAL SPECIFICATIONS (T_A = –40 to +105°C) 1072

33.1 Absolute Maximum Ratings 1074
33.2 Oscillator Characteristics 1077
33.2.1 X1 and XT1 oscillator characteristics 1077
33.2.2 On-chip oscillator characteristics 1078
33.3 DC Characteristics 1079
33.3.1 Pin characteristics 1079

33.3.2 Supply current characteristics 1084
33.4 AC Characteristics 1090
33.5 Peripheral Functions Characteristics 1093
33.5.1 Serial array unit 1093
33.5.2 Serial interface IICA 1112
33.6 Analog Characteristics 1113
33.6.1 A/D converter characteristics 1113
33.6.2 Temperature sensor/internal reference voltage characteristics 1117
33.6.3 Comparator 1117
33.6.4 POR circuit characteristics 1118
33.6.5 LVD circuit characteristics 1119
33.6.6 Supply voltage rise time 1120
33.7 LCD Characteristics 1121
33.7.1 External resistance division method 1121
33.7.2 Internal voltage boosting method 1122
33.7.3 Capacitor split method 1124
33.8 RAM Data Retention Characteristics 1125
33.9 Flash Memory Programming Characteristics 1125
33.10 Dedicated Flash Memory Programmer Communication (UART) 1125
33.11 Timing Specifications for Switching Flash Memory Programming Modes 1126

CHAPTER 34 PACKAGE DRAWINGS 1127

34.1 64-pin Products 1127
34.2 80-pin Products 1131

APPENDIX A REVISION HISTORY 1134

A.1 Major Revisions in This Edition 1134
A.2 Revision History of Preceding Editions 1136

CHAPTER 1 OUTLINE

1.1 Features

Ultra-low power consumption technology

- V_{DD} = single power supply voltage of 1.6 to 5.5 V which can operate a 1.8 V device at a low voltage
- HALT mode
- STOP mode
- SNOOZE mode

RL78 CPU core

- CISC architecture with 3-stage pipeline
- Minimum instruction execution time: Can be changed from high speed (0.04167 μs: @ 24 MHz operation with high-speed on-chip oscillator) to ultra-low speed (30.5 μs: @ 32.768 kHz operation with subsystem clock)
- Address space: 1 MB
- General-purpose registers: (8-bit register × 8) × 4 banks
- On-chip RAM: 1 to 8 KB

Code flash memory

- Code flash memory: 16 to 128 KB
- Block size: 1 KB
- Prohibition of block erase and rewriting (security function)
- On-chip debug function
- Self-programming (with boot swap function/flash shield window function)

Data flash memory

- Data flash memory: 4 KB
- Back ground operation (BGO): Instructions can be executed from the program memory while rewriting the data flash memory.
- Number of rewrites: 1,000,000 times (TYP.)
- Voltage of rewrites: V_{DD} = 1.8 to 5.5 V

High-speed on-chip oscillator

- Select from 48 MHz, 24 MHz, 16 MHz, 12 MHz, 8 MHz, 6 MHz, 4 MHz, 3 MHz, 2 MHz, and 1 MHz
- High accuracy: ±1.0 % (V_{DD} = 1.8 to 5.5 V, T_A = -20 to +85°C)

Operating ambient temperature

- T_A = -40 to +85°C (A: Consumer applications)
- T_A = -40 to +105°C (G: Industrial applications)

Power management and reset function

- On-chip power-on-reset (POR) circuit
- On-chip voltage detector (LVD) (Select interrupt and reset from 14 levels)

DMA (Direct Memory Access) controller
- 4 channels
- Number of clocks during transfer between 8/16-bit SFR and internal RAM: 2 clocks

Multiplier and divider/multiply-accumulator
- 16 bits × 16 bits = 32 bits (Unsigned or signed)
- 32 bits ÷ 32 bits = 32 bits (Unsigned)
- 16 bits × 16 bits + 32 bits = 32 bits (Unsigned or signed)

Serial interface
- Simplified SPI (CSI[Note1]): 2 channels
- UART/UART (LIN-bus supported): 3, 4 channels/1 channel
- I^2C/Simplified I^2C communication: 1 channel/2 channels

Timer
- 16-bit timer: 8 channels (with remote control output function)
- 16-bit timer KB20 (IH): 1 channel (IH-only PWM output function)
- 12-bit interval timer: 1 channel
- Real-time clock 2: 1 channel (calendar for 99 years, alarm function, and clock correction function)
- Watchdog timer: 1 channel (operable with the dedicated low-speed on-chip oscillator)

A/D converter
- 8/10-bit resolution A/D converter (V_{DD} = 1.6 to 5.5 V)
- Analog input: 9 to 12 channels
- Internal reference voltage (1.45 V) and temperature sensor[Note 2]

Comparator
- 2 channels
- Operation mode: Comparator high-speed mode, comparator low-speed mode, or window mode
- External reference voltage and internal reference voltage are selectable

LCD controller/driver
- Segment signal output: 36 (32)[Note 3] to 51 (47)[Note 3]
- Common signal output: 4 (8)[Note 3]
- Internal voltage boosting method, capacitor split method, and external resistance division method are switchable

I/O port
- I/O port: 49 to 65 (N-ch open drain I/O [withstand voltage of 6 V]: 2,
  N-ch open drain I/O [V_{DD} withstand voltage]: 12 to 18)
- Can be set to N-ch open drain, TTL input buffer, and on-chip pull-up resistor
- Different potential interface: Can connect to a 1.8/2.5/3 V device
- On-chip key interrupt function
- On-chip clock output/buzzer output controller

Others
- On-chip BCD (binary-coded decimal) correction circuit

<R> **Notes 1.** Although the CSI function is generally called SPI, it is also called CSI in this product, so it is referred to as such in this manual.
2. Can be selected only in HS (high-speed main) mode
3. The values in parentheses are the number of signal outputs when 8 com is used.

Remark The functions mounted depend on the product. See **1.6 Outline of Functions**.

○ ROM, RAM capacities

Flash ROM	Data Flash	RAM	RL78/L13	
			64 pins	80 pins
128 KB	4 KB	8 KB[Note]	R5F10WLG	R5F10WMG
96 KB	4 KB	6 KB	R5F10WLF	R5F10WMF
64 KB	4 KB	4 KB	R5F10WLE	R5F10WME
48 KB	4 KB	2 KB	R5F10WLD	R5F10WMD
32 KB	4 KB	1.5 KB	R5F10WLC	R5F10WMC
16 KB	4 KB	1 KB	R5F10WLA	R5F10WMA

Note This is about 7 KB when the self-programming function and data flash function are used. (For details, see **CHAPTER 3**.)

1.2 List of Part Numbers

Figure 1-1. Part Number, Memory Size, and Package of RL78/L13

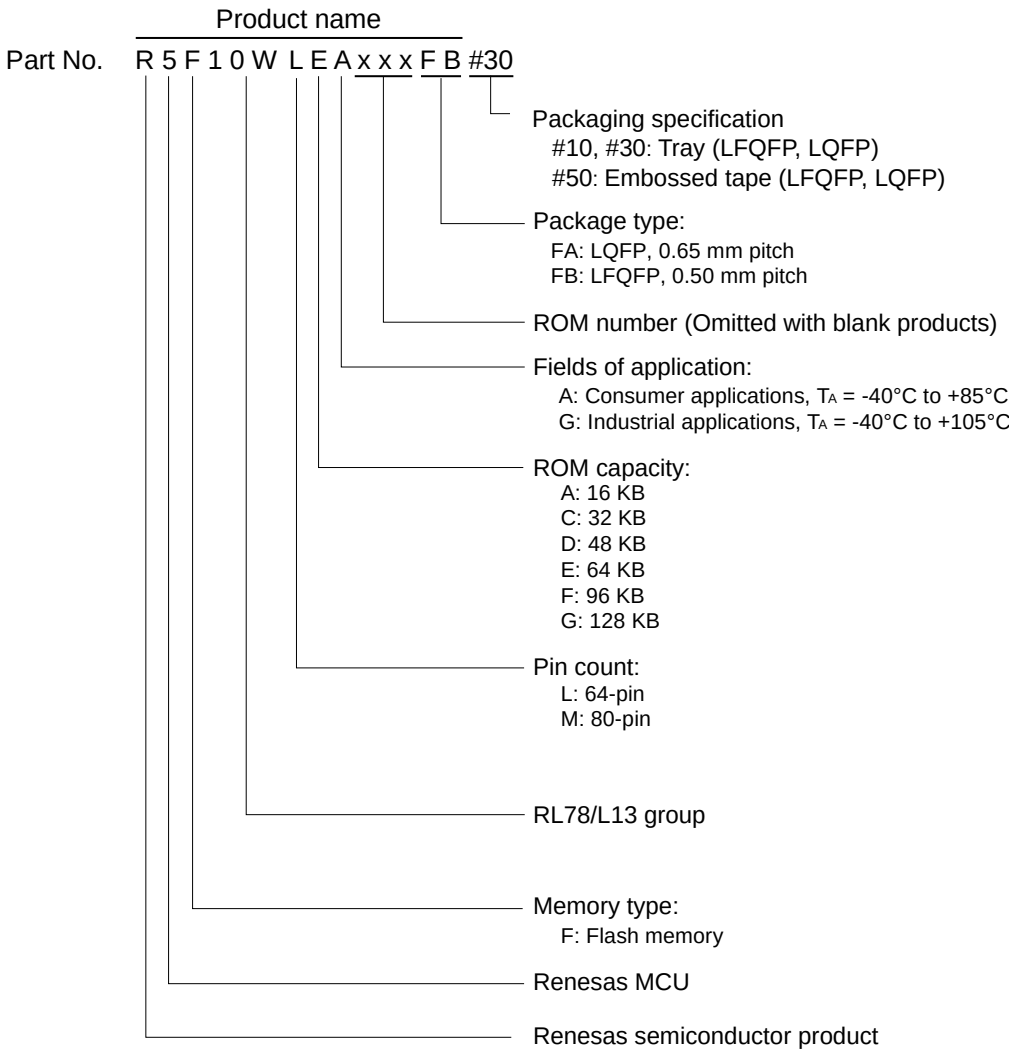

Pin Count	Package	Data Flash	Fields of Application[Note]	Ordering Part Number		RENESAS CODE
				part number	Packaging specification	
64 pins	64-pin plastic LQFP (12 × 12 mm, 0.65 mm pitch)	Mounted	A	R5F10WLAAFA, R5F10WLCAFA, R5F10WLDAFA, R5F10WLEAFA, R5F10WLFAFA, R5F10WLGAFA	#10, #30, #50	PLQP0064JA-A PLQP0064JB-A
	64-pin plastic LFQFP (10 × 10 mm, 0.5 mm pitch)	Mounted	A	R5F10WLAAFB, R5F10WLCAFB, R5F10WLDAFB, R5F10WLEAFB, R5F10WLFAFB, R5F10WLGAFB	#10, #50	PLQP0064KB-C PLQP0064KL-A
					#30	PLQP0064KB-C
			G	R5F10WLAGFB, R5F10WLCGFB, R5F10WLDGFB, R5F10WLEGFB, R5F10WLFGFB, R5F10WLGGFB	#10, #50	PLQP0064KB-C PLQP0064KL-A
					#30	PLQP0064KB-C
80 pins	80-pin plastic LQFP (14 × 14 mm, 0.65 mm pitch)	Mounted	A	R5F10WMAAFA, R5F10WMCAFA, R5F10WMDAFA, R5F10WMEAFA, R5F10WMFAFA, R5F10WMGAFA	#10, #30, #50	PLQP0080JB-E
	80-pin plastic LFQFP (12 × 12 mm, 0.5 mm pitch)	Mounted	A	R5F10WMAAFB, R5F10WMCAFB, R5F10WMDAFB, R5F10WMEAFB, R5F10WMFAFB, R5F10WMGAFB	#10, #50	PLQP0080KB-B PLQP0080KJ-A
					#30	PLQP0080KB-B
			G	R5F10WMAGFB, R5F10WMCGFB, R5F10WMDGFB, R5F10WMEGFB, R5F10WMFGFB, R5F10WMGGFB	#10, #50	PLQP0080KB-B PLQP0080KJ-A
					#30	PLQP0080KB-B

Note For the fields of application, see **Figure 1-1 Part Number, Memory Size, and Package of RL78/L13.**

1.3 Pin Configuration (Top View)

1.3.1 64-pin products

- 64-pin plastic LQFP (12 × 12 mm, 0.65 mm pitch)
- 64-pin plastic LFQFP (10 × 10 mm, 0.5 mm pitch)

<R>

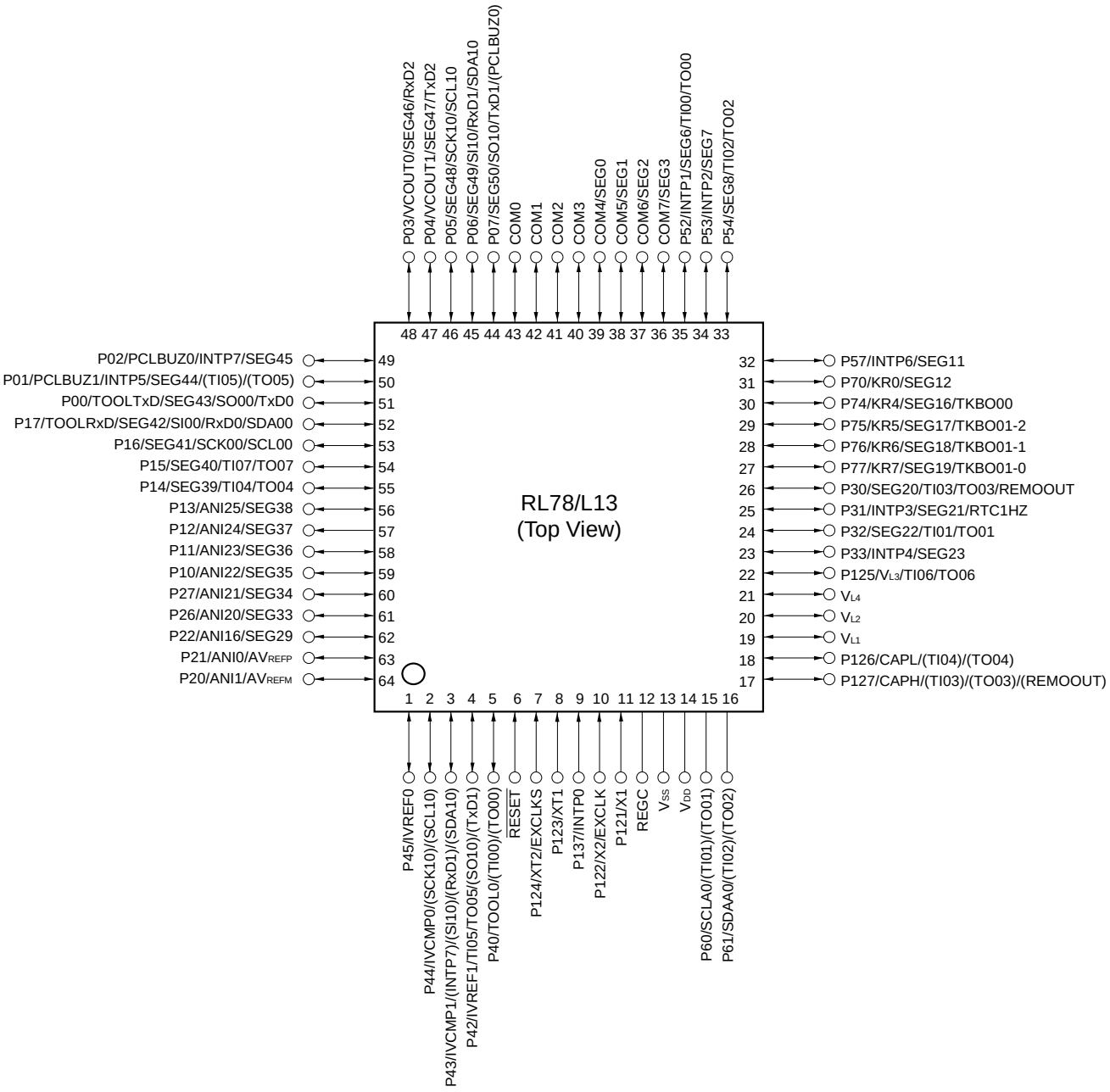

Caution Connect the REGC pin to V_{SS} via a capacitor (0.47 to 1 μF).

Remarks 1. For pin identification, see **1.4 Pin Identification**.

2. Functions in parentheses in the above figure can be assigned via settings in the peripheral I/O redirection register (PIOR). See **Figure 4-8 Format of Peripheral I/O Redirection Register (PIOR)**.

<R>

Table 1-1. Alternate function of 64-pin products (1/2)

Pin No.	I/O	Power supply, system clock, debug	Analog		HMI			Timer			Communications Interface	
64LQFP, 64LFQFP	Digital port		A/D converter	Comparator	Interrupt function	Key Interrupt function	LCD controller/driver	Timer array unit	16-bit timer KB20	Real-time clock 2	Serial array unit	Serial interface IICA
1	P45			IVREF0								
2	P44			IVCMP0							(SCK10)/(SCL10)	
3	P43			IVCMP1	(INTP7)						(SI10)/(RxD1)/(SDA10)	
4	P42			IVREF1				TI05/TO05			(SO10)/(TxD1)	
5	P40	TOOL0						(TI00)/(TO00)				
6		$\overline{\text{RESET}}$										
7	P124	XT2/EXCLKS										
8	P123	XT1										
9	P137				INTP0							
10	P122	X2/EXCLK										
11	P121	X1										
12		REGC										
13		V_{SS}										
14		V_{DD}										
15	P60							(TI01)/(TO01)				SCLA0
16	P61							(TI02)/(TO02)				SDAA0
17	P127						CAPH	(TI03)/(TO03)/(REMOOUT)				
18	P126						CAPL	(TI04)/(TO04)				
19							V_{L1}					
20							V_{L2}					
21							V_{L4}					
22	P125						V_{L3}	TI06/TO06				
23	P33				INTP4		SEG23					
24	P32						SEG22	TI01/TO01				
25	P31				INTP3		SEG21			RTC1HZ		
26	P30						SEG20	TI03/TO03/REMOOUT				
27	P77					KR7	SEG19		TKBO01-0			
28	P76					KR6	SEG18		TKBO01-1			
29	P75					KR5	SEG17		TKBO01-2			
30	P74					KR4	SEG16		TKBO00			
31	P70					KR0	SEG12					
32	P57				INTP6		SEG11					
33	P54						SEG8	TI02/TO02				
34	P53				INTP2		SEG7					
35	P52				INTP1		SEG6	TI00/TO00				

Table 1-1. Alternate function of 64-pin products (2/2)

Pin No.	I/O	Power supply, system clock, debug	Analog		HMI			Timer			Communications Interface	
64LQFP, 64LFQFP	Digital port		A/D converter	Comparator	Interrupt function	Key Interrupt function	LCD controller/driver	Timer array unit	16-bit timer KB20	Real-time clock 2	Serial array unit	Serial interface IICA
36							COM7/SEG3					
37							COM6/SEG2					
38							COM5/SEG1					
39							COM4/SEG0					
40							COM3					
41							COM2					
42							COM1					
43							COM0					
44	P07	(PCLBUZ0)					SEG50				SO10/TxD1	
45	P06						SEG49				SI10/RxD1/SDA10	
46	P05						SEG48				SCK10/SCL10	
47	P04			VCOUT1			SEG47				TxD2	
48	P03			VCOUT0			SEG46				RxD2	
49	P02	PCLBUZ0			INTP7		SEG45					
50	P01	PCLBUZ1			INTP5		SEG44	(TI05)/(TO05)				
51	P00	TOOLTxD					SEG43				SO00/TxD0	
52	P17	TOOLRxD					SEG42				SI00/RxD0/SDA00	
53	P16						SEG41				SCK00/SCL00	
54	P15						SEG40	TI07/TO07				
55	P14						SEG39	TI04/TO04				
56	P13		ANI25				SEG38					
57	P12		ANI24				SEG37					
58	P11		ANI23				SEG36					
59	P10		ANI22				SEG35					
60	P27		ANI21				SEG34					
61	P26		ANI20				SEG33					
62	P22		ANI16				SEG29					
63	P21		ANI0/AV_{REFP}									
64	P20		ANI1/AV_{REFM}									

1.3.2 80-pin products

- 80-pin plastic LQFP (14 × 14 mm, 0.65 mm pitch)
- 80-pin plastic LFQFP (12 × 12 mm, 0.5 mm pitch)

<R>

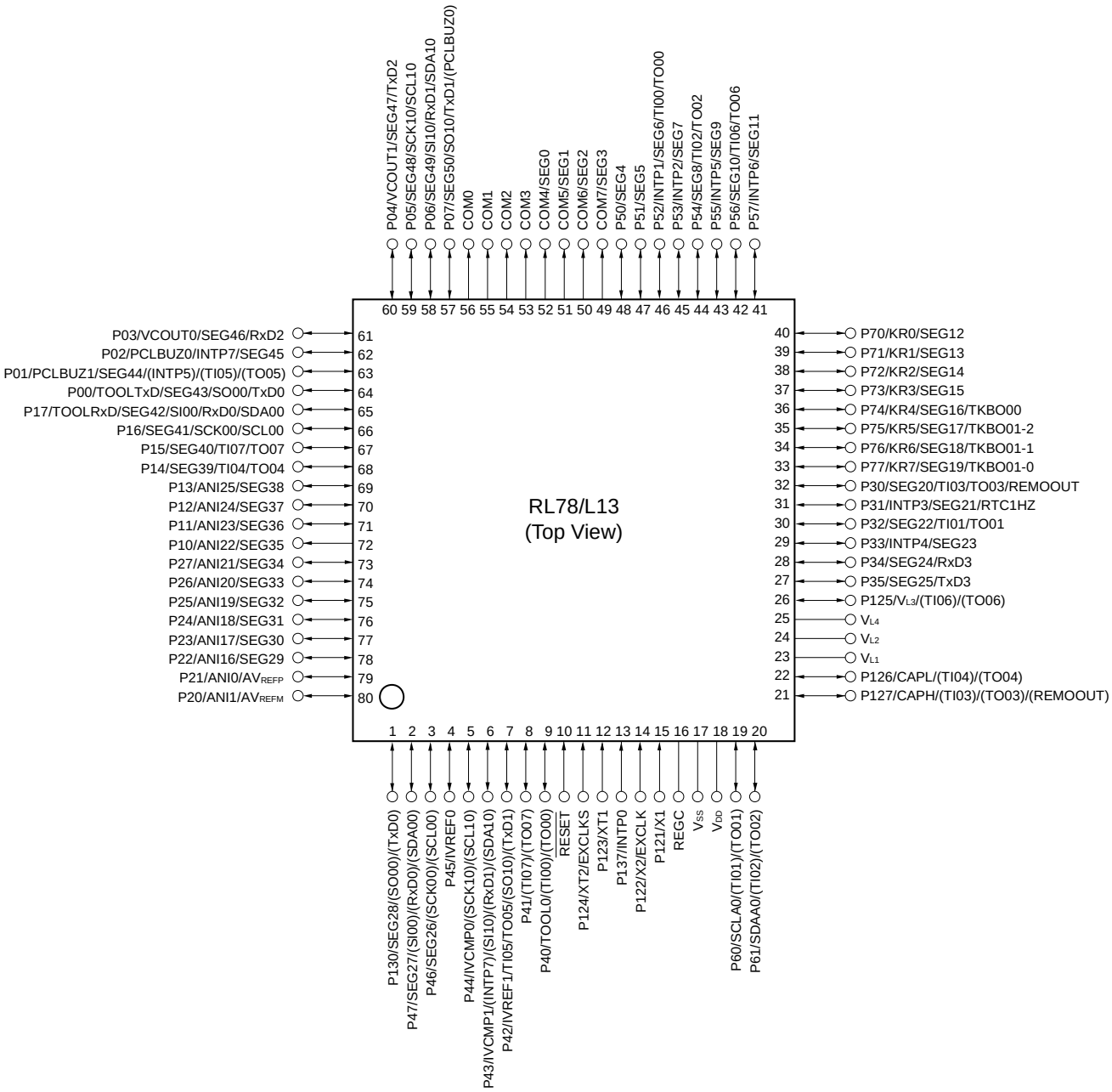

Caution Connect the REGC pin to V_{SS} via a capacitor (0.47 to 1 μF).

Remarks 1. For pin identification, see **1.4 Pin Identification**.

2. Functions in parentheses in the above figure can be assigned via settings in the peripheral I/O redirection register (PIOR). See **Figure 4-8 Format of Peripheral I/O Redirection Register (PIOR)**.

<R>

Table 1-2. Alternate function of 80-pin products (1/3)

Pin No.	I/O		Analog		HMI			Timer			Communications Interface	
80LQFP, 80LFQFP	Digital port	Power supply, system clock, debug	A/D converter	Comparator	Interrupt function	Key Interrupt function	LCD controller/driver	Timer array unit	16-bit timer KB20	Real-time clock 2	Serial array unit	Serial interface IICA
1	P130						SEG28				(SO00)/(TxD0)	
2	P47						SEG27				(SI00)/(RxD0)/(SDA00)	
3	P46						SEG26				(SCK00)/(SCL00)	
4	P45			IVREF0								
5	P44			IVCMP0							(SCK10)/(SCL10)	
6	P43			IVCMP1	(INTP7)						(SI10)/(RxD1)/(SDA10)	
7	P42			IVREF1				TI05/TO05			(SO10)/(TxD1)	
8	P41							(TI07)/(TO07)				
9	P40	TOOL0						(TI00)/(TO00)				
10		$\overline{\text{RESET}}$										
11	P124	XT2/EXCLKS										
12	P123	XT1										
13	P137				INTP0							
14	P122	X2/EXCLK										
15	P121	X1										
16		REGC										
17		V_{SS}										
18		V_{DD}										
19	P60							(TI01)/(TO01)				SCLA0
20	P61							(TI02)/(TO02)				SDAA0
21	P127						CAPH	(TI03)/(TO03)/(REMOOUT)				
22	P126						CAPL	(TI04)/(TO04)				
23							V_{L1}					
24							V_{L2}					
25							V_{L4}					
26	P125						V_{L3}	(TI06)/(TO06)				
27	P35						SEG25				TxD3	
28	P34						SEG24				RxD3	
29	P33				INTP4		SEG23					
30	P32						SEG22	TI01/TO01				

Table 1-2. Alternate function of 80-pin products (2/3)

Pin No.	I/O	Power supply, system clock, debug	Analog		HMI			Timer			Communications Interface	
80LQFP, 80LFQFP	Digital port		A/D converter	Comparator	Interrupt function	Key Interrupt function	LCD controller/driver	Timer array unit	16-bit timer KB20	Real-time clock 2	Serial array unit	Serial interface IICA
31	P31				INTP3		SEG21			RTC1HZ		
32	P30						SEG20	TI03/TO03/REMOOUT				
33	P77					KR7	SEG19		TKBO01-0			
34	P76					KR6	SEG18		TKBO01-1			
35	P75					KR5	SEG17		TKBO01-2			
36	P74					KR4	SEG16		TKBO00			
37	P73					KR3	SEG15					
38	P72					KR2	SEG14					
39	P71					KR1	SEG13					
40	P70					KR0	SEG12					
41	P57				INTP6		SEG11					
42	P56						SEG10	TI06/TO06				
43	P55				INTP5		SEG9					
44	P54						SEG8	TI02/TO02				
45	P53				INTP2		SEG7					
46	P52				INTP1		SEG6	TI00/TO00				
47	P51						SEG5					
48	P50						SEG4					
49							COM7/SEG3					
50							COM6/SEG2					
51							COM5/SEG1					
52							COM4/SEG0					
53							COM3					
54							COM2					
55							COM1					
56							COM0					
57	P07	(PCLBUZ0)					SEG50				SO10/TxD1	

Table 1-2. Alternate function of 80-pin products (3/3)

Pin No.	I/O	Power supply, system clock, debug	Analog		HMI			Timer			Communications Interface	
80LQFP, 80LFQFP	Digital port		A/D converter	Comparator	Interrupt function	Key Interrupt function	LCD controller/driver	Timer array unit	16-bit timer KB20	Real-time clock 2	Serial array unit	Serial interface IICA
58	P06						SEG49				SI10/RxD1/SDA10	
59	P05						SEG48				SCK10/SCL10	
60	P04			VCOUT1			SEG47				TxD2	
61	P03			VCOUT0			SEG46				RxD2	
62	P02	PCLBUZ0			INTP7		SEG45					
63	P01	PCLBUZ1			(INTP5)		SEG44	(TI05)/(TO05)				
64	P00	TOOLTxD					SEG43				SO00/TxD0	
65	P17	TOOLRxD					SEG42				SI00/RxD0/SDA00	
66	P16						SEG41				SCK00/SCL00	
67	P15						SEG40	TI07/TO07				
68	P14						SEG39	TI04/TO04				
69	P13		ANI25				SEG38					
70	P12		ANI24				SEG37					
71	P11		ANI23				SEG36					
72	P10		ANI22				SEG35					
73	P27		ANI21				SEG34					
74	P26		ANI20				SEG33					
75	P25		ANI19				SEG32					
76	P24		ANI18				SEG31					
77	P23		ANI17				SEG30					
78	P22		ANI16				SEG29					
79	P21		ANI0/AVREFP									
80	P20		ANI1/AVREFM									

1.4 Pin Identification

ANI0, ANI1, ANI16 to ANI25:	Analog Input
AV_{REFM}:	Analog Reference Voltage Minus
AV_{REFP}:	Analog Reference Voltage Plus
CAPH, CAPL:	Capacitor for LCD
COM0 to COM7:	LCD Common Output
EXCLK:	External Clock Input (Main System Clock)
EXCLKS:	External Clock Input (Subsystem Clock)
INTP0 to INTP7:	External Interrupt Input
IVCMP0, IVCMP1:	Comparator Input
IVREF0, IVREF1:	Comparator Reference Input
KR0 to KR7:	Key Return
P00 to P07:	Port 0
P10 to P17:	Port 1
P20 to P27:	Port 2
P30 to P35:	Port 3
P40 to P47:	Port 4
P50 to P57:	Port 5
P60, P61:	Port 6
P70 to P77:	Port 7
P121 to P127:	Port 12
P130, P137:	Port 13
PCLBUZ0, PCLBUZ1:	Programmable Clock Output/ Buzzer Output
REGC:	Regulator Capacitance
REMOOUT:	Remote control Output
$\overline{RESET}$:	Reset
RTC1HZ:	Real-time Clock 2 Correction Clock (1 Hz) Output
RxD0 to RxD3:	Receive Data
SCK00, SCK10, SCLA0:	Serial Clock Input/Output
SCL00, SCL10:	Serial Clock Output
SDAA0, SDA00, SDA10:	Serial Data Input/Output
SEG0 to SEG50:	LCD Segment Output
SI00, SI10:	Serial Data Input
SO00, SO10:	Serial Data Output
TI00 to TI07:	Timer Input
TO00 to TO07, TKBO00, TKBO01-0, TKBO01-1, TKBO01-2:	Timer Output
TOOL0:	Data Input/Output for Tool
TOOLRxD, TOOLTxD:	Data Input/Output for External Device
TxD0 to TxD3:	Transmit Data
VCOUT0, VCOUT1:	Comparator Output
V_{DD}:	Power Supply
V_{L1} to V_{L4}:	LCD Power Supply
V_{SS}:	Ground
X1, X2:	Crystal Oscillator (Main System Clock)
XT1, XT2:	Crystal Oscillator (Subsystem Clock)

1.5 Block Diagram

1.5.1 64-pin products

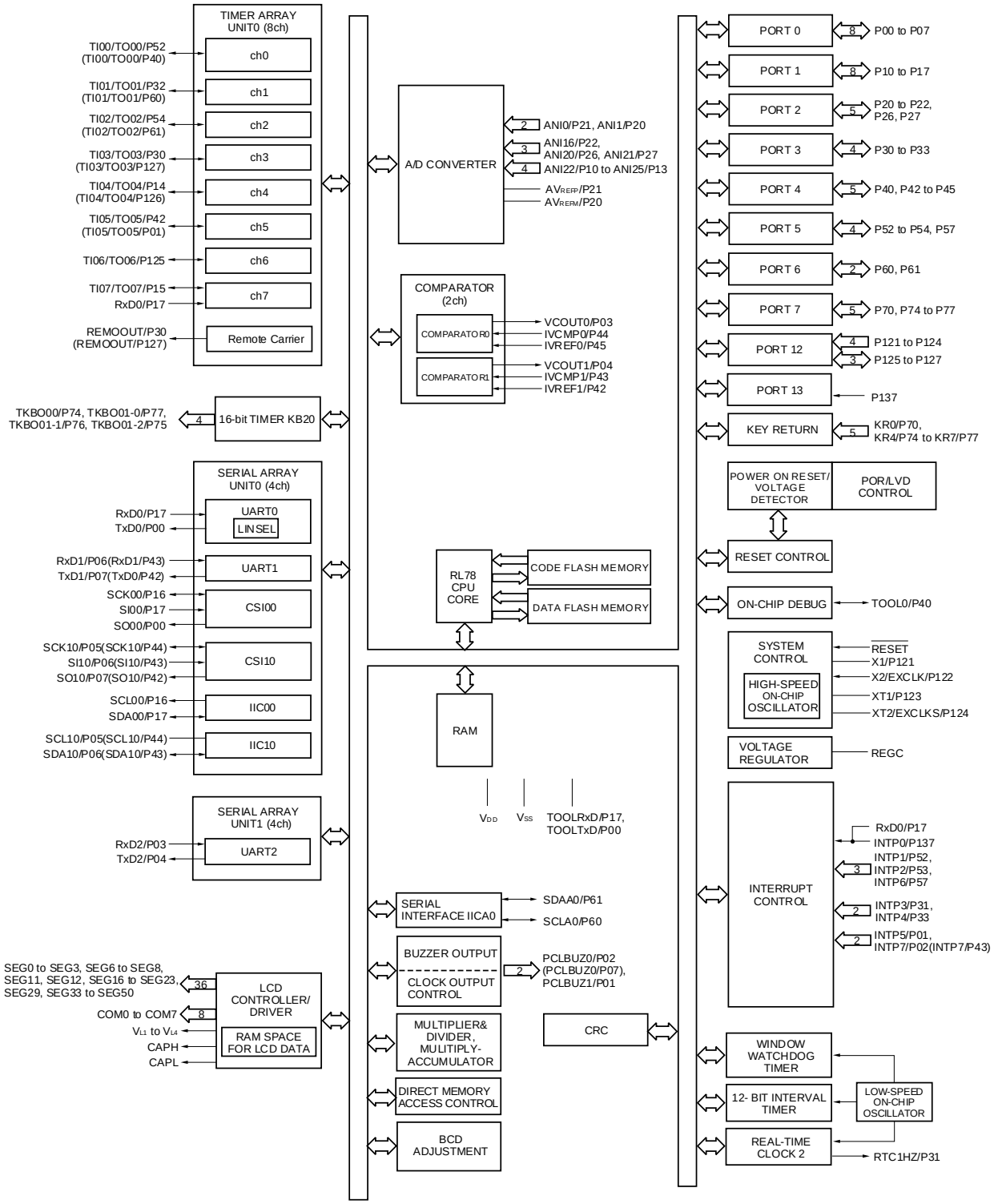

Remark Functions in parentheses in the above figure can be assigned via settings in the peripheral I/O redirection register (PIOR). See **Figure 4-8 Format of Peripheral I/O Redirection Register (PIOR)**.

1.5.2 80-pin products

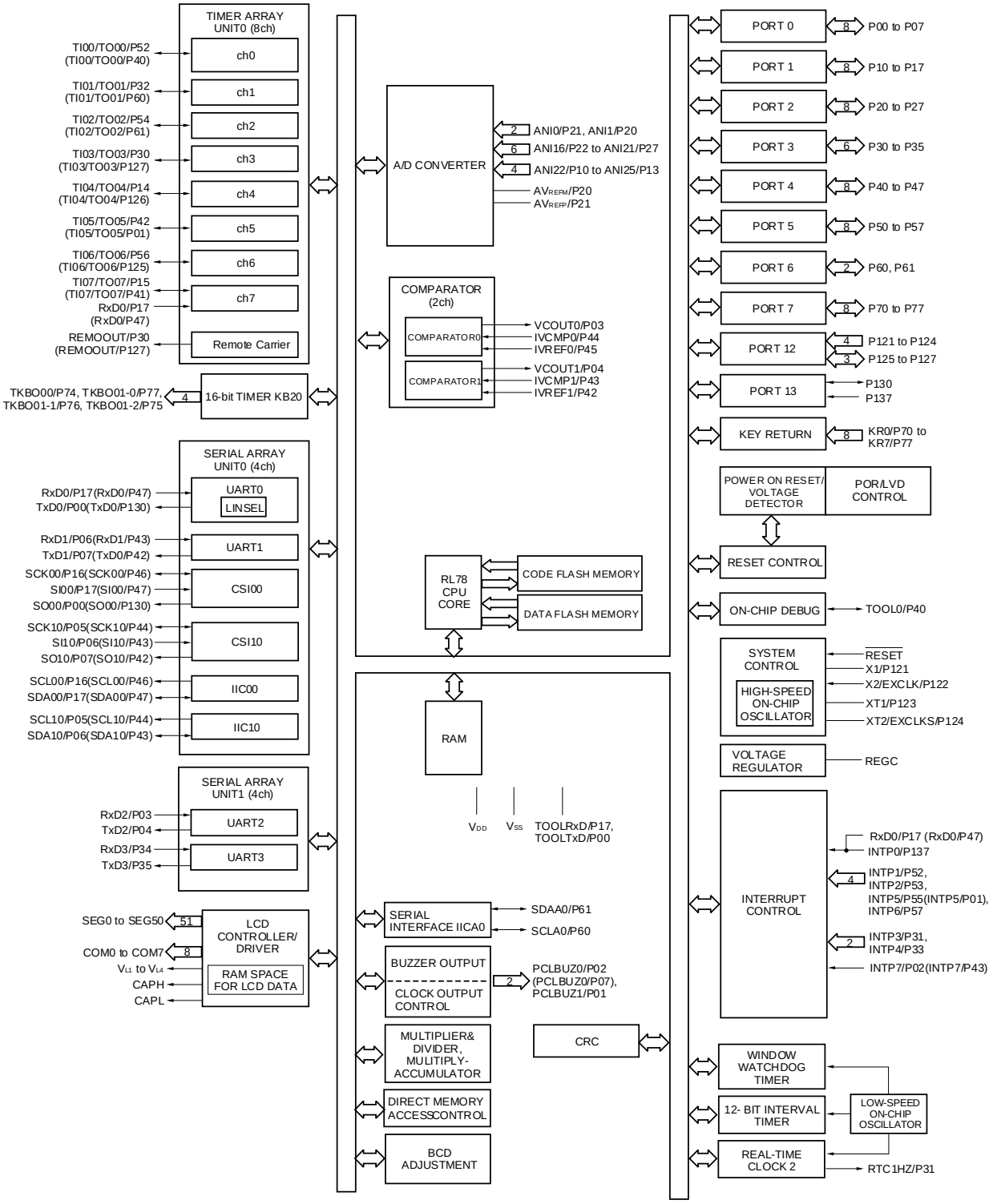

Remark Functions in parentheses in the above figure can be assigned via settings in the peripheral I/O redirection register (PIOR). See **Figure 4-8 Format of Peripheral I/O Redirection Register (PIOR)**.

1.6 Outline of Functions

(1/2)

Item		64-pin	80-pin
		R5F10WLx (x = A, C-G)	R5F10WMx (x = A, C-G)
Code flash memory (KB)		16 to 128	16 to 128
Data flash memory (KB)		4	4
RAM (KB)		1 to 8[Note 1]	1 to 8[Note 1]
Address space		1 MB	
Main system clock	High-speed system clock	X1 (crystal/ceramic) oscillation, external main system clock input (EXCLK) HS (High-speed main) mode: 1 to 20 MHz (V_{DD} = 2.7 to 5.5 V), HS (High-speed main) mode: 1 to 16 MHz (V_{DD} = 2.4 to 5.5 V), LS (Low-speed main) mode: 1 to 8 MHz (V_{DD} = 1.8 to 5.5 V), LV (Low-voltage main) mode: 1 to 4 MHz (V_{DD} = 1.6 to 5.5 V)	
	High-speed on-chip oscillator	HS (High-speed main) mode: 1 to 24 MHz (V_{DD} = 2.7 to 5.5 V), HS (High-speed main) mode: 1 to 16 MHz (V_{DD} = 2.4 to 5.5 V), LS (Low-speed main) mode: 1 to 8 MHz (V_{DD} = 1.8 to 5.5 V), LV (Low-voltage main) mode: 1 to 4 MHz (V_{DD} = 1.6 to 5.5 V)	
Clock for 16-bit timer KB20		48 MHz (TYP.): V_{DD} = 2.7 to 5.5 V	
Subsystem clock		XT1 (crystal) oscillation, external subsystem clock input (EXCLKS) 32.768 kHz (TYP.): V_{DD} = 1.6 to 5.5 V	
Low-speed on-chip oscillator		15 kHz (TYP.)	
General-purpose register		(8-bit register × 8) × 4 banks	
Minimum instruction execution time		0.04167 μs (High-speed on-chip oscillator: f_{IH} = 24 MHz operation)	
		0.05 μs (High-speed system clock: f_{MX} = 20 MHz operation)	
		30.5 μs (Subsystem clock: f_{SUB} = 32.768 kHz operation)	
Instruction set		● Data transfer (8/16 bits) ● Adder and subtractor/logical operation (8/16 bits) ● Multiplication (8 bits × 8 bits) ● Rotate, barrel shift, and bit manipulation (Set, reset, test, and Boolean operation), etc.	
I/O port	Total	49	65
	CMOS I/O	42 (N-ch O.D. I/O [V_{DD} withstand voltage]: 12)	58 (N-ch O.D. I/O [V_{DD} withstand voltage]: 18)
	CMOS input	5	5
	CMOS output	—	—
	N-ch O.D I/O (withstand voltage: 6 V)	2	2
Timer	16-bit timer TAU	8 channels	
	16-bit timer KB20	1 channel	
	Watchdog timer	1 channel	
	12-bit interval timer (IT)	1 channel	
	Real-time clock 2	1 channel	
	RTC2 output	1 ● 1 Hz (subsystem clock: f_{SUB} = 32.768 kHz)	
	Timer output	8 channels (PWM outputs: 7[Note 2]) (TAU used) 1 channel (timer KB20 used)	
	Remote control output function	1 (TAU used)	

Notes 1. In the case of the 8 KB, this is about 7 KB when the self-programming function and data flash function are used.

2. The number of outputs varies depending on the setting of the channels in use and the number of master channels (see **6.9.3 Operation as multiple PWM output function**).

(2/2)

Item		64-pin	80-pin
		R5F10WLx (x = A, C-G)	R5F10WMx (x = A, C-G)
Clock output/buzzer output controller		2	
		● 2.44 kHz, 4.88 kHz, 9.76 kHz, 1.25 MHz, 2.5 MHz, 5 MHz, 10 MHz (Main system clock: f_{MAIN} = 20 MHz operation) ● 256 Hz, 512 Hz, 1.024 kHz, 2.048 kHz, 4.096 kHz, 8.192 kHz, 16.384 kHz, 32.768 kHz (Subsystem clock: f_{SUB} = 32.768 kHz operation)	
8/10-bit resolution A/D converter		9 channels	12 channels
Comparator		2 channels	
Serial interface		[64-pin] ● Simplified SPI (CSI): 1 channel/UART (UART supporting LIN-bus): 1 channel/simplified I²C: 1 channel ● Simplified SPI (CSI): 1 channel/UART: 1 channel/simplified I²C: 1 channel ● UART: 1 channel [80-pin] ● Simplified SPI (CSI): 1 channel/UART (UART supporting LIN-bus): 1 channel/simplified I²C: 1 channel ● Simplified SPI (CSI): 1 channel/UART: 1 channel/simplified I²C: 1 channel ● UART: 2 channels	
	I²C bus	1 channel	
LCD controller/driver		Internal voltage boosting method, capacitor split method, and external resistance division method are switchable.	
	Segment signal output	36 (32)[Note 1]	51 (47)[Note 1]
	Common signal output	4 (8)[Note 1]	
Multiplier and divider/multiply-accumulator		● 16 bits × 16 bits = 32 bits (Unsigned or signed) ● 32 bits ÷ 32 bits = 32 bits (Unsigned) ● 16 bits × 16 bits + 32 bits = 32 bits (Unsigned or signed)	
DMA controller		4 channels	
Vectored interrupt sources	Internal	32	35
	External	11	11
Key interrupt		5	8
Reset		● Reset by $\overline{\text{RESET}}$ pin ● Internal reset by watchdog timer ● Internal reset by power-on-reset ● Internal reset by voltage detector ● Internal reset by illegal instruction execution[Note 2] ● Internal reset by RAM parity error ● Internal reset by illegal-memory access	
Power-on-reset circuit		● Power-on-reset: 1.51 V (TYP.) ● Power-down-reset: 1.50 V (TYP.)	
Voltage detector		● Rising edge: 1.67 V to 4.06 V (14 steps) ● Falling edge: 1.63 V to 3.98 V (14 steps)	
On-chip debug function		Provided	
Power supply voltage		V_{DD} = 1.6 to 5.5 V (TA = -40 to +85°C) V_{DD} = 2.4 to 5.5 V (TA = -40 to +105°C)	
Operating ambient temperature		Consumer applications: T_A = -40 to +85°C Industrial applications: T_A = -40 to +105°C	

Notes 1. The values in parentheses are the number of signal outputs when 8 com is used.

2. This reset occurs when instruction code FFH is executed.
This reset does not occur during emulation using an in-circuit emulator or an on-chip debugging emulator.

CHAPTER 2 PIN FUNCTIONS

2.1 Port Function

The I/O buffer power supply for pins is provided by V_{DD}. Set in each port I/O, buffer, pull-up resistor is also valid for alternate functions.

2.1.1 64-pin products

(1/3)

Function Name	Pin Type	I/O	After Reset Release	Alternate Function	Function
P00	7-5-10	I/O	Digital input invalid[Note 1]	SEG43/SO00/ TxD0/TOOLTxD	Port 0. 8-bit I/O port. Input/output can be specified in 1-bit units. Use of an on-chip pull-up resistor can be specified by a software setting at input port. Input of P03, P05, and P06 can be set to TTL input buffer. Output of P00 and P04 to P07 can be set to N-ch open-drain output (V_{DD} tolerance). Can be set to LCD output[Note 2].
P01	7-5-4			(TI05)/(TO05)/INTP5/ PCLBUZ1/SEG44	
P02				INTP7/PCLBUZ0/ SEG45	
P03	8-5-4			RxD2/SEG46/VCOUT0	
P04	7-5-10			TxD2/SEG47/VCOUT1	
P05	8-5-10			SCK10/SCL10/SEG48	
P06				SI10/RxD1/SDA10/ SEG49	
P07	7-5-10			SO10/TxD1/ (PCLBUZ0)/SEG50	
P10	7-10-3	I/O	Analog input	ANI22/SEG35	Port 1. 8-bit I/O port. Input/output can be specified in 1-bit units. Use of an on-chip pull-up resistor can be specified by a software setting at input port. Input of P16 and P17 can be set to TTL input buffer. Output of P16 and P17 can be set to N-ch open-drain output (V_{DD} tolerance). P10 to P13 can be set to analog input[Note 3]. P10 to P13 can be set to LCD output[Note 3]. P14 to P17 can be set to LCD output[Note 2].
P11				ANI23/SEG36	
P12				ANI24/SEG37	
P13				ANI25/SEG38	
P14	7-5-4		Digital input invalid[Note 1]	TI04/TO04/SEG39	
P15				TI07/TO07/SEG40	
P16	8-5-10			SEG41/SCK00/SCL00	
P17				SEG42/SI00/RxD0/ TOOLRxD/SDA00	
P20	4-3-3	I/O	Analog input	ANI1/AV_{REFM}	Port 2. 5-bit I/O port. Input/output can be specified in 1-bit units. P22, P26, and P27 use of an on-chip pull-up resistor can be specified by a software setting at input port. P20 and P21 can be set to analog input[Note 4]. P22, P26, and P27 can be set to analog input[Note 3]. P22, P26, and P27 can be set to LCD output[Note 3].
P21				ANI0/AV_{REFP}	
P22	7-10-3			ANI16/SEG29	
P26				ANI20/SEG33	
P27				ANI21/SEG34	

Notes 1. "Digital input invalid" refers to the state in which all the digital outputs, digital inputs, analog inputs, and LCD outputs are disabled.

2. Digital or LCD for each pin can be selected with the port mode register x (PMx) and the LCD port function register x (PFSEGx) (can be set in 1-bit unit).

3. Digital, analog, or LCD for each pin can be selected with the port mode control register x (PMCx), the port mode register x (PMx), and the LCD port function register x (PFSEGx) (can be set in 1-bit unit).

4. Setting digital or analog to each pin can be done in A/D port configuration register (ADPC).

Remark Functions in parentheses in the above figure can be assigned via settings in the peripheral I/O redirection register (PIOR). See **Figure 4-8 Format of Peripheral I/O Redirection Register (PIOR)**.

(2/3)

Function Name	Pin Type	I/O	After Reset Release	Alternate Function	Function
P30	7-5-4	I/O	Digital input invalid[Note 1]	TI03/TO03/SEG20/ REMOOUT	Port 3. 4-bit I/O port. Input/output can be specified in 1-bit units. Use of an on-chip pull-up resistor can be specified by a software setting at input port. Can be set to LCD output[Note 2].
P31				INTP3/RTC1HZ/SEG21	
P32				TI01/TO01/SEG22	
P33				INTP4/SEG23	
P40	7-1-3	I/O	Input port	TOOL0/(TI00)/(TO00)	Port 4. 5-bit I/O port. Input/output can be specified in 1-bit units. Use of an on-chip pull-up resistor can be specified by a software setting at input port. Input of P43 and P44 can be set to TTL input buffer. Output of P42 to P44 can be set to N-ch open-drain output (V_{DD} tolerance). P42 to P44 can be set to analog input[Note 3]. P45 can be set to analog input[Note 4].
P42	7-6-4			TI05/TO05/(SO10)/ (TxD1)/IVREF1	
P43	8-6-4			(INTP7)/(SI10)/(RxD1)/ (SDA10)/IVCMP1	
P44				(SCK10)/(SCL10)/ IVCMP0	
P45	7-6-9		Digital input invalid[Note 1]	IVREF0	
P52	7-5-4	I/O	Digital input invalid[Note 1]	TI00/TO00/INTP1/ SEG6	Port 5. 4-bit I/O port. Input/output can be specified in 1-bit units. Use of an on-chip pull-up resistor can be specified by a software setting at input port. Input of P53 can be set to TTL input buffer. Output of P53 and P54 can be set to N-ch open-drain output (V_{DD} tolerance). Can be set to LCD output[Note 2].
P53	8-5-10			INTP2/SEG7	
P54	7-5-10			TI02/TO02/SEG8	
P57	7-5-4			INTP6/SEG11	
P60	12-1-3	I/O	Input port	SCLA0/(TI01)/(TO01)	Port 6. 2-bit I/O port. Input/output can be specified in 1-bit units. N-ch open-drain output (6 V tolerance).
P61				SDAA0/(TI02)/(TO02)	
P70	7-5-4	I/O	Digital input invalid[Note 1]	KR0/SEG12	Port 7. 5-bit I/O port. Input/output can be specified in 1-bit units. Use of an on-chip pull-up resistor can be specified by a software setting at input port. Can be set to LCD output[Note 2].
P74	7-5-16			KR4/SEG16/TKBO00	
P75				KR5/SEG17/TKBO01-2	
P76				KR6/SEG18/TKBO01-1	
P77				KR7/SEG19/TKBO01-0	

Notes 1. "Digital input invalid" refers to the state in which all the digital outputs, digital inputs, analog inputs, and LCD outputs are disabled.

2. Digital or LCD for each pin can be selected with the port mode register x (PMx) and the LCD port function register x (PFSEGx) (can be set in 1-bit unit).

3. Digital or analog for each pin can be selected with the port mode control register x (PMCx) (can be set in 1-bit unit).

4. Digital or analog for each pin can be selected with the port mode control register x (PMCx) and the LCD port function register 3 (PFSEG3).

Remark Functions in parentheses in the above figure can be assigned via settings in the peripheral I/O redirection register (PIOR). See **Figure 4-8 Format of Peripheral I/O Redirection Register (PIOR)**.

(3/3)

Function Name	Pin Type	I/O	After Reset Release	Alternate Function	Function
P121	2-2-1	Input	Input port	X1	Port 12. 3-bit I/O port and 4-bit input only port. For P125 to P127, input/output can be specified in 1-bit units. For P125 to P127, use of an on-chip pull-up resistor can be specified by a software setting at input port. P125 to P127 can be set to LCD output[Note 2].
P122				X2/EXCLK	
P123				XT1	
P124				XT2/EXCLKS	
P125	7-5-6	I/O	Digital input invalid[Note 1]	V_{L3}/TI06/TO06	
P126	7-5-5			CAPL/(TI04)/(TO04)	
P127				CAPH/(TI03)/(TO03)/(REMOOUT)	
P137	2-1-2	Input	Input port	INTP0	Port 13. 1-bit input only port.
$\overline{\text{RESET}}$	2-1-1	Input	–	–	Input only pin for external reset. When external reset is not used, connect this pin to V_{DD} directly or via a resistor.

Notes 1. "Digital input invalid" refers to the state in which all the digital outputs, digital inputs, analog inputs, and LCD outputs are disabled.

2. Digital or LCD for each pin can be selected with the port mode register x (PMx) and the LCD port function register x (PFSEGx) (can be set in 1-bit unit).

Remark Functions in parentheses in the above figure can be assigned via settings in the peripheral I/O redirection register (PIOR). See **Figure 4-8 Format of Peripheral I/O Redirection Register (PIOR)**.

2.1.2 80-pin products

(1/3)

Function Name	Pin Type	I/O	After Reset Release	Alternate Function	Function
P00	7-5-10	I/O	Digital input invalid[Note 1]	SEG43/SO00/ TxD0/TOOLTxD	Port 0. 8-bit I/O port. Input/output can be specified in 1-bit units. Use of an on-chip pull-up resistor can be specified by a software setting at input port. Input of P03, P05, and P06 can be set to TTL input buffer. Output of P00 and P04 to P07 can be set to N-ch open-drain output (V_{DD} tolerance). Can be set to LCD output[Note 2].
P01	7-5-4			(TI05)/(TO05)/(INTP5)/ PCLBUZ1/SEG44	
P02				INTP7/PCLBUZ0/ SEG45	
P03	8-5-4			RxD2/SEG46/VCOUT0	
P04	7-5-10			TxD2/SEG47/VCOUT1	
P05	8-5-10			SCK10/SCL10/SEG48	
P06				SI10/RxD1/SDA10/ SEG49	
P07	7-5-10			SO10/TxD1/ (PCLBUZ0)/SEG50	
P10	7-10-3	I/O	Analog input	ANI22/SEG35	Port 1. 8-bit I/O port. Input/output can be specified in 1-bit units. Use of an on-chip pull-up resistor can be specified by a software setting at input port. Input of P16 and P17 can be set to TTL input buffer. Output of P16 and P17 can be set to N-ch open-drain output (V_{DD} tolerance). P10 to P13 can be set to analog input[Note 3]. P10 to P13 can be set to LCD output[Note 3]. P14 to P17 can be set to LCD output[Note 2].
P11				ANI23/SEG36	
P12				ANI24/SEG37	
P13				ANI25/SEG38	
P14	7-5-4		Digital input invalid[Note 1]	TI04/TO04/SEG39	
P15				TI07/TO07/SEG40	
P16	8-5-10			SEG41/SCK00/SCL00	
P17				SEG42/SI00/RxD0/ TOOLRxD/SDA00	
P20	4-3-3	I/O	Analog input	ANI1/AV_{REFM}	Port 2. 8-bit I/O port. Input/output can be specified in 1-bit units. P22 to P27 use of an on-chip pull-up resistor can be specified by a software setting at input port. P20 and P21 can be set to analog input[Note 4]. P22 to P27 can be set to analog input[Note 3]. P22 to P27 can be set to LCD output[Note 3].
P21				ANI0/AV_{REFP}	
P22	7-10-3			ANI16/SEG29	
P23				ANI17/SEG30	
P24				ANI18/SEG31	
P25				ANI19/SEG32	
P26				ANI20/SEG33	
P27				ANI21/SEG34	

Notes 1. "Digital input invalid" refers to the state in which all the digital outputs, digital inputs, analog inputs, and LCD outputs are disabled.

2. Digital or LCD for each pin can be selected with the port mode register x (PMx) and the LCD port function register x (PFSEGx) (can be set in 1-bit unit).

3. Digital, analog, or LCD for each pin can be selected with the port mode control register x (PMCx), the port mode register x (PMx), and the LCD port function register x (PFSEGx) (can be set in 1-bit unit).

4. Setting digital or analog to each pin can be done in A/D port configuration register (ADPC).

Remark Functions in parentheses in the above figure can be assigned via settings in the peripheral I/O redirection register (PIOR). See **Figure 4-8 Format of Peripheral I/O Redirection Register (PIOR)**.

(2/3)

Function Name	Pin Type	I/O	After Reset Release	Alternate Function	Function
P30	7-5-4	I/O	Digital input invalid[Note 1]	TI03/TO03/SEG20/ REMOOUT	Port 3. 6-bit I/O port. Input/output can be specified in 1-bit units. Use of an on-chip pull-up resistor can be specified by a software setting at input port. Input of P34 can be set to TTL input buffer. Output of P35 can be set to N-ch open-drain output (V_{DD} tolerance). Can be set to LCD output[Note 2].
P31				INTP3/RTC1HZ/SEG21	
P32				TI01/TO01/SEG22	
P33				INTP4/SEG23	
P34	8-5-4			RxD3/SEG24	
P35	7-5-10			TxD3/SEG25	
P40	7-1-3	I/O	Input port	TOOL0/(TI00)/(TO00)	Port 4. 8-bit I/O port. Input/output can be specified in 1-bit units. Use of an on-chip pull-up resistor can be specified by a software setting at input port. Input of P43, P44, P46, and P47 can be set to TTL input buffer. Output of P42 to P44, P46, and P47 can be set to N-ch open-drain output (V_{DD} tolerance). P42 to P44 can be set to analog input[Note 3]. P45 can be set to analog input[Note 4]. P46 and P47 can be set to LCD output[Note 2].
P41				(TI07)/(TO07)	
P42	7-6-4			TI05/TO05/(SO10)/ (TxD1)/IVREF1	
P43	8-6-4			(INTP7)/(SI10)/(RxD1)/ (SDA10)/IVCMP1	
P44				(SCK10)/(SCL10)/ IVCMP0	
P45	7-6-9		Digital input invalid[Note 1]	IVREF0	
P46	8-5-10			(SCK00)/(SCL00)/ SEG26	
P47				(SI00)/(RxD0)/ (SDA00)/SEG27	
P50	7-5-4	I/O	Digital input invalid[Note 1]	SEG4	Port 5. 8-bit I/O port. Input/output can be specified in 1-bit units. Use of an on-chip pull-up resistor can be specified by a software setting at input port. Input of P53 and P55 can be set to TTL input buffer. Output of P53 to P56 can be set to N-ch open-drain output (V_{DD} tolerance). Can be set to LCD output[Note 2].
P51				SEG5	
P52				TI00/TO00/INTP1/ SEG6	
P53	8-5-10			INTP2/SEG7	
P54	7-5-10			TI02/TO02/SEG8	
P55	8-5-10			INTP5/SEG9	
P56	7-5-10			TI06/TO06/SEG10	
P57	7-5-4			INTP6/SEG11	

Notes 1. "Digital input invalid" refers to the state in which all the digital outputs, digital inputs, analog inputs, and LCD outputs are disabled.

2. Digital or LCD for each pin can be selected with the port mode register x (PMx) and the LCD port function register x (PFSEGx) (can be set in 1-bit unit).

3. Digital or analog for each pin can be selected with the port mode control register x (PMCx) (can be set in 1-bit unit).

4. Digital or analog for each pin can be selected with the port mode control register x (PMCx) and the LCD port function register 3 (PFSEG3).

Remark Functions in parentheses in the above figure can be assigned via settings in the peripheral I/O redirection register (PIOR). See **Figure 4-8 Format of Peripheral I/O Redirection Register (PIOR)**.

(3/3)

Function Name	Pin Type	I/O	After Reset Release	Alternate Function	Function
P60	12-1-3	I/O	Input port	SCLA0/(TI01)/(TO01)	Port 6. 2-bit I/O port. Input/output can be specified in 1-bit units. N-ch open-drain output (6 V tolerance).
P61				SDAA0/(TI02)/(TO02)	
P70	7-5-4	I/O	Digital input invalid[Note 1]	KR0/SEG12	Port 7. 8-bit I/O port. Input/output can be specified in 1-bit units. Use of an on-chip pull-up resistor can be specified by a software setting at input port. Can be set to LCD output[Note 2].
P71				KR1/SEG13	
P72				KR2/SEG14	
P73				KR3/SEG15	
P74	7-5-16			KR4/SEG16/TKBO00	
P75				KR5/SEG17/TKBO01-2	
P76				KR6/SEG18/TKBO01-1	
P77				KR7/SEG19/TKBO01-0	
P121	2-2-1	Input	Input port	X1	Port 12. 3-bit I/O port and 4-bit input only port. For P125 to P127, input/output can be specified in 1-bit units. For P125 to P127, use of an on-chip pull-up resistor can be specified by a software setting at input port. P125 to P127 can be set to LCD output[Note 2].
P122				X2/EXCLK	
P123				XT1	
P124				XT2/EXCLKS	
P125	7-5-6	I/O	Digital input invalid[Note 1]	V_{L3}/(TI06)/(TO06)	
P126	7-5-5			CAPL/(TI04)/(TO04)	
P127				CAPH/(TI03)/(TO03)/(REMOOUT)	
P130	7-5-10	I/O	Digital input invalid[Note 1]	(SO00)/(TxD0)/SEG28	Port 13. 1-bit I/O port and 1-bit input only port. For P130, input/output can be specified. For P130, use of an on-chip pull-up resistor can be specified by a software setting at input port. Output of P130 can be set to N-ch open-drain output (V_{DD} tolerance). P130 can be set to LCD output[Note 2].
P137	2-1-2	Input	Input port	INTP0	
$\overline{\text{RESET}}$	2-1-1	Input	–	–	Input only pin for external reset. When external reset is not used, connect this pin to V_{DD} directly or via a resistor.

Notes 1. "Digital input invalid" refers to the state in which all the digital outputs, digital inputs, analog inputs, and LCD outputs are disabled.

2. Digital or LCD for each pin can be selected with the port mode register x (PMx) and the LCD port function register x (PFSEGx) (can be set in 1-bit unit).

Remark Functions in parentheses in the above figure can be assigned via settings in the peripheral I/O redirection register (PIOR). See **Figure 4-8 Format of Peripheral I/O Redirection Register (PIOR)**.

2.2 Functions Other than Port Pins

2.2.1 With functions for each product

(1/2)

Function Name	80-pin	64-pin	Function Name	80-pin	64-pin	Function Name	80-pin	64-pin
ANI0	√	√	REMOOUT	√	√	TKBO00	√	√
ANI1	√	√	$\overline{\text{RESET}}$	√	√	TKBO01-0	√	√
ANI16	√	√	RxD0	√	√	TKBO01-1	√	√
ANI17	√	–	RxD1	√	√	TKBO01-2	√	√
ANI18	√	–	RxD2	√	√	V_{L1}	√	√
ANI19	√	–	RxD3	√	–	V_{L2}	√	√
ANI20	√	√	TxD0	√	√	V_{L3}	√	√
ANI21	√	√	TxD1	√	√	V_{L4}	√	√
ANI22	√	√	TxD2	√	√	CAPH	√	√
ANI23	√	√	TxD3	√	–	CAPL	√	√
ANI24	√	√	SCK00	√	√	X1	√	√
ANI25	√	√	SCK10	√	√	X2	√	√
INTP0	√	√	SI00	√	√	EXCLK	√	√
INTP1	√	√	SI10	√	√	XT1	√	√
INTP2	√	√	SO00	√	√	XT2	√	√
INTP3	√	√	SO10	√	√	EXCLKS	√	√
INTP4	√	√	SCL00	√	√	V_{DD}	√	√
INTP5	√	√	SCL10	√	√	AV_{REFP}	√	√
INTP6	√	√	SDA00	√	√	AV_{REFM}	√	√
INTP7	√	√	SDA10	√	√	V_{SS}	√	√
IVCMP0	√	√	SDAA0	√	√	TOOLRxD	√	√
IVCMP1	√	√	SCLA0	√	√	TOOLTxD	√	√
IVREF0	√	√	TI00	√	√	TOOL0	√	√
IVREF1	√	√	TI01	√	√	COM0	√	√
VCOUT0	√	√	TI02	√	√	COM1	√	√
VCOUT1	√	√	TI03	√	√	COM2	√	√
KR0	√	√	TI04	√	√	COM3	√	√
KR1	√	–	TI05	√	√	COM4	√	√
KR2	√	–	TI06	√	√	COM5	√	√
KR3	√	–	TI07	√	√	COM6	√	√
KR4	√	√	TO00	√	√	COM7	√	√
KR5	√	√	TO01	√	√	SEG0	√	√
KR6	√	√	TO02	√	√	SEG1	√	√
KR7	√	√	TO03	√	√	SEG2	√	√
PCLBUZ0	√	√	TO04	√	√	SEG3	√	√
PCLBUZ1	√	√	TO05	√	√	SEG4	√	–
RTC1HZ	√	√	TO06	√	√	SEG5	√	–
REGC	√	√	TO07	√	√	SEG6	√	√

(2/2)

Function Name	80-pin	64-pin	Function Name	80-pin	64-pin	Function Name	80-pin	64-pin
SEG7	√	√	SEG22	√	√	SEG37	√	√
SEG8	√	√	SEG23	√	√	SEG38	√	√
SEG9	√	–	SEG24	√	–	SEG39	√	√
SEG10	√	–	SEG25	√	–	SEG40	√	√
SEG11	√	√	SEG26	√	–	SEG41	√	√
SEG12	√	√	SEG27	√	–	SEG42	√	√
SEG13	√	–	SEG28	√	–	SEG43	√	√
SEG14	√	–	SEG29	√	√	SEG44	√	√
SEG15	√	–	SEG30	√	–	SEG45	√	√
SEG16	√	√	SEG31	√	–	SEG46	√	√
SEG17	√	√	SEG32	√	–	SEG47	√	√
SEG18	√	√	SEG33	√	√	SEG48	√	√
SEG19	√	√	SEG34	√	√	SEG49	√	√
SEG20	√	√	SEG35	√	√	SEG50	√	√
SEG21	√	√	SEG36	√	√			

2.2.2 Description of Functions

(1/2)

Function Name	I/O	Function
ANI0, ANI1, ANI16 to ANI25	Input	A/D converter analog input (see **Figure 12-38 Analog Input Pin Connection**)
INTP0 to INTP7	Input	External interrupt request input Specified the valid edge: Rising edge, falling edge, or both rising and falling edges
IVCMP0, IVCMP1	Input	Comparator analog voltage input
IVREF0, IVREF1	Input	Comparator reference voltage input
VCOUT0, VCOUT1	Output	Comparator output
KR0 to KR7	Input	Key interrupt input
PCLBUZ0, PCLBUZ1	Output	Clock output/buzzer output
REGC	–	Pin for connecting regulator output stabilization capacitance for internal operation. Connect this pin to V_{SS} via a capacitor (0.47 to 1 µF). Also, use a capacitor with good characteristics, since it is used to stabilize internal voltage.
REMOOUT	Output	Remote controller output
RTC1HZ	Output	Real-time clock 2 correction clock (1 Hz) output
$\overline{\text{RESET}}$	Input	This is the active-low system reset input pin. When the external reset pin is not used, connect this pin directly or via a resistor to V_{DD}.
RxD0 to RxD3	Input	Serial data input pins of serial interface UART0 to UART3
TxD0 to TxD3	Output	Serial data output pins of serial interface UART0 to UART3
SCK00, SCK10	I/O	Serial clock I/O pins of serial interface CSI00 and CSI10
SI00, SI10	Input	Serial data input pins of serial interface CSI00 and CSI10
SO00, SO10	Output	Serial data output pins of serial interface CSI00 and CSI10
SCL00, SCL10	Output	Serial clock output pins of serial interface IIC00 and IIC10
SDA00, SDA10	I/O	Serial data I/O pins of serial interface IIC00 and IIC10
SCLA0	I/O	Serial clock I/O pins of serial interface IICA0
SDAA0	I/O	Serial data I/O pins of serial interface IICA0
TI00 to TI07	Input	The pins for inputting an external count clock/capture trigger to 16-bit timers 00 to 07
TO00 to TO07	Output	Timer output pins of 16-bit timers 00 to 07
TKBO00, TKBO01-0, TKBO01-1, TKBO01-2	Output	Timer output pins of 16-bit timer KB20
V_{L1} to V_{L4}	–	LCD drive voltage
CAPH, CAPL	–	Connecting a capacitor for LCD controller/driver
X1, X2	–	Resonator connection for main system clock
EXCLK	Input	External clock input for main system clock
XT1, XT2	–	Resonator connection for subsystem clock
EXCLKS	Input	External clock input for subsystem clock

(2/2)

Function Name	I/O	Function
V_{DD}	–	Positive power supply for all pins
AV_{REFP}	Input	A/D converter reference potential (+ side) input
AV_{REFM}	Input	A/D converter reference potential (– side) input
V_{SS}	–	Ground potential for all pins
TOOLRxD	Input	UART reception pin for the external device connection used during flash memory programming
TOOLTxD	Output	UART transmission pin for the external device connection used during flash memory programming
TOOL0	I/O	Data I/O for flash memory programmer/debugger
COM0 to COM7	Output	LCD controller/driver common signal outputs
SEG0 to SEG50	Output	LCD controller/driver segment signal outputs

Caution After reset release, the relationships between P40/TOOL0 and the operating mode are as follows.

Table 2-1. Relationships Between P40/TOOL0 and Operation Mode After Reset Release

P40/TOOL0	Operating Mode
V_{DD}	Normal operation mode
0 V	Flash memory programming mode

For details, see 28.4 Serial Programming Method.

Remark Use bypass capacitors (about 0.1 μF) as noise and latch up countermeasures with relatively thick wires at the shortest distance to V_{DD} to V_{SS} lines.

2.3 Connection of Unused Pins

Table 2-2 shows the connections of unused pins.

Remark The pins mounted depend on the product. See **1.3 Pin Configuration (Top View)** and **2.1 Port Function.**

Table 2-2. Connection of Unused Pins (1/3)

Pin Name	I/O	Recommended Connection of Unused Pins
P00/SEG43/SO00/TxD0/TOOLTxD	I/O	<When setting to port I/O> Input: Independently connect to V_{DD} or V_{SS} via a resistor. Output: Leave open. <When setting to segment output> Leave open.
P01/(TI05)/(TO05)/(INTP5)/PCLBUZ1/SEG44		
P02/INTP7/PCLBUZ0/SEG45		
P03/RxD2/SEG46/VCOUT0		
P04/TxD2/SEG47/VCOUT1		
P05/SCK10/SCL10/SEG48		
P06/SI10/RxD1/SDA10/SEG49		
P07/SO10/TxD1/(PCLBUZ0)/SEG50		
P10/ANI22/SEG35		<When setting to port I/O> Input: Independently connect to V_{DD} or V_{SS} via a resistor. Output: Leave open. <When setting to segment output> Leave open.
P11/ANI23/SEG36		
P12/ANI24/SEG37		
P13/ANI25/SEG38		
P14/TI04/TO04/SEG39		
P15/TI07/TO07/SEG40		
P16/SEG41/SCK00/SCL00		
P17/SEG42/SI00/RxD0/TOOLRxD/SDA00		
P20/ANI1/AV_{REFM}		Input: Independently connect to V_{DD} or V_{SS} via a resistor. Output: Leave open.
P21/ANI0/AV_{REFP}		
P22/ANI16/SEG29		<When setting to port I/O> Input: Independently connect to V_{DD} or V_{SS} via a resistor. Output: Leave open. <When setting to segment output> Leave open.
P23/ANI17/SEG30		
P24/ANI18/SEG31		
P25/ANI19/SEG32		
P26/ANI20/SEG33		
P27/ANI21/SEG34		

Remark Functions in parentheses in the above figure can be assigned via settings in the peripheral I/O redirection register (PIOR).

Table 2-2. Connection of Unused Pins (2/3)

Pin Name	I/O	Recommended Connection of Unused Pins
P30/TI03/TO03/SEG20/REMOOUT	I/O	<When setting to port I/O> Input: Independently connect to V_{DD} or V_{SS} via a resistor. Output: Leave open. <When setting to segment output> Leave open.
P31/INTP3/RTC1HZ/SEG21		
P32/TI01/TO01/SEG22		
P33/INTP4/SEG23		
P34/RxD3/SEG24		
P35/TxD3/SEG25		
P40/TOOL0/(TI00)/(TO00)		Input: Independently connect to V_{DD} or leave open. Output: Leave open.
P41/(TI07)/(TO07)		Input: Independently connect to V_{DD} or V_{SS} via a resistor. Output: Leave open.
P42/TI05/TO05/(SO10)/(TxD1)/IVREF1		
P43/(INTP7)/(SI10)/(RxD1)/(SDA10)/IVCMP1		
P44/(SCK10)/(SCL10)/IVCMP0		
P45/IVREF0		
P46/(SCK00)/(SCL00)/SEG26		<When setting to port I/O> Input: Independently connect to V_{DD} or V_{SS} via a resistor. Output: Leave open. <When setting to segment output> Leave open.
P47/(SI00)/(RxD0)/(SDA00)/SEG27		
P50/SEG4		<When setting to port I/O> Input: Independently connect to V_{DD} or V_{SS} via a resistor. Output: Leave open. <When setting to segment output> Leave open.
P51/SEG5		
P52/TI00/TO00/INTP1/SEG6		
P53/INTP2/SEG7		
P54/TI02/TO02/SEG8		
P55/INTP5/SEG9		
P56/TI06/TO06/SEG10		
P57/INTP6/SEG11		
P60/SCLA0/(TI01)/(TO01)		Input: Independently connect to V_{DD} or V_{SS} via a resistor. Output: Set the port's output latch to 0 and leave the pins open, or set the port's output latch to 1 and independently connect the pins to V_{DD} or V_{SS} via a resistor.
P61/SDAA0/(TI02)/(TO02)		
P70/KR0/SEG12		<When setting to port I/O> Input: Independently connect to V_{DD} or V_{SS} via a resistor. Output: Leave open. <When setting to segment output> Leave open.
P71/KR1/SEG13		
P72/KR2/SEG14		
P73/KR3/SEG15		
P74/KR4/SEG16/TKBO00		
P75/KR5/SEG17/TKBO01-2		
P76/KR6/SEG18/TKBO01-1		
P77/KR7/SEG19/TKBO01-0		

Remark Functions in parentheses in the above figure can be assigned via settings in the peripheral I/O redirection register (PIOR).

Table 2-2. Connection of Unused Pins (3/3)

Pin Name	I/O	Recommended Connection of Unused Pins
P121/X1	Input	Independently connect to V_{DD} or V_{SS} via a resistor.
P122/X2/EXCLK		
P123/XT1		
P124/XT2/EXCLKS		
P125/V_{L3}/(TI06)/(TO06)	I/O	Input: Independently connect to V_{DD} or V_{SS} via a resistor. Output: Leave open.
P126/CAPL/(TI04)/(TO04)		
P127/CAPH/(TI03)/(TO03)/(REMOOUT)		
P130/(SO00)/(TxD0)/SEG28		<When setting to port I/O> Input: Independently connect to V_{DD} or V_{SS} via a resistor. Output: Leave open. <When setting to segment output> Leave open.
P137/INTP0	Input	Independently connect to V_{DD} or V_{SS} via a resistor.
$\overline{\text{RESET}}$	Input	Connect directly or via a resistor to V_{DD}.
REGC	–	Connect to V_{SS} via capacitor (0.47 to 1 µF).
COM0 to COM3	Output	Leave open.
COM4/SEG0		
COM5/SEG1		
COM6/SEG2		
COM7/SEG3		
V_{L1}	–	
V_{L2}	–	
V_{L4}	–	

Remark Functions in parentheses in the above figure can be assigned via settings in the peripheral I/O redirection register (PIOR).

2.4 Block Diagrams of Pins

Figures 2-1 to 2-16 show the block diagrams of the pins described in **2.1.1 64-pin products** and **2.1.2 80-pin products**.

Figure 2-1. Pin Block Diagram for Pin Type 2-1-1

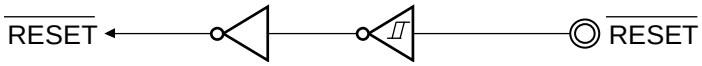

Figure 2-2. Pin Block Diagram for Pin Type 2-1-2

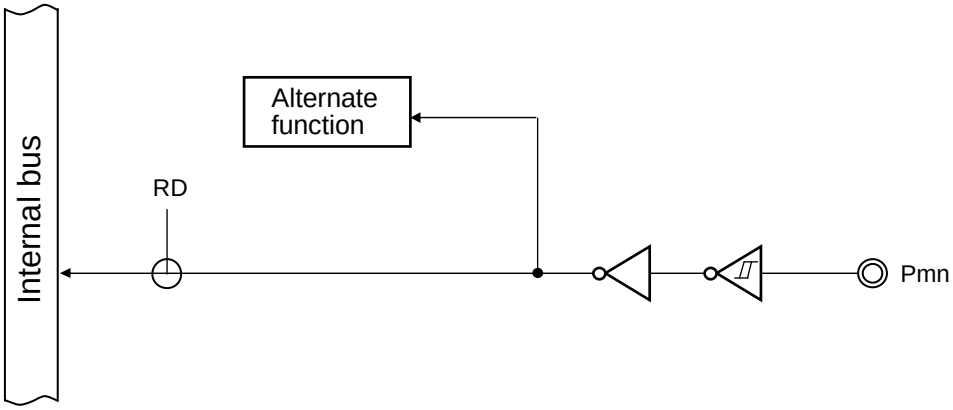

Remark For alternate functions, see **2.1 Port Function**.

Figure 2-3. Pin Block Diagram for Pin Type 2-2-1

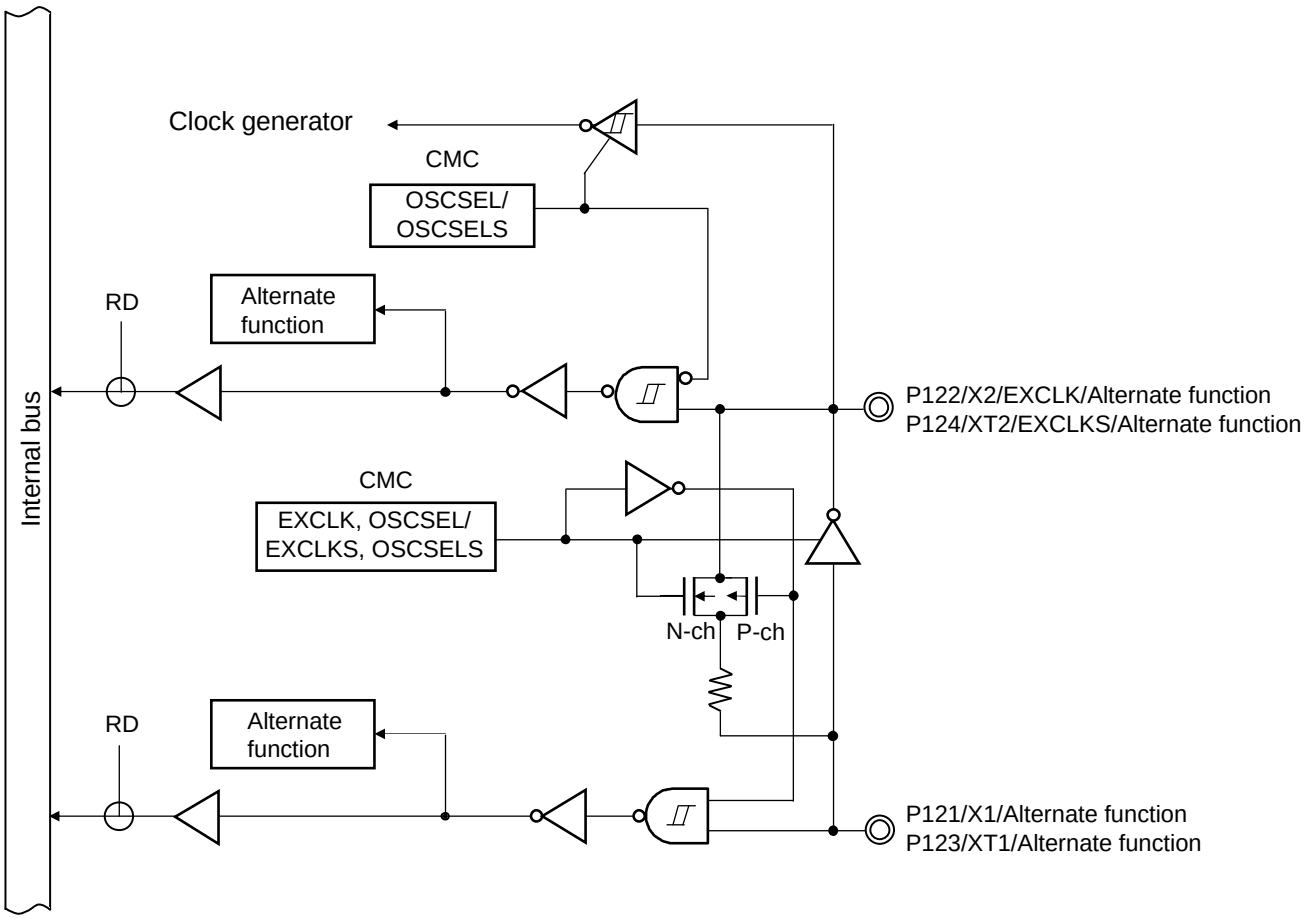

Remark For alternate functions, see **2.1 Port Function**.

Figure 2-4. Pin Block Diagram for Pin Type 4-3-3

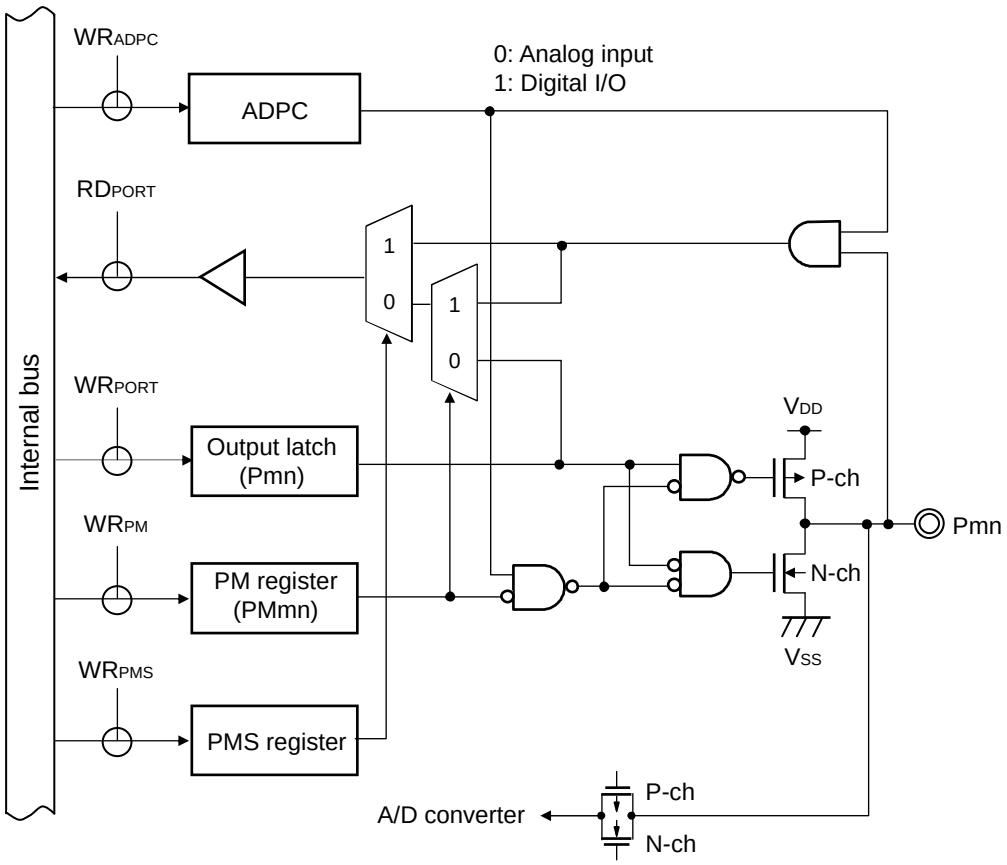

Figure 2-5. Pin Block Diagram for Pin Type 7-1-3

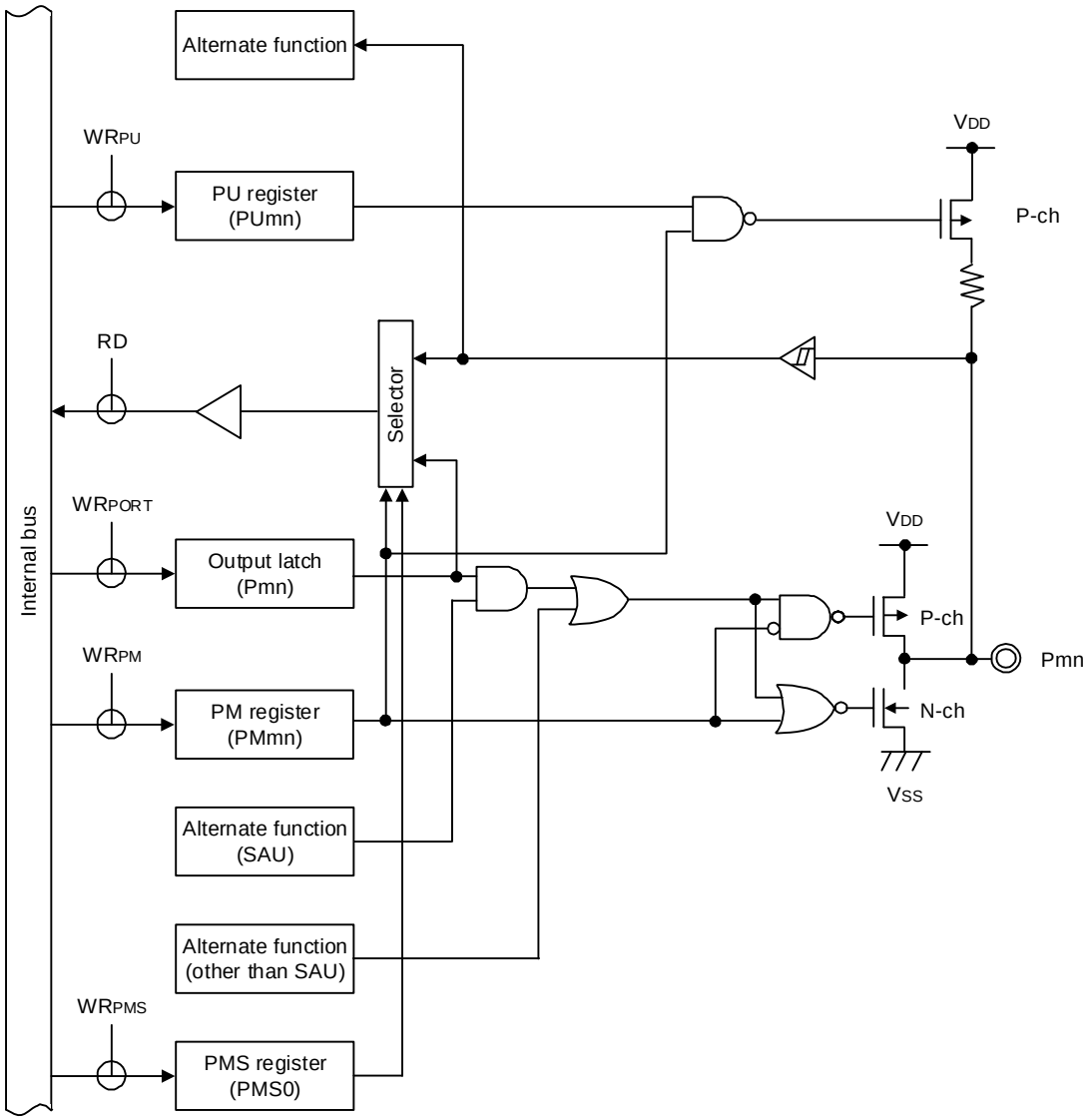

Remarks 1. For alternate functions, see **2.1 Port Function**.

2. SAU: Serial array unit

Figure 2-6. Pin Block Diagram for Pin Type 7-5-4

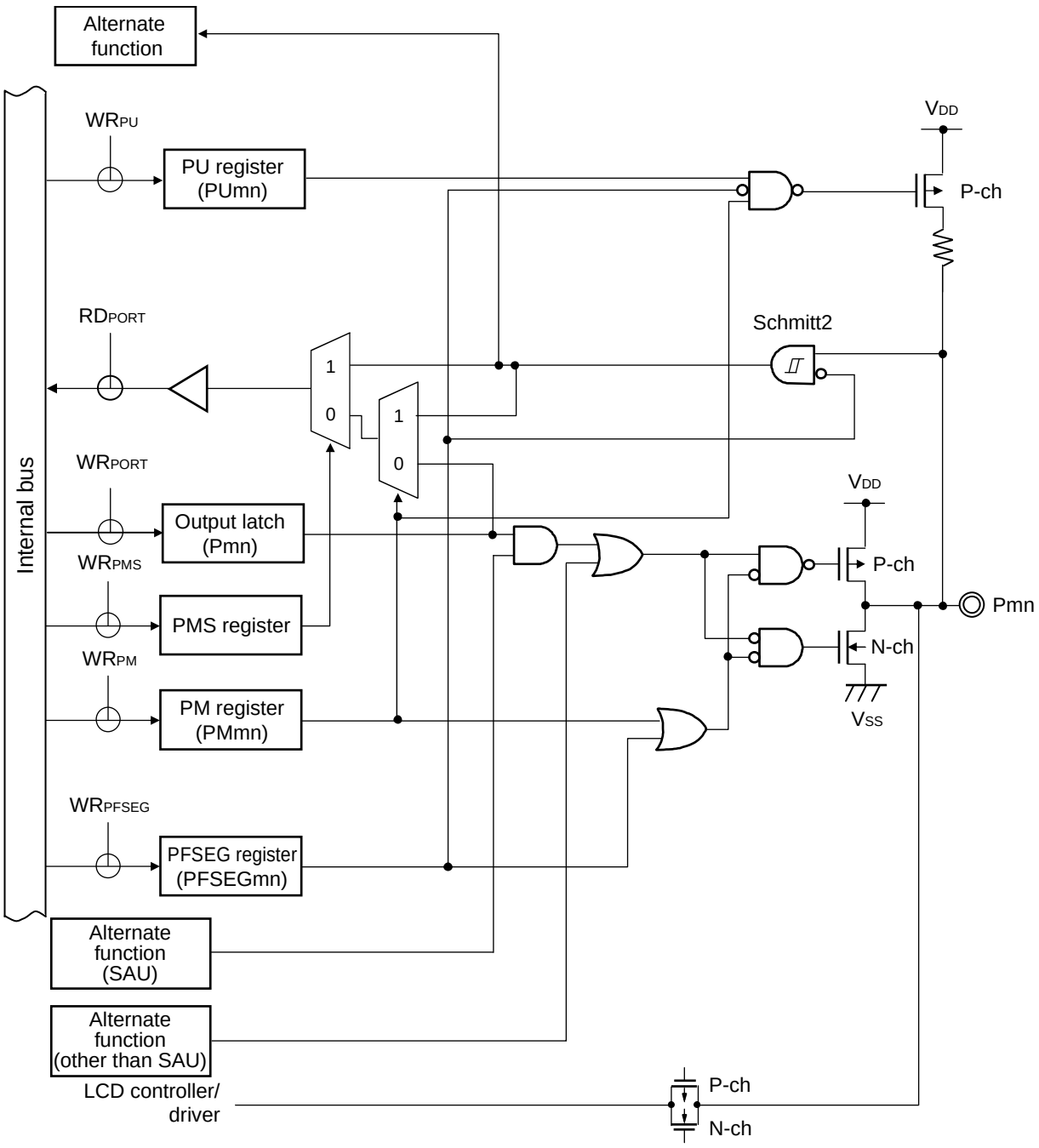

Remarks 1. For alternate functions, see **2.1 Port Function**.

2. SAU: Serial array unit

Figure 2-7. Pin Block Diagram for Pin Type 7-5-5

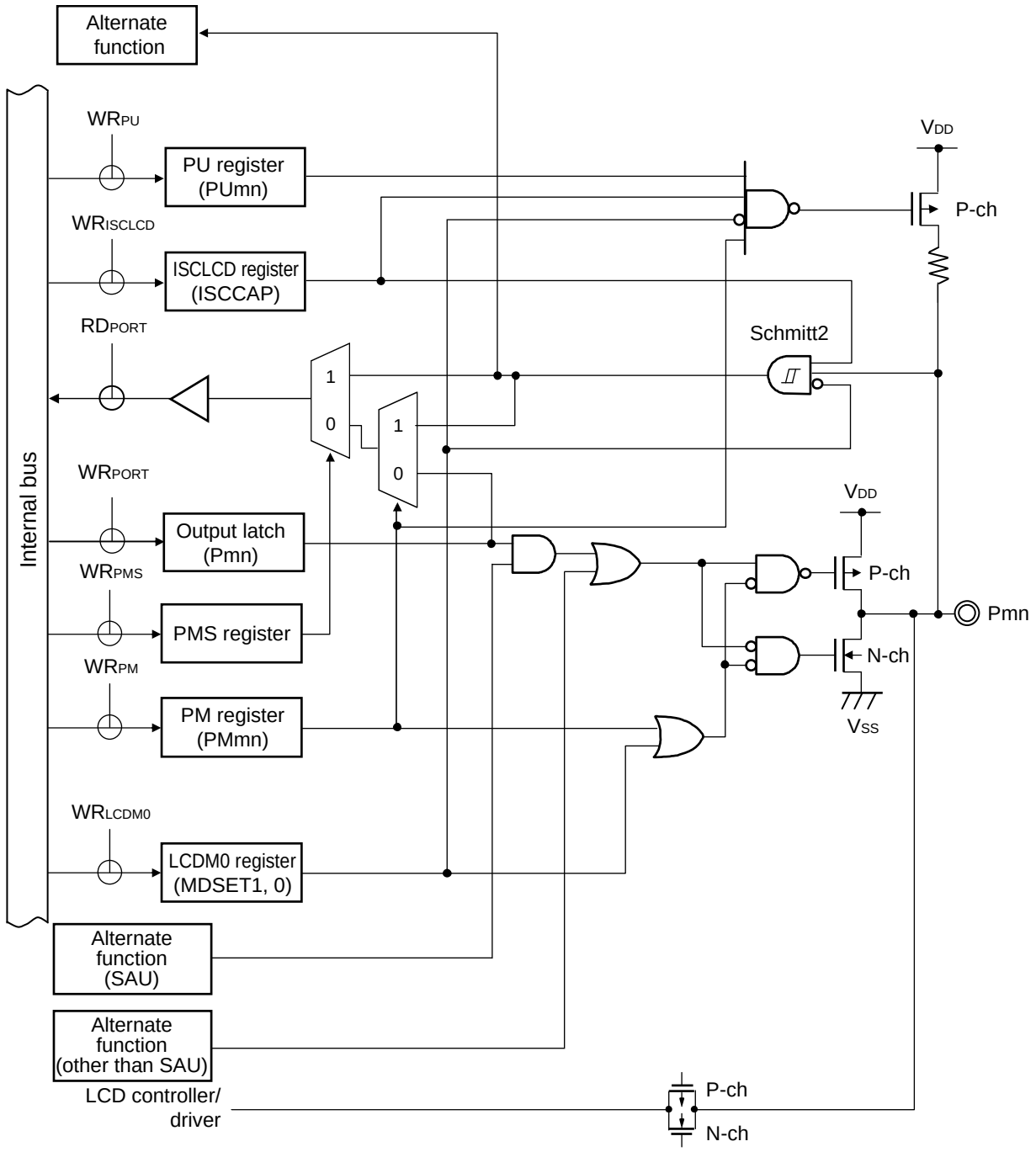

Remarks 1. For alternate functions, see **2.1 Port Function**.

2. SAU: Serial array unit

Figure 2-8. Pin Block Diagram for Pin Type 7-5-6

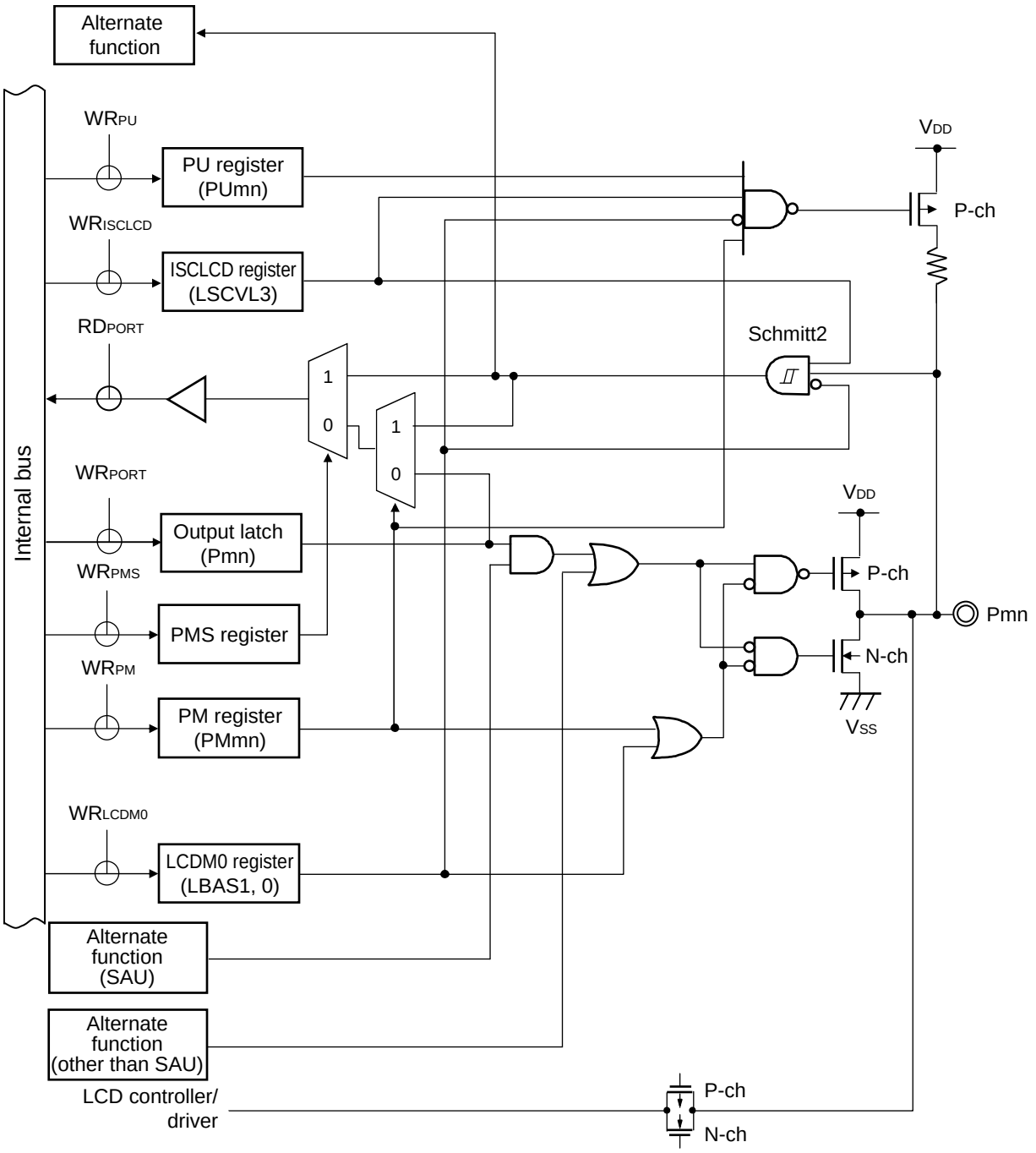

Remarks 1. For alternate functions, see **2.1 Port Function**.

2. SAU: Serial array unit

Figure 2-9. Pin Block Diagram for Pin Type 7-5-10

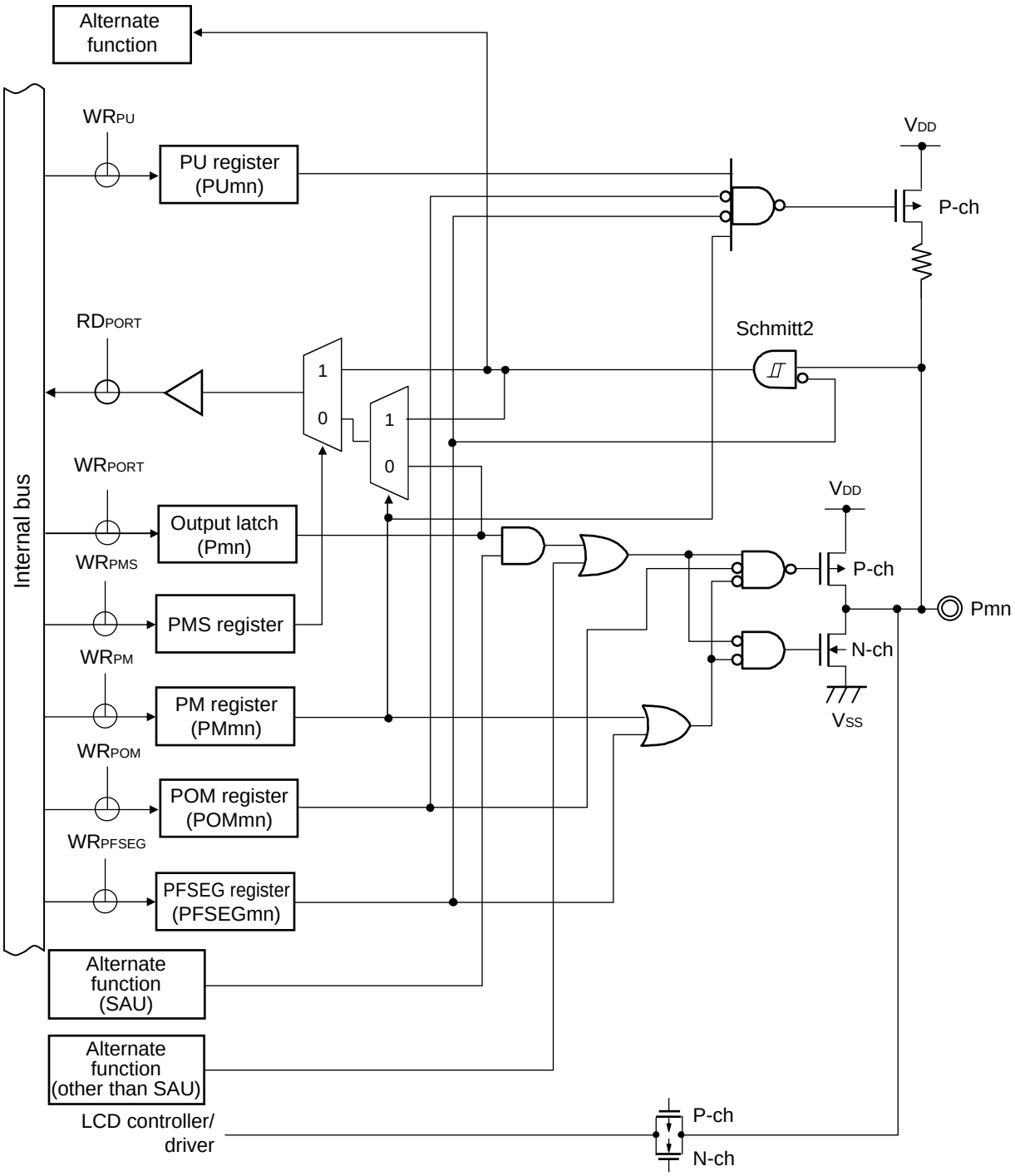

Caution A through current may flow through if the pin is in the intermediate potential, because the input buffer is also turned on when the pin is in N-ch open-drain output mode by port output mode register (POMx).

Remarks 1. For alternate functions, see **2.1 Port Function**.

2. SAU: Serial array unit

Figure 2-10. Pin Block Diagram for Pin Type 7-5-16

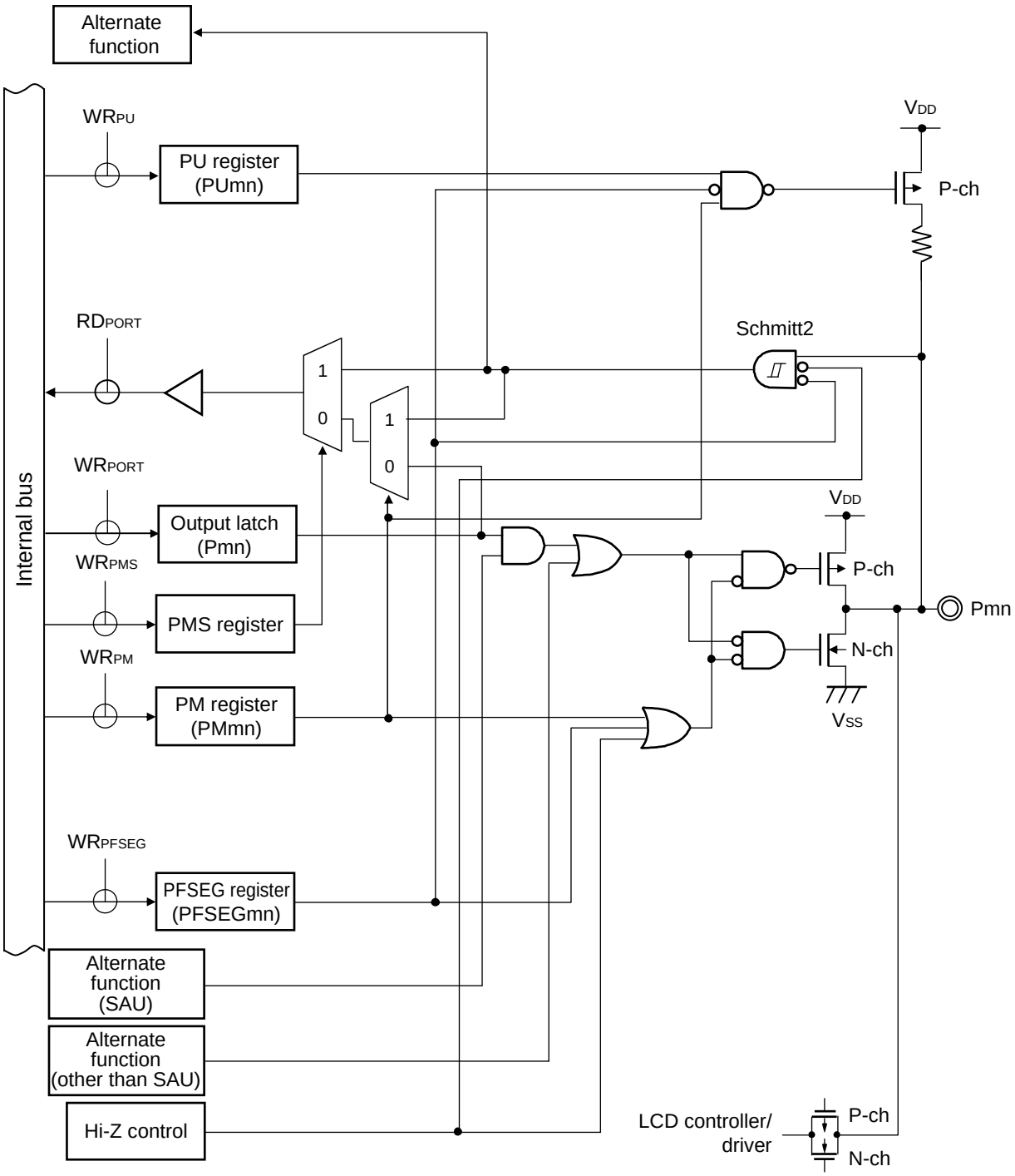

Remarks 1. For alternate functions, see **2.1 Port Function**.

2. SAU: Serial array unit

Figure 2-11. Pin Block Diagram for Pin Type 7-6-4

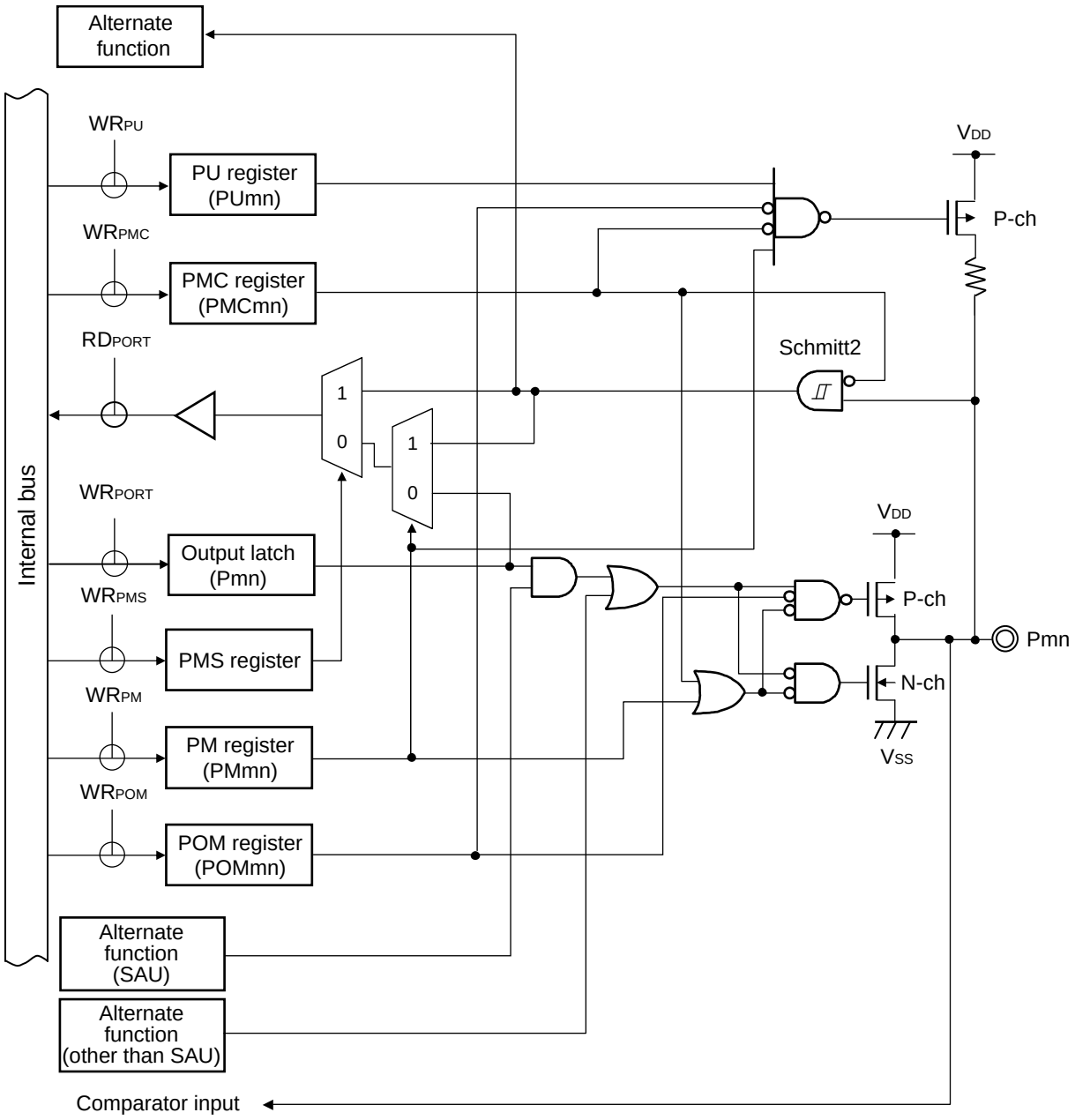

Caution A through current may flow through if the pin is in the intermediate potential, because the input buffer is also turned on when the pin is in N-ch open-drain output mode by port output mode register (POMx).

Remarks 1. For alternate functions, see **2.1 Port Function**.

2. SAU: Serial array unit

Figure 2-12. Pin Block Diagram for Pin Type 7-6-9

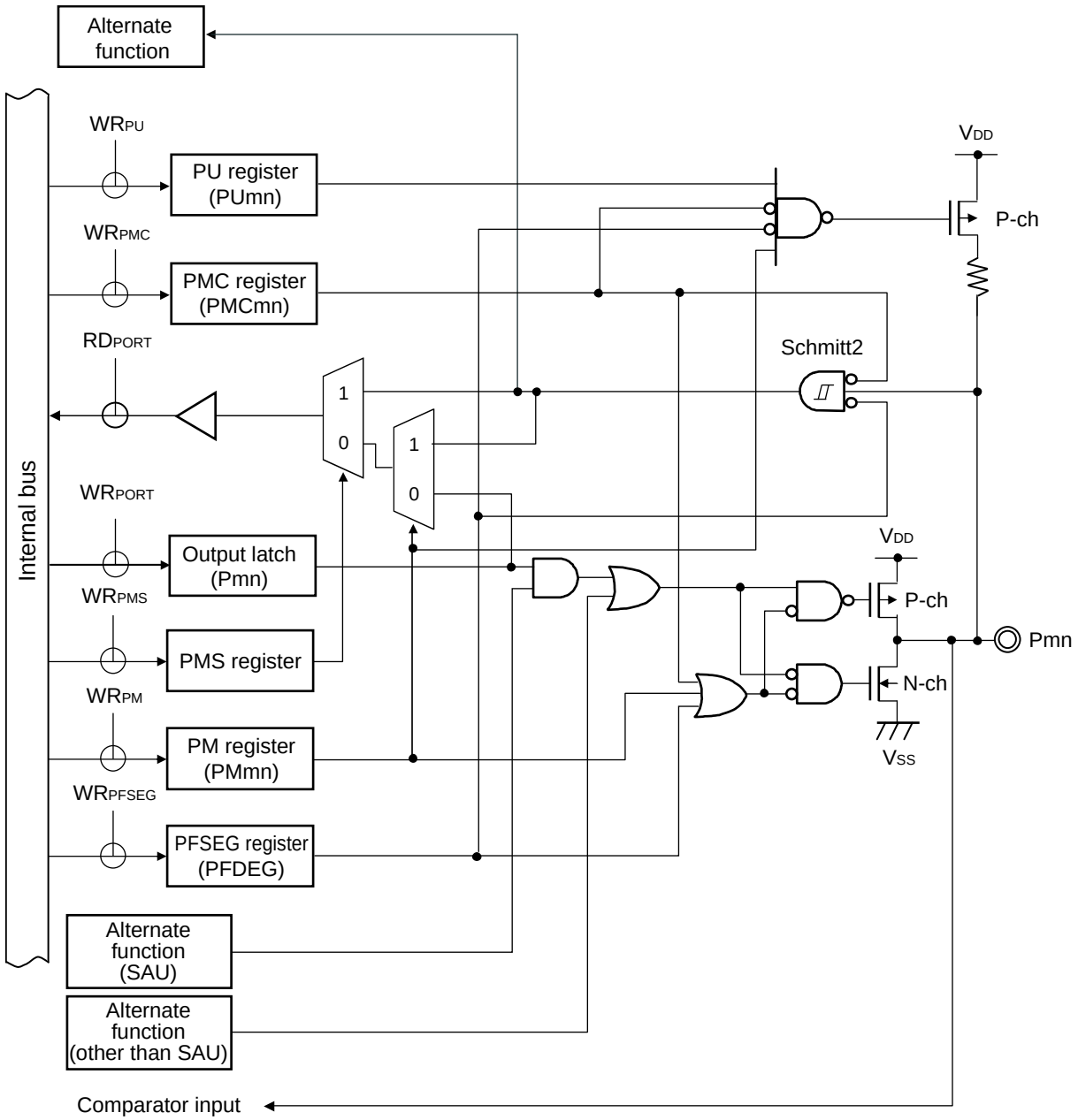

Remarks 1. For alternate functions, see **2.1 Port Function**.

2. SAU: Serial array unit

Figure 2-13. Pin Block Diagram for Pin Type 7-10-3

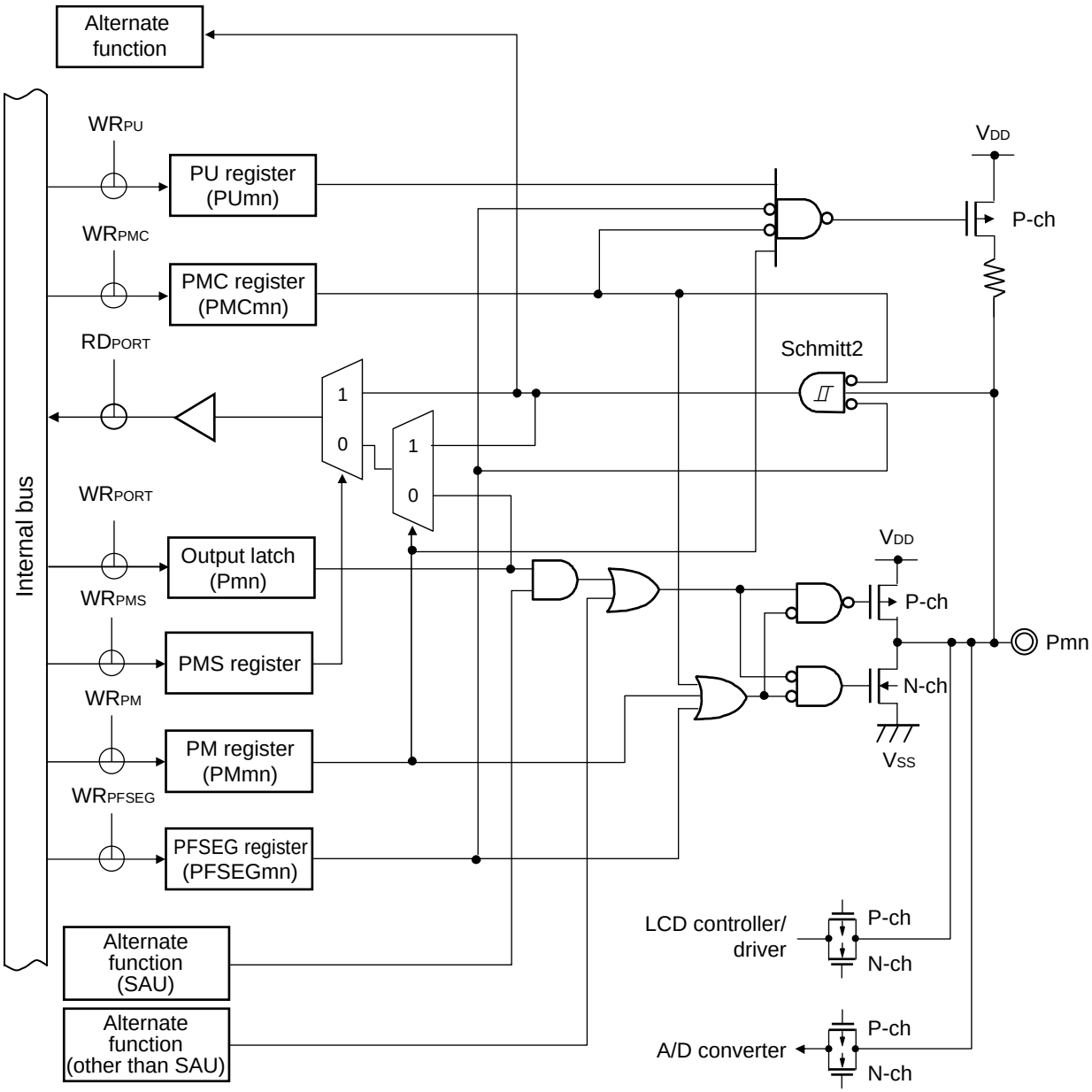

Remarks 1. For alternate functions, see **2.1 Port Function**.

2. SAU: Serial array unit

Figure 2-14. Pin Block Diagram for Pin Type 8-5-4

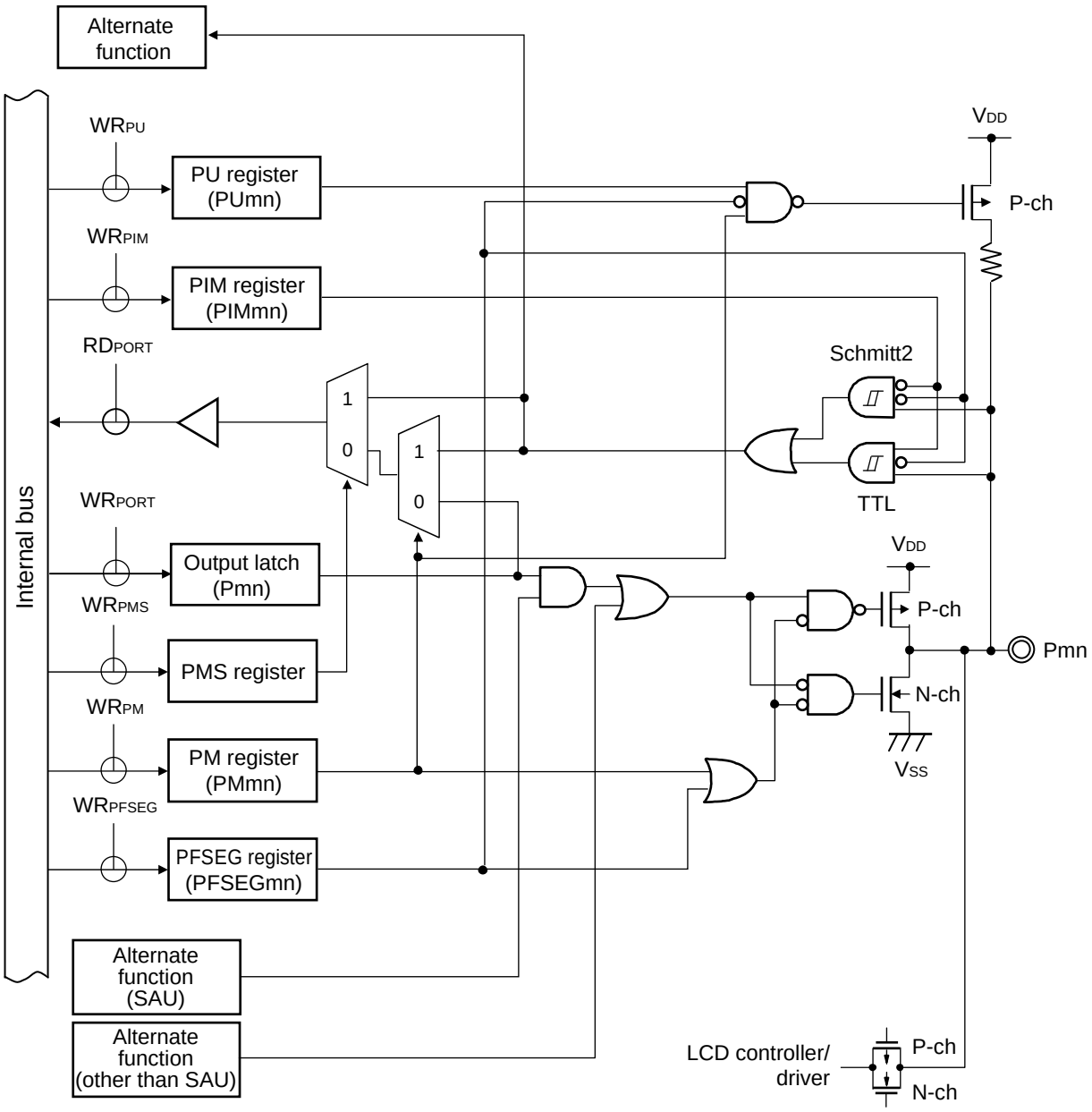

Caution **Because of TTL input buffer structure, if the port input mode register (PIMx) is set in TTL input buffer, a through current may flow through in the case of high level input. It is recommended to input a low level to prevent a through current.**

Remarks 1. For alternate functions, see **2.1 Port Function**.

2. SAU: Serial array unit

Figure 2-15. Pin Block Diagram for Pin Type 8-5-10

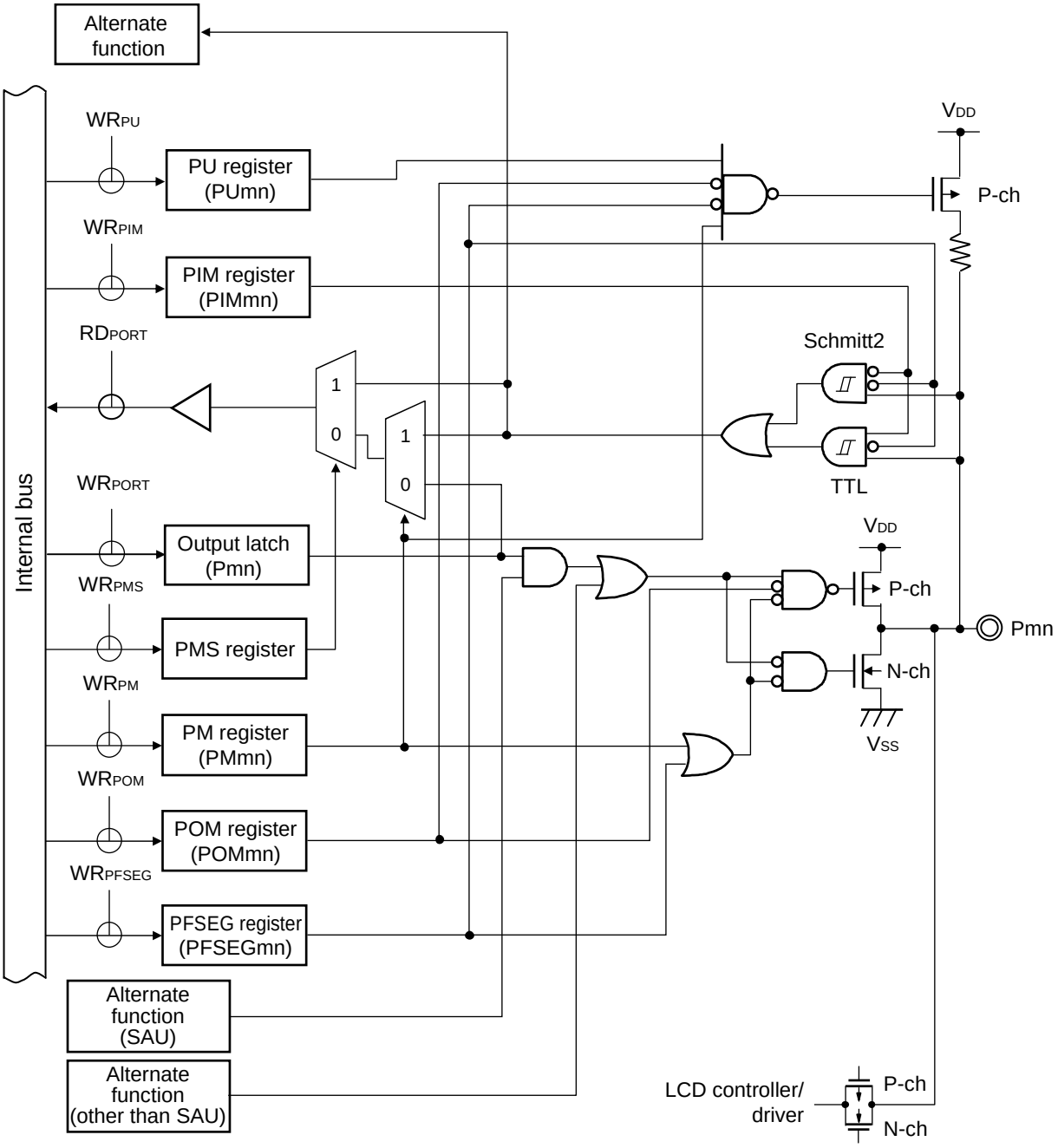

Cautions 1. A through current may flow through if the pin is in the intermediate potential, because the input buffer is also turned on when the pin is in N-ch open-drain output mode by port output mode register (POMx).

2. Because of TTL input buffer structure, if the port input mode register (PIMx) is set in TTL input buffer, a through current may flow through in the case of high level input. It is recommended to input a low level to prevent a through current.

Remarks 1. For alternate functions, see **2.1 Port Function**.

2. SAU: Serial array unit

Figure 2-16. Pin Block Diagram for Pin Type 8-6-4

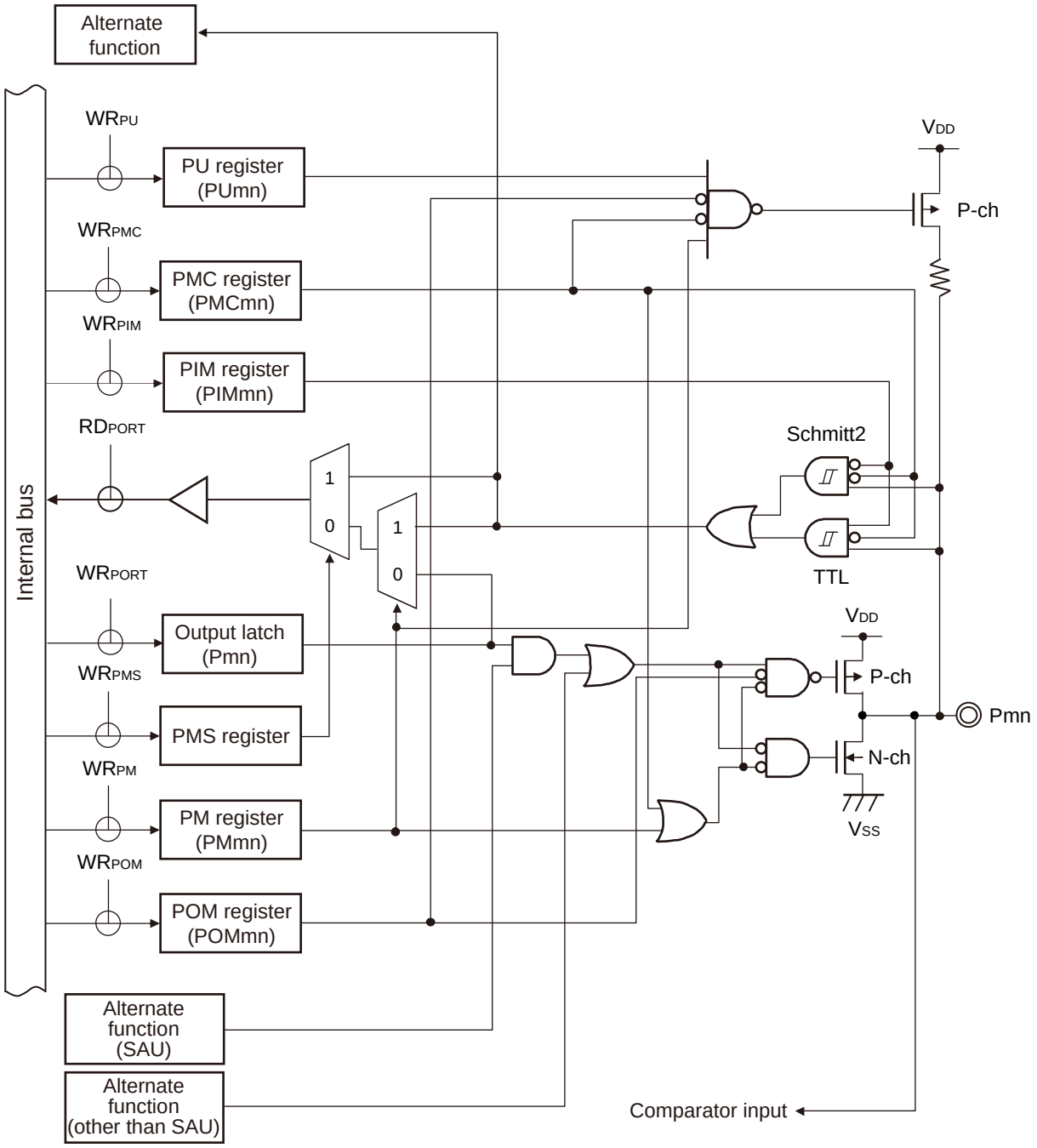

Cautions 1. A through current may flow through if the pin is in the intermediate potential, because the input buffer is also turned on when the pin is in N-ch open-drain output mode by port output mode register (POMx).

2. Because of TTL input buffer structure, if the port input mode register (PIMx) is set in TTL input buffer, a through current may flow through in the case of high level input. It is recommended to input a low level to prevent a through current.

Remarks 1. For alternate functions, see **2.1 Port Function**.

2. SAU: Serial array unit

Figure 2-17. Pin Block Diagram for Pin Type 12-1-3

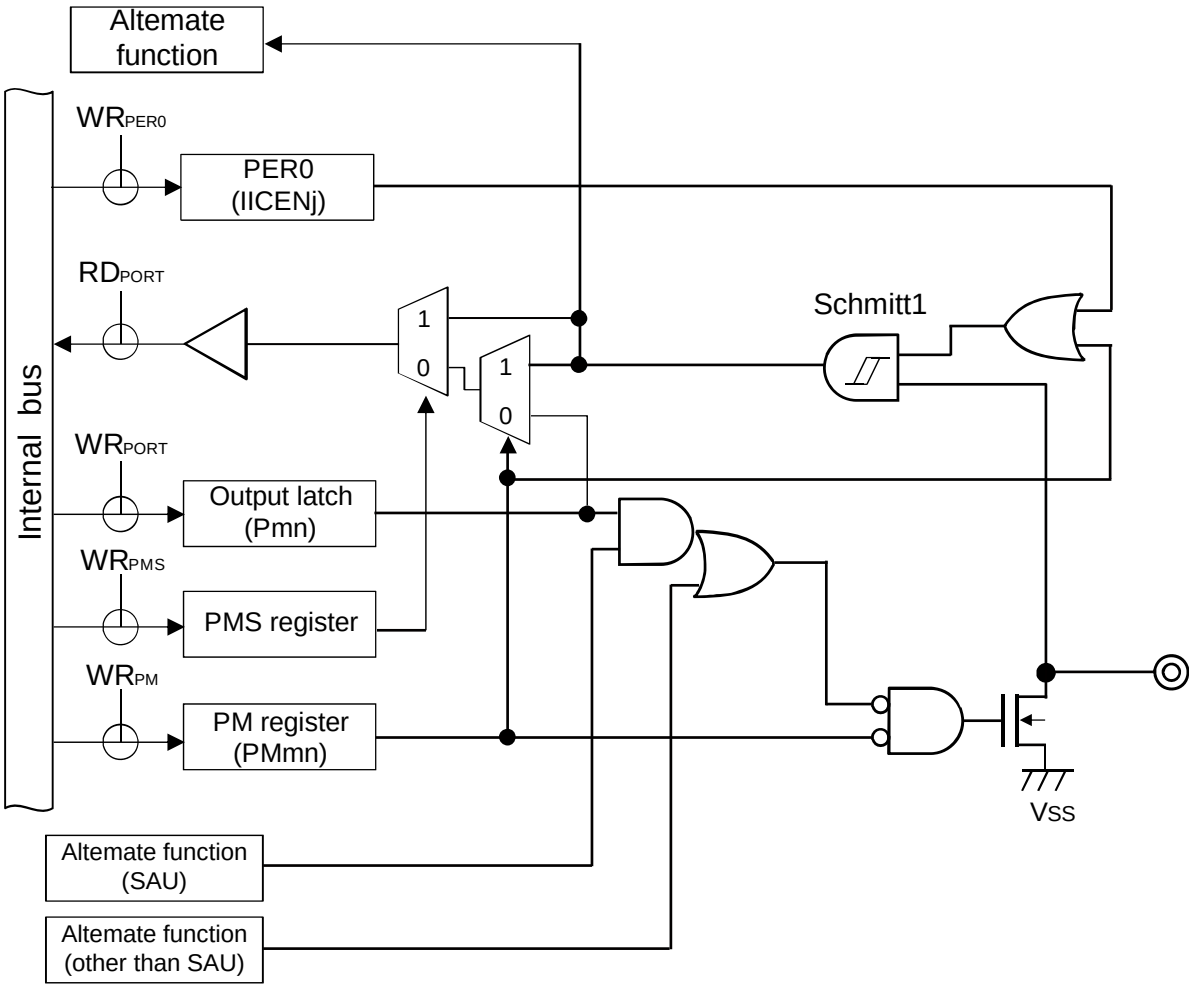

Remarks 1. For alternate functions, see **2.1 Port Function**.

2. SAU: Serial array unit

CHAPTER 3 CPU ARCHITECTURE

3.1 Memory Space

Products in the RL78/L13 can access a 1 MB memory space. Figures 3-1 to 3-6 show the memory maps.

Figure 3-1. Memory Map (R5F10WLA, R5F10WMA)

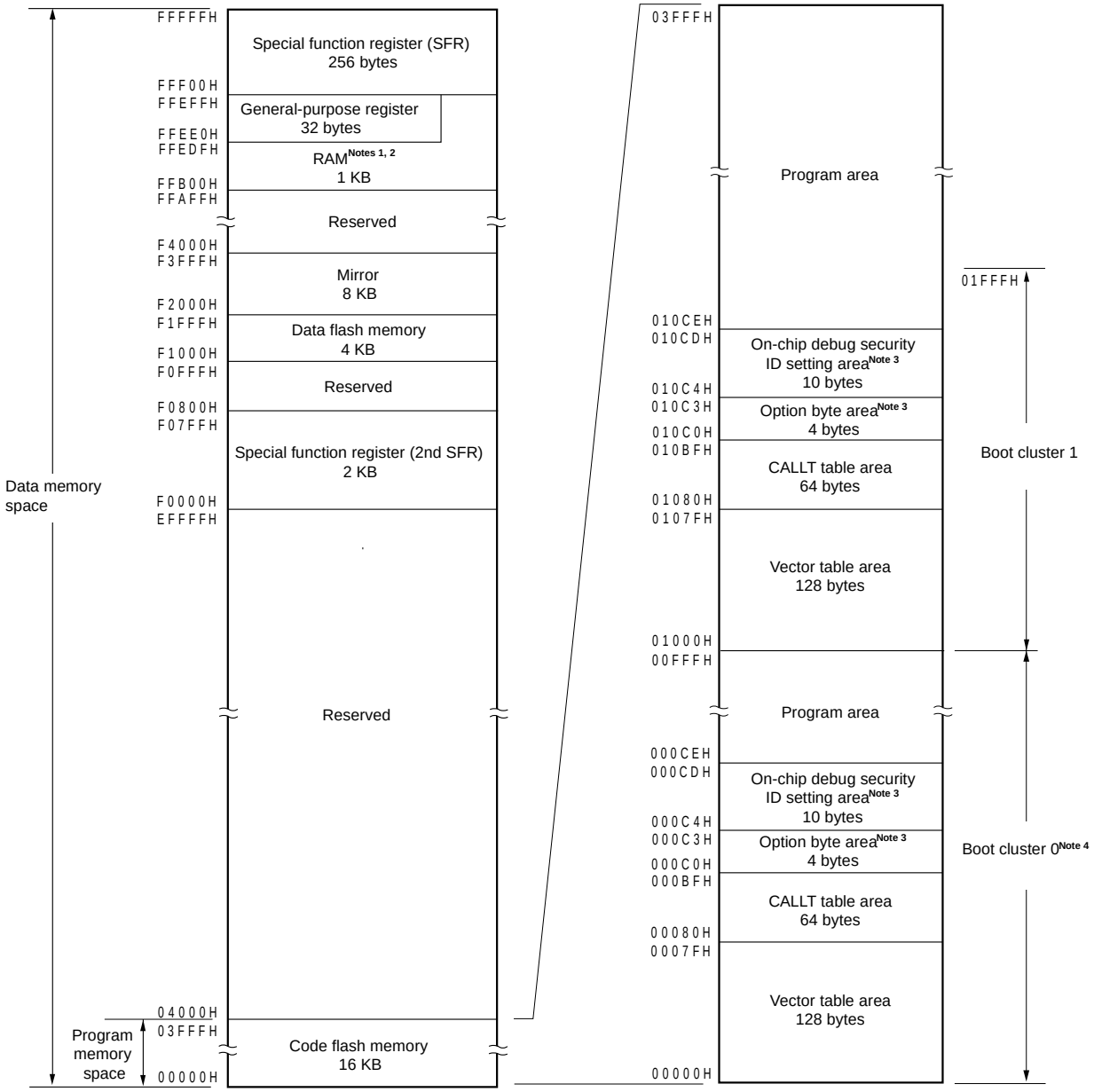

Notes 1. Do not allocate RAM addresses which are used as a stack area, a data buffer, a branch destination of vector interrupt processing, and a DMA transfer destination/transfer source to the area FFE20H to FFEDFH when performing self-programming and rewriting the data flash memory.

2. Instructions can be executed from the RAM area excluding the general-purpose register area.

3. When boot swap is not used: Set the option bytes to 000C0H to 000C3H, and the on-chip debug security IDs to 000C4H to 000CDH.

When boot swap is used: Set the option bytes to 000C0H to 000C3H and 010C0H to 010C3H, and the on-chip debug security IDs to 000C4H to 000CDH and 010C4H to 010CDH.

4. Writing boot cluster 0 can be prohibited depending on the setting of security (see **28.7 Security Settings**).

Caution While RAM parity error resets are enabled (RPERDIS = 0), be sure to initialize RAM areas where data access is to proceed and the RAM area + 10 bytes when instructions are fetched from RAM areas, respectively.

Reset signal generation sets RAM parity error resets to enabled (RPERDIS = 0). For details, see 25.3.3 RAM parity error detection function.

Figure 3-2. Memory Map (R5F10WLC, R5F10WMC)

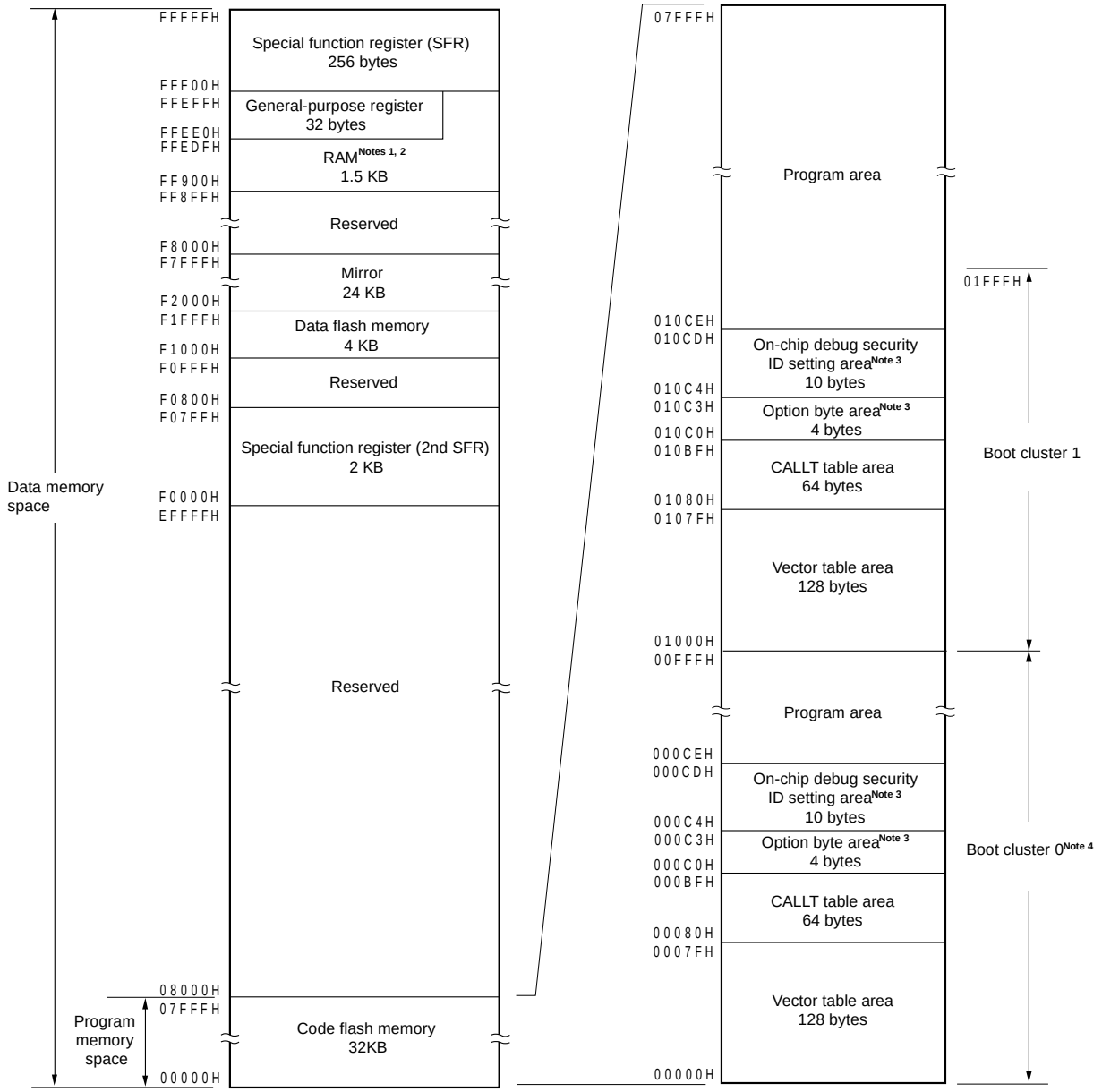

Notes 1. Do not allocate RAM addresses which are used as a stack area, a data buffer, a branch destination of vector interrupt processing, and a DMA transfer destination/transfer source to the area FFE20H to FFEDFH when performing self-programming and rewriting the data flash memory.

2. Instructions can be executed from the RAM area excluding the general-purpose register area.

3. When boot swap is not used: Set the option bytes to 000C0H to 000C3H, and the on-chip debug security IDs to 000C4H to 000CDH.

When boot swap is used: Set the option bytes to 000C0H to 000C3H and 010C0H to 010C3H, and the on-chip debug security IDs to 000C4H to 000CDH and 010C4H to 010CDH.

4. Writing boot cluster 0 can be prohibited depending on the setting of security (see **28.7 Security Settings**).

Caution While RAM parity error resets are enabled (RPERDIS = 0), be sure to initialize RAM areas where data access is to proceed and the RAM area + 10 bytes when instructions are fetched from RAM areas, respectively.

Reset signal generation sets RAM parity error resets to enabled (RPERDIS = 0). For details, see 25.3.3 RAM parity error detection function.

Figure 3-3. Memory Map (R5F10WLD, R5F10WMD)

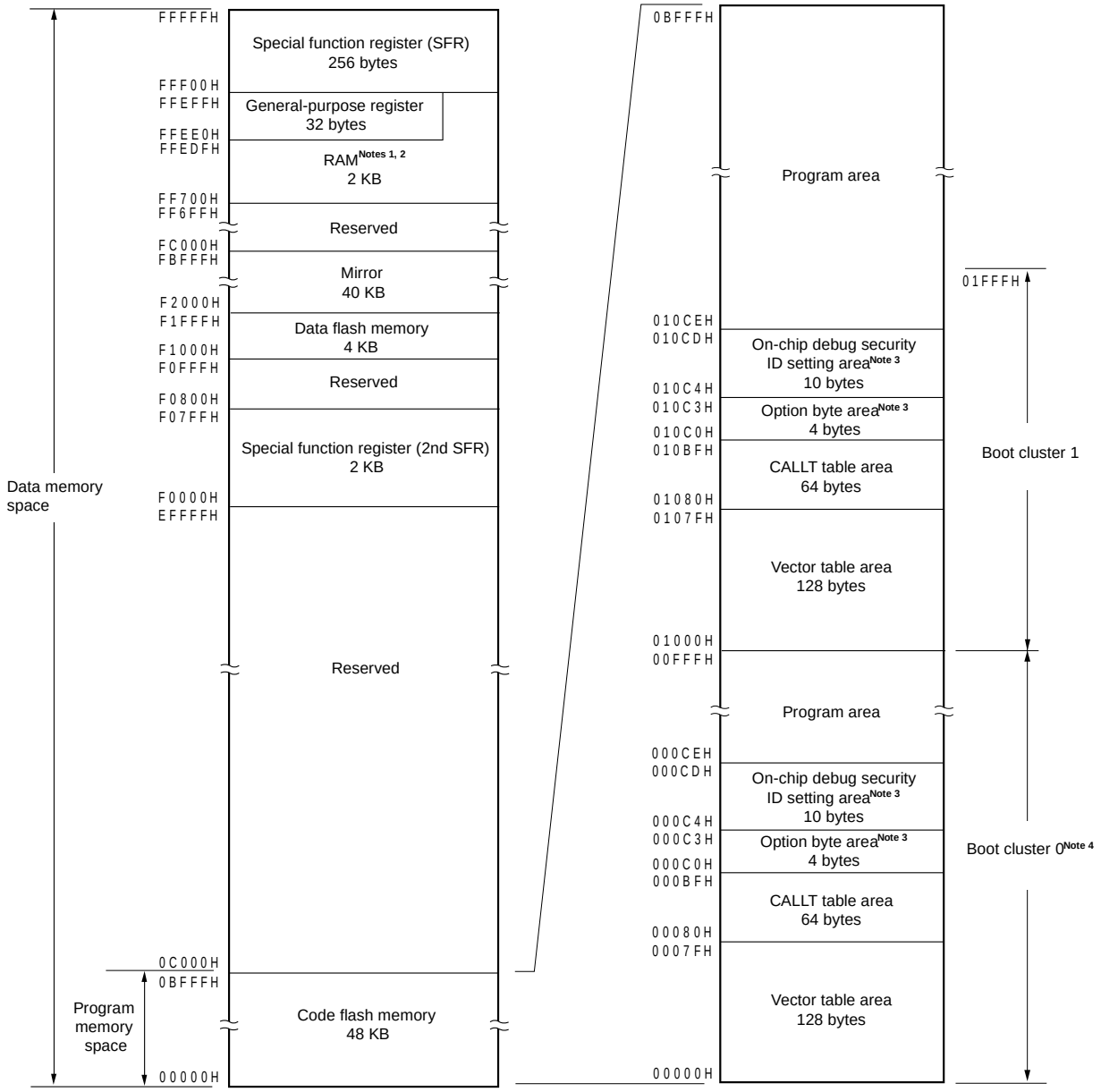

Notes 1. Do not allocate RAM addresses which are used as a stack area, a data buffer, a branch destination of vector interrupt processing, and a DMA transfer destination/transfer source to the area FFE20H to FFEDFH when performing self-programming and rewriting the data flash memory.

2. Instructions can be executed from the RAM area excluding the general-purpose register area.

3. When boot swap is not used: Set the option bytes to 000C0H to 000C3H, and the on-chip debug security IDs to 000C4H to 000CDH.

When boot swap is used: Set the option bytes to 000C0H to 000C3H and 010C0H to 010C3H, and the on-chip debug security IDs to 000C4H to 000CDH and 010C4H to 010CDH.

4. Writing boot cluster 0 can be prohibited depending on the setting of security (see **28.7 Security Settings**).

Caution While RAM parity error resets are enabled (RPERDIS = 0), be sure to initialize RAM areas where data access is to proceed and the RAM area + 10 bytes when instructions are fetched from RAM areas, respectively.

Reset signal generation sets RAM parity error resets to enabled (RPERDIS = 0). For details, see 25.3.3 RAM parity error detection function.

Figure 3-4. Memory Map (R5F10WLE, R5F10WME)

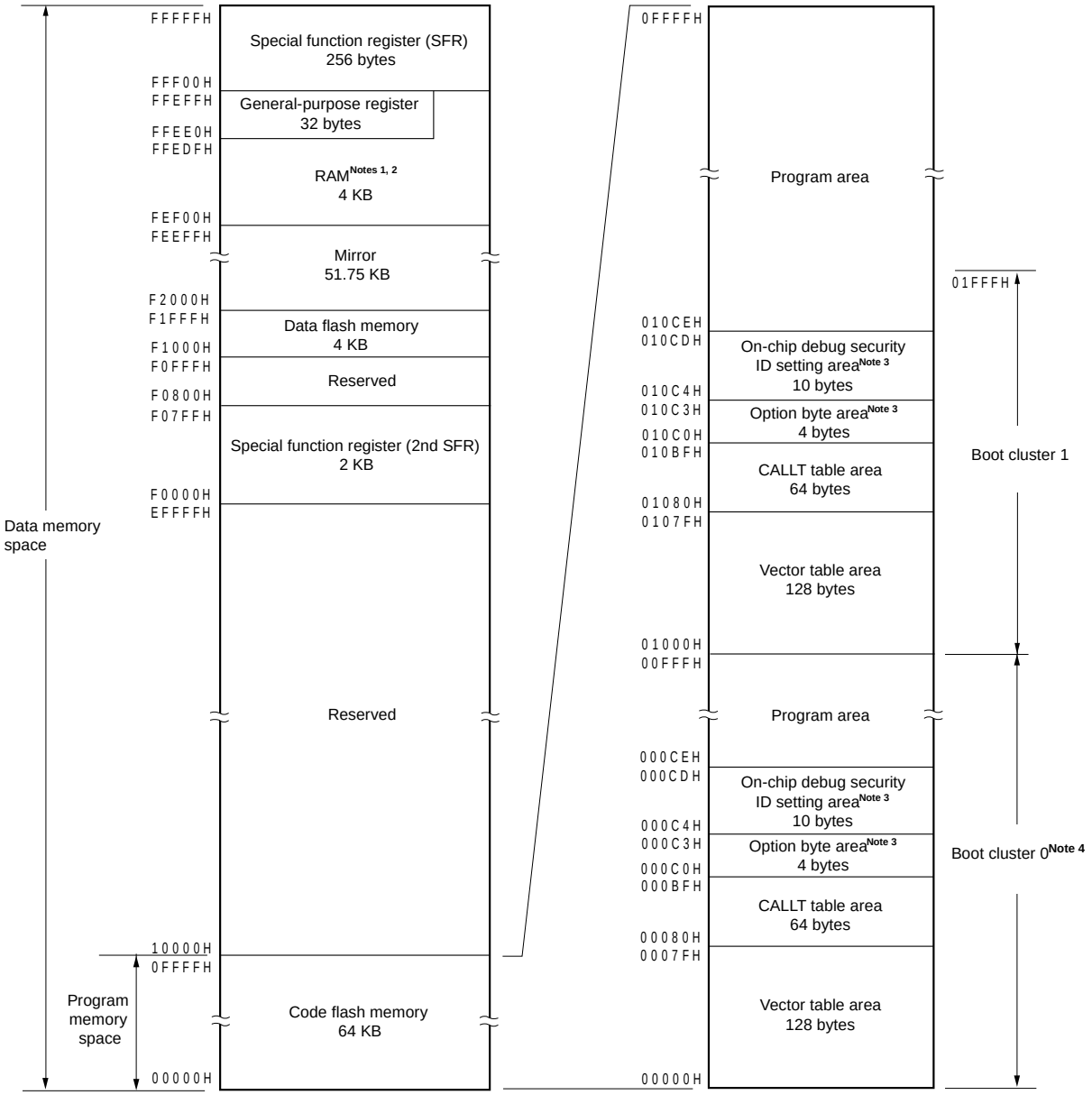

Notes 1. Do not allocate RAM addresses which are used as a stack area, a data buffer, a branch destination of vector interrupt processing, and a DMA transfer destination/transfer source to the area FFE20H to FFEDFH when performing self-programming and rewriting the data flash memory.

2. Instructions can be executed from the RAM area excluding the general-purpose register area.

3. When boot swap is not used: Set the option bytes to 000C0H to 000C3H, and the on-chip debug security IDs to 000C4H to 000CDH.

When boot swap is used: Set the option bytes to 000C0H to 000C3H and 010C0H to 010C3H, and the on-chip debug security IDs to 000C4H to 000CDH and 010C4H to 010CDH.

4. Writing boot cluster 0 can be prohibited depending on the setting of security (see **28.7 Security Settings**).

Caution While RAM parity error resets are enabled (RPERDIS = 0), be sure to initialize RAM areas where data access is to proceed and the RAM area + 10 bytes when instructions are fetched from RAM areas, respectively.

Reset signal generation sets RAM parity error resets to enabled (RPERDIS = 0). For details, see 25.3.3 RAM parity error detection function.

Figure 3-5. Memory Map (R5F10WLF, R5F10WMF)

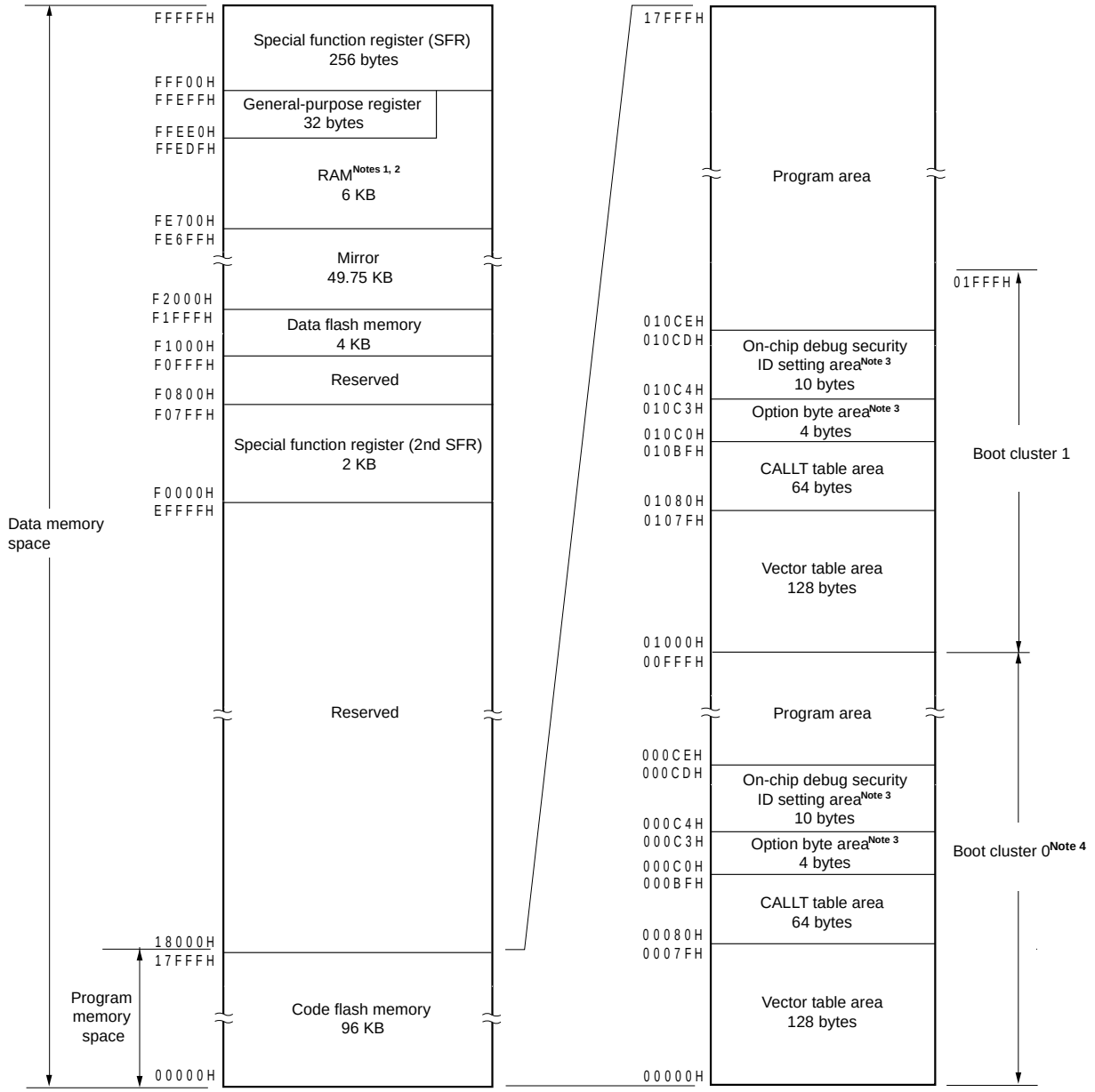

Notes 1. Do not allocate RAM addresses which are used as a stack area, a data buffer, a branch destination of vector interrupt processing, and a DMA transfer destination/transfer source to the area FFE20H to FFEDFH when performing self-programming and rewriting the data flash memory.

2. Instructions can be executed from the RAM area excluding the general-purpose register area.

3. When boot swap is not used: Set the option bytes to 000C0H to 000C3H, and the on-chip debug security IDs to 000C4H to 000CDH.

When boot swap is used: Set the option bytes to 000C0H to 000C3H and 010C0H to 010C3H, and the on-chip debug security IDs to 000C4H to 000CDH and 010C4H to 010CDH.

4. Writing boot cluster 0 can be prohibited depending on the setting of security (see **28.7 Security Settings**).

Caution While RAM parity error resets are enabled (RPERDIS = 0), be sure to initialize RAM areas where data access is to proceed and the RAM area + 10 bytes when instructions are fetched from RAM areas, respectively.

Reset signal generation sets RAM parity error resets to enabled (RPERDIS = 0). For details, see 25.3.3 RAM parity error detection function.

Figure 3-6. Memory Map (R5F10WLG, R5F10WMG)

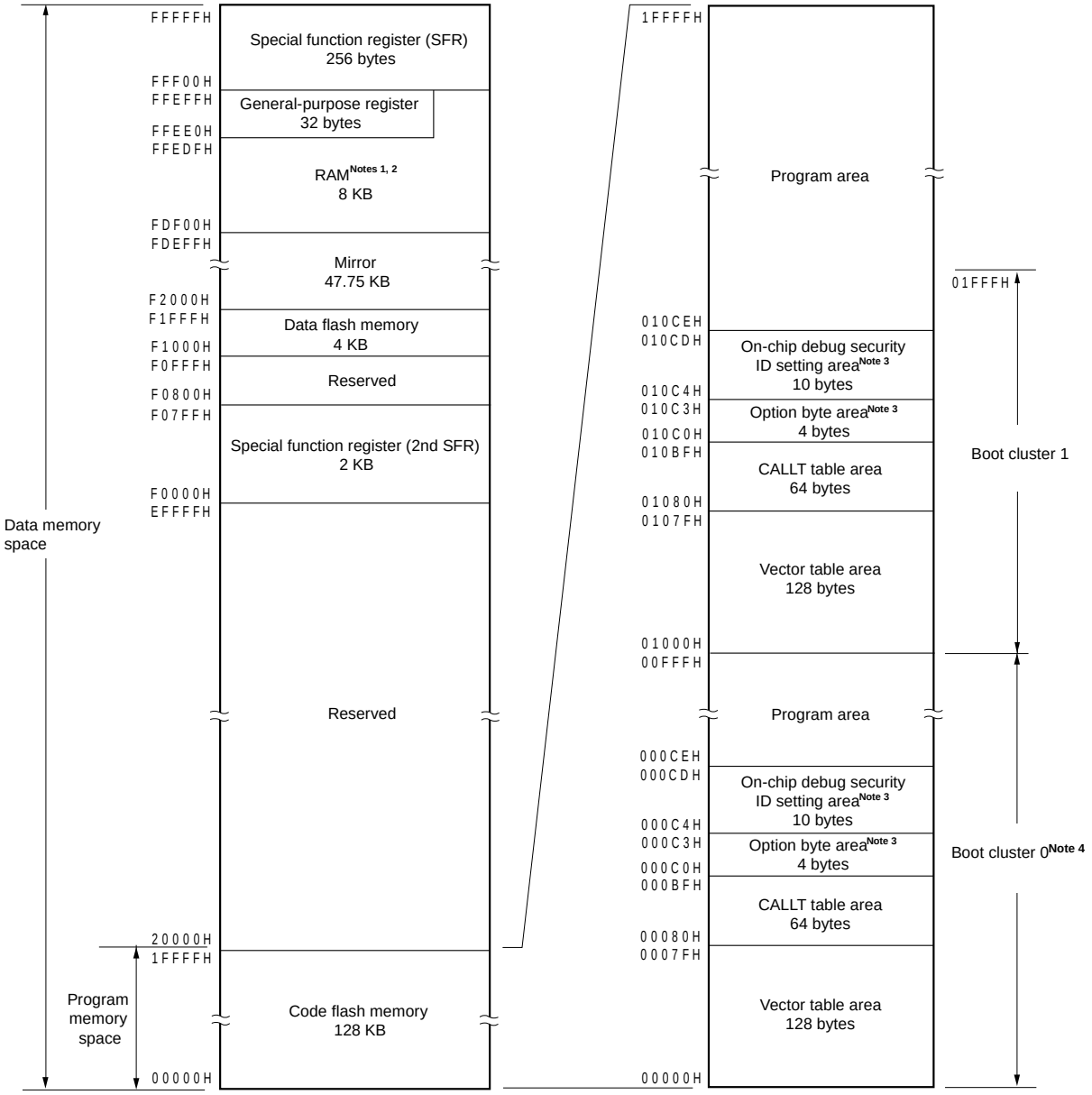

Notes 1. Do not allocate the stack area, data buffers for use by the flash library, arguments of library functions, branch destinations in the processing of vectored interrupts, or destinations or sources for DMA transfer to the area from FFE20H to FFEDFH when performing self-programming or rewriting of the data flash memory.

2. Instructions can be executed from the RAM area excluding the general-purpose register area.

3. When boot swap is not used: Set the option bytes to 000C0H to 000C3H, and the on-chip debug security IDs to 000C4H to 000CDH.

When boot swap is used: Set the option bytes to 000C0H to 000C3H and 010C0H to 010C3H, and the on-chip debug security IDs to 000C4H to 000CDH and 010C4H to 010CDH.

4. Writing boot cluster 0 can be prohibited depending on the setting of security (see **28.7 Security Settings**).

Caution While RAM parity error resets are enabled (RPERDIS = 0), be sure to initialize RAM areas where data access is to proceed and the RAM area + 10 bytes when instructions are fetched from RAM areas, respectively.

Reset signal generation sets RAM parity error resets to enabled (RPERDIS = 0). For details, see 25.3.3 RAM parity error detection function.

Remark The flash memory is divided into blocks (one block = 1 KB). For the address values and block numbers, see **Table 3-1 Correspondence Between Address Values and Block Numbers in Flash Memory**.

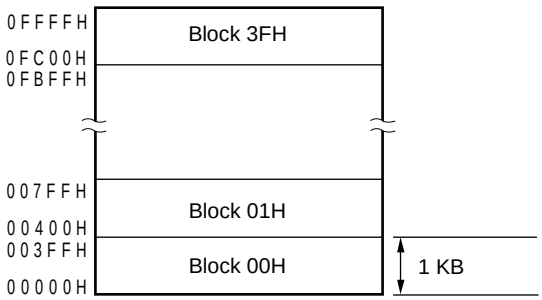

(R5F10WLE, R5F10WME)

Correspondence between the address values and block numbers in the flash memory are shown below.

Table 3-1. Correspondence Between Address Values and Block Numbers in Flash Memory

Address Value	Block Number	Address Value	Block Number	Address Value	Block Number	Address Value	Block Number
00000H to 003FFH	00H	08000H to 083FFH	20H	10000H to 103FFH	40H	18000H to 183FFH	60H
00400H to 007FFH	01H	08400H to 087FFH	21H	10400H to 107FFH	41H	18400H to 187FFH	61H
00800H to 00BFFH	02H	08800H to 08BFFH	22H	10800H to 10BFFH	42H	18800H to 18BFFH	62H
00C00H to 00FFFH	03H	08C00H to 08FFFH	23H	10C00H to 10FFFH	43H	18C00H to 18FFFH	63H
01000H to 013FFH	04H	09000H to 093FFH	24H	11000H to 113FFH	44H	19000H to 193FFH	64H
01400H to 017FFH	05H	09400H to 097FFH	25H	11400H to 117FFH	45H	19400H to 197FFH	65H
01800H to 01BFFH	06H	09800H to 09BFFH	26H	11800H to 11BFFH	46H	19800H to 19BFFH	66H
01C00H to 01FFFH	07H	09C00H to 09FFFH	27H	11C00H to 11FFFH	47H	19C00H to 19FFFH	67H
02000H to 023FFH	08H	0A000H to 0A3FFH	28H	12000H to 123FFH	48H	1A000H to 1A3FFH	68H
02400H to 027FFH	09H	0A400H to 0A7FFH	29H	12400H to 127FFH	49H	1A400H to 1A7FFH	69H
02800H to 02BFFH	0AH	0A800H to 0ABFFH	2AH	12800H to 12BFFH	4AH	1A800H to 1ABFFH	6AH
02C00H to 02FFFH	0BH	0AC00H to 0AFFFH	2BH	12C00H to 12FFFH	4BH	1AC00H to 1AFFFH	6BH
03000H to 033FFH	0CH	0B000H to 0B3FFH	2CH	13000H to 133FFH	4CH	1B000H to 1B3FFH	6CH
03400H to 037FFH	0DH	0B400H to 0B7FFH	2DH	13400H to 137FFH	4DH	1B400H to 1B7FFH	6DH
03800H to 03BFFH	0EH	0B800H to 0BBFFH	2EH	13800H to 13BFFH	4EH	1B800H to 1BBFFH	6EH
03C00H to 03FFFH	0FH	0BC00H to 0BFFFH	2FH	13C00H to 13FFFH	4FH	1BC00H to 1BFFFH	6FH
04000H to 043FFH	10H	0C000H to 0C3FFH	30H	14000H to 143FFH	50H	1C000H to 1C3FFH	70H
04400H to 047FFH	11H	0C400H to 0C7FFH	31H	14400H to 147FFH	51H	1C400H to 1C7FFH	71H
04800H to 04BFFH	12H	0C800H to 0CBFFH	32H	14800H to 14BFFH	52H	1C800H to 1CBFFH	72H
04C00H to 04FFFH	13H	0CC00H to 0CFFFH	33H	14C00H to 14FFFH	53H	1CC00H to 1CFFFH	73H
05000H to 053FFH	14H	0D000H to 0D3FFH	34H	15000H to 153FFH	54H	1D000H to 1D3FFH	74H
05400H to 057FFH	15H	0D400H to 0D7FFH	35H	15400H to 157FFH	55H	1D400H to 1D7FFH	75H
05800H to 05BFFH	16H	0D800H to 0DBFFH	36H	15800H to 15BFFH	56H	1D800H to 1DBFFH	76H
05C00H to 05FFFH	17H	0DC00H to 0DFFFH	37H	15C00H to 15FFFH	57H	1DC00H to 1DFFFH	77H
06000H to 063FFH	18H	0E000H to 0E3FFH	38H	16000H to 163FFH	58H	1E000H to 1E3FFH	78H
06400H to 067FFH	19H	0E400H to 0E7FFH	39H	16400H to 167FFH	59H	1E400H to 1E7FFH	79H
06800H to 06BFFH	1AH	0E800H to 0EBFFH	3AH	16800H to 16BFFH	5AH	1E800H to 1EBFFH	7AH
06C00H to 06FFFH	1BH	0EC00H to 0EFFFH	3BH	16C00H to 16FFFH	5BH	1EC00H to 1EFFFH	7BH
07000H to 073FFH	1CH	0F000H to 0F3FFH	3CH	17000H to 173FFH	5CH	1F000H to 1F3FFH	7CH
07400H to 077FFH	1DH	0F400H to 0F7FFH	3DH	17400H to 177FFH	5DH	1F400H to 1F7FFH	7DH
07800H to 07BFFH	1EH	0F800H to 0FBFFH	3EH	17800H to 17BFFH	5EH	1F800H to 1FBFFH	7EH
07C00H to 07FFFH	1FH	0FC00H to 0FFFFH	3FH	17C00H to 17FFFH	5FH	1FC00H to 1FFFFH	7FH

Remark R5F10WLA, R5F10WMA: Block numbers 00H to 0FH
R5F10WLC, R5F10WMC: Block numbers 00H to 1FH
R5F10WLD, R5F10WMD: Block numbers 00H to 2FH
R5F10WLE, R5F10WME: Block numbers 00H to 3FH
R5F10WLF, R5F10WMF: Block numbers 00H to 5FH
R5F10WLG, R5F10WMG: Block numbers 00H to 7FH

3.1.1 Internal program memory space

The internal program memory space stores the program and table data. The RL78/L13 products incorporate internal ROM (flash memory), as shown below.

Table 3-2. Internal ROM Capacity

Part Number	Internal ROM	
	Structure	Capacity
R5F10WLA, R5F10WMA	Flash memory	16384 × 8 bits (00000H to 03FFFH)
R5F10WLC, R5F10WMC		32768 × 8 bits (00000H to 07FFFH)
R5F10WLD, R5F10WMD		49152 × 8 bits (00000H to 0BFFFH)
R5F10WLE, R5F10WME		65536 × 8 bits (00000H to 0FFFFH)
R5F10WLF, R5F10WMF		98304 × 8 bits (00000H to 17FFFH)
R5F10WLG, R5F10WMG		131072 × 8 bits (00000H to 1FFFFH)

The internal program memory space is divided into the following areas.

(1) Vector table area

The 128-byte area 00000H to 0007FH is reserved as a vector table area. The program start addresses for branch upon reset or generation of each interrupt request are stored in the vector table area. Furthermore, the interrupt jump address is a 64 K address of 00000H to 0FFFFH, because the vector code is assumed to be 2 bytes.

Of the 16-bit address, the lower 8 bits are stored at even addresses and the higher 8 bits are stored at odd addresses.

To use the boot swap function, set a vector table also at 01000H to 0107FH.

Table 3-3. Vector Table (1/2)

Vector Table Address	Interrupt Source	80-pin	64-pin
00000H	RESET, POR, LVD, WDT, TRAP, IAW, RPE	√	√
00004H	INTWDTI	√	√
00006H	INTLVI	√	√
00008H	INTP0	√	√
0000AH	INTP1	√	√
0000CH	INTP2	√	√
0000EH	INTP3	√	√
00010H	INTP4	√	√
00012H	INTP5	√	√
00014H	INTST2	√	√
00016H	INTSR2	√	√
00018H	INTSRE2	√	√
0001AH	INTDMA0	√	√
0001CH	INTDMA1	√	√
0001EH	INTST0/INTCSI00/INTIIC00	√	√
00020H	INTTM00	√	√
00022H	INTSR0	√	√
00024H	INTSRE0	√	√
	INTTM01H	√	√
00026H	INTST1/INTCSI10/INTIIC10	√	√
00028H	INTSR1	√	√
0002AH	INTSRE1	√	√
	INTTM03H	√	√
0002CH	INTIICA0	√	√
0002EH	INTRTIT	√	√
00032H	INTTM01	√	√
00034H	INTTM02	√	√
00036H	INTTM03	√	√
00038H	INTAD	√	√
0003AH	INTRTC	√	√
0003CH	INTIT	√	√
0003EH	INTKR	√	√
00040H	INTST3	√	–
00042H	INTSR3	√	–
00044H	INTTKB20	√	√

Table 3-3. Vector Table (2/2)

Vector Table Address	Interrupt Source	80-pin	64-pin
00046H	INTTM04	√	√
00048H	INTTM05	√	√
0004AH	INTP6	√	√
0004CH	INTP7	√	√
00050H	INTCMP0	√	√
00052H	INTCMP1	√	√
00054H	INTTM06	√	√
00056H	INTTM07	√	√
0005CH	INTSRE3	√	–
0005EH	INTMD	√	√
00062H	INTFL	√	√
00064H	INTDMA2	√	√
00066H	INTDMA3	√	√
0007EH	BRK	√	√

(2) CALLT instruction table area

The 64-byte area 00080H to 000BFH can store the subroutine entry address of a 2-byte call instruction (CALLT). Set the subroutine entry address to a value in a range of 00000H to 0FFFFH (because an address code is of 2 bytes).
To use the boot swap function, set a CALLT instruction table also at 01080H to 010BFH.

(3) Option byte area

A 4-byte area of 000C0H to 000C3H can be used as an option byte area. Set the option byte at 010C0H to 010C3H when the boot swap is used. For details, see **CHAPTER 27 OPTION BYTE**.

(4) On-chip debug security ID setting area

A 10-byte area of 000C4H to 000CDH and 010C4H to 010CDH can be used as an on-chip debug security ID setting area. Set the on-chip debug security ID of 10 bytes at 000C4H to 000CDH when the boot swap is not used and at 000C4H to 000CDH and 010C4H to 010CDH when the boot swap is used. For details, see **CHAPTER 29 ON-CHIP DEBUGGING**.

3.1.2 Mirror area

The RL78/L13 mirrors the code flash area of 00000H to 0FFFFH, to F0000H to FFFFFH. The products with 96 KB or more flash memory mirror the code flash area of 00000H to 0FFFFH or 10000H to 1FFFFH, to F0000H to FFFFFH (the code flash area to be mirrored is set by the processor mode control register (PMC)).

By reading data from F0000H to FFFFFH, an instruction that does not have the ES register as an operand can be used, and thus the contents of the code flash can be read with the shorter code. However, the code flash area is not mirrored to the SFR, extended SFR, RAM area, data flash area, and use prohibited areas.

See **3.1 Memory Space** for the mirror area of each product.

The mirror area can only be read and no instruction can be fetched from this area.

The following show examples.

Example R5F10WLE, R5F10WME (Flash memory: 64 KB, RAM: 4 KB)

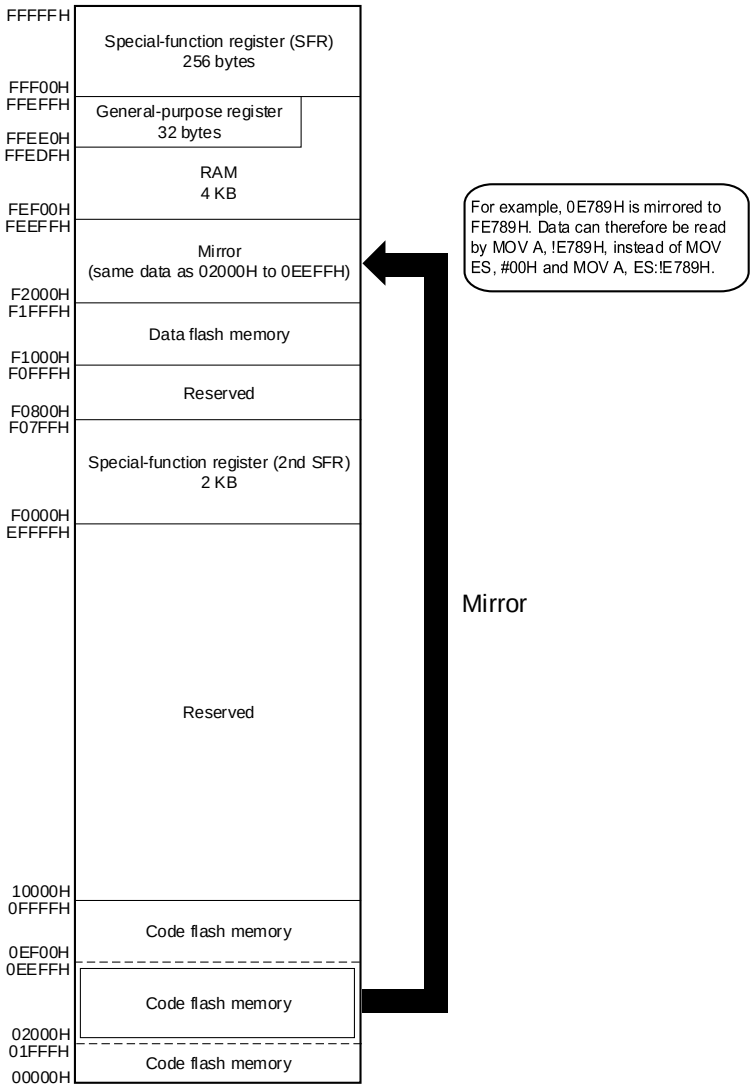

The PMC register is described below.

- **Processor mode control register (PMC)**

  This register sets the flash memory space for mirroring to area from F0000H to FFFFFH.

  The PMC register can be set by a 1-bit or 8-bit memory manipulation instruction.

  Reset signal generation sets this register to 00H.

Figure 3-7. Format of **Configuration of Processor Mode Control Register (PMC)**

Address: FFFFEH After reset: 00H R/W

Symbol	7	6	5	4	3	2	1	<0>
PMC	0	0	0	0	0	0	0	MAA

MAA	Selection of flash memory space for mirroring to area from F0000H to FFFFFH
0	00000H to 0FFFFH is mirrored to F0000H to FFFFFH
1	10000H to 1FFFFH is mirrored to F0000H to FFFFFH[Note]

Note This setting is prohibited in products with 64 KB or less flash memory

Cautions 1. In products with 64 KB or less flash memory, be sure to clear bit 0 (MAA) of this register to 0 (default value).

2. After setting the PMC register, wait for at least one instruction and access the mirror area.

3.1.3 Internal data memory space

The RL78/L13 products incorporate the following RAMs.

Table 3-4. Internal RAM Capacity

Part Number	Internal RAM
R5F10WLA, R5F10WMA	1024 × 8 bits (FFB00H to FFEFFH)
R5F10WLC, R5F10WMC	1536 × 8 bits (FF900H to FFEFFH)
R5F10WLD, R5F10WMD	2048 × 8 bits (FF700H to FFEFFH)
R5F10WLE, R5F10WME	4096 × 8 bits (FEF00H to FFEFFH)
R5F10WLF, R5F10WMF	6144 × 8 bits (FE700H to FFEFFH)
R5F10WLG, R5F10WMG	8192 × 8 bits (FDF00H to FFEFFH)

The internal RAM can be used as a data area and a program area where instructions are written and executed. Four general-purpose register banks consisting of eight 8-bit registers per bank are assigned to the 32-byte area of FFEE0H to FFEFFH of the internal RAM area. However, instructions cannot be executed by using the general-purpose registers.

The internal RAM is used as stack memory.

Cautions 1. The space (FFEE0H to FFEFFH) that the general-purpose registers are allocated cannot be used for fetching instructions or as a stack area.

2. Do not allocate RAM addresses which are used as a stack area, a data buffer, a branch destination of vector interrupt processing, and a DMA transfer destination/transfer source to the area FFE20H to FFEDFH when performing self-programming and rewriting the data flash memory.

3. Use of the RAM areas of the following products is prohibited when performing self-programming and rewriting the data flash memory, because these areas are used for each library.

R5F10WLG, R5F10WMG: FDF00H to FE309H

3.1.4 Special function register (SFR) area

On-chip peripheral hardware special function registers (SFRs) are allocated in the area FFF00H to FFFFFH (see **Table 3-5** in **3.2.4 Special function registers (SFRs)**).

Caution Do not access addresses to which SFRs are not assigned.

3.1.5 Extended special function register (2nd SFR: 2nd Special Function Register) area

On-chip peripheral hardware special function registers (2nd SFRs) are allocated in the area F0000H to F07FFH (see **Table 3-6** in **3.2.5 Extended Special function registers (2nd SFRs: 2nd Special Function Registers)**).

SFRs other than those in the SFR area (FFF00H to FFFFFH) are allocated to this area. An instruction that accesses the extended SFR area, however, is 1 byte longer than an instruction that accesses the SFR area.

Caution Do not access addresses to which extended SFRs are not assigned.

3.1.6 Data memory addressing

Addressing refers to the method of specifying the address of the instruction to be executed next or the address of the register or memory relevant to the execution of instructions.

Several addressing modes are provided for addressing the memory relevant to the execution of instructions for the RL78/L13, based on operability and other considerations. In particular, special addressing methods designed for the functions of the special function registers (SFR) and general-purpose registers are available for use. Figure 3-8 shows correspondence between data memory and addressing.

For details of each addressing, see **3.4 Addressing for Processing Data Addresses**.

Figure 3-8. Correspondence Between Data Memory and Addressing

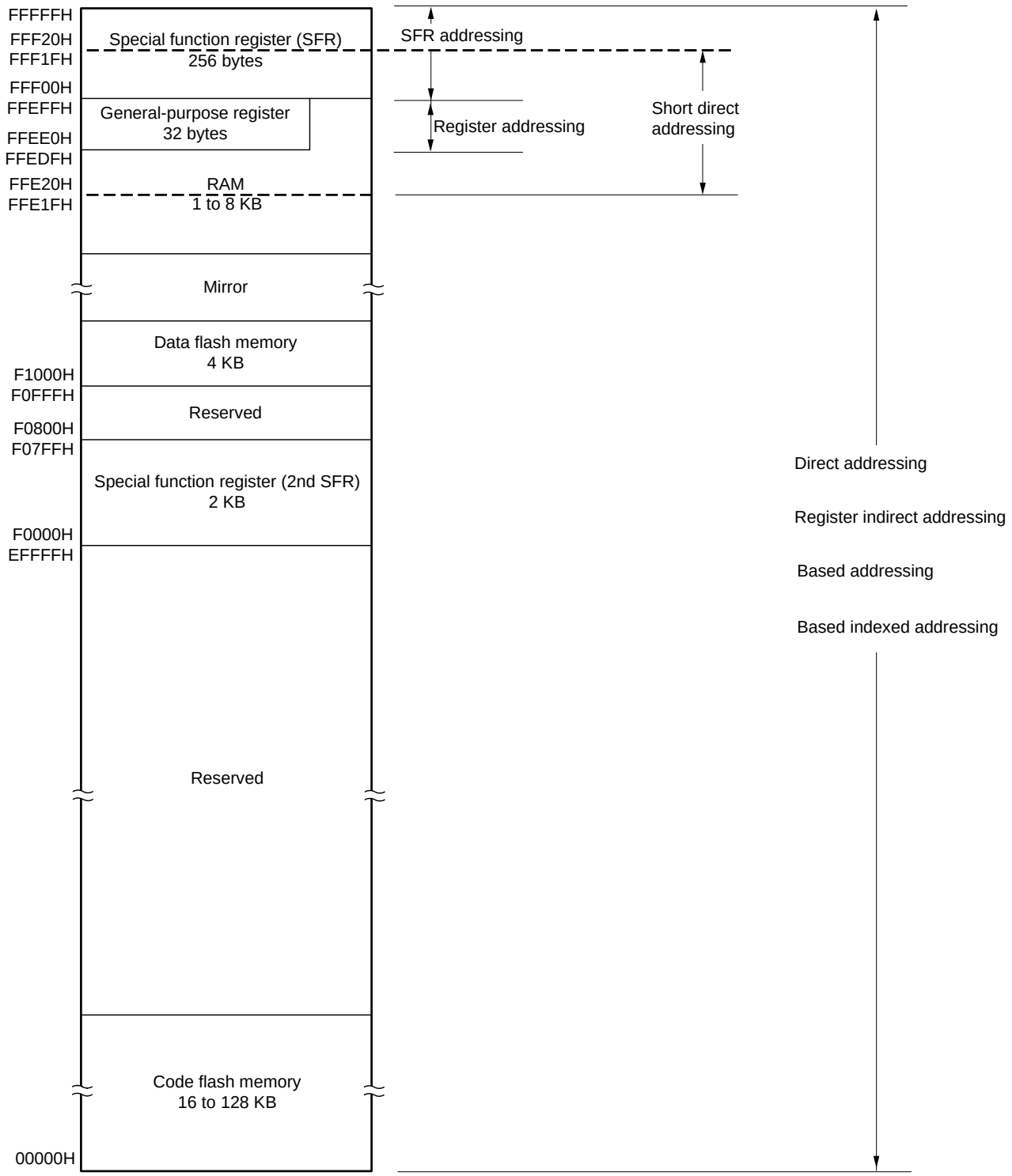

3.2 Processor Registers

The RL78/L13 products incorporate the following processor registers.

3.2.1 Control registers

The control registers control the program sequence, statuses and stack memory. The control registers consist of a program counter (PC), a program status word (PSW) and a stack pointer (SP).

(1) Program counter (PC)

The program counter is a 20-bit register that holds the address information of the next program to be executed.

In normal operation, PC is automatically incremented according to the number of bytes of the instruction to be fetched.

When a branch instruction is executed, immediate data and register contents are set.

Reset signal generation sets the reset vector table values at addresses 00000H and 00001H to the program counter.

Figure 3-9. Format of Program Counter

	19															0
PC																

(2) Program status word (PSW)

The program status word is an 8-bit register consisting of various flags set/reset by instruction execution.

Program status word contents are stored in the stack area upon vectored interrupt request is acknowledged or PUSH PSW instruction execution and are restored upon execution of the RETB, RETI and POP PSW instructions. Reset signal generation sets the PSW register to 06H.

Figure 3-10. Format of Program Status Word

	7							0
PSW	IE	Z	RBS1	AC	RBS0	ISP1	ISP0	CY

(a) Interrupt enable flag (IE)

This flag controls the interrupt request acknowledge operations of the CPU.

When 0, the IE flag is set to the interrupt disabled (DI) state, and all maskable interrupt requests are disabled.

When 1, the IE flag is set to the interrupt enabled (EI) state and maskable interrupt request acknowledgment is controlled with an in-service priority flag (ISP1, ISP0), an interrupt mask flag for various interrupt sources, and a priority specification flag.

The IE flag is reset (0) upon DI instruction execution or interrupt acknowledgment and is set (1) upon EI instruction execution.

(b) Zero flag (Z)

When the operation result is zero or equal, this flag is set (1). It is reset (0) in all other cases.

(c) Register bank select flags (RBS0, RBS1)

These are 2-bit flags to select one of the four register banks.

In these flags, the 2-bit information that indicates the register bank selected by SEL RBn instruction execution is stored.

(d) Auxiliary carry flag (AC)

If the operation result has a carry from bit 3 or a borrow at bit 3, this flag is set (1). It is reset (0) in all other cases.

(e) In-service priority flags (ISP1, ISP0)

This flag manages the priority of acknowledgeable maskable vectored interrupts. Vectored interrupt requests specified lower than the value of ISP0 and ISP1 flags by the priority specification flag registers (PRn0L, PRn0H, PRn1L, PRn1H, PRn2L, PRn2H) (see **19.3.3**) can not be acknowledged. Actual vectored interrupt request acknowledgment is controlled by the interrupt enable flag (IE).

Remark n = 0, 1

(f) Carry flag (CY)

This flag stores overflow and underflow upon add/subtract instruction execution. It stores the shift-out value upon rotate instruction execution and functions as a bit accumulator during bit operation instruction execution.

(3) Stack pointer (SP)

This is a 16-bit register to hold the start address of the memory stack area. Only the internal RAM area can be set as the stack area.

Figure 3-11. Format of Stack Pointer

	15															0
SP	SP15	SP14	SP13	SP12	SP11	SP10	SP9	SP8	SP7	SP6	SP5	SP4	SP3	SP2	SP1	0

In stack addressing through a stack pointer, the SP is decremented ahead of write (save) to the stack memory and is incremented after read (restore) from the stack memory.

Cautions 1. Since reset signal generation makes the SP contents undefined, be sure to initialize the SP before using the stack.

2. It is prohibited to use the general-purpose register (FFEE0H to FFEFFH) space for fetching instructions or a stack area.

3. Do not allocate RAM addresses which are used as a stack area, a data buffer, a branch destination of vector interrupt processing, and a DMA transfer destination/transfer source to the area FFE20H to FFEDFH when performing self-programming and rewriting the data flash memory.

4. Use of the RAM areas of the following products is prohibited when performing self-programming and rewriting the data flash memory, because these areas are used for each library.

R5F10WLG, R5F10WMG: FDF00H to FE309H

3.2.2 General-purpose registers

General-purpose registers are mapped at particular addresses (FFEE0H to FFEFFH) of the data memory. The general-purpose registers consists of 4 banks, each bank consisting of eight 8-bit registers (X, A, C, B, E, D, L, and H).

Each register can be used as an 8-bit register, and two 8-bit registers can also be used in a pair as a 16-bit register (AX, BC, DE, and HL).

Register banks to be used for instruction execution are set by the CPU control instruction (SEL RBn). Because of the 4-register bank configuration, an efficient program can be created by switching between a register for normal processing and a register for interrupt processing for each bank.

Caution It is prohibited to use the general-purpose register (FFEE0H to FFEFFH) space for fetching instructions or as a stack area.

Figure 3-12. Configuration of General-Purpose Registers

(a) Function name

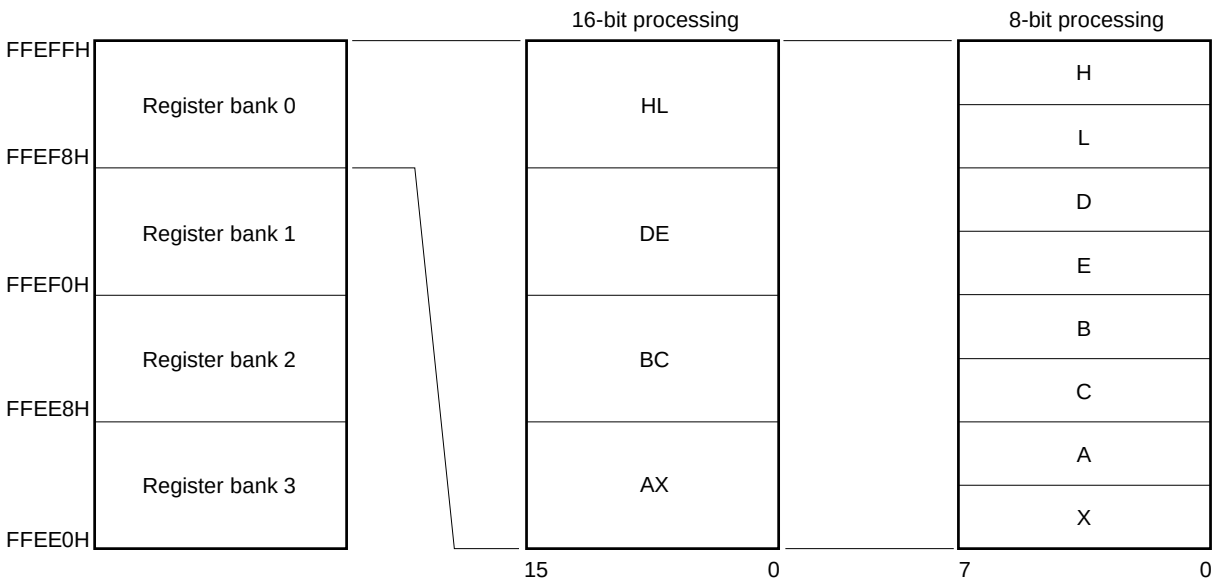

3.2.3 ES and CS registers

The ES register and CS register are used to specify the higher address for data access and when a branch instruction is executed (register direct addressing), respectively.

The default value of the ES register after reset is 0FH, and that of the CS register is 00H.

Figure 3-13. Configuration of ES and CS Registers

	7	6	5	4	3	2	1	0
ES	0	0	0	0	ES3	ES2	ES1	ES0

	7	6	5	4	3	2	1	0
CS	0	0	0	0	CS3	CS2	CS1	CS0

Though the data area which can be accessed with 16-bit addresses is the 64 KB from F0000H to FFFFFH, using the ES register as well extends this to the 1 MB from 00000H to FFFFFH.

Figure 3-14. Extension of Data Area Which Can Be Accessed

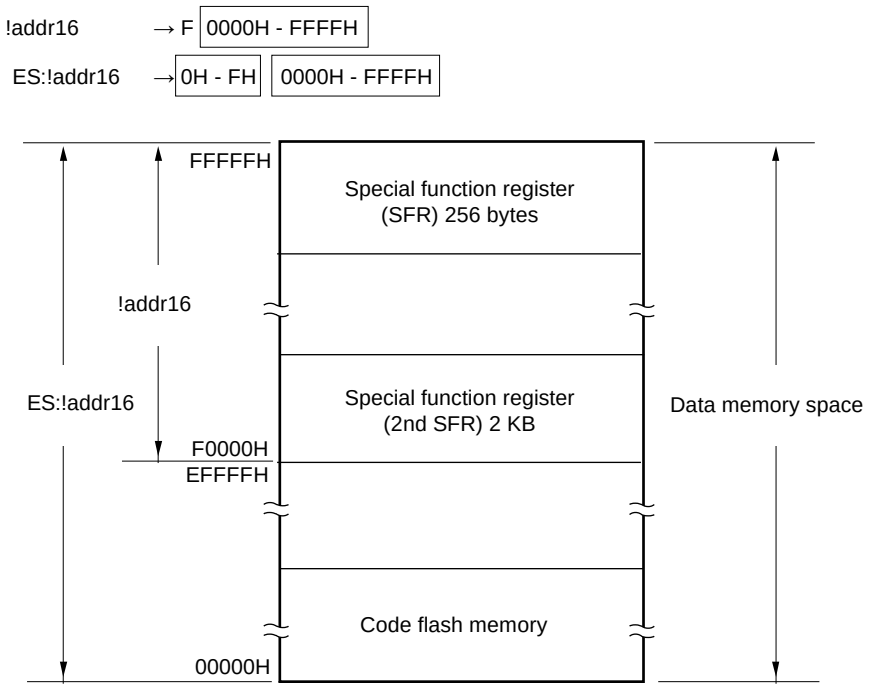

3.2.4 Special function registers (SFRs)

Unlike a general-purpose register, each SFR has a special function.

SFRs are allocated to the FFF00H to FFFFFH area.

SFRs can be manipulated like general-purpose registers, using operation, transfer, and bit manipulation instructions. The manipulable bit units, 1, 8, and 16, depend on the SFR type.

Each manipulation bit unit can be specified as follows.

- 1-bit manipulation
  Describe as follows for the 1-bit manipulation instruction operand (sfr.bit).
  When the bit name is defined: <Bit name>
  When the bit name is not defined: <Register name>.<Bit number> or <Address>.<Bit number>
- 8-bit manipulation
  Describe the symbol reserved by the assembler for the 8-bit manipulation instruction operand (sfr). This manipulation can also be specified with an address.
- 16-bit manipulation
  Describe the symbol reserved by the assembler for the 16-bit manipulation instruction operand (sfrp). When specifying an address, describe an even address.

Table 3-5 gives a list of the SFRs. The meanings of items in the table are as follows.

- Symbol
  Symbol indicating the address of a special function register. It is a reserved word in the assembler, and is defined as an sfr variable using the #pragma sfr directive in the compiler. When using the assembler, debugger, and simulator, symbols can be written as an instruction operand.
- R/W
  Indicates whether the corresponding SFR can be read or written.
  R/W: Read/write enable
  R: Read only
  W: Write only
- Manipulable bit units
  "√" indicates the manipulable bit unit (1, 8, or 16). "–" indicates a bit unit for which manipulation is not possible.
- After reset
  Indicates each register status upon reset signal generation.

Caution Do not access addresses to which extended SFRs are not assigned.

Remark For extended SFRs (2nd SFRs), see **3.2.5 Extended special function registers (2nd SFRs: 2nd Special Function Registers)**.

Table 3-5. SFR List (1/5)

Address	Special Function Register (SFR) Name	Symbol		R/W	Manipulable Bit Range			After Reset
					1-bit	8-bit	16-bit	
FFF00H	Port register 0	P0		R/W	√	√	–	00H
FFF01H	Port register 1	P1		R/W	√	√	–	00H
FFF02H	Port register 2	P2		R/W	√	√	–	00H
FFF03H	Port register 3	P3		R/W	√	√	–	00H
FFF04H	Port register 4	P4		R/W	√	√	–	00H
FFF05H	Port register 5	P5		R/W	√	√	–	00H
FFF06H	Port register 6	P6		R/W	√	√	–	00H
FFF07H	Port register 7	P7		R/W	√	√	–	00H
FFF0CH	Port register 12	P12		R/W	√	√	–	Undefined
FFF0DH	Port register 13	P13		R/W	√	√	–	Undefined
FFF10H	Serial data register 00	TXD0/ SIO00	SDR00	R/W	–	√	√	0000H
FFF11H		–			–	–		
FFF12H	Serial data register 01	RXD0	SDR01	R/W	–	√	√	0000H
FFF13H		–			–	–		
FFF14H	Serial data register 12	TXD3	SDR12	R/W	–	√	√	0000H
FFF15H		–			–	–		
FFF16H	Serial data register 13	RXD3	SDR13	R/W	–	√	√	0000H
FFF17H		–			–	–		
FFF18H	Timer data register 00	TDR00		R/W	–	–	√	0000H
FFF19H								
FFF1AH	Timer data register 01	TDR01L	TDR01	R/W	–	√	√	00H
FFF1BH		TDR01H			–	√		00H
FFF1EH	10-bit A/D conversion result register	ADCR		R	–	–	√	0000H
FFF1FH	8-bit A/D conversion result register	ADCRH		R	–	√	–	00H
FFF20H	Port mode register 0	PM0		R/W	√	√	–	FFH
FFF21H	Port mode register 1	PM1		R/W	√	√	–	FFH
FFF22H	Port mode register 2	PM2		R/W	√	√	–	FFH
FFF23H	Port mode register 3	PM3		R/W	√	√	–	FFH
FFF24H	Port mode register 4	PM4		R/W	√	√	–	FFH
FFF25H	Port mode register 5	PM5		R/W	√	√	–	FFH
FFF26H	Port mode register 6	PM6		R/W	√	√	–	FFH
FFF27H	Port mode register 7	PM7		R/W	√	√	–	FFH
FFF2CH	Port mode register 12	PM12		R/W	√	√	–	FFH
FFF2DH	Port mode register 13	PM13		R/W	√	√	–	FFH
FFF30H	A/D converter mode register 0	ADM0		R/W	√	√	–	00H
FFF31H	Analog input channel specification register	ADS		R/W	√	√	–	00H
FFF32H	A/D converter mode register 1	ADM1		R/W	√	√	–	00H

Table 3-5. SFR List (2/5)

Address	Special Function Register (SFR) Name	Symbol		R/W	Manipulable Bit Range			After Reset
					1-bit	8-bit	16-bit	
FFF34H	Key return control register	KRCTL		R/W	√	√	–	00H
FFF35H	Key return flag register	KRF		R/W	√	√	–	00H
FFF37H	Key return mode register	KRM0		R/W	√	√	–	00H
FFF38H	External interrupt rising edge enable register 0	EGP0		R/W	√	√	–	00H
FFF39H	External interrupt falling edge enable register 0	EGN0		R/W	√	√	–	00H
FFF40H	LCD mode register 0	LCDM0		R/W	–	√	–	00H
FFF41H	LCD mode register 1	LCDM1		R/W	√	√	–	00H
FFF42H	LCD clock control register	LCDC0		R/W	–	√	–	00H
FFF43H	LCD boost level control register	VLCD		R/W	–	√	–	04H
FFF44H	Serial data register 02	TXD1/ SIO10	SDR02	R/W	–	√	√	0000H
FFF45H		–			–	–		
FFF46H	Serial data register 03	RXD1	SDR03	R/W	–	√	√	0000H
FFF47H		–			–	–		
FFF48H	Serial data register 10	TXD2	SDR10	R/W	–	√	√	0000H
FFF49H		–			–	–		
FFF4AH	Serial data register 11	RXD2	SDR11	R/W	–	√	√	0000H
FFF4BH		–			–	–		
FFF50H	IICA shift register 0	IICA0		R/W	–	√	–	00H
FFF51H	IICA status register 0	IICS0		R	√	√	–	00H
FFF52H	IICA flag register 0	IICF0		R/W	√	√	–	00H
FFF64H	Timer data register 02	TDR02		R/W	–	–	√	0000H
FFF65H								
FFF66H	Timer data register 03	TDR03L	TDR03	R/W	–	√	√	00H
FFF67H		TDR03H			–	√		00H
FFF68H	Timer data register 04	TDR04		R/W	–	–	√	0000H
FFF69H								
FFF6AH	Timer data register 05	TDR05		R/W	–	–	√	0000H
FFF6BH								
FFF6CH	Timer data register 06	TDR06		R/W	–	–	√	0000H
FFF6DH								
FFF6EH	Timer data register 07	TDR07		R/W	–	–	√	0000H
FFF6FH								

Table 3-5. SFR List (3/5)

Address	Special Function Register (SFR) Name	Symbol	R/W	Manipulable Bit Range			After Reset
				1-bit	8-bit	16-bit	
FFF90H FFF91H	12-bit interval timer control register	ITMC	R/W	–	–	√	0FFFH
FFF92H	Second count register	SEC	R/W	–	√	–	Undefined
FFF93H	Minute count register	MIN	R/W	–	√	–	Undefined
FFF94H	Hour count register	HOUR	R/W	–	√	–	Undefined
FFF95H	Week count register	WEEK	R/W	–	√	–	Undefined
FFF96H	Day count register	DAY	R/W	–	√	–	Undefined
FFF97H	Month count register	MONTH	R/W	–	√	–	Undefined
FFF98H	Year count register	YEAR	R/W	–	√	–	Undefined
FFF9AH	Alarm minute register	ALARMWM	R/W	–	√	–	Undefined
FFF9BH	Alarm hour register	ALARMWH	R/W	–	√	–	Undefined
FFF9CH	Alarm week register	ALARMWW	R/W	–	√	–	Undefined
FFF9DH	Real-time clock control register 0	RTCC0	R/W	√	√	–	00H[Note 1]
FFF9EH	Real-time clock control register 1	RTCC1	R/W	√	√	–	00H[Note 1]
FFFA0H	Clock operation mode control register	CMC	R/W	–	√	–	00H[Note 1]
FFFA1H	Clock operation status control register	CSC	R/W	√	√	–	C0H[Note 1]
FFFA2H	Oscillation stabilization time counter status register	OSTC	R	√	√	–	00H
FFFA3H	Oscillation stabilization time select register	OSTS	R/W	–	√	–	07H
FFFA4H	System clock control register	CKC	R/W	√	√	–	00H
FFFA5H	Clock output select register 0	CKS0	R/W	√	√	–	00H
FFFA6H	Clock output select register 1	CKS1	R/W	√	√	–	00H
FFFA8H	Reset control flag register	RESF	R	–	√	–	Undefined[Note 2]
FFFA9H	Voltage detection register	LVIM	R/W	√	√	–	00H[Note 2]
FFFAAH	Voltage detection level register	LVIS	R/W	√	√	–	00H/01H/81H[Note 2]

Notes 1. This register is reset only by a power-on reset.

2. The reset values of the registers vary depending on the reset source as shown below.

Register \ Reset Source		$\overline{\text{RESET}}$ Input	Reset by POR	Reset by Execution of Illegal Instruction	Reset by WDT	Reset by RAM Parity Error	Reset by Illegal-memory Access	Reset by LVD
RESF	TRAP bit	Cleared (0)		Set (1)	Held			Held
	WDTRF bit			Held	Set (1)	Held		
	RPERF bit			Held		Set (1)	Held	
	IAWRF bit			Held			Set (1)	
	LVIRF bit			Held				Set (1)
LVIM	LVISEN bit	Cleared (0)						Held
	LVIOMSK bit	Held						
	LVIF bit							
LVIS		Cleared (00H/01H/81H)						

Table 3-5. SFR List (4/5)

Address	Special Function Register (SFR) Name	Symbol		R/W	Manipulable Bit Range			After Reset
					1-bit	8-bit	16-bit	
FFFABH	Watchdog timer enable register	WDTE		R/W	–	√	–	1AH/9AH[Note]
FFFACH	CRC input register	CRCIN		R/W	–	√	–	00H
FFFB0H	DMA SFR address register 0	DSA0		R/W	–	√	–	00H
FFFB1H	DMA SFR address register 1	DSA1		R/W	–	√	–	00H
FFFB2H	DMA RAM address register 0L	DRA0L	DRA0	R/W	–	√	√	00H
FFFB3H	DMA RAM address register 0H	DRA0H		R/W	–	√		00H
FFFB4H	DMA RAM address register 1L	DRA1L	DRA1	R/W	–	√	√	00H
FFFB5H	DMA RAM address register 1H	DRA1H		R/W	–	√		00H
FFFB6H	DMA byte count register 0L	DBC0L	DBC0	R/W	–	√	√	00H
FFFB7H	DMA byte count register 0H	DBC0H		R/W	–	√		00H
FFFB8H	DMA byte count register 1L	DBC1L	DBC1	R/W	–	√	√	00H
FFFB9H	DMA byte count register 1H	DBC1H		R/W	–	√		00H
FFFBAH	DMA mode control register 0	DMC0		R/W	√	√	–	00H
FFFBBH	DMA mode control register 1	DMC1		R/W	√	√	–	00H
FFFBCH	DMA operation control register 0	DRC0		R/W	√	√	–	00H
FFFBDH	DMA operation control register 1	DRC1		R/W	√	√	–	00H
FFFD0H	Interrupt request flag register 2L	IF2L	IF2	R/W	√	√	√	00H
FFFD1H	Interrupt request flag register 2H	IF2H		R/W	√	√		00H
FFFD2H	Interrupt request flag register 3L	IF3L	IF3	R/W	√	√	√	00H
FFFD4H	Interrupt mask flag register 2L	MK2L	MK2	R/W	√	√	√	FFH
FFFD5H	Interrupt mask flag register 2H	MK2H		R/W	√	√		FFH
FFFD6H	Interrupt mask flag register 3L	MK3L	MK3	R/W	√	√	√	FFH
FFFD8H	Priority specification flag register 02L	PR02L	PR02	R/W	√	√	√	FFH
FFFD9H	Priority specification flag register 02H	PR02H		R/W	√	√		FFH
FFFDAH	Priority specification flag register 03L	PR03L	PR03	R/W	√	√	√	FFH
FFFDCH	Priority specification flag register 12L	PR12L	PR12	R/W	√	√	√	FFH
FFFDDH	Priority specification flag register 12H	PR12H		R/W	√	√		FFH
FFFDEH	Priority specification flag register 13L	PR13L	PR13	R/W	√	√	√	FFH
FFFE0H	Interrupt request flag register 0L	IF0L	IF0	R/W	√	√	√	00H
FFFE1H	Interrupt request flag register 0H	IF0H		R/W	√	√		00H
FFFE2H	Interrupt request flag register 1L	IF1L	IF1	R/W	√	√	√	00H
FFFE3H	Interrupt request flag register 1H	IF1H		R/W	√	√		00H
FFFE4H	Interrupt mask flag register 0L	MK0L	MK0	R/W	√	√	√	FFH
FFFE5H	Interrupt mask flag register 0H	MK0H		R/W	√	√		FFH
FFFE6H	Interrupt mask flag register 1L	MK1L	MK1	R/W	√	√	√	FFH
FFFE7H	Interrupt mask flag register 1H	MK1H		R/W	√	√		FFH

Note The reset value of the WDTE register is determined by the setting of the option byte.

Table 3-5. SFR List (5/5)

Address	Special Function Register (SFR) Name	Symbol		R/W	Manipulable Bit Range			After Reset
					1-bit	8-bit	16-bit	
FFFE8H	Priority specification flag register 00L	PR00L	PR00	R/W	√	√	√	FFH
FFFE9H	Priority specification flag register 00H	PR00H		R/W	√	√		FFH
FFFEAH	Priority specification flag register 01L	PR01L	PR01	R/W	√	√	√	FFH
FFFEBH	Priority specification flag register 01H	PR01H		R/W	√	√		FFH
FFFECH	Priority specification flag register 10L	PR10L	PR10	R/W	√	√	√	FFH
FFFEDH	Priority specification flag register 10H	PR10H		R/W	√	√		FFH
FFFEEH	Priority specification flag register 11L	PR11L	PR11	R/W	√	√	√	FFH
FFFEFH	Priority specification flag register 11H	PR11H		R/W	√	√		FFH
FFFF0H FFFF1H	Multiplication/division data register A (L)	MDAL		R/W	–	–	√	0000H
FFFF2H FFFF3H	Multiplication/division data register A (H)	MDAH		R/W	–	–	√	0000H
FFFF4H FFFF5H	Multiplication/division data register B (H)	MDBH		R/W	–	–	√	0000H
FFFF6H FFFF7H	Multiplication/division data register B (L)	MDBL		R/W	–	–	√	0000H
FFFFEH	Processor mode control register	PMC		R/W	√	√	–	00H

Remark For extended SFRs (2nd SFRs), see **Table 3-6 Extended SFR (2nd SFR) List**.

3.2.5 Extended special function registers (2nd SFRs: 2nd Special Function Registers)

Unlike a general-purpose register, each extended SFR (2nd SFR) has a special function.

Extended SFRs are allocated to the F0000H to F07FFH area. SFRs other than those in the SFR area (FFF00H to FFFFFH) are allocated to this area. An instruction that accesses the extended SFR area, however, is 1 byte longer than an instruction that accesses the SFR area.

Extended SFRs can be manipulated like general-purpose registers, using operation, transfer, and bit manipulation instructions. The manipulable bit units, 1, 8, and 16, depend on the SFR type.

Each manipulation bit unit can be specified as follows.

- 1-bit manipulation
  Describe as follows for the 1-bit manipulation instruction operand (sfr.bit)
  When the bit name is defined: <Bit name>
  When the bit name is not defined: <Register name>.<Bit number> or <Address>.<Bit number>
- 8-bit manipulation
  Describe the symbol reserved by the assembler for the 8-bit manipulation instruction operand (!addr16). This manipulation can also be specified with an address.
- 16-bit manipulation
  Describe the symbol reserved by the assembler for the 16-bit manipulation instruction operand (!addr16). When specifying an address, describe an even address.

Table 3-6 gives a list of the extended SFRs. The meanings of items in the table are as follows.

- Symbol
  Symbol indicating the address of an extended SFR. It is a reserved word in the assembler, and is defined as an sfr variable using the #pragma sfr directive in the compiler. When using the assembler, debugger, and simulator, symbols can be written as an instruction operand.
- R/W
  Indicates whether the corresponding extended SFR can be read or written.
  R/W: Read/write enable
  R: Read only
  W: Write only
- Manipulable bit units
  "√" indicates the manipulable bit unit (1, 8, or 16). "–" indicates a bit unit for which manipulation is not possible.
- After reset
  Indicates each register status upon reset signal generation.

Caution Do not access addresses to which extended SFRs are not assigned.

Remark For SFRs in the SFR area, see **3.2.4 Special function registers (SFRs)**.

Table 3-6. Extended SFR (2nd SFR) List (1/9)

Address	Special Function Register (SFR) Name	Symbol	R/W	Manipulable Bit Range			After Reset
				1-bit	8-bit	16-bit	
F0010H	A/D converter mode register 2	ADM2	R/W	√	√	–	00H
F0011H	Conversion result comparison upper limit setting register	ADUL	R/W	–	√	–	FFH
F0012H	Conversion result comparison lower limit setting register	ADLL	R/W	–	√	–	00H
F0013H	A/D test register	ADTES	R/W	–	√	–	00H
F0030H	Pull-up resistor option register 0	PU0	R/W	√	√	–	00H
F0031H	Pull-up resistor option register 1	PU1	R/W	√	√	–	00H
F0032H	Pull-up resistor option register 2	PU2	R/W	√	√	–	00H
F0033H	Pull-up resistor option register 3	PU3	R/W	√	√	–	00H
F0034H	Pull-up resistor option register 4	PU4	R/W	√	√	–	01H
F0035H	Pull-up resistor option register 5	PU5	R/W	√	√	–	00H
F0037H	Pull-up resistor option register 7	PU7	R/W	√	√	–	00H
F003CH	Pull-up resistor option register 12	PU12	R/W	√	√	–	00H
F003DH	Pull-up resistor option register 13	PU13	R/W	√	√	–	00H
F0040H	Port input mode register 0	PIM0	R/W	√	√	–	00H
F0041H	Port input mode register 1	PIM1	R/W	√	√	–	00H
F0043H	Port input mode register 3	PIM3	R/W	√	√	–	00H
F0044H	Port input mode register 4	PIM4	R/W	√	√	–	00H
F0045H	Port input mode register 5	PIM5	R/W	√	√	–	00H
F0050H	Port output mode register 0	POM0	R/W	√	√	–	00H
F0051H	Port output mode register 1	POM1	R/W	√	√	–	00H
F0053H	Port output mode register 3	POM3	R/W	√	√	–	00H
F0054H	Port output mode register 4	POM4	R/W	√	√	–	00H
F0055H	Port output mode register 5	POM5	R/W	√	√	–	00H
F005DH	Port output mode register 13	POM13	R/W	√	√	–	00H
F0061H	Port mode control register 1	PMC1	R/W	√	√	–	FFH
F0062H	Port mode control register 2	PMC2	R/W	√	√	–	FFH
F0064H	Port mode control register 4	PMC4	R/W	√	√	–	00H
F0070H	Noise filter enable register 0	NFEN0	R/W	√	√	–	00H
F0071H	Noise filter enable register 1	NFEN1	R/W	√	√	–	00H
F0073H	Input switch control register	ISC	R/W	√	√	–	00H
F0074H	Timer input select register 0	TIS0	R/W	–	√	–	00H
F0076H	A/D port configuration register	ADPC	R/W	–	√	–	00H
F0077H	Peripheral I/O redirection register	PIOR	R/W	–	√	–	00H
F0078H	Invalid memory access detection control register	IAWCTL	R/W	–	√	–	00H
F0079H	Timer output select register	TOS	R/W	√	√	–	00H
F007AH	Peripheral enable register 1	PER1	R/W	√	√	–	00H
F007BH	Port mode select resister	PMS	R/W	√	√	–	00H

Table 3-6. Extended SFR (2nd SFR) List (2/9)

Address	Special Function Register (SFR) Name	Symbol		R/W	Manipulable Bit Range			After Reset
					1-bit	8-bit	16-bit	
F007CH	Timer KB2 output pin switch register	PWCTKB		R/W	–	√	–	00H
F0090H	Data flash control register	DFLCTL		R/W	√	√	–	00H
F00A0H	High-speed on-chip oscillator trimming register	HIOTRM		R/W	–	√	–	Undefined[Note 1]
F00A8H	High-speed on-chip oscillator frequency select register	HOCODIV		R/W	–	√	–	Undefined[Note 2]
F00E0H	Multiplication/division data register C (L)	MDCL		R/W	–	–	√	0000H
F00E2H	Multiplication/division data register C (H)	MDCH		R/W	–	–	√	0000H
F00E8H	Multiplication/division control register	MDUC		R/W	√	√	–	00H
F00F0H	Peripheral enable register 0	PER0		R/W	√	√	–	00H
F00F3H	Subsystem clock supply mode control register	OSMC		R/W	–	√	–	00H
F00F5H	RAM parity error control register	RPECTL		R/W	√	√	–	00H
F00F9H	Power-on-reset status register	PORSR		R/W	–	√	–	00H[Note 3]
F00FEH	BCD adjust result register	BCDADJ		R	–	√	–	Undefined
F0100H	Serial status register 00	SSR00L	SSR00	R	–	√	√	0000H
F0101H		–			–	–		
F0102H	Serial status register 01	SSR01L	SSR01	R	–	√	√	0000H
F0103H		–			–	–		
F0104H	Serial status register 02	SSR02L	SSR02	R	–	√	√	0000H
F0105H		–			–	–		
F0106H	Serial status register 03	SSR03L	SSR03	R	–	√	√	0000H
F0107H		–			–	–		
F0108H	Serial flag clear trigger register 00	SIR00L	SIR00	R/W	–	√	√	0000H
F0109H		–			–	–		
F010AH	Serial flag clear trigger register 01	SIR01L	SIR01	R/W	–	√	√	0000H
F010BH		–			–	–		
F010CH	Serial flag clear trigger register 02	SIR02L	SIR02	R/W	–	√	√	0000H
F010DH		–			–	–		
F010EH	Serial flag clear trigger register 03	SIR03L	SIR03	R/W	–	√	√	0000H
F010FH		–			–	–		
F0110H	Serial mode register 00	SMR00		R/W	–	–	√	0020H
F0111H								
F0112H	Serial mode register 01	SMR01		R/W	–	–	√	0020H
F0113H								
F0114H	Serial mode register 02	SMR02		R/W	–	–	√	0020H
F0115H								
F0116H	Serial mode register 03	SMR03		R/W	–	–	√	0020H
F0117H								

Notes 1. The value after a reset is adjusted at the time of shipment.

2. The value after a reset is a value set in FRQSEL2 to FRQSEL0 of the option byte (000C2H).

3. This register is reset only by a power-on reset.

Table 3-6. Extended SFR (2nd SFR) List (3/9)

Address	Special Function Register (SFR) Name	Symbol		R/W	Manipulable Bit Range			After Reset
					1-bit	8-bit	16-bit	
F0118H	Serial communication operation setting register 00	SCR00		R/W	–	–	√	0087H
F0119H								
F011AH	Serial communication operation setting register 01	SCR01		R/W	–	–	√	0087H
F011BH								
F011CH	Serial communication operation setting register 02	SCR02		R/W	–	–	√	0087H
F011DH								
F011EH	Serial communication operation setting register 03	SCR03		R/W	–	–	√	0087H
F011FH								
F0120H	Serial channel enable status register 0	SE0L	SE0	R	√	√	√	0000H
F0121H		–			–	–		
F0122H	Serial channel start register 0	SS0L	SS0	R/W	√	√	√	0000H
F0123H		–			–	–		
F0124H	Serial channel stop register 0	ST0L	ST0	R/W	√	√	√	0000H
F0125H		–			–	–		
F0126H	Serial clock select register 0	SPS0L	SPS0	R/W	–	√	√	0000H
F0127H		–			–	–		
F0128H	Serial output register 0	SO0		R/W	–	–	√	0F0FH
F0129H								
F012AH	Serial output enable register 0	SOE0L	SOE0	R/W	√	√	√	0000H
F012BH		–			–	–		
F0134H	Serial output level register 0	SOL0L	SOL0	R/W	–	√	√	0000H
F0135H		–			–	–		
F0138H	Serial standby control register 0	SSC0L	SSC0	R/W	–	√	√	0000H
F0139H		–			–	–		
F0140H	Serial status register 10	SSR10L	SSR10	R	–	√	√	0000H
F0141H		–			–	–		
F0142H	Serial status register 11	SSR11L	SSR11	R	–	√	√	0000H
F0143H		–			–	–		
F0144H	Serial status register 12	SSR12L	SSR12	R	–	√	√	0000H
F0145H		–			–	–		
F0146H	Serial status register 13	SSR13L	SSR13	R	–	√	√	0000H
F0147H		–			–	–		
F0148H	Serial flag clear trigger register 10	SIR10L	SIR10	R/W	–	√	√	0000H
F0149H		–			–	–		
F014AH	Serial flag clear trigger register 11	SIR11L	SIR11	R/W	–	√	√	0000H
F014BH		–			–	–		
F014CH	Serial flag clear trigger register 12	SIR12L	SIR12	R/W	–	√	√	0000H
F014DH		–			–	–		
F014EH	Serial flag clear trigger register 13	SIR13L	SIR13	R/W	–	√	√	0000H
F014FH		–			–	–		
F0150H	Serial mode register 10	SMR10		R/W	–	–	√	0020H
F0151H								

Table 3-6. Extended SFR (2nd SFR) List (4/9)

Address	Special Function Register (SFR) Name	Symbol		R/W	Manipulable Bit Range			After Reset
					1-bit	8-bit	16-bit	
F0152H	Serial mode register 11	SMR11		R/W	–	–	√	0020H
F0153H								
F0154H	Serial mode register 12	SMR12		R/W	–	–	√	0020H
F0155H								
F0156H	Serial mode register 13	SMR13		R/W	–	–	√	0020H
F0157H								
F0158H	Serial communication operation setting register 10	SCR10		R/W	–	–	√	0087H
F0159H								
F015AH	Serial communication operation setting register 11	SCR11		R/W	–	–	√	0087H
F015BH								
F015CH	Serial communication operation setting register 12	SCR12		R/W	–	–	√	0087H
F015DH								
F015EH	Serial communication operation setting register 13	SCR13		R/W	–	–	√	0087H
F015FH								
F0160H	Serial channel enable status register 1	SE1L	SE1	R	√	√	√	0000H
F0161H		–			–	–		
F0162H	Serial channel start register 1	SS1L	SS1	R/W	√	√	√	0000H
F0163H		–			–	–		
F0164H	Serial channel stop register 1	ST1L	ST1	R/W	√	√	√	0000H
F0165H		–			–	–		
F0166H	Serial clock select register 1	SPS1L	SPS1	R/W	–	√	√	0000H
F0167H		–			–	–		
F0168H	Serial output register 1	SO1		R/W	–	–	√	0F0FH
F0169H								
F016AH	Serial output enable register 1	SOE1L	SOE1	R/W	√	√	√	0000H
F016BH		–			–	–		
F0174H	Serial output level register 1	SOL1L	SOL1	R/W	–	√	√	0000H
F0175H		–			–	–		
F0178H	Serial standby control register 1	SSC1L	SSC1	R/W	–	√	√	0000H
F0179H		–			–	–		
F0180H	Timer counter register 00	TCR00		R	–	–	√	FFFFH
F0181H								
F0182H	Timer counter register 01	TCR01		R	–	–	√	FFFFH
F0183H								
F0184H	Timer counter register 02	TCR02		R	–	–	√	FFFFH
F0185H								
F0186H	Timer counter register 03	TCR03		R	–	–	√	FFFFH
F0187H								
F0188H	Timer counter register 04	TCR04		R	–	–	√	FFFFH
F0189H								

Table 3-6. Extended SFR (2nd SFR) List (5/9)

Address	Special Function Register (SFR) Name	Symbol		R/W	Manipulable Bit Range			After Reset
					1-bit	8-bit	16-bit	
F018AH	Timer counter register 05	TCR05		R	–	–	√	FFFFH
F018BH								
F018CH	Timer counter register 06	TCR06		R	–	–	√	FFFFH
F018DH								
F018EH	Timer counter register 07	TCR07		R	–	–	√	FFFFH
F018FH								
F0190H	Timer mode register 00	TMR00		R/W	–	–	√	0000H
F0191H								
F0192H	Timer mode register 01	TMR01		R/W	–	–	√	0000H
F0193H								
F0194H	Timer mode register 02	TMR02		R/W	–	–	√	0000H
F0195H								
F0196H	Timer mode register 03	TMR03		R/W	–	–	√	0000H
F0197H								
F0198H	Timer mode register 04	TMR04		R/W	–	–	√	0000H
F0199H								
F019AH	Timer mode register 05	TMR05		R/W	–	–	√	0000H
F019BH								
F019CH	Timer mode register 06	TMR06		R/W	–	–	√	0000H
F019DH								
F019EH	Timer mode register 07	TMR07		R/W	–	–	√	0000H
F019FH								
F01A0H	Timer status register 00	TSR00L	TSR00	R	–	√	√	0000H
F01A1H		–			–	–		
F01A2H	Timer status register 01	TSR01L	TSR01	R	–	√	√	0000H
F01A3H		–			–	–		
F01A4H	Timer status register 02	TSR02L	TSR02	R	–	√	√	0000H
F01A5H		–			–	–		
F01A6H	Timer status register 03	TSR03L	TSR03	R	–	√	√	0000H
F01A7H		–			–	–		
F01A8H	Timer status register 04	TSR04L	TSR04	R	–	√	√	0000H
F01A9H		–			–	–		
F01AAH	Timer status register 05	TSR05L	TSR05	R	–	√	√	0000H
F01ABH		–			–	–		
F01ACH	Timer status register 06	TSR06L	TSR06	R	–	√	√	0000H
F01ADH		–			–	–		
F01AEH	Timer status register 07	TSR07L	TSR07	R	–	√	√	0000H
F01AFH		–			–	–		
F01B0H	Timer channel enable status register 0	TE0L	TE0	R	√	√	√	0000H
F01B1H		–			–	–		
F01B2H	Timer channel start register 0	TS0L	TS0	R/W	√	√	√	0000H
F01B3H		–			–	–		

Table 3-6. Extended SFR (2nd SFR) List (6/9)

Address	Special Function Register (SFR) Name	Symbol		R/W	Manipulable Bit Range			After Reset
					1-bit	8-bit	16-bit	
F01B4H	Timer channel stop register 0	TT0L	TT0	R/W	√	√	√	0000H
F01B5H		–			–	–		
F01B6H	Timer clock select register 0	TPS0		R/W	–	–	√	0000H
F01B7H								
F01B8H	Timer output register 0	TO0L	TO0	R/W	–	√	√	0000H
F01B9H		–			–	–		
F01BAH	Timer output enable register 0	TOE0L	TOE0	R/W	√	√	√	0000H
F01BBH		–			–	–		
F01BCH	Timer output level register 0	TOL0L	TOL0	R/W	–	√	√	0000H
F01BDH		–			–	–		
F01BEH	Timer output mode register 0	TOM0L	TOM0	R/W	–	√	√	0000H
F01BFH		–			–	–		
F0200H	DMA SFR address register 2	DSA2		R/W	–	√	–	00H
F0201H	DMA SFR address register 3	DSA3		R/W	–	√	–	00H
F0202H	DMA RAM address register 2L	DRA2L	DRA2	R/W	–	√	√	00H
F0203H	DMA RAM address register 2H	DRA2H		R/W	–	√		00H
F0204H	DMA RAM address register 3L	DRA3L	DRA3	R/W	–	√	√	00H
F0205H	DMA RAM address register 3H	DRA3H		R/W	–	√		00H
F0206H	DMA byte count register 2L	DBC2L	DBC2	R/W	–	√	√	00H
F0207H	DMA byte count register 2H	DBC2H		R/W	–	√		00H
F0208H	DMA byte count register 3L	DBC3L	DBC3	R/W	–	√	√	00H
F0209H	DMA byte count register 3H	DBC3H		R/W	–	√		00H
F020AH	DMA mode control register 2	DMC2		R/W	√	√	–	00H
F020BH	DMA mode control register 3	DMC3		R/W	√	√	–	00H
F020CH	DMA operation control register 2	DRC2		R/W	√	√	–	00H
F020DH	DMA operation control register 3	DRC3		R/W	√	√	–	00H
F0230H	IICA control register 00	IICCTL00		R/W	√	√	–	00H
F0231H	IICA control register 01	IICCTL01		R/W	√	√	–	00H
F0232H	IICA low-level width setting register 0	IICWL0		R/W	–	√	–	FFH
F0233H	IICA high-level width setting register 0	IICWH0		R/W	–	√	–	FFH
F0234H	Slave address register 0	SVA0		R/W	–	√	–	00H
F0240H	TMKB2 counter restart trigger select register 00	ELSELR00		R/W	–	√	–	00H
F0241H	TMKB2 counter restart trigger select register 01	ELSELR01		R/W	–	√	–	00H
F0242H	TMKB2 counter restart trigger select register 02	ELSELR02		R/W	–	√	–	00H
F0243H	TMKB2 counter restart trigger select register 03	ELSELR03		R/W	–	√	–	00H
F0244H	TMKB2 counter restart trigger select register 04	ELSELR04		R/W	–	√	–	00H

Table 3-6. Extended SFR (2nd SFR) List (7/9)

Address	Special Function Register (SFR) Name	Symbol	R/W	Manipulable Bit Range			After Reset
				1-bit	8-bit	16-bit	
F0245H	TMKB2 counter restart trigger select register 05	ELSELR05	R/W	–	√	–	00H
F0246H	TMKB2 counter restart trigger select register 06	ELSELR06	R/W	–	√	–	00H
F0247H	TMKB2 counter restart trigger select register 07	ELSELR07	R/W	–	√	–	00H
F0248H	TMKB2 counter restart trigger select register 08	ELSELR08	R/W	–	√	–	00H
F0249H	TMKB2 counter restart trigger select register 09	ELSELR09	R/W	–	√	–	00H
F02F0H	Flash memory CRC control register	CRC0CTL	R/W	√	√	–	00H
F02F2H	Flash memory CRC operation result register	PGCRCL	R/W	–	–	√	0000H
F02FAH	CRC data register	CRCD	R/W	–	–	√	0000H
F0300H	LCD port function register 0	PFSEG0	R/W	√	√	–	F0H
F0301H	LCD port function register 1	PFSEG1	R/W	√	√	–	FFH
F0302H	LCD port function register 2	PFSEG2	R/W	√	√	–	FFH
F0303H	LCD port function register 3	PFSEG3	R/W	√	√	–	FFH
F0304H	LCD port function register 4	PFSEG4	R/W	√	√	–	FFH
F0305H	LCD port function register 5	PFSEG5	R/W	√	√	–	FFH
F0306H	LCD port function register 6	PFSEG6	R/W	√	√	–	0FH
F0308H	LCD input switch control register	ISCLCD	R/W	√	√	–	00H
F0310H F0311H	Watch error correction register	SUBCUD	R/W	–	–	√	0020H[Note]
F0340H	Comparator mode setting register	COMPMDR	R/W	√	√	–	00H
F0341H	Comparator filter control register	COMPFIR	R/W	√	√	–	00H
F0342H	Comparator output control register	COMPOCR	R/W	√	√	–	00H
F0400H	LCD display data memory 0	SEG0	R/W	–	√	–	00H
F0401H	LCD display data memory 1	SEG1	R/W	–	√	–	00H
F0402H	LCD display data memory 2	SEG2	R/W	–	√	–	00H
F0403H	LCD display data memory 3	SEG3	R/W	–	√	–	00H
F0404H	LCD display data memory 4	SEG4	R/W	–	√	–	00H
F0405H	LCD display data memory 5	SEG5	R/W	–	√	–	00H
F0406H	LCD display data memory 6	SEG6	R/W	–	√	–	00H
F0407H	LCD display data memory 7	SEG7	R/W	–	√	–	00H
F0408H	LCD display data memory 8	SEG8	R/W	–	√	–	00H
F0409H	LCD display data memory 9	SEG9	R/W	–	√	–	00H
F040AH	LCD display data memory 10	SEG10	R/W	–	√	–	00H
F040BH	LCD display data memory 11	SEG11	R/W	–	√	–	00H
F040CH	LCD display data memory 12	SEG12	R/W	–	√	–	00H
F040DH	LCD display data memory 13	SEG13	R/W	–	√	–	00H

Note This register is reset only by a power-on reset.

Table 3-6. Extended SFR (2nd SFR) List (8/9)

Address	Special Function Register (SFR) Name	Symbol	R/W	Manipulable Bit Range			After Reset
				1-bit	8-bit	16-bit	
F040EH	LCD display data memory 14	SEG14	R/W	–	√	–	00H
F040FH	LCD display data memory 15	SEG15	R/W	–	√	–	00H
F0410H	LCD display data memory 16	SEG16	R/W	–	√	–	00H
F0411H	LCD display data memory 17	SEG17	R/W	–	√	–	00H
F0412H	LCD display data memory 18	SEG18	R/W	–	√	–	00H
F0413H	LCD display data memory 19	SEG19	R/W	–	√	–	00H
F0414H	LCD display data memory 20	SEG20	R/W	–	√	–	00H
F0415H	LCD display data memory 21	SEG21	R/W	–	√	–	00H
F0416H	LCD display data memory 22	SEG22	R/W	–	√	–	00H
F0417H	LCD display data memory 23	SEG23	R/W	–	√	–	00H
F0418H	LCD display data memory 24	SEG24	R/W	–	√	–	00H
F0419H	LCD display data memory 25	SEG25	R/W	–	√	–	00H
F041AH	Use prohibited						
F041BH	LCD display data memory 26	SEG26	R/W	–	√	–	00H
F041CH	LCD display data memory 27	SEG27	R/W	–	√	–	00H
F041DH	LCD display data memory 28	SEG28	R/W	–	√	–	00H
F041EH	LCD display data memory 29	SEG29	R/W	–	√	–	00H
F041FH	LCD display data memory 30	SEG30	R/W	–	√	–	00H
F0420H	LCD display data memory 31	SEG31	R/W	–	√	–	00H
F0421H	LCD display data memory 32	SEG32	R/W	–	√	–	00H
F0422H	LCD display data memory 33	SEG33	R/W	–	√	–	00H
F0423H	LCD display data memory 34	SEG34	R/W	–	√	–	00H
F0424H	LCD display data memory 35	SEG35	R/W	–	√	–	00H
F0425H	LCD display data memory 36	SEG36	R/W	–	√	–	00H
F0426H	LCD display data memory 37	SEG37	R/W	–	√	–	00H
F0427H	LCD display data memory 38	SEG38	R/W	–	√	–	00H
F0428H	LCD display data memory 39	SEG39	R/W	–	√	–	00H
F0429H	LCD display data memory 40	SEG40	R/W	–	√	–	00H
F042AH	LCD display data memory 41	SEG41	R/W	–	√	–	00H
F042BH	LCD display data memory 42	SEG42	R/W	–	√	–	00H
F042CH	LCD display data memory 43	SEG43	R/W	–	√	–	00H
F042DH	LCD display data memory 44	SEG44	R/W	–	√	–	00H
F042EH	LCD display data memory 45	SEG45	R/W	–	√	–	00H
F042FH	LCD display data memory 46	SEG46	R/W	–	√	–	00H
F0430H	LCD display data memory 47	SEG47	R/W	–	√	–	00H
F0431H	LCD display data memory 48	SEG48	R/W	–	√	–	00H
F0432H	LCD display data memory 49	SEG49	R/W	–	√	–	00H
F0433H	LCD display data memory 50	SEG50	R/W	–	√	–	00H
F0500H F0501H	16-bit timer KB2 compare register 00	TKBCR00	R/W	–	–	√	0000H
F0502H F0503H	16-bit timer KB2 compare register 01	TKBCR01	R/W	–	–	√	0000H
F0504H F0505H	16-bit timer KB2 compare register 02	TKBCR02	R/W	–	–	√	0000H

Table 3-6. Extended SFR (2nd SFR) List (9/9)

Address	Special Function Register (SFR) Name	Symbol	R/W	Manipulable Bit Range			After Reset
				1-bit	8-bit	16-bit	
F0506H F0507H	16-bit timer KB2 compare register 03	TKBCR03	R/W	–	–	√	0000H
F050AH F050BH	16-bit timer KB2 smooth start initial duty register 00	TKBSIR00	R/W	–	–	√	0000H
F050CH F050DH	16-bit timer KB2 smooth start initial duty register 01	TKBSIR01	R/W	–	–	√	0000H
F050EH	16-bit timer KB2 dithering count register 00	TKBDNR00	R/W	–	√	–	00H
F050FH	16-bit timer KB2 smooth start step width register 00	TKBSSR00	R/W	–	√	–	00H
F0510H	16-bit timer KB2 dithering count register 01	TKBDNR01	R/W	–	√	–	00H
F0511H	16-bit timer KB2 smooth start step width register 01	TKBSSR01	R/W	–	√	–	00H
F0512H	16-bit timer KB2 trigger register 0	TKBTRG0	R/W	√	√	–	00H
F0513H	16-bit timer KB2 flag register 0	TKBFLG0	R	√	√	–	00H
F0514H F0515H	16-bit timer KB2 compare 1L & dithering count register 00	TKBCRLD00	R/W	–	–	√	0000H
F0516H F0517H	16-bit timer KB2 compare 1L & dithering count register 01	TKBCRLD01	R/W	–	–	√	0000H
F0520H	16-bit timer counter KB20	TKBCNT0	R	–	–	√	FFFFH
F0522H F0523H	16-bit timer KB2 operation control register 00	TKBCTL00	R/W	–	–	√	0000H
F0524H F0525H	16-bit timer KB2 maximum frequency limit setting register 0	TKBMFR0	R/W	–	–	√	0000H
F0526H	16-bit timer KB2 output control register 00	TKBIOC00	R/W	√	√	–	00H
F0527H	16-bit timer KB2 flag clear trigger register 0	TKBCLR0	R/W	√	√	–	00H
F0528H	16-bit timer KB2 output control register 01	TKBIOC01	R/W	√	√	–	00H
F0529H	16-bit timer KB2 operation control register 01	TKBCTL01	R/W	√	√	–	00H
F052AH	16-bit timer KB2 count clock division ratio select register 0	TKBPSCS0	R/W	–	√	–	00H
F0530H F0531H	Forced output stop function control register 00	TKBPACTL00	R/W	–	–	√	0000H
F0532H F0533H	Forced output stop function control register 01	TKBPACTL01	R/W	–	–	√	0000H
F0534H	Forced output stop function 1 start trigger register 0	TKBPAHFS0	R/W	√	√	–	00H
F0535H	Forced output stop function stop trigger register 0	TKBPAHFT0	R/W	√	√	–	00H
F0536H	Forced output stop function flag register 0	TKBPAFLG0	R	√	√	–	00H
F0537H	Forced output stop function control register 02	TKBPACTL02	R/W	√	√	–	00H

Remark For SFRs in the SFR area, see **Table 3-5 SFR List**.

3.3 Instruction Address Addressing

3.3.1 Relative addressing

[Function]

Relative addressing stores in the program counter (PC) the result of adding a displacement value included in the instruction word (signed complement data: –128 to +127 or –32768 to +32767) to the program counter (PC)'s value (the start address of the next instruction), and specifies the program address to be used as the branch destination. Relative addressing is applied only to branch instructions.

Figure 3-15. Outline of Relative Addressing

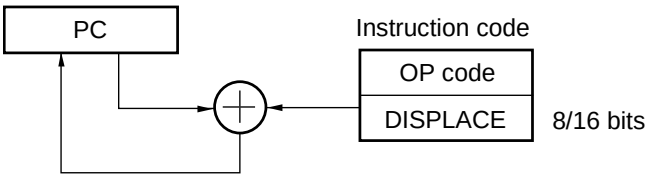

3.3.2 Immediate addressing

[Function]

Immediate addressing stores immediate data of the instruction word in the program counter, and specifies the program address to be used as the branch destination.

For immediate addressing, CALL !!addr20 or BR !!addr20 is used to specify 20-bit addresses and CALL !addr16 or BR !addr16 is used to specify 16-bit addresses. 0000 is set to the higher 4 bits when specifying 16-bit addresses.

Figure 3-16. Example of CALL !!addr20/BR !!addr20

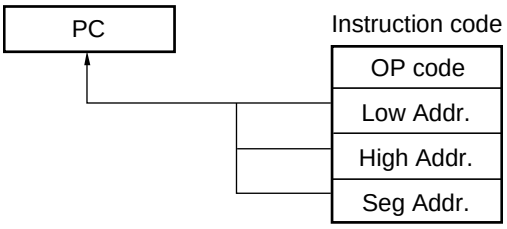

Figure 3-17. Example of CALL !addr16/BR !addr16

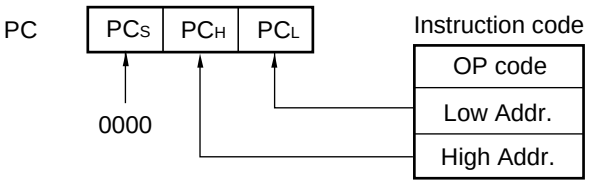

3.3.3 Table indirect addressing

[Function]

Table indirect addressing specifies a table address in the CALLT table area (0080H to 00BFH) with the 5-bit immediate data in the instruction word, stores the contents at that table address and the next address in the program counter (PC) as 16-bit data, and specifies the program address. Table indirect addressing is applied only for CALLT instructions.

In the RL78 microcontrollers, branching is enabled only to the 64 KB space from 00000H to 0FFFFH.

Figure 3-18. Outline of Table Indirect Addressing

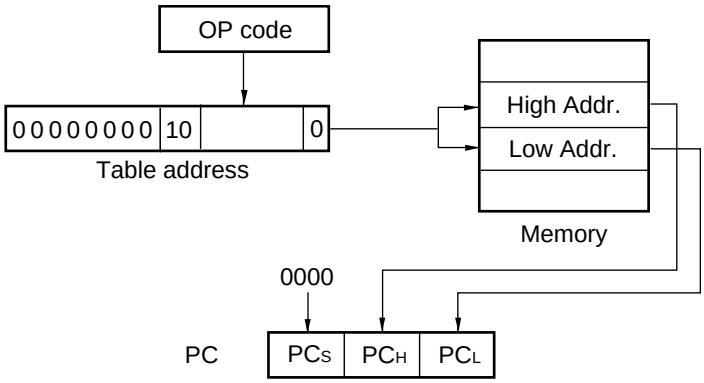

3.3.4 Register indirect addressing

[Function]

Register direct addressing stores in the program counter (PC) the contents of a general-purpose register pair (AX/BC/DE/HL) and CS register of the current register bank specified with the instruction word as 20-bit data, and specifies the program address. Register indirect addressing can be applied only to the CALL AX, BC, DE, HL, and BR AX instructions.

Figure 3-19. Outline of Register Indirect Addressing

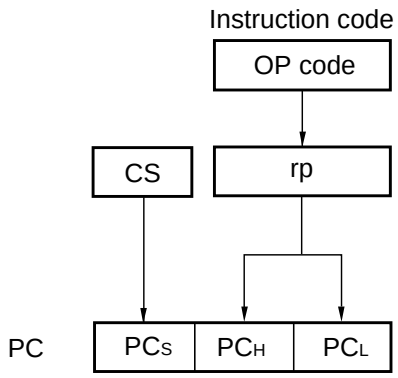

3.4 Addressing for Processing Data Addresses

3.4.1 Implied addressing

[Function]

Instructions for accessing registers (such as accumulators) that have special functions are directly specified with the instruction word, without using any register specification field in the instruction word.

[Operand format]

Implied addressing can be applied only to MULU X.

Figure 3-20. Outline of Implied Addressing

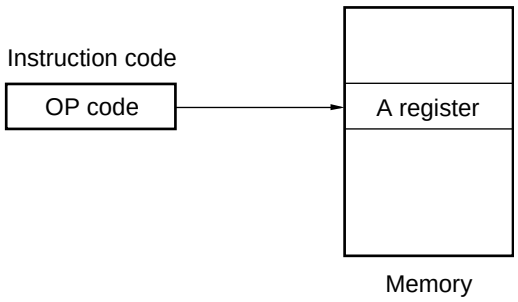

3.4.2 Register addressing

[Function]

Register addressing accesses a general-purpose register as an operand. The instruction word of 3-bit long is used to select an 8-bit register and the instruction word of 2-bit long is used to select a 16-bit register.

[Operand format]

Identifier	Description
r	X, A, C, B, E, D, L, H
rp	AX, BC, DE, HL

Figure 3-21. Outline of Register Addressing

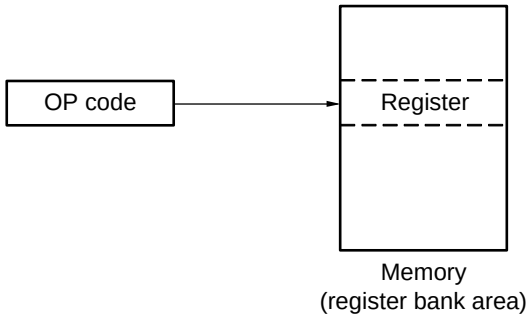

3.4.3 Direct addressing

[Function]

Direct addressing uses immediate data in the instruction word as an operand address to directly specify the target address.

[Operand format]

Identifier	Description
!addr16	Label or 16-bit immediate data (only the space from F0000H to FFFFFH is specifiable)
ES:!addr16	Label or 16-bit immediate data (higher 4-bit addresses are specified by the ES register)

Figure 3-22. Example of !addr16

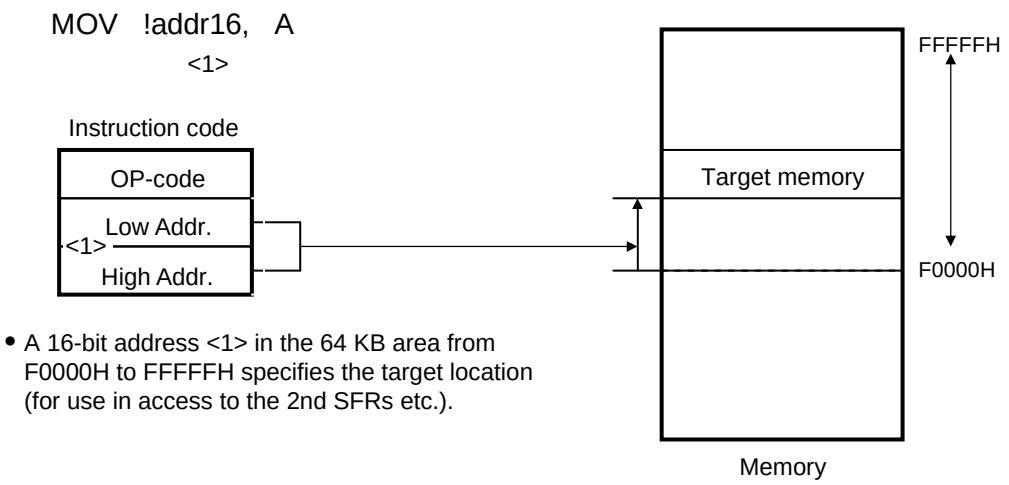

- A 16-bit address <1> in the 64 KB area from F0000H to FFFFFH specifies the target location (for use in access to the 2nd SFRs etc.).

Figure 3-23. Example of ES:!addr16

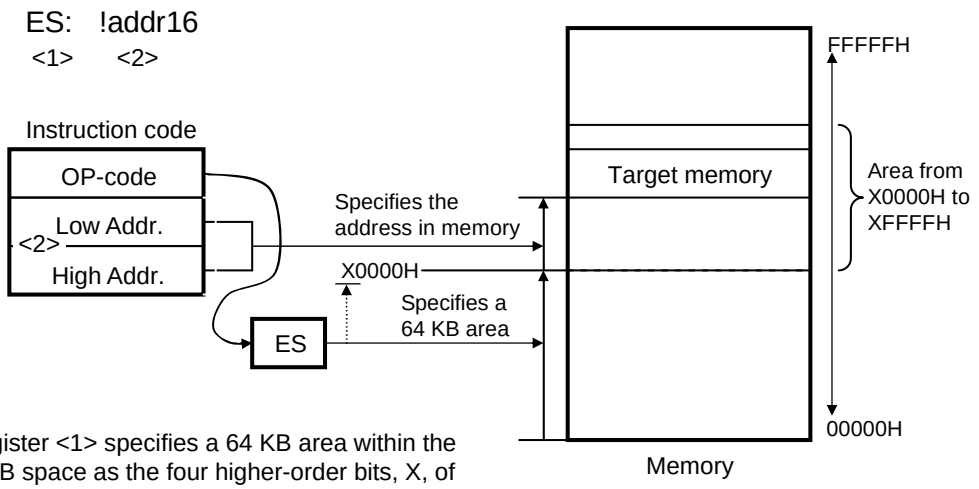

- The ES register <1> specifies a 64 KB area within the overall 1 MB space as the four higher-order bits, X, of the address range.
- A 16-bit address <2> in the area from X0000H to XFFFFH and the ES register <1> specify the target location; this is used for access to fixed data other than that in mirrored areas.

3.4.4 Short direct addressing

[Function]

Short direct addressing directly specifies the target addresses using 8-bit data in the instruction word. This type of addressing is applied only to the space from FFE20H to FFF1FH.

[Operand format]

Identifier	Description
SADDR	Label, FFE20H to FFF1FH immediate data, or 0FE20H to 0FF1FH immediate data (only the space from FFE20H to FFF1FH is specifiable)
SADDRP	Label, FFE20H to FFF1FH immediate data, or 0FE20H to 0FF1FH immediate data (even address only) (only the space from FFE20H to FFF1FH is specifiable)

Figure 3-24. Outline of Short Direct Addressing

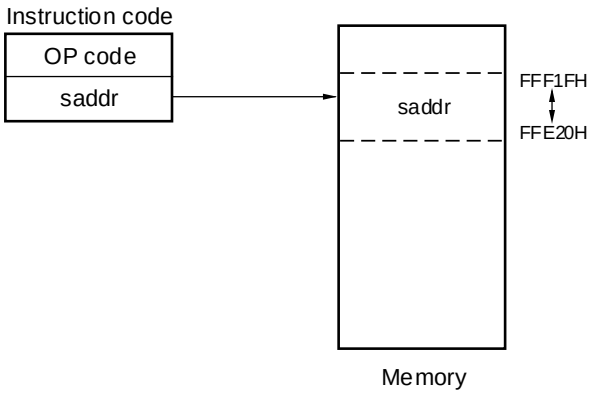

Remark SADDR and SADDRP are used to describe the values of addresses FE20H to FF1FH with 16-bit immediate data (higher 4 bits of actual address are omitted), and the values of addresses FFE20H to FFF1FH with 20-bit immediate data.

Regardless of whether SADDR or SADDRP is used, addresses within the space from FFE20H to FFF1FH are specified for the memory.

3.4.5 SFR addressing

[Function]

SFR addressing directly specifies the target SFR addresses using 8-bit data in the instruction word. This type of addressing is applied only to the space from FFF00H to FFFFFH.

[Operand format]

Identifier	Description
SFR	SFR name
SFRP	16-bit-manipulatable SFR name (even address)

Figure 3-25. Outline of SFR Addressing

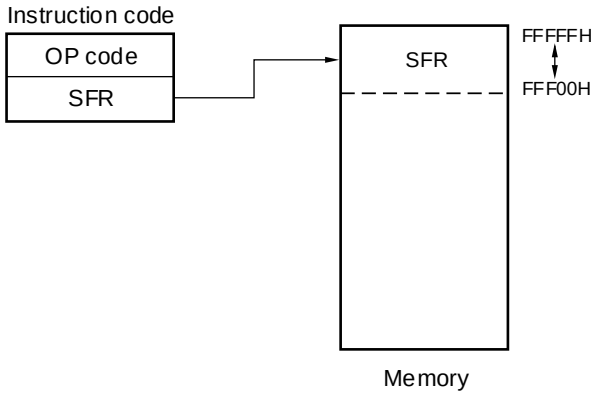

3.4.6 Register indirect addressing

[Function]

Register indirect addressing directly specifies the target addresses using the contents of the register pair specified with the instruction word as an operand address.

[Operand format]

Identifier	Description
–	[DE], [HL] (only the space from F0000H to FFFFFH is specifiable)
–	ES:[DE], ES:[HL] (higher 4-bit addresses are specified by the ES register)

Figure 3-26. Example of [DE], [HL]

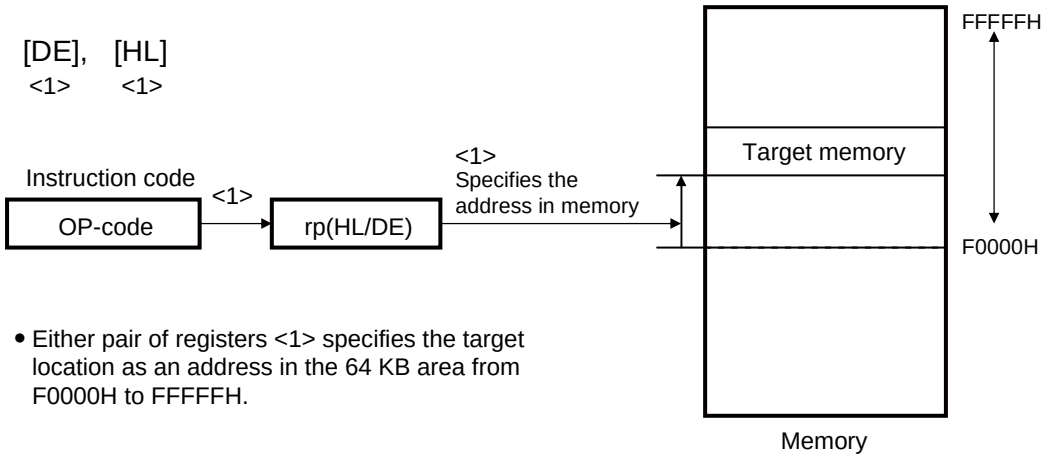

- Either pair of registers <1> specifies the target location as an address in the 64 KB area from F0000H to FFFFFH.

Figure 3-27. Example of ES:[DE], ES:[HL]

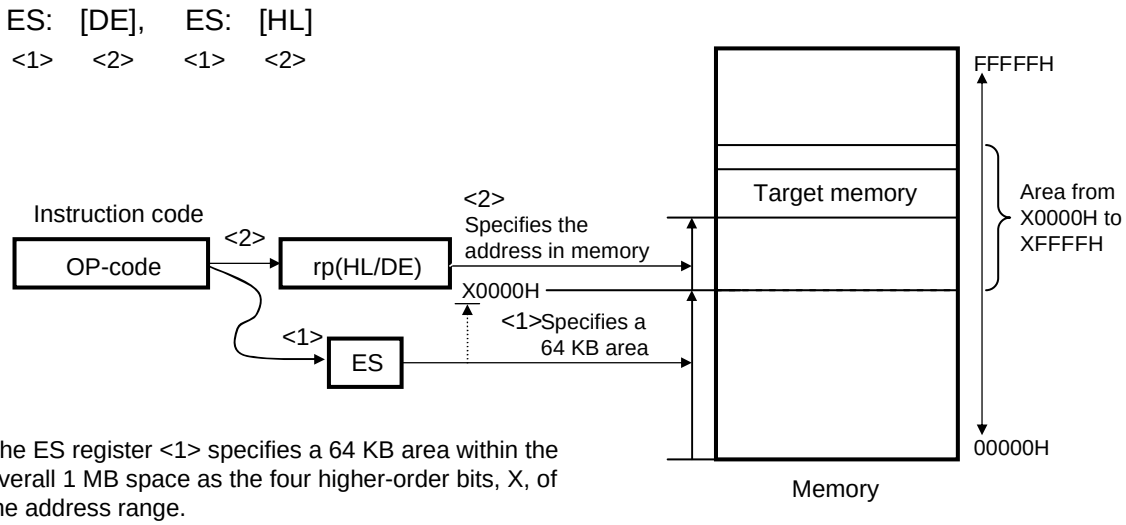

- The ES register <1> specifies a 64 KB area within the overall 1 MB space as the four higher-order bits, X, of the address range.
- Either pair of registers <2> and the ES register <1> specify the target location in the area from X0000H to XFFFFH.

3.4.7 Based addressing

[Function]

Based addressing uses the contents of a register pair specified with the instruction word or 16-bit immediate data as a base address, and 8-bit immediate data or 16-bit immediate data as offset data. The sum of these values is used to specify the target address.

[Operand format]

Identifier	Description
–	[HL + byte], [DE + byte], [SP + byte] (only the space from F0000H to FFFFFH is specifiable)
–	word[B], word[C] (only the space from F0000H to FFFFFH is specifiable)
–	word[BC] (only the space from F0000H to FFFFFH is specifiable)
–	ES:[HL + byte], ES:[DE + byte] (higher 4-bit addresses are specified by the ES register)
–	ES:word[B], ES:word[C] (higher 4-bit addresses are specified by the ES register)
–	ES:word[BC] (higher 4-bit addresses are specified by the ES register)

Figure 3-28. Example of [SP + byte]

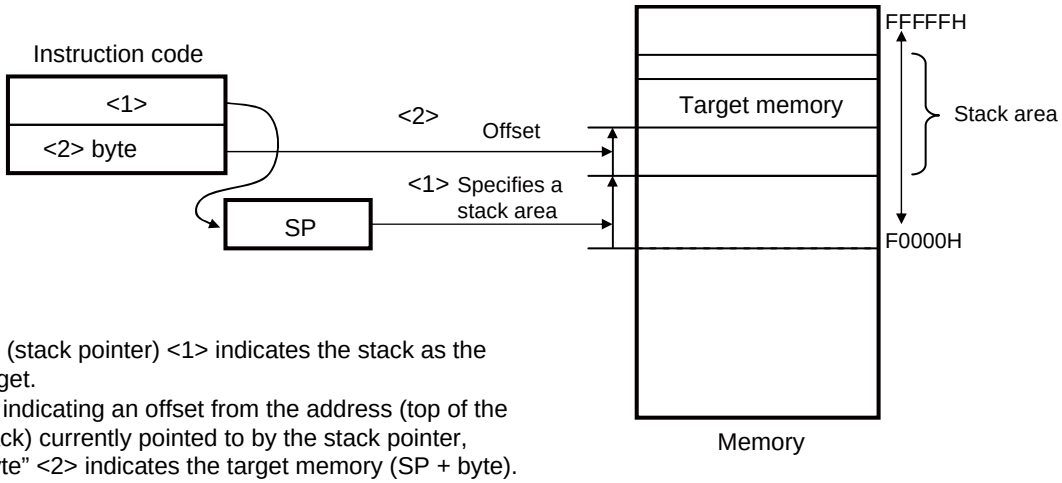

- SP (stack pointer) <1> indicates the stack as the target.
- By indicating an offset from the address (top of the stack) currently pointed to by the stack pointer, “byte” <2> indicates the target memory (SP + byte).

Figure 3-29. Example of [HL + byte], [DE + byte]

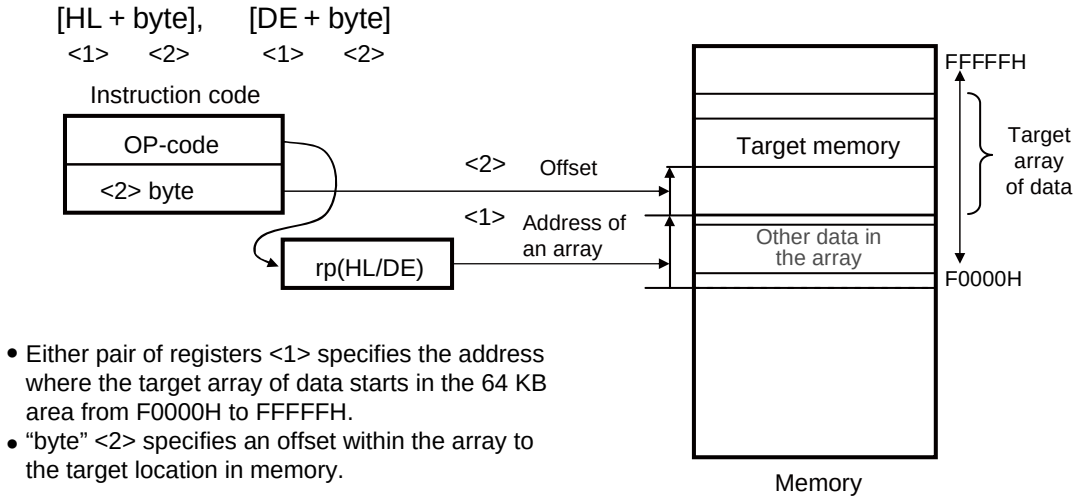

- Either pair of registers <1> specifies the address where the target array of data starts in the 64 KB area from F0000H to FFFFFH.
- "byte" <2> specifies an offset within the array to the target location in memory.

Figure 3-30. Example of word[B], word[C]

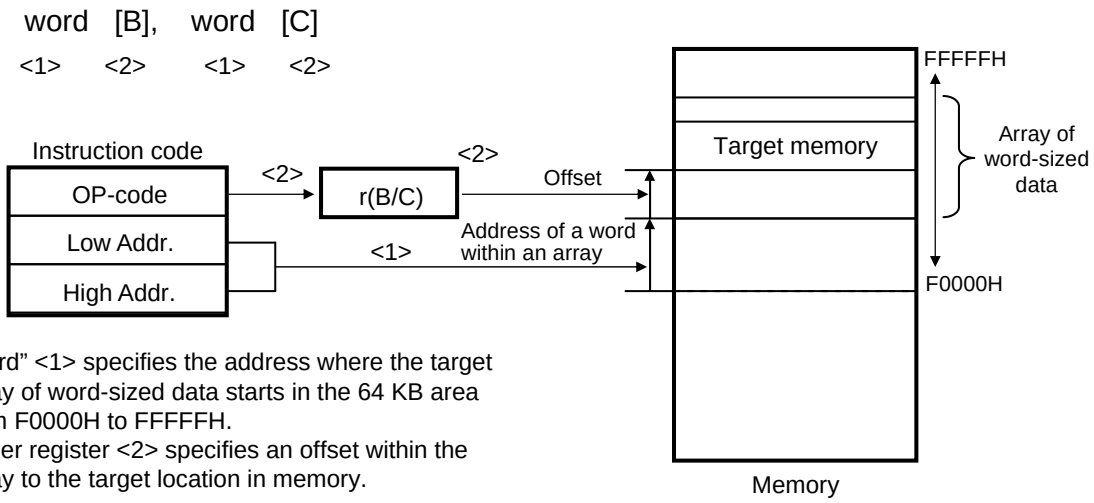

- "word" <1> specifies the address where the target array of word-sized data starts in the 64 KB area from F0000H to FFFFFH.
- Either register <2> specifies an offset within the array to the target location in memory.

Figure 3-31. Example of word[BC]

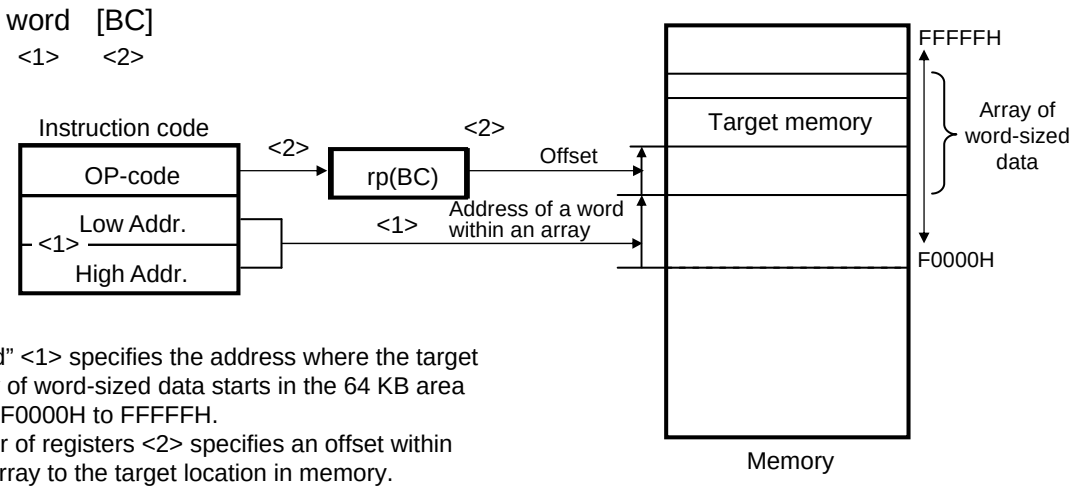

- "word" <1> specifies the address where the target array of word-sized data starts in the 64 KB area from F0000H to FFFFFH.
- A pair of registers <2> specifies an offset within the array to the target location in memory.

Figure 3-32. Example of ES:[HL + byte], ES:[DE + byte]

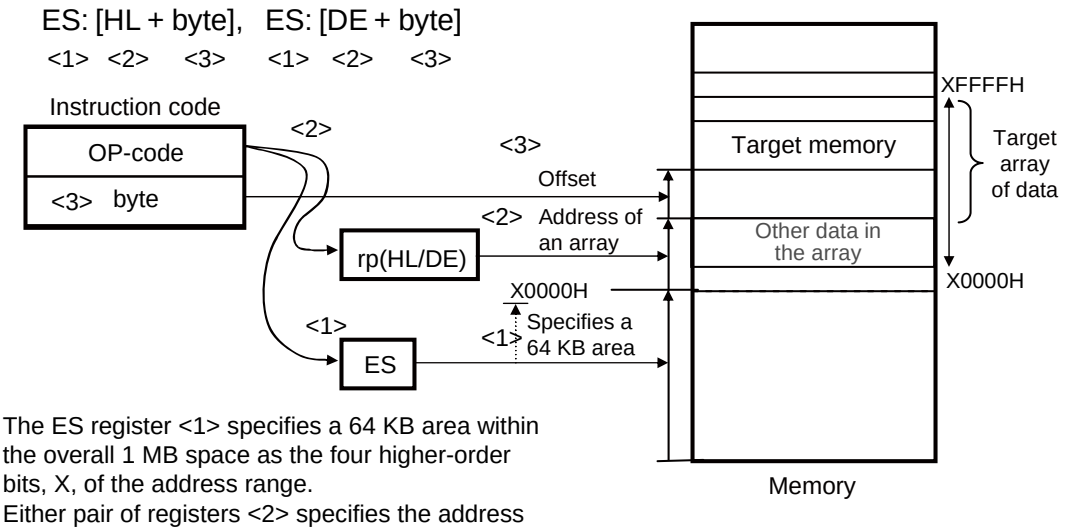

- The ES register <1> specifies a 64 KB area within the overall 1 MB space as the four higher-order bits, X, of the address range.
- Either pair of registers <2> specifies the address where the target array of data starts in the 64 KB area specified in the ES register <1>.
- "byte" <3> specifies an offset within the array to the target location in memory.

Figure 3-33. Example of ES:word[B], ES:word[C]

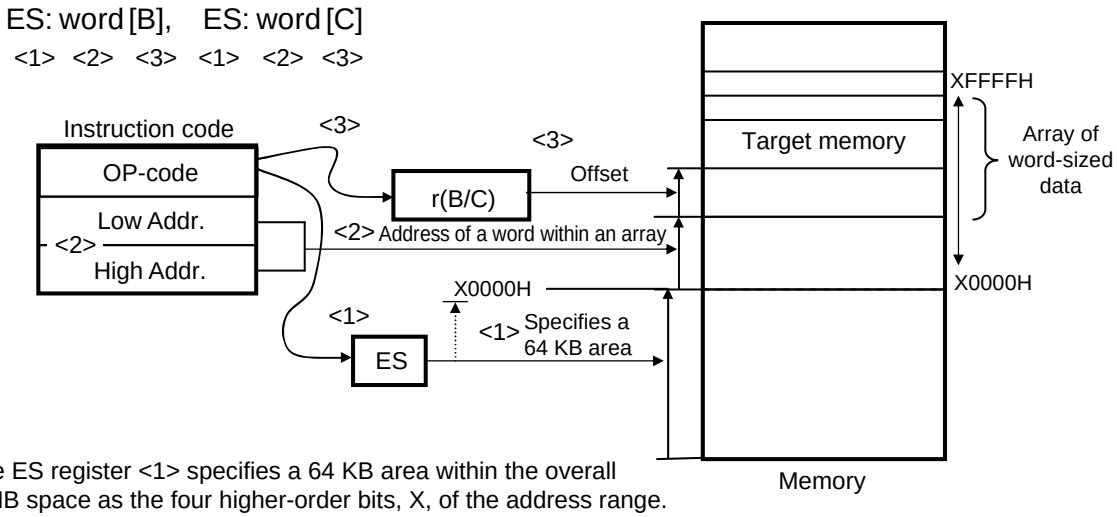

- The ES register <1> specifies a 64 KB area within the overall 1 MB space as the four higher-order bits, X, of the address range.
- "word" <2> specifies the address where the target array of word-sizeddata starts in the 64 KB area specified in the ES register <1>.
- Either register <3> specifies an offset within the array tothe target location in memory.

Figure 3-34. Example of ES:word[BC]

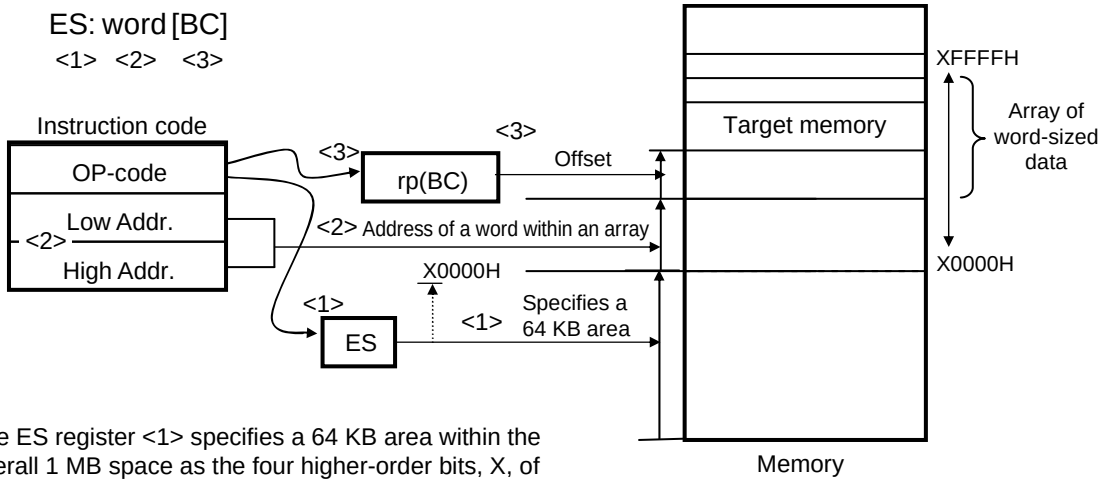

- The ES register <1> specifies a 64 KB area within the overall 1 MB space as the four higher-order bits, X, of the address range.
- “word” <2> specifies the address where the target array of word-sized data starts in the 64 KB area specified in the ES register <1>.
- A pair of registers <3> specifies an offset within the array to the target location in memory.

3.4.8 Based indexed addressing

[Function]

Based indexed addressing uses the contents of a register pair specified with the instruction word as the base address, and the content of the B register or C register similarly specified with the instruction word as offset address. The sum of these values is used to specify the target address.

[Operand format]

Identifier	Description
–	[HL+B], [HL+C] (only the space from F0000H to FFFFFH is specifiable)
–	ES:[HL+B], ES:[HL+C] (higher 4-bit addresses are specified by the ES register)

Figure 3-35. Example of [HL+B], [HL+C]

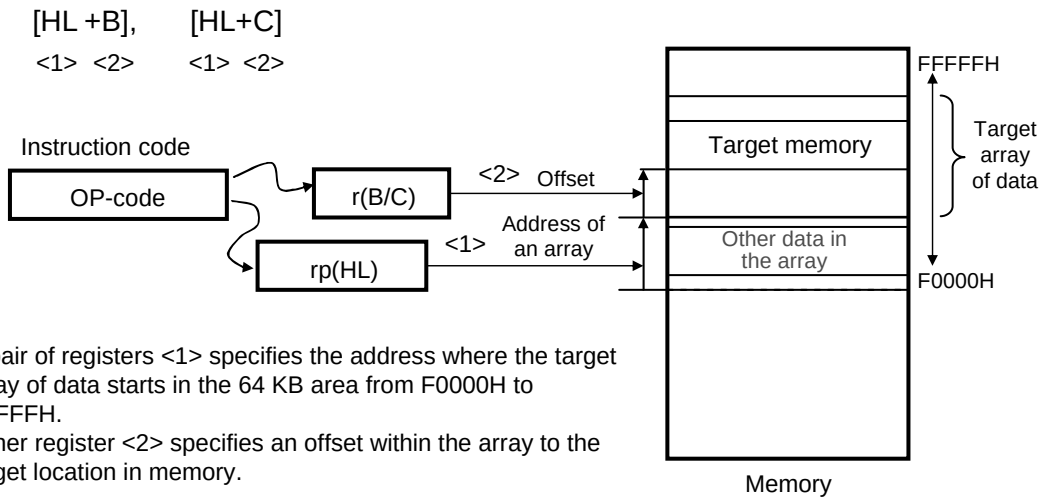

- A pair of registers <1> specifies the address where the target array of data starts in the 64 KB area from F0000H to FFFFFH.
- Either register <2> specifies an offset within the array to the target location in memory.

Figure 3-36. Example of ES:[HL+B], ES:[HL+C]

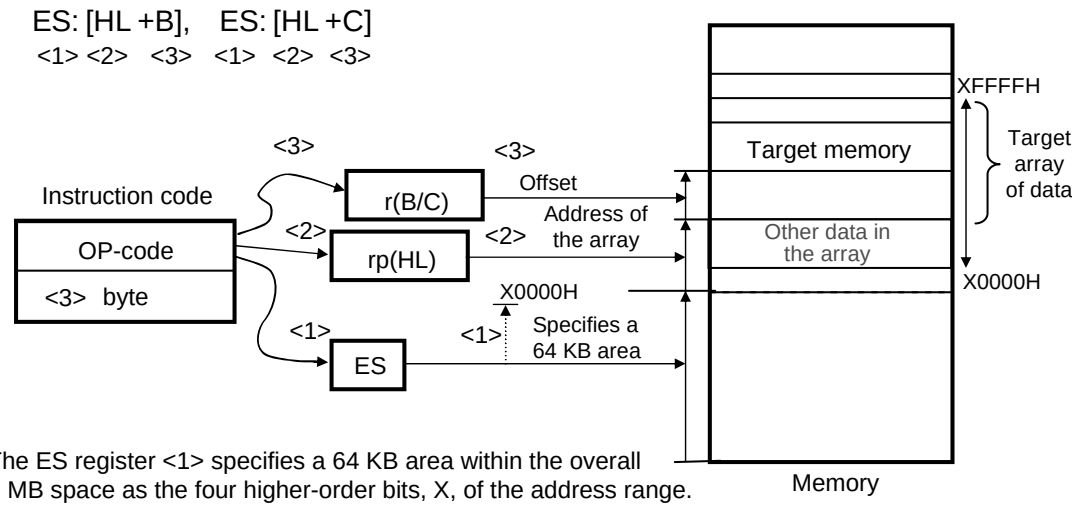

- The ES register <1> specifies a 64 KB area within the overall 1 MB space as the four higher-order bits, X, of the address range.
- A pair of registers <2> specifies the address where the target array of data starts in the 64 KB area specified in the ES register <1>.
- Either register <3> specifies an offset within the array to the target location in memory.

3.4.9 Stack addressing

[Function]

The stack area is indirectly addressed with the stack pointer (SP) values. This addressing is automatically employed when the PUSH, POP, subroutine call, and return instructions are executed or the register is saved/restored upon generation of an interrupt request.

Only the internal RAM area can be set as the stack area.

[Operand format]

Identifier	Description
–	PUSH PSW AX/BC/DE/HL POP PSW AX/BC/DE/HL CALL/CALLT RET BRK RETB (Interrupt request generated) RETI

Each stack operation saves or restores data as shown in **Figures 3-37** to **3-42**.

Figure 3-37. Example of PUSH rp

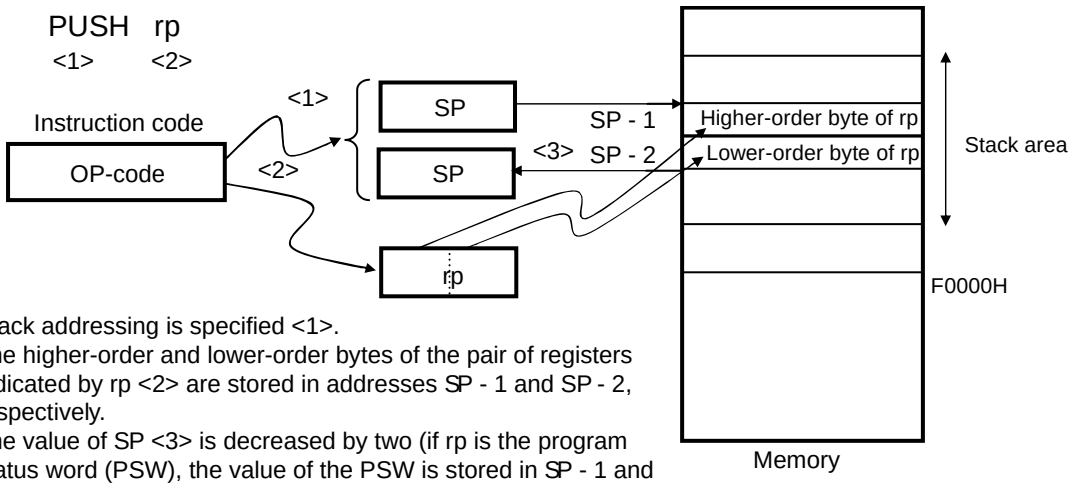

- Stack addressing is specified <1>.
- The higher-order and lower-order bytes of the pair of registers indicated by rp <2> are stored in addresses SP - 1 and SP - 2, respectively.
- The value of SP <3> is decreased by two (if rp is the program status word (PSW), the value of the PSW is stored in SP - 1 and 0 is stored in SP - 2).

Figure 3-38. Example of POP

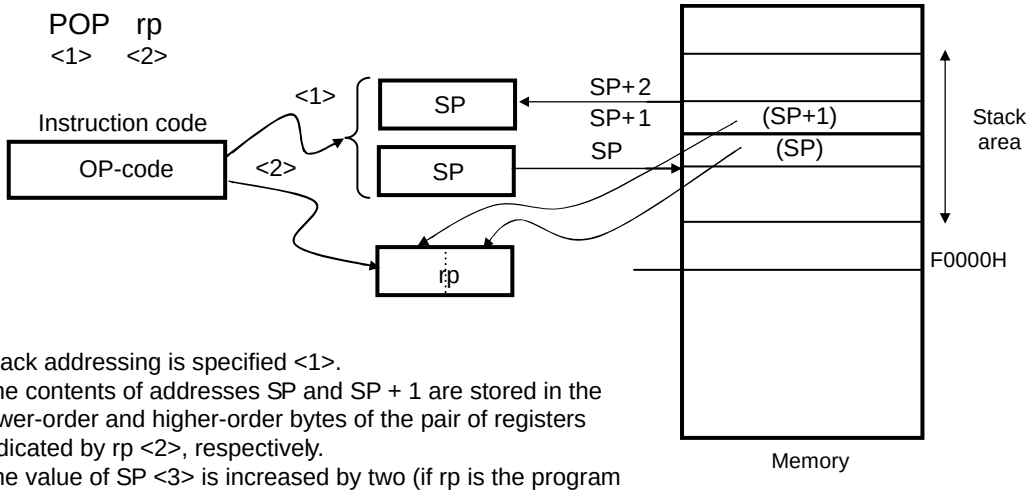

- Stack addressing is specified <1>.
- The contents of addresses SP and SP + 1 are stored in the lower-order and higher-order bytes of the pair of registers indicated by rp <2>, respectively.
- The value of SP <3> is increased by two (if rp is the program status word (PSW), the content of address SP + 1 is stored in the PSW).

Figure 3-39. Example of CALL, CALLT

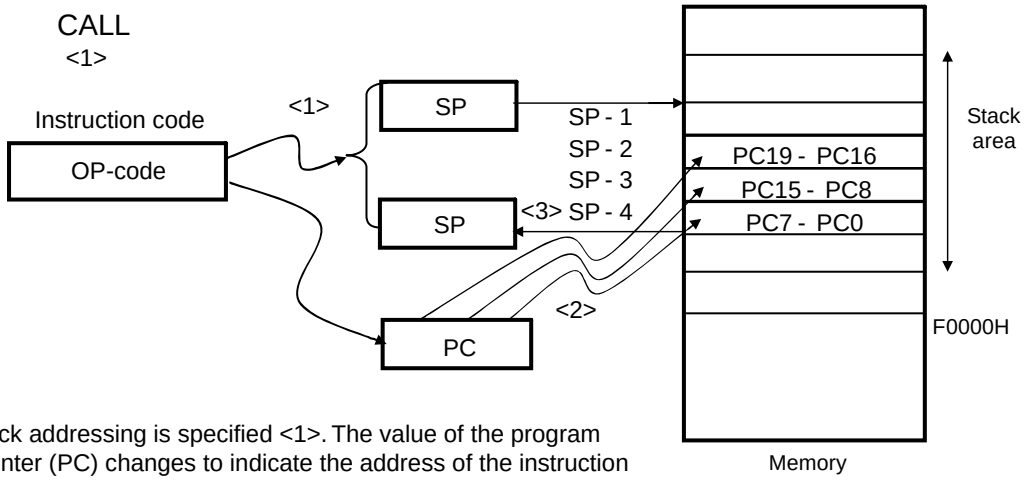

- Stack addressing is specified <1>. The value of the program counter (PC) changes to indicate the address of the instruction following the CALL instruction.
- The values of PC bits 19 to 16, 15 to 8, and 7 to 0 are stored in addresses SP - 1, SP - 2, SP - 3, and SP - 4, respectively <2>.
- The value of the SP <3> is decreased by 4.

Figure 3-40. Example of RET

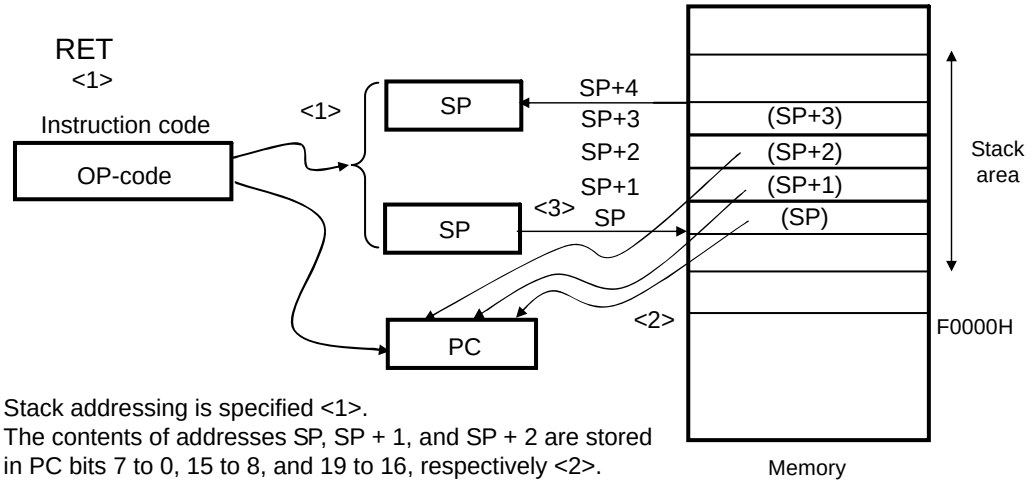

- Stack addressing is specified <1>.
- The contents of addresses SP, SP + 1, and SP + 2 are stored in PC bits 7 to 0, 15 to 8, and 19 to 16, respectively <2>.
- The value of SP <3> is increased by four.

Figure 3-41. Example of Interrupt, BRK

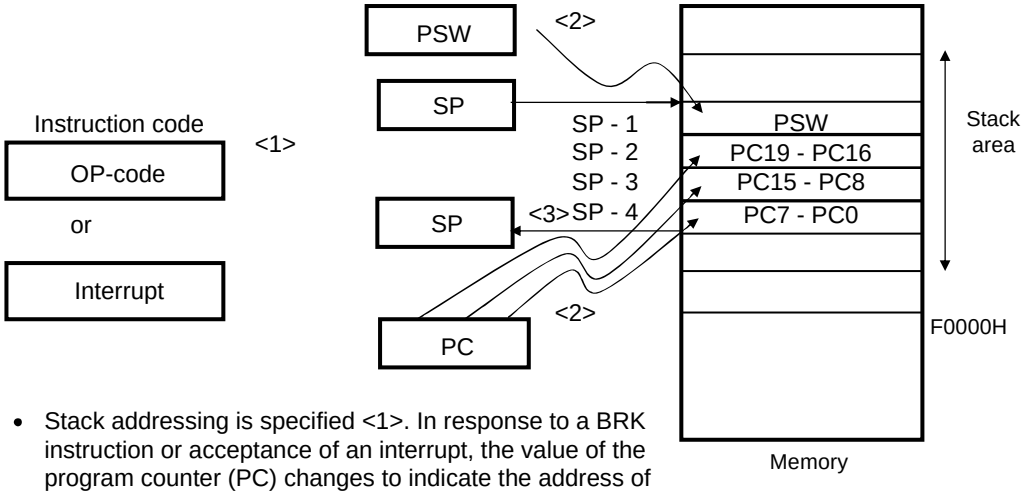

- Stack addressing is specified <1>. In response to a BRK instruction or acceptance of an interrupt, the value of the program counter (PC) changes to indicate the address of the next instruction.
- The values of the PSW, PC bits 19 to 16, 15 to 8, and 7 to 0 are stored in addresses SP - 1, SP - 2, SP - 3, and SP - 4, respectively <2>.
- The value of the SP <3> is decreased by 4.

Figure 3-42. Example of RETI, RETB

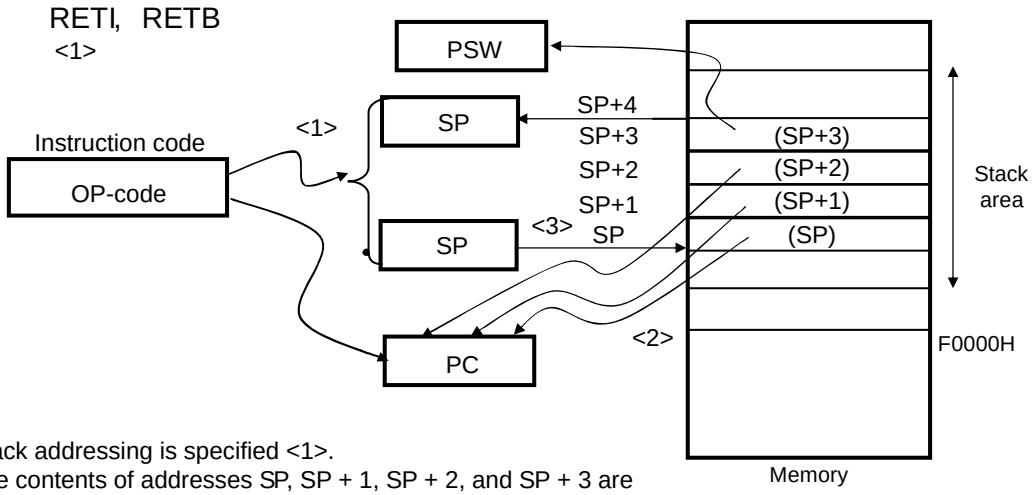

- Stack addressing is specified <1>.
- The contents of addresses SP, SP + 1, SP + 2, and SP + 3 are stored in PC bits 7 to 0, 15 to 8, 19 to 16, and the PSW, respectively <2>.
- The value of SP <3> is increased by four.

CHAPTER 4 PORT FUNCTIONS

4.1 Port Functions

The RL78/L13 microcontrollers are provided with digital I/O ports, which enable variety of control operations.

In addition to the function as digital I/O ports, these ports have several alternate functions. For details of the alternate functions, see **CHAPTER 2 PIN FUNCTIONS**.

4.2 Port Configuration

Ports include the following hardware.

Table 4-1. Port Configuration

Item	Configuration
Control registers	Port mode registers (PM0 to PM7, PM12) Port registers (P0 to P7, P12, P13) Pull-up resistor option registers (PU0 to PU5, PU7, PU12, PU13) Port input mode registers (PIM0, PIM1, PIM3 to PIM5) Port output mode registers (POM0, POM1, POM3 to POM5, POM13) Port mode control registers (PMC1, PMC2, PMC4) A/D port configuration register (ADPC) Peripheral I/O redirection register (PIOR) LCD port function registers (PFSEG0 to PFSEG6) LCD input switch control register (ISCLCD)
Port	● 64-pin products Total: 49 (CMOS I/O: 42 (N-ch open drain I/O [V_{DD} tolerance]: 12), CMOS input: 5, N-ch open drain I/O: 2) ● 80-pin products Total: 65 (CMOS I/O: 58 (N-ch open drain I/O [V_{DD} tolerance]: 18), CMOS input: 5, N-ch open drain I/O: 2)

4.2.1 Port 0

Port 0 is an I/O port with an output latch. Port 0 can be set to the input mode or output mode in 1-bit units using port mode register 0 (PM0). When the P00 to P07 pins are used as an input port, use of an on-chip pull-up resistor can be specified in 1-bit units by pull-up resistor option register 0 (PU0).

Input to the P03, P05 and P06 pins can be specified through a normal input buffer or a TTL input buffer in 1-bit units using port input mode register 0 (PIM0).

Output from the P00 and P04 to P07 pins can be specified as N-ch open-drain output (V_{DD} tolerance) in 1-bit units using port output mode register 0 (POM0).

To use all pins as digital I/O port pins, set them to be used as port (other than segment output) by using LCD port function registers 5, 6 (PFSEG5, PFSEG6) (can be specified in 1-bit units).

This port can also be used for programming UART output, segment output of LCD controller/driver, serial interface data I/O, and clock I/O, timer I/O, clock/buzzer output, external interrupt request input, and comparator output.

Reset signal generation sets port 0 to the digital input invalid mode[Note].

Note "Digital input invalid" refers to the state in which all the digital outputs, digital inputs, analog inputs, and LCD outputs are disabled.

4.2.2 Port 1

Port 1 is an I/O port with an output latch. Port 1 can be set to the input mode or output mode in 1-bit units using port mode register 1 (PM1). When the P10 to P17 pins are used as an input port, use of an on-chip pull-up resistor can be specified in 1-bit units by pull-up resistor option register 1 (PU1).

Input to the P16 and P17 pins can be specified through a normal input buffer or a TTL input buffer in 1-bit units using port input mode register 1 (PIM1).

Output from the P16 and P17 pins can be specified as N-ch open-drain output (V_{DD} tolerance) in 1-bit units using port output mode register 1 (POM1).

To use the P10 to P13 pins as digital I/O port pins, set them in the digital I/O mode by using port mode control register 1 (PMC1) and to be used as port (other than segment output) by using LCD port function register 4 (PFSEG4) (can be specified in 1-bit units).

To use the P14 to P17 pins as digital I/O port pins, set them to be used as port (other than segment output) by using LCD port function register 5 (PFSEG5) (can be specified in 1-bit units).

This port can also be used for A/D converter analog input, segment output of LCD controller/driver, serial interface data I/O, clock I/O, timer I/O, and programming UART input.

Reset signal generation sets the P10 to P13 pins to analog input and the P14 to P17 pins to the digital input invalid mode[Note].

Note "Digital input invalid" refers to the state in which all the digital outputs, digital inputs, analog inputs, and LCD outputs are disabled.

4.2.3 Port 2

Port 2 is an I/O port with an output latch. Port 2 can be set to the input mode or output mode in 1-bit units using port mode register 2 (PM2). When the P22 to P27 pins are used as an input port, use of an on-chip pull-up resistor can be specified in 1-bit units by pull-up resistor option register 2 (PU2).

This port can also be used for A/D converter analog input, (+side and –side) reference voltage input, and segment output of LCD controller/driver.

To use P20/ANI1 and P21/ANI0 as digital input pins, set them in the digital I/O mode by using the A/D port configuration register (ADPC). Use these pins starting from the upper bit.

To use P20/ANI1 and P21/ANI0 as analog input pins, set them in the analog input mode by using the A/D port configuration register (ADPC) and in the input mode by using the PM2 register. Use these pins starting from the lower bit.

Table 4-2. Setting Functions of P20/ANI1 and P21/ANI0 Pins

ADPC Register	PM2 Register	ADS Register	P20/ANI1 and P21/ANI0 Pins
Digital I/O selection	Input mode	–	Digital input
	Output mode	–	Digital output
Analog input selection	Input mode	Selects ANI.	Analog input (to be converted)
		Does not select ANI.	Analog input (not to be converted)
	Output mode	Selects ANI.	Setting prohibited
		Does not select ANI.	

To use the P22 to P27 pins as digital I/O port pins, set them in the digital I/O mode by using port mode control register 2 (PMC2) and to be used as port (other than segment output) by using LCD port function registers 3, 4 (PFSEG3, PFSEG4) (can be specified in 1-bit units).

P20 to P27 are set in the analog input mode when the reset signal is generated.

4.2.4 Port 3

Port 3 is an I/O port with an output latch. Port 3 can be set to the input mode or output mode in 1-bit units using port mode register 3 (PM3). When the P30 to P35 pins are used as an input port, use of an on-chip pull-up resistor can be specified in 1-bit units by pull-up resistor option register 3 (PU3).

Input to the P34 pin can be specified through a normal input buffer or a TTL input buffer using port input mode register 3 (PIM3).

Output from the P35 pins can be specified as N-ch open-drain output (V_{DD} tolerance) using port output mode register 3 (POM3).

To use the P30 to P35 pins as digital I/O port pins, set them to be used as port (other than segment output) by using LCD port function registers 2, 3 (PFSEG2, PFSEG3) (can be specified in 1-bit units).

This port can also be used for external interrupt request input, real-time clock 2 correction clock output, timer I/O, remote controller output, segment output of LCD controller/driver, and serial interface data I/O.

Reset signal generation sets port 3 to the digital input invalid mode[Note].

Note "Digital input invalid" refers to the state in which all the digital outputs, digital inputs, analog inputs, and LCD outputs are disabled.

4.2.5 Port 4

Port 4 is an I/O port with an output latch. Port 4 can be set to the input mode or output mode in 1-bit units using port mode register 4 (PM4). When the P40 to P47 pins are used as an input port, use of an on-chip pull-up resistor can be specified in 1-bit units by pull-up resistor option register 4 (PU4).

Input to the P43, P44, P46, and P47 pins can be specified through a normal input buffer or a TTL input buffer in 1-bit units using port input mode register 4 (PIM4).

Output from the P42 to P44, P46, and P47 pins can be specified as N-ch open-drain output (V_{DD} tolerance) in 1-bit units using port output mode register 4 (POM4).

To use the P45 pin as a digital I/O port pin, set it to be used as port (other than segment output) by using bit 2 (PFDEG) of LCD port function register 3 (PFSEG3).

To use the P46 and P47 pins as digital I/O port pins, set them to be used as port (other than segment output) by using LCD port function register 3 (PFSEG3) (can be specified in 1-bit units).

This port can also be used for serial interface data I/O, clock I/O, data I/O for a flash memory programmer/debugger, timer I/O, comparator reference voltage input, and comparator analog voltage input, and segment output of LCD controller/driver.

Reset signal generation sets the P40 to P44 pins to input mode and the P45 to P47 pins to the digital input invalid mode[Note].

Note "Digital input invalid" refers to the state in which all the digital outputs, digital inputs, analog inputs, and LCD outputs are disabled.

4.2.6 Port 5

Port 5 is an I/O port with an output latch. Port 5 can be set to the input mode or output mode in 1-bit units using port mode register 5 (PM5). When the P50 to P57 pins are used as an input port, use of an on-chip pull-up resistor can be specified in 1-bit units by pull-up resistor option register 5 (PU5).

Input to the P53 and P55 pins can be specified through a normal input buffer or a TTL input buffer in 1-bit units using port input mode register 5 (PIM5).

Output from the P53 to P56 pin can be specified as N-ch open-drain output (V_{DD} tolerance) in 1-bit units using port output mode register 5 (POM5).

To use all pins as digital I/O port pins, set them to be used as port (other than segment output) by using LCD port function registers 0, 1 (PFSEG0, PFSEG1) (can be specified in 1-bit units).

This port can also be used for segment output of LCD controller/driver, timer I/O, and external interrupt request input.

Reset signal generation sets port 5 to the digital input invalid mode[Note].

Note "Digital input invalid" refers to the state in which all the digital outputs, digital inputs, analog inputs, and LCD outputs are disabled.

4.2.7 Port 6

Port 6 is an I/O port with an output latch. Port 6 can be set to the input mode or output mode in 1-bit units using port mode register 6 (PM6).

The output of the P60 and P61 pins is N-ch open-drain output (6 V tolerance).

This port can also be used for serial interface data I/O, clock I/O, and timer I/O.

Reset signal generation sets port 6 to input mode.

4.2.8 Port 7

Port 7 is an I/O port with an output latch. Port 7 can be set to the input mode or output mode in 1-bit units using port mode register 7 (PM7). When used as an input port, use of an on-chip pull-up resistor can be specified in 1-bit units by pull-up resistor option register 7 (PU7).

To use all pins as digital I/O port pins, set them to be used as port (other than segment output) by using LCD port function registers 1, 2 (PFSEG1, PFSEG2) (can be specified in 1-bit units).

This port can also be used for key interrupt input, timer I/O, segment output of LCD controller/driver,

Reset signal generation sets port 7 to the digital input invalid mode[Note].

Note "Digital input invalid" refers to the state in which all the digital outputs, digital inputs, analog inputs, and LCD outputs are disabled.

4.2.9 Port 12

P125 to P127 are a 3-bit I/O port with an output latch. Port 12 can be set to the input mode or output mode in 1-bit units using port mode register 12 (PM12). When used as an input port, use of an on-chip pull-up resistor can be specified by pull-up resistor option register 12 (PU12).

P121 to P124 are 4-bit input-only ports.

To use the P125 to P127 pins as digital I/O pins, set them in the digital input valid mode by using the LCD input switch control register (ISCLCD) (can be specified in 1-bit units).

This port can also be used for connecting resonator for main system clock, connecting resonator for subsystem clock, external clock input for main system clock, external clock input for subsystem clock, remote control output, timer I/O, connecting a capacitor for LCD controller/driver, and power supply voltage pin for driving the LCD.

Reset signal generation sets P121 to P124 to input mode. P125 to P127 are set in the digital invalid mode[Note].

Note "Digital input invalid" refers to the state in which all the digital outputs, digital inputs, analog inputs, and LCD outputs are disabled.

4.2.10 Port 13

P130 is an I/O port with an output latch. P130 can be set to the input mode or output mode in 1-bit units using port mode register 13 (PM13). When used as an input port, use of an on-chip pull-up resistor can be specified in 1-bit units by pull-up resistor option register 13 (PU13).

P137 is a 1-bit input-only port.

To use the P130 pin as a digital I/O port pin, set it to be used as port (other than segment output) by using LCD port function register 3 (PFSEG3).

This port can also be used for external interrupt request input, serial interface data output, segment output of LCD controller/driver, and serial interface data output,

Reset signal generation sets the P137 pin to input mode and the P130 pin to the digital input invalid mode[Note].

Note "Digital input invalid" refers to the state in which all the digital outputs, digital inputs, analog inputs, and LCD outputs are disabled.

4.3 Registers Controlling Port Function

Port functions are controlled by the following registers.

- Port mode registers (PMxx)
- Port registers (Pxx)
- Pull-up resistor option registers (PUxx)
- Port input mode registers (PIMxx)
- Port output mode registers (POMxx)
- Port mode control registers (PMCxx)
- A/D port configuration register (ADPC)
- Peripheral I/O redirection register (PIOR)
- LCD port function registers (PFSEG0 to PFSEG6)
- LCD input switch control register (ISCLCD)

Caution Which registers and bits are included depends on the product. For registers and bits mounted on each product, see Table 4-3. Be sure to set bits that are not mounted to their initial values.

Table 4-3. PMxx, Pxx, PUxx, PIMxx, POMxx, and PMCxx Registers and Bits Mounted on Each Product (1/3)

Port		Bit Name						80 Pin	64 Pin
		PMxx Register	Pxx Register	PUxx Register	PIMxx Register	POMxx Register	PMCxx Register		
Port 0	0	PM00	P00	PU00	–	POM00	–	√	√
	1	PM01	P01	PU01	–	–	–	√	√
	2	PM02	P02	PU02	–	–	–	√	√
	3	PM03	P03	PU03	PIM03	–	–	√	√
	4	PM04	P04	PU04	–	POM04	–	√	√
	5	PM05	P05	PU05	PIM05	POM05	–	√	√
	6	PM06	P06	PU06	PIM06	POM06	–	√	√
	7	PM07	P07	PU07	–	POM07	–	√	√
Port 1	0	PM10	P10	PU10	–	–	PMC10	√	√
	1	PM11	P11	PU11	–	–	PMC11	√	√
	2	PM12	P12	PU12	–	–	PMC12	√	√
	3	PM13	P13	PU13	–	–	PMC13	√	√
	4	PM14	P14	PU14	–	–	–	√	√
	5	PM15	P15	PU15	–	–	–	√	√
	6	PM16	P16	PU16	PIM16	POM16	–	√	√
	7	PM17	P17	PU17	PIM17	POM17	–	√	√
Port 2	0	PM20	P20	–	–	–	–	√	√
	1	PM21	P21	–	–	–	–	√	√
	2	PM22	P22	PU22	–	–	PMC22	√	√
	3	PM23	P23	PU23	–	–	PMC23	√	–
	4	PM24	P24	PU24	–	–	PMC24	√	–
	5	PM25	P25	PU25	–	–	PMC25	√	–
	6	PM26	P26	PU26	–	–	PMC26	√	√
	7	PM27	P27	PU27	–	–	PMC27	√	√
Port 3	0	PM30	P30	PU30	–	–	–	√	√
	1	PM31	P31	PU31	–	–	–	√	√
	2	PM32	P32	PU32	–	–	–	√	√
	3	PM33	P33	PU33	–	–	–	√	√
	4	PM34	P34	PU34	PIM34	–	–	√	–
	5	PM35	P35	PU35	–	POM35	–	√	–
	6	–	–	–	–	–	–	–	–
	7	–	–	–	–	–	–	–	–

Table 4-3. PMxx, Pxx, PUxx, PIMxx, POMxx, and PMCxx Registers and Bits Mounted on Each Product (2/3)

Port		Bit Name						80 Pin	64 Pin
		PMxx Register	Pxx Register	PUxx Register	PIMxx Register	POMxx Register	PMCxx Register		
Port 4	0	PM40	P40	PU40	–	–	–	√	√
	1	PM41	P41	PU41	–	–	–	√	–
	2	PM42	P42	PU42	–	POM42	PMC42	√	√
	3	PM43	P43	PU43	PIM43	POM43	PMC43	√	√
	4	PM44	P44	PU44	PIM44	POM44	PMC44	√	√
	5	PM45	P45	PU45	–	–	PMC45	√	√
	6	PM46	P46	PU46	PIM46	POM46	–	√	–
	7	PM47	P47	PU47	PIM47	POM47	–	√	–
Port 5	0	PM50	P50	PU50	–	–	–	√	–
	1	PM51	P51	PU51	–	–	–	√	–
	2	PM52	P52	PU52	–	–	–	√	√
	3	PM53	P53	PU53	PIM53	POM53	–	√	√
	4	PM54	P54	PU54	–	POM54	–	√	√
	5	PM55	P55	PU55	PIM55	POM55	–	√	–
	6	PM56	P56	PU56	–	POM56	–	√	–
	7	PM57	P57	PU57	–	–	–	√	√
Port 6	0	PM60	P60	–	–	–	–	√	√
	1	PM61	P61	–	–	–	–	√	√
	2	–	–	–	–	–	–	–	–
	3	–	–	–	–	–	–	–	–
	4	–	–	–	–	–	–	–	–
	5	–	–	–	–	–	–	–	–
	6	–	–	–	–	–	–	–	–
	7	–	–	–	–	–	–	–	–
Port 7	0	PM70	P70	PU70	–	–	–	√	√
	1	PM71	P71	PU71	–	–	–	√	–
	2	PM72	P72	PU72	–	–	–	√	–
	3	PM73	P73	PU73	–	–	–	√	–
	4	PM74	P74	PU74	–	–	–	√	√
	5	PM75	P75	PU75	–	–	–	√	√
	6	PM76	P76	PU76	–	–	–	√	√
	7	PM77	P77	PU77	–	–	–	√	√

Table 4-3. PMxx, Pxx, PUxx, PIMxx, POMxx, and PMCxx Registers and Bits Mounted on Each Product (3/3)

Port		Bit Name						80 Pin	64 Pin
		PMxx Register	Pxx Register	PUxx Register	PIMxx Register	POMxx Register	PMCxx Register		
Port 12	0	–	–	–	–	–	–	–	–
	1	–	P121	–	–	–	–	√	√
	2	–	P122	–	–	–	–	√	√
	3	–	P123	–	–	–	–	√	√
	4	–	P124	–	–	–	–	√	√
	5	PM125	P125	PU125	–	–	–	√	√
	6	PM126	P126	PU126	–	–	–	√	√
	7	PM127	P127	PU127	–	–	–	√	√
Port 13	0	PM130	P130	PU130	–	POM130	–	√	–
	1	–	–	–	–	–	–	–	–
	2	–	–	–	–	–	–	–	–
	3	–	–	–	–	–	–	–	–
	4	–	–	–	–	–	–	–	–
	5	–	–	–	–	–	–	–	–
	6	–	–	–	–	–	–	–	–
	7	–	P137	–	–	–	–	√	√

4.3.1 Port mode registers (PMxx)

These registers specify input or output mode for the port in 1-bit units.

These registers can be set by a 1-bit or 8-bit memory manipulation instruction.

Reset signal generation sets these registers to FFH.

When port pins are used as alternate-function pins, set the port mode register by referencing **4.5 Register Settings When Using Alternate Function**.

Figure 4-1. Format of Port Mode Register

Symbol	7	6	5	4	3	2	1	0	Address	After reset	R/W
PM0	PM07	PM06	PM05	PM04	PM03	PM02	PM01	PM00	FFF20H	FFH	R/W
PM1	PM17	PM16	PM15	PM14	PM13	PM12	PM11	PM10	FFF21H	FFH	R/W
PM2	PM27	PM26	PM25	PM24	PM23	PM22	PM21	PM20	FFF22H	FFH	R/W
PM3	1	1	PM35	PM34	PM33	PM32	PM31	PM30	FFF23H	FFH	R/W
PM4	PM47	PM46	PM45	PM44	PM43	PM42	PM41	PM40	FFF24H	FFH	R/W
PM5	PM57	PM56	PM55	PM54	PM53	PM52	PM51	PM50	FFF25H	FFH	R/W
PM6	1	1	1	1	1	1	PM61	PM60	FFF26H	FFH	R/W
PM7	PM77	PM76	PM75	PM74	PM73	PM72	PM71	PM70	FFF27H	FFH	R/W
PM12	PM127	PM126	PM125	1	1	1	1	1	FFF2CH	FFH	R/W
PM13	1	1	1	1	1	1	1	PM130	FFF2DH	FFH	R/W

PMmn	Pmn pin I/O mode selection (m = 0 to 7, 12, 13; n = 0 to 7)
0	Output mode (output buffer on)
1	Input mode (output buffer off)

Caution Be sure to set bits that are not mounted to their initial values.

4.3.2 Port registers (Pxx)

These registers set the output latch value of a port.

If the data is read in the input mode, the pin level is read. If it is read in the output mode, the output latch value is read[Note].

These registers can be set by a 1-bit or 8-bit memory manipulation instruction.

Reset signal generation clears these registers to 00H.

Note If P10 to P13, P20 to P27 are set up as analog inputs of the A/D converter, or P42 to P45 are set up as analog inputs of the comparator, when a port is read while in the input mode, 0 is always returned, not the pin level.

Figure 4-2. Format of Port Register

Symbol	7	6	5	4	3	2	1	0	Address	After reset	R/W
P0	P07	P06	P05	P04	P03	P02	P01	P00	FFF00H	00H (output latch)	R/W
P1	P17	P16	P15	P14	P13	P12	P11	P10	FFF01H	00H (output latch)	R/W
P2	P27	P26	P25	P24	P23	P22	P21	P20	FFF02H	00H (output latch)	R/W
P3	0	0	P35	P34	P33	P32	P31	P30	FFF03H	00H (output latch)	R/W
P4	P47	P46	P45	P44	P43	P42	P41	P40	FFF04H	00H (output latch)	R/W
P5	P57	P56	P55	P54	P53	P52	P51	P50	FFF05H	00H (output latch)	R/W
P6	0	0	0	0	0	0	P61	P60	FFF06H	00H (output latch)	R/W
P7	P77	P76	P75	P74	P73	P72	P71	P70	FFF07H	00H (output latch)	R/W
P12	P127	P126	P125	P124	P123	P122	P121	0	FFF0CH	Undefined	R/W[Note 1]
P13	P137	0	0	0	0	0	0	P130	FFF0DH	**Note 2**	R/W[Note 1]

Pmn	Output data control (in output mode)	Input data read (in input mode)
0	Output 0	Input low level
1	Output 1	Input high level

Notes 1. P121 to P124, and P137 are read-only.

2. P137: Undefined
P130: 0 (output latch)

Caution Be sure to set bits that are not mounted to their initial values.

Remark m = 0 to 7, 12, 13 ; n = 0 to 7

4.3.3 Pull-up resistor option registers (PUxx)

These registers specify whether the on-chip pull-up resistors are to be used or not. On-chip pull-up resistors can be used in 1-bit units only for the bits set to normal output mode (POMmn = 0) and input mode (PMmn = 1) for the pins to which the use of an on-chip pull-up resistor has been specified in these registers. On-chip pull-up resistors cannot be connected to bits set to output mode and bits used as alternate-function output pins and analog setting (PMC = 1, ADPC = 1), regardless of the settings of these registers.

These registers can be set by a 1-bit or 8-bit memory manipulation instruction.

Reset signal generation clears these registers to 00H (Only PU4 is set to 01H).

Caution When a port with the PIMn register is input from different potential device to TTL buffer, pull up to the power supply of the different potential device via an external pull-up resistor by setting PUmn = 0.

Figure 4-3. Format of Pull-up Resistor Option Register

Symbol	7	6	5	4	3	2	1	0	Address	After reset	R/W
PU0	PU07	PU06	PU05	PU04	PU03	PU02	PU01	PU00	F0030H	00H	R/W
PU1	PU17	PU16	PU15	PU14	PU13	PU12	PU11	PU10	F0031H	00H	R/W
PU2	PU27	PU26	PU25	PU24	PU23	PU22	0	0	F0032H	00H	R/W
PU3	0	0	PU35	PU34	PU33	PU32	PU31	PU30	F0033H	00H	R/W
PU4	PU47	PU46	PU45	PU44	PU43	PU42	PU41	PU40	F0034H	01H	R/W
PU5	PU57	PU56	PU55	PU54	PU53	PU52	PU51	PU50	F0035H	00H	R/W
PU7	PU77	PU76	PU75	PU74	PU73	PU72	PU71	PU70	F0037H	00H	R/W
PU12	PU127	PU126	PU125	0	0	0	0	0	F003CH	00H	R/W
PU13	0	0	0	0	0	0	0	PU130	F003DH	00H	R/W

PUmn	Pmn pin on-chip pull-up resistor selection (m = 0 to 5, 7, 12, 13 ; n = 0 to 7)
0	On-chip pull-up resistor not connected
1	On-chip pull-up resistor connected

Caution Be sure to set bits that are not mounted to their initial values.

4.3.4 Port input mode registers (PIMxx)

These registers set the input buffer in 1-bit units.

TTL input buffer can be selected during serial communication with an external device of the different potential.

Port input mode registers can be set by a 1-bit or 8-bit memory manipulation instruction.

Reset signal generation clears these registers to 00H.

Figure 4-4. Format of Port Input Mode Register

Symbol	7	6	5	4	3	2	1	0	Address	After reset	R/W
PIM0	0	PIM06	PIM05	0	PIM03	0	0	0	F0040H	00H	R/W
PIM1	PIM17	PIM16	0	0	0	0	0	0	F0041H	00H	R/W
PIM3	0	0	0	PIM34	0	0	0	0	F0043H	00H	R/W
PIM4	PIM47	PIM46	0	PIM44	PIM43	0	0	0	F0044H	00H	R/W
PIM5	0	0	PIM55	0	PIM53	0	0	0	F0045H	00H	R/W

PIMmn	Pmn pin input buffer selection (m = 0, 1, 3 to 5 ; n = 3 to 7)
0	Normal input buffer
1	TTL input buffer

Caution Be sure to set bits that are not mounted to their initial values.

4.3.5 Port output mode registers (POMxx)

These registers set the output mode in 1-bit units.

N-ch open drain output (V_{DD} tolerance) mode can be selected during serial communication with an external device of the different potential, and for the SDA00 and SDA10 pins during simplified I^2C communication with an external device of the same potential.

In addition, POMxx register is set with PUxx register, whether or not to use the on-chip pull-up resistor.

These registers can be set by a 1-bit or 8-bit memory manipulation instruction.

Reset signal generation clears these registers to 00H.

Caution An on-chip pull-up resistor is not connected to a bit for which N-ch open drain output (V_{DD} tolerance) mode (POMmn = 1) is set.

Figure 4-5. Format of Port Input Mode Register

Symbol	7	6	5	4	3	2	1	0	Address	After reset	R/W
POM0	POM07	POM06	POM05	POM04	0	0	0	POM00	F0050H	00H	R/W
POM1	POM17	POMJ16	0	0	0	0	0	0	F0051H	00H	R/W
POM3	0	0	POM35	0	0	0	0	0	F0053H	00H	R/W
POM4	POM47	POM46	0	POM44	POM43	POM42	0	0	F0054H	00H	R/W
POM5	0	POM56	POM55	POM54	POM53	0	0	0	F0055H	00H	R/W
POM13	0	0	0	0	0	0	0	POM130	F005DH	00H	R/W

POMmn	Pmn pin output mode selection (m = 0, 1, 3 to 5, 13 ; n = 0, 2 to 7)
0	Normal output mode
1	N-ch open-drain output (V_{DD} tolerance) mode

Caution Be sure to set bits that are not mounted to their initial values.

4.3.6 Port mode control registers (PMCxx)

These registers set the digital I/O/analog input in 1-bit units.

These registers can be set by a 1-bit or 8-bit memory manipulation instruction.

Reset signal generation clears these registers to FFH (only PMC4 is set to 00H).

Figure 4-6. Format of Port Mode Control Register

Symbol	7	6	5	4	3	2	1	0	Address	After reset	R/W
PMC1	1	1	1	1	PMC13	PMC12	PMC11	PMC10	F0061H	FFH	R/W
PMC2	PMC27	PMC26	PMC25	PMC24	PMC23	PMC22	1	1	F0062H	FFH	R/W
PMC4	0	0	PMC45	PMC44	PMC43	PMC42	0	0	F0064H	00H	R/W

PMCmn	Pmn pin digital I/O/analog input selection (m = 1, 2, 4; n = 0 to 7)
0	Digital I/O (alternate function other than analog input)
1	Analog input

Cautions 1. Select input mode by using port mode registers 1, 2, and 4 (PM1, PM2, and PM4) for the ports which are set by the PMCxx register as analog input.

2. Do not set the pin set by the PMC register as digital I/O by the analog input channel specification register (ADS).

3. Be sure to set bits that are not mounted to their initial values.

4.3.7 A/D port configuration register (ADPC)

This register switches the ANI0/P21, ANI1/P20 pins to digital I/O of port or analog input of A/D converter.

The ADPC register can be set by an 8-bit memory manipulation instruction.

Reset signal generation sets this register to 00H.

Figure 4-7. Format of A/D Port Configuration Register (ADPC)

Address: F0076H After reset: 00H R/W

Symbol	7	6	5	4	3	2	1	0
ADPC	0	0	0	0	0	0	ADPC1	ADPC0

ADPC1	ADPC0	Analog input (A)/digital I/O (D) switching	
		ANI1/P20	ANI0/P21
0	0	A	A
0	1	D	D
1	0	D	A
1	1	Setting prohibited	

Cautions 1. Set the port to analog input by ADPC register to the input mode by using port mode register 2 (PM2).

2. Do not set the pin set by the ADPC register as digital I/O by the analog input channel specification register (ADS).

3. When using AV_{REFP} and AV_{REFM}, set ANI0 and ANI1 to analog input and set the port mode register to the input mode.

4.3.8 Peripheral I/O redirection register (PIOR)

This register is used to specify whether to enable or disable the peripheral I/O redirect function.

This function is used to switch ports to which alternate functions are assigned.

Use the PIOR register to assign a port to the function to redirect and enable the function.

In addition, can be changed the settings for redirection until its function enable operation.

The PIOR register can be set by an 8-bit memory manipulation instruction.

Reset signal generation sets this register to 00H.

Figure 4-8. Format of Peripheral I/O Redirection Register (PIOR)

Address: F0077H After reset: 00H R/W

Symbol	7	6	5	4	3	2	1	0
PIOR	0	0	0	PIOR4	PIOR3	PIOR2	PIOR1	PIOR0

Bit	Function	80-pin		64-pin	
		Setting value		Setting value	
		0	1	0	1
PIOR4	INTP7	P02	P43	P02	P43
	INTP5	P55	P01	P01	–
PIOR3	PCLBUZ0	P02	P07	P02	P07
PIOR2	TxD1	P07	P42	P07	P42
	RxD1	P06	P43	P06	P43
	SCL10	P05	P44	P05	P44
	SDA10	P06	P43	P06	P43
	SI10	P06	P43	P06	P43
	SO10	P07	P42	P07	P42
	SCK10	P05	P44	P05	P44
PIOR1	TxD0	P00	P130	This area cannot be used. Be set to 0 (default value).	
	RxD0	P17	P47		
	SCL00	P16	P46		
	SDA00	P17	P47		
	SI00	P17	P47		
	SO00	P00	P130		
	SCK00	P16	P46		
PIOR0	TI00/TO00	P52	P40	P52	P40
	TI01/TO01	P32	P60	P32	P60
	TI02/TO02	P54	P61	P54	P61
	TI03/TO03/ REMOOUT	P30	P127	P30	P127
	TI04/TO04	P14	P126	P14	P126
	TI05/TO05	P42	P01	P42	P01
	TI06/TO06	P56	P125	P125	–
	TI07/TO07	P15	P41	P15	–

Remark –: These functions are not available for use.

4.3.9 LCD port function registers 0 to 6 (PFSEG0 to PFSEG6)

These registers set whether to use pins P00 to P07, P10 to P17, P22 to P27, P30 to P35, P46, P47, P50 to P57, P70 to P77, and P130 as port pins (other than segment output pins) or segment output, and whether to use P45 as a port pin or an analog input pin.

These registers can be set by a 1-bit or 8-bit memory manipulation instruction.

Reset signal generation sets these registers to FFH (PFSEG0 is set to F0H, and PFSEG6 is set to 0FH).

Remark The correspondence between the segment output pins (SEGxx) and the PFSEG register (PFSEGxx bits) and the existence of SEGxx pins in each product are shown in T**able 4-4 Segment Output Pins in Each Product and Correspondence with PFSEG Register (PFSEG Bits)**.

Figure 4-9. Format of **LCD Port Function Registers 0 to 6 (PFSEG0 to PFSEG6)**

Address: F0300H After reset: F0H R/W

Symbol	7	6	5	4	3	2	1	0
PFSEG0	PFSEG07	PFSEG06	PFSEG05	PFSEG04	0	0	0	0

Address: F0301H After reset: FFH R/W

Symbol	7	6	5	4	3	2	1	0
PFSEG1	PFSEG15	PFSEG14	PFSEG13	PFSEG12	PFSEG11	PFSEG10	PFSEG09	PFSEG08

Address: F0302H After reset: FFH R/W

Symbol	7	6	5	4	3	2	1	0
PFSEG2	PFSEG23	PFSEG22	PFSEG21	PFSEG20	PFSEG19	PFSEG18	PFSEG17	PFSEG16

Address: F0303H After reset: FFH R/W

Symbol	7	6	5	4	3	2	1	0
PFSEG3	PFSEG30	PFSEG29	PFSEG28	PFSEG27	PFSEG26	PFDEG	PFSEG25	PFSEG24

Address: F0304H After reset: FFH R/W

Symbol	7	6	5	4	3	2	1	0
PFSEG4	PFSEG38	PFSEG37	PFSEG36	PFSEG35	PFSEG34	PFSEG33	PFSEG32	PFSEG31

Address: F0305H After reset: FFH R/W

Symbol	7	6	5	4	3	2	1	0
PFSEG5	PFSEG46	PFSEG45	PFSEG44	PFSEG43	PFSEG42	PFSEG41	PFSEG40	PFSEG39

Address: F0306H After reset: 0FH R/W

Symbol	7	6	5	4	3	2	1	0
PFSEG6	0	0	0	0	PFSEG50	PFSEG49	PFSEG48	PFSEG47

PFSEGxx (xx = 04 to 50)	Port (other than segment output)/segment outputs specification of Pmn pins (mn = 00 to 07, 10 to 17, 22 to 27, 30 to 35, 46, 47, 50 to 57, 70 to 77, 130)
0	Used the Pmn pin as port (other than segment output)
1	Used the Pmn pin as segment output

PFDEG	Specification of port/analog input (IVREF0) for P45 pin
0	Used the Pmn pin as port
1	Used the Pmn pin as analog input (IVREF0)

Caution **Be sure to set bits that are not mounted to their initial values.**

Remark To use the Pmn pins as segment output pins (PFSEGxx = 1), be sure to set the PUmn bit of the PUm register, POMmn bit of the POMm register, and PIMmn bit of the PIMm register to “0”.

Table 4-4. Segment Output Pins in Each Product and Correspondence with PFSEG Register (PFSEG Bits)

Bit Name of PFSEG Register	Corresponding SEGxx Pins	Alternate Port	80-pin	64-pin
PFSEG04	SEG4	P50	√	–
PFSEG05	SEG5	P51	√	–
PFSEG06	SEG6	P52	√	√
PFSEG07	SEG7	P53	√	√
PFSEG08	SEG8	P54	√	√
PFSEG09	SEG9	P55	√	–
PFSEG10	SEG10	P56	√	–
PFSEG11	SEG11	P57	√	√
PFSEG12	SEG12	P70	√	√
PFSEG13	SEG13	P71	√	–
PFSEG14	SEG14	P72	√	–
PFSEG15	SEG15	P73	√	–
PFSEG16	SEG16	P74	√	√
PFSEG17	SEG17	P75	√	√
PFSEG18	SEG18	P76	√	√
PFSEG19	SEG19	P77	√	√
PFSEG20	SEG20	P30	√	√
PFSEG21	SEG21	P31	√	√
PFSEG22	SEG22	P32	√	√
PFSEG23	SEG23	P33	√	√
PFSEG24	SEG24	P34	√	–
PFSEG25	SEG25	P35	√	–
PFSEG26	SEG26	P46	√	–
PFSEG27	SEG27	P47	√	–
PFSEG28	SEG28	P130	√	–
PFSEG29	SEG29	P22	√	√
PFSEG30	SEG30	P23	√	–
PFSEG31	SEG31	P24	√	–
PFSEG32	SEG32	P25	√	–
PFSEG33	SEG33	P26	√	√
PFSEG34	SEG34	P27	√	√
PFSEG35	SEG35	P10	√	√
PFSEG36	SEG36	P11	√	√
PFSEG37	SEG37	P12	√	√
PFSEG38	SEG38	P13	√	√
PFSEG39	SEG39	P14	√	√
PFSEG40	SEG40	P15	√	√
PFSEG41	SEG41	P16	√	√
PFSEG42	SEG42	P17	√	√
PFSEG43	SEG43	P00	√	√
PFSEG44	SEG44	P01	√	√
PFSEG45	SEG45	P02	√	√
PFSEG46	SEG46	P03	√	√
PFSEG47	SEG47	P04	√	√
PFSEG48	SEG48	P05	√	√
PFSEG49	SEG49	P06	√	√
PFSEG50	SEG50	P07	√	√

4.3.10 LCD input switch control register (ISCLCD)

This register sets whether to use pins P125 to P127 as port pins (other than LCD function pins) or LCD function pins (V_{L3}, CAPL, CAPH).

The ISCLCD register can be set by a 1-bit or 8-bit memory manipulation instruction.

Reset signal generation sets this register to 00H.

Figure 4-10. Format of **LCD Input Switch Control Register (ISCLCD)**

Address: F0308H After reset: 00H R/W

Symbol	7	6	5	4	3	2	1	0
ISCLCD	0	0	0	0	0	0	ISCVL3	ISCCAP

ISCVL3	Control of Schmitt trigger buffer of V_{L3}/P125 pin
0	Makes digital input invalid (used as LCD function pin (V_{L3}))
1	Makes digital input valid

ISCCAP	Control of Schmitt trigger buffer of CAPL/P126 and CAPH/P127 pins
0	Makes digital input invalid (used as LCD function pins (CAPL,CAPH))
1	Makes digital input valid

Caution If ISCVL3 bit = 0 and ISCCAP bit = 0, set the corresponding port control registers as follows:

PU127 bit of PU12 register = 0, P127 bit of P12 register = 0

PU126 bit of PU12 register = 0, P126 bit of P12 register = 0

PU125 bit of PU12 register = 0, P125 bit of P12 register = 0

4.4 Port Function Operations

Port operations differ depending on whether the input or output mode is set, as shown below.

4.4.1 Writing to I/O port

(1) Output mode

A value is written to the output latch by a transfer instruction, and the output latch contents are output from the pin.
Once data is written to the output latch, it is retained until data is written to the output latch again.
The data of the output latch is cleared when a reset signal is generated.

(2) Input mode

A value is written to the output latch by a transfer instruction, but since the output buffer is off, the pin status does not change. Therefore, byte data can be written to the ports used for both input and output.
Once data is written to the output latch, it is retained until data is written to the output latch again.
The data of the output latch is cleared when a reset signal is generated.

4.4.2 Reading from I/O port

(1) Output mode

The output latch contents are read by a transfer instruction. The output latch contents do not change.

(2) Input mode

The pin status is read by a transfer instruction. The output latch contents do not change.

4.4.3 Operations on I/O port

(1) Output mode

An operation is performed on the output latch contents, and the result is written to the output latch. The output latch contents are output from the pins.
Once data is written to the output latch, it is retained until data is written to the output latch again.
The data of the output latch is cleared when a reset signal is generated.

(2) Input mode

The pin level is read and an operation is performed on its contents. The result of the operation is written to the output latch, but since the output buffer is off, the pin status does not change. Therefore, byte data can be written to the ports used for both input and output.
The data of the output latch is cleared when a reset signal is generated.

4.4.4 Handling different potential (1.8 V, 2.5 V, 3 V) by using I/O buffers

It is possible to connect an external device operating on a different potential (1.8 V, 2.5 V, or 3 V) by switching I/O buffers with the port input mode register (PIMxx) and port output mode register (POMxx).

When receiving input from an external device with a different potential (1.8 V, 2.5 V, or 3 V), set port input mode registers 0, 1, 3, 4, and 5 (PIM0, PIM1, PIM3, PIM4, and PIM5) on a bit-by-bit basis to enable normal input (CMOS)/TTL input buffer switching.

When outputting data to an external device with a different potential (1.8 V, 2.5 V, or 3 V), set port output mode registers 0, 1, 3, 4, 5, and 13 (POM0, POM1, POM3, POM4, POM5, and POM13) on a bit-by-bit basis to enable normal output (CMOS)/N-ch open drain (V_{DD} tolerance) switching.

Following, describes the connection of a serial interface.

(1) Setting procedure when using input pins of UART0 to UART3, CSI00, and CSI10 functions for the TTL input buffer

In case of UART0:	P17 (P47)
In case of UART1:	P06 (P43)
In case of UART2:	P03
In case of UART3:	P34
In case of CSI00:	P17, P16 (P47, P46)
In case of CSI10:	P06, P05 (P44, P43)

Remark Functions in parentheses can be assigned by setting the peripheral I/O redirection register (PIOR).

<1> Using an external resistor, pull up externally the pin to be used to the power supply of the target device (on-chip pull-up resistor cannot be used).

<2> Set the corresponding bit of the PIM0, PIM1, PIM3, and PIM4 registers to 1 to switch to the TTL input buffer. For V_{IH} and V_{IL}, refer to the DC characteristics when the TTL input buffer is selected.

<3> Enable the operation of the serial array unit and set the mode to the UART/Simplified SPI (CSI[Note]) mode.

<R> **Note** Although the CSI function is generally called SPI, it is also called CSI in this product, so it is referred to as such in this manual.

(2) Setting procedure when using output pins of UART0 to UART3, CSI00, and CSI10 functions in N-ch open-drain output mode

In case of UART0:	P00 (P130)
In case of UART1:	P07 (P42)
In case of UART2:	P04
In case of UART3:	P35
In case of CSI00:	P00, P16 (P130, P46)
In case of CSI10:	P07, P05 (P42, P44)

Remark Functions in parentheses can be assigned via settings in the peripheral I/O redirection register (PIOR).

<1> Using an external resistor, pull up externally the pin to be used to the power supply of the target device (on-chip pull-up resistor cannot be used).

<2> After reset release, the port mode changes to the input mode (Hi-Z).

<3> Set the output latch of the corresponding port to 1.

<4> Set the corresponding bit of the POM0, POM1, POM3, POM4, and POM13 registers to 1 to set the N-ch open drain output (V_{DD} tolerance) mode.

<5> Enable the operation of the serial array unit and set the mode to the UART/Simplified SPI (CSI) mode.

<6> Set the output mode by manipulating the PM0, PM1, PM3, PM4, and PM13 registers.
At this time, the output data is high level, so the pin is in the Hi-Z state.

(3) Setting procedure when using I/O pins of IIC00 and IIC10 functions with a different potential (1.8 V, 2.5 V, 3 V)

In case of IIC00: P16, P17 (P46, P47)
In case of IIC10: P05, P06 (P44, P43)

Remark Functions in parentheses can be assigned via settings in the peripheral I/O redirection register (PIOR).

<1> Using an external resistor, pull up externally the pin to be used to the power supply of the target device (on-chip pull-up resistor cannot be used).
<2> After reset release, the port mode is the input mode (Hi-Z).
<3> Set the output latch of the corresponding port to 1.
<4> Set the corresponding bit of the POM0, POM1, and POM4 registers to 1 to set the N-ch open drain output (V_{DD} tolerance) mode.
<5> Set the corresponding bit of the PIM0, PIM1, and PIM4 registers to 1 to switch the TTL input buffer. For V_{IH} and V_{IL}, refer to the DC characteristics when the TTL input buffer is selected.
<6> Enable the operation of the serial array unit and set the mode to the simplified I^2C mode.
<7> Set the corresponding bit of the PM0, PM1, and PM4 registers to the output mode (data I/O is possible in the output mode).
At this time, the output data is high level, so the pin is in the Hi-Z state.

4.5 Register Settings When Using Alternate Function

4.5.1 Basic concept when using alternate function

In the beginning, for a pin also assigned to be used for analog input, use the A/D port configuration register (ADPC) to specify whether to use the pin for analog input or digital input/output.

Also, for a pin also assigned to be used for analog input and segment output, use the LCD port function register (PFSEGx) and port mode control register (PMCxx) specify whether to use the pin for analog input, segment output, or digital input/output.

Figure 4-11 shows the basic configuration of an output circuit for pins used for digital input/output. The output of the output latch for the port and the output of the alternate SAU function are input to an AND gate. The output of the AND gate is input to an OR gate. The output of an alternate function other than SAU (TAU, RTC2, clock/buzzer output, IICA, etc.) is connected to the other input pin of the OR gate. When such kind of pins are used by the port function or an alternate function, the unused alternate function must not hinder the output of the function to be used. An idea of basic settings for this kind of case is shown in Table 4-5.

Figure 4-11. Basic Configuration of Output Circuit for Pins

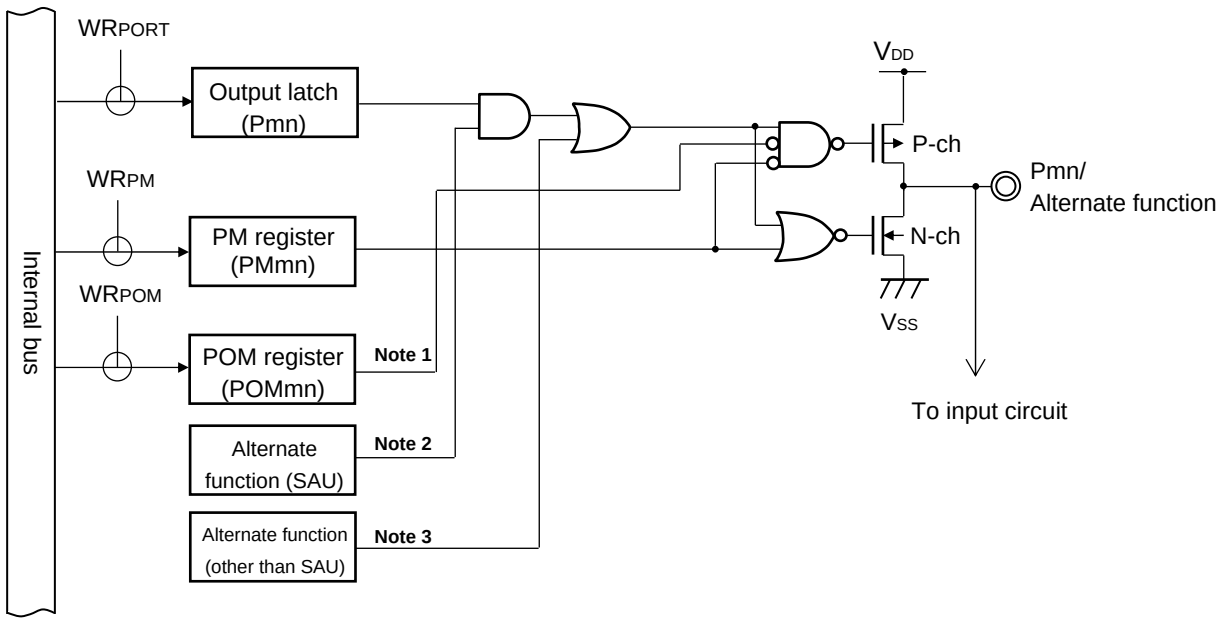

Notes 1. When there is no POM register, this signal should be considered to be low level (0).

2. When there is no alternate function, this signal should be considered to be high level (1).

3. When there is no alternate function, this signal should be considered to be low level (0).

Remark m: Port number (m = 0 to 7, 12, 13); n: Bit number (n = 0 to 7)

Table 4-5. Concept of Basic Settings

Output Function of Used Pin	Output Settings of Unused Alternate Function		
	Port Function	Output Function for SAU	Output Function for other than SAU
Output function for port	–	Output is high (1)	Output is low (0)
Output function for SAU	High (1)	–	Output is low (0)
Output function for other than SAU	Low (0)	Output is high (1)	Output is low (0)[Note]

Note Since more than one output function other than SAU may be assigned to a single pin, the output of an unused alternate function must be set to low level (0). For details on the setting method, see **4.5.2 Register settings for alternate function whose output function is not used**.

4.5.2 Register settings for alternate function whose output function is not used

When the output of an alternate function of the pin is not used, the following settings should be made. Note that when the peripheral I/O redirection function is the target, the output can be switched to another pin by setting the peripheral I/O redirection register (PIOR). This allows usage of the port function or other alternate function assigned to the target pin.

(1) SOp = 1, TxDq = 1 (settings when the serial output (SOp/TxDq) of SAU is not used)
When the serial output (SOp/TxDq) is not used, such as, a case in which only the serial input of SAU is used, set the bit in serial output enable register m (SOEm) which corresponds to the unused output to 0 (output disabled) and set the SOmn bit in serial output register m (SOm) to 1 (high). These are the same settings as the initial state.

(2) SCKp = 1, SDAr = 1, SCLr = 1 (settings when channel n in SAU is not used)
When SAU is not used, set bit n (SEmn) in serial channel enable status register m (SEm) to 0 (operation stopped state), set the bit in serial output enable register m (SOEm) which corresponds to the unused output to 0 (output disabled), and set the SOmn and CKOmn bits in serial output register m (SOm) to 1 (high). These are the same settings as the initial state.

(3) TOmn = 0 (settings when the output of channel n in TAU is not used)
When the TOmn output of TAU is not used, set the bit in timer output enable register 0 (TOE0) which corresponds to the unused output to 0 (output disabled) and set the bit in timer output register 0 (TO0) to 0 (low). These are the same settings as the initial state.

(4) SDAAn = 0, SCLAn = 0 (setting when IICA is not used)
When IICA is not used, set the IICEn bit in IICA control register n0 (IICCTLn0) to 0 (operation stopped). This is the same setting as the initial state.

(5) PCLBUZn = 0 (setting when clock/buzzer output is not used)
When the clock/buzzer output is not used, set the PCLOEn bit in clock output select register n (CKSn) to 0 (output disabled). This is the same setting as the initial state.

(6) REMOOUT = 0 (setting when remote control output is not used)
When the REMOOUT output of TAU is not used, set the bit in timer output enable register 0 (TOE0) of channels 2, 3, 4, and 5 to 0 (output disabled), and set the bit in timer output register 0 (TO0) to 0 (Low). This is the same setting as the initial state.

<R> **Remark** p: CSI number (p = 00, 10), q: UART number (q = 0 to 3), r: IIC number (r = 00, 10)

(7) VCOUTn = 0 (setting when VCOUTn is not used)
When VCOUTn of comparator is not used, set the bits 5 and 1 in the comparator output control register (COMPOCR) to 0 (VCOUTn pin of comparator n output disabled). This is the same setting as the initial state.

(8) TKBO00 = 0/TKBO01-0, 1, 2 = 0 (setting when 16-bit timer KB20 is not used)
When 16-bit timer KB2 is not used, set the bit 7 in 16-bit timer KB20 operation control register 01 (TKBCTL01) to 0 (timer operation stopped), set the bits 1 and 0 in 16-bit timer KB2 output control register 01 (TKBIOC01) to 0 (timer output disabled), set the bits 1 and 0 in 16-bit timer KB2 output control register 00 (TKBIOC00) to 0 (default level is low level), and set the bits 0 and 1 in forced output stop function control register 2 (TKBPACTL02) to 0(forced output stop function operation disabled). This is the same setting as the initial state.

4.5.3 Register setting examples for used port and alternate functions

Register setting examples for used port and alternate functions are shown in Table 4-6. The registers used to control the port functions should be set as shown in Table 4-6. See the following remark for legends used in Table 4-6.

Remark –: Not supported
×: don't care
PIORx: Peripheral I/O redirection register
POMxx: Port output mode register
PMCxx: Port mode control register
PMxx: Port mode register
Pxx: Port output latch
PFSEG××, PFDEG: LCD port function register
Functions in parentheses can be assigned via settings in the peripheral I/O redirection register (PIOR).

Table 4-6. Setting Examples of Registers and Output Latches When Using Alternate Function (1/15)

Pin Name	Used Function		PIOR×	POM××	PMC××	PM××	P××	PFSEGxx (PFDEG, ISCVL3, ISCCAP)[Note 1]	Alternate Function Output		80-pin	64-pin
	Function Name	I/O							SAU Output Function	Other than SAU		
P00	P00	Input	–	×	–	1	×	0	–	–	√	√
		Output	×	0		0	0/1		SO00/TxD0 = 1			
		N-ch open drain output		1								
	SO00	Output	PIOR1 = 0[Note 2]	0/1		0	1		–			
	TxD0	Output	PIOR1 = 0[Note 2]	0/1		0	1		–			
	SEG43	Output	×	0		0	0	1	–			
P01	P01	Input	–	–	–	1	×	0	–	–	√	√
		Output	×			0	0/1			TO05 = 0 PCLBUZ1 = 0		
	INTP5[Note 3]	Input	PIOR4 = 0			1	×			–	×	√
	(INTP5)[Note 2]	Input	PIOR4 = 1			1	×			–	√	×
	(TI05)	Input	PIOR0 = 1			1	×			–	√	√
	(TO05)	Output				0	0			PCLBUZ1 = 0	√	√
	PCLBUZ1	Output	×			0	0			TO05 = 0	√	√
	SEG44	Output	×			0	0	1		–	√	√
P02	P02	Input	–	–	–	1	×	0	–	–	√	√
		Output	×			0	0/1			PCLBUZ0 = 0		
	INTP7	Input	PIOR4 = 0			1	×			–		
	PCLBUZ0	Output	PIOR3 = 0			0	0			–		
	SEG45	Output	×			0	0	1		–		
P03	P03	Input	–	–	–	1	×	0	–	–	√	√
		Output				0	0/1			VCOUT0 = 0		
	RxD2	Input				1	×			–		
	VCOUT0	Output				0	0			–		
	SEG46	Output				0	0	1		–		

Notes 1. PFDEG, ISCVL3, and ISCCAP are registers that correspond to P45, P125, and P126 and P127, respectively.

2. 80-pin products only

3. 64-pin products only

Table 4-6. Setting Examples of Registers and Output Latches When Using Alternate Function (2/15)

Pin Name	Used Function		PIOR×	POM××	PMC××	PM××	P××	PFSEGxx (PFDEG, ISCVL3, ISCCAP)Note	Alternate Function Output		80-pin	64-pin
	Function Name	I/O							SAU Output Function	Other than SAU		
P04	P04	Input	–	×	–	1	×	0	–	–	√	√
		Output		0		0	0/1		TxD2 = 1	VCOUT1 = 0		
		N-ch open drain output		1								
	TxD2	Output		0/1		0	1		–	VCOUT1 = 0		
	VCOUT1	Output		0		0	0		TxD2 = 1	–		
	SEG47	Output		0		0	0	1	–	–		
P05	P05	Input	–	×	–	1	×	0	–	–	√	√
		Output	×	0		0	0/1		SCK10/SCL10 = 1			
		N-ch open drain output		1								
	SCK10	Input	PIOR2 = 0	×		1	×		–			
		Output		0/1		0	1		–			
	SCL10	Output	PIOR2 = 0	0/1		0	1		–			
	SEG48	Output	×	0		0	0	1	–			
P06	P06	Input	–	×	–	1	×	0	–	–	√	√
		Output	×	0		0	0/1		SDA10 = 1			
		N-ch open drain output		1								
	SI10	Input	PIOR2 = 0	×		1	×		–			
	RxD1	Input	PIOR2 = 0	×		1	×		–			
	SDA10	I/O	PIOR2 = 0	1		0	1		–			
	SEG49	Output	×	0		0	0	1	–			
P07	P07	Input	–	×	–	1	×	0	–	–	√	√
		Output	×	0		0	0/1		SO10/TxD1 = 1	(PCLBUZ0 = 0)		
		N-ch open drain output		1								
	SO10	Output	PIOR2 = 0	0/1		0	1		–	(PCLBUZ0 = 0)		
	TxD1	Output	PIOR2 = 0	0/1		0	1		–	(PCLBUZ0 = 0)		
	(PCLBUZ0)	Output	PIOR3 = 1	0		0	0		SO10/TxD1 = 1	–		
	SEG50	Output	×	0		0	0	1	–	–		

Note PFDEG, ISCVL3, and ISCCAP are registers that correspond to P45, P125, and P126 and P127, respectively.

Table 4-6. Setting Examples of Registers and Output Latches When Using Alternate Function (3/15)

Pin Name	Used Function		PIOR×	POM××	PMC××	PM××	P××	PFSEGxx (PFDEG, ISCVL3, ISCCAP)Note	Alternate Function Output		80-pin	64-pin
	Function Name	I/O							SAU Output Function	Other than SAU		
P10	P10	Input	–	–	0	1	×	0	–	–	√	√
		Output			0	0	0/1					
	ANI22	Analog input			1	1	×	1				
	SEG35	Output			0	0	0					
P11	P11	Input	–	–	0	1	×	0	–	–	√	√
		Output			0	0	0/1					
	ANI23	Analog input			1	1	×	1				
	SEG36	Output			0	0	0					
P12	P12	Input	–	–	0	1	×	0	–	–	√	√
		Output			0	0	0/1					
	ANI24	Analog input			1	1	×	1				
	SEG37	Output			0	0	0					
P13	P13	Input	–	–	0	1	×	0	–	–	√	√
		Output			0	0	0/1					
	ANI25	Analog input			1	1	×	1				
	SEG38	Output			0	0	0					
P14	P14	Input	–	–	–	1	×	0	–	–	√	√
		Output	×			0	0/1			TO04 = 0		
	TI04	Input	PIOR0 = 0			1	×			–		
	TO04	Output	PIOR0 = 0			0	0			–		
	SEG39	Output	×			0	0	1		–		
P15	P15	Input	–	–	–	1	×	0	–	–	√	√
		Output	×			0	0/1			TO07 = 0		
	TI07	Input	PIOR0 = 0			1	×			–		
	TO07	Output	PIOR0 = 0			0	0			–		
	SEG40	Output	×			0	0	1		–		

Note PFDEG, ISCVL3, and ISCCAP are registers that correspond to P45, P125, and P126 and P127, respectively.

Table 4-6. Setting Examples of Registers and Output Latches When Using Alternate Function (4/15)

Pin Name	Used Function		PIOR×	POM××	PMC××	PM××	P××	PFSEGxx	Alternate Function Output		80-pin	64-pin
	Function Name	I/O						(PFDEG, ISCVL3, ISCCAP)[Note 1]	SAU Output Function	Other than SAU		
P16	P16	Input	–	×	–	1	×	0	–	–	√	√
		Output	×	0		0	0/1		SCK00/SCL00 = 1			
		N-ch open drain output		1								
	SCK00	Input	PIOR1 = 0[Note 2]	×		1	×		–			
		Output		0/1		0	1		–			
	SCL00	Output	PIOR1 = 0[Note 2]	0/1		0	1		–			
	SEG41	Output	×	0		0	0	1	–			
P17	P16	Input	–	×	–	1	×	0	–	–	√	√
		Output	×	0		0	0/1		SDA00 = 1			
		N-ch open drain output		1								
	SI00	Input	PIOR1 = 0[Note 2]	×		1	×		–			
	RxD0	Input	PIOR1 = 0[Note 2]	×		1	×		–			
	SDA00	I/O	PIOR1 = 0[Note 2]	1		0	1		–			
	SEG42	Output	×	0		0	0	1	–			

Notes 1. PFDEG, ISCVL3, and ISCCAP are registers that correspond to P45, P125, and P126 and P127, respectively.

2. 80-pin products only

Table 4-6. Setting Examples of Registers and Output Latches When Using Alternate Function (5/15)

Pin Name	Used Function		ADPC	ADM2	PMxx	Pxx	80-pin	64-pin
	Function Name	I/O						
P20	P20	Input	01H/02H	×	1	×	√	√
		Output		×	0	0/1		
	ANI1	Analog input	00H	xx00xx0xB	1	×		
	AV_{REFM}	Reference voltage input	00H	xx10xx0xB	1	×		
P21	P21	Input	01H	×	1	×	√	√
		Output		×	0	0/1		
	ANI0	Analog input	00H/02H	00x0xx0xB 10x0xx0xB	1	×		
	AV_{REFP}	Reference voltage input	00H/02H	01x0xx0xB	1	×		

Table 4-6. Setting Examples of Registers and Output Latches When Using Alternate Function (6/15)

Pin Name	Used Function		PIOR×	POM××	PMC××	PM××	P××	PFSEGxx (PFDEG, ISCVL3, ISCCAP)[Note]	Alternate Function Output		80-pin	64-pin
	Function Name	I/O							SAU Output Function	Other than SAU		
P22	P22	Input	–	–	0	1	×	0	–	–	√	√
		Output			0	0	0/1					
	ANI16	Analog input			1	1	×	1				
	SEG29	Output			0	0	0					
P23	P23	Input	–	–	0	1	×	0	–	–	√	×
		Output			0	0	0/1					
	ANI17	Analog input			1	1	×	1				
	SEG30	Output			0	0	0					
P24	P24	Input	–	–	0	1	×	0	–	–	√	×
		Output			0	0	0/1					
	ANI18	Analog input			1	1	×	1				
	SEG31	Output			0	0	0					
P25	P25	Input	–	–	0	1	×	0	–	–	√	×
		Output			0	0	0/1					
	ANI19	Analog input			1	1	×	1				
	SEG32	Output			0	0	0					
P26	P26	Input	–	–	0	1	×	0	–	–	√	√
		Output			0	0	0/1					
	ANI20	Analog input			1	1	×	1				
	SEG33	Output			0	0	0					
P27	P27	Input	–	–	0	1	×	0	–	–	√	√
		Output			0	0	0/1					
	ANI21	Analog input			1	1	×	1				
	SEG34	Output			0	0	0					

Note PFDEG, ISCVL3, and ISCCAP are registers that correspond to P45, P125, and P126 and P127, respectively.

Table 4-6. Setting Examples of Registers and Output Latches When Using Alternate Function (7/15)

Pin Name	Used Function		PIOR×	POM××	PMC××	PM××	P××	PFSEGxx (PFDEG, ISCVL3, ISCCAP)[Note]	Alternate Function Output		80-pin	64-pin
	Function Name	I/O							SAU Output Function	Other than SAU		
P30	P30	Input	–	–	–	1	×	0	–	–	√	√
		Output	×			0	0/1			TO03/REMOOUT = 0		
	TI03	Input	PIOR0 = 0			1	×			–		
	TO03	Output	PIOR0 = 0			0	0			–		
	REMOOUT	Output	PIOR0 = 0			0	0			–		
	SEG20	Output	×			0	0	1		–		
P31	P31	Input	–	–	–	1	×	0	–	–	√	√
		Output				0	0/1			RTC1HZ = 0		
	INTP3	Input				1	×			–		
	RTC1HZ	Output				0	0			–		
	SEG21	Output				0	0	1		–		
P32	P32	Input	–	–	–	1	×	0	–	–		
		Output	×			0	0/1			TO01 = 0		
	TI01	Input	PIOR0 = 0			1	×			–		
	TO01	Output	PIOR0 = 0			0	0			–		
	SEG22	Output	×			0	0	1		–		
P33	P33	Input	–	–	–	1	×	0	–	–	√	√
		Output				0	0/1					
	INTP4	Input				1	×					
	SEG23	Output				0	0	1				
P34	P34	Input	–	–	–	1	×	0	–	–	√	×
		Output				0	0/1					
	RxD3	Input				1	×					
	SEG24	Output				0	0	1				
P35	P35	Input	–	×	–	1	×	0	–	–	√	×
		Output		0		0	0/1		TxD3 = 1			
		N-ch open drain output		1								
	TxD3	Output		0/1		0	1		–			
	SEG25	Output		0		0	×	1	–			
P40	P40	Input	–	–	–	1	×	–	–	–	√	√
		Output	×			0	0/1			(TO00) = 0		
	(TI00)	Input	PIOR0 = 1			1	×			–		
	(TO00)	Output	PIOR0 = 1			0	0			–		

Note PFDEG, ISCVL3, and ISCCAP are registers that correspond to P45, P125, and P126 and P127, respectively.

Table 4-6. Setting Examples of Registers and Output Latches When Using Alternate Function (8/15)

Pin Name	Used Function		PIOR×	POM××	PMC××	PM××	P××	PFSEGxx (PFDEG, ISCVL3, ISCCAP)[Note]	Alternate Function Output		80-pin	64-pin
	Function Name	I/O							SAU Output Function	Other than SAU		
P41	P41	Input	–	–	–	1	×	–	–	–	√	×
		Output	×			0	0/1			(TO07) = 0		
	(TI07)	Input	PIOR0 = 1			1	×			–		
	(TO07)	Output	PIOR0 = 1			0	0			–		
P42	P42	Input	–	×	0	1	×	–	–	–	√	√
		Output	×	0		0	0/1		(SO10/TxD1) = 1	TO05 = 0		
		N-ch open drain output		1								
	IVREF1	Analog input	–	×	1	1	×		–	–		
	(SO10)	Output	PIOR2 = 1	0/1	0	0	1		–	TO05 = 0		
	(TxD1)	Output	PIOR2 = 1	0/1	0	0	1		–	TO05 = 0		
	TI05	Input	PIOR0 = 0	×	0	1	×		–	–		
	TO05	Output	PIOR0 = 0	0	0	0	0		(SO10/TxD1) = 1	–		
P43	P43	Input	–	×	0	1	×	–	–	–	√	√
		Output	×	0		0	0/1		(SDA10) = 1			
		N-ch open drain output		1								
	IVCMP1	Analog input	–	×	1	1	×		–			
	(INTP7)	Input	PIOR4 = 1	×	0	1	×		–			
	(SI10)	Input	PIOR2 = 1	×	0	1	×		–			
	(RxD1)	Input	PIOR2 = 1	×	0	1	×		–			
	(SDA10)	I/O	PIOR2 = 1	1	0	0	1		–			
P44	P44	Input	–	×	0	1	×	–	–	–	√	√
		Output	×	0		0	0/1		(SCK10/SCL10) = 1			
		N-ch open drain output		1								
	IVCMP0	Analog input	–	×	1	1	×		–			
	(SCK10)	Input	PIOR2 = 1	×	0	1	×		–			
		Output		0/1		0	1		–			
	(SCL10)	Output	PIOR2 = 1	0/1	0	0	1		–			

Note PFDEG, ISCVL3, and ISCCAP are registers that correspond to P45, P125, and P126 and P127, respectively.

Table 4-6. Setting Examples of Registers and Output Latches When Using Alternate Function (9/15)

Pin Name	Used Function		PIOR×	POM××	PMC××	PM××	P××	PFSEGxx (PFDEG, ISCVL3, ISCCAP)[Note 1]	Alternate Function Output		80-pin	64-pin
	Function Name	I/O							SAU Output Function	Other than SAU		
P45	P41	Input	–	–	0	1	×	0	–	–	√	√
		Output				0	0/1					
	IVREF0	Analog input			1	1	×	1				
P46	P46	Input	–	×	–	1	×	0	–	–	√	×
		Output	×	0		0	0/1		(SCK00/SCL00) = 1			
		N-ch open drain output		1								
	(SCK00)	Input	PIOR1 = 1[Note 2]	×		1	×		–			
		Output		0/1		0	1		–			
	(SCL00)	Output	PIOR1 = 1[Note 2]	0/1		0	1		–			
	SEG26	Output	×	0		0	0	1	–			
P47	P47	Input	–	×	–	1	×	0	–	–	√	×
		Output	×	0		0	0/1		(SDA00) = 1			
		N-ch open drain output		1								
	(SI00)	Input	PIOR1 = 1[Note 2]	×		1	×		–			
	(RxD0)	Input	PIOR1 = 1[Note 2]	×		1	×		–			
	(SDA00)	I/O	PIOR1 = 1[Note 2]	1		0	1		–			
	SEG27	Output	×	0		0	0	1	–			
P50	P50	Input	–	–	–	1	×	0	–	–	√	×
		Output				0	0/1					
	SEG4	Output				0	0	1				
P51	P51	Input	–	–	–	1	×	0	–	–	√	×
		Output				1	0/1					
	SEG5	Output				0	0	1				
P52	P52	Input	–	–	–	1	×	0	–	–	√	√
		Output	×			0	0/1			TO00 = 0		
	INTP1	Input	–			1	×			–		
	TI00	Input	PIOR0 = 0			1	×			–		
	TO00	Output	PIOR0 = 0			0	0			–		
	SEG6	Output	×			0	0	1		–		

Notes 1. PFDEG, ISCVL3, and ISCCAP are registers that correspond to P45, P125, and P126 and P127, respectively.

2. 80-pin products only

Table 4-6. Setting Examples of Registers and Output Latches When Using Alternate Function (10/15)

Pin Name	Used Function		PIOR×	POM××	PMC××	PM××	P××	PFSEGxx (PFDEG, ISCVL3, ISCCAP)Note	Alternate Function Output		80-pin	64-pin
	Function Name	I/O							SAU Output Function	Other than SAU		
P53	P53	Input	–	×	–	1	×	0	–	–	√	√
		Output		0		0	0/1					
		N-ch open drain output		1								
	INTP2	Input		×		1	×					
	SEG7	Output		0		0	0	1				
P54	P54	Input	–	×	–	1	×	0	–	–	√	√
		Output	×	0		0	0/1			TO02 = 0		
		N-ch open drain output		1								
	TI02	Input	PIOR0 = 0	×		1	×			–		
	TO02	Output	PIOR0 = 0	0		0	0			–		
	SEG8	Output	×	0		0	0	1		–		
P55	P55	Input	–	×	–	1	×	0	–	–	√	×
		Output	–	0		0	0/1					
		N-ch open drain output		1								
	INTP5	Input	PIOR4 = 0	×		1	×					
	SEG9	Output	×	0		0	0	1				
P56	P56	Input	–	×	–	1	×	0	–	–	√	×
		Output	×	0		0	0/1			TO06 = 0		
		N-ch open drain output		1								
	TI06	Input	PIOR0 = 0	×		1	×			–		
	TO06	Output	PIOR0 = 0	0		0	0			–		
	SEG10	Output	×	0		0	0	1		–		
P57	P57	Input	–	–	–	1	×	0	–	–	√	√
		Output				1	0/1					
	INTP6	Input				1	×					
	SEG11	Output				0	0	1				

Note PFDEG, ISCVL3, and ISCCAP are registers that correspond to P45, P125, and P126 and P127, respectively.

Table 4-6. Setting Examples of Registers and Output Latches When Using Alternate Function (11/15)

Pin Name	Used Function		PIOR×	POM××	PMC××	PM××	P××	PFSEGxx (PFDEG, ISCVL3, ISCCAP)Note	Alternate Function Output		80-pin	64-pin
	Function Name	I/O							SAU Output Function	Other than SAU		
P60	P60	Input	–	–	–	1	×	–	–	–	√	√
		N-ch open drain output (6-V tolerance)	×			0	0/1			SCLA0 = 0 (TO01) = 0		
	SCLA0	I/O	×			0	0			(TO01) = 0		
	(TI01)	Input	PIOR0 = 1			1	×			–		
	(TO01)	Output	PIOR0 = 1			0	0			SCLA0 = 0		
P61	P61	Input	–	–	–	1	×	–	–	–	√	√
		N-ch open drain output (6-V tolerance)	×			0	0/1			SDAA0 = 0 (TO02) = 0		
	SDAA0	I/O	×			0	0			(TO02) = 0		
	(TI02)	Input	PIOR0 = 1			1	×			–		
	(TO02)	Output	PIOR0 = 1			0	0			SDAA0 = 0		
P70	P70	Input	–	–	–	1	×	0	–	–	√	√
		Output				0	0/1					
	KR0	Input				1	×					
	SEG12	Output				0	0	1				
P71	P71	Input	–	–	–	1	×	0	–	–	√	×
		Output				0	0/1					
	KR1	Input				1	×					
	SEG13	Output				0	0	1				
P72	P72	Input	–	–	–	1	×	0	–	–	√	×
		Output				0	0/1					
	KR2	Input				1	×					
	SEG14	Output				0	0	1				
P73	P73	Input	–	–	–	1	×	0	–	–	√	×
		Output				0	0/1					
	KR3	Input				1	×					
	SEG15	Output				0	0	1				

Note PFDEG, ISCVL3, and ISCCAP are registers that correspond to P45, P125, and P126 and P127, respectively.

Table 4-6. Setting Examples of Registers and Output Latches When Using Alternate Function (12/15)

Pin Name	Used Function		PIOR×	POM××	PMC××	PM××	P××	PFSEGxx (PFDEG, ISCVL3, ISCCAP)Note	Alternate Function Output		80-pin	64-pin
	Function Name	I/O							SAU Output Function	Other than SAU		
P74	P74	Input	–	–	–	1	×	0	–	–	√	√
		Output				0	0/1			TKBO00 = 0		
	KR4	Input				1	×			–		
	TKBO00	Output				0	0			–		
	SEG16	Output				0	0	1		–		
P75	P75	Input	–	–	–	1	×	0	–	–	√	√
		Output				0	0/1			TKBO01-2 = 0		
	KR5	Input				1	×			–		
	TKBO01-2	Output				0	0			–		
	SEG17	Output				0	0	1		–		
P76	P76	Input	–	–	–	1	×	0	–	–	√	√
		Output				0	0/1			TKBO01-1 = 0		
	KR6	Input				1	×			–		
	TKBO01-1	Output				0	0			–		
	SEG18	Output				0	0	1		–		
P77	P77	Input	–	–	–	1	×	0	–	–	√	√
		Output				0	0/1			TKBO01-0 = 0		
	KR7	Input				1	×			–		
	TKBO01-0	Output				0	0			–		
	SEG19	Output				0	0	1		–		

Note PFDEG, ISCVL3, and ISCCAP are registers that correspond to P45, P125, and P126 and P127, respectively.

Table 4-6. Setting Examples of Registers and Output Latches When Using Alternate Function (13/15)

Pin Name	Used Function		CMC (EXCLK, OSCSEL, EXCLKS, OSCSELS)	Pxx	80-pin	64-pin
	Function Name	I/O				
P121	P121	Input	00xx/10xx/11xx	×	√	√
	X1	–	01xx	–		
P122	P122	Input	00xx/10xx/11xx	×	√	√
	X2	–	01xx	–		
	EXCLK	Input	11xx	–		
P123	P123	Input	xx00/xx10/xx11	×	√	√
	XT1	–	xx01	–		
P124	P124	Input	xx00/xx10/xx11	×	√	√
	XT2	–	xx01	–		
	EXCLKS	Input	xx11	–		

Table 4-6. Setting Examples of Registers and Output Latches When Using Alternate Function (14/15)

Pin Name	Used Function		PIOR×	POM××	PMC××	PM××	P××	PFSEGxx	Alternate Function Output		80-pin	64-pin
	Function Name	I/O						(PFDEG, ISCVL3, ISCCAP)[Note 1]	SAU Output Function	Other than SAU		
P125	P125	Input	–	–	–	1	×	1	–	–	√	√
		Output	×			0	0/1			(TO06) = 0		
	TI06[Note 3]	Input	PIOR0 = 0			1	×			–		
	TO06[Note 3]	Output	PIOR0 = 0			0	0			–		
	(TI06)[Note 2]	Input	PIOR0 = 1			1	×			–		
	(TO06)[Note 2]	Output	PIOR0 = 1			0	0			–		
	V_{L3}	–	×			1	×	0		–		
P126	P126	Input	–	–	–	1	×	1	–	–	√	√
		Output	×			0	0/1			(TO04) = 0		
	(TI04)	Input	PIOR0 = 1			1	×			–		
	(TO04)	Output	PIOR0 = 1			0	0			–		
	CAPL	–	×			1	×	0		–		

Notes 1. PFDEG, ISCVL3, and ISCCAP are registers that correspond to P45, P125, and P126 and P127, respectively.

2. 80-pin products only

3. 64-pin products only

Table 4-6. Setting Examples of Registers and Output Latches When Using Alternate Function (15/15)

Pin Name	Used Function		PIOR×	POM××	PMC××	PM××	P××	PFSEGxx	Alternate Function Output		80-pin	64-pin
	Function Name	I/O						(PFDEG, ISCVL3, ISCCAP)[Note 1]	SAU Output Function	Other than SAU		
P127	P127	Input	–	–	–	1	×	1	–	–	√	√
		Output	×			0	0/1			(TO03/REMOOUT) = 0		
	(TI03)	Input	PIOR0 = 1			1	×			–		
	(TO03)	Output	PIOR0 = 1			0	0			–		
	(REMOOUT)	Output	PIOR0 = 1									
	CAPH	–	×			1	×	0		–		
P130	P30	Input	–	×	–	1	×	0	–	–	√	×
		Output	×	0		0	0/1		(SO00/TxD0) = 1			
		N-ch open drain output		1								
	(SO00)	Output	PIOR1 = 1[Note 2]	0/1		0	1		–			
	(TxD0)	Output	PIOR1 = 1[Note 2]	0/1		0	1		–			
	SEG28	Output	×	0		0	0	1	–			
P137	P137	Input	–	–	–	–	×	–	–	–	√	√
	INTP0	Input										

Notes 1. PFDEG, ISCVL3, and ISCCAP are registers that correspond to P45, P125, and P126 and P127, respectively.

2. 80-pin products only

4.5.4 Operation of ports that alternately function as SEGxx pins

The functions of ports that also serve as segment output pins (SEGxx) can be selected by using the port mode control register (PMCxx), port mode register (PMxx), and LCD port function registers 0 to 6 (PFSEG0 to PFSEG6).

(1) P00 to P07, P14 to P17, P30 to P35, P46, P47, P50 to P57, P70 to P77, P130 (ports that do not serve as analog input pins (ANIxx, IVREF0))

Table 4-7. Settings of SEGxx/Port Pin Function

PFSEGxx Bit of PFSEG0 to PFSEG6 Registers	PMxx Bit of PMxx Register	Pin Function	Initial Status
1	1	Digital input invalid mode	√
0	0	Digital output mode	–
0	1	Digital input mode	–
1	0	Segment output mode	–

The following shows the SEGxx/port pin function status transitions.

Figure 4-12. SEGxx/Port Pin Function Status Transition Diagram

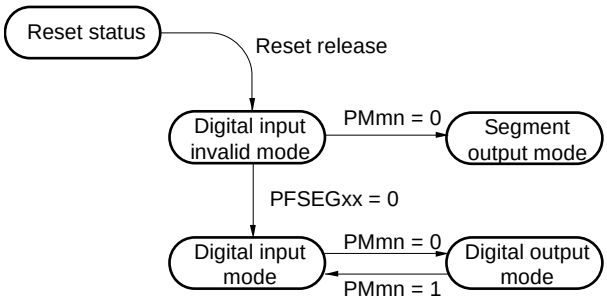

Caution Be sure to set the segment output mode before segment output starts (while SCOC of LCD mode register 1 (LCDM1) is 0).

(2) P10 to P13, P22 to P27 (ports that serve as analog input pins (ANIxx))

Table 4-8. Settings of ANIxx/SEGxx/Port Pin Function

PMCxx Bit of PMCxx Register	PFSEGxx Bit of PFSEG3, PFSEG4 Registers	PMxx Bit of PMxx Register	Pin Function	Initial Status
1	1	1	Analog input mode	√
0	0	0	Digital output mode	–
0	0	1	Digital input mode	–
0	1	0	Segment output mode	–
0	1	1	Digital input invalid mode	–
Other than above			Setting prohibited	

The following shows the ANIxx/SEGxx/port pin function status transitions.

Figure 4-13. ANIxx/SEGxx/Port Pin Function Status Transition Diagram

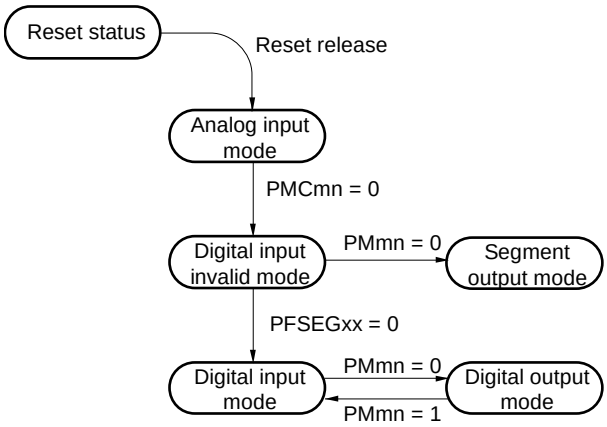

Caution Be sure to set the segment output mode before segment output starts (while SCOC of LCD mode register 1 (LCDM1) is 0).

4.5.5 Operation of ports that alternately function as V_{L3}, CAPL, and CAPH pins

The functions of the V_{L3}/P125, CAPL/P126, and CAPH/P127 pins can be selected by using the LCD input switch control register (ISCLCD), LCD mode register 0 (LCDM0), and port mode register 12 (PM12).

(1) V_{L3}/P125

Table 4-9. Settings of V_{L3}/P125 Pin Function

Bias Setting (LBAS1 and LBAS0 Bits of LCDM0 Register)	ISCVL3 Bit of ISCLCD Register	PM125 Bit of PM12 Register	Pin Function	Initial Status
Other than 1/4 bias method (LBAS1, LBAS0 = 00 or 01)	0	1	Digital input invalid mode	√
	1	0	Digital output mode	–
	1	1	Digital input mode	–
1/4 bias method (LBAS1, LBAS0 = 10)	0	1	V_{L3} function mode	–
Other than above			Setting prohibited	

The following shows the V_{L3}/P125 pin function status transitions.

Figure 4-14. V_{L3}/P125 Pin Function Status Transition Diagram

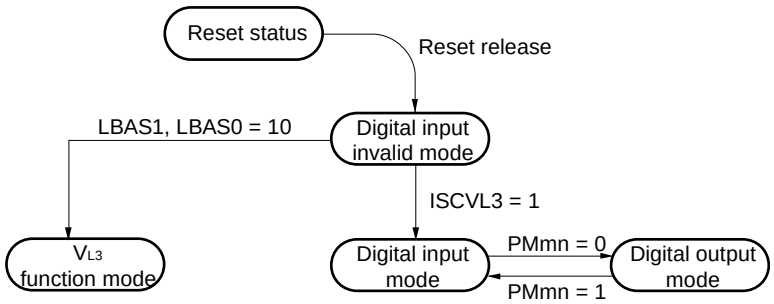

Caution Be sure to set the V_{L3} function mode before segment output starts (while SCOC of LCD mode register 1 (LCDM1) is 0).

(2) CAPL/P126, CAPH/P127

Table 4-10. Settings of CAPL/P126, CAPH/P127 Pin Function

LCD Drive Voltage Generator (MDSET1 and MDSET0 Bits of LCDM0 Register)	ISCCAP Bit of ISCLCD Register	PM126, PM127 Bits of PM12 Register	Pin Function	Initial Status
External resistance division (MDSET1, MDSET0 = 00)	0	1	Digital input invalid mode	√
	1	0	Digital output mode	–
	1	1	Digital input mode	–
Internal voltage boosting or capacitor split (MDSET1, MDSET0 = 01 or 10)	0	1	CAPL/CAPH function mode	–
Other than above			Setting prohibited	

The following shows the CAPL/P126 and CAPH/P127 pin function status transitions.

Figure 4-15. CAPL/P126 and CAPH/P127 Pin Function Status Transition Diagram

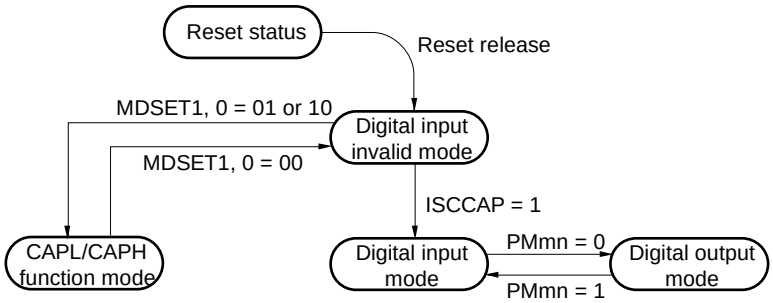

Caution Be sure to set the CAPL/CAPH function mode before segment output starts (while SCOC of LCD mode register 1 (LCDM1) is 0).

4.5.6 P45 (port that serves as an analog input pin (IVREF0))

Table 4-11. Settings of IVREF0/Port Pin Function

PMC45 Bit of PMC4 Register	PFDEG Bit of PFSEG3 Register	PM45 Bit of PM4 Register	Pin Function	Initial Status
1	1	1	Analog input mode	–
0	0	0	Digital output mode	–
0	0	1	Digital input mode	–
0	1	1	Digital input invalid mode	√
Other than above			Setting prohibited	

The following shows the IVREF0/port pin function status transitions.

Figure 4-16. IVREF0/Port Pin Function Status Transition Diagram

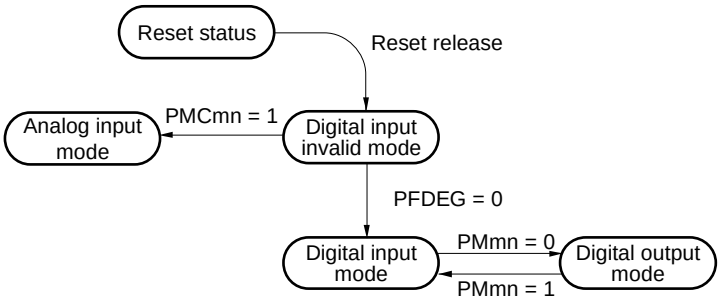

4.6 Cautions When Using Port Function

4.6.1 Cautions on 1-bit manipulation instruction for port register n (Pn)

When a 1-bit manipulation instruction is executed on a port that provides both input and output functions, the output latch value of an input port that is not subject to manipulation may be written in addition to the targeted bit.

Therefore, it is recommended to rewrite the output latch when switching a port from input mode to output mode.

<Example> When P10 is an output port, P11 to P17 are input ports (all pin statuses are high level), and the port latch value of port 1 is 00H, if the output of output port P10 is changed from low level to high level via a 1-bit manipulation instruction, the output latch value of port 1 is FFH.

Explanation: The targets of writing to and reading from the Pn register of a port whose PMmn bit is 1 are the output latch and pin status, respectively.

A 1-bit manipulation instruction is executed in the following order in the RL78/L13.

<1> The Pn register is read in 8-bit units.
<2> The targeted one bit is manipulated.
<3> The Pn register is written in 8-bit units.

In step <1>, the output latch value (0) of P10, which is an output port, is read, while the pin statuses of P11 to P17, which are input ports, are read. If the pin statuses of P11 to P17 are high level at this time, the read value is FEH.

The value is changed to FFH by the manipulation in <2>.

FFH is written to the output latch by the manipulation in <3>.

Figure 4-17. Bit Manipulation Instruction (P10)

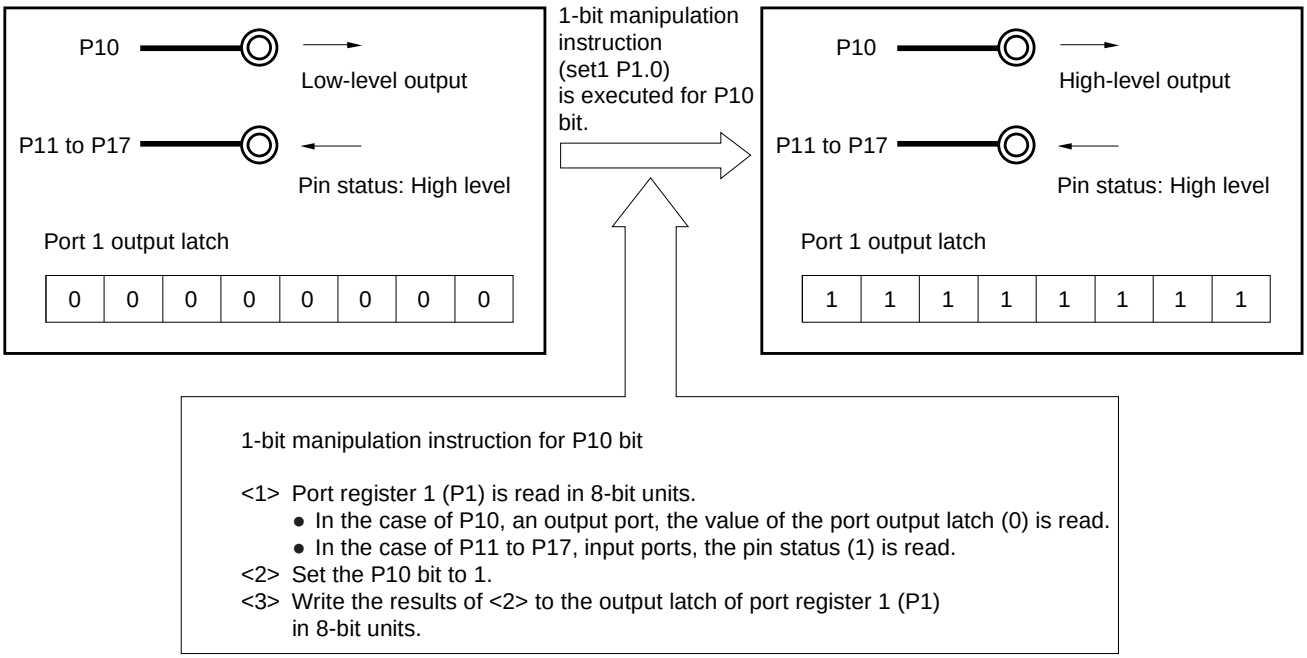

4.6.2 Notes on specifying the pin settings

If the output function of an alternate function is assigned to a pin that is also used as an output pin, the output of the unused alternate function must be set to its initial state so as to prevent conflicting outputs. This also applies to the functions assigned by using the peripheral I/O redirection register (PIOR). For details about the alternate output function, see **4.5 Register Settings When Using Alternate Function**.

No specific setting is required for input pins because the output function of their alternate functions is disabled (the buffer output is Hi-Z).

Disabling the unused functions, including blocks that are only used for input or do not have I/O, is recommended to lower power consumption.

CHAPTER 5 CLOCK GENERATOR

5.1 Functions of Clock Generator

The clock generator generates the clock to be supplied to the CPU and peripheral hardware.
The following three system clocks and clock oscillators are selectable.

(1) Main system clock

<1> X1 oscillator

This circuit oscillates the X1 oscillator clock (f_X = 1 to 20 MHz) by connecting a resonator to the X1 and X2 pins.

Oscillation can be stopped by executing the STOP instruction or setting the MSTOP bit (bit 7 of the clock operation status control register (CSC)).

<2> High-speed on-chip oscillator

The oscillation frequency (f_{HOCO}) can be selected from 48, 24, 16, 12, 8, 6, 4, 3, 2, or 1 MHz (typ.) by using the option byte (000C2H). When 48 MHz is selected as f_{HOCO}, f_{IH} is set to 24 MHz. When 24 MHz or less is selected as f_{HOCO}, f_{IH} is not divided and is set to the same frequency as f_{HOCO}. After reset release, the CPU always starts operating on this high-speed on-chip oscillator clock[Note]. Oscillation can be stopped by executing the STOP instruction or setting the HIOSTOP bit (bit 0 of the CSC register).

The frequency specified by using the option byte can be changed by using the high-speed on-chip oscillator frequency select register (HOCODIV). For details about the frequency, see **Figure 5-10 Format of High-speed On-chip Oscillator Frequency Select Register (HOCODIV)**.

The frequencies that can be specified for the high-speed on-chip oscillator by using the option byte and the high-speed on-chip oscillator frequency select register (HOCODIV) are shown below.

Power Supply Voltage	Oscillation Frequency (MHz)									
	1	2	3	4	6	8	12	16	24	48
2.7 V ≤ V_{DD} ≤ 5.5 V	√	√	√	√	√	√	√	√	√	√
2.4 V ≤ V_{DD} ≤ 5.5 V	√	√	√	√	√	√	√	√	–	–
1.8 V ≤ V_{DD} ≤ 5.5 V	√	√	√	√	√	√	–	–	–	–
1.6 V ≤ V_{DD} ≤ 5.5 V	√	√	√	√	–	–	–	–	–	–

An external main system clock (f_{EX} = 1 to 20 MHz) can also be supplied from the EXCLK/X2/P122 pin. The external main system clock input can be disabled by executing the STOP instruction or setting the MSTOP bit.

As the main system clock, a high-speed system clock (X1 clock or external main system clock) or high-speed on-chip oscillator clock can be selected by setting the MCM0 bit (bit 4 of the system clock control register (CKC)). However, note that the usable frequency range of the main system clock differs depending on the setting of the power supply voltage (VDD). The operating voltage of the flash memory must be set by using the CMODE0 and CMODE1 bits of the option byte (000C2H) (see **CHAPTER 27 OPTION BYTE**).

Note When 48 MHz is selected by setting the FRQSEL4 bit of the option byte (000C2H) to 1, the 48 MHz clock (f_{HOCO}) is supplied to 16-bit timer KB20 and the 24 MHz clock, which is obtained by dividing f_{HOCO} by 2, is supplied to the other functions including the CPU. To supply the 48 MHz clock to 16-bit timer KB20, select f_{IH} as f_{CLK}.

(2) Subsystem clock

● **XT1 clock oscillator**

This circuit oscillates the XT1 oscillator clock (f_{XT} = 32.768 kHz) by connecting a 32.768 kHz resonator to the XT1 and XT2 pins. Oscillation can be stopped by setting the XTSTOP bit (bit 6 of the clock operation status control register (CSC)).

An external subsystem clock (f_{EXS} = 32.768 kHz) can also be supplied from the EXCLKS/XT2/P124 pin. An external subsystem clock input can be disabled by the setting of the XTSTOP bit.

(3) Low-speed on-chip oscillator clock

This circuit oscillates the low-speed on-chip oscillator clock (f_{IL} = 15 kHz (TYP.)).
The low-speed on-chip oscillator clock cannot be used as the CPU clock.
Only the following peripheral hardware runs on the low-speed on-chip oscillator clock.

- Watchdog timer
- Real-time clock 2
- 12-bit interval timer
- LCD controller/driver

This clock operates when either bit 4 (WDTON) of the option byte (000C0H) or bit 4 (WUTMMCK0) of the subsystem clock supply mode control register (OSMC), or both, are set to 1.
However, when WDTON = 1, WUTMMCK0 = 0, and bit 0 (WDSTBYON) of the option byte (000C0H) is 0, oscillation of the low-speed on-chip oscillator stops if the HALT or STOP instruction is executed.

Caution The low-speed on-chip oscillator clock (f_{IL}) can only be selected as the count clock of real-time clock 2 when the fixed-cycle interrupt function is used.

Remark f_X: X1 clock oscillation frequency
f_{HOCO}: High-speed on-chip oscillator clock frequency (48 MHz max.)
f_{IH}: High-speed on-chip oscillator clock frequency (24 MHz max.)**Note**
f_{EX}: External main system clock frequency
f_{XT}: XT1 clock oscillation frequency
f_{EXS}: External subsystem clock frequency
f_{IL}: Low-speed on-chip oscillator clock frequency

Note The f_{IH} frequency can be controlled by hardware so that it becomes half the f_{HOCO} frequency when f_{HOCO} is set to 48 MHz by setting the FRQSEL4 bit of the option byte (000C2H) to 1, or the same frequency as f_{HOCO} when f_{HOCO} is set to 24 MHz or less by setting the FRQSEL4 bit of the option byte (000C2H) to 0.

5.2 Configuration of Clock Generator

The clock generator includes the following hardware.

Table 5-1. Configuration of Clock Generator

Item	Configuration
Control registers	Clock operation mode control register (CMC) System clock control register (CKC) Clock operation status control register (CSC) Oscillation stabilization time counter status register (OSTC) Oscillation stabilization time select register (OSTS) Peripheral enable registers 0 and 1 (PER0, PER1) Subsystem clock supply mode control register (OSMC) High-speed on-chip oscillator frequency select register (HOCODIV) High-speed on-chip oscillator trimming register (HIOTRM)
Oscillators	X1 oscillator XT1 oscillator High-speed on-chip oscillator Low-speed on-chip oscillator

<R>

Figure 5-1. Block Diagram of Clock Generator

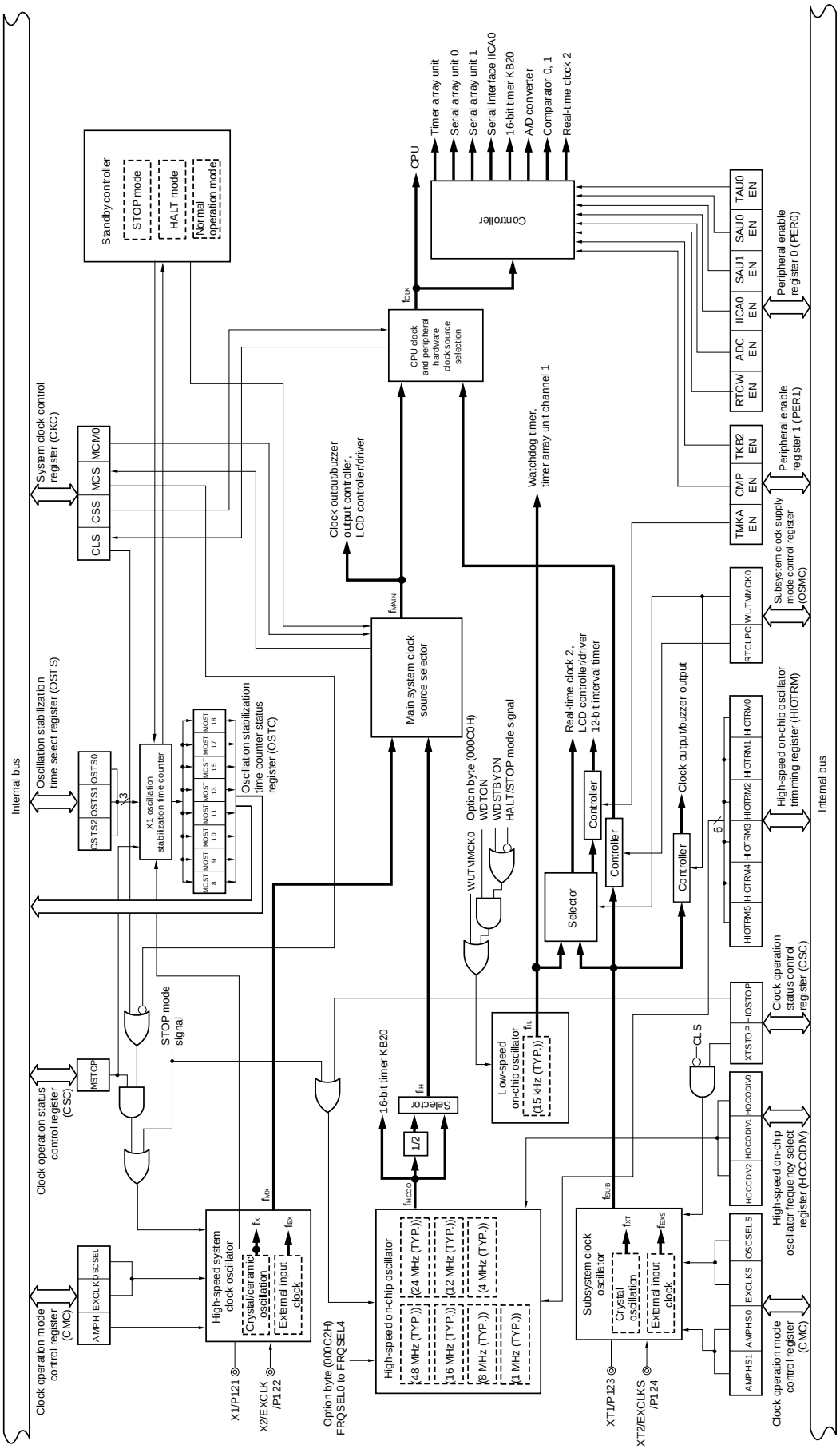

(**Remark** is listed on the next page.)

Remark f_X: X1 clock oscillation frequency
f_{HOCO}: High-speed on-chip oscillator clock frequency (48 MHz max.)
f_{IH}: High-speed on-chip oscillator clock frequency (24 MHz max.)[Note 1]
f_{EX}: External main system clock frequency
f_{MX}: High-speed system clock frequency
f_{MAIN}: Main system clock frequency
f_{XT}: XT1 clock oscillation frequency
f_{EXS}: External subsystem clock frequency
f_{SUB}: Subsystem clock frequency[Note 2]
f_{CLK}: CPU/peripheral hardware clock frequency
f_{IL}: Low-speed on-chip oscillator clock frequency

Notes 1. The f_{IH} frequency can be controlled by hardware so that it becomes half the f_{HOCO} frequency when f_{HOCO} is set to 48 MHz by setting the FRQSEL4 bit of the option byte (000C2H) to 1, or the same frequency as f_{HOCO} when f_{HOCO} is set to 24 MHz or less by setting the FRQSEL4 bit of the option byte (000C2H) to 0. To supply the 48 MHz clock to 16-bit timer KB20, select f_{IH} as f_{CLK}.

2. Selecting f_{SUB} as the output clock of the clock output/buzzer output controller is prohibited when the WUTMMCK0 bit is set to 1.

5.3 Registers Controlling Clock Generator

The following registers are used to control the clock generator.

- Clock operation mode control register (CMC)
- System clock control register (CKC)
- Clock operation status control register (CSC)
- Oscillation stabilization time counter status register (OSTC)
- Oscillation stabilization time select register (OSTS)
- Peripheral enable registers 0 and 1 (PER0, PER1)
- Subsystem clock supply mode control register (OSMC)
- High-speed on-chip oscillator frequency select register (HOCODIV)
- High-speed on-chip oscillator trimming register (HIOTRM)

Caution Which registers and bits are included depends on the product. Be sure to set registers and bits that are not mounted in a product to their initial values.

5.3.1 Clock operation mode control register (CMC)

This register is used to set the operation mode of the X1/P121, X2/EXCLK/P122, XT1/P123, and XT2/EXCLKS/P124 pins, and to select a gain of the oscillator.

The CMC register can be written only once by an 8-bit memory manipulation instruction after reset release. This register can be read by an 8-bit memory manipulation instruction.

Reset signal generation clears this register to 00H.

Caution The EXCLKS, OSCSELS, AMPHS1, and AMPHS0 bits are reset only by a power-on reset; they retain the previous values when a reset caused by another factor occurs.

Figure 5-2. Format of Clock Operation Mode Control Register (CMC)

Address: FFFA0H After reset: 00H[Note] R/W

Symbol	7	6	5	4	3	2	1	0
CMC	EXCLK	OSCSEL	EXCLKS[Note]	OSCSELS[Note]	0	AMPHS1[Note]	AMPHS0[Note]	AMPH

EXCLK	OSCSEL	High-speed system clock pin operation mode	X1/P121 pin	X2/EXCLK/P122 pin
0	0	Input port mode	Input port	
0	1	X1 oscillation mode	Crystal/ceramic resonator connection	
1	0	Input port mode	Input port	
1	1	External clock input mode	Input port	External clock input

EXCLKS	OSCSELS	Subsystem clock pin operation mode	XT1/P123 pin	XT2/EXCLKS/P124 pin
0	0	Input port mode	Input port	
0	1	XT1 oscillation mode	Crystal resonator connection	
1	0	Input port mode	Input port	
1	1	External clock input mode	Input port	External clock input

AMPHS1	AMPHS0	XT1 oscillator oscillation mode selection
0	0	Low power consumption oscillation (default)
0	1	Normal oscillation
1	0	Ultra-low power consumption oscillation
1	1	Setting prohibited

AMPH	Control of X1 clock oscillation frequency
0	1 MHz ≤ f_X ≤ 10 MHz
1	10 MHz < f_X ≤ 20 MHz

Note The EXCLKS, OSCSELS, AMPHS1, and AMPHS0 bits are reset only by a power-on reset; they retain the values when a reset caused by another factor occurs.

Cautions 1. The CMC register can be written only once after a reset ends, by an 8-bit memory manipulation instruction. When using the CMC register with its initial value (00H), be sure to set the register to 00H after a reset ends in order to prevent malfunction due to a program loop. A malfunction caused by mistakenly writing a value other than 00H is unrecoverable.

2. After a reset ends, set up the CMC register before setting the clock operation status control register (CSC) to start X1 or XT1 oscillation .

3. Be sure to set the AMPH bit to 1 if the X1 clock oscillation frequency exceeds 10 MHz.

4. Specify the settings for the AMPH, AMPHS1, and AMPHS0 bits while f_{IH} is selected as f_{CLK} after a reset ends (before f_{CLK} is switched to f_{MX}).

5. Count the f_{XT} oscillation stabilization time by using software.

(The **cautions** continue and **Remark** is given on the next page.)

Cautions 6. Although the maximum system clock frequency is 24 MHz, the maximum frequency of the X1 oscillator is 20 MHz.

7. If a reset other than a power-on reset occurs after the CMC register is written and then the reset ends, be sure to set the CMC register to the value specified before the reset occurred, to prevent a malfunction if a program loop occurs.

8. The XT1 oscillator is a circuit with low amplification in order to achieve low-power consumption. Note the following points when designing the circuit.

- **Pins and circuit boards include parasitic capacitance. Therefore, perform oscillation evaluation using a circuit board to be actually used and confirm that there are no problems.**
- **Before using the ultra-low power consumption oscillation (AMPHS1, AMPHS0 = 1, 0) as the mode of the XT1 oscillator, evaluate the resonators described in 5.7 Resonator and Oscillator Constants.**
- **Make the wiring between the XT1 and XT2 pins and the resonators as short as possible, and minimize the parasitic capacitance and wiring resistance. Note this particularly when the ultra-low power consumption oscillation (AMPHS1, AMPHS0 = 1, 0) is selected.**
- **Configure the circuit of the circuit board, using material with little wiring resistance.**
- **Place a ground pattern that has the same potential as V_{SS} as much as possible near the XT1 oscillator.**
- **Be sure that the signal lines between the XT1 and XT2 pins, and the resonators do not cross with the other signal lines. Do not route the wiring near a signal line through which a high fluctuating current flows.**
- **The impedance between the XT1 and XT2 pins may drop and oscillation may be disturbed due to moisture absorption of the circuit board in a high-humidity environment or dew condensation on the board. When using the circuit board in such an environment, take measures to damp-proof the circuit board, such as by coating.**
- **When coating the circuit board, use material that does not cause capacitance or leakage between the XT1 and XT2 pins.**

Remark f_X: X1 clock frequency

5.3.2 System clock control register (CKC)

This register is used to select a CPU/peripheral hardware clock and a main system clock.

The CKC register can be set by a 1-bit or 8-bit memory manipulation instruction.

Reset signal generation sets this register to 00H.

Figure 5-3. Format of System Clock Control Register (CKC)

Address: FFFA4H After reset: 00H R/W[Note 1]

Symbol	<7>	<6>	<5>	<4>	3	2	1	0
CKC	CLS	CSS	MCS	MCM0	0	0	0	0

CLS	Status of CPU/peripheral hardware clock (f_{CLK})
0	Main system clock (f_{MAIN})
1	Subsystem clock (f_{SUB})

CSS	Selection of CPU/peripheral hardware clock (f_{CLK})
0	Main system clock (f_{MAIN})
1[Note 2]	Subsystem clock (f_{SUB})

MCS	Status of main system clock (f_{MAIN})
0	High-speed on-chip oscillator clock (f_{IH})
1	High-speed system clock (f_{MX})

MCM0[Note 2]	Main system clock (f_{MAIN}) operation control
0	Selects the high-speed on-chip oscillator clock (f_{IH}) as the main system clock (f_{MAIN})
1	Selects the high-speed system clock (f_{MX}) as the main system clock (f_{MAIN})

Notes 1. Bits 7 and 5 are read-only.

2. Changing the value of the MCM0 bit is prohibited while the CSS bit is set to 1.

Remark f_{HOCO}: High-speed on-chip oscillator clock frequency (48 MHz max.)

f_{IH}: High-speed on-chip oscillator clock frequency (24 MHz max.)[Note]

f_{MX}: High-speed system clock frequency

f_{MAIN}: Main system clock frequency

f_{SUB}: Subsystem clock frequency

Note The f_{IH} frequency can be controlled by hardware so that it becomes half the f_{HOCO} frequency when f_{HOCO} is set to 48 MHz by setting the FRQSEL4 bit of the option byte (000C2H) to 1, or the same frequency as f_{HOCO} when f_{HOCO} is set to 24 MHz or less by setting the FRQSEL4 bit of the option byte (000C2H) to 0. To supply the 48 MHz clock to 16-bit timer KB20, select f_{IH} as f_{CLK}.

(**Cautions** are listed on the next page.)

Cautions 1. Be sure to set bits 3 to 0 to "0".

2. The clock set by the CSS bit is supplied to the CPU and peripheral hardware. If the CPU clock is changed, therefore, the clock supplied to peripheral hardware (except the real-time clock 2, 12-bit interval timer, clock output/buzzer output controller, LCD controller/driver, and watchdog timer) is also changed at the same time. Consequently, you should stop each peripheral function when changing the CPU/peripheral hardware clock.

3. If the subsystem clock is used as the peripheral hardware clock, the operations of the A/D converter and IICA are not guaranteed. For the operating characteristics of the peripheral hardware, refer to the chapters describing the various peripheral hardware as well as CHAPTER 32 ELECTRICAL SPECIFICATIONS (T_A = –40 to +85°C) and CHAPTER 33 ELECTRICAL SPECIFICATIONS (T_A = –40 to +105°C).

4. When selecting f_{HOCO} as the count source clock for 16-bit timer KB20, select f_{IH} as f_{CLK} before setting bit 4 (TKB2EN) of peripheral enable register 1 (PER1). When changing f_{CLK} to a clock other than f_{IH}, first clear bit 4 (TKB2EN) of peripheral enable register 1 (PER1).

5.3.3 Clock operation status control register (CSC)

This register is used to control the operations of the high-speed system clock, high-speed on-chip oscillator clock, and subsystem clock (except the low-speed on-chip oscillator clock).

The CSC register can be set by a 1-bit or 8-bit memory manipulation instruction.

Reset signal generation sets this register to C0H.

Caution The XTSTOP bit is reset only by a power-on reset; it retains the value when a reset caused by another factor occurs.

Figure 5-4. Format of Clock Operation Status Control Register (CSC)

Address: FFFA1H After reset: C0H R/W

Symbol	<7>	<6>	5	4	3	2	1	<0>
CSC	MSTOP	XTSTOP[Note]	0	0	0	0	0	HIOSTOP

MSTOP	High-speed system clock operation control		
	X1 oscillation mode	External clock input mode	Input port mode
0	X1 oscillator operating	External clock from EXCLK pin is valid	Input port
1	X1 oscillator stopped	External clock from EXCLK pin is invalid	

XTSTOP	Subsystem clock operation control		
	XT1 oscillation mode	External clock input mode	Input port mode
0	XT1 oscillator operating	External clock from EXCLKS pin is valid	Input port
1	XT1 oscillator stopped	External clock from EXCLKS pin is invalid	

HIOSTOP	High-speed on-chip oscillator clock operation control
0	High-speed on-chip oscillator operating
1	High-speed on-chip oscillator stopped

Note The XTSTOP bit is reset only by a power-on reset; it retains the value when a reset caused by another factor occurs.

Cautions 1. After reset release, set the clock operation mode control register (CMC) before setting the CSC register.

2. Set up the oscillation stabilization time select register (OSTS) before setting the MSTOP bit to 0 after releasing reset. Note that if the OSTS register is used with its default settings, setting the OSTS register is not required here.

3. When starting X1 oscillation by setting the MSTOP bit, check the oscillation stabilization time of the X1 clock by using the oscillation stabilization time counter status register (OSTC).

4. When starting XT1 oscillation by setting the XTSTOP bit, wait for oscillation of the subsystem clock to stabilize by setting a wait time using software.

5. Do not stop the clock selected for the CPU/peripheral hardware clock (f_{CLK}) by using the OSC register.

(The **cautions** continue on the next page.)

Cautions 6. The setting of the flags of the register to stop clock oscillation (disabling the external clock input) and the condition before clock oscillation is stopped are shown in Table 5-2. Before stopping the clock oscillation, check the precondition for stopping the clock oscillation.

Table 5-2. Stopping the Clock

Clock	Condition Before Stopping Clock (Disabling External Clock Input)	Setting of CSC Register Flags
X1 oscillator clock	The CPU/peripheral hardware clock is a clock other than the high-speed system clock. (CLS = 0 and MCS = 0, or CLS = 1)	MSTOP = 1
External main system clock		
XT1 oscillator clock	The CPU/peripheral hardware clock is a clock other than the subsystem clock. (CLS = 0)	XTSTOP = 1
External subsystem clock		
High-speed on-chip oscillator clock	The CPU/peripheral hardware clock is a clock other than the high-speed on-chip oscillator clock. (CLS = 0 and MCS = 1, or CLS = 1)	HIOSTOP = 1

5.3.4 Oscillation stabilization time counter status register (OSTC)

This is the register that indicates the count status of the X1 clock oscillation stabilization time counter.

The X1 clock oscillation stabilization time can be checked in the following cases:

- If the X1 clock starts oscillating while the high-speed on-chip oscillator clock or subsystem clock is used as the CPU clock
- If the STOP mode is entered and then exited while the high-speed on-chip oscillator clock is used as the CPU clock and the X1 clock is oscillating

The OSTC register can be read by a 1-bit or 8-bit memory manipulation instruction.

Occurrence of a reset signal, executing the STOP instruction, or setting MSTOP (bit 7 of clock operation status control register (CSC)) to 1 clears the OSTC register to 00H.

Remark The oscillation stabilization time counter starts counting in the following cases.
- When oscillation of the X1 clock starts (EXCLK, OSCSEL = 0, 1 → MSTOP = 0)
- When the STOP mode is exited

Figure 5-5. Format of Oscillation Stabilization Time Counter Status Register (OSTC)

Address: FFFA2H After reset: 00H R

Symbol	7	6	5	4	3	2	1	0
OSTC	MOST 8	MOST 9	MOST 10	MOST 11	MOST 13	MOST 15	MOST 17	MOST 18

MOST 8	MOST 9	MOST 10	MOST 11	MOST 13	MOST 15	MOST 17	MOST 18	Oscillation stabilization time status		
									f_X = 10 MHz	f_X = 20 MHz
0	0	0	0	0	0	0	0	$2^8/f_X$ max.	25.6 μs max.	12.8 μs max.
1	0	0	0	0	0	0	0	$2^8/f_X$ min.	25.6 μs min.	12.8 μs min.
1	1	0	0	0	0	0	0	$2^9/f_X$ min.	51.2 μs min.	25.6 μs min.
1	1	1	0	0	0	0	0	$2^{10}/f_X$ min.	102 μs min.	51.2 μs min.
1	1	1	1	0	0	0	0	$2^{11}/f_X$ min.	204 μs min.	102 μs min.
1	1	1	1	1	0	0	0	$2^{13}/f_X$ min.	819 μs min.	409 μs min.
1	1	1	1	1	1	0	0	$2^{15}/f_X$ min.	3.27 ms min.	1.63 ms min.
1	1	1	1	1	1	1	0	$2^{17}/f_X$ min.	13.1 ms min.	6.55 ms min.
1	1	1	1	1	1	1	1	$2^{18}/f_X$ min.	26.2 ms min.	13.1 ms min.

Cautions 1. After the above time has elapsed, the bits are set to 1 starting from the MOST8 bit, and remain 1.

2. The oscillation stabilization time counter counts up to the oscillation stabilization time set by the oscillation stabilization time select register (OSTS).
In the following cases, set the oscillation stabilization time of the OSTS register to a value greater than the count value to be monitored by using the OSTC register after the oscillation starts.

- **To start X1 clock oscillation while the high-speed on-chip oscillator clock or subsystem clock is used as the CPU clock.**
- **To enter and exit the STOP mode while the high-speed on-chip oscillator clock is used as the CPU clock and the X1 clock is oscillating.**
  (Note, therefore, that only the status up to the oscillation stabilization time set by the OSTS register is set to the OSTC register after the STOP mode is exited.)

3. The X1 clock oscillation stabilization wait time does not include the time until clock oscillation starts ("a" below).

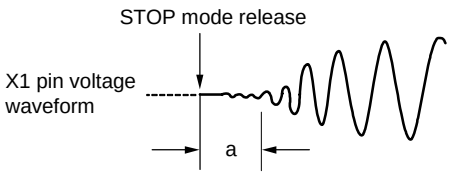

Remark f_X: X1 clock oscillation frequency

5.3.5 Oscillation stabilization time select register (OSTS)

This register is used to select the X1 clock oscillation stabilization wait time.

When the X1 clock is made to oscillate by clearing the MSTOP bit to start the X1 oscillation circuit operating, actual operation is automatically delayed for the time set in the OSTS register.

When switching the CPU clock from the high-speed on-chip oscillator clock or the subsystem clock to the X1 clock, and when using the high-speed on-chip oscillator clock for switching the X1 clock from the oscillating state to STOP mode, use the oscillation stabilization time counter status register (OSTC) to confirm that the desired oscillation stabilization time has elapsed after release from the STOP mode. The oscillation stabilization time can be checked up to the time set by using the OSTC register.

The OSTS register can be set by an 8-bit memory manipulation instruction.

Reset signal generation sets the OSTS register to 07H.

Figure 5-6. Format of Oscillation Stabilization Time Select Register (OSTS)

Address: FFFA3H After reset: 07H R/W

Symbol	7	6	5	4	3	2	1	0
OSTS	0	0	0	0	0	OSTS2	OSTS1	OSTS0

OSTS2	OSTS1	OSTS0	Oscillation stabilization time selection		
				f_X = 10 MHz	f_X = 20 MHz
0	0	0	$2^8/f_X$	25.6 μs	12.8 μs
0	0	1	$2^9/f_X$	51.2 μs	25.6 μs
0	1	0	$2^{10}/f_X$	102 μs	51.2 μs
0	1	1	$2^{11}/f_X$	204 μs	102 μs
1	0	0	$2^{13}/f_X$	819 μs	409 μs
1	0	1	$2^{15}/f_X$	3.27 ms	1.64 ms
1	1	0	$2^{17}/f_X$	13.1 ms	6.55 ms
1	1	1	$2^{18}/f_X$	26.2 ms	13.1 ms

Cautions 1. Change the setting of the OSTS register before setting the MSTOP bit of the clock operation status control register (CSC) to 0.

2. The oscillation stabilization time counter counts up to the oscillation stabilization time set by the OSTS register.

In the following cases, set the oscillation stabilization time of the OSTS register to a value greater than the count value to be monitored by using the OSTC register after the oscillation starts.

- **To start X1 clock oscillation while the high-speed on-chip oscillator clock or subsystem clock is used as the CPU clock.**
- **To enter and exit the STOP mode while the high-speed on-chip oscillator clock is used as the CPU clock and the X1 clock is oscillating.**
  (Note, therefore, that only the status up to the oscillation stabilization time set by the OSTS register is set to the OSTC register after the STOP mode is exited.)

3. The X1 clock oscillation stabilization wait time does not include the time until clock oscillation starts ("a" below).

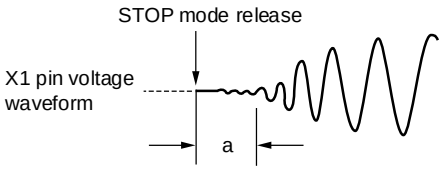

Remark f_X: X1 clock oscillation frequency

5.3.6 Peripheral enable registers 0 and 1 (PER0, PER1)

These registers are used to enable or disable supplying the clock to the peripheral hardware. Clock supply to the hardware not used is also stopped so as to reduce the power consumption and noise.

To use the peripheral functions below, which are controlled by these registers, set the bit corresponding to each function to 1 before initial setup of the peripheral functions.

- Real-time clock 2
- A/D converter
- Serial interface IICA0
- Serial array unit 1
- Serial array unit 0
- Timer array unit
- 12-bit interval timer
- Comparators 0 and 1
- 16-bit timer KB20

The PER0 and PER1 registers can be set by a 1-bit or 8-bit memory manipulation instruction.

Reset signal generation clears these registers to 00H.

Figure 5-7. Format of Peripheral Enable Register 0 (PER0) (1/2)

Address: F00F0H After reset: 00H R/W

Symbol	<7>	6	<5>	<4>	<3>	<2>	1	<0>
PER0	RTCWEN	0	ADCEN	IICA0EN	SAU1EN	SAU0EN	0	TAU0EN

RTCWEN	Control of real-time clock 2 (RTC2) input clock supply
0	Stops input clock supply. ● SFRs used by the real-time clock 2 (RTC2) cannot be written. ● The real-time clock 2 (RTC2) is operable.
1	Enables input clock supply. ● SFRs used by the real-time clock 2 (RTC2) can be read and written. ● The real-time clock 2 (RTC2) is operable.

ADCEN	Control of A/D converter input clock supply
0	Stops input clock supply. ● SFRs used by the A/D converter cannot be written. ● The A/D converter is in the reset status.
1	Enables input clock supply. ● SFRs used by the A/D converter can be read and written.

Caution Be sure to clear bits 6 and 1 to “0”.

Figure 5-7. Format of Peripheral Enable Register 0 (PER0) (2/2)

Address: F00F0H After reset: 00H R/W

Symbol	<7>	6	<5>	<4>	<3>	<2>	1	<0>
PER0	RTCWEN	0	ADCEN	IICA0EN	SAU1EN	SAU0EN	0	TAU0EN

IICA0EN	Control of serial interface IICA0 input clock supply
0	Stops input clock supply. ● SFRs used by serial interface IICA0 cannot be written. ● Serial interface IICA0 is in the reset status.
1	Enables input clock supply. ● SFRs used by serial interface IICA0 can be read and written.

SAU1EN	Control of serial array unit 1 input clock supply
0	Stops input clock supply. ● SFRs used by serial array unit 1 cannot be written. ● Serial array unit 1 is in the reset status.
1	Enables input clock supply. ● SFRs used by serial array unit 1 can be read and written.

SAU0EN	Control of serial array unit 0 input clock supply
0	Stops input clock supply. ● SFRs used by serial array unit 0 cannot be written. ● Serial array unit 0 is in the reset status.
1	Enables input clock supply. ● SFRs used by serial array unit 0 can be read and written.

TAU0EN	Control of timer array unit input clock supply
0	Stops input clock supply. ● SFRs used by timer array unit cannot be written. ● Timer array unit is in the reset status.
1	Enables input clock supply. ● SFRs used by timer array unit can be read and written.

Caution Be sure to clear bits 6 and 1 to “0”.

Figure 5-8. Format of Peripheral Enable Register 1 (PER1)

Address: F007AH After reset: 00H R/W

Symbol	<7>	6	<5>	<4>	3	2	1	0
PER1	TMKAEN	0	CMPEN	TKB2EN	0	0	0	0

TMKAEN	Control of 12-bit interval timer input clock supply
0	Stops input clock supply. ● SFRs used by the 12-bit interval timer cannot be written. ● The 12-bit interval timer is in the reset status.
1	Enables input clock supply. ● SFRs used by the 12-bit interval timer can be read and written.

CMPEN	Control of comparators 0/1 input clock supply
0	Stops input clock supply. ● SFRs used by comparators 0 and 1 cannot be written. ● Comparators 0 and 1 are in the reset status.
1	Enables input clock supply. ● SFRs used by comparators 0 and 1 can be read and written.

TKB2EN[Note]	Control of 16-bit timer KB20 input clock supply
0	Stops input clock supply. ● SFRs used by 16-bit timer KB20 cannot be written. ● 16-bit timer KB20 is in the reset status.
1	Enables input clock supply. ● SFRs used by 16-bit timer KB20 can be read and written.

Note When FRQSEL4 in the user option byte (000C2H) is 1, select f_{IH} as f_{CLK} before setting bit 4 (TKB2EN) of peripheral enable register 1 (PER1). When changing f_{CLK} to a clock other than f_{IH}, first clear bit 4 (TKB2EN) of peripheral enable register 1 (PER1).

Caution Be sure to clear bits 6 and 3 to 0 to "0".

5.3.7 Subsystem clock supply mode control register (OSMC)

This register is used to reduce power consumption by stopping unnecessary clock functions.

If the RTCLPC bit is set to 1, power consumption can be reduced, because clock supply to the peripheral functions other than real-time clock 2, 12-bit interval timer, clock output/buzzer output controller, and LCD controller/driver is stopped in STOP mode or in HALT mode while the subsystem clock is selected as the CPU clock.

In addition, the OSMC register can be used to select the operation clock of real-time clock 2, 12-bit interval timer, clock output/buzzer output controller, and LCD controller/driver.

The OSMC register can be set by an 8-bit memory manipulation instruction.

Reset signal generation clears this register to 00H.

Figure 5-9. Format of Subsystem Clock Supply Mode Control Register (OSMC)

Address: F00F3H After reset: 00H R/W

Symbol	7	6	5	4	3	2	1	0
OSMC	RTCLPC	0	0	WUTMMCK0	0	0	0	0

RTCLPC	Setting in STOP mode or in HALT mode while subsystem clock is selected as CPU clock
0	Enables supplying the subsystem clock to peripheral functions (See **Tables 21-1** to **21-3** for peripheral functions whose operations are enabled.)
1	Stops supplying the subsystem clock to peripheral functions other than real-time clock 2, 12-bit interval timer, clock output/buzzer output controller, and LCD controller/driver.

WUTMMCK0	Selection of operation clock for real-time clock 2, 12-bit interval timer, and LCD controller/driver	Selection of clock output from PCLBUZn pin of clock output/buzzer output controller
0	Subsystem clock (f_{SUB})	Selecting the subsystem clock (f_{SUB}) is enabled.
1	Low-speed on-chip oscillator clock (f_{IL})	Selecting the subsystem clock (f_{SUB}) is disabled.

Cautions 1. Be sure to select the subsystem clock (WUTMMCK0 bit = 0) if the subsystem clock is oscillating.

2. When WUTMMCK0 is set to 1, the low-speed on-chip oscillator clock oscillates.

3. When WUTMMCK0 is set to 1, only the constant-period interrupt function of real-time clock 2 can be used. The year, month, day of the week, day, hour, minute, and second counters and the 1 Hz output function of real-time clock 2 cannot be used. The interval of the constant-period interrupt is calculated by constant period (value selected by using the RTCC0 register) × f_{SUB}/f_{IL}.

4. The subsystem clock and low-speed on-chip oscillator clock can only be switched by using the WUTMMCK0 bit if real-time clock 2, 12-bit interval timer, and LCD controller/driver are all stopped.

5. Do not select f_{SUB} as the clock output or buzzer output clock when the WUTMMCK0 bit is 1.

5.3.8 High-speed on-chip oscillator frequency select register (HOCODIV)

This register is used to change the high-speed on-chip oscillator frequency set by an option byte (000C2H). However, the selectable frequency depends on the FRQSEL4 and FRQSEL3 bits of the option byte (000C2H).

The HOCODIV register can be set by an 8-bit memory manipulation instruction.

Reset signal generation clears this register to the value set by FRQSEL2 to FRQSEL0 of the option byte (000C2H).

Figure 5-10. Format of High-speed On-chip Oscillator Frequency Select Register (HOCODIV)

Address: F00A8H After reset: undefined R/W

Symbol	7	6	5	4	3	2	1	0
HOCODIV	0	0	0	0	0	HOCODIV2	HOCODIV1	HOCODIV0

HOCODIV2	HOCODIV1	HOCODIV0	Selection of high-speed on-chip oscillator clock frequency		
			FRQSEL4 = 0		FRQSEL4 = 1
			FRQSEL3 = 0	FRQSEL3 = 1	FRQSEL3 = 0
0	0	0	f_{IH} = 24 MHz	Setting prohibited	f_{IH} = 24 MHz f_{HOCO} = 48 MHz
0	0	1	f_{IH} = 12 MHz	f_{IH} = 16 MHz	f_{IH} = 12 MHz f_{HOCO} = 24 MHz
0	1	0	f_{IH} = 6 MHz	f_{IH} = 8 MHz	f_{IH} = 6 MHz f_{HOCO} = 12 MHz
0	1	1	f_{IH} = 3 MHz	f_{IH} = 4 MHz	f_{IH} = 3 MHz f_{HOCO} = 6 MHz
1	0	0	Setting prohibited	f_{IH} = 2 MHz	Setting prohibited
1	0	1	Setting prohibited	f_{IH} = 1 MHz	Setting prohibited
Other than above			Setting prohibited		

Cautions 1. For the HOCODIV register, specify a value in the operating voltage range corresponding to the flash operation mode specified in the option byte (000C2H), regardless of whether the frequency is changed.

Option Byte (000C2H) Value		Flash Operation Mode	Operating Frequency Range	Operating Voltage Range
CMODE1	CMODE2			
0	0	LV (low-voltage main) mode	1 to 4 MHz	1.6 to 5.5 V
1	0	LS (low-speed main) mode	1 to 8 MHz	1.8 to 5.5 V
1	1	HS (high-speed main) mode	1 to 16 MHz	2.4 to 5.5 V
			1 to 24 MHz	2.7 to 5.5 V
Other than above		Setting prohibited		

2. Specify the HOCODIV register settings after first selecting the high-speed on-chip oscillator clock (f_{IH}) as the CPU/peripheral hardware clock (f_{CLK}).

3. After changing the frequency setting by using the HOCODIV register, the system will begin operating on the new frequency after the transition time shown below has elapsed. Even if the same value is set in the HOCODIV register, a CPU/peripheral hardware clock wait of up to three clocks will occur.

<R>

- **Operation for up to three clocks at the pre-change frequency**
- **CPU/peripheral hardware clock wait at the post-change frequency for up to three clocks**

5.3.9 High-speed on-chip oscillator trimming register (HIOTRM)

This register is used to adjust the accuracy of the high-speed on-chip oscillator.

With self-measurement of the high-speed on-chip oscillator frequency via a timer using high-accuracy external clock input (timer array unit), and so on, the accuracy can be adjusted.

The HIOTRM register can be set by an 8-bit memory manipulation instruction.

Caution The frequency will vary if the temperature and V_{DD} pin voltage change after accuracy adjustment. When the temperature and V_{DD} voltage change, accuracy adjustment must be executed regularly or before the frequency accuracy is required.

Figure 5-11. Format of High-Speed On-Chip Oscillator Trimming Register (HIOTRM)

Address: F00A0H After reset: Undefined[Note] R/W

Symbol	7	6	5	4	3	2	1	0
HIOTRM	0	0	HIOTRM5	HIOTRM4	HIOTRM3	HIOTRM2	HIOTRM1	HIOTRM0

HIOTRM5	HIOTRM4	HIOTRM3	HIOTRM2	HIOTRM1	HIOTRM0	High-speed on-chip oscillator
0	0	0	0	0	0	Minimum speed
0	0	0	0	0	1	↑
0	0	0	0	1	0	
0	0	0	0	1	1	
0	0	0	1	0	0	
• • •						
1	1	1	1	1	0	↓
1	1	1	1	1	1	Maximum speed

Note The value after reset is the value adjusted at shipment.

Remarks 1. The HIOTRM register holds a six-bit value used to adjust the high-speed on-chip oscillator with an increment of 1 corresponding to an increase of frequency by about 0.05%.

2. For the usage example of the HIOTRM register, refer to the application note for **RL78 MCU Series High-speed On-chip Oscillator (HOCO) Clock Frequency Correction (R01AN0464)**.

5.4 System Clock Oscillator

5.4.1 X1 oscillator

The X1 oscillator oscillates with a crystal resonator or ceramic resonator (1 to 20 MHz) connected to the X1 and X2 pins.

An external clock can also be input. In this case, input the clock signal to the EXCLK pin.

To use the X1 oscillator, set bits 7 and 6 (EXCLK, OSCSEL) of the clock operation mode control register (CMC) as follows.

- Crystal or ceramic oscillation: EXCLK, OSCSEL = 0, 1
- External clock input: EXCLK, OSCSEL = 1, 1

When the X1 oscillator is not used, specify the input port mode (EXCLK, OSCSEL = 0, 0).

When the X1 and X2 pins are not used as input port pins, either, see **Table 2-2 Connection of Unused Pins**.

Figure 5-12 shows an example of the external circuit connected to the X1 oscillator.

Figure 5-12. Example of External Circuit Connected to X1 Oscillator

(a) Crystal or ceramic oscillation **(b) External clock**

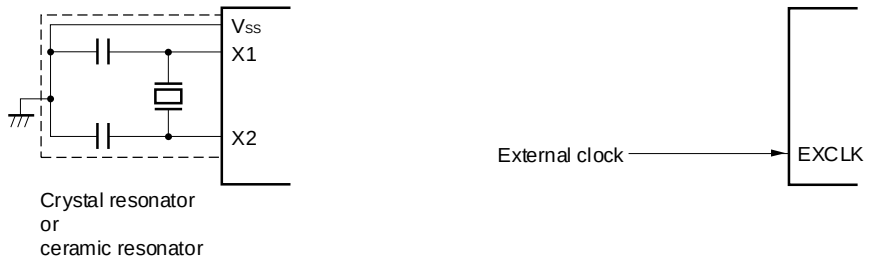

Cautions are listed on the next page.

5.4.2 XT1 oscillator

The XT1 oscillator oscillates with a crystal resonator (32.768 kHz typ.) connected to the XT1 and XT2 pins.

To use the XT1 oscillator, set bit 4 (OSCSELS) of the clock operation mode control register (CMC) to 1.

An external clock can also be input. In this case, input the clock signal to the EXCLKS pin.

To use the XT1 oscillator, set bits 5 and 4 (EXCLKS, OSCSELS) of the clock operation mode control register (CMC) as follows.

- Crystal or ceramic oscillation: EXCLKS, OSCSELS = 0, 1
- External clock input: EXCLKS, OSCSELS = 1, 1

When the XT1 oscillator is not used, specify the input port mode (EXCLKS, OSCSELS = 0, 0).

When the XT1 and XT2 pins are not used as input port pins, either, see **Table 2-2 Connection of Unused Pins**.

Figure 5-13 shows an example of the external circuit connected to the XT1 oscillator.

Figure 5-13. Example of External Circuit Connected to XT1 Oscillator

(a) Crystal oscillation **(b) External clock**

Caution **When using the X1 oscillator and XT1 oscillator, wire as follows in the area enclosed by the broken lines in the Figures 5-12 and 5-13 to avoid an adverse effect from wiring capacitance.**

- **Keep the wiring length as short as possible.**
- **Do not cross the wiring with the other signal lines. Do not route the wiring near a signal line through which a high fluctuating current flows.**
- **Always make the ground point of the oscillator capacitor the same potential as V_{SS}. Do not ground the capacitor to a ground pattern through which a high current flows.**
- **Do not fetch signals from the oscillator.**

The XT1 oscillator is a circuit with low amplification in order to achieve low-power consumption. Note the following points when designing the circuit.

- **Pins and circuit boards include parasitic capacitance. Therefore, perform oscillation evaluation using a circuit board to be actually used and confirm that there are no problems.**
- **Before using the ultra-low power consumption oscillation (AMPHS1, AMPHS0 = 1, 0) as the mode of the XT1 oscillator, evaluate the resonators described in 5.7 Resonator and Oscillator Constants.**
- **Make the wiring between the XT1 and XT2 pins and the resonators as short as possible, and minimize the parasitic capacitance and wiring resistance. Note this particularly when the ultra-low power consumption oscillation (AMPHS1, AMPHS0 = 1, 0) is selected.**
- **Configure the circuit of the circuit board, using material with little wiring resistance.**
- **Place a ground pattern that has the same potential as V_{SS} as much as possible near the XT1 oscillator.**
- **Be sure that the signal lines between the XT1 and XT2 pins, and the resonators do not cross with the other signal lines. Do not route the wiring near a signal line through which a high fluctuating current flows.**
- **The impedance between the XT1 and XT2 pins may drop and oscillation may be disturbed due to moisture absorption of the circuit board in a high-humidity environment or dew condensation on the board. When using the circuit board in such an environment, take measures to damp-proof the circuit board, such as by coating.**
- **When coating the circuit board, use material that does not cause capacitance or leakage between the XT1 and XT2 pins.**

Figure 5-14 shows examples of incorrect resonator connection.

Figure 5-14. Examples of Incorrect Resonator Connection (1/2)

(a) Too long wiring

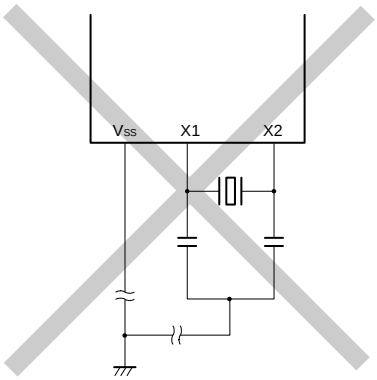

(b) Crossed signal line

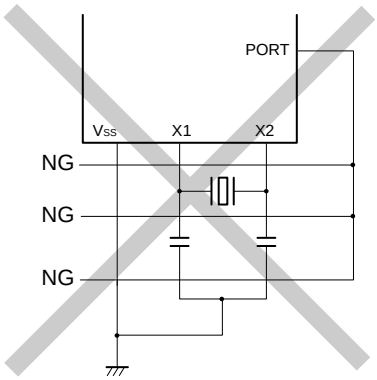

(c) The X1 and X2 signal line wires cross.

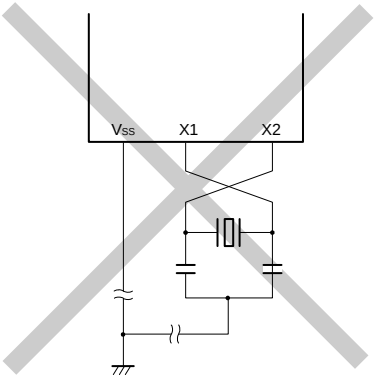

(d) A power supply/GND pattern exists under the X1 and X2 wires.

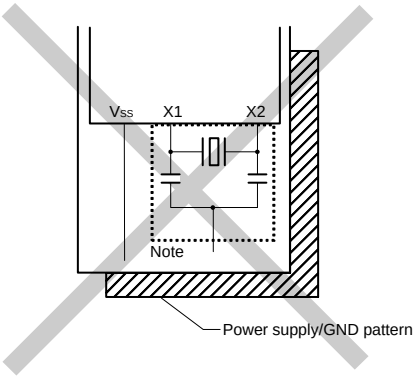

Note Do not place a power supply/GND pattern under the wiring section (section indicated by a broken line in the figure) of the X1 and X2 pins and the resonators in a multi-layer board or double-sided board.
Do not configure a layout that will cause capacitance elements and affect the oscillation characteristics.

Remark When using the subsystem clock, replace X1 and X2 with XT1 and XT2, respectively.

Figure 5-14. Examples of Incorrect Resonator Connection (2/2)

(e) Wiring near high alternating current

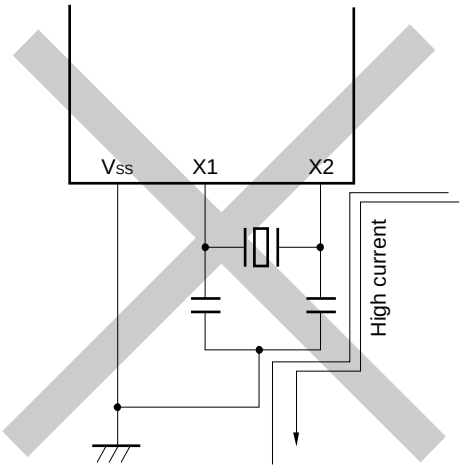

(f) Current flowing through ground line of oscillator (potential at points A, B, and C fluctuates)

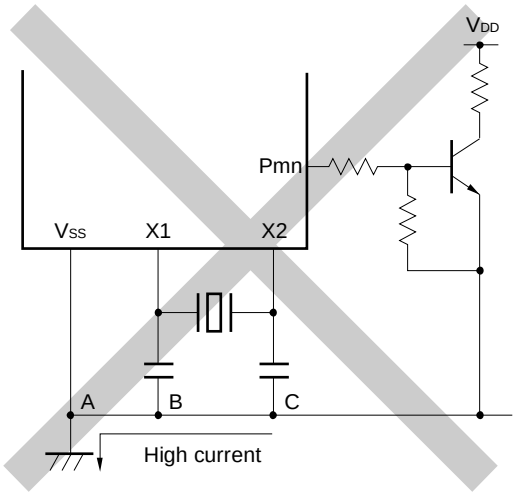

(g) Signals are fetched

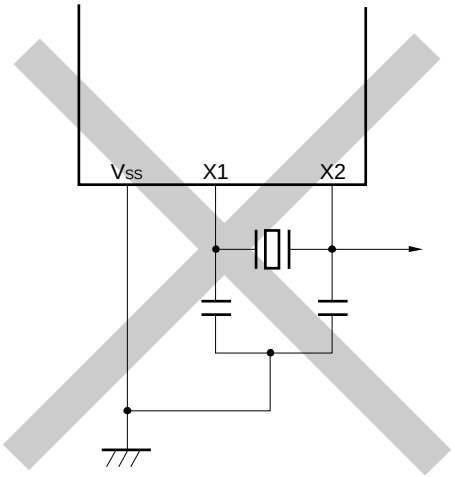

Caution When X2 and XT1 are wired in parallel, the crosstalk noise of X2 may increase with XT1, resulting in malfunctioning.

Remark When using the subsystem clock, replace X1 and X2 with XT1 and XT2, respectively. Also, insert resistors in series on the XT2 side.

5.4.3 High-speed on-chip oscillator

A high-speed on-chip oscillator is incorporated in the RL78/L13. The frequency can be selected from among 48, 24, 16, 12, 8, 6, 4, 3, 2, or 1 MHz by using the option byte (000C2H). When 48 MHz is selected, the oscillation clock is divided by 2 and supplied as the CPU clock. Oscillation can be controlled by using bit 0 (HIOSTOP) of the clock operation status control register (CSC). The high-speed on-chip oscillator automatically starts oscillating after reset release.

5.4.4 Low-speed on-chip oscillator

A low-speed on-chip oscillator is incorporated in the RL78/L13.

The low-speed on-chip oscillator clock is used only as the clock for the watchdog timer, real-time clock 2, 12-bit interval timer, and the LCD controller/driver. The low-speed on-chip oscillator clock cannot be used as the CPU clock.

The low-speed on-chip oscillator runs while the watchdog timer is operating or when the setting of bit 4 (WUTMMCK0) in the subsystem clock supply mode control register (OSMC) is 1. The low-speed on-chip oscillator is stopped when the watchdog timer is stopped and WUTMMCK0 is set to 0.

5.5 Clock Generator Operation

The clock generator generates the following clocks and controls the operation modes of the CPU, such as standby mode (see **Figure 5-1**).

- Main system clock f_{MAIN}
  - High-speed system clock f_{MX}
    X1 clock f_X
    External main system clock f_{EX}
  - High-speed on-chip oscillator clock f_{IH}
- Subsystem clock f_{SUB}
  - XT1 clock f_{XT}
  - External subsystem clock f_{EXS}
- Low-speed on-chip oscillator clock f_{IL}
- CPU/peripheral hardware clock f_{CLK}

In the RL78/L13, the CPU starts operating when the high-speed on-chip oscillator starts generating the clock after reset release .

The clock generator operation after the power supply voltage is turned on is shown in Figure 5-15.

Figure 5-15. Clock Generator Operation When Power Supply Voltage Is Turned On

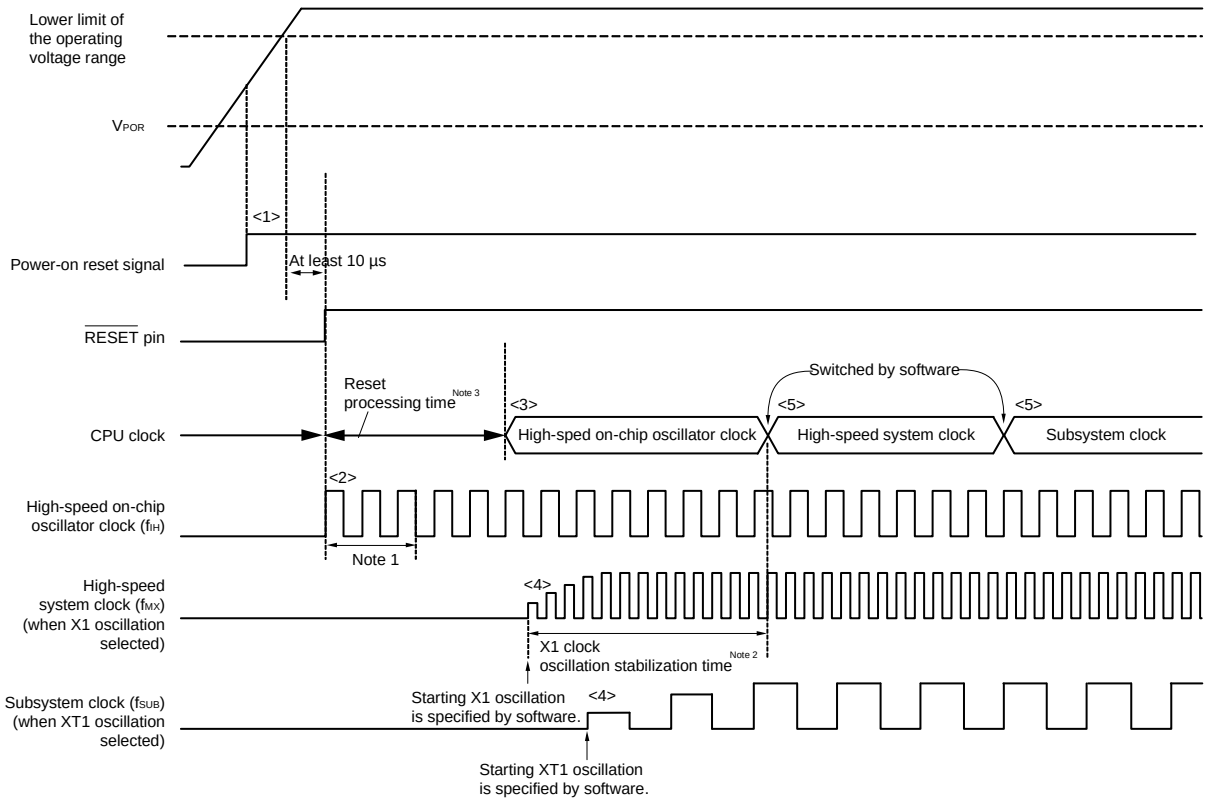

<1> When the power is turned on, an internal reset signal is generated by the power-on-reset (POR) circuit. Note that the reset state is maintained after a reset by the voltage detector or an external reset until the voltage reaches the range of operating voltage described in **32.4 AC Characteristics** and **33.4 AC Characteristics** (the above figure is an example when the external reset is in use).

<2> When the reset is released, the high-speed on-chip oscillator automatically starts oscillation.

<3> The CPU starts operation on the high-speed on-chip oscillator clock after waiting for the voltage to stabilize and a reset processing have been performed after reset release.

<4> Set the start of oscillation of the X1 or XT1 clock via software (see **5.6.2 Example of setting X1 oscillation clock** and **5.6.3 Example of setting XT1 oscillation clock**).

<5> When switching the CPU clock to the X1 or XT1 clock, wait for the clock oscillation to stabilize, and then set switching via software (see **5.6.2 Example of setting X1 oscillation clock** and **5.6.3 Example of setting XT1 oscillation clock**).

Notes 1. The reset processing time includes the oscillation accuracy stabilization time of the high-speed on-chip oscillator clock.

2. When releasing a reset, confirm the oscillation stabilization time for the X1 clock using the oscillation stabilization time counter status register (OSTC).

3. For the reset processing time, see **CHAPTER 23 POWER-ON-RESET CIRCUIT.**

Caution It is not necessary to wait for the oscillation stabilization time when an external clock input from the EXCLK pin is used.

5.6 Controlling Clock

5.6.1 Example of setting high-speed on-chip oscillator

After reset release, the high-speed on-chip oscillator clock is used as the CPU/peripheral hardware clock (f_{CLK}). The frequency of the high-speed on-chip oscillator can be selected from 48, 24, 16, 12, 8, 6, 4, 3, 2, and 1 MHz by using FRQSEL0 to FRQSEL4 of the option byte (000C2H). The frequency can also be changed by the high-speed on-chip oscillator frequency select register (HOCODIV).

[Option byte setting]

Address: 000C2H

Option byte (000C2H)	7	6	5	4	3	2	1	0
	CMODE1	CMODE0		FRQSEL4	FRQSEL3	FRQSEL2	FRQSEL1	FRQSEL0
	0/1	0/1	1	0/1	0/1	0/1	0/1	0/1

CMODE1	CMODE0	Setting of flash operation mode	
0	0	LV (low voltage main) mode	V_{DD} = 1.6 V to 5.5 V @ 1 MHz to 4 MHz
1	0	LS (low speed main) mode	V_{DD} = 1.8 V to 5.5 V @ 1 MHz to 8 MHz
1	1	HS (high speed main) mode	V_{DD} = 2.4 V to 5.5 V @ 1 MHz to 16 MHz V_{DD} = 2.7 V to 5.5 V @ 1 MHz to 24 MHz
Other than above		Setting prohibited	

FRQSEL4	FRQSEL3	FRQSEL2	FRQSEL1	FRQSEL0	Frequency of the high-speed on-chip oscillator	
					f_{HOCO}	f_{IH}
1	0	0	0	0	48 MHz	24 MHz
0	0	0	0	0	24 MHz	24 MHz
0	1	0	0	1	16 MHz	16 MHz
0	0	0	0	1	12 MHz	12 MHz
0	1	0	1	0	8 MHz	8 MHz
0	0	0	1	0	6 MHz	6 MHz
0	1	0	1	1	4 MHz	4 MHz
0	0	0	1	1	3 MHz	3 MHz
0	1	1	0	0	2 MHz	2 MHz
0	1	1	0	1	1 MHz	1 MHz
Other than above					Setting prohibited	

[High-speed on-chip oscillator frequency select register (HOCODIV) setting]

Address: F00A8H

	7	6	5	4	3	2	1	0
HOCODIV	0	0	0	0	0	HOCODIV2	HOCODIV1	HOCODIV0

HOCODIV2	HOCODIV1	HOCODIV0	Selection of high-speed on-chip oscillator clock frequency		
			FRQSEL4 = 0		FRQSEL4 = 1
			FRQSEL3 = 0	FRQSEL3 = 1	FRQSEL3 = 0
0	0	0	f_{IH} = 24 MHz	Setting prohibited	f_{IH} = 24 MHz f_{HOCO} = 48 MHz
0	0	1	f_{IH} = 12 MHz	f_{IH} = 16 MHz	f_{IH} = 12 MHz f_{HOCO} = 24 MHz
0	1	0	f_{IH} = 6 MHz	f_{IH} = 8 MHz	f_{IH} = 6 MHz f_{HOCO} = 12 MHz
0	1	1	f_{IH} = 3 MHz	f_{IH} = 4 MHz	f_{IH} = 3 MHz f_{HOCO} = 6 MHz
1	0	0	Setting prohibited	f_{IH} = 2 MHz	Setting prohibited
1	0	1	Setting prohibited	f_{IH} = 1 MHz	Setting prohibited
Other than above			Setting prohibited		

5.6.2 Example of setting X1 oscillation clock

After reset release, the high-speed on-chip oscillator clock is used as the CPU/peripheral hardware clock (f_{CLK}). To change the clock to the X1 oscillation clock, specify the oscillator settings by using the oscillation stabilization time select register (OSTS), clock operation mode control register (CMC), and clock operation status control register (CSC) to start oscillation, and then make sure that oscillation has stabilized by checking the oscillation stabilization time counter status register (OSTC). After the oscillation stabilizes, select the X1 oscillation clock as f_{CLK} by using the system clock control register (CKC).

[Register settings] Set the register according to steps <1> to <5> below.

<1> Set the OSCSEL bit of the CMC register to 1. If f_X is higher than 10 MHz, set the AMPH bit to 1, to start the X1 oscillator.

	7	6	5	4	3	2	1	0
CMC	EXCLK	OSCSEL	EXCLKS	OSCSELS		AMPHS1	AMPHS0	AMPH
	0	1	0	0	0	0	0	0/1

<2> Using the OSTS register, select the oscillation stabilization time of the X1 oscillator after the STOP mode is exited.
Example: Specify as below to wait for oscillation to stabilize for at least 102.4 μs when using a 10 MHz resonator.

	7	6	5	4	3	2	1	0
OSTS						OSTS2	OSTS1	OSTS0
	0	0	0	0	0	0	1	0

<3> Clear the MSTOP bit of the CSC register to 0 to start oscillation of the X1 oscillator.

	7	6	5	4	3	2	1	0
CSC	MSTOP	XTSTOP						HIOSTOP
	0	1	0	0	0	0	0	0

<4> Use the OSTC register to wait for oscillation of the X1 oscillator to stabilize.
Example: Wait until the bits are set to the following values to wait for at least 102.4 μs for oscillation to stabilize when using a 10 MHz resonator.

	7	6	5	4	3	2	1	0
OSTC	MOST8	MOST9	MOST10	MOST11	MOST13	MOST15	MOST17	MOST18
	1	1	1	0	0	0	0	0

<5> Use the MCM0 bit of the CKC register to specify the X1 oscillation clock as the CPU/peripheral hardware clock.

	7	6	5	4	3	2	1	0
CKC	CLS	CSS	MCS	MCM0				
	0	0	0	1	0	0	0	0

Cautions 1. The EXCLKS, OSCSELS, AMPHS1, AMPHS0, and XTSTOP bits are reset only by a power-on reset; they retain the previous values when a reset caused by another factor occurs.

2. Keep the operating voltage within the range that allows operation of the flash memory as set in an option byte (000C2H) before and after changes to the main system clock (f_{MAIN}) by using the system clock control register (CKC).

Option Byte (000C2H) Value		Flash Operation Mode	Operating Frequency Range	Operating Voltage Range
CMODE1	CMODE0			
0	0	LV (low-voltage main) mode	1 MHz to 4 MHz	1.6 V to 5.5 V
1	0	LS (low-speed main) mode	1 MHz to 8 MHz	1.8 V to 5.5 V
1	1	HS (high-speed main) mode	1 MHz to 16 MHz	2.4 V to 5.5 V
			1 MHz to 32 MHz	2.7 V to 5.5 V

5.6.3 Example of setting XT1 oscillation clock

After reset release, the high-speed on-chip oscillator clock is used as the CPU/peripheral hardware clock (f_{CLK}). To change the clock to the XT1 oscillation clock, specify the oscillator settings by using the subsystem clock supply mode control register (OSMC), clock operation mode control register (CMC), and clock operation status control register (CSC) to start oscillation, and then select the XT1 oscillation clock as f_{CLK} by using the system clock control register (CKC).

[Register settings] Set the register according to steps <1> to <5> below.

<1> Set the RTCLPC bit to 1 to run only the real-time clock 2, 12-bit interval timer, and LCD controller/driver on the subsystem clock (for ultra-low current consumption) in the STOP mode or HALT mode during CPU operation on the subsystem clock.

	7	6	5	4	3	2	1	0
OSMC	RTCLPC			WUTMMCK0				
	0/1	0	0	0	0	0	0	0

<2> Set the OSCSELS bit of the CMC register to 1 to operate the XT1 oscillator.

	7	6	5	4	3	2	1	0
CMC	EXCLK	OSCSEL	EXCLKS	OSCSELS		AMPHS1	AMPHS0	AMPH
	0	0	0	1	0	0/1	0/1	0

AMPHS0 and AMPHS1 bits: Use these bits to specify the oscillation mode of the XT1 oscillator.

<3> Clear the XTSTOP bit of the CSC register to 0 to start oscillation of the XT1 oscillator.

	7	6	5	4	3	2	1	0
CSC	MSTOP	XTSTOP						HIOSTOP
	1	0	0	0	0	0	0	0

<4> Use features such as the timer to wait for oscillation of the subsystem clock to stabilize by using software.

<5> Use the CSS bit of the CKC register to specify the XT1 oscillation clock as the CPU/peripheral hardware clock.

	7	6	5	4	3	2	1	0
CKC	CLS	CSS	MCS	MCM0				
	0	1	0	0	0	0	0	0

Caution The EXCLKS, OSCSELS, AMPHS1, AMPHS0, and XTSTOP bits are reset only by a power-on reset; they retain the previous values when a reset caused by another factor occurs.

5.6.4 CPU clock status transition diagram

Figure 5-16 shows the CPU clock status transition diagram of this product.

Figure 5-16. CPU Clock Status Transition

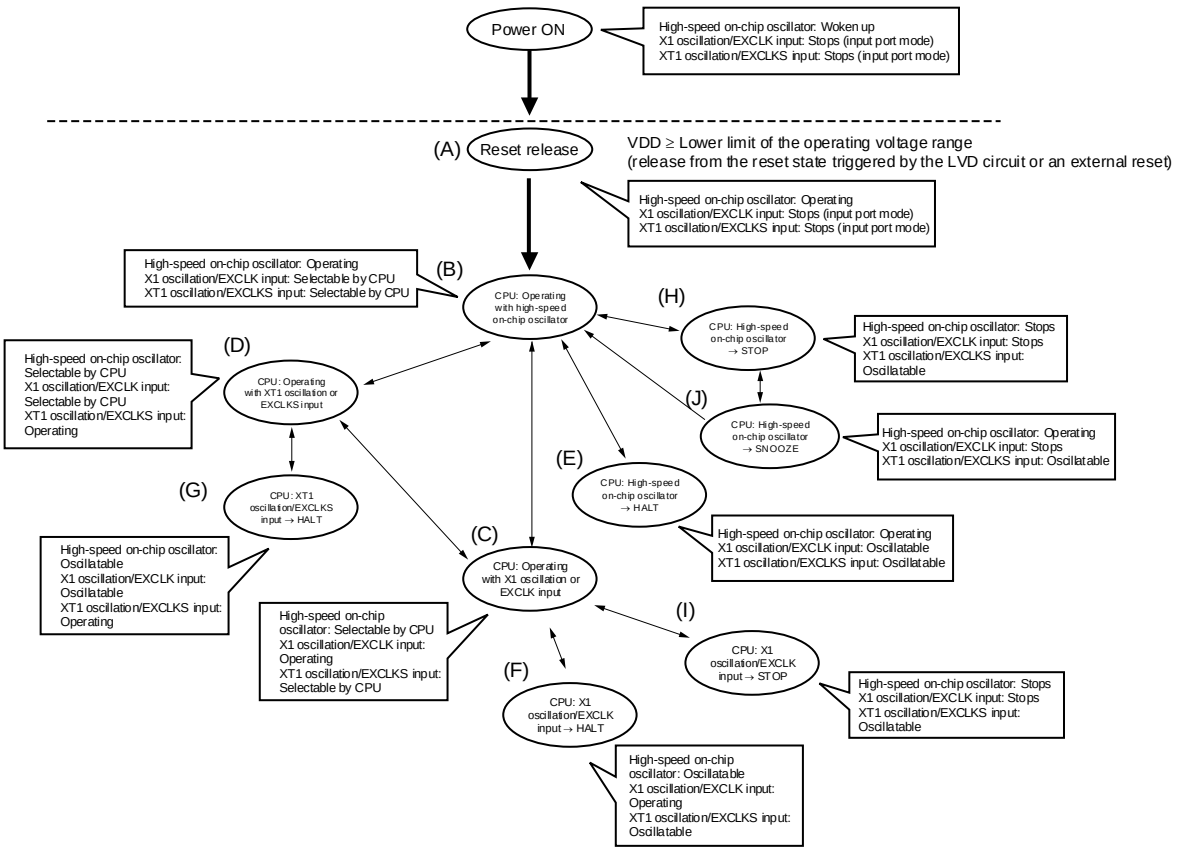

Table 5-3 shows transition of the CPU clock and examples of setting the special function registers (SFRs).

Table 5-3. CPU Clock Transition and SFR Setting Examples (1/5)

(1) CPU operating on high-speed on-chip oscillator clock (B) after reset release (A)

Status Transition	SFR Setting
(A) → (B)	SFR setting not required (SFRs are in the default status after reset release).

(2) CPU operating on high-speed system clock (C) after reset release (A)

(The CPU operates on the high-speed on-chip oscillator clock immediately after reset release (B).)

(SFR setting sequence) →

SFR Flag to Set / Status Transition	CMC Register[Note 1]			OSTS Register	CSC Register	OSTC Register	CKC Register
	EXCLK	OSCSEL	AMPH		MSTOP		MCM0
(A) → (B) → (C) (X1 clock: 1 MHz ≤ f_X ≤ 10 MHz)	0	1	0	**Note 2**	0	Must be checked	1
(A) → (B) → (C) (X1 clock: 10 MHz < f_X ≤ 20 MHz)	0	1	1	**Note 2**	0	Must be checked	1
(A) → (B) → (C) (external main clock)	1	1	×	**Note 2**	0	Not need to be checked	1

Notes 1. The clock operation mode control register (CMC) can be written only once by an 8-bit memory manipulation instruction after reset release.

2. Set the oscillation stabilization time as follows.

- Desired oscillation stabilization time indicated by the oscillation stabilization time counter status register (OSTC) ≤ Oscillation stabilization time set by the oscillation stabilization time select register (OSTS)

Caution Specify the clock after the supply voltage has reached the operable voltage of the clock to be specified (see CHAPTER 32 ELECTRICAL SPECIFICATIONS (T_A = –40 to +85°C) and CHAPTER 33 ELECTRICAL SPECIFICATIONS (T_A = –40 to +105°C)).

(3) CPU operating on subsystem clock (D) after reset release (A)

(The CPU operates on the high-speed on-chip oscillator clock immediately after reset release (B).)

(SFR setting sequence) →

SFR Flag to Set / Status Transition	CMC Register[Note]				CSC Register	Waiting for Oscillation Stabilization	CKC Register
	EXCLKS	OSCSELS	AMPHS1	AMPHS0	XTSTOP		CSS
(A) → (B) → (D) (XT1 clock)	0	1	0/1	0/1	0	Necessary	1
(A) → (B) → (D) (external subsystem clock)	1	1	×	×	0	Necessary	1

Note The clock operation mode control register (CMC) can be written only once by an 8-bit memory manipulation instruction after reset release.

Remarks 1. ×: don't care

2. (A) to (J) in Table 5-3 correspond to (A) to (J) in Figure 5-16.

Table 5-3. CPU Clock Transition and SFR Setting Examples (2/5)

(4) Changing CPU clock from high-speed on-chip oscillator clock (B) to high-speed system clock (C)

(SFR setting sequence) →

SFR Flag to Set / Status Transition	CMC Register[Note 1]			OSTS Register	CSC Register	OSTC Register	CKC Register
	EXCLK	OSCSEL	AMPH		MSTOP		MCM0
(B) → (C) (X1 clock: 1 MHz ≤ f_X ≤ 10 MHz)	0	1	0	**Note 2**	0	Must be checked	1
(B) → (C) (X1 clock: 10 MHz < f_X ≤ 20 MHz)	0	1	1	**Note 2**	0	Must be checked	1
(B) → (C) (external main clock)	1	1	×	**Note 2**	0	Not need to be checked	1

Setting unnecessary if these bits are already set

Setting unnecessary if the CPU is operating on the high-speed system clock

Notes 1. The clock operation mode control register (CMC) can be changed only once after reset release. This setting is not necessary if it has already been set.

2. Set the oscillation stabilization time as follows.

- Desired oscillation stabilization time indicated by the oscillation stabilization time counter status register (OSTC) ≤ Oscillation stabilization time set by the oscillation stabilization time select register (OSTS)

Caution Specify the clock after the supply voltage has reached the operable voltage of the clock to be specified (see CHAPTER 32 ELECTRICAL SPECIFICATIONS (T_A = –40 to +85°C) and CHAPTER 33 ELECTRICAL SPECIFICATIONS (T_A = –40 to +105°C)).

(5) CPU clock changing from high-speed on-chip oscillator clock (B) to subsystem clock (D)

(Setting sequence of SFR registers) →

Setting Flag of SFR Register / Status Transition	CMC Register[Note]			CSC Register	Waiting for Oscillation Stabilization	CKC Register
	EXCLKS	OSCSELS	AMPHS1,0	XTSTOP		CSS
(B) → (D) (XT1 clock)	0	1	00: Low power consumption oscillation 01: Normal oscillation 10: Ultra-low power consumption oscillation	0	Necessary	1
(B) → (D) (external sub clock)	1	1	×	0	Necessary	1

Unnecessary if these registers are already set

Unnecessary if the CPU is operating with the subsystem clock

Note The clock operation mode control register (CMC) can be written only once by an 8-bit memory manipulation instruction after reset release. This setting is not necessary if it has already been set.

Remarks 1. ×: don't care

2. (A) to (J) in Table 5-3 correspond to (A) to (J) in Figure 5-16.

Table 5-3. CPU Clock Transition and SFR Setting Examples (3/5)

(6) Changing CPU clock from high-speed system clock (C) to high-speed on-chip oscillator clock (B)

(SFR setting sequence) →

Status Transition \ SFR Flag to Set	CSC Register	Oscillation Accuracy Stabilization Time	CKC Register
	HIOSTOP		MCM0
(C) → (B)	0	**Note**	0

Setting unnecessary if the CPU is operating on the high-speed on-chip oscillator clock

Note When FRQSEL4 = 0: 18 to 65 μs
When FRQSEL4 = 1: 18 to 135 μs

(7) Changing CPU clock from high-speed system clock (C) to subsystem clock (D)

(SFR setting sequence) →

Status Transition \ SFR Flag to Set	CSC Register	Waiting for Oscillation Stabilization	CKC Register
	XTSTOP		CSS
(C) → (D)	0	Necessary	1

Setting unnecessary if the CPU is operating on the subsystem clock

(8) Changing CPU clock from subsystem clock (D) to high-speed on-chip oscillator clock (B)

(Setting sequence of SFRs)

Status Transition \ Setting Flag of SFR	CSC Register	Oscillation Accuracy Stabilization Time	CKC Register	
	HIOSTOP		CSS	MCM0
(D) → (B)	0	**Note**	0	0

Setting unnecessary if the CPU is operating on the high-speed on-chip oscillator clock

Setting unnecessary if this bit is already set

Note When FRQSEL4 = 0: 18 to 65 μs
When FRQSEL4 = 1: 18 to 135 μs

Remarks 1. (A) to (J) in Table 5-3 correspond to (A) to (J) in Figure 5-16.

2. The oscillation accuracy stabilization time changes according to the temperature conditions and the STOP mode period.

Table 5-3. CPU Clock Transition and SFR Setting Examples (4/5)

(9) CPU clock changing from subsystem clock (D) to high-speed system clock (C)

(Setting sequence of SFR registers) →

Setting Flag of SFR Register / Status Transition	OSTS Register	CSC Register	OSTC Register	CKC Register
		MSTOP		CSS
(D) → (C) (X1 clock: 1 MHz ≤ f_X ≤ 10 MHz)	**Note**	0	Must be checked	0
(D) → (C) (X1 clock: 10 MHz < f_X ≤ 20 MHz)	**Note**	0	Must be checked	0
(D) → (C) (external main clock)	**Note**	0	Must not be checked	0

Unnecessary if the CPU is operating with the high-speed system clock

Note Set the oscillation stabilization time as follows.

- Desired oscillation stabilization time indicated by the oscillation stabilization time counter status register (OSTC) ≤ Oscillation stabilization time set by the oscillation stabilization time select register (OSTS)

Caution Specify the clock after the supply voltage has reached the operable voltage of the clock to be specified (see CHAPTER 32 ELECTRICAL SPECIFICATIONS (T_A = –40 to +85°C) and CHAPTER 33 ELECTRICAL SPECIFICATIONS (T_A = –40 to +105°C)).

(10) ● HALT mode (E) entered while CPU is operating on high-speed on-chip oscillator clock (B)
● HALT mode (F) entered while CPU is operating on high-speed system clock (C)
● HALT mode (G) entered while CPU is operating on subsystem clock (D)

Status Transition	Setting
(B) → (E) (C) → (F) (D) → (G)	Execute HALT instruction

Remark (A) to (J) in Table 5-3 correspond to (A) to (J) in Figure 5-16.

Table 5-3. CPU Clock Transition and SFR Setting Examples (5/5)

(11) ● **STOP mode (H) entered while CPU is operating on high-speed on-chip oscillator clock (B)**
● **STOP mode (I) entered while CPU is operating on high-speed system clock (C)**

(Setting sequence) →

Status Transition		Setting		
(B) → (H)		Stopping peripheral functions that are disabled in STOP mode	–	Execute the STOP instruction.
(C) → (I)	X1 oscillation clock		Set up the OSTS register.	
	External main system clock		–	

(12) Changing CPU operating mode from STOP mode (H) to SNOOZE mode (J)

For details about the setting for switching from the STOP mode to the SNOOZE mode, see **12.8 SNOOZE Mode Function**, **14.5.7 SNOOZE mode function**, and **14.6.3 SNOOZE mode function**.

Remark (A) to (J) in Table 5-3 correspond to (A) to (J) in Figure 5-16.

5.6.5 Conditions before changing the CPU clock and processing after changing CPU clock

The conditions before changing the CPU clock and processing after changing the CPU clock are shown below.

Table 5-4. Changing CPU Clock (1/2)

CPU Clock		Conditions Before Change	Processing After Change
Before Change	After Change		
High-speed on-chip oscillator clock	X1 clock	X1 oscillation is stable ● OSCSEL = 1, EXCLK = 0, MSTOP = 0 ● The oscillation stabilization time has elapsed	The operating current can be reduced by stopping the high-speed on-chip oscillator (HIOSTOP = 1) after checking that the CPU clock is changed.
	External main system clock	Inputting the external clock from the EXCLK pin is enabled ● OSCSEL = 1, EXCLK = 1, MSTOP = 0	
	XT1 clock	XT1 oscillation is stable ● OSCSELS = 1, EXCLKS = 0, XTSTOP = 0	
	External subsystem clock	Inputting the external clock from the EXCLKS pin is enabled ● OSCSELS = 1, EXCLKS = 1, XTSTOP = 0	
X1 clock	High-speed on-chip oscillator clock	Enabling oscillation of high-speed on-chip oscillator ● HIOSTOP = 0 ● The oscillation accuracy stabilization time has elapsed	X1 oscillation can be stopped (MSTOP = 1) after checking that the CPU clock is changed.
	External main system clock	Transition impossible	–
	XT1 clock	XT1 oscillation is stable ● OSCSELS = 1, EXCLKS = 0, XTSTOP = 0 ● The oscillation stabilization time has elapsed	X1 oscillation can be stopped (MSTOP = 1) after checking that the CPU clock is changed.
	External subsystem clock	Inputting the external clock from the EXCLKS pin is enabled ● OSCSELS = 1, EXCLKS = 1, XTSTOP = 0	X1 oscillation can be stopped (MSTOP = 1) after checking that the CPU clock is changed.
External main system clock	High-speed on-chip oscillator clock	Enabling oscillation of high-speed on-chip oscillator ● HIOSTOP = 0 ● The oscillation accuracy stabilization time has elapsed	Inputting the external main system clock can be disabled (MSTOP = 1).
	X1 clock	Transition impossible	–
	XT1 clock	XT1 oscillation is stable ● OSCSELS = 1, EXCLKS = 0, XTSTOP = 0 ● The oscillation stabilization time has elapsed	Inputting the external main system clock can be disabled (MSTOP = 1).
	External subsystem clock	Inputting the external clock from the EXCLKS pin is enabled ● OSCSELS = 1, EXCLKS = 1, XTSTOP = 0	Inputting the external main system clock can be disabled (MSTOP = 1).

Table 5-4. Changing CPU Clock (2/2)

CPU Clock		Condition Before Change	Processing After Change
Before Change	After Change		
XT1 clock	High-speed on-chip oscillator clock	The high-speed on-chip oscillator is oscillating and the high-speed on-chip oscillator clock is selected as the main system clock ● HIOSTOP = 0, MCS = 0	XT1 oscillation can be stopped (XTSTOP = 1)
	X1 clock	X1 oscillation is stable and the high-speed system clock is selected as the main system clock ● OSCSEL = 1, EXCLK = 0, MSTOP = 0 ● The oscillation stabilization time has elapsed ● MCS = 1	
	External main system clock	Inputting the external clock from the EXCLK pin is enabled and the high-speed system clock is selected as the main system clock ● OSCSEL = 1, EXCLK = 1, MSTOP = 0 ● MCS = 1	
	External subsystem clock	Transition impossible	–
External subsystem clock	High-speed on-chip oscillator clock	The high-speed on-chip oscillator is oscillating and the high-speed on-chip oscillator clock is selected as the main system clock ● HIOSTOP = 0, MCS = 0	Inputting external subsystem clock can be disabled (XTSTOP = 1).
	X1 clock	X1 oscillation is stable and the high-speed system clock is selected as the main system clock ● OSCSEL = 1, EXCLK = 0, MSTOP = 0 ● The oscillation stabilization time has elapsed ● MCS = 1	
	External main system clock	Inputting the external clock from the EXCLK pin is enabled and the high-speed system clock is selected as the main system clock ● OSCSEL = 1, EXCLK = 1, MSTOP = 0 ● MCS = 1	
	XT1 clock	Transition impossible	–

5.6.6 Time required for switching CPU clock and system clock

By setting bits 4 and 6 (MCM0, CSS) of the system clock control register (CKC), the CPU clock can be switched between the main system clock and the subsystem clock, and main system clock can be switched between the high-speed on-chip oscillator clock and the high-speed system clock.

The clock is not switched immediately after rewriting the CKC register; operation continues on the clock before the change for several clock cycles (see **Tables 5-5** to **5-7**).

Whether the CPU is operating on the main system clock or the subsystem clock can be checked by using bit 7 (CLS) of the CKC register. Whether the main system clock is operating on the high-speed system clock or high-speed on-chip oscillator clock can be checked by using bit 5 (MCS) of the CKC register.

When the CPU clock is switched, the peripheral hardware clock is also switched.

Table 5-5. Maximum Time Required for System Clock Switchover

Clock A	Switching Directions	Clock B	Remark
f_{IH}	↔	f_{MX}	See **Table 5-6**.
f_{MAIN}	↔	f_{SUB}	See **Table 5-7**.

Table 5-6. Maximum Number of Clock Cycles Required for Switching Between f_{IH} and f_{MX}

Value Before Switchover		Value After Switchover	
MCM0		MCM0	
		0 ($f_{MAIN} = f_{IH}$)	1 ($f_{MAIN} = f_{MX}$)
0 ($f_{MAIN} = f_{IH}$)	$f_{MX} \geq f_{IH}$		2 clock cycles
	$f_{MX} < f_{IH}$		2 f_{IH}/f_{MX} clock cycles
1 ($f_{MAIN} = f_{MX}$)	$f_{MX} \geq f_{IH}$	2 f_{MX}/f_{IH} clock cycles	
	$f_{MX} < f_{IH}$	2 clock cycles	

Table 5-7. Maximum Number of Clocks Required for Switching Between f_{MAIN} and f_{SUB}

Value Before Switchover	Value After Switchover	
CSS	CSS	
	0 ($f_{CLK} = f_{MAIN}$)	1 ($f_{CLK} = f_{SUB}$)
0 ($f_{CLK} = f_{MAIN}$)		1 + 2 f_{MAIN}/f_{SUB} clock cycles
1 ($f_{CLK} = f_{SUB}$)	3 clock cycles	

Remarks 1. The number of clock cycles in Table 5-6 and Table 5-7 is the number of CPU clock cycles before switchover.

2. Calculate the number of clock cycles in Table 5-6 and Table 5-7, rounding off the decimal values.

Example When switching the main system clock from the high-speed system clock to the high-speed on-chip oscillator clock (when f_{IH} = 8 MHz, f_{MX} = 10 MHz)

2 f_{MX}/f_{IH} cycles = 2 (10/8) = 2.5 → 3 clock cycles

5.6.7 Conditions before stopping clock oscillation

The following lists the register flag settings for stopping the clock oscillation (disabling external clock input) and conditions before the clock oscillation is stopped. Before stopping the clock oscillation, check the conditions before the clock oscillation is stopped.

Table 5-8. Conditions Before Stopping the Clock Oscillation and Flag Settings

Clock	Conditions Before Stopping Clock Oscillation (Disabling External Clock Input)	SFR Flag Settings
High-speed on-chip oscillator clock	MCS = 1 or CLS = 1 (The CPU is operating on a clock other than the high-speed on-chip oscillator clock.)	HIOSTOP = 1
X1 oscillator clock	MCS = 0 or CLS = 1 (The CPU is operating on a clock other than the high-speed system clock.)	MSTOP = 1
External main system clock		
XT1 oscillator clock	CLS = 0 (The CPU is operating on a clock other than the subsystem clock.)	XTSTOP = 1
External subsystem clock		

5.7 Resonator and Oscillator Constants

For the resonators for which the operation has been verified and their oscillation constants (for reference), see the page for the corresponding product at the Renesas Web site (http://www.renesas.com).

Cautions 1. The constants for these oscillator circuits are reference values based on specific environments set up for evaluation by the manufacturers. For actual applications, request evaluation by the manufacturer of the oscillator circuit mounted on a board. Furthermore, if you are switching from a different product to this microcontroller, and whenever you change the board, again request evaluation by the manufacturer of the oscillator circuit mounted on the new board.

2. The oscillation voltage and oscillation frequency only indicate the oscillator characteristic. Use the RL78 microcontroller so that the internal operation conditions are within the specifications of the DC and AC characteristics.

Figure 5-17. External Oscillation Circuit Example

(a) X1 oscillation

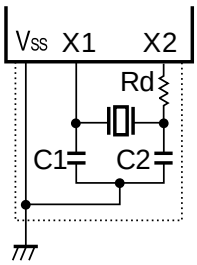

(b) XT1 oscillation

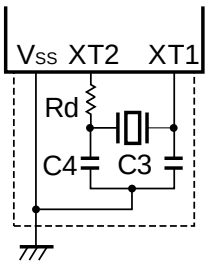

CHAPTER 6 TIMER ARRAY UNIT

Cautions 1. The presence or absence of timer I/O pins depends on the product. See Table 6-2 Timer I/O Pins provided in Each Product for details.

2. Most of the following descriptions in this chapter use the 80-pin as an example.

The timer array unit has eight 16-bit timers.

Each 16-bit timer is called a channel and can be used as an independent timer. In addition, two or more “channels” can be used to create a high-accuracy timer.

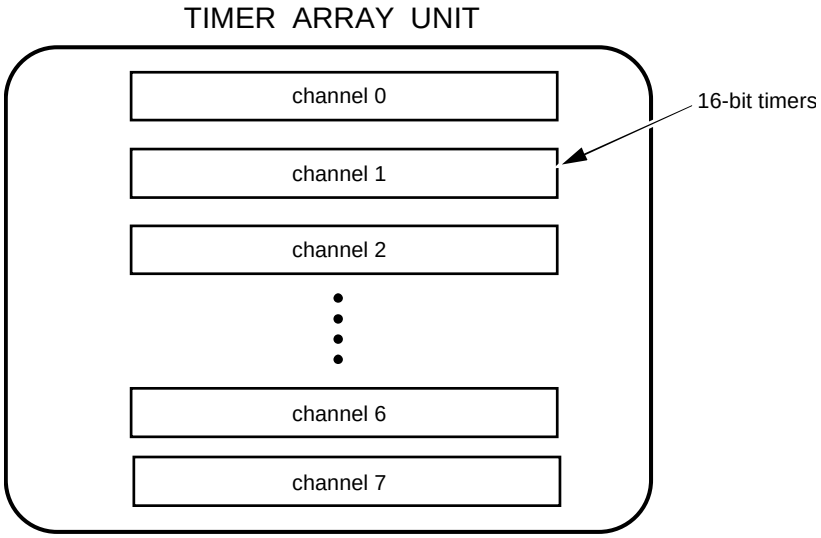

For details about each function, see the table below.

Independent channel operation function	Simultaneous channel operation function
● Interval timer (→ see **6.8.1**) ● Square wave output (→ see **6.8.1**) ● External event counter (→ see **6.8.2**) ● Input pulse interval measurement (→ see **6.8.3**) ● Measurement of high-/low-level width of input signal (→ see **6.8.4**) ● Delay counter (→ see **6.8.5**)	● One-shot pulse output (→ see **6.9.1**) ● PWM output (→ see **6.9.2**) ● Multiple PWM output (→ see **6.9.3**) ● Remote control output function (→ see **6.9.4**)

It is possible to use the 16-bit timer of channels 1 and 3 as two 8-bit timers (higher and lower). The functions that can use channels 1 and 3 as 8-bit timers are as follows:

- Interval timer (higher or lower 8-bit timer)/square wave output (lower 8-bit timer only)
- External event counter (lower 8-bit timer only)
- Delay counter (lower 8-bit timer only)

Channel 7 can be used to realize LIN-bus communication operating in combination with UART0 of the serial array unit.

6.1 Functions of Timer Array Unit

The timer array unit has the following functions.

6.1.1 Independent channel operation function

By operating a channel independently, it can be used for the following purposes without being affected by the operation mode of other channels.

(1) Interval timer

Each timer of a unit can be used as a reference timer that generates an interrupt (INTTMmn) at fixed intervals.

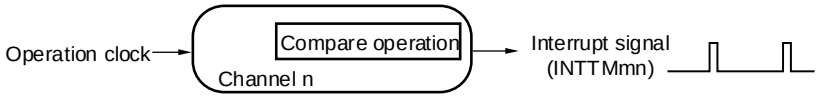

(2) Square wave output

A toggle operation is performed each time INTTMmn interrupt is generated and a square wave with a duty factor of 50% is output from a timer output pin (TOmn).

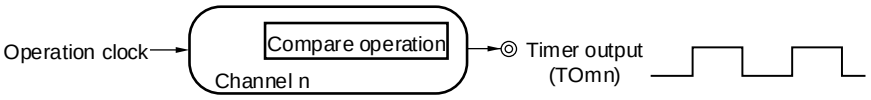

(3) External event counter

Each timer of a unit can be used as an event counter that generates an interrupt when the number of the valid edges of a signal input to the timer input pin (TImn) has reached a specific value.

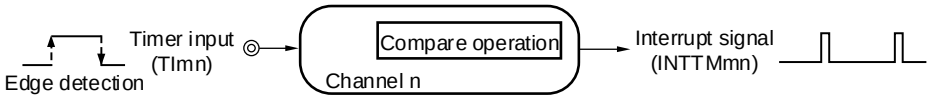

(4) Input pulse interval measurement

Counting is started by the valid edge of a pulse signal input to a timer input pin (TImn). The count value of the timer is captured at the valid edge of the next pulse. In this way, the interval of the input pulse can be measured.

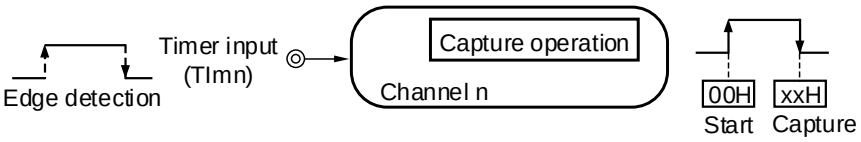

(**Remark** is listed on the next page.)

(5) Measurement of high-/low-level width of input signal

Counting is started by a single edge of the signal input to the timer input pin (TImn), and the count value is captured at the other edge. In this way, the high-level or low-level width of the input signal can be measured.

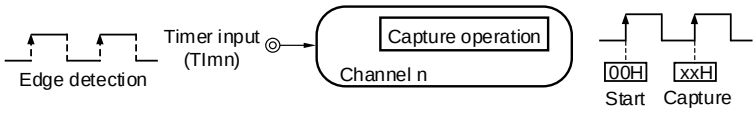

(6) Delay counter

Counting is started at the valid edge of the signal input to the timer input pin (TImn), and an interrupt is generated after any delay period.

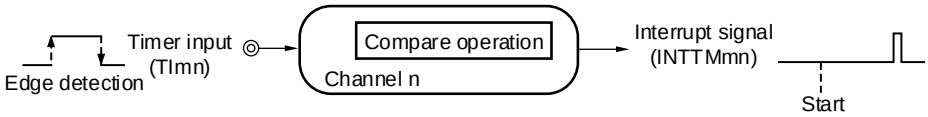

Remark m: Unit number (m = 0), n: Channel number (n = 0 to 7)

6.1.2 Simultaneous channel operation function

By using the combination of a master channel (a reference timer mainly controlling the cycle) and slave channels (timers operating according to the master channel), channels can be used for the following purposes.

(1) One-shot pulse output

Two channels are used as a set to generate a one-shot pulse with a specified output timing and a specified pulse width.

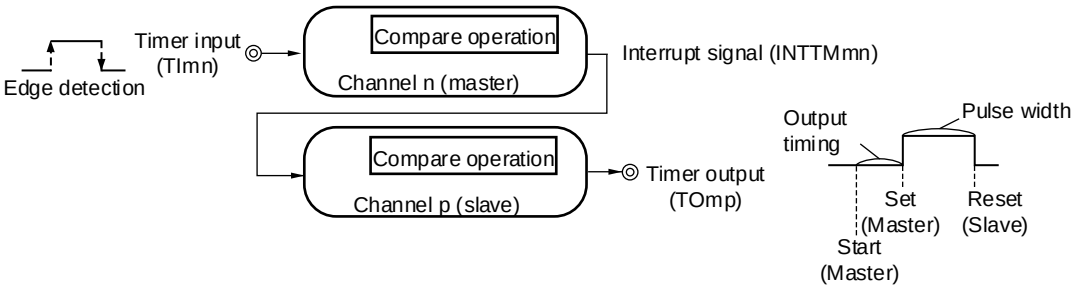

(2) PWM (Pulse Width Modulation) output

Two channels are used as a set to generate a pulse with a specified period and a specified duty factor.

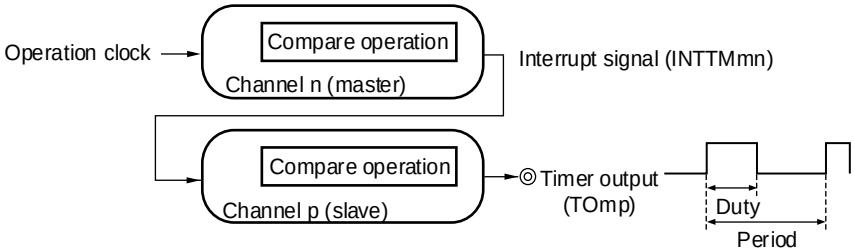

(**Caution** and **Remark** are listed on the next page.)

(3) Multiple PWM (Pulse Width Modulation) output

By extending the PWM function and using one master channel and two or more slave channels, up to seven types of PWM signals that have a specific period and a specified duty factor can be generated.

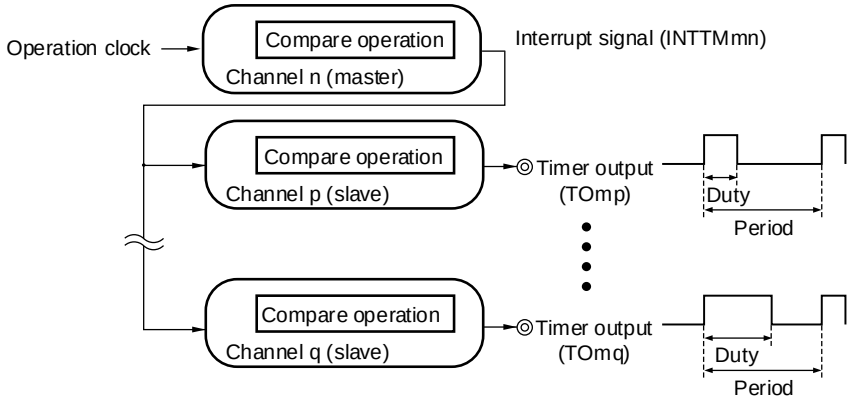

(4) Remote control output function

The pairings of channels 2 and 3 and channels 4 and 5 are used to output the PWM signal. The PWM signal output from channel 3 is used as a mask waves, the PWM signal output from channel 5 is used as a carrier waves, and the logical products of these signals are output as remote control output.

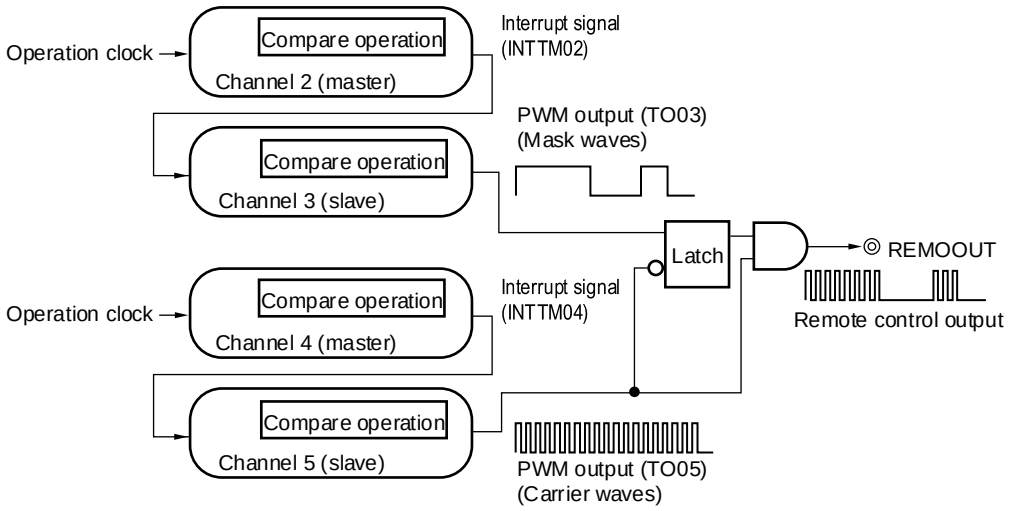

Caution For details about the rules of simultaneous channel operation function, see 6.4.1 Basic rules of simultaneous channel operation function.

Remark m: Unit number (m = 0), n: Channel number (n = 0 to 7),
p, q: Slave channel number (n < p < q ≤ 7)

6.1.3 8-bit timer operation function (channels 1 and 3 only)

The 8-bit timer operation function makes it possible to use a 16-bit timer channel in a configuration consisting of two 8-bit timer channels. This function can only be used for channels 1 and 3.

Caution There are several rules for using 8-bit timer operation function.
For details, see 6.4.2 Basic rules of 8-bit timer operation function (channels 1 and 3 only).

6.1.4 LIN-bus supporting function (channel 7 only)

Timer array unit is used to check whether signals received in LIN-bus communication match the LIN-bus communication format.

(1) Detection of wakeup signal

The timer starts counting at the falling edge of a signal input to the serial data input pin (RxD0) of UART0 and the count value of the timer is captured at the rising edge. In this way, a low-level width can be measured. If the low-level width is greater than a specific value, it is recognized as a wakeup signal.

(2) Detection of break field

The timer starts counting at the falling edge of a signal input to the serial data input pin (RxD0) of UART0 after a wakeup signal is detected, and the count value of the timer is captured at the rising edge. In this way, a low-level width is measured. If the low-level width is greater than a specific value, it is recognized as a break field.

(3) Measurement of pulse width of sync field

After a break field is detected, the low-level width and high-level width of the signal input to the serial data input pin (RxD0) of UART0 are measured. From the bit interval of the sync field measured in this way, a baud rate is calculated.

Remark For details about setting up the operations used to implement the LIN-bus, see **6.3.14 Input switch control register (ISC)** and **6.8.4 Operation as input signal high-/low-level width measurement**.

6.2 Configuration of Timer Array Unit

The timer array unit includes the following hardware.

Table 6-1. Configuration of Timer Array Unit

Item	Configuration
Timer/counter	Timer count register mn (TCRmn)
Register	Timer data register mn (TDRmn)
Timer input	TI00 to TI07[Note 1], RxD0 pin (for LIN-bus)
Timer output	TO00 to TO07[Note 1], output controller
Control registers	<Registers of unit setting block> ● Peripheral enable register 0 (PER0) ● Timer clock select register m (TPSm) ● Timer channel enable status register m (TEm) ● Timer channel start register m (TSm) ● Timer channel stop register m (TTm) ● Timer input select register 0 (TIS0) ● Timer output select register (TOS) ● Timer output enable register m (TOEm) ● Timer output register m (TOm) ● Timer output level register m (TOLm) ● Timer output mode register m (TOMm)
	<Registers of each channel> ● Timer mode register mn (TMRmn) ● Timer status register mn (TSRmn) ● Input switch control register (ISC) ● Noise filter enable register 1 (NFEN1) ● Port mode control register (PMCxx)[Note 2] ● Port mode register (PMxx)[Note 2] ● Port register (Pxx)[Note 2]

Notes 1. The presence or absence of timer I/O pins of channel 0 to 7 depends on the product. See **Table 6-2 Timer I/O Pins provided in Each Product** for details.

2. The port mode control register (PMCxx), port mode registers (PMxx) and port registers (Pxx) to be set differ depending on the product. For details, see **6.3.16 Registers controlling port functions of pins to be used for timer I/O.**

Remark m: Unit number (m = 0), n: Channel number (n = 0 to 7)

The port pins alternatively used as timer I/O pins in each timer array unit channel depend on the product.

Table 6-2. Timer I/O Pins Provided in Each Product

Timer Array Unit Channels	80-pin	64-pin
Channel 0	P52/TI00/TO00 (P40)	
Channel 1	P32/TI01/TO01 (P60)	
Channel 2	P54/TI02/TO02 (P61)	
Channel 3	P30/TI03/TO03/REMOOUT (P127)	
Channel 4	P14/TI04/TO04 (P126)	
Channel 5	P42/TI05/TO05 (P01)	
Channel 6	P56/TI06/TO06 (P125)	P125/TI06/TO06
Channel 7	P15/TI07/TO07 (P41)	P15/TI07/TO07

Remarks 1. Because timer input and timer output are shared by the same pin, either only timer input or only timer output can be used.

2. Pins in the parentheses indicate an alternate port when the bit 0 of the peripheral I/O redirection register (PIOR) is set to “1”.

Figures 6-1 to 6-6 show block diagrams of the timer array unit.

Figure 6-1. Entire Configuration of Timer Array Unit

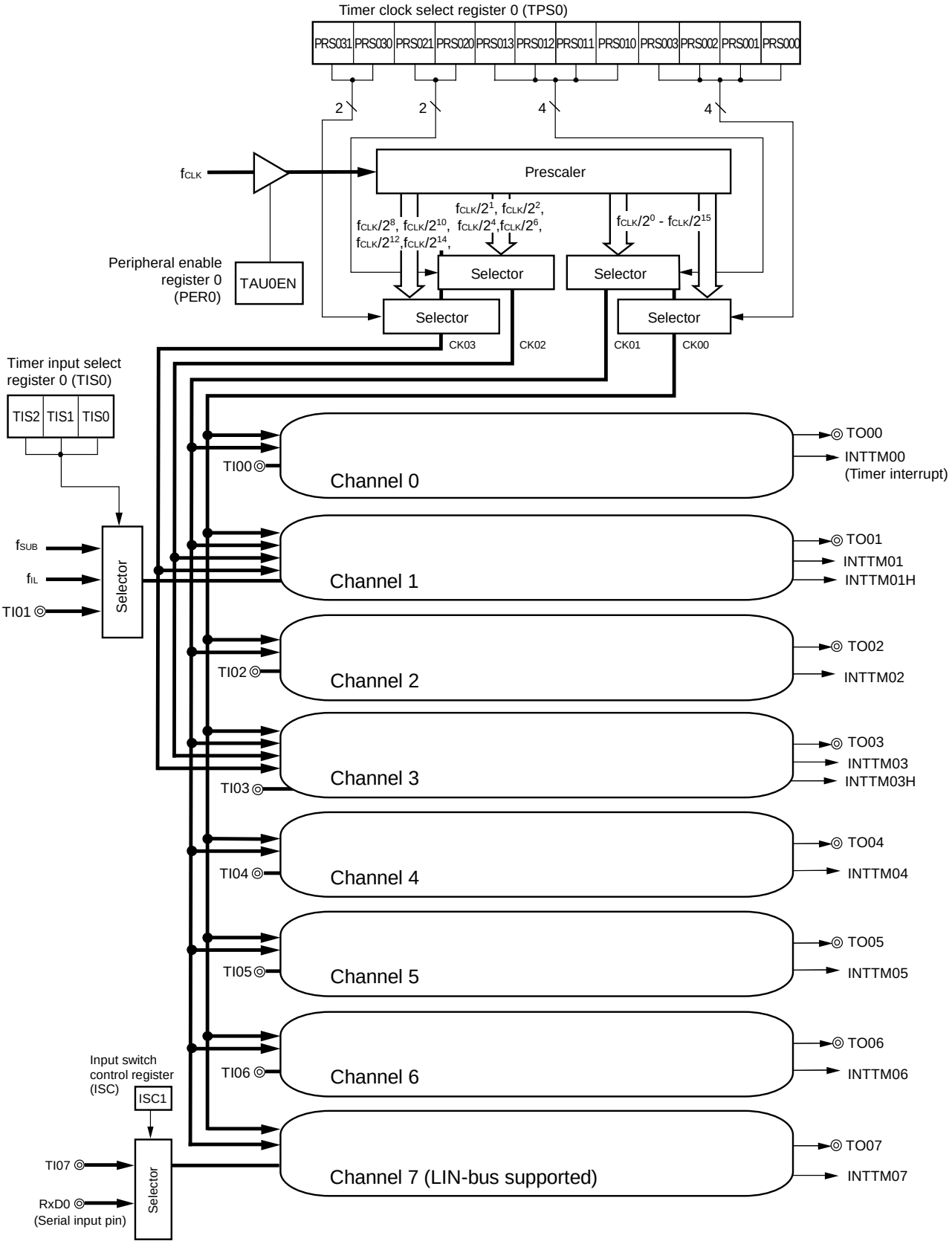

Remark f_{SUB}: Subsystem clock frequency

f_{IL}: Low-speed on-chip oscillator clock frequency

Figure 6-2. Internal Block Diagram of Channels 0, 2, 4, 6 of Timer Array Unit

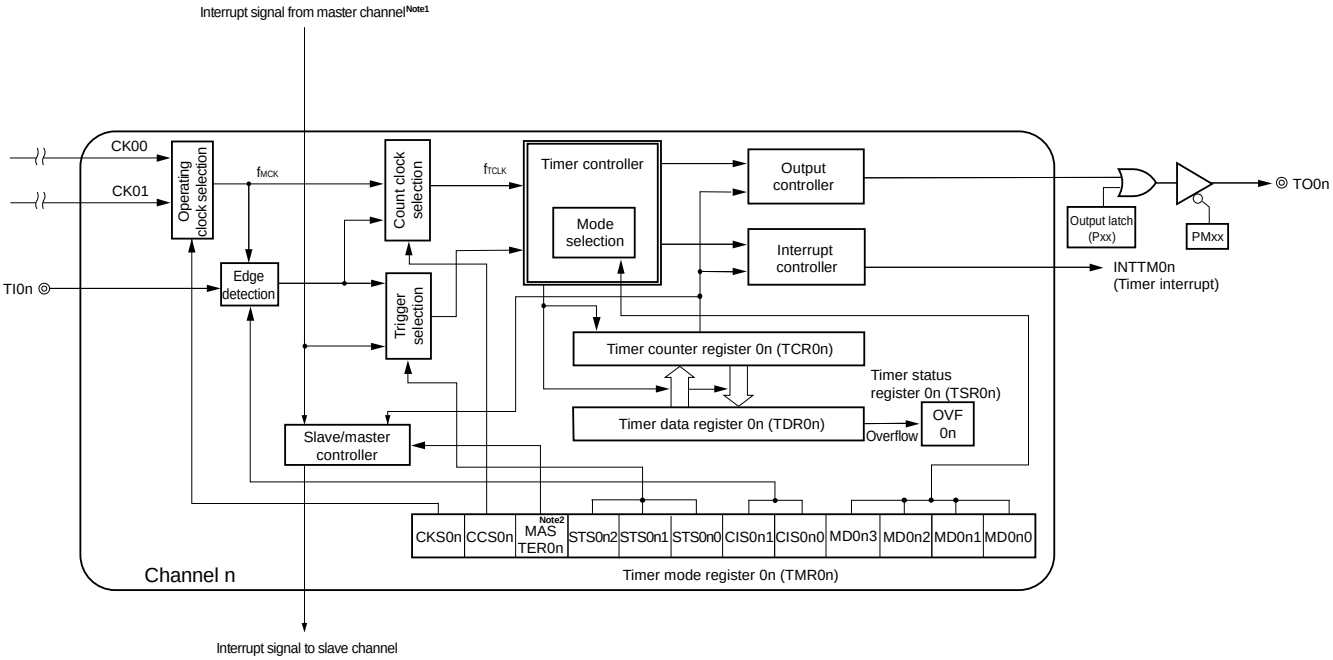

Notes 1. Channels 2, 4, and 6 only
2. n = 2, 4, 6 only

Remark n = 0, 2, 4, 6

Figure 6-3. Internal Block Diagram of Channels 1 of Timer Array Unit

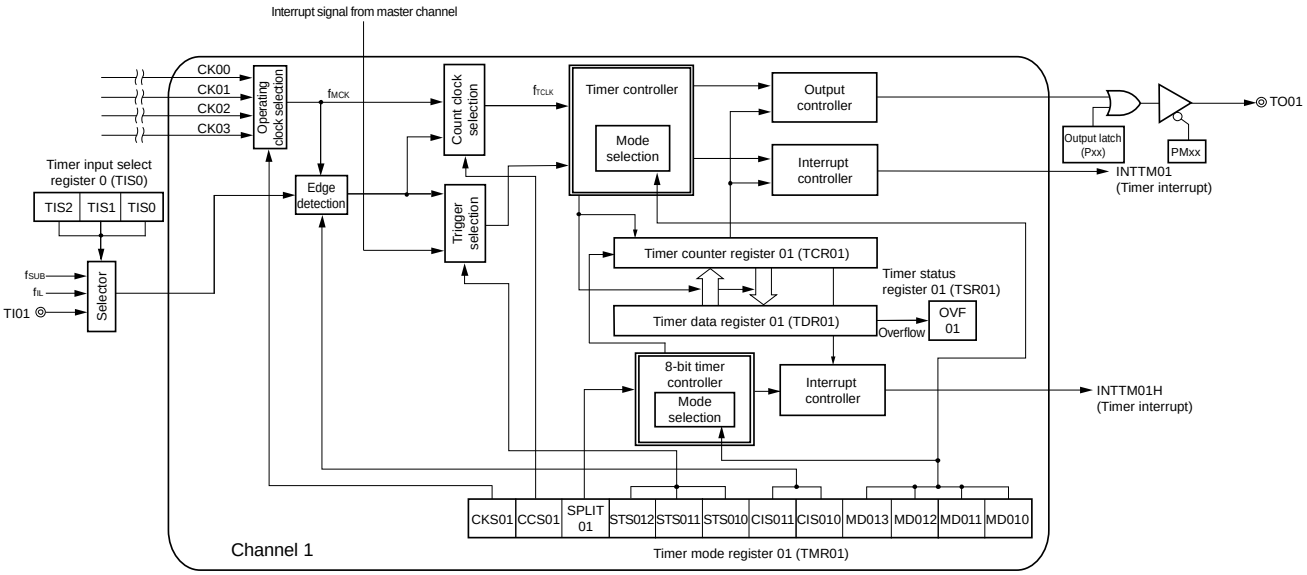

Figure 6-4. Internal Block Diagram of Channels 3 of Timer Array Unit

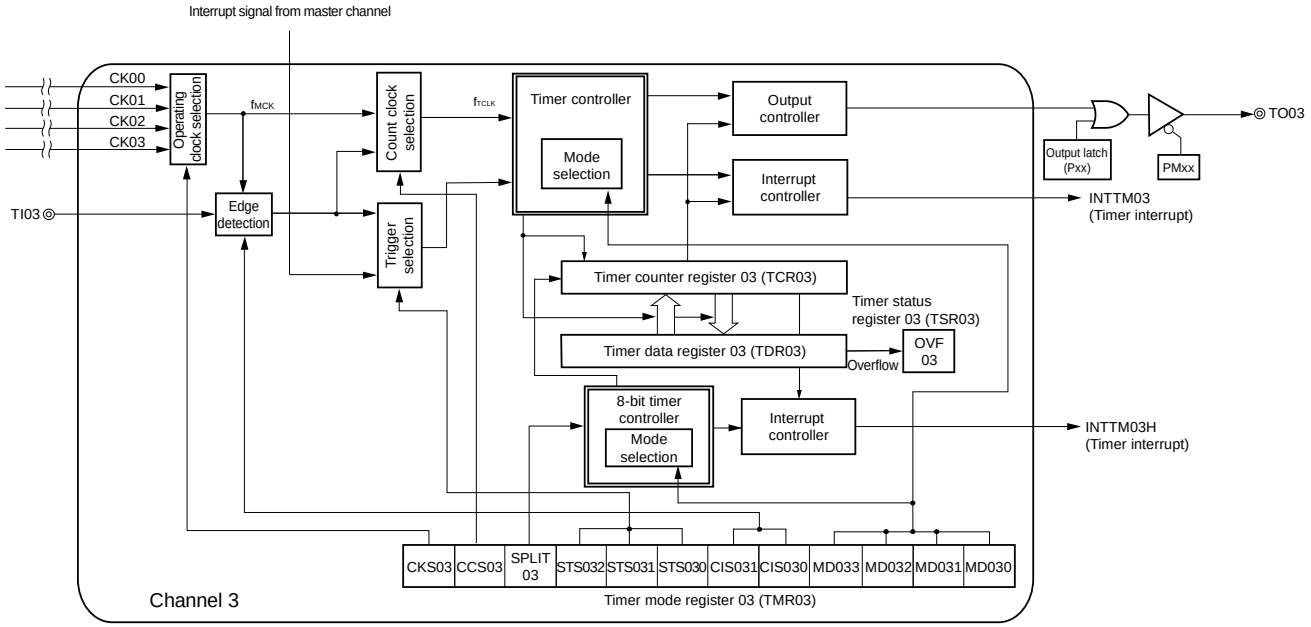

Figure 6-5. Internal Block Diagram of Channels 5 of Timer Array Unit

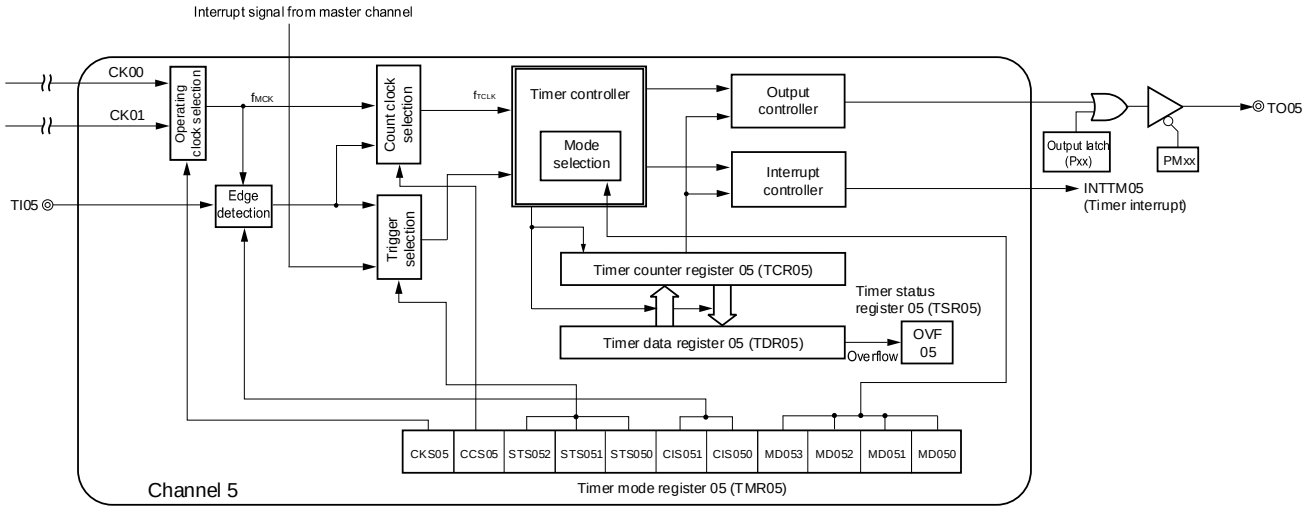

Figure 6-6. Internal Block Diagram of Channels 7 of Timer Array Unit

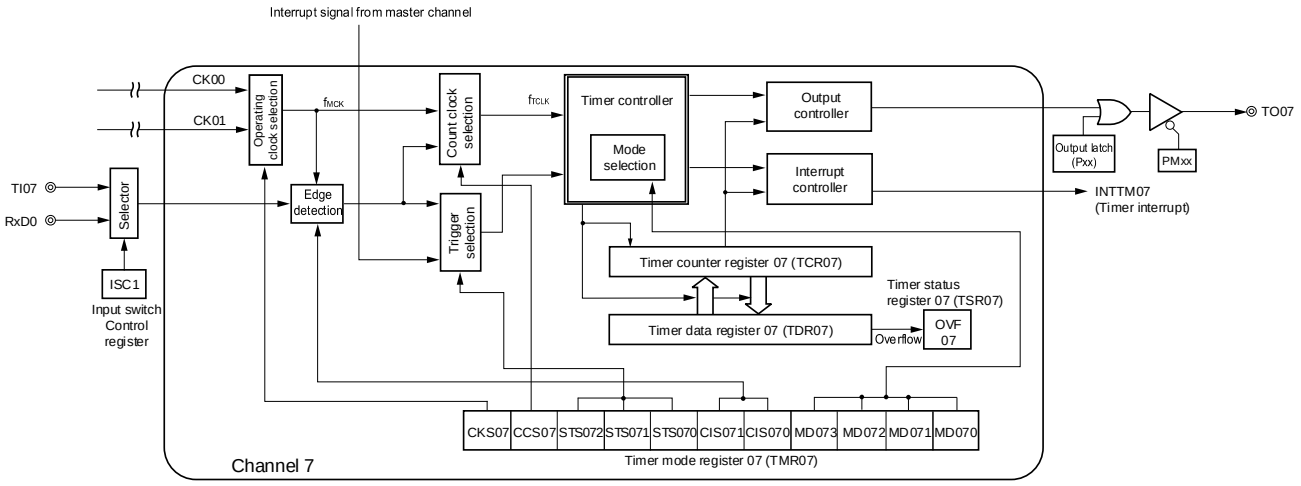

6.2.1 Timer count register mn (TCRmn)

The TCRmn register is a 16-bit read-only register and is used to count clocks.

The value of this counter is incremented or decremented in synchronization with the rising edge of a count clock.

Whether the counter is incremented or decremented depends on the operation mode that is selected by the MDmn3 to MDmn0 bits of timer mode register mn (TMRmn) (see **6.3.3 Timer mode register mn (TMRmn)**).

Figure 6-7. Format of Timer Count Register mn (TCRmn)

Address: F0180H, F0181H (TCR00) to F018EH, F018FH (TCR07) After reset: FFFFH R

	F0181H (TCR00)								F0180H (TCR00)							
	15	14	13	12	11	10	9	8	7	6	5	4	3	2	1	0
TCRmn																

Remark m: Unit number (m = 0), n: Channel number (n = 0 to 7)

The count value can be read by reading timer count register mn (TCRmn).

The count value is set to FFFFH in the following cases.

- When the reset signal is generated
- When the TAUmEN bit of peripheral enable register 0 (PER0) is cleared
- When counting of the slave channel has been completed in the PWM output mode
- When counting of the slave channel has been completed in the delay count mode
- When counting of the master/slave channel has been completed in the one-shot pulse output mode
- When counting of the slave channel has been completed in the multiple PWM output mode

The count value is cleared to 0000H in the following cases.

- When the start trigger is input in the capture mode
- When capturing has been completed in the capture mode

Caution The count value is not captured to timer data register mn (TDRmn) even when the TCRmn register is read.

The TCRmn register read value differs as follows according to operation mode changes and the operating status.

Table 6-3. Timer Count Register mn (TCRmn) Read Value in Various Operation Modes

Operation Mode	Count Mode	Timer count register mn (TCRmn) Read Value[Note]			
		Value if the operation mode was changed after releasing reset	Value if the Operation was restarted after count operation paused (TTmn = 1)	Value if the operation mode was changed after count operation paused (TTmn = 1)	Value when waiting for a start trigger after one count
Interval timer mode	Count down	FFFFH	Value if stop	Undefined	–
Capture mode	Count up	0000H	Value if stop	Undefined	–
Event counter mode	Count down	FFFFH	Value if stop	Undefined	–
One-count mode	Count down	FFFFH	Value if stop	Undefined	FFFFH
Capture & one-count mode	Count up	0000H	Value if stop	Undefined	Capture value of TDRmn register + 1

Note This indicates the value read from the TCRmn register when channel n has stopped operating as a timer (TEmn = 0) and has been enabled to operate as a counter (TSmn = 1). The read value is held in the TCRmn register until the count operation starts.

Remark m: Unit number (m = 0), n: Channel number (n = 0 to 7)

6.2.2 Timer data register mn (TDRmn)

This is a 16-bit register from which a capture function and a compare function can be selected.

The capture or compare function can be switched by selecting an operation mode by using the MDmn3 to MDmn0 bits of timer mode register mn (TMRmn).

The value of the TDRmn register can be changed at any time.

This register can be read or written in 16-bit units.

In addition, for the TDRm1 and TDRm3 registers, while in the 8-bit timer mode (when the SPLIT bits of timer mode registers 01 and 03 (TMRm1, TMRm3) are 1), it is possible to read and write data in 8-bit units, with the higher 8 bits used as TDRm1H and TDRm3H, and the lower 8 bits used as TDRm1L and TDRm3L.

Reset signal generation clears this register to 0000H.

Figure 6-8. Format of Timer Data Register mn (TDRmn) (n = 0, 2, 4 to 7)

Address: FFF18H, FFF19H (TDR00), FFF64H, FFF65H (TDR02), FFF68H, FFF69H (TDR04) to FFF6EH, FFF6FH (TDR07) After reset: 0000H R/W

	FFF19H (TDR00)								FFF18H (TDR00)							
	15	14	13	12	11	10	9	8	7	6	5	4	3	2	1	0
TDRmn																

Figure 6-9. Format of Timer Data Register mn (TDRmn) (n = 1, 3)

Address: FFF1AH, FFF1BH (TDR01), FFF66H, FFF67H (TDR03) After reset: 0000H R/W

	FFF1BH (TDR01H)								FFF1AH (TDR01L)							
	15	14	13	12	11	10	9	8	7	6	5	4	3	2	1	0
TDRmn																

(i) When timer data register mn (TDRmn) is used as compare register

Counting down is started from the value set to the TDRmn register. When the count value reaches 0000H, an interrupt signal (INTTMmn) is generated. The TDRmn register holds its value until it is rewritten.

Caution The TDRmn register does not perform a capture operation even if a capture trigger is input, when it is set to the compare function.

(ii) When timer data register mn (TDRmn) is used as capture register

The count value of timer count register mn (TCRmn) is captured to the TDRmn register when the capture trigger is input.

A valid edge of the TImn pin can be selected as the capture trigger. This selection is made by timer mode register mn (TMRmn).

Remark m: Unit number (m = 0), n: Channel number (n = 0 to 7)

6.3 Registers Controlling Timer Array Unit

The timer array unit is controlled by the following registers.

- Peripheral enable register 0 (PER0)
- Timer clock select register m (TPSm)
- Timer mode register mn (TMRmn)
- Timer status register mn (TSRmn)
- Timer channel enable status register m (TEm)
- Timer channel start register m (TSm)
- Timer channel stop register m (TTm)
- Timer input select register 0 (TIS0)
- Timer output select register (TOS)
- Timer output enable register m (TOEm)
- Timer output register m (TOm)
- Timer output level register m (TOLm)
- Timer output mode register m (TOMm)
- Input switch control register (ISC)
- Noise filter enable register 1 (NFEN1)
- Port mode control register (PMCxx)
- Port mode register (PMxx)
- Port register (Pxx)

Caution Which registers and bits are included depends on the product. Be sure to set bits that are not mounted to their initial values.

Remark m: Unit number (m = 0), n: Channel number (n = 0 to 7)

6.3.1 Peripheral enable register 0 (PER0)

This registers is used to enable or disable supplying the clock to the peripheral hardware. Clock supply to a hardware macro that is not used is stopped in order to reduce the power consumption and noise.

When the timer array unit is used, be sure to set bit 0 (TAU0EN) of this register to 1.

The PER0 register can be set by a 1-bit or 8-bit memory manipulation instruction.

Reset signal generation clears this register to 00H.

Figure 6-10. Format of Peripheral Enable Register 0 (PER0)

Address: F00F0H After reset: 00H R/W

Symbol	<7>	6	<5>	<4>	<3>	<2>	1	<0>
PER0	RTCWEN	0	ADCEN	IICA0EN	SAU1EN	SAU0EN	0	TAU0EN

TAU0EN	Control of timer array unit input clock
0	Stops supply of input clock. ● SFR used by the timer array unit cannot be written. ● The timer array unit is in the reset status.
1	Supplies input clock. ● SFR used by the timer array unit can be read/written.

Cautions 1. When setting the timer array unit, be sure to set the following registers first while the TAU0EN bit is set to 1. If TAU0EN = 0, the values of the registers which control the timer array unit are cleared to their initial values and writing to them is ignored (except for timer input select register 0 (TIS0), input switch control register (ISC), noise filter enable register 1, 2 (NFEN1, NFEN2), port mode control register 4 (PMC4), port mode register 0, 1, 3, 4, 5, 12 (PM0, PM1, PM3, PM4, PM5, PM12), port register 0, 1, 3, 4, 5, 12 (P0, P1, P3, P4, P5, P12)).

● Timer clock select register m (TPSm)
● Timer mode register mn (TMRmn)
● Timer status register mn (TSRmn)
● Timer channel enable status register m (TEm)
● Timer channel start register m (TSm)
● Timer channel stop register m (TTm)
● Timer output enable register m (TOEm)
● Timer output register m (TOm)
● Timer output level register m (TOLm)
● Timer output mode register m (TOMm)

2. Be sure to clear bits 1 and 6 to “0”.

6.3.2 Timer clock select register m (TPSm)

The TPSm register is a 16-bit register that is used to select two types or four types of operation clocks (CKm0, CKm1, CKm2, CKm3) that are commonly supplied to each channel. CKm0 is selected by using bits 3 to 0 of the TPSm register, and CKm1 is selected by using bits 7 to 4 of the TPSm register. In addition, only for channels 1 and 3, CKm2 and CKm3 can be also selected. CKm2 is selected by using bits 9 and 8 of the TPSm register, and CKm3 is selected by using bits 13 and 12 of the TPSm register.

Rewriting of the TPSm register during timer operation is possible only in the following cases.

If the PRSm00 to PRSm03 bits can be rewritten (n = 0 to 7):

All channels for which CKm0 is selected as the operation clock (CKSmn1, CKSmn0 = 0, 0) are stopped (TEmn = 0).

If the PRSm10 to PRSm13 bits can be rewritten (n = 0 to 7):

All channels for which CKm1 is selected as the operation clock (CKSmn1, CKSmn0 = 0, 1) are stopped (TEmn = 0).

If the PRSm20 and PRSm21 bits can be rewritten (n = 1, 3):

All channels for which CKm2 is selected as the operation clock (CKSmn1, CKSmn0 = 1, 0) are stopped (TEmn = 0).

If the PRSm30 and PRSm31 bits can be rewritten (n = 1, 3):

All channels for which CKm3 is selected as the operation clock (CKSmn1, CKSmn0 = 1, 1) are stopped (TEmn = 0).

The TPSm register can be set by a 16-bit memory manipulation instruction.

Reset signal generation clears this register to 0000H.

Figure 6-11. Format of Timer Clock Select Register m (TPSm) (1/2)

Address: F01B6H, F01B7H After reset: 0000H R/W

Symbol	15	14	13	12	11	10	9	8	7	6	5	4	3	2	1	0
TPSm	0	0	PRS m31	PRS m30	0	0	PRS m21	PRS m20	PRS m13	PRS m12	PRS m11	PRS m10	PRS m03	PRS m02	PRS m01	PRS m00

PRS mk3	PRS mk2	PRS mk1	PRS mk0	Selection of operation clock (CKmk)[Note] (k = 0, 1)					
					f_{CLK} = 2 MHz	f_{CLK} = 5 MHz	f_{CLK} = 10 MHz	f_{CLK} = 20 MHz	f_{CLK} = 24 MHz
0	0	0	0	f_{CLK}	2 MHz	5 MHz	10 MHz	20 MHz	24 MHz
0	0	0	1	$f_{CLK}/2$	1 MHz	2.5 MHz	5 MHz	10 MHz	12 MHz
0	0	1	0	$f_{CLK}/2^2$	500 kHz	1.25 MHz	2.5 MHz	5 MHz	6 MHz
0	0	1	1	$f_{CLK}/2^3$	250 kHz	625 kHz	1.25 MHz	2.5 MHz	3 MHz
0	1	0	0	$f_{CLK}/2^4$	125 kHz	313 kHz	625 kHz	1.25 MHz	1.50 MHz
0	1	0	1	$f_{CLK}/2^5$	62.5 kHz	156 kHz	313 kHz	625 kHz	750 kHz
0	1	1	0	$f_{CLK}/2^6$	31.3 kHz	78.1 kHz	156 kHz	313 kHz	375 kHz
0	1	1	1	$f_{CLK}/2^7$	15.6 kHz	39.1 kHz	78.1 kHz	156 kHz	188 kHz
1	0	0	0	$f_{CLK}/2^8$	7.81 kHz	19.5 kHz	39.1 kHz	78.1 kHz	93.8 kHz
1	0	0	1	$f_{CLK}/2^9$	3.91 kHz	9.76 kHz	19.5 kHz	39.1 kHz	46.9 kHz
1	0	1	0	$f_{CLK}/2^{10}$	1.95 kHz	4.88 kHz	9.76 kHz	19.5 kHz	23.4 kHz
1	0	1	1	$f_{CLK}/2^{11}$	976 Hz	2.44 kHz	4.88 kHz	9.76 kHz	11.7 kHz
1	1	0	0	$f_{CLK}/2^{12}$	488 Hz	1.22 kHz	2.44 kHz	4.88 kHz	5.86 kHz
1	1	0	1	$f_{CLK}/2^{13}$	244 Hz	610 Hz	1.22 kHz	2.44 kHz	2.93 kHz
1	1	1	0	$f_{CLK}/2^{14}$	122 Hz	305 Hz	610 Hz	1.22 kHz	1.46 kHz
1	1	1	1	$f_{CLK}/2^{15}$	61.0 Hz	153 Hz	305 Hz	610 Hz	732 Hz

Note When changing the clock selected for f_{CLK} (by changing the system clock control register (CKC) value), stop timer array unit (TTm = 00FFH).

Cautions 1. Be sure to clear bits 15, 14, 11, and 10 to "0".

2. If f_{CLK} (undivided) is selected as the operation clock (CKmk) and TDRmn is set to 0000H (n = 0, m = 0 to 7), interrupt requests output from timer array units cannot be used.

Remarks 1. f_{CLK}: CPU/peripheral hardware clock frequency

<R> **2.** Waveform of the clock to be selected in the TPSm register which becomes high level for one period of f_{CLK} from its rising edge (m = 0, 1). For details, see **6.5.1 Count clock (f_{TCLK})**.

Figure 6-11. Format of Timer Clock Select Register m (TPSm) (2/2)

Address: F01B6H, F01B7H After reset: 0000H R/W

Symbol	15	14	13	12	11	10	9	8	7	6	5	4	3	2	1	0
TPSm	0	0	PRS m31	PRS m30	0	0	PRS m21	PRS m20	PRS m13	PRS m12	PRS m11	PRS m10	PRS m03	PRS m02	PRS m01	PRS m00

PRS m21	PRS m20	Selection of operation clock (CKm2)[Note]					
			f_{CLK} = 2 MHz	f_{CLK} = 5 MHz	f_{CLK} = 10 MHz	f_{CLK} = 20 MHz	f_{CLK} = 24 MHz
0	0	$f_{CLK}/2$	1 MHz	2.5 MHz	5 MHz	10 MHz	12 MHz
0	1	$f_{CLK}/2^2$	500 kHz	1.25 MHz	2.5 MHz	5 MHz	6 MHz
1	0	$f_{CLK}/2^4$	125 kHz	313 kHz	625 MHz	1.25 MHz	1.5 MHz
1	1	$f_{CLK}/2^6$	31.3 kHz	78.1 kHz	156 kHz	313 kHz	375 kHz

PRS m31	PRS m30	Selection of operation clock (CKm3)[Note]					
			f_{CLK} = 2 MHz	f_{CLK} = 5 MHz	f_{CLK} = 10 MHz	f_{CLK} = 20 MHz	f_{CLK} = 24 MHz
0	0	$f_{CLK}/2^8$	7.81 kHz	19.5 kHz	39.1 kHz	78.1 kHz	93.8 kHz
0	1	$f_{CLK}/2^{10}$	1.95 kHz	4.88 kHz	9.76 kHz	19.5 kHz	23.4 kHz
1	0	$f_{CLK}/2^{12}$	488 Hz	1.22 kHz	2.44 kHz	4.88 kHz	5.86 kHz
1	1	$f_{CLK}/2^{14}$	122 Hz	305 Hz	610 Hz	1.22 kHz	1.46 kHz

Note When changing the clock selected for f_{CLK} (by changing the system clock control register (CKC) value), stop timer array unit (TTm = 00FFH).
The timer array unit must also be stopped if the operating clock (f_{MCK}) specified by using the CKSmn0, and CKSmn1 bits or the valid edge of the signal input from the TImn pin is selected as the count clock (f_{TCLK}).

Caution Be sure to clear bits 15, 14, 11, 10 to "0".

By using channels 1 and 3 in the 8-bit timer mode and specifying CKm2 or CKm3 as the operation clock, the interval times shown in Table 6-4 can be achieved by using the interval timer function.

Table 6-4. Interval Times Available for Operation Clocks CKSm2 and CKSm3

Clock		Interval time[Note] (f_{CLK} = 20 MHz)			
		16 μs	160 μs	1.6 ms	16 ms
CKm2	$f_{CLK}/2$	√	–	–	–
	$f_{CLK}/2^2$	√	–	–	–
	$f_{CLK}/2^4$	√	√	–	–
	$f_{CLK}/2^6$	√	√	–	–
CKm3	$f_{CLK}/2^8$	–	√	√	–
	$f_{CLK}/2^{10}$	–	√	√	–
	$f_{CLK}/2^{12}$	–	–	√	√
	$f_{CLK}/2^{14}$	–	–	√	√

Note The margin is within 5 %.

Remarks 1. f_{CLK}: CPU/peripheral hardware clock frequency
2. For details of the waveform of $f_{CLK}/2^j$ selected with the TPSm register, see **6.5.1 Count clock (f_{TCLK}).**

6.3.3 Timer mode register mn (TMRmn)

The TMRmn register sets an operation mode of channel n. This register is used to select the operation clock (f_{MCK}), select the count clock, select the master/slave, select the 16 or 8-bit timer (only for channels 1 and 3), specify the start trigger and capture trigger, select the valid edge of the timer input, and specify the operation mode (interval, capture, event counter, one-count, or capture and one-count).

Rewriting the TMRmn register is prohibited when the register is in operation (when TEmn = 1). However, bits 7 and 6 (CISmn1, CISmn0) can be rewritten even while the register is operating with some functions (when TEmn = 1). (For details, see **6.8 Independent Channel Operation Function of Timer Array Unit** and **6.9 Simultaneous Channel Operation Function of Timer Array Unit)**.

The TMRmn register can be set by a 16-bit memory manipulation instruction.

Reset signal generation clears this register to 0000H.

Caution The bits mounted depend on the channels in the bit 11 of TMRmn register.
TMRm2, TMRm4, TMRm6: MASTERmn bit (n = 2, 4, 6)
TMRm1, TMRm3: SPLITmn bit (n = 1, 3)
TMRm0, TMRm5, TMRm7: Fixed to 0

Figure 6-12. Format of Timer Mode Register mn (TMRmn) (1/4)

Address: F0190H, F0191H (TMR00) to F019EH, F019FH (TMR07) After reset: 0000H R/W

Symbol	15	14	13	12	11	10	9	8	7	6	5	4	3	2	1	0
TMRmn (n = 2, 4, 6)	CKS mn1	CKS mn0	0	CCS mn	MAST ERmn	STS mn2	STS mn1	STS mn0	CIS mn1	CIS mn0	0	0	MD mn3	MD mn2	MD mn1	MD mn0

Symbol	15	14	13	12	11	10	9	8	7	6	5	4	3	2	1	0
TMRmn (n = 1, 3)	CKS mn1	CKS mn0	0	CCS mn	SPLIT mn	STS mn2	STS mn1	STS mn0	CIS mn1	CIS mn0	0	0	MD mn3	MD mn2	MD mn1	MD mn0

Symbol	15	14	13	12	11	10	9	8	7	6	5	4	3	2	1	0
TMRmn (n = 0, 5, 7)	CKS mn1	CKS mn0	0	CCS mn	0[Note]	STS mn2	STS mn1	STS mn0	CIS mn1	CIS mn0	0	0	MD mn3	MD mn2	MD mn1	MD mn0

CKS mn1	CKS mn0	Selection of operation clock (f_{MCK}) of channel n
0	0	Operation clock CKm0 set by timer clock select register m (TPSm)
0	1	Operation clock CKm2 set by timer clock select register m (TPSm)
1	0	Operation clock CKm1 set by timer clock select register m (TPSm)
1	1	Operation clock CKm3 set by timer clock select register m (TPSm)
Operation clock (f_{MCK}) is used by the edge detector. A count clock (f_{TCLK}) and a sampling clock are generated according to the setting of the CCSmn bit. The operation clocks CKm2 and CKm3 can only be selected for channels 1 and 3.		

CCS mn	Selection of count clock (f_{TCLK}) of channel n
0	Operation clock (f_{MCK}) specified by the CKSmn0 and CKSmn1 bits
1	Valid edge of input signal input from the TImn pin In channel 1, valid edge of input signal selected by TIS0
Count clock (f_{TCLK}) is used for the counter, output controller, and interrupt controller.	

Note Bit 11 is read-only and fixed to 0. Writing to this bit is ignored.

Cautions 1. Be sure to clear bits 13, 5, and 4 to "0".

2. The timer array unit must be stopped (TTm = 00FFH) if the clock selected for f_{CLK} is changed (by changing the value of the system clock control register (CKC)), even if the operating clock specified by using the CKSmn0 and CKSmn1 bits (f_{MCK}) or the valid edge of the signal input from the TImn pin is selected as the count clock (f_{TCLK}).

Remark m: Unit number (m = 0), n: Channel number (n = 0 to 7)

Figure 6-12. Format of Timer Mode Register mn (TMRmn) (2/4)

Address: F0190H, F0191H (TMR00) to F019EH, F019FH (TMR07) After reset: 0000H R/W

Symbol	15	14	13	12	11	10	9	8	7	6	5	4	3	2	1	0
TMRmn (n = 2, 4, 6)	CKSmn1	CKSmn0	0	CCSmn	MASTERmn	STSmn2	STSmn1	STSmn0	CISmn1	CISmn0	0	0	MDmn3	MDmn2	MDmn1	MDmn0

Symbol	15	14	13	12	11	10	9	8	7	6	5	4	3	2	1	0
TMRmn (n = 1, 3)	CKSmn1	CKSmn0	0	CCSmn	SPLITmn	STSmn2	STSmn1	STSmn0	CISmn1	CISmn0	0	0	MDmn3	MDmn2	MDmn1	MDmn0

Symbol	15	14	13	12	11	10	9	8	7	6	5	4	3	2	1	0
TMRmn (n = 0, 5, 7)	CKSmn1	CKSmn0	0	CCSmn	0 Note	STSmn2	STSmn1	STSmn0	CISmn1	CISmn0	0	0	MDmn3	MDmn2	MDmn1	MDmn0

(Bit 11 of TMRmn (n = 2, 4, 6))

MASTERmn	Selection between using channel n independently or simultaneously with another channel (as a slave or master)
0	Operates in independent channel operation function or as slave channel in simultaneous channel operation function.
1	Operates as master channel in simultaneous channel operation function.
Only the channel 2, 4, 6 can be set as a master channel (MASTERmn = 1). Be sure to use channel 0, 5, 7 are fixed to 0 (Regardless of the bit setting, channel 0 operates as master, because it is the highest channel). Clear the MASTERmn bit to 0 for a channel that is used with the independent channel operation function.	

(Bit 11 of TMRmn (n = 1, 3))

SPLITmn	Selection of 8 or 16-bit timer operation for channels 1 and 3
0	Operates as 16-bit timer. (Operates in independent channel operation function or as slave channel in simultaneous channel operation function.)
1	Operates as 8-bit timer.

STSmn2	STSmn1	STSmn0	Setting of start trigger or capture trigger of channel n
0	0	0	Only software trigger start is valid (other trigger sources are unselected).
0	0	1	Valid edge of the TImn pin input is used as both the start trigger and capture trigger.
0	1	0	Both the edges of the TImn pin input are used as a start trigger and a capture trigger.
1	0	0	Interrupt signal of the master channel is used (when the channel is used as a slave channel with the simultaneous channel operation function).
Other than above			Setting prohibited

Note Bit 11 is read-only and fixed to 0. Writing to this bit is ignored.

Remark m: Unit number (m = 0), n: Channel number (n = 0 to 7)

Figure 6-12. Format of Timer Mode Register mn (TMRmn) (3/4)

Address: F0190H, F0191H (TMR00) to F019EH, F019FH (TMR07) After reset: 0000H R/W

Symbol	15	14	13	12	11	10	9	8	7	6	5	4	3	2	1	0
TMRmn (n = 2, 4, 6)	CKS mn1	CKS mn0	0	CCS mn	MASTERmn	STS mn2	STS mn1	STS mn0	CIS mn1	CIS mn0	0	0	MD mn3	MD mn2	MD mn1	MD mn0

Symbol	15	14	13	12	11	10	9	8	7	6	5	4	3	2	1	0
TMRmn (n = 1, 3)	CKS mn1	CKS mn0	0	CCS mn	SPLIT mn	STS mn2	STS mn1	STS mn0	CIS mn1	CIS mn0	0	0	MD mn3	MD mn2	MD mn1	MD mn0

Symbol	15	14	13	12	11	10	9	8	7	6	5	4	3	2	1	0
TMRmn (n = 0, 5, 7)	CKS mn1	CKS mn0	0	CCS mn	0[Note]	STS mn2	STS mn1	STS mn0	CIS mn1	CIS mn0	0	0	MD mn3	MD mn2	MD mn1	MD mn0

CIS mn1	CIS mn0	Selection of TImn pin input valid edge
0	0	Falling edge
0	1	Rising edge
1	0	Both edges (when low-level width is measured) Start trigger: Falling edge, Capture trigger: Rising edge
1	1	Both edges (when high-level width is measured) Start trigger: Rising edge, Capture trigger: Falling edge
If both the edges are specified when the value of the STSmn2 to STSmn0 bits is other than 010B, set the CISmn1 to CISmn0 bits to 10B.		

MD mn3	MD mn2	MD mn1	Operation mode of channel n	Corresponding function	Count operation of TCR
0	0	0	Interval timer mode	Interval timer/Square wave output/PWM output (master)	Counting down
0	1	0	Capture mode	Input pulse interval measurement	Counting up
0	1	1	Event counter mode	External event counter	Counting down
1	0	0	One-count mode	Delay counter/One-shot pulse output/PWM output (slave)	Counting down
1	1	0	Capture & one-count mode	Measurement of high-/low-level width of input signal	Counting up
Other than above			Setting prohibited		
The operation of each mode varies depending on MDmn0 bit (see next table).					

Note Bit 11 is read-only and fixed to 0. Writing to this bit is ignored.

Remark m: Unit number (m = 0), n: Channel number (n = 0 to 7)

Figure 6-12. Format of Timer Mode Register mn (TMRmn) (4/4)

Address: F0190H, F0191H (TMR00) to F019EH, F019FH (TMR07) After reset: 0000H R/W

Symbol	15	14	13	12	11	10	9	8	7	6	5	4	3	2	1	0
TMRmn (n = 2, 4, 6)	CKS mn1	CKS mn0	0	CCS mn	MASTERmn	STS mn2	STS mn1	STS mn0	CIS mn1	CIS mn0	0	0	MD mn3	MD mn2	MD mn1	MD mn0

Symbol	15	14	13	12	11	10	9	8	7	6	5	4	3	2	1	0
TMRmn (n = 1, 3)	CKS mn1	CKS mn0	0	CCS mn	SPLIT mn	STS mn2	STS mn1	STS mn0	CIS mn1	CIS mn0	0	0	MD mn3	MD mn2	MD mn1	MD mn0

Symbol	15	14	13	12	11	10	9	8	7	6	5	4	3	2	1	0
TMRmn (n = 0, 5, 7)	CKS mn1	CKS mn0	0	CCS mn	0[Note 1]	STS mn2	STS mn1	STS mn0	CIS mn1	CIS mn0	0	0	MD mn3	MD mn2	MD mn1	MD mn0

Operation mode (Value set by the MDmn3 to MDmn1 bits (see the previous page)	MD mn0	Setting of starting counting and interrupt
● Interval timer mode (0, 0, 0)	0	Timer interrupt is not generated when counting is started (timer output does not change, either).
● Capture mode (0, 1, 0)	1	Timer interrupt is generated when counting is started (timer output also changes).
● Event counter mode (0, 1, 1)	0	Timer interrupt is not generated when counting is started (timer output does not change, either).
● One-count mode[Note 2] (1, 0, 0)	0	Start trigger is invalid during counting operation. At that time, interrupt is not generated.
	1	Start trigger is valid during counting operation[Note 3]. At that time, interrupt is not generated.
● Capture & one-count mode (1, 1, 0)	0	Timer interrupt is not generated when counting is started (timer output does not change, either). Start trigger is invalid during counting operation. At that time, interrupt is not generated.
Other than above		Setting prohibited

Notes 1. Bit 11 is read-only and fixed to 0. Writing to this bit is ignored.

2. In one-count mode, interrupt output (INTTMmn) when starting a count operation and TOmn output are not controlled.

3. If the start trigger (TSmn = 1) is issued during operation, the counter is initialized, an interrupt is generated, and recounting starts. (No interrupt request occurs.)

Remark m: Unit number (m = 0), n: Channel number (n = 0 to 7)

6.3.4 Timer status register mn (TSRmn)

The TSRmn register indicates the overflow status of the counter of channel n.

The TSRmn register is valid only in the capture mode (MDmn3 to MDmn1 = 010B) and capture & one-count mode (MDmn3 to MDmn1 = 110B). See Table 6-5 for the operation of the OVF bit in each operation mode and set/clear conditions.

The TSRmn register can be read by a 16-bit memory manipulation instruction.

The lower 8 bits of the TSRmn register can be set with an 8-bit memory manipulation instruction with TSRmnL.

Reset signal generation clears this register to 0000H.

Figure 6-13. Format of Timer Status Register mn (TSRmn)

Address: F01A0H, F01A1H (TSR00) to F01AEH, F01AFH (TSR07) After reset: 0000H R

Symbol	15	14	13	12	11	10	9	8	7	6	5	4	3	2	1	0
TSRmn	0	0	0	0	0	0	0	0	0	0	0	0	0	0	0	OVF

OVF	Counter overflow status of channel n
0	Overflow does not occur.
1	Overflow occurs.
When OVF = 1, this flag is cleared (OVF = 0) when the next value is captured without overflow.	

Remark m: Unit number (m = 0), n: Channel number (n = 0 to 7)

Table 6-5. OVF Bit Operation and Set/Clear Conditions in Each Operation Mode

Timer Operation Mode	OVF Bit	Set/Clear Conditions
● Capture mode ● Capture & one-count mode	Cleared	When no overflow has occurred upon capturing
	Set	When an overflow has occurred upon capturing
● Interval timer mode ● Event counter mode ● One-count mode	Cleared	– (Use prohibited)
	Set	

Remark The OVF bit does not change immediately after the counter has overflowed, but changes upon the subsequent capture.

6.3.5 Timer channel enable status register m (TEm)

The TEm register is used to enable or stop the timer operation of each channel.

Each bit of the TEm register corresponds to each bit of the timer channel start register m (TSm) and the timer channel stop register m (TTm). When a bit of the TSm register is set to 1, the corresponding bit of this register is set to 1. When a bit of the TTm register is set to 1, the corresponding bit of this register is cleared to 0.

The TEm register can be read by a 16-bit memory manipulation instruction.

The lower 8 bits of the TEm register can be set with a 1-bit or 8-bit memory manipulation instruction with TEmL.

Reset signal generation clears this register to 0000H.

Figure 6-14. Format of Timer Channel Enable Status Register m (TEm)

Address: F01B0H, F01B1H After reset: 0000H R

Symbol	15	14	13	12	11	10	9	8	7	6	5	4	3	2	1	0
TEm	0	0	0	0	TEHm3	0	TEHm1	0	TEm7	TEm6	TEm5	TEm4	TEm3	TEm2	TEm1	TEm0

TEHm3	Indication of whether operation of the higher 8-bit timer is enabled or stopped when channel 3 is in the 8-bit timer mode
0	Operation is stopped.
1	Operation is enabled.

TEHm1	Indication of whether operation of the higher 8-bit timer is enabled or stopped when channel 1 is in the 8-bit timer mode
0	Operation is stopped.
1	Operation is enabled.

TEmn	Indication of operation enable/stop status of channel n
0	Operation is stopped.
1	Operation is enabled.
This bit displays whether operation of the lower 8-bit timer for TEm1 and TEm3 is enabled or stopped when channel 1 or 3 is in the 8-bit timer mode.	

Remark m: Unit number (m = 0), n: Channel number (n = 0 to 7)

6.3.6 Timer channel start register m (TSm)

The TSm register is a trigger register that is used to initialize timer count register mn (TCRmn) and start the counting operation of each channel.

When a bit of this register is set to 1, the corresponding bit of timer channel enable status register m (TEm) is set to 1. The TSmn, TSHm1, TSHm3 bits are immediately cleared when operation is enabled (TEmn, TEHm1, TEHm3 = 1), because they are trigger bits.

The TSm register can be set by a 16-bit memory manipulation instruction.

The lower 8 bits of the TSm register can be set with a 1-bit or 8-bit memory manipulation instruction with TSmL.

Reset signal generation clears this register to 0000H.

Figure 6-15. Format of Timer Channel Start Register m (TSm)

Address: F01B2H, F01B3H After reset: 0000H R/W

Symbol	15	14	13	12	11	10	9	8	7	6	5	4	3	2	1	0
TSm	0	0	0	0	TSHm3	0	TSHm1	0	TSm7	TSm6	TSm5	TSm4	TSm3	TSm2	TSm1	TSm0

TSHm3	Trigger to enable operation (start operation) of the higher 8-bit timer when channel 3 is in the 8-bit timer mode
0	No trigger operation
1	The TEHm3 bit is set to 1 and the count operation is enabled. The TCRm3 register count operation start in the interval timer mode in the count operation enabled state (see **Table 6-6** in **6.5.2 Start timing of counter**).

TSHm1	Trigger to enable operation (start operation) of the higher 8-bit timer when channel 1 is in the 8-bit timer mode
0	No trigger operation
1	The TEHm1 bit is set to 1 and the count operation is enabled. The TCRm1 register count operation start in the interval timer mode in the count operation enabled state (see **Table 6-6** in **6.5.2 Start timing of counter**).

TSmn	Operation enable (start) trigger of channel n
0	No trigger operation
1	The TEmn bit is set to 1 and the count operation is enabled. The TCRmn register count operation start in the count operation enabled state varies depending on each operation mode (see **Table 6-6** in **6.5.2 Start timing of counter**). This bit is the trigger to enable operation (start operation) of the lower 8-bit timer for TSm1 and TSm3 when channel 1 or 3 is in the 8-bit timer mode.

Cautions 1. Be sure to clear bits 15 to 12, 11, and 8 to "0"

2. When switching from a function that does not use TImn pin input to one that does, the following wait period is required from when timer mode register mn (TMRmn) is set until the TSmn (TSHm1, TSHm3) bit is set to 1.

When the TImn pin noise filter is enabled (TNFENnm = 1): Four cycles of the operation clock (f_{MCK})

When the TImn pin noise filter is disabled (TNFENnm = 0): Two cycles of the operation clock (f_{MCK})

Remarks 1. When the TSm register is read, 0 is always read.

2. m: Unit number (m = 0), n: Channel number (n = 0 to 7)

6.3.7 Timer channel stop register m (TTm)

The TTm register is a trigger register that is used to stop the counting operation of each channel.

When a bit of this register is set to 1, the corresponding bit of timer channel enable status register m (TEm) is cleared to 0. The TTmn, TTHm1, TTHm3 bits are immediately cleared when operation is stopped (TEmn, TTHm1, TTHm3 = 0), because they are trigger bits.

The TTm register can be set by a 16-bit memory manipulation instruction.

The lower 8 bits of the TTm register can be set with a 1-bit or 8-bit memory manipulation instruction with TTmL.

Reset signal generation clears this register to 0000H.

Figure 6-16. Format of Timer Channel Stop Register m (TTm)

Address: F01B4H, F01B5H After reset: 0000H R/W

Symbol	15	14	13	12	11	10	9	8	7	6	5	4	3	2	1	0
TTm	0	0	0	0	TTHm3	0	TTHm1	0	TTm7	TTm6	TTm5	TTm4	TTm3	TTm2	TTm1	TTm0

TTHm3	Trigger to stop operation of the higher 8-bit timer when channel 3 is in the 8-bit timer mode
0	No trigger operation
1	TEHm3 bit is cleared to 0 and the count operation is stopped.

TTHm1	Trigger to stop operation of the higher 8-bit timer when channel 1 is in the 8-bit timer mode
0	No trigger operation
1	TEHm1 bit is cleared to 0 and the count operation is stopped.

TTmn	Operation stop trigger of channel n
0	No trigger operation
1	TEmn bit is cleared to 0 and the count operation is stopped. This bit is the trigger to stop operation of the lower 8-bit timer for TTm1 and TTm3 when channel 1 or 3 is in the 8-bit timer mode.

Caution Be sure to clear bits 15 to 12, 10, and 8 of the TTm register to “0”.

Remarks 1. When the TTm register is read, 0 is always read.

2. m: Unit number (m = 0), n: Channel number (n = 0 to 7)

6.3.8 Timer input select register 0 (TIS0)

The TIS0 register is used to select the channel 1 timer input.

The TIS0 register can be set by an 8-bit memory manipulation instruction.

Reset signal generation clears this register to 00H.

Figure 6-17. Format of Timer Input Select Register 0 (TIS0)

Address: F0074H After reset: 00H R/W

Symbol	7	6	5	4	3	2	1	0
TIS0	0	0	0	0	0	TIS02	TIS01	TIS00

TIS02	TIS01	TIS00	Selection of timer input used with channel 1
0	0	0	Input signal of timer input pin (TI01)
0	0	1	
0	1	0	
0	1	1	
1	0	0	Low-speed on-chip oscillator clock (f_{IL})
1	0	1	Subsystem clock (f_{SUB})
Other than above			Setting prohibited

Caution At least 1/f_{MCK} + 10 ns is necessary as the high-level and low-level widths of the timer input to be selected. Thus, the TIS02 bit cannot be set to 1 when f_{SUB} is selected as f_{CLK} (CSS in CKC register = 1).

6.3.9 Timer output select register (TOS)

The TOS register is used to enable the remote control output function.

Remote control output are generated by using the PWM output signal generated by channels 2 and 3 (mask wave) to mask the PWM output signal generated by channels 4 and 5 (carrier wave).

Rewriting the TOS register is only possible before counting starts (TE02, TE03, TE04, TE05 = 0).

The TOS register can be set by a 1-bit or 8-bit memory manipulation instruction.

Reset signal generation clears this register to 00H.

Figure 6-18. Format of Timer Output Select Register (TOS)

Address: F0079H After reset: 00H R/W

Symbol	7	6	5	4	3	2	1	0
TOS	0	0	0	0	0	0	0	TOS0

TOS0	Remote control output setting
0	Disable (channels 2, 3, 4, and 5 are used for timer output)
1	Enable (remote control output to the REMOOUT pin)

Caution Channels 2, 3, 4, and 5 cannot be used for any other function when remote control output is enabled (TOS0 = 1).

6.3.10 Timer output enable register m (TOEm)

The TOEm register is used to enable or disable timer output of each channel.

Channel n for which timer output has been enabled becomes unable to rewrite the value of the TOmn bit of timer output register m (TOm) described later by software, and the value reflecting the setting of the timer output function through the count operation is output from the timer output pin (TOmn).

The TOEm register can be set by a 16-bit memory manipulation instruction.

The lower 8 bits of the TOEm register can be set with a 1-bit or 8-bit memory manipulation instruction with TOEmL.

Reset signal generation clears this register to 0000H.

Figure 6-19. Format of Timer Output Enable Register m (TOEm)

Address: F01BAH, F01BBH After reset: 0000H R/W

Symbol	15	14	13	12	11	10	9	8	7	6	5	4	3	2	1	0
TOEm	0	0	0	0	0	0	0	0	TOEm7	TOEm6	TOEm5	TOEm4	TOEm3	TOEm2	TOEm1	TOEm0

TOEmn	Timer output enable/disable of channel n
0	Disable output of timer. Without reflecting on TOmn bit timer operation, to fixed the output. Writing to the TOmn bit is enabled and the level set in the TOmn bit is output from the TOmn pin.
1	Enable output of timer. Reflected in the TOmn bit timer operation, to generate the output waveform. Writing to the TOmn bit is disabled (writing is ignored).

Caution Be sure to clear bits 15 to 8 to “0”.

Remark m: Unit number (m = 0), n: Channel number (n = 0 to 7)

6.3.11 Timer output register m (TOm)

The TOm register is a buffer register of timer output of each channel.

The value of each bit in this register is output from the timer output pin (TOmn) of each channel.

The TOmn bit of this register can be rewritten by software only when timer output is disabled (TOEmn = 0). When timer output is enabled (TOEmn = 1), rewriting this register by software is ignored, and the value is changed only by the timer operation.

To use the P52/TI00/TO00, P32/TI01/TO01, P54/TI02/TO02, P30/TI03/TO03, P14/TI04/TO04, P42/TI05/TO05, P56/TI06/TO06, or P15/TI07/TO07 pin as a port function pin, set the corresponding TOmn bit to “0”.

The TOm register can be set by a 16-bit memory manipulation instruction.

The lower 8 bits of the TOm register can be set with an 8-bit memory manipulation instruction with TOmL.

Reset signal generation clears this register to 0000H.

Figure 6-20. Format of Timer Output Register m (TOm)

Address: F01B8H, F01B9H After reset: 0000H R/W

Symbol	15	14	13	12	11	10	9	8	7	6	5	4	3	2	1	0
TOm	0	0	0	0	0	0	0	0	TOm7	TOm6	TOm5	TOm4	TOm3	TOm2	TOm1	TOm0

TOmn	Timer output of channel n
0	Timer output value is “0”.
1	Timer output value is “1”.

Caution Be sure to clear bits 15 to 8 to “0”.

Remark m: Unit number (m = 0), n: Channel number (n = 0 to 7)

6.3.12 Timer output level register m (TOLm)

The TOLm register is a register that controls the timer output level of each channel.

The setting of the inverted output of channel n by this register is reflected at the timing of set or reset of the timer output signal while the timer output is enabled (TOEmn = 1) in the Slave channel output mode (TOMmn = 1). In the master channel output mode (TOMmn = 0), this register setting is invalid.

The TOLm register can be set by a 16-bit memory manipulation instruction.

The lower 8 bits of the TOLm register can be set with an 8-bit memory manipulation instruction with TOLmL.

Reset signal generation clears this register to 0000H.

Figure 6-21. Format of Timer Output Level Register m (TOLm)

Address: F01BCH, F01BDH After reset: 0000H R/W

Symbol	15	14	13	12	11	10	9	8	7	6	5	4	3	2	1	0
TOLm	0	0	0	0	0	0	0	0	TOLm7	TOLm6	TOLm5	TOLm4	TOLm3	TOLm2	TOLm1	0

TOLmn	Control of timer output level of channel n
0	Positive logic output (active-high)
1	Negative logic output (active-low)

Caution Be sure to clear bits 15 to 8, and 0 to “0”.

Remarks 1. If the value of this register is rewritten during timer operation, the timer output logic is inverted when the timer output signal changes next, instead of immediately after the register value is rewritten.

2. m: Unit number (m = 0), n: Channel number (n = 0 to 7)

6.3.13 Timer output mode register m (TOMm)

The TOMm register is used to control the timer output mode of each channel.

When a channel is used for the independent channel operation function, set the corresponding bit of the channel to be used to 0.

When a channel is used for the simultaneous channel operation function (PWM output, one-shot pulse output, or multiple PWM output), set the corresponding bit of the master channel to 0 and the corresponding bit of the slave channel to 1.

The setting of each channel n by this register is reflected at the timing when the timer output signal is set or reset while the timer output is enabled (TOEmn = 1).

The TOMm register can be set by a 16-bit memory manipulation instruction.

The lower 8 bits of the TOMm register can be set with an 8-bit memory manipulation instruction with TOMmL.

Reset signal generation clears this register to 0000H.

Figure 6-22. Format of Timer Output Mode Register m (TOMm)

Address: F01BEH, F01BFH After reset: 0000H R/W

Symbol	15	14	13	12	11	10	9	8	7	6	5	4	3	2	1	0
TOMm	0	0	0	0	0	0	0	0	TOMm7	TOMm6	TOMm5	TOMm4	TOMm3	TOMm2	TOMm1	0

TOMmn	Control of timer output mode of channel n
0	Master channel output mode (to produce toggle output by timer interrupt request signal (INTTMmn))
1	Slave channel output mode (output is set by the timer interrupt request signal (INTTMmn) of the master channel, and reset by the timer interrupt request signal (INTTM0p) of the slave channel)

Caution Be sure to clear bits 15 to 8, and 0 to “0”.

Remark m: Unit number (m = 0)
n: Channel number
n = 0 to 7 (n = 0, 2, 4, 6 for master channel)
p: Slave channel number
n < p ≤ 7
(For details of the relationship between the master channel and slave channel, see **6.4.1 Basic rules of simultaneous channel operation function**.)

6.3.14 Input switch control register (ISC)

The ISC1 and ISC0 bits of the ISC register are used to implement LIN-bus communication operation by using channel 7 in association with the serial array unit. When the ISC1 bit is set to 1, the input signal of the serial data input pin (RxD0) is selected as a timer input signal.

The ISC register can be set by a 1-bit or 8-bit memory manipulation instruction.

Reset signal generation clears this register to 00H.

Figure 6-23. Format of Input Switch Control Register (ISC)

Address: F0073H After reset: 00H R/W

Symbol	7	6	5	4	3	2	1	0
ISC	0	0	0	0	0	0	ISC1	ISC0

ISC1	Switching channel 7 input of timer array unit
0	Uses the input signal of the TI07 pin as a timer input (normal operation).
1	Input signal of the RxD0 pin is used as timer input (detects the wakeup signal and measures the low width of the break field and the pulse width of the sync field).

ISC0	Switching external interrupt (INTP0) input
0	Uses the input signal of the INTP0 pin as an external interrupt (normal operation).
1	Uses the input signal of the RxD0 pin as an external interrupt (wakeup signal detection).

Cautions 1. Be sure to clear bits 7 to 2 to "0".

2. When using 16-bit timer KB20, set the ISC register to its initial value (00H).

Remark When the LIN-bus communication function is used, select the input signal of the RxD0 pin by setting ISC1 to 1.

6.3.15 Noise filter enable register 1 (NFEN1)

The NFEN1 register is used to set whether the noise filter can be used for the timer input signal to each channel.

Enable the noise filter by setting the corresponding bits to 1 on the pins in need of noise removal.

When the noise filter is enabled, after synchronization with the operating clock (f_{MCK}) for the target channel, whether the signal keeps the same value for two clock cycles is detected.

When the noise filter is disabled, the input signal is only synchronized with the operating clock (f_{MCK}) for the target channel[Note].

The NFEN1 register can be set by a 1-bit or 8-bit memory manipulation instruction.

Reset signal generation clears this register to 00H.

Note For details, see **6.5.1 (2) When valid edge of input signal via the TImn pin is selected (CCSmn = 1)** and **6.5.2 Start timing of counter**.

Figure 6-24. Format of Noise Filter Enable Register 1 (NFEN1)

Address: F0071H After reset: 00H R/W

Symbol	7	6	5	4	3	2	1	0
NFEN1	TNFEN07	TNFEN06	TNFEN05	TNFEN04	TNFEN03	TNFEN02	TNFEN01	TNFEN00

TNFEN07	Enable/disable using noise filter of TI07 pin or RxD0 pin input signal[Note]
0	Noise filter OFF
1	Noise filter ON

TNFEN06	Enable/disable using noise filter of TI06 pin input signal
0	Noise filter OFF
1	Noise filter ON

TNFEN05	Enable/disable using noise filter of TI05 pin input signal
0	Noise filter OFF
1	Noise filter ON

TNFEN04	Enable/disable using noise filter of TI04 pin input signal
0	Noise filter OFF
1	Noise filter ON

TNFEN03	Enable/disable using noise filter of TI03 pin input signal
0	Noise filter OFF
1	Noise filter ON

TNFEN02	Enable/disable using noise filter of TI02 pin input signal
0	Noise filter OFF
1	Noise filter ON

TNFEN01	Enable/disable using noise filter of TI01 pin input signal
0	Noise filter OFF
1	Noise filter ON

TNFEN00	Enable/disable using noise filter of TI00 pin input signal
0	Noise filter OFF
1	Noise filter ON

Note The applicable pin can be switched by setting the ISC1 bit of the ISC register.

ISC1 = 0: Whether or not to use the noise filter of the TI07 pin can be selected.

ISC1 = 1: Whether or not to use the noise filter of the RxD0 pin can be selected.

6.3.16 Registers controlling port functions of pins to be used for timer I/O

Using port pins for the timer array unit functions requires setting of the registers that control the port functions multiplexed on the target pins (port mode register (PMxx), port register (Pxx), and port mode control register (PMCxx)). For details, see **4.3.1 Port mode registers (PMxx)**, **4.3.2 Port registers (Pxx)**, and **4.3.6 Port mode control registers (PMCxx)**.

The port mode register (PMxx), port register (Pxx), and port mode control register (PMCxx) to be set depend on the product. For details, see **4.5.3 Register setting examples for used port and alternate functions**.

When using the ports (such as P14/TI04/TO04 and P42/TI05/TO05) to be shared with the timer output pin for timer output, set the port mode control register (PMCxx) bit, port mode register (PMxx) bit and port register (Pxx) bit corresponding to each port to 0.

Example: When using P14/TI04/TO04 for timer output
Set the PM14 bit of port mode register 1 to 0.
Set the P14 bit of port register 1 to 0.
Set bit of LCD port function register (PFSEGx) to 0.

When using the ports (such as P14/TI04/TO04 and P42/TI05/TO05) to be shared with the timer input pin for timer input, set the port mode register (PMxx) bit corresponding to each port to 1. And set the port mode control register (PMCxx) bit corresponding to each port to 0. At this time, the port register (Pxx) bit may be 0 or 1.

Example: When using P14/TI04/TO04 for timer input
Set the PM14 bit of port mode register 1 to 1.
Set the P14 bit of port register 1 to 0 or 1.
Set bit of LCD port function register (PFSEGx) to 0.

6.4 Basic Rules of Timer Array Unit

6.4.1 Basic rules of simultaneous channel operation function

When simultaneously using multiple channels, namely, a combination of a master channel (a reference timer mainly counting the cycle) and slave channels (timers operating according to the master channel), the following rules apply.

(1) Only an even channel (channel 0, 2, 4, etc.) can be set as a master channel.
(2) Any channel, except channel 0, can be set as a slave channel.
(3) The slave channel must be lower than the master channel.
Example: If channel 2 is set as a master channel, channel 3 or those that follow (channels 3, 4, 5, etc.) can be set as a slave channel.

(4) Two or more slave channels can be set for one master channel.
(5) When two or more master channels are to be used, slave channels with a master channel between them may not be set.
Example: If channels 0 and 4 are set as master channels, channels 1 to 3 can be set as the slave channels of master channel 0. Channels 5 to 7 cannot be set as the slave channels of master channel 0.

(6) The operating clock for a slave channel in combination with a master channel must be the same as that of the master channel. The CKSmn0, CKSmn1 bits (bit 15, 14 of timer mode register mn (TMRmn)) of the slave channel that operates in combination with the master channel must be the same value as that of the master channel.
(7) A master channel can transmit INTTMmn (interrupt), start software trigger, and count clock to the lower channels.
(8) A slave channel can use INTTMmn (interrupt), a start software trigger, or the count clock of the master channel as a source clock, but cannot transmit its own INTTMmn (interrupt), start software trigger, or count clock to channels with lower channel numbers.
(9) A master channel cannot use INTTMmn (interrupt), a start software trigger, or the count clock from the other higher master channel as a source clock.
(10) To simultaneously start channels that operate in combination, the channel start trigger bit (TSmn) of the channels in combination must be set at the same time.
(11) During the counting operation, a TSmn bit of a master channel or TSmn bits of all channels which are operating simultaneously can be set. It cannot be applied to TSmn bits of slave channels alone.
(12) To stop the channels in combination simultaneously, the channel stop trigger bit (TTmn) of the channels in combination must be set at the same time.
(13) CKm2/CKm3 cannot be selected while channels are operating simultaneously, because the operating clocks of master channels and slave channels have to be synchronized.
(14) Timer mode register m0 (TMRm0) has no master bit (it is fixed as “0”). However, as channel 0 is the highest channel, it can be used as a master channel during simultaneous operation.

The rules of the simultaneous channel operation function are applied in a channel group (a master channel and slave channels forming one simultaneous channel operation function).

If two or more channel groups that do not operate in combination are specified, the basic rules of the simultaneous channel operation function in **6.4.1 Basic rules of simultaneous channel operation function** do not apply to the channel groups.

Remark m: Unit number (m = 0), n: Channel number (n = 0 to 7)

Example

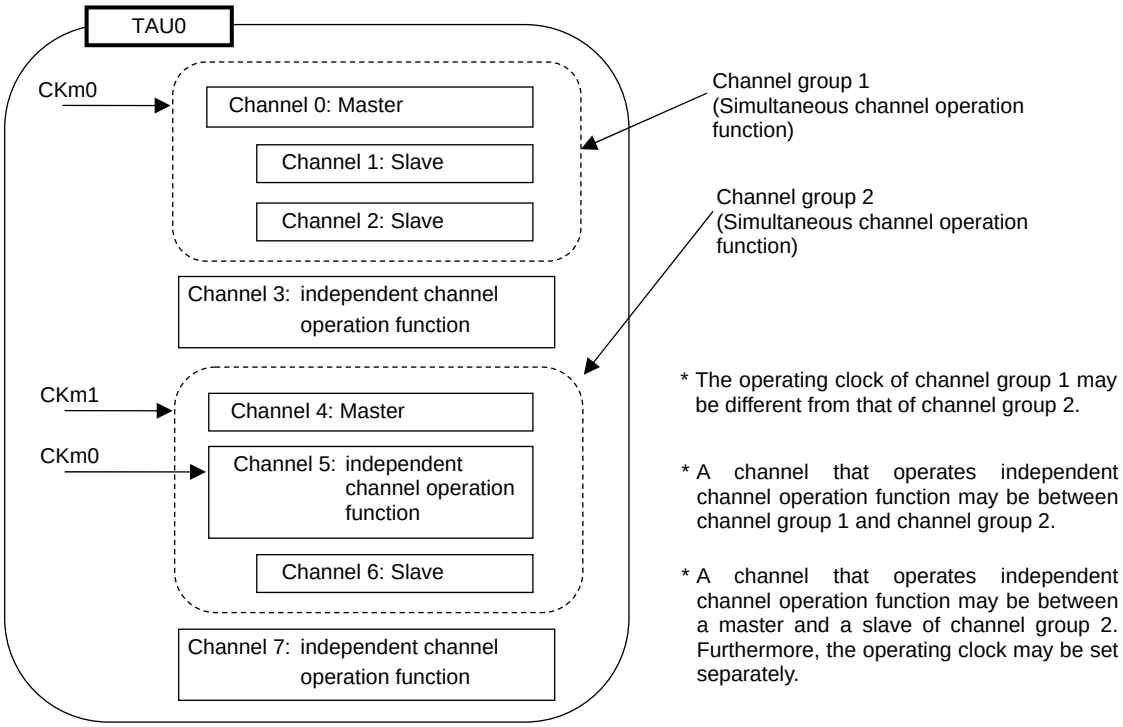

* The operating clock of channel group 1 may be different from that of channel group 2.

* A channel that operates independent channel operation function may be between channel group 1 and channel group 2.

* A channel that operates independent channel operation function may be between a master and a slave of channel group 2. Furthermore, the operating clock may be set separately.

6.4.2 Basic rules of 8-bit timer operation function (channels 1 and 3 only)

The 8-bit timer operation function makes it possible to use a 16-bit timer channel in a configuration consisting of two 8-bit timer channels.

This function can only be used for channels 1 and 3, and there are several rules for using it.

The basic rules for this function are as follows:

(1) The 8-bit timer operation function applies only to channels 1 and 3.
(2) When using 8-bit timers, set the SPLIT bit of timer mode register mn (TMRmn) to 1.
(3) The higher 8 bits can be operated as the interval timer function.
(4) At the start of operation, the higher 8 bits output INTTMm1H/INTTMm3H (an interrupt) (which is the same operation performed when MDmn0 is set to 1).
(5) The operation clock of the higher 8 bits is selected according to the CKSmn1 and CKSmn0 bits of the lower-bit TMRmn register.
(6) For the higher 8 bits, the TSHm1/TSHm3 bit is manipulated to start channel operation and the TTHm1/TTHm3 bit is manipulated to stop channel operation. The channel status can be checked using the TEHm1/TEHm3 bit.
(7) The lower 8 bits operate according to the TMRmn register settings. The following three functions support operation of the lower 8 bits:
   - Interval timer function
   - External event counter function
   - Delay count function

(8) For the lower 8 bits, the TSm1/TSm3 bit is manipulated to start channel operation and the TTm1/TTm3 bit is manipulated to stop channel operation. The channel status can be checked using the TEm1/TEm3 bit.
(9) During 16-bit operation, manipulating the TSHm1, TSHm3, TTHm1, and TTHm3 bits is invalid. The TSm1, TSm3, TTm1, and TTm3 bits are manipulated to operate channels 1 and 3. The TEHm3 and TEHm1 bits are not changed.
(10) For the 8-bit timer function, the simultaneous operation functions (one-shot pulse, PWM, and multiple PWM) cannot be used.

Remark m: Unit number (m = 0), n: Channel number (n = 1, 3)

6.5 Operation of Counter

6.5.1 Count clock (f_{TCLK})

The count clock (f_{TCLK}) of the timer array unit can be selected from the following according to the CCSmn bit of timer mode register mn (TMRmn).

- Operation clock (f_{MCK}) specified by the CKSmn0 and CKSmn1 bits
- Valid edge of input signal input from the TImn pin

Because the timer array unit is designed to operate in synchronization with f_{CLK}, the timings of the count clock (f_{TCLK}) are shown below.

(1) When operation clock (f_{MCK}) specified by the CKSmn0 and CKSmn1 bits is selected (CCSmn = 0)

The count clock (f_{TCLK}) is between f_{CLK} to f_{CLK} /2^{15} by setting of timer clock select register m (TPSm). When a divided f_{CLK} is selected, however, the clock selected in TPSmn register, but a signal which becomes high level for one period of f_{CLK} from its rising edge. When a f_{CLK} is selected, fixed to high level

Counting of timer count register mn (TCRmn) delayed by one period of f_{CLK} from rising edge of the count clock, because of synchronization with f_{CLK}. But, this is described as “counting at rising edge of the count clock”, as a matter of convenience.

Figure 6-25. Timing of f_{CLK} and count clock (f_{TCLK}) (When CCSmn = 0)

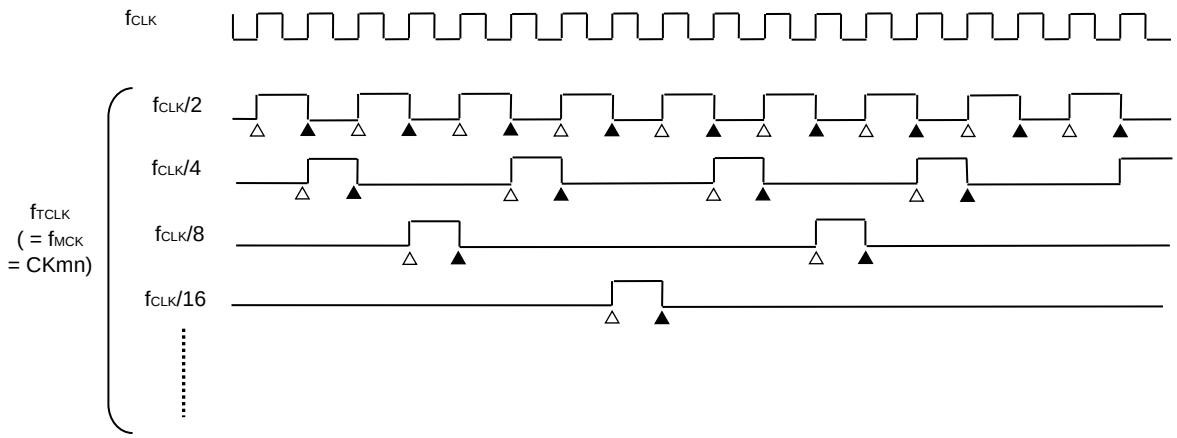

Remarks 1. △ : Rising edge of the count clock
▲ : Synchronization, increment/decrement of counter

2. f_{CLK}: CPU/peripheral hardware clock

(2) When valid edge of input signal via the TImn pin is selected (CCSmn = 1)

The count clock (f_{TCLK}) becomes the signal that detects valid edge of input signal via the TImn pin and synchronizes next rising f_{MCK}. The count clock (f_{TCLK}) is delayed for 1 to 2 period of f_{MCK} from the input signal via the TImn pin (when a noise filter is used, the delay becomes 3 to 4 clock).

Counting of timer count register mn (TCRmn) delayed by one period of f_{CLK} from rising edge of the count clock, because of synchronization with f_{CLK}. But, this is described as “counting at valid edge of input signal via the TImn pin”, as a matter of convenience.

Figure 6-26. Timing of f_{CLK} and count clock (f_{TCLK}) (When CCSmn = 1, noise filter unused)

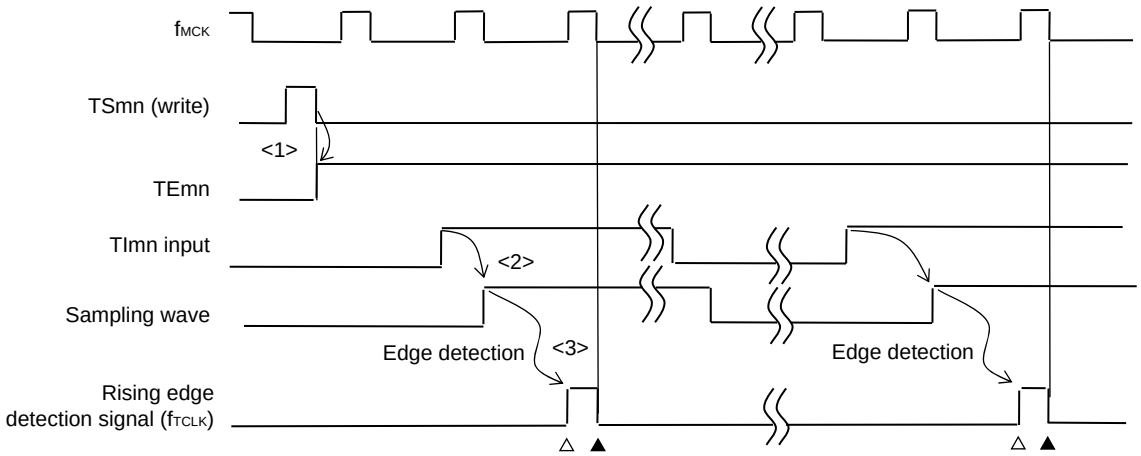

<1> Setting TSmn bit to 1 enables the timer to be started and to become wait state for valid edge of input signal via the TImn pin.

<2> The rise of input signal via the TImn pin is sampled by f_{MCK}.

<3> The edge is detected by the rising of the sampled signal and the detection signal (count clock) is output.

Remarks 1. △ : Rising edge of the count clock
▲ : Synchronization, increment/decrement of counter

2. f_{CLK}: CPU/peripheral hardware clock
f_{MCK}: Operation clock of channel n

3. The waveform of the TImn pin input signal, which is used for input pulse interval measurement, input signal of high/low width measurement, the delay counter, and one-shot pulse output, is the same as that shown in above figure.

6.5.2 Start timing of counter

Operation of timer count register mn (TCRmn) is enabled by setting of TSmn bit of timer channel start register m (TSm).

Operation from when counting is enabled to when timer count register mn (TCRmn) starts counting is shown in Table 6-6.

Table 6-6. Operations from Count Operation Enabled State to Timer count Register mn (TCRmn) Count Start

Timer operation mode	Operation when TSmn = 1 is set
● Interval timer mode	No operation is carried out from start trigger detection (TSmn=1) until count clock generation. The first count clock loads the value of the TDRmn register to the TCRmn register and the subsequent count clock performs count down operation (see **6.5.3 (1) Operation of interval timer mode**).
● Event counter mode	Writing 1 to the TSmn bit loads the value of the TDRmn register to the TCRmn register. If detect edge of TImn input. The subsequent count clock performs count down operation (see **6.5.3 (2) Operation of event counter mode**).
● Capture mode	No operation is carried out from start trigger detection (TSmn = 1) until count clock generation. The first count clock loads 0000H to the TCRmn register and the subsequent count clock performs count up operation (see **6.5.3 (3) Operation of capture mode (input pulse interval measurement)**).
● One-count mode	The waiting-for-start-trigger state is entered by writing 1 to the TSmn bit while the timer is stopped (TEmn = 0). No operation is carried out from start trigger detection until count clock generation. The first count clock loads the value of the TDRmn register to the TCRmn register and the subsequent count clock performs count down operation (see **6.5.3 (4) Operation of one-count mode**).
● Capture & one-count mode	The waiting-for-start-trigger state is entered by writing 1 to the TSmn bit while the timer is stopped (TEmn = 0). No operation is carried out from start trigger detection until count clock generation. The first count clock loads 0000H to the TCRmn register and the subsequent count clock performs count up operation (see **6.5.3 (5) Operation of capture & one-count mode (high-level width measurement)**).

6.5.3 Operation of counter

Here, the counter operation in each mode is explained.

(1) Operation of interval timer mode

<1> Operation is enabled (TEmn = 1) by writing 1 to the TSmn bit. Timer count register mn (TCRmn) holds the initial value until count clock generation.

<2> A start trigger is generated at the first count clock after operation is enabled.

<3> When the MDmn0 bit is set to 1, INTTMmn is generated by the start trigger.

<4> By the first count clock after the operation enable, the value of timer data register mn (TDRmn) is loaded to the TCRmn register and counting starts in the interval timer mode.

<5> When the TCRmn register counts down and its count value is 0000H, INTTMmn is generated and the value of timer data register mn (TDRmn) is loaded to the TCRmn register and counting keeps on.

Figure 6-27. Operation Timing (In Interval Timer Mode)

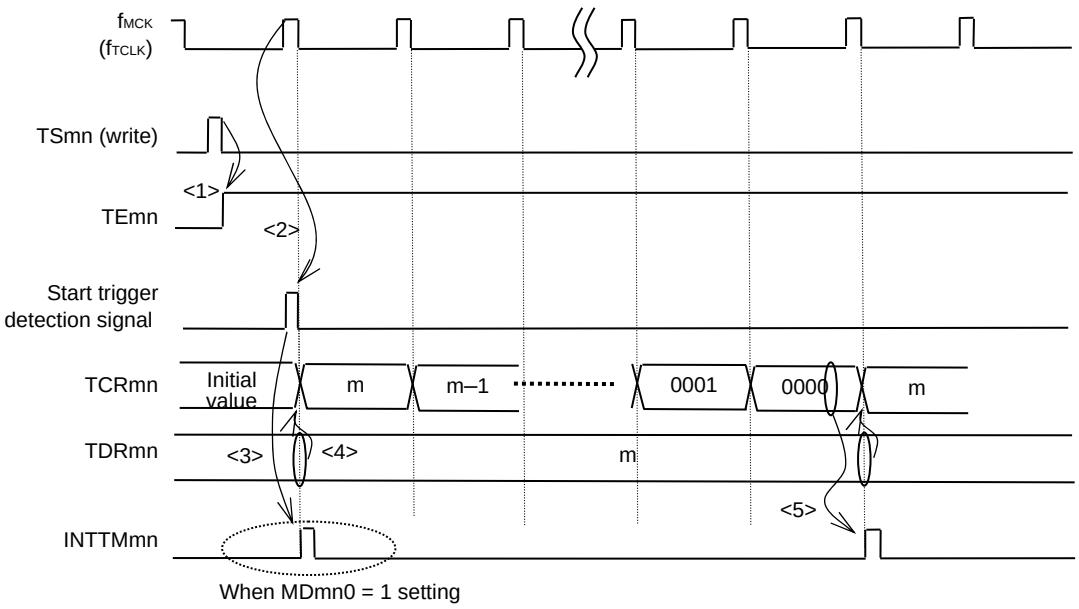

Caution In the operation in the first count clock cycle after writing the TSmn bit, an error at a maximum of one count clock cycle occurs since count start delays until count clock has been generated. When the information on count start timing is necessary, an interrupt can be generated when counting is started by setting MDmn0 = 1.

Remark f_{MCK}, the start trigger detection signal, and INTTMmn become active for one clock cycle in synchronization with f_{CLK}.

(2) Operation of event counter mode

<1> Timer count register mn (TCRmn) holds its initial value while operation is stopped (TEmn = 0).
<2> Operation is enabled (TEmn = 1) by writing 1 to the TSmn bit.
<3> As soon as 1 has been written to the TSmn bit and 1 has been set to the TEmn bit, the value of timer data register mn (TDRmn) is loaded to the TCRmn register to start counting.
<4> After that, the TCRmn register value is counted down according to the count clock of the valid edge of the TImn input.

Figure 6-28. Operation Timing (In Event Counter Mode)

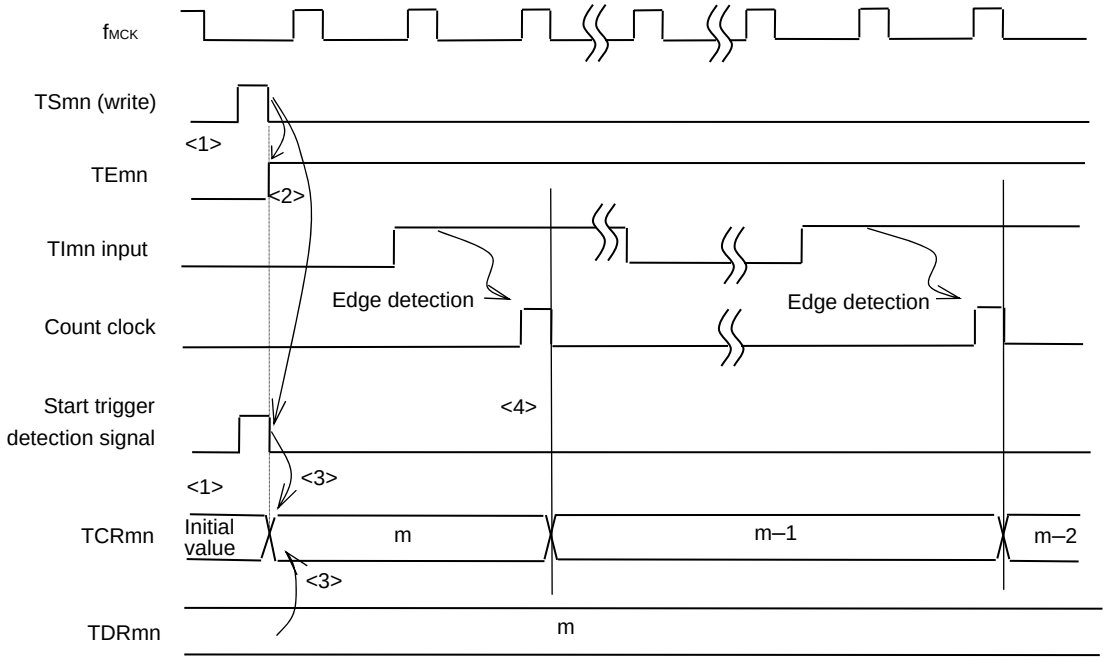

Remark The above figure indicates the timing when the noise filter is not used. When the noise filter is turned on, edge detection is delayed by 2 f_{MCK} cycles (it sums up to 3 to 4 cycles) from TImn input. The error per one cycle occurs because the TImn input is not synchronous with the count clock (f_{MCK}).

(3) Operation of capture mode (input pulse interval measurement)

<1> Operation is enabled (TEmn = 1) by writing 1 to the TSmn bit.
<2> Timer count register mn (TCRmn) holds the initial value until count clock generation.
<3> A start trigger is generated at the first count clock after operation is enabled. And the value of 0000H is loaded to the TCRmn register and counting starts in the capture mode. (When the MDmn0 bit is set to 1, INTTMmn is generated by the start trigger.)
<4> On detection of the valid edge of the TImn input, the value of the TCRmn register is captured to timer data register mn (TDRmn) and INTTMmn is generated. However, this capture value is no meaning. The TCRmn register keeps on counting from 0000H.
<5> On next detection of the valid edge of the TImn input, the value of the TCRmn register is captured to timer data register mn (TDRmn) and INTTMmn is generated.

Figure 6-29. Operation Timing (In Capture Mode: Input Pulse Interval Measurement)

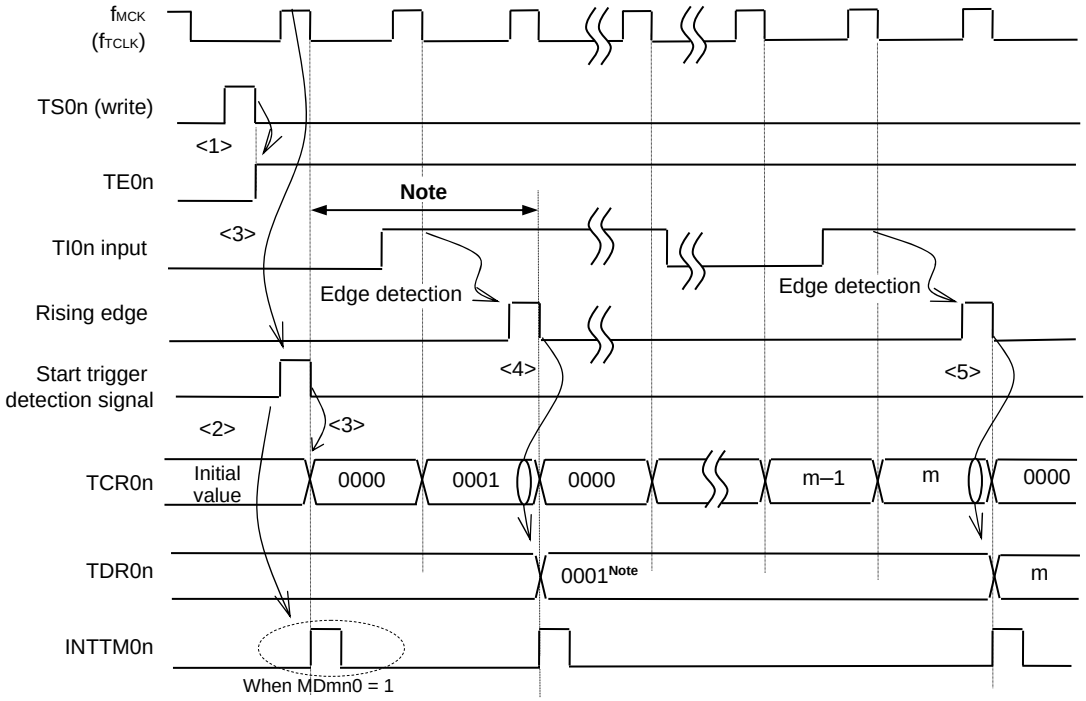

Note If a clock has been input to TImn (the trigger exists) when capturing starts, counting starts when a trigger is detected, even if no edge is detected. Therefore, the first captured value (<4>) does not determine a pulse interval (in the above figure, 0001 just indicates two clock cycles but does not determine the pulse interval) and so the user can ignore it.

Caution In the operation in the first count clock cycle after writing the TSmn bit, an error at a maximum of one count clock cycle occurs since count start delays until count clock has been generated. When the information on count start timing is necessary, an interrupt can be generated when counting is started by setting MDmn0 = 1.

Remark The above figure indicates the timing when the noise filter is not used. When the noise filter is turned on, edge detection is delayed by 2 f_{MCK} cycles (it sums up to 3 to 4 cycles) from TImn input. The error per one cycle occurs because the TImn input is not synchronous with the count clock (f_{MCK}).

(4) Operation of one-count mode

<1> Operation is enabled (TEmn = 1) by writing 1 to the TSmn bit.
<2> Timer count register mn (TCRmn) holds the initial value until start trigger generation.
<3> Rising edge of the TImn input is detected.
<4> On start trigger detection, the value of timer data register mn (TDRmn) is loaded to the TCRmn register and count starts.
<5> When the TCRmn register counts down and its count value is 0000H, INTTMmn is generated and the value of the TCRmn register becomes FFFFH and counting stops.

<R>

Figure 6-30. Operation Timing (In One-count Mode)

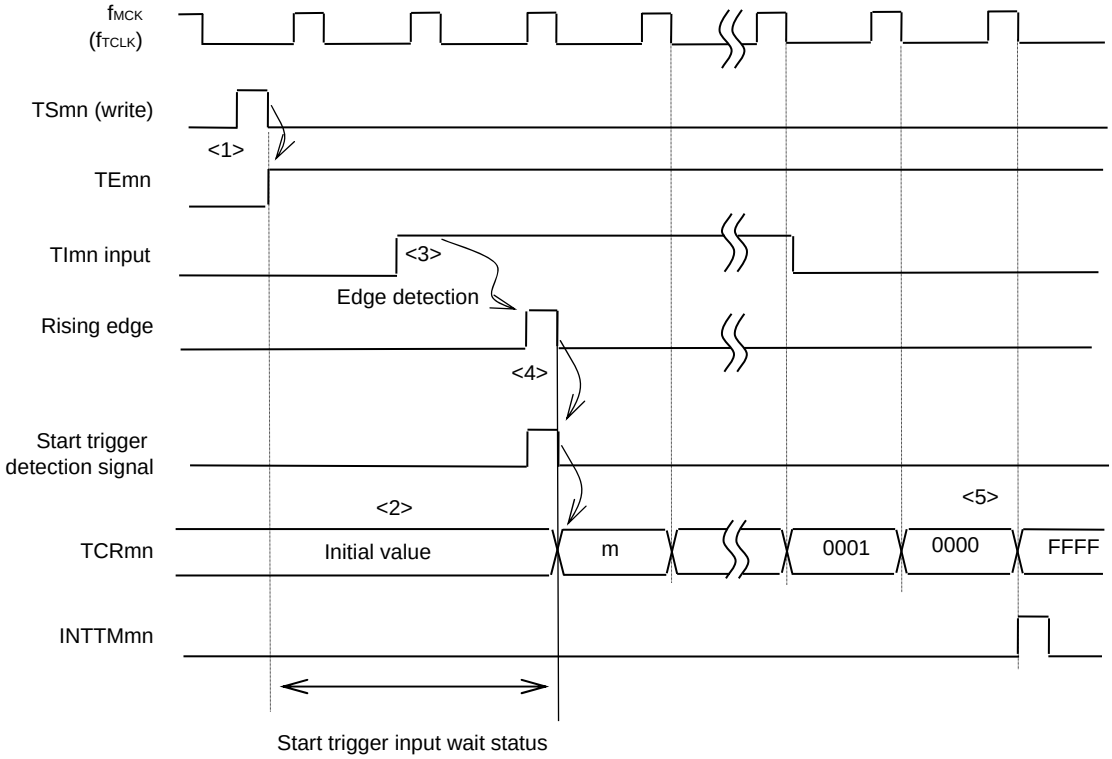

Remark The above figure indicates the timing when the noise filter is not used. When the noise filter is turned on, edge detection is delayed by 2 f_{MCK} cycles (it sums up to 3 to 4 cycles) from TImn input. The error per one cycle occurs because the TImn input is not synchronous with the count clock (f_{MCK}).

(5) Operation of capture & one-count mode (high-level width measurement)

<1> Operation is enabled (TEmn = 1) by writing 1 to the TSmn bit of timer channel start register m (TSm).
<2> Timer count register mn (TCRmn) holds the initial value until start trigger generation.
<3> Rising edge of the TImn input is detected.
<4> On start trigger detection, the value of 0000H is loaded to the TCRmn register and count starts.
<5> On detection of the falling edge of the TImn input, the value of the TCRmn register is captured to timer data register mn (TDRmn) and INTTMmn is generated.

Figure 6-31. Operation Timing (In Capture & One-count Mode: High-level Width Measurement)

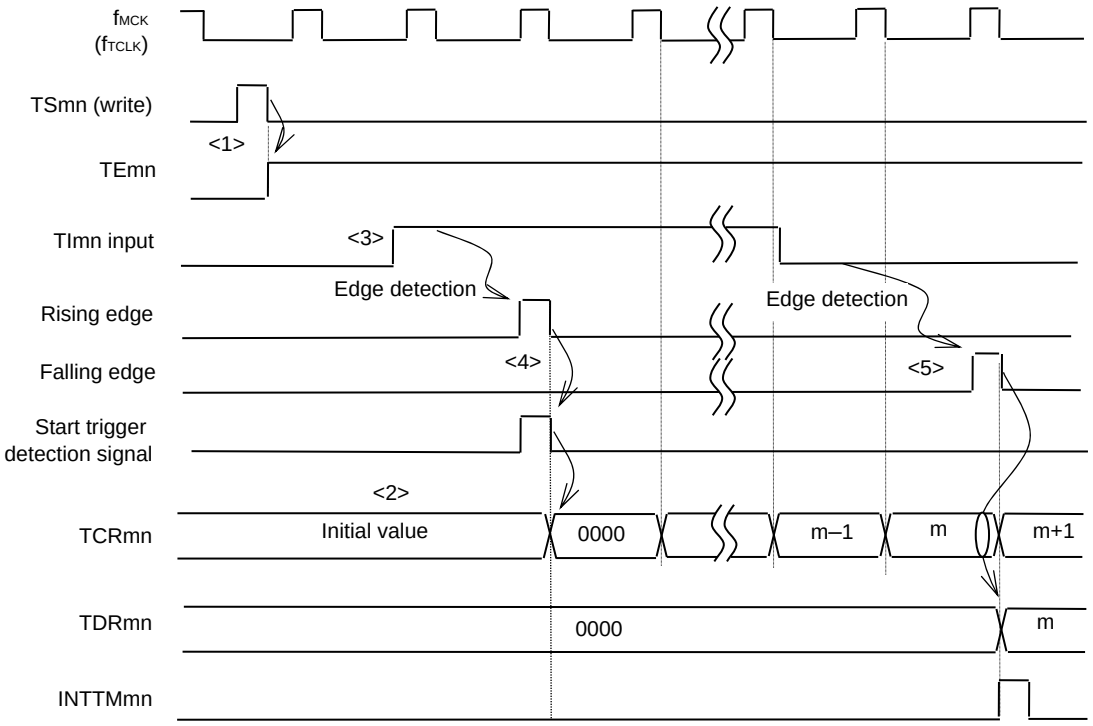

Remark The above figure indicates the timing when the noise filter is not used. When the noise filter is turned on, edge detection is delayed by 2 f_{MCK} cycles (it sums up to 3 to 4 cycles) from TImn input. The error per one cycle occurs because the TImn input is not synchronous with the count clock (f_{MCK}).

6.6 Channel Output (TOmn pin) Control

6.6.1 TOmn pin output circuit configuration

Figure 6-32. Output Circuit Configuration

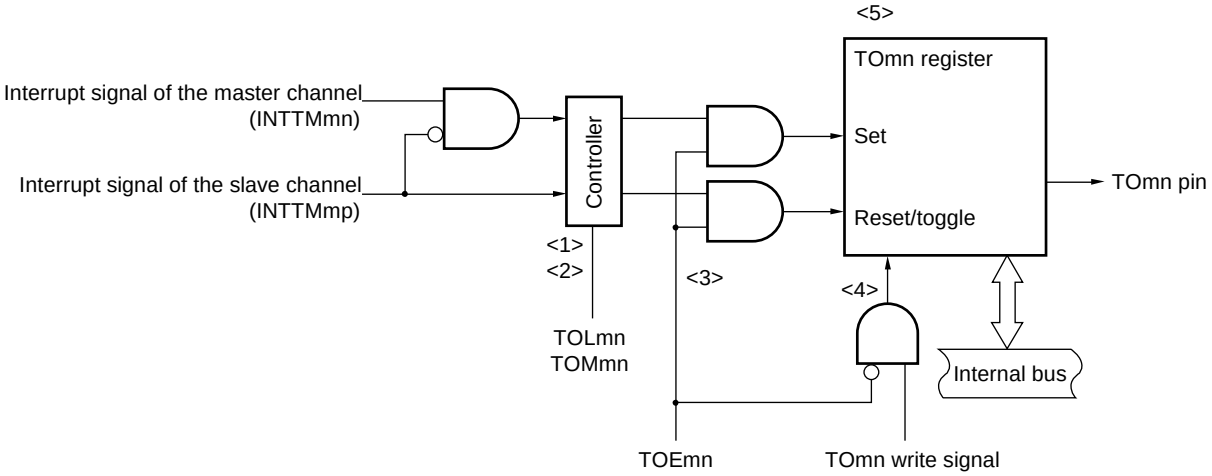

The following describes the TOmn pin output circuit.

<1> When TOMmn = 0 (master channel output mode), the set value of timer output level register m (TOLm) is ignored and only INTTM0p (slave channel timer interrupt) is transmitted to timer output register m (TOm).

<2> When TOMmn = 1 (slave channel output mode), both INTTMmn (master channel timer interrupt) and INTTM0p (slave channel timer interrupt) are transmitted to the TOm register.
At this time, the TOLm register becomes valid and the signals are controlled as follows:

When TOLmn = 0: Positive logic output (INTTMmn → set, INTTM0p → reset)
When TOLmn = 1: Negative logic output (INTTMmn → reset, INTTM0p → set)

When INTTMmn and INTTM0p are simultaneously generated, (0% output of PWM), INTTM0p (reset signal) takes priority, and INTTMmn (set signal) is masked.

<3> While timer output is enabled (TOEmn = 1), INTTMmn (master channel timer interrupt) and INTTM0p (slave channel timer interrupt) are transmitted to the TOm register. Writing to the TOm register (TOmn write signal) becomes invalid.
When TOEmn = 1, the TOmn pin output never changes with signals other than interrupt signals.
To initialize the TOmn pin output level, it is necessary to set timer operation is stopped (TOEmn = 0) and to write a value to the TOm register.

<4> While timer output is disabled (TOEmn = 0), writing to the TOmn bit to the target channel (TOmn write signal) becomes valid. When timer output is disabled (TOEmn = 0), neither INTTMmn (master channel timer interrupt) nor INTTM0p (slave channel timer interrupt) is transmitted to the TOm register.

<5> The TOm register can always be read, and the TOmn pin output level can be checked.

Caution Since outputs are N-ch open-drain outputs, an external pull-up resistor is required to use P60 and P61 as channel output.

Remark m: Unit number (m = 0)
n: Channel number
n = 0 to 7 (n = 0, 2, 4, 6 for master channel)
p: Slave channel number
n < p ≤ 7

6.6.2 TOmn pin output setting

The following figure shows the procedure and status transition of the TOmn output pin from initial setting to timer operation start.

Figure 6-33. Status Transition from Timer Output Setting to Operation Start

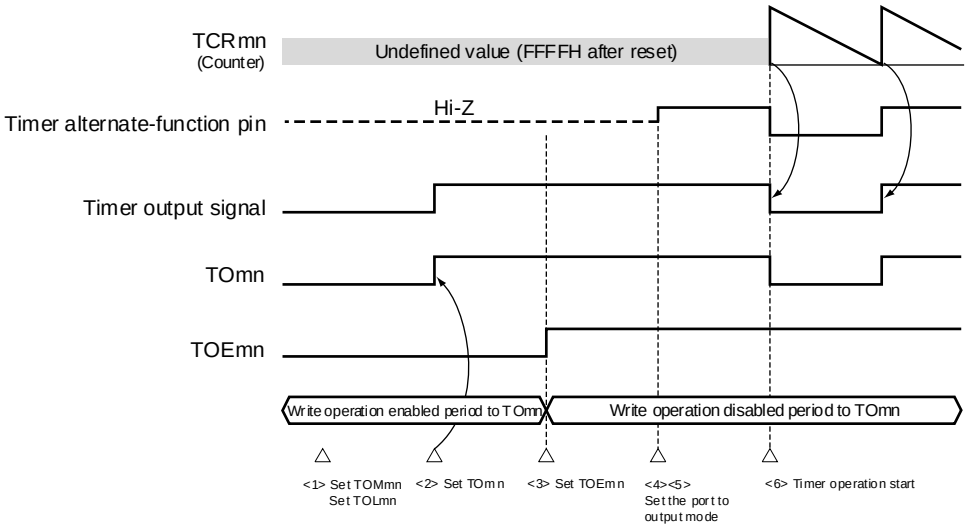

<1> The operation mode of timer output is set.

- TOMmn bit (0: Master channel output mode, 1: Slave channel output mode)
- TOLmn bit (0: Positive logic output, 1: Negative logic output)

<2> The timer output signal is set to the initial status by setting timer output register m (TOm).
<3> The timer output operation is enabled by writing 1 to the TOEmn bit (writing to the TOm register is disabled).
<4> The port is set to digital I/O by port mode control register (PMCxx).
<5> The port I/O setting is set to output (see **6.3.16 Registers controlling port functions of pins to be used for timer I/O**).
<6> The timer operation is enabled (TSmn = 1).

Remark m: Unit number (m = 0), n: Channel number (n = 0 to 7)

6.6.3 Cautions on channel output operation

(1) Changing values set in the registers TOm, TOEm, and TOLm during timer operation

Since the timer operations (operations of timer count register mn (TCRmn) and timer data register mn (TDRmn)) are independent of the TOmn output circuit and changing the values set in timer output register m (TOm), timer output enable register m (TOEm), and timer output level register m (TOLm) does not affect the timer operation, the values can be changed during timer operation. To output an expected waveform from the TOmn pin by timer operation, however, set the TOm, TOEm, TOLm, and TOMm registers to the values stated in the register setting example of each operation shown by 6.8 and 6.9.

When the values set to the TOEm, and TOMm registers (but not the TOm register) are changed close to the occurrence of the timer interrupt (INTTMmn) of each channel, the waveform output to the TOmn pin might differ, depending on whether the values are changed immediately before or immediately after the timer interrupt (INTTMmn) occurs.

Remark m: Unit number (m = 0), n: Channel number (n = 0 to 7)

(2) Default level of TOmn pin and output level after timer operation start

The change in the output level of the TOmn pin when timer output register m (TOm) is written while timer output is disabled (TOEmn = 0), the initial level is changed, and then timer output is enabled (TOEmn = 1) before port output is enabled, is shown below.

(a) When operation starts with master channel output mode (TOMmn = 0) setting

The setting of timer output level register m (TOLm) is invalid when master channel output mode (TOMmn = 0). When the timer operation starts after setting the default level, the toggle signal is generated and the output level of the TOmn pin is reversed.

Figure 6-34. TOmn Pin Output Status at Toggle Output (TOMmn = 0)

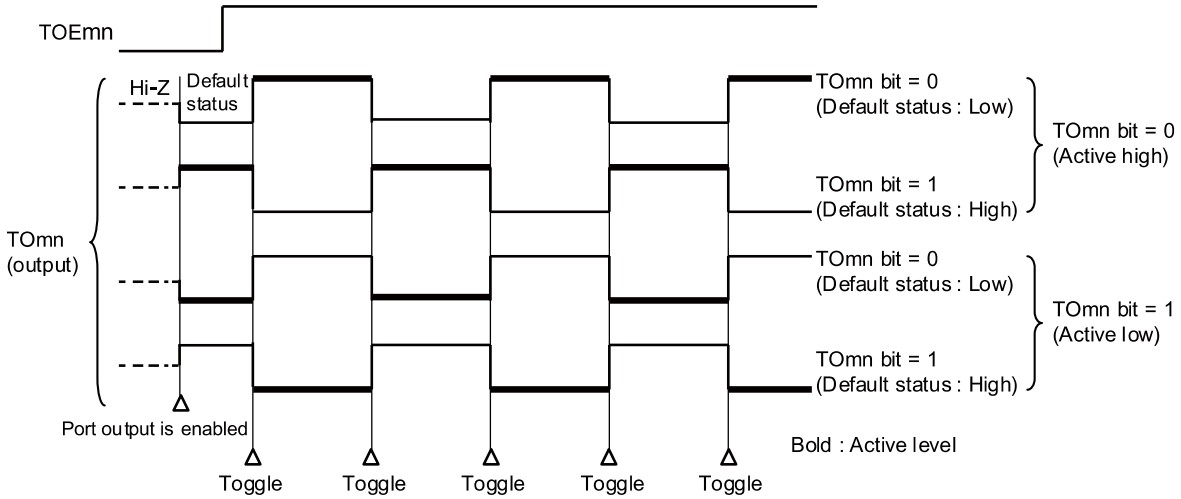

Remarks 1. Toggle: Reverse TOmn pin output status

2. m: Unit number (m = 0), n: Channel number (n = 0 to 7)

(b) When operation starts with slave channel output mode (TOMmp = 1) setting (PWM output))

When slave channel output mode (TOMmp = 1), the active level is determined by timer output level register m (TOLm) setting.

Figure 6-35. TOmp Pin Output Status at PWM Output (TOMmp = 1)

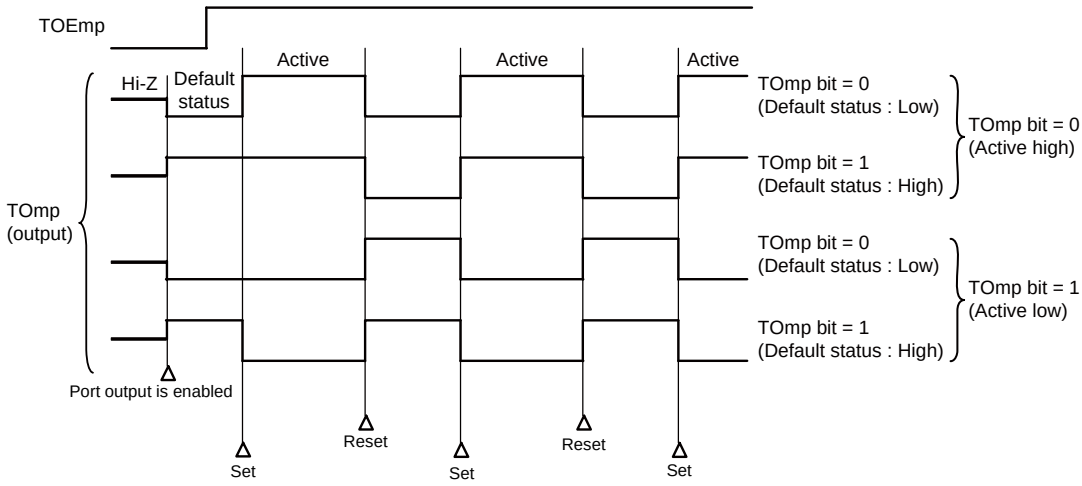

Remarks 1. Set: The output signal of the TOmp pin changes from inactive level to active level.
Reset: The output signal of the TOmp pin changes from active level to inactive level.

2. m: Unit number (m = 0), p: Channel number (p = 1 to 7)

(3) Operation of TOmn pin in slave channel output mode (TOMmn = 1)

(a) When timer output level register m (TOLm) setting has been changed during timer operation

When the TOLm register setting has been changed during timer operation, the setting becomes valid at the generation timing of the TOmn pin change condition. Rewriting the TOLm register does not change the output level of the TOmn pin.

The operation when TOMmn is set to 1 and the value of the TOLm register is changed while the timer is operating (TEmn = 1) is shown below.

Figure 6-36. Operation when TOLm Register Has Been Changed Contents during Timer Operation

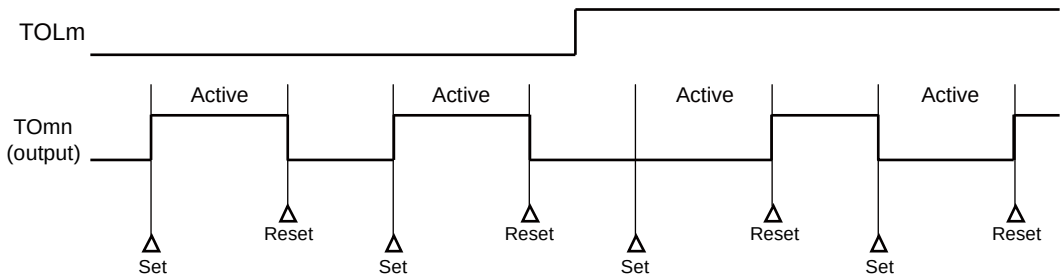

Remarks 1. Set: The output signal of the TOmn pin changes from inactive level to active level.
Reset: The output signal of the TOmn pin changes from active level to inactive level.

2. m: Unit number (m = 0), n: Channel number (n = 0 to 7)

(b) Set/reset timing

To realize 0%/100% output at PWM output, the TOmn pin/TOmn bit set timing at master channel timer interrupt (INTTMmn) generation is delayed by 1 count clock by the slave channel.

If the set condition and reset condition are generated at the same time, a higher priority is given to the latter.

Figure 6-37 shows the set/reset operating statuses where the master/slave channels are set as follows.

Master channel: TOEmn = 1, TOMmn = 0, TOLmn = 0
Slave channel: TOEmp = 1, TOMmp = 1, TOLmp = 0

Figure 6-37. Set/Reset Timing Operating Statuses

(1) Basic operation timing

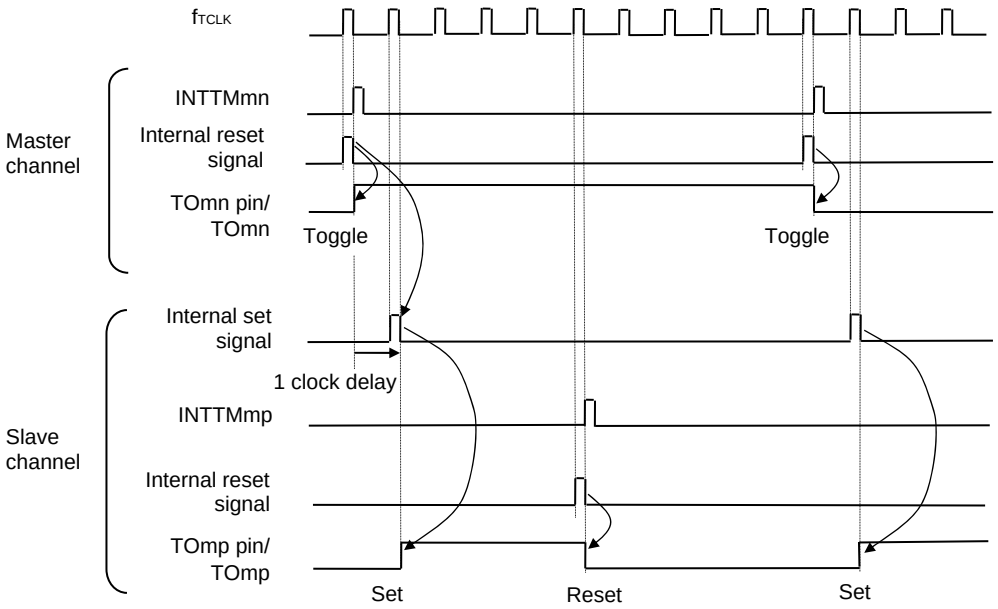

(2) Operation timing when 0 % duty

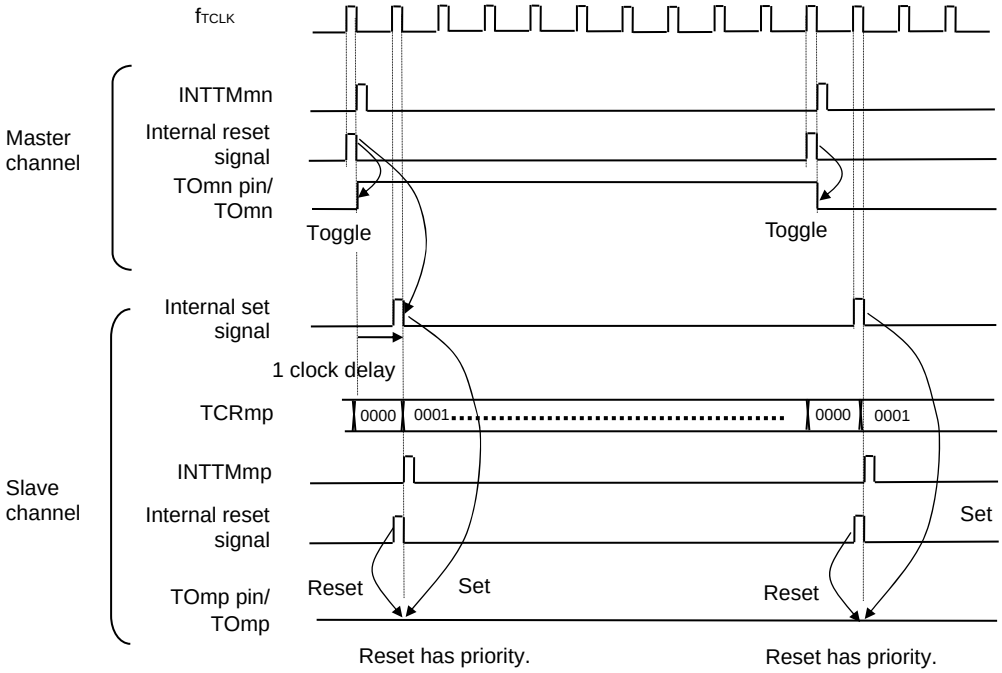

Remarks 1. Internal reset signal: TOmn pin reset/toggle signal
Internal set signal: TOmn pin set signal

2. m: Unit number (m = 0)
n: Channel number
n = 0 to 7 (n = 0, 2, 4, 6 for master channel)
p: Slave channel number
n < p ≤ 7

6.6.4 Collective manipulation of TOmn bit

In timer output register m (TOm), the setting bits for all the channels are located in one register in the same way as timer channel start register m (TSm). Therefore, the TOmn bit of all the channels can be manipulated collectively.

Only the desired bits can also be manipulated by enabling writing only to the TOmn bits (TOEmn = 0) that correspond to the relevant bits of the channel used to perform output (TOmn).

Figure 6-38 Example of TO0n Bit Collective Manipulation

Before writing

TO0	0	0	0	0	0	0	0	0	TO07 0	TO06 0	TO05 1	TO04 0	TO03 0	TO02 0	TO01 1	TO00 0
TOE0	0	0	0	0	0	0	0	0	TOE07 0	TOE06 0	TOE05 1	TOE04 0	TOE03 1	TOE02 1	TOE01 1	TOE00 1

Data to be written

	0	0	0	0	0	0	0	0	1	1	0	0	0	0	1	1

After writing

TO0	0	0	0	0	0	0	0	0	TO07 1	TO06 1	TO05 1	TO04 0	TO03 0	TO02 0	TO01 1	TO00 0

Writing is done only to the TOmn bit with TOEmn = 0, and writing to the TOmn bit with TOEmn = 1 is ignored.

TOmn (channel output) to which TOEmn = 1 is set is not affected by the write operation. Even if the write operation is done to the TOmn bit, it is ignored and the output change by timer operation is normally done.

Figure 6-39. TO0n Pin Statuses by Collective Manipulation of TO0n Bit

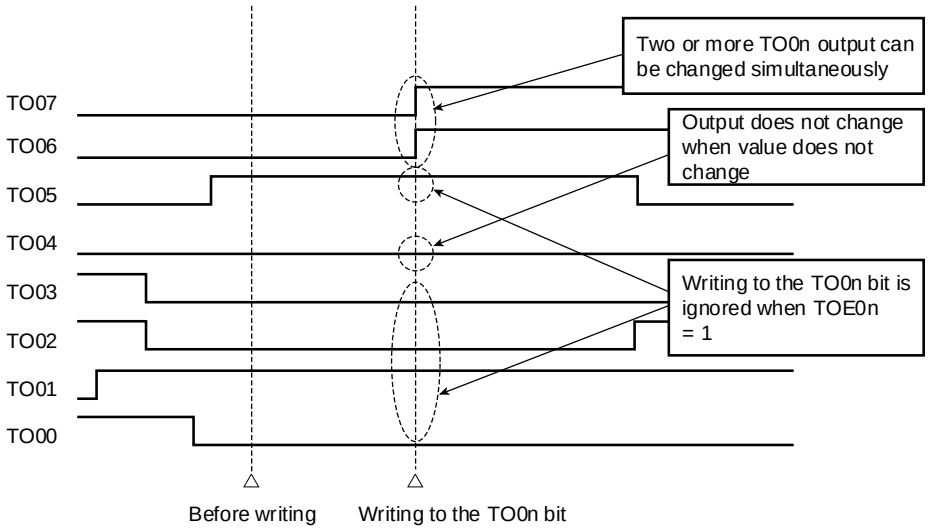

Remark m: Unit number (m = 0), n: Channel number (n = 0 to 7)

6.6.5 Timer interrupt and TOmn pin output at operation start

In the interval timer mode or capture mode, the MDmn0 bit in timer mode register mn (TMRmn) sets whether or not to generate a timer interrupt at count start.

When MDmn0 is set to 1, the count operation start timing can be known by the timer interrupt (INTTMmn) generation.

In the other modes, neither timer interrupt at count operation start nor TOmn output is controlled.

Figure 6-40 shows operation examples when the interval timer mode (TOEmn = 1, TOMmn = 0) is set.

Figure 6-40. Operation Examples of Timer Interrupt at Count Operation Start and TOmn Output

(a) When MDmn0 is set to 1

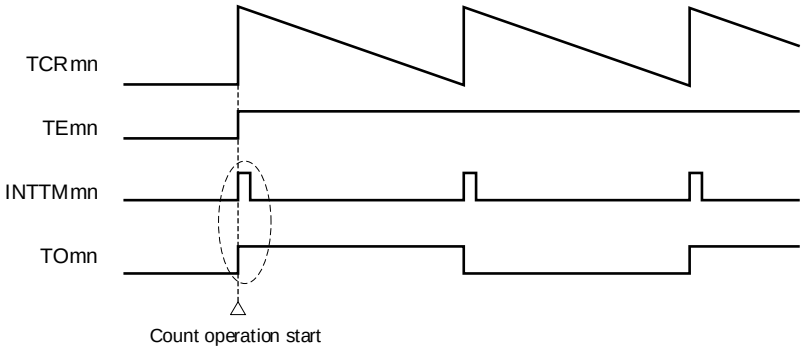

(b) When MDmn0 is set to 0

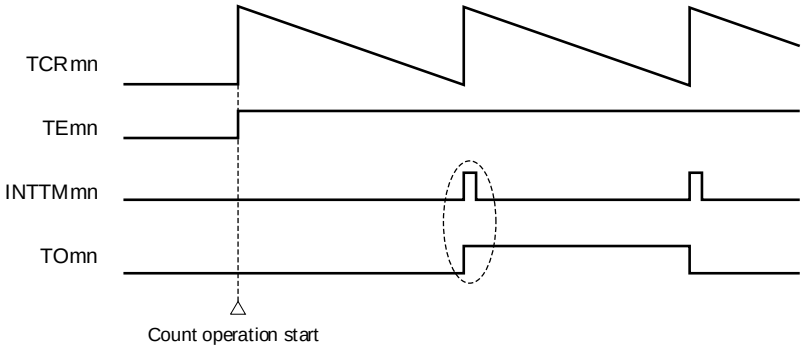

When MDmn0 is set to 1, a timer interrupt (INTTMmn) is output at count operation start, and TOmn performs a toggle operation.

When MDmn0 is set to 0, a timer interrupt (INTTMmn) is not output at count operation start, and TOmn does not change either. After counting one cycle, INTTMmn is output and TOmn performs a toggle operation.

Remark m: Unit number (m = 0), n: Channel number (n = 0 to 7)

6.7 Timer Input (TImn) Control

6.7.1 TImn input circuit configuration

A signal is input from a timer input pin, goes through a noise filter and an edge detector, and is sent to a timer controller. Enable the noise filter for the pin in need of noise removal. The following shows the configuration of the input circuit.

Figure 6-41. Input Circuit Configuration

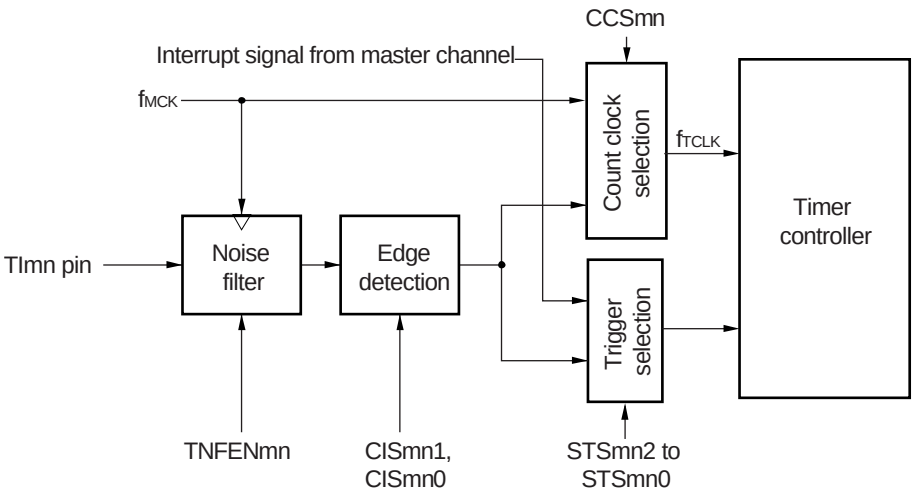

6.7.2 Noise filter

When the noise filter is disabled, the input signal is only synchronized with the operating clock (f_{MCK}) for channel n. When the noise filter is enabled, after synchronization with the operating clock (f_{MCK}) for channel n, whether the signal keeps the same value for two clock cycles is detected. The following shows differences in waveforms output from the noise filter between when the noise filter is enabled and disabled.

Figure 6-42. Sampling Waveforms through TImn Input Pin with Noise Filter Enabled and Disabled

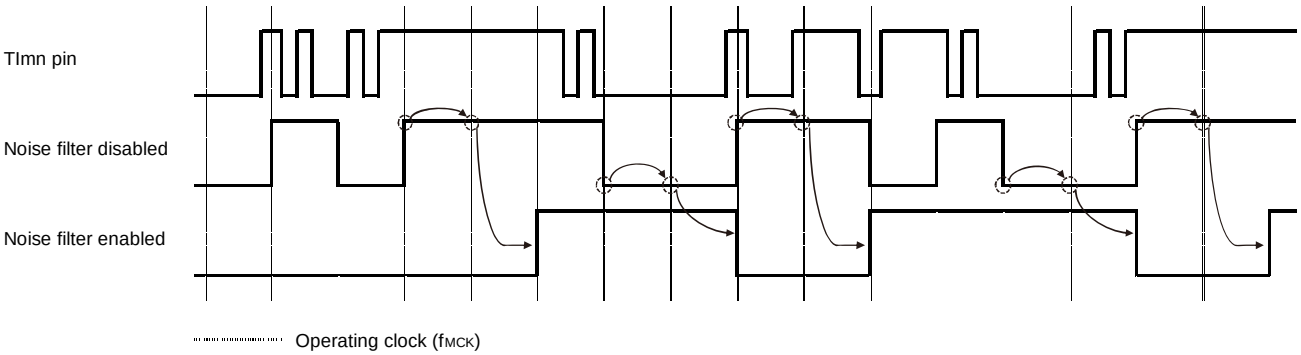

Caution The TImn pin input waveform is shown to explain the noise filter ON/OFF operation. For actual operation, refer to the high-level width/low-level width in 32.4 or 33.4 AC Characteristics.

6.7.3 Cautions on channel input operation

When a timer input pin is set as unused, the operating clock is not supplied to the noise filter. Therefore, after settings are made to use the timer input pin, the following wait time is necessary before a trigger is specified to enable operation of the channel corresponding to the timer input pin.

(1) Noise filter is disabled
When bits 12 (CCSmn), 9 (STSmn1), and 8 (STSmn0) in the timer mode register mn (TMRmn) are 0 and then one of them is set to 1, wait for at least two cycles of the operating clock (f_{MCK}), and then set the operation enable trigger bit in the timer channel start register (TSm).

(2) Noise filter is enabled
When bits 12 (CCSmn), 9 (STSmn1), and 8 (STSmn0) in the timer mode register mn (TMRmn) are all 0 and then one of them is set to 1, wait for at least four cycles of the operating clock (f_{MCK}), and then set the operation enable trigger bit in the timer channel start register (TSm).

6.8 Independent Channel Operation Function of Timer Array Unit

6.8.1 Operation as interval timer/square wave output

(1) Interval timer

The timer array unit can be used as a reference timer that generates INTTMmn (timer interrupt) at fixed intervals.
The interrupt generation period can be calculated by the following expression.

Generation period of INTTMmn (timer interrupt) = Period of count clock × (Set value of TDRmn + 1)

(2) Operation as square wave output

TOmn performs a toggle operation as soon as INTTMmn has been generated, and outputs a square wave with a duty factor of 50%.
The period and frequency for outputting a square wave from TOmn can be calculated by the following expressions.

● Period of square wave output from TOmn = Period of count clock × (Set value of TDRmn + 1) × 2
● Frequency of square wave output from TOmn = Frequency of count clock/{(Set value of TDRmn + 1) × 2}

Timer count register mn (TCRmn) operates as a down counter in the interval timer mode.
The TCRmn register loads the value of timer data register mn (TDRmn) at the first count clock after the channel start trigger bit (TSmn, TSHm1, TSHm3) of timer channel start register m (TSm) is set to 1. If the MDmn0 bit of timer mode register mn (TMRmn) is 0 at this time, INTTMmn is not output and TOmn is not toggled. If the MDmn0 bit of the TMRmn register is 1, INTTMmn is output and TOmn is toggled.
After that, the TCRmn register count down in synchronization with the count clock.
When TCRmn = 0000H, INTTMmn is output and TOmn is toggled at the next count clock. At the same time, the TCRmn register loads the value of the TDRmn register again. After that, the same operation is repeated.
The TDRmn register can be rewritten at any time. The new value of the TDRmn register becomes valid from the next period.

Remark m: Unit number (m = 0), n: Channel number (n = 0 to 7)

Figure 6-43. Block Diagram of Operation as Interval Timer/Square Wave Output

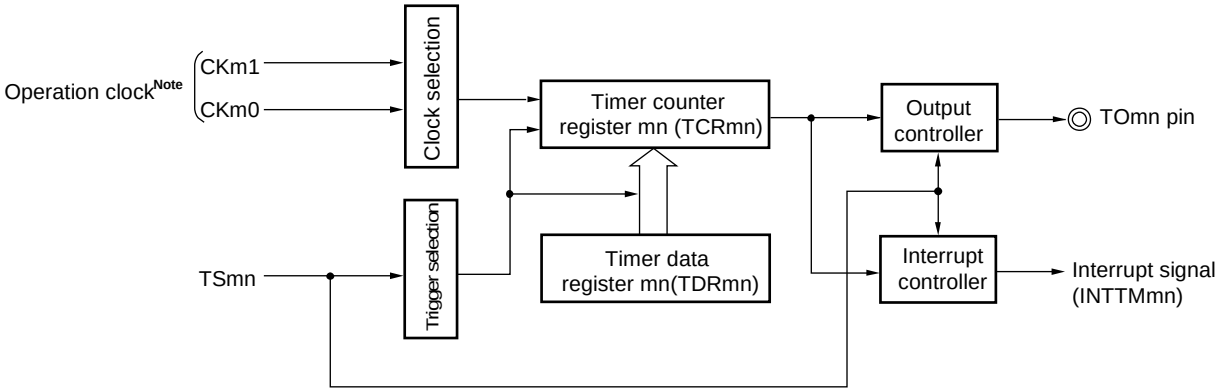

Note When channels 1 and 3, the clock can be selected from CKm0, CKm1, CKm2 and CKm3.

Figure 6-44. Example of Basic Timing of Operation as Interval Timer/Square Wave Output (MDmn0 = 1)

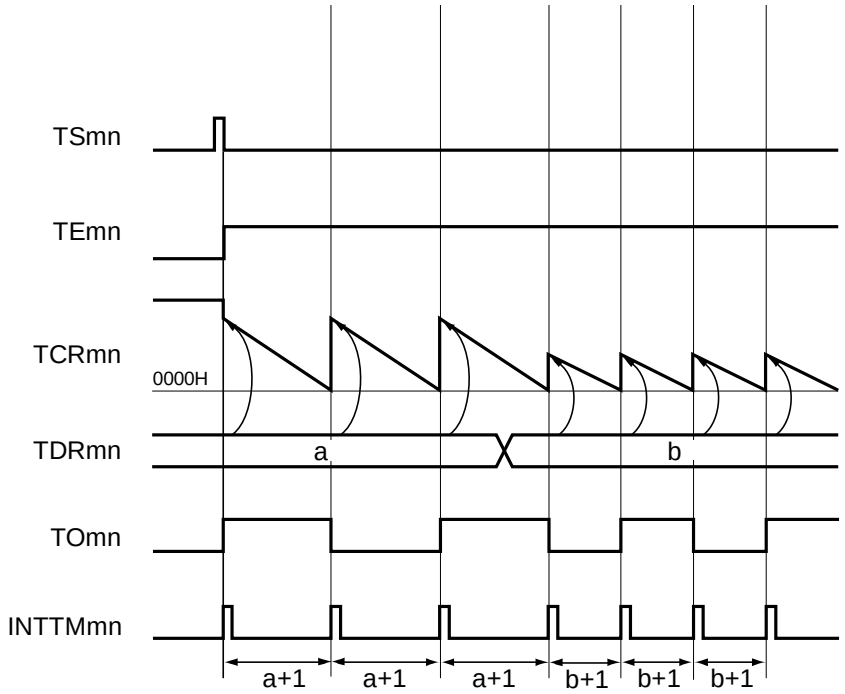

Remarks 1. m: Unit number (m = 0), n: Channel number (n = 0 to 7)

2. TSmn: Bit n of timer channel start register m (TSm)

TEmn: Bit n of timer channel enable status register m (TEm)

TCRmn: Timer count register mn (TCRmn)

TDRmn: Timer data register mn (TDRmn)

TOmn: TOmn pin output signal

Figure 6-45. Example of Set Contents of Registers During Operation as Interval Timer/Square Wave Output (1/2)

(a) Timer mode register mn (TMRmn)

	15	14	13	12	11	10	9	8	7	6	5	4	3	2	1	0
TMRmn	CKSmn1	CKSmn0		CCSmn	M/S[Note]	STSmn2	STSmn1	STSmn0	CISmn1	CISmn0			MDmn3	MDmn2	MDmn1	MDmn0
	1/0	1/0	0	0	0/1	0	0	0	0	0	0	0	0	0	0	1/0

Operation mode of channel n
000B: Interval timer

Setting of operation when counting is started
0: Neither generates INTTMmn nor inverts timer output when counting is started.
1: Generates INTTMmn and inverts timer output when counting is started.

Selection of TImn pin input edge
00B: Sets 00B because these are not used.

Start trigger selection
000B: Selects only software start.

Setting of MASTERmn bit (channels 2, 4, 6)
0: Independent channel operation function.
Setting of SPLITmn bit (channels 1, 3)
0: 16-bit timer mode
1: 8-bit timer mode

Count clock selection
0: Selects operation clock (f_{MCK}).

Operation clock (f_{MCK}) selection
00B: Selects CKm0 as operation clock of channel n.
10B: Selects CKm1 as operation clock of channel n.
01B: Selects CKm2 as operation clock of channels 1, 3 (This can only be selected channels 1 and 3).
11B: Selects CKm3 as operation clock of channels 1, 3 (This can only be selected channels 1 and 3).

(b) Timer output register m (TOm)

	Bit n
TOm	TOmn
	1/0

0: Outputs 0 from TOmn.
1: Outputs 1 from TOmn.

(c) Timer output enable register m (TOEm)

	Bit n
TOEm	TOEmn
	1/0

0: Stops the TOmn output operation by counting operation.
1: Enables the TOmn output operation by counting operation.

Note TMRm2, TMRm4, TMRm6: MASTERmn bit
TMRm1, TMRm3: SPLITmn bit
TMRm0, TMRm5, TMRm7: Fixed to 0

Remark m: Unit number (m = 0), n: Channel number (n = 0 to 7)

Figure 6-45. Example of Set Contents of Registers During Operation as Interval Timer/Square Wave Output (2/2)

(d) Timer output level register m (TOLm)

	Bit n
TOLm	TOLmn
	0

0: Cleared to 0 when TOMmn = 0 (master channel output mode)

(e) Timer output mode register m (TOMm)

	Bit n
TOMm	TOMmn
	0

0: Sets master channel output mode.

Remark m: Unit number (m = 0), n: Channel number (n = 0 to 7)

Figure 6-46. Operation Procedure of Interval Timer/Square Wave Output Function (1/2)

	Software operation	Hardware status
TAU default setting		Power-off status (Clock supply is stopped and writing to each register is disabled.)
	Sets the TAUmEN bit of peripheral enable register 0 (PER0) to 1.	Power-on status. Each channel stops operating. (Clock supply is started and writing to each register is enabled.)
	Sets timer clock select register m (TPSm). Determines clock frequencies of CKm0 to CKm3.	
Channel default setting	Sets timer mode register mn (TMRmn) (determines operation mode of channel). Sets interval (period) value to timer data register mn (TDRmn).	Channel stops operating. (Clock is supplied and some power is consumed.)
	To use the TOmn output Clears the TOMmn bit of timer output mode register m (TOMm) to 0 (master channel output mode). Clears the TOLmn bit to 0. Sets the TOmn bit and determines default level of the TOmn output.	The TOmn pin goes into Hi-Z output state. The TOmn default setting level is output when the port mode register is in the output mode and the port register is 0.
	Sets the TOEmn bit to 1 and enables operation of TOmn.	TOmn does not change because channel stops operating.
	Clears the port register and port mode register to 0.	The TOmn pin outputs the TOmn set level.
Operation start	(Sets the TOEmn bit to 1 only if using TOmn output and resuming operation.). Sets the TSmn (TSHm1, TSHm3) bit to 1. The TSmn (TSHm1, TSHm3) bit automatically returns to 0 because it is a trigger bit.	TEmn (TEHm1, TEHm3) = 1, and count operation starts. Value of the TDRmn register is loaded to timer count register mn (TCRmn) at the count clock input. INTTMmn is generated and TOmn performs toggle operation if the MDmn0 bit of the TMRmn register is 1.
During operation	Set value of the TDRmn register can be changed. The TCRmn register can always be read. The TSRmn register is not used. Set values of the TOm and TOEm registers can be changed. Set values of the TMRmn register, TOMmn, and TOLmn bits cannot be changed.	Counter (TCRmn) counts down. When count value reaches 0000H, the value of the TDRmn register is loaded to the TCRmn register again and the count operation is continued. By detecting TCRmn = 0000H, INTTMmn is generated and TOmn performs toggle operation. After that, the above operation is repeated.
Operation stop	The TTmn (TTHm1, TTHm3) bit is set to 1. The TTmn (TTHm1, TTHm3) bit automatically returns to 0 because it is a trigger bit.	TEmn (TEHm1, TEHm3), and count operation stops. The TCRmn register holds count value and stops. The TOmn output is not initialized but holds current status.
	The TOEmn bit is cleared to 0 and value is set to the TOmn bit.	The TOmn pin outputs the TOmn bit set level.

Operation is resumed.

(**Remark** is listed on the next page.)

Figure 6-46. Operation Procedure of Interval Timer/Square Wave Output Function (2/2)

	Software operation	Hardware status
TAU stop	To hold the TOmn pin output level Clears the TOmn bit to 0 after the value to be held is set to the port register. →	The TOmn pin output level is held by port function.
	When holding the TOmn pin output level is not necessary Setting not required.	
	The TAUmEN bit of the PER0 register is cleared to 0. →	Power-off status All circuits are initialized and SFR of each channel is also initialized. (The TOmn bit is cleared to 0 and the TOmn pin is set to port mode.)

Remark m: Unit number (m = 0), n: Channel number (n = 0 to 7)

6.8.2 Operation as external event counter

The timer array unit can be used as an external event counter that counts the number of times the valid input edge (external event) is detected in the TImn pin. When a specified count value is reached, the event counter generates an interrupt. The specified number of counts can be calculated by the following expression.

Specified number of counts = Set value of TDRmn + 1

Timer count register mn (TCRmn) operates as a down counter in the event counter mode.

The TCRmn register loads the value of timer data register mn (TDRmn) by setting any channel start trigger bit (TSmn, TSHm1, TSHm3) of timer channel start register m (TSm) to 1.

The TCRmn register counts down each time the valid input edge of the TImn pin has been detected. When TCRmn = 0000H, the TCRmn register loads the value of the TDRmn register again, and outputs INTTMmn.

After that, the above operation is repeated.

An irregular waveform that depends on external events is output from the TOmn pin. Stop the output by setting the TOEmn bit of timer output enable register m (TOEm) to 0.

The TDRmn register can be rewritten at any time. The new value of the TDRmn register becomes valid during the next count period.

Figure 6-47. Block Diagram of Operation as External Event Counter

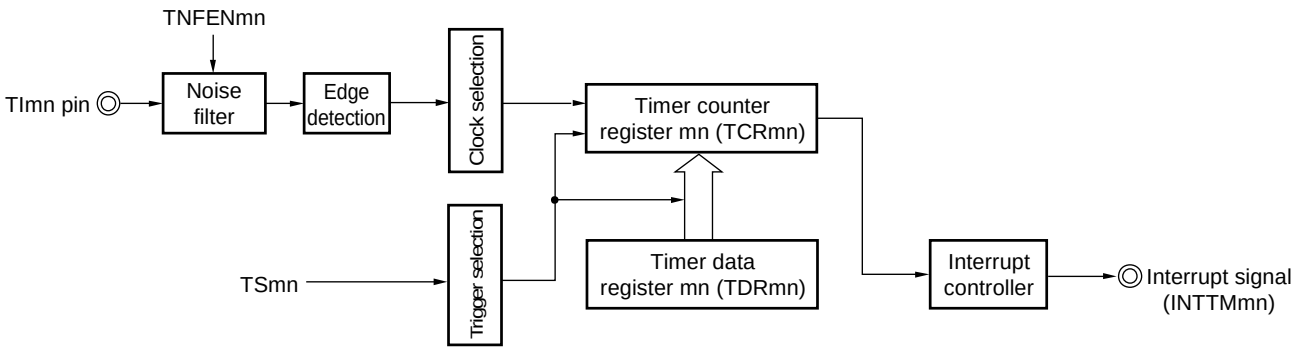

Remark m: Unit number (m = 0), n: Channel number (n = 0 to 7)

Figure 6-48. Example of Basic Timing of Operation as External Event Counter

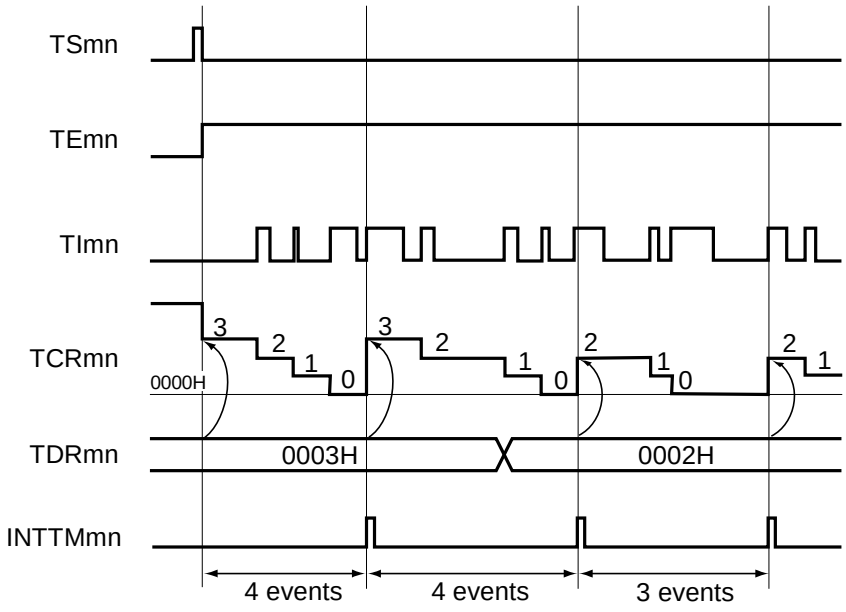

Remarks 1. m: Unit number (m = 0), n: Channel number (n = 0 to 7)

2. TSmn: Bit n of timer channel start register m (TSm)

TEmn: Bit n of timer channel enable status register m (TEm)

TImn: TImn pin input signal

TCRmn: Timer count register mn (TCRmn)

TDRmn: Timer data register mn (TDRmn)

Figure 6-49. Example of Set Contents of Registers in External Event Counter Mode (1/2)

(a) Timer mode register mn (TMRmn)

	15	14	13	12	11	10	9	8	7	6	5	4	3	2	1	0
TMRmn	CKSmn1	CKSmn0		CCSmn	M/S[Note]	STSmn2	STSmn1	STSmn0	CISmn1	CISmn0			MDmn3	MDmn2	MDmn1	MDmn0
	1/0	1/0	0	1	0/1	0	0	0	1/0	1/0	0	0	0	1	1	0

Operation mode of channel n
011B: Event count mode

Setting of operation when counting is started
0: Neither generates INTTMmn nor inverts timer output when counting is started.

Selection of TImn pin input edge
00B: Detects falling edge.
01B: Detects rising edge.
10B: Detects both edges.
11B: Setting prohibited

Start trigger selection
000B: Selects only software start.

Setting of MASTERmn bit (channels 2, 4, 6)
0: Independent channel operation function.
Setting of SPLITmn bit (channels 1, 3)
0: 16-bit timer mode
1: 8-bit timer mode

Count clock selection
1: Selects the TImn pin input valid edge.

Operation clock (f_{MCK}) selection
00B: Selects CKm0 as operation clock of channel n.
10B: Selects CKm1 as operation clock of channel n.
01B: Selects CKm2 as operation clock of channels 1, 3 (This can only be selected channels 1 and 3).
11B: Selects CKm3 as operation clock of channels 1, 3 (This can only be selected channels 1 and 3).

(b) Timer output register m (TOm)

	Bit n
TOm	TOmn
	0

0: Outputs 0 from TOmn.

(c) Timer output enable register m (TOEm)

	Bit n
TOEm	TOEmn
	0

0: Stops the TOmn output operation by counting operation.

Note TMRm2, TMRm4, TMRm6: MASTERmn bit
TMRm1, TMRm3: SPLITmn bit
TMRm0, TMRm5, TMRm7: Fixed to 0

Remark m: Unit number (m = 0), n: Channel number (n = 0 to 7)

Figure 6-49. Example of Set Contents of Registers in External Event Counter Mode (2/2)

(d) Timer output level register m (TOLm)

	Bit n
TOLm	TOLmn
	0

0: Cleared to 0 when TOMmn = 0 (master channel output mode).

(e) Timer output mode register m (TOMm)

	Bit n
TOMm	TOMmn
	0

0: Sets master channel output mode.

Remark m: Unit number (m = 0), n: Channel number (n = 0 to 7)

Figure 6-50. Operation Procedure When External Event Counter Function Is Used

	Software operation	Hardware status
TAU default setting		Power-off status (Clock supply is stopped and writing to each register is disabled.)
	Sets the TAUmEN bit of peripheral enable register 0 (PER0) to 1. →	Power-on status. Each channel stops operating. (Clock supply is started and writing to each register is enabled.)
	Sets timer clock select register m (TPSm). Determines clock frequencies of CKm0 to CKm3.	
Channel default setting	Sets the corresponding bit of the noise filter enable register 1 (NFEN1) to 0 (off) or 1 (on). Sets timer mode register mn (TMRmn) (determines operation mode of channel). Sets number of counts to timer data register mn (TDRmn). Clears the TOEmn bit of timer output enable register m (TOEm) to 0.	Channel stops operating. (Clock is supplied and some power is consumed.)
Operation start	Sets the TSmn bit to 1. → The TSmn bit automatically returns to 0 because it is a trigger bit.	TEmn = 1, and count operation starts. Value of the TDRmn register is loaded to timer count register mn (TCRmn) and detection of the TImn pin input edge is awaited.
During operation	Set value of the TDRmn register can be changed. The TCRmn register can always be read. The TSRmn register is not used. Set values of the TMRmn register, TOMmn, TOLmn, TOmn, and TOEmn bits cannot be changed.	Counter (TCRmn) counts down each time input edge of the TImn pin has been detected. When count value reaches 0000H, the value of the TDRmn register is loaded to the TCRmn register again, and the count operation is continued. By detecting TCRmn = 0000H, the INTTMmn output is generated. After that, the above operation is repeated.
Operation stop	The TTmn bit is set to 1. → The TTmn bit automatically returns to 0 because it is a trigger bit.	TEmn = 0, and count operation stops. The TCRmn register holds count value and stops.
TAU stop	The TAUmEN bit of the PER0 register is cleared to 0. →	Power-off status All circuits are initialized and SFR of each channel is also initialized.

Operation is resumed.

Remark m: Unit number (m = 0), n: Channel number (n = 0 to 7)

6.8.3 Operation as input pulse interval measurement

The count value can be captured at the TImn valid edge and the interval of the pulse input to TImn can be measured. In addition, the count value can be captured by using software operation (TSmn = 1) as a capture trigger while the TEmn bit is set to 1.

The pulse interval can be calculated by the following expression.

TImn input pulse interval = Period of count clock × ((10000H × TSRmn: OVF) + (Capture value of TDRmn + 1))

Caution The TImn pin input is sampled using the operating clock selected with the CKSmn bit of timer mode register mn (TMRmn), so an error of up to one operating clock cycle occurs.

Timer count register mn (TCRmn) operates as an up counter in the capture mode.

When the channel start trigger bit (TSmn) of timer channel start register m (TSm) is set to 1, the TCRmn register counts up from 0000H in synchronization with the count clock.

When the TImn pin input valid edge is detected, the count value of the TCRmn register is transferred (captured) to timer data register mn (TDRmn) and, at the same time, the TCRmn register is cleared to 0000H, and the INTTMmn is output. If the counter overflows at this time, the OVF bit of timer status register mn (TSRmn) is set to 1. If the counter does not overflow, the OVF bit is cleared. After that, the above operation is repeated.

As soon as the count value has been captured to the TDRmn register, the OVF bit of the TSRmn register is updated depending on whether the counter overflows during the measurement period. Therefore, the overflow status of the captured value can be checked.

If the counter reaches a full count for two or more periods, it is judged to be an overflow occurrence, and the OVF bit of the TSRmn register is set to 1. However, a normal interval value cannot be measured for the OVF bit, if two or more overflows occur.

Set the STSmn2 to STSmn0 bits of the TMRmn register to 001B to use the valid edges of TImn as a start trigger and a capture trigger.

When TEmn = 1, a software operation (TSmn = 1) can be used as a capture trigger, instead of using the TImn pin input.

Figure 6-51. Block Diagram of Operation as Input Pulse Interval Measurement

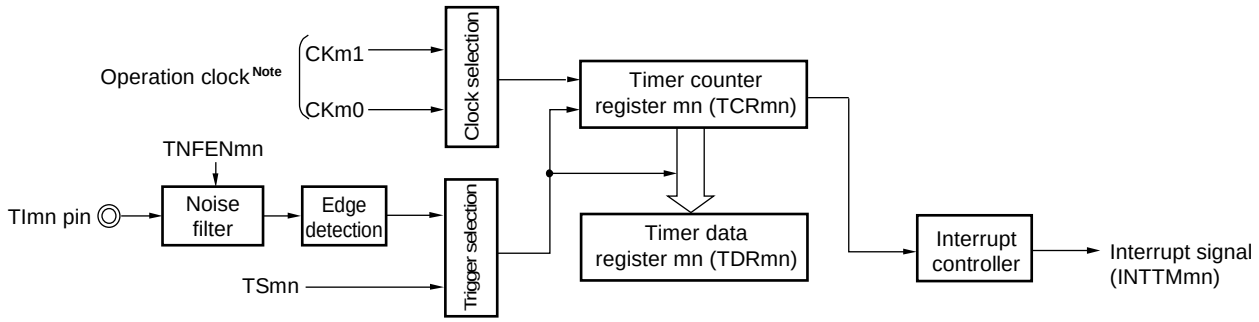

Note When channels 1 and 3, the clock can be selected from CKm0, CKm1, CKm2 and CKm3.

Remark m: Unit number (m = 0), n: Channel number (n = 0 to 7)

<R> **Figure 6-52. Example of Basic Timing of Operation as Input Pulse Interval Measurement (MDmn0 = 0)**

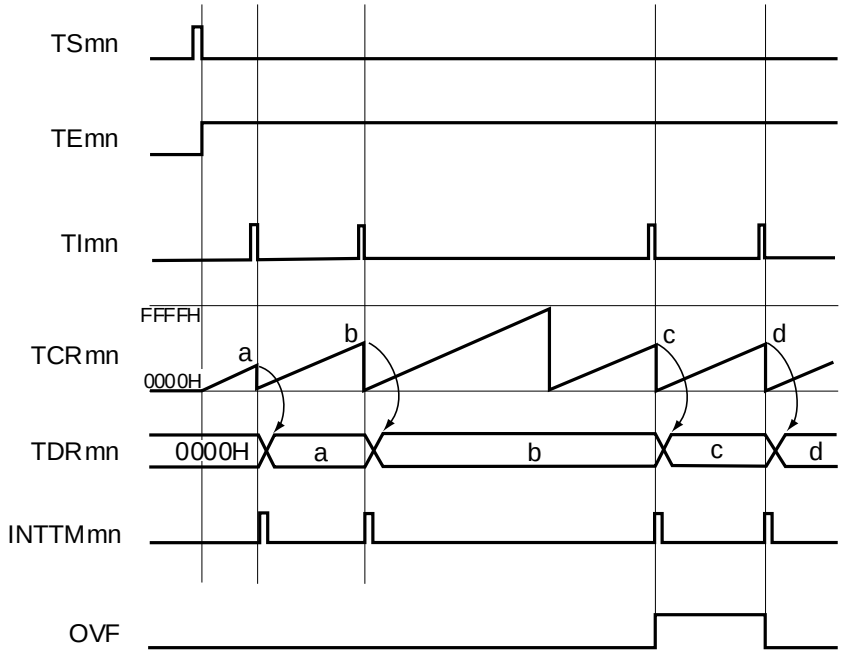

Remarks 1. m: Unit number (m = 0), n: Channel number (n = 0 to 7)

2. TSmn: Bit n of timer channel start register m (TSm)
TEmn: Bit n of timer channel enable status register m (TEm)
TImn: TImn pin input signal
TCRmn: Timer count register mn (TCRmn)
TDRmn: Timer data register mn (TDRmn)
OVF: Bit 0 of timer status register mn (TSRmn)

Figure 6-53. Example of Set Contents of Registers to Measure Input Pulse Interval

(a) Timer mode register mn (TMRmn)

	15	14	13	12	11	10	9	8	7	6	5	4	3	2	1	0
TMRmn	CKSmn1	CKSmn0		CCSmn	M/S[Note]	STSmn2	STSmn1	STSmn0	CISmn1	CISmn0			MDmn3	MDmn2	MDmn1	MDmn0
	1/0	0	0	0	0	0	0	1	1/0	1/0	0	0	0	1	0	1/0

Operation mode of channel n
010B: Capture mode

Setting of operation when counting is started
0: Does not generate INTTMmn when counting is started.
1: Generates INTTMmn when counting is started.

Selection of TImn pin input edge
00B: Detects falling edge.
01B: Detects rising edge.
10B: Detects both edges.
11B: Setting prohibited

Capture trigger selection
001B: Selects the TImn pin input valid edge.

Setting of MASTERmn bit (channels 2, 4, 6)
0: Independent channel operation
Setting of SPLITmn bit (channels 1, 3)
0: 16-bit timer mode.

Count clock selection
0: Selects operation clock (f_{MCK}).

Operation clock (f_{MCK}) selection
00B: Selects CKm0 as operation clock of channel n.
10B: Selects CKm1 as operation clock of channel n.
01B: Selects CKm2 as operation clock of channels 1, 3 (This can only be selected channels 1 and 3).
11B: Selects CKm3 as operation clock of channels 1, 3 (This can only be selected channels 1 and 3).

(b) Timer output register m (TOm)

	Bit n
TOm	TOmn 0

0: Outputs 0 from TOmn.

(c) Timer output enable register m (TOEm)

	Bit n
TOEm	TOEmn 0

0: Stops TOmn output operation by counting operation.

(d) Timer output level register m (TOLm)

	Bit n
TOLm	TOLmn 0

0: Cleared to 0 when TOMmn = 0 (master channel output mode).

(e) Timer output mode register m (TOMm)

	Bit n
TOMm	TOMmn 0

0: Sets master channel output mode.

Note TMRm2, TMRm4, TMRm6: MASTERmn bit
TMRm1, TMRm3: SPLITmn bit
TMRm0, TMRm5, TMRm7: Fixed to 0

Remark m: Unit number (m = 0), n: Channel number (n = 0 to 7)

Figure 6-54. Operation Procedure When Input Pulse Interval Measurement Function Is Used

	Software operation	Hardware status
TAU default setting		Power-off status (Clock supply is stopped and writing to each register is disabled.)
	Sets the TAUmEN bit of peripheral enable register 0 (PER0) to 1.	Power-on status. Each channel stops operating. (Clock supply is started and writing to each register is enabled.)
	Sets timer clock select register m (TPSm). Determines clock frequencies of CKm0 to CKm3.	
Channel default setting	Sets the corresponding bit of the noise filter enable register 1 (NFEN1) to 0 (off) or 1 (on). Sets timer mode register mn (TMRmn) (determines operation mode of channel).	Channel stops operating. (Clock is supplied and some power is consumed.)
Operation start	Sets TSmn bit to 1. The TSmn bit automatically returns to 0 because it is a trigger bit.	TEmn = 1, and count operation starts. Timer count register mn (TCRmn) is cleared to 0000H at the count clock input. When the MDmn0 bit of the TMRmn register is 1, INTTMmn is generated.
During operation	Set values of only the CISmn1 and CISmn0 bits of the TMRmn register can be changed. The TDRmn register can always be read. The TCRmn register can always be read. The TSRmn register can always be read. Set values of the TOMmn, TOLmn, TOmn, and TOEmn bits cannot be changed.	Counter (TCRmn) counts up from 0000H. When the TImn pin input valid edge is detected, the count value is transferred (captured) to timer data register mn (TDRmn). At the same time, the TCRmn register is cleared to 0000H, and the INTTMmn signal is generated. If an overflow occurs at this time, the OVF bit of timer status register mn (TSRmn) is set; if an overflow does not occur, the OVF bit is cleared. After that, the above operation is repeated.
Operation stop	The TTmn bit is set to 1. The TTmn bit automatically returns to 0 because it is a trigger bit.	TEmn = 0, and count operation stops. The TCRmn register holds count value and stops. The OVF bit of the TSRmn register is also held.
TAU stop	The TAUmEN bit of the PER0 register is cleared to 0.	Power-off status All circuits are initialized and SFR of each channel is also initialized.

Operation is resumed.

Remark m: Unit number (m = 0), n: Channel number (n = 0 to 7)

6.8.4 Operation as input signal high-/low-level width measurement

Caution When using a channel to implement the LIN-bus, set bit 1 (ISC1) of the input switch control register (ISC) to 1. In the following descriptions, read TImn as RxD0.

By starting counting at one edge of the TImn pin input and capturing the number of counts at another edge, the signal width (high-level width/low-level width) of TImn can be measured. The signal width of TImn can be calculated by the following expression.

Signal width of TImn input = Period of count clock × ((10000H × TSRmn: OVF) + (Capture value of TDRmn + 1))

Caution The TImn pin input is sampled using the operating clock selected with the CKSmn bit of timer mode register mn (TMRmn), so an error equivalent to one operation clock occurs.

Timer count register mn (TCRmn) operates as an up counter in the capture & one-count mode.

When the channel start trigger bit (TSmn) of timer channel start register m (TSm) is set to 1, the TEmn bit is set to 1 and the TImn pin start edge detection wait status is set.

When the TImn pin input start edge (rising edge of the TImn pin input when the high-level width is to be measured) is detected, the counter counts up from 0000H in synchronization with the count clock. When the valid capture edge (falling edge of the TImn pin input when the high-level width is to be measured) is detected later, the count value is transferred to timer data register mn (TDRmn) and, at the same time, INTTMmn is output. If the counter overflows at this time, the OVF bit of timer status register mn (TSRmn) is set to 1. If the counter does not overflow, the OVF bit is cleared. The TCRmn register stops at the value “value transferred to the TDRmn register + 1”, and the TImn pin start edge detection wait status is set. After that, the above operation is repeated.

As soon as the count value has been captured to the TDRmn register, the OVF bit of the TSRmn register is updated depending on whether the counter overflows during the measurement period. Therefore, the overflow status of the captured value can be checked.

If the counter reaches a full count for two or more periods, it is judged to be an overflow occurrence, and the OVF bit of the TSRmn register is set to 1. However, a normal interval value cannot be measured for the OVF bit, if two or more overflows occur.

Whether the high-level width or low-level width of the TImn pin is to be measured can be selected by using the CISmn1 and CISmn0 bits of the TMRmn register.

Because this function is used to measure the signal width of the TImn pin input, the TSmn bit cannot be set to 1 while the TEmn bit is 1.

CISmn1, CISmn0 of TMRmn register = 10B: Low-level width is measured.

CISmn1, CISmn0 of TMRmn register = 11B: High-level width is measured.

Figure 6-55. Block Diagram of Operation as Input Signal High-/Low-Level Width Measurement

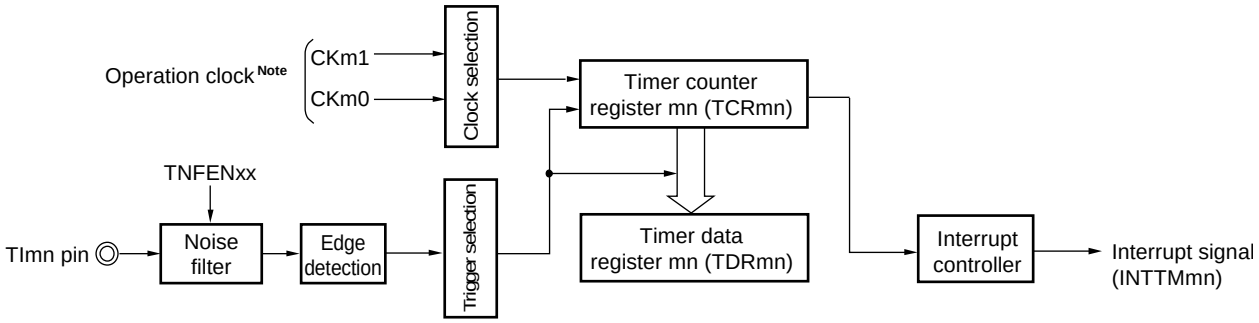

Note For channels 1 and 3, the clock can be selected from CKm0, CKm1, CKm2 and CKm3.

Figure 6-56. Example of Basic Timing of Operation as Input Signal High-/Low-Level Width Measurement

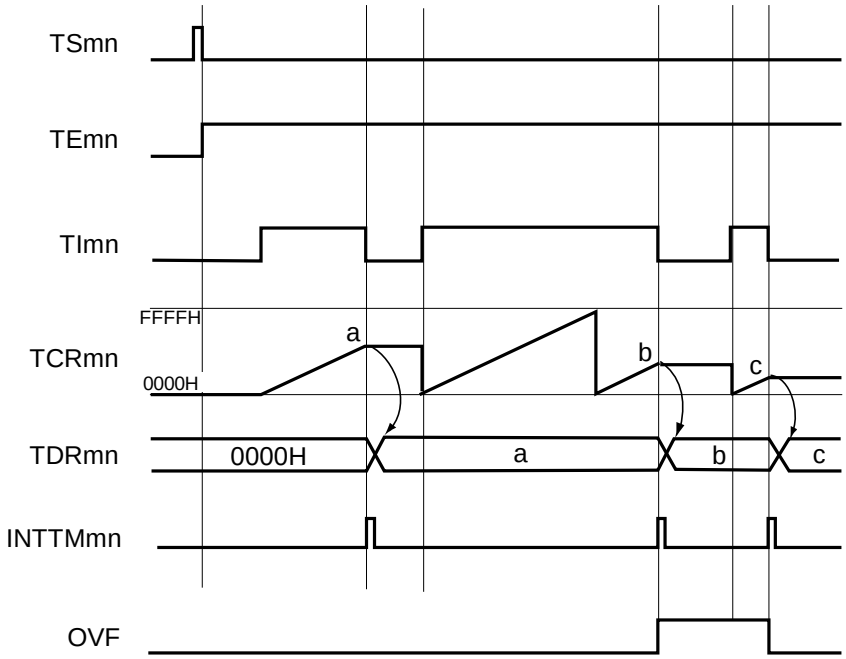

Remarks 1. m: Unit number (m = 0), n: Channel number (n = 0 to 7)

2. TSmn: Bit n of timer channel start register m (TSm)
TEmn: Bit n of timer channel enable status register m (TEm)
TImn: TImn pin input signal
TCRmn: Timer count register mn (TCRmn)
TDRmn: Timer data register mn (TDRmn)
OVF: Bit 0 of timer status register mn (TSRmn)

Figure 6-57. Example of Set Contents of Registers to Measure Input Signal High-/Low-Level Width

(a) Timer mode register mn (TMRmn)

	15	14	13	12	11	10	9	8	7	6	5	4	3	2	1	0
TMRmn	CKSmn1	CKSmn0		CCSmn	M/S[Note]	STSmn2	STSmn1	STSmn0	CISmn1	CISmn0			MDmn3	MDmn2	MDmn1	MDmn0
	1/0	0	0	0	0	0	1	0	1	1/0	0	0	1	1	0	0

Operation mode of channel n
110B: Capture & one-count

Setting of operation when counting is started
0: Does not generate INTTMmn when counting is started.

Selection of TImn pin input edge
10B: Both edges (to measure low-level width)
11B: Both edges (to measure high-level width)

Start trigger selection
010B: Selects the TImn pin input valid edge.

Setting of MASTERmn bit (channels 2, 4, 6)
0: Independent channel operation function.
Setting of SPLITmn bit (channels 1, 3)
1: 16-bit timer mode.

Count clock selection
0: Selects operation clock (f_{MCK}).

Operation clock (f_{MCK}) selection
00B: Selects CKm0 as operation clock of channel n.
10B: Selects CKm1 as operation clock of channel n.
01B: Selects CKm2 as operation clock of channel 1, 3 (This can only be selected channels 1 and 3).
11B: Selects CKm3 as operation clock of channel 1, 3 (This can only be selected channels 1 and 3).

(b) Timer output register m (TOm)

	Bit n
TOm	TOmn 0

0: Outputs 0 from TOmn.

(c) Timer output enable register m (TOEm)

	Bit n
TOEm	TOEmn 0

0: Stops the TOmn output operation by counting operation.

(d) Timer output level register m (TOLm)

	Bit n
TOLm	TOLmn 0

0: Cleared to 0 when TOMmn = 0 (master channel output mode).

(e) Timer output mode register m (TOMm)

	Bit n
TOMm	TOMmn 0

0: Sets master channel output mode.

Note TMRm2, TMRm4, TMRm6: MASTERmn bit
TMRm1, TMRm3: SPLITmn bit
TMRm0, TMRm5, TMRm7: Fixed to 0

Remark m: Unit number (m = 0), n: Channel number (n = 0 to 7)

Figure 6-58. Operation Procedure When Input Signal High-/Low-Level Width Measurement Function Is Used

	Software operation	Hardware status
TAU default setting		Power-off status (Clock supply is stopped and writing to each register is disabled.)
	Sets the TAUmEN bit of peripheral enable register 0 (PER0) to 1.	Power-on status. Each channel stops operating. (Clock supply is started and writing to each register is enabled.)
	Sets timer clock select register m (TPSm). Determines clock frequencies of CKm0 to CKm3.	
Channel default setting	Sets the corresponding bit of the noise filter enable register 1 (NFEN1) to 0 (off) or 1 (on). Sets timer mode register mn (TMRmn) (determines operation mode of channel). Clears the TOEmn bit to 0 and stops operation of TOmn.	Channel stops operating. (Clock is supplied and some power is consumed.)
Operation start	Sets the TSmn bit to 1. The TSmn bit automatically returns to 0 because it is a trigger bit.	TEmn = 1, and the TImn pin start edge detection wait status is set.
	Detects the TImn pin input count start valid edge.	Clears timer count register mn (TCRmn) to 0000H and starts counting up.
During operation	Set value of the TDRmn register can always be read. The TCRmn register can always be read. The TSRmn register can always be read. Set values of the TMRmn register, TOMmn, TOLmn, TOmn, and TOEmn bits cannot be changed.	When the TImn pin start edge is detected, the counter (TCRmn) counts up from 0000H. If a capture edge of the TImn pin is detected, the count value is transferred to timer data register mn (TDRmn) and INTTMmn is generated. If an overflow occurs at this time, the OVF bit of timer status register mn (TSRmn) is set; if an overflow does not occur, the OVF bit is cleared. The TCRmn register stops the count operation until the next TImn pin start edge is detected.
Operation stop	The TTmn bit is set to 1. The TTmn bit automatically returns to 0 because it is a trigger bit.	TEmn = 0, and count operation stops. The TCRmn register holds count value and stops. The OVF bit of the TSRmn register is also held.
TAU stop	The TAUmEN bit of the PER0 register is cleared to 0.	Power-off status All circuits are initialized and SFR of each channel is also initialized.

Operation is resumed.

Remark m: Unit number (m = 0), n: Channel number (n = 0 to 7)

6.8.5 Operation as delay counter

It is possible to start counting down when the valid edge of the TImn pin input is detected (an external event), and then generate INTTMmn (a timer interrupt) after any specified interval.

It can also generate INTTMmn (timer interrupt) at any interval by making a software set TSmn = 1 and the count down start during the period of TEmn = 1.

The interrupt generation period can be calculated by the following expression.

Generation period of INTTMmn (timer interrupt) = Period of count clock × (Set value of TDRmn + 1)

Timer count register mn (TCRmn) operates as a down counter in the one-count mode.

When the channel start trigger bit (TSmn, TSHm1, TSHm3) of timer channel start register m (TSm) is set to 1, the TEmn, TEHm1, TEHm3 bits are set to 1 and the TImn pin input valid edge detection wait status is set.

Timer count register mn (TCRmn) starts operating upon TImn pin input valid edge detection and loads the value of timer data register mn (TDRmn). The TCRmn register counts down from the value of the TDRmn register it has loaded, in synchronization with the count clock. When TCRmn = 0000H, it outputs INTTMmn and stops counting until the next TImn pin input valid edge is detected.

The TDRmn register can be rewritten at any time. The new value of the TDRmn register becomes valid from the next period.

Figure 6-59. Block Diagram of Operation as Delay Counter

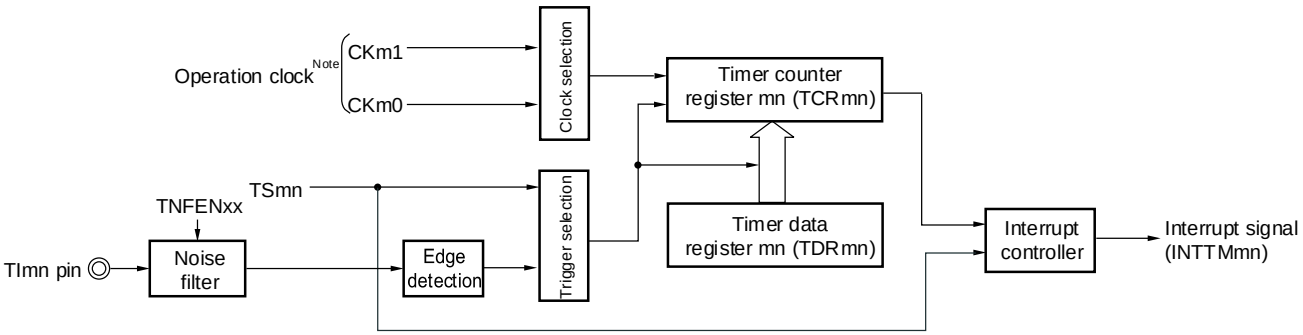

Note For using channels 1 and 3, the clock can be selected from CKm0, CKm1, CKm2 and CKm3.

Remark m: Unit number (m = 0), n: Channel number (n = 0 to 7)

Figure 6-60. Example of Basic Timing of Operation as Delay Counter

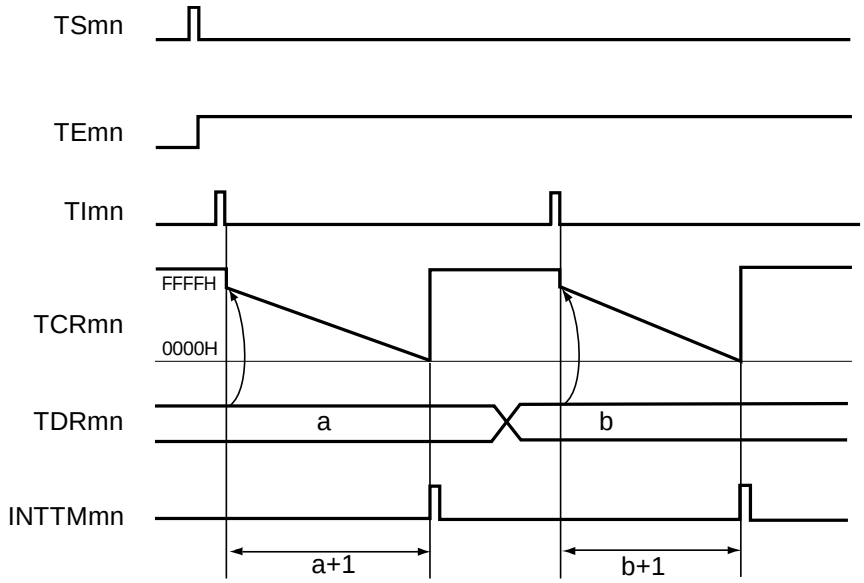

Remarks 1. m: Unit number (m = 0), n: Channel number (n = 0 to 7)

2. TSmn: Bit n of timer channel start register m (TSm)

TEmn: Bit n of timer channel enable status register m (TEm)

TImn: TImn pin input signal

TCRmn: Timer count register mn (TCRmn)

TDRmn: Timer data register mn (TDRmn)

Figure 6-61. Example of Set Contents of Registers to Delay Counter (1/2)

(a) Timer mode register mn (TMRmn)

	15	14	13	12	11	10	9	8	7	6	5	4	3	2	1	0
TMRmn	CKSmn1	CKSmn0		CCSmn	M/S[Note]	STSmn2	STSmn1	STSmn0	CISmn1	CISmn0			MDmn3	MDmn2	MDmn1	MDmn0
	1/0	1/0	0	0	0/1	0	0	1	1/0	1/0	0	0	1	0	0	0

Operation mode of channel n
100B: One-count mode

Start trigger during operation
0: Trigger input is invalid.
1: Trigger input is valid.

Selection of TImn pin input edge
00B: Detects falling edge.
01B: Detects rising edge.
10B: Detects both edges.
11B: Setting prohibited

Start trigger selection
001B: Selects the TImn pin input valid edge.

Setting of MASTERmn bit (channels 2, 4, 6)
0: Independent channel operation function.

Setting of SPLITmn bit (channels 1, 3)
0: 16-bit timer mode.
1: 8-bit timer mode.

Count clock selection
0: Selects operation clock (f_{MCK}).

Operation clock (f_{MCK}) selection
00B: Selects CKm0 as operation clock of channel n.
10B: Selects CKm1 as operation clock of channel n.
01B: Selects CKm2 as operation clock of channels 1, 3 (This can only be selected channels 1 and 3).
11B: Selects CKm3 as operation clock of channels 1, 3 (This can only be selected channels 1 and 3).

(b) Timer output register m (TOm)

	Bit n
TOm	TOmn
	0

0: Outputs 0 from TOmn.

(c) Timer output enable register m (TOEm)

	Bit n
TOEm	TOEmn
	0

0: Stops the TOmn output operation by counting operation.

Note TMRm2, TMRm4, TMRm6: MASTERmn bit
TMRm1, TMRm3: SPLITmn bit
TMRm0, TMRm5, TMRm7: Fixed to 0

Remark m: Unit number (m = 0), n: Channel number (n = 0 to 7)

Figure 6-61. Example of Set Contents of Registers to Delay Counter (2/2)

(d) Timer output level register m (TOLm)

	Bit n
TOLm	TOLmn 0

0: Cleared to 0 when TOMmn = 0 (master channel output mode).

(e) Timer output mode register m (TOMm)

	Bit n
TOMm	TOMmn 0

0: Sets master channel output mode.

Remark m: Unit number (m = 0), n: Channel number (n = 0 to 7)

Figure 6-62. Operation Procedure When Delay Counter Function Is Used

	Software operation	Hardware status
TAU default setting		Power-off status (Clock supply is stopped and writing to each register is disabled.)
	Sets the TAUmEN bit of peripheral enable register 0 (PER0) to 1. →	Power-on status. Each channel stops operating. (Clock supply is started and writing to each register is enabled.)
	Sets timer clock select register m (TPSm). Determines clock frequencies of CKm0 to CKm3.	
Channel default setting	Sets the corresponding bit of the noise filter enable register 1 (NFEN1) to 0 (off) or 1 (on). Sets timer mode register mn (TMRmn) (determines operation mode of channel). INTTMmn output delay is set to timer data register mn (TDRmn). Clears the TOEmn bit to 0 and stops operation of TOmn.	Channel stops operating. (Clock is supplied and some power is consumed.)
Operation start	Sets the TSmn bit to 1. → The TSmn bit automatically returns to 0 because it is a trigger bit.	TEmn = 1, and the start trigger detection (the valid edge of the TImn pin input is detected or the TSmn bit is set to 1) wait status is set.
	Detects the TImn pin input valid edge. →	Value of the TDRmn register is loaded to the timer count register mn (TCRmn).
During operation	Set value of the TDRmn register can be changed. The TCRmn register can always be read. The TSRmn register is not used.	The counter (TCRmn) counts down. When TCRmn counts down to 0000H, INTTMmn is output, and counting stops (which leaves TCRmn at 0000H) until the next TImn pin input.
Operation stop	The TTmn bit is set to 1. → The TTmn bit automatically returns to 0 because it is a trigger bit.	TEmn = 0, and count operation stops. The TCRmn register holds count value and stops.
TAU stop	The TAUmEN bit of the PER0 register is cleared to 0. →	Power-off status All circuits are initialized and SFR of each channel is also initialized.

Operation is resumed.

Remark m: Unit number (m = 0), n: Channel number (n = 0 to 7)

6.9 Simultaneous Channel Operation Function of Timer Array Unit

6.9.1 Operation as one-shot pulse output function

By using two channels as a set, a one-shot pulse having any delay pulse width can be generated from the signal input to the TImn pin.

The delay time and pulse width can be calculated by the following expressions.

Delay time = {Set value of TDRmn (master) + 2} × Count clock period
Pulse width = {Set value of TDRmp (slave)} × Count clock period

The master channel operates in the one-count mode and counts the delays. Timer count register mn (TCRmn) of the master channel starts operating upon start trigger detection and loads the value of timer data register mn (TDRmn).

The TCRmn register counts down from the value of the TDRmn register it has loaded, in synchronization with the count clock. When TCRmn = 0000H, it outputs INTTMmn and stops counting until the next start trigger is detected.

The slave channel operates in the one-count mode and counts the pulse width. The TCRmp register of the slave channel starts operation using INTTMmn of the master channel as a start trigger, and loads the value of the TDRmp register. The TCRmp register counts down from the value of The TDRmp register it has loaded, in synchronization with the count value. When count value = 0000H, it outputs INTTMmp and stops counting until the next start trigger (INTTMmn of the master channel) is detected. The output level of TOmp becomes active one count clock after generation of INTTMmn from the master channel, and inactive when TCRmp = 0000H.

Instead of using the TImn pin input, a one-shot pulse can also be output using the software operation (TSmn = 1) as a start trigger.

Caution The timing of loading of timer data register mn (TDRmn) of the master channel is different from that of the TDRmp register of the slave channel. If the TDRmn and TDRmp registers are rewritten during counting, therefore, an illegal waveform may be output in conflict with the timing of loading. Rewrite the TDRmn register after INTTMmn is generated and the TDRmp register after INTTMmp is generated.

Remark m: Unit number (m = 0), n: Channel number (n = 0, 2, 4, 6)
p: Slave channel number (n < p ≤ 7)

Figure 6-63. Block Diagram of Operation as One-Shot Pulse Output Function

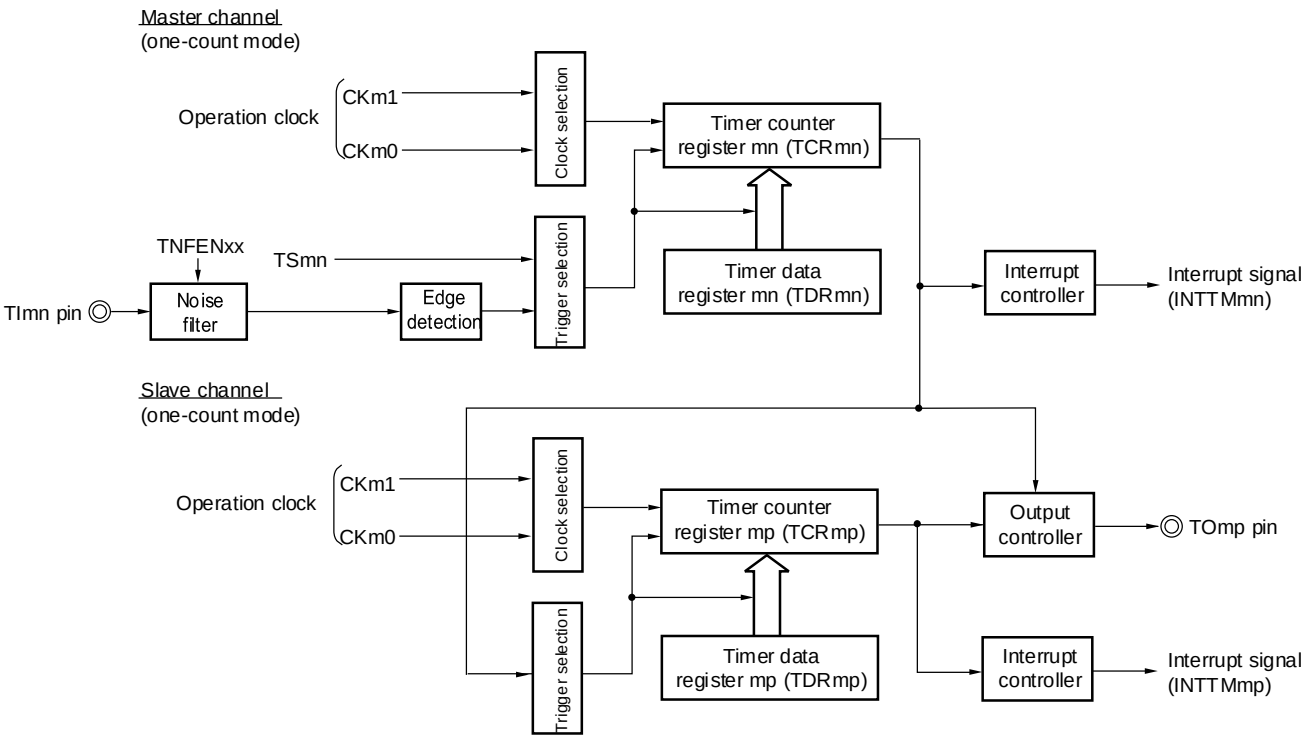

Remark m: Unit number (m = 0), n: Channel number (n = 0, 2, 4, 6)
p: Slave channel number (n < p ≤ 7)

Figure 6-64. Example of Basic Timing of Operation as One-Shot Pulse Output Function

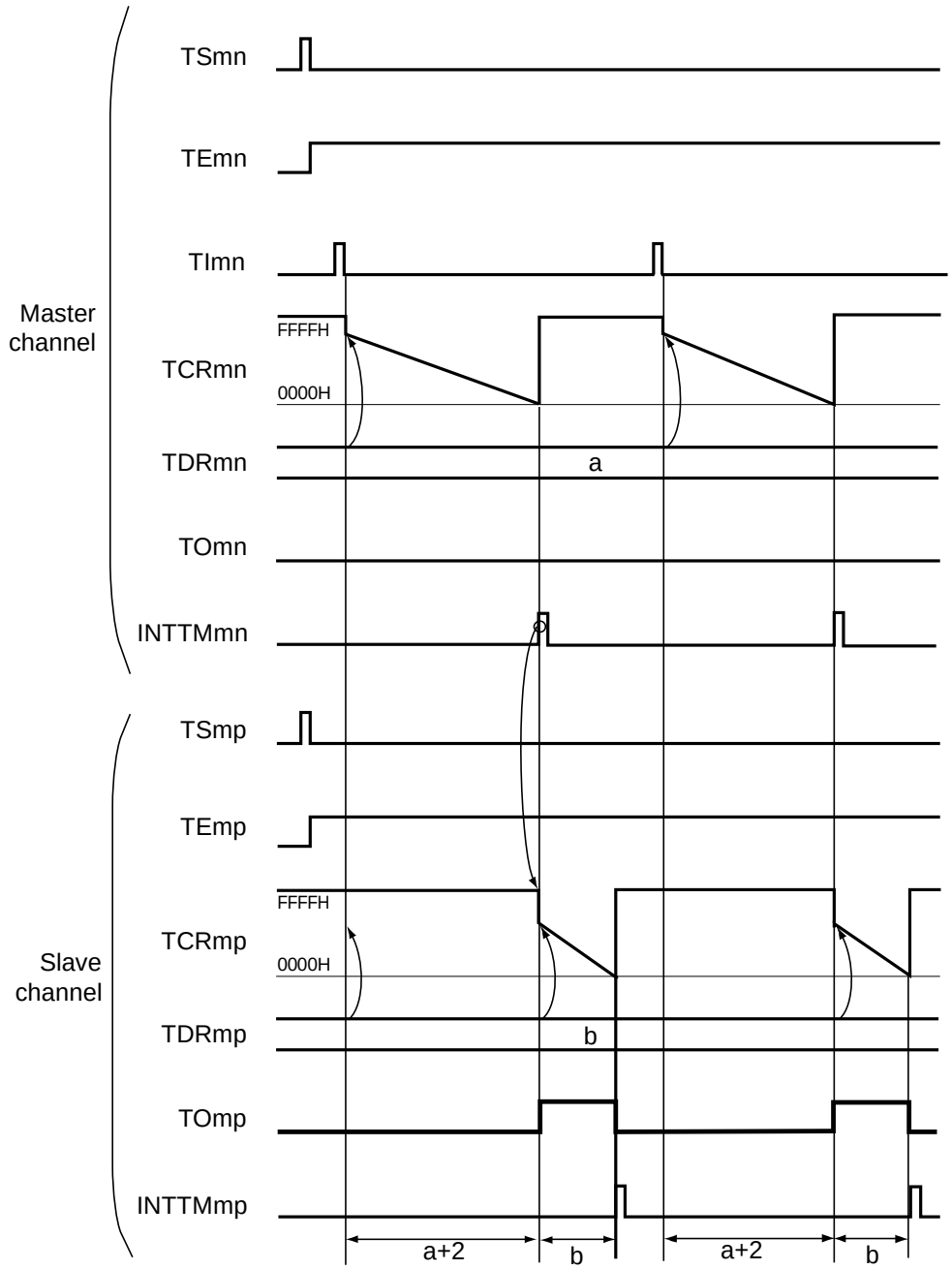

Remarks 1. m: Unit number (m = 0), n: Channel number (n = 0, 2, 4, 6)
p: Slave channel number (n < p ≤ 7)

2. TSmn, TSmp: Bit n, p of timer channel start register m (TSm)
TEmn, TEmp: Bit n, p of timer channel enable status register m (TEm)
TImn, TImp: TImn and TImp pins input signal
TCRmn, TCRmp: Timer count registers mn, mp (TCRmn, TCRmp)
TDRmn, TDRmp: Timer data registers mn, mp (TDRmn, TDRmp)
TOmn, TOmp: TOmn and TOmp pins output signal

Figure 6-65. Example of Set Contents of Registers When One-Shot Pulse Output Function Is Used (Master Channel)

(a) Timer mode register mn (TMRmn)

	15	14	13	12	11	10	9	8	7	6	5	4	3	2	1	0
TMRmn	CKSmn1	CKSmn0		CCSmn	MAS TERmn	STSmn2	STSmn1	STSmn0	CISmn1	CISmn0			MDmn3	MDmn2	MDmn1	MDmn0
	1/0	0	0	0	1 Note	0	0	1	1/0	1/0	0	0	1	0	0	0

Operation mode of channel n
100B: One-count mode

Start trigger during operation
0: Trigger input is invalid.

Selection of TImn pin input edge
00B: Detects falling edge.
01B: Detects rising edge.
10B: Detects both edges.
11B: Setting prohibited

Start trigger selection
001B: Selects the TImn pin input valid edge.

Setting of MASTERmn bit (channels 2, 4, 6)
1: Master channel.

Count clock selection
0: Selects operation clock (f_{MCK}).

Operation clock (f_{MCK}) selection
00B: Selects CKm0 as operation clock of channels n.
10B: Selects CKm1 as operation clock of channels n.

(b) Timer output register m (TOm)

	Bit n
TOm	TOmn
	0

0: Outputs 0 from TOmn.

(c) Timer output enable register m (TOEm)

	Bit n
TOEm	TOEmn
	0

0: Stops the TOmn output operation by counting operation.

(d) Timer output level register m (TOLm)

	Bit n
TOLm	TOLmn
	0

0: Cleared to 0 when TOMmn = 0 (master channel output mode).

(e) Timer output mode register m (TOMm)

	Bit n
TOMm	TOMmn
	0

0: Sets master channel output mode.

Note TMRm2, TMRm4, TMRm6: MASTERmn = 1
TMRm0: Fixed to 0

Remark m: Unit number (m = 0), n: Channel number (n = 0, 2, 4, 6)

Figure 6-66. Example of Set Contents of Registers When One-Shot Pulse Output Function Is Used (Slave Channel)

(a) Timer mode register mp (TMRmp)

	15	14	13	12	11	10	9	8	7	6	5	4	3	2	1	0
TMRmp	CKSmp1	CKSmp0		CCSmp	M/S[Note]	STSmp2	STSmp1	STSmp0	CISmp1	CISmp0			MDmp3	MDmp2	MDmp1	MDmp0
	1/0	0	0	0	0	1	0	0	0	0	0	0	1	0	0	0

Operation mode of channel p
100B: One-count mode

Start trigger during operation
0: Trigger input is invalid.

Selection of TImp pin input edge
00B: Sets 00B because these are not used.

Start trigger selection
100B: Selects INTTMmn of master channel.

Setting of MASTERmn bit (channels 2, 4, 6)
0: Independent channel operation function.

Setting of SPLITmn bit (channels 1, 3)
1: 16-bit timer mode.

Count clock selection
0: Selects operation clock (f_{MCK}).

Operation clock (f_{MCK}) selection
00B: Selects CKm0 as operation clock of channel p.
10B: Selects CKm1 as operation clock of channel p.
* Make the same setting as master channel.

(b) Timer output register m (TOm)

	Bit p
TOm	TOmp 1/0

0: Outputs 0 from TOmp.
1: Outputs 1 from TOmp.

(c) Timer output enable register m (TOEm)

	Bit p
TOEm	TOEmp 1/0

0: Stops the TOmp output operation by counting operation.
1: Enables the TOmp output operation by counting operation.

(d) Timer output level register m (TOLm)

	Bit p
TOLm	TOLmp 1/0

0: Positive logic output (active-high)
1: Negative logic output (active-low)

(e) Timer output mode register m (TOMm)

	Bit p
TOMm	TOMmp 1

1: Sets the slave channel output mode.

Note TMRm2, TMRm4, TMRm6: MASTERmn bit
TMRm1, TMRm3: SPLITmp bit
TMRm5, TMRm7: Fixed to 0

Remark m: Unit number (m = 0), n: Channel number (n = 0, 2, 4, 6)
p: Slave channel number (n < p ≤ 7)

Figure 6-67. Operation Procedure of One-Shot Pulse Output Function (1/2)

	Software operation	Hardware status
TAU default setting		Power-off status (Clock supply is stopped and writing to each register is disabled.)
	Sets the TAUmEN bit of peripheral enable registers 0 (PER0) to 1. →	Power-on status. Each channel stops operating. (Clock supply is started and writing to each register is enabled.)
	Sets timer clock select register m (TPSm). Determines clock frequencies of CKm0 and CKm1.	
Channel default setting	Sets the corresponding bit of the noise filter enable register 1 (NFEN1) to 0 (off) or 1 (on). Sets timer mode register mn, mp (TMRmn, TMRmp) of two channels to be used (determines operation mode of channels). An output delay is set to timer data register mn (TDRmn) of the master channel, and a pulse width is set to the TDRmp register of the slave channel.	Channel stops operating. (Clock is supplied and some power is consumed.)
	Sets slave channel. The TOMmp bit of timer output mode register m (TOMm) is set to 1 (slave channel output mode). Sets the TOLmp bit. Sets the TOmp bit and determines default level of the TOmp output. →	The TOmp pin goes into Hi-Z output state. The TOmp default setting level is output when the port mode register is in output mode and the port register is 0.
	Sets the TOEmp bit to 1 and enables operation of TOmp. →	TOmp does not change because channel stops operating.
	Clears the port register and port mode register to 0. →	The TOmp pin outputs the TOmp set level.

(**Remark** is listed on the next page.)

Figure 6-67. Operation Procedure of One-Shot Pulse Output Function (2/2)

Operation is resumed.

	Software operation	Hardware status
Operation start	Sets the TOEmp bit (slave) to 1 (only when operation is resumed). The TSmn (master) and TSmp (slave) bits of timer channel start register m (TSm) are set to 1 at the same time. The TSmn and TSmp bits automatically return to 0 because they are trigger bits.	The TEmn and TEmp bits are set to 1 and the master channel enters the start trigger detection (the valid edge of the TImn pin input is detected or the TSmn bit of the master channel is set to 1) wait status. Counter stops operating.
	Count operation of the master channel is started by start trigger detection of the master channel. ● Detects the TImn pin input valid edge. ● Sets the TSmn bit of the master channel to 1 by software[Note]. **Note** Do not set the TSmn bit of the slave channel to 1.	Master channel starts counting.
During operation	Set values of only the CISmn1 and CISmn0 bits of the TMRmn register can be changed. Set values of the TMRmp, TDRmn, TDRmp registers, TOMmn, TOMmp, TOLmn, and TOLmp bits cannot be changed. The TCRmn and TCRmp registers can always be read. The TSRmn and TSRmp registers are not used. Set values of the TOm and TOEm registers by slave channel can be changed.	Master channel loads the value of the TDRmn register to timer count register mn (TCRmn) by the start trigger detection (the valid edge of the TImn pin input is detected or the TSmn bit of the master channel is set to 1), and the counter starts counting down. When the count value reaches TCRmn = 0000H, the INTTMmn output is generated, and the counter stops until the next valid edge is input to the TImn pin. The slave channel, triggered by INTTMmn of the master channel, loads the value of the TDRmp register to the TCRmp register, and the counter starts counting down. The output level of TOmp becomes active one count clock after generation of INTTMmn from the master channel. It becomes inactive when TCRmp = 0000H, and the counting operation is stopped. After that, the above operation is repeated.
Operation stop	The TTmn (master) and TTmp (slave) bits are set to 1 at the same time. The TTmn and TTmp bits automatically return to 0 because they are trigger bits.	TEmn, TEmp = 0, and count operation stops. The TCRmn and TCRmp registers hold count value and stop. The TOmp output is not initialized but holds current status.
	The TOEmp bit of slave channel is cleared to 0 and value is set to the TOmp bit.	The TOmp pin outputs the TOmp set level.
TAU stop	To hold the TOmp pin output level Clears the TOmp bit to 0 after the value to be held is set to the port register. When holding the TOmp pin output level is not necessary Setting not required.	The TOmp pin output level is held by port function.
	The TAUmEN bit of the PER0 register is cleared to 0.	Power-off status All circuits are initialized and SFR of each channel is also initialized. (The TOmp bit is cleared to 0 and the TOmp pin is set to port mode.)

Remark m: Unit number (m = 0), n: Channel number (n = 0, 2, 4, 6)
p: Slave channel number (n < p ≤ 7)

6.9.2 Operation as PWM function

Two channels can be used as a set to generate a pulse of any period and duty factor.

The period and duty factor of the output pulse can be calculated by the following expressions.

Pulse period = {Set value of TDRmn (master) + 1} × Count clock period
Duty factor [%] = {Set value of TDRmp (slave)}/{Set value of TDRmn (master) + 1} × 100
0% output: Set value of TDRmp (slave) = 0000H
100% output: Set value of TDRmp (slave) ≥ {Set value of TDRmn (master) + 1}

Remark The duty factor exceeds 100% if the set value of TDRmp (slave) > (set value of TDRmn (master) + 1), it summarizes to 100% output.

The master channel operates in the interval timer mode. If the channel start trigger bit (TSmn) of timer channel start register m (TSm) is set to 1, an interrupt (INTTMmn) is output, the value set to timer data register mn (TDRmn) is loaded to timer count register mn (TCRmn), and the counter counts down in synchronization with the count clock. When the counter reaches 0000H, INTTMmn is output, the value of the TDRmn register is loaded again to the TCRmn register, and the counter counts down. This operation is repeated until the channel stop trigger bit (TTmn) of timer channel stop register m (TTm) is set to 1.

If two channels are used to output a PWM waveform, the period until the master channel counts down to 0000H is the PWM output (TOmp) cycle.

The slave channel operates in one-count mode. By using INTTMmn from the master channel as a start trigger, the TCRmp register loads the value of the TDRmp register and the counter counts down to 0000H. When the counter reaches 0000H, it outputs INTTMmp and waits until the next start trigger (INTTMmn from the master channel) is generated.

If two channels are used to output a PWM waveform, the period until the slave channel counts down to 0000H is the PWM output (TOmp) duty.

PWM output (TOmp) goes to the active level one clock after the master channel generates INTTMmn and goes to the inactive level when the TCRmp register of the slave channel becomes 0000H.

Caution To rewrite both timer data register mn (TDRmn) of the master channel and the TDRmp register of the slave channel, a write access is necessary two times. The timing at which the values of the TDRmn and TDRmp registers are loaded to the TCRmn and TCRmp registers is upon occurrence of INTTMmn of the master channel. Thus, when rewriting is performed split before and after occurrence of INTTMmn of the master channel, the TOmp pin cannot output the expected waveform. To rewrite both the TDRmn register of the master and the TDRmp register of the slave, therefore, be sure to rewrite both the registers immediately after INTTMmn is generated from the master channel.

Remark m: Unit number (m = 0), n: Channel number (n = 0, 2, 4, 6)
p: Slave channel number (n < p ≤ 7)

Figure 6-68. Block Diagram of Operation as PWM Function

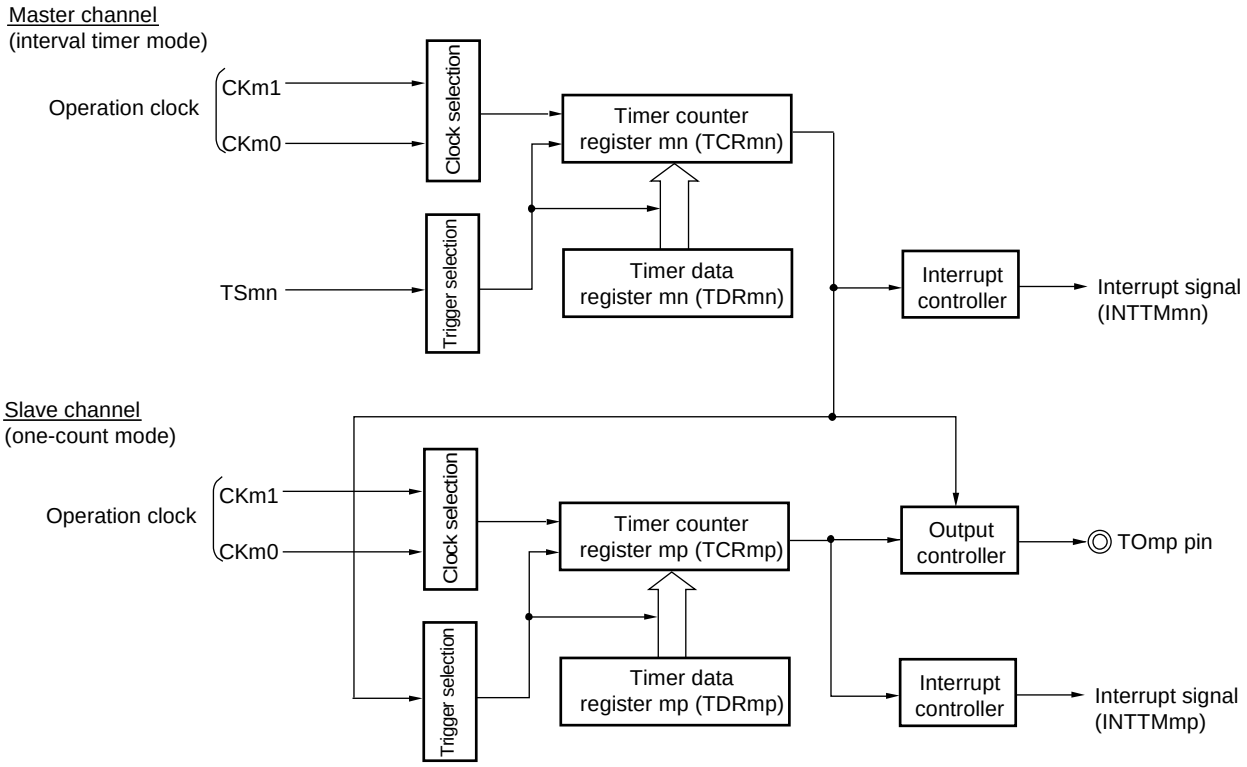

Remark m: Unit number (m = 0), n: Channel number (n = 0, 2, 4, 6)
p: Slave channel number (n < p ≤ 7)

Figure 6-69. Example of Basic Timing of Operation as PWM Function

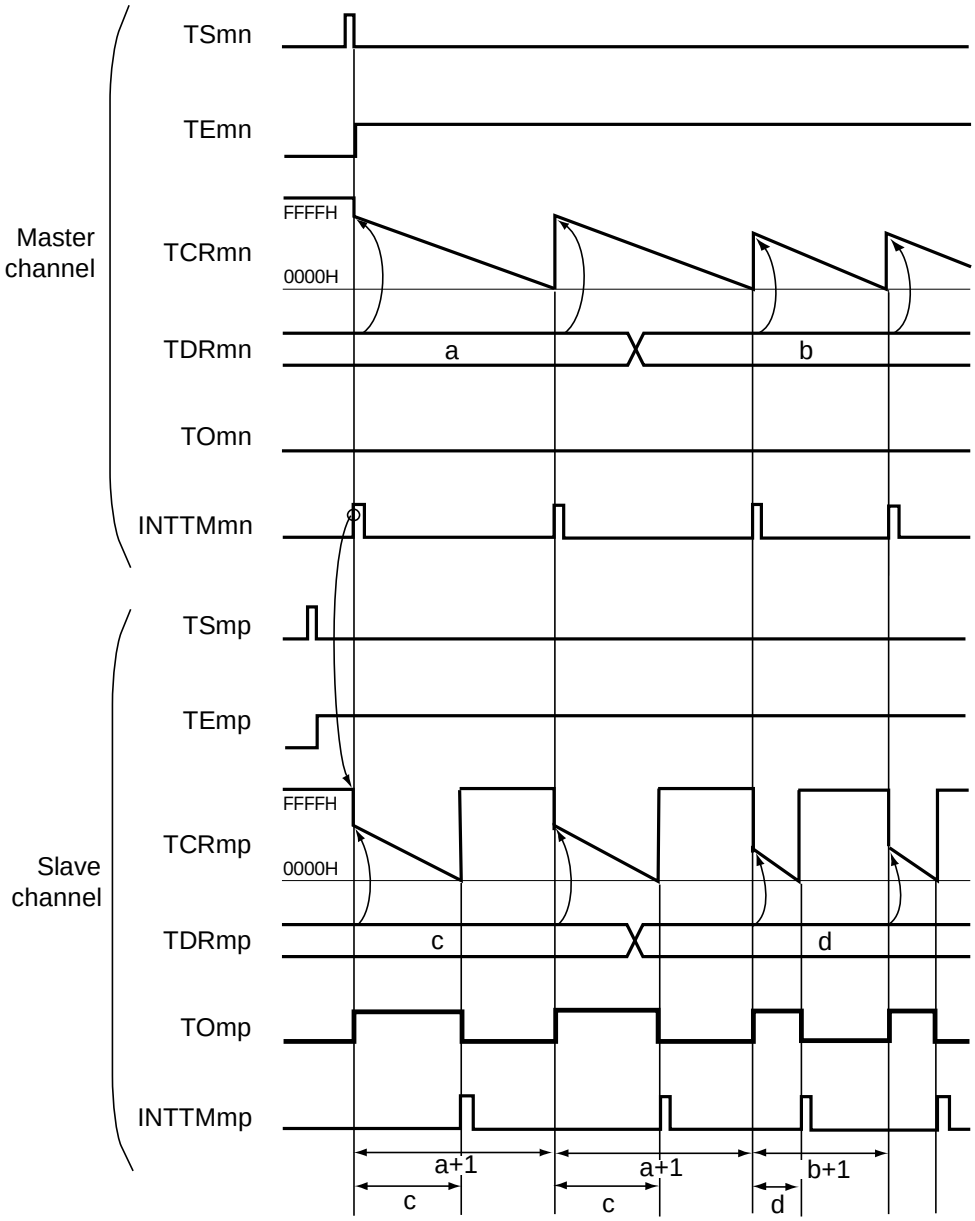

Remarks 1. m: Unit number (m = 0), n: Channel number (n = 0, 2, 4, 6)
p: Slave channel number (n < p ≤ 7)

2. TSmn, TSmp: Bit n, p of timer channel start register m (TSm)
TEmn, TEmp: Bit n, p of timer channel enable status register m (TEm)
TCRmn, TCRmp: Timer count registers mn, mp (TCRmn, TCRmp)
TDRmn, TDRmp: Timer data registers mn, mp (TDRmn, TDRmp)
TOmn, TOmp: TOmn and TOmp pins output signal

Figure 6-70. Example of Set Contents of Registers When PWM Function (Master Channel) Is Used

(a) Timer mode register mn (TMRmn)

	15	14	13	12	11	10	9	8	7	6	5	4	3	2	1	0
TMRmn	CKSmn1	CKSmn0		CCSmn	MAS TERmn Note	STSmn2	STSmn1	STSmn0	CISmn1	CISmn0			MDmn3	MDmn2	MDmn1	MDmn0
	1/0	0	0	0	1	0	0	0	0	0	0	0	0	0	0	1

Operation mode of channel n
000B: Interval timer

Setting of operation when counting is started
1: Generates INTTMmn when counting is started.

Selection of TImn pin input edge
00B: Sets 00B because these are not used.

Start trigger selection
000B: Selects only software start.

Setting of the MASTERmn bit (channels 2, 4, 6)
1: Master channel.

Count clock selection
0: Selects operation clock (f_{MCK}).

Operation clock (f_{MCK}) selection
00B: Selects CKm0 as operation clock of channel n.
10B: Selects CKm1 as operation clock of channel n.

(b) Timer output register m (TOm)

	Bit n
TOm	TOmn
	0

0: Outputs 0 from TOmn.

(c) Timer output enable register m (TOEm)

	Bit n
TOEm	TOEmn
	0

0: Stops the TOmn output operation by counting operation.

(d) Timer output level register m (TOLm)

	Bit n
TOLm	TOLmn
	0

0: Cleared to 0 when TOMmn = 0 (master channel output mode).

(e) Timer output mode register m (TOMm)

	Bit n
TOMm	TOMmn
	0

0: Sets master channel output mode.

Note TMRm2, TMRm4, TMRm6: MASTERmn = 1
TMRm0: Fixed to 0

Remark m: Unit number (m = 0), n: Channel number (n = 0, 2, 4, 6)

Figure 6-71. Example of Set Contents of Registers When PWM Function (Slave Channel) Is Used

(a) Timer mode register mp (TMRmp)

	15	14	13	12	11	10	9	8	7	6	5	4	3	2	1	0
TMRmp	CKSmp1	CKSmp0		CCSmp	M/S[Note]	STSmp2	STSmp1	STSmp0	CISmp1	CISmp0			MDmp3	MDmp2	MDmp1	MDmp0
	1/0	0	0	0	0	1	0	0	0	0	0	0	1	0	0	1

Operation mode of channel p
100B: One-count mode

Start trigger during operation
1: Trigger input is valid.

Selection of TImp pin input edge
00B: Sets 00B because these are not used.

Start trigger selection
100B: Selects INTTMmn of master channel.

Setting of MASTERmn bit (channels 2, 4, 6)
0: Slave channel
Setting of SPLITmp bit (channels 1, 3)
0: 16-bit timer mode

Count clock selection
0: Selects operation clock (f_{MCK}).

Operation clock (f_{MCK}) selection
00B: Selects CKm0 as operation clock of channel p.
10B: Selects CKm1 as operation clock of channel p.
* Make the same setting as master channel.

(b) Timer output register m (TOm)

	Bit p	
TOm	TOmp 1/0	0: Outputs 0 from TOmp. 1: Outputs 1 from TOmp.

(c) Timer output enable register m (TOEm)

	Bit p	
TOEm	TOEmp 1/0	0: Stops the TOmp output operation by counting operation. 1: Enables the TOmp output operation by counting operation.

(d) Timer output level register m (TOLm)

	Bit p	
TOLm	TOLmp 1/0	0: Positive logic output (active-high) 1: Negative logic output (active-low)

(e) Timer output mode register m (TOMm)

	Bit p	
TOMm	TOMmp 1	1: Sets the slave channel output mode.

Note TMRm2, TMRm4, TMRm6: MASTERmn bit
TMRm1, TMRm3: SPLITmp bit
TMRm5, TMRm7: Fixed to 0

Remark m: Unit number (m = 0), n: Channel number (n = 0, 2, 4, 6)
p: Slave channel number (n < p ≤ 7)

Figure 6-72. Operation Procedure When PWM Function Is Used (1/2)

	Software operation	Hardware status
TAU default setting		Power-off status (Clock supply is stopped and writing to each register is disabled.)
	Sets the TAUmEN bit of peripheral enable register 0 (PER0) to 1. →	Power-on status. Each channel stops operating. (Clock supply is started and writing to each register is enabled.)
	Sets timer clock select register m (TPSm). Determines clock frequencies of CKm0 and CKm1.	
Channel default setting	Sets timer mode registers mn, mp (TMRmn, TMRmp) of two channels to be used (determines operation mode of channels). An interval (period) value is set to timer data register mn (TDRmn) of the master channel, and a duty factor is set to the TDRmp register of the slave channel.	Channel stops operating. (Clock is supplied and some power is consumed.)
	Sets slave channel. The TOMmp bit of timer output mode register m (TOMm) is set to 1 (slave channel output mode). Sets the TOLmp bit. Sets the TOmp bit and determines default level of the TOmp output. →	The TOmp pin goes into Hi-Z output state. The TOmp default setting level is output when the port mode register is in output mode and the port register is 0.
	Sets the TOEmp bit to 1 and enables operation of TOmp. →	TOmp does not change because channel stops operating.
	Clears the port register and port mode register to 0. →	The TOmp pin outputs the TOmp set level.

(**Remark** is listed on the next page.)

Figure 6-72. Operation Procedure When PWM Function Is Used (2/2)

Operation is resumed.

	Software operation	Hardware status
Operation start	Sets the TOEmp bit (slave) to 1 (only when operation is resumed). The TSmn (master) and TSmp (slave) bits of timer channel start register m (TSm) are set to 1 at the same time. The TSmn and TSmp bits automatically return to 0 because they are trigger bits.	TEmn = 1, TEmp = 1 When the master channel starts counting, INTTMmn is generated. Triggered by this interrupt, the slave channel also starts counting.
During operation	Set values of the TMRmn and TMRmp registers, TOMmn, TOMmp, TOLmn, and TOLmp bits cannot be changed. Set values of the TDRmn and TDRmp registers can be changed after INTTMmn of the master channel is generated. The TCRmn and TCRmp registers can always be read. The TSRmn and TSRmp registers are not used.	The counter of the master channel loads the TDRmn register value to timer count register mn (TCRmn), and counts down. When the count value reaches TCRmn = 0000H, INTTMmn output is generated. At the same time, the value of the TDRmn register is loaded to the TCRmn register, and the counter starts counting down again. At the slave channel, the value of the TDRmp register is loaded to the TCRmp register, triggered by INTTMmn of the master channel, and the counter starts counting down. The output level of TOmp becomes active one count clock after generation of the INTTMmn output from the master channel. It becomes inactive when TCRmp = 0000H, and the counting operation is stopped. After that, the above operation is repeated.
Operation stop	The TTmn (master) and TTmp (slave) bits are set to 1 at the same time. The TTmn and TTmp bits automatically return to 0 because they are trigger bits.	TEmn, TEmp = 0, and count operation stops. The TCRmn and TCRmp registers hold count value and stop. The TOmp output is not initialized but holds current status.
	The TOEmp bit of slave channel is cleared to 0 and value is set to the TOmp bit.	The TOmp pin outputs the TOmp set level.
TAU stop	To hold the TOmp pin output level Clears the TOmp bit to 0 after the value to be held is set to the port register. When holding the TOmp pin output level is not necessary Setting not required.	The TOmp pin output level is held by port function.
	The TAUmEN bit of the PER0 register is cleared to 0.	Power-off status All circuits are initialized and SFR of each channel is also initialized. (The TOmp bit is cleared to 0 and the TOmp pin is set to port mode.)

Remark m: Unit number (m = 0), n: Channel number (n = 0, 2, 4, 6)
p: Slave channel number (n < p ≤ 7)

6.9.3 Operation as multiple PWM output function

By extending the PWM function and using multiple slave channels, many PWM waveforms with different duty values can be output.

For example, when using two slave channels, the period and duty factor of an output pulse can be calculated by the following expressions.

Pulse period = {Set value of TDRmn (master) + 1} × Count clock period
Duty factor 1 [%] = {Set value of TDRmp (slave 1)}/{Set value of TDRmn (master) + 1} × 100
Duty factor 2 [%] = {Set value of TDRmq (slave 2)}/{Set value of TDRmn (master) + 1} × 100

Remark Although the duty factor exceeds 100% if the set value of TDRmp (slave 1) > {set value of TDRmn (master) + 1} or if the {set value of TDRmq (slave 2)} > {set value of TDRmn (master) + 1}, it is summarized into 100% output.

Timer count register mn (TCRmn) of the master channel operates in the interval timer mode and counts the periods.

The TCRmp register of the slave channel 1 operates in one-count mode, counts the duty factor, and outputs a PWM waveform from the TOmp pin. The TCRmp register loads the value of timer data register mp (TDRmp), using INTTMmn of the master channel as a start trigger, and starts counting down. When TCRmp = 0000H, TCRmp outputs INTTMmp and stops counting until the next start trigger (INTTMmn of the master channel) has been input. The output level of TOmp becomes active one count clock after generation of INTTMmn from the master channel, and inactive when TCRmp = 0000H.

In the same way as the TCRmp register of the slave channel 1, the TCRmq register of the slave channel 2 operates in one-count mode, counts the duty factor, and outputs a PWM waveform from the TOmq pin. The TCRmq register loads the value of the TDRmq register, using INTTMmn of the master channel as a start trigger, and starts counting down. When TCRmq = 0000H, the TCRmq register outputs INTTMmq and stops counting until the next start trigger (INTTMmn of the master channel) has been input. The output level of TOmq becomes active one count clock after generation of INTTMmn from the master channel, and inactive when TCRmq = 0000H.

When channel 0 is used as the master channel as above, up to seven types of PWM signals can be output at the same time.

Caution To rewrite both timer data register mn (TDRmn) of the master channel and the TDRmp register of the slave channel 1, write access is necessary at least twice. Since the values of the TDRmn and TDRmp registers are loaded to the TCRmn and TCRmp registers after INTTMmn is generated from the master channel, if rewriting is performed separately before and after generation of INTTMmn from the master channel, the TOmp pin cannot output the expected waveform. To rewrite both the TDRmn register of the master and the TDRmp register of the slave, be sure to rewrite both the registers immediately after INTTMmn is generated from the master channel (This applies also to the TDRmq register of the slave channel 2).

Remark m: Unit number (m = 0), n: Channel number (n = 0, 2, 4)
p: Slave channel number 1, q: Slave channel number 2
n < p < q ≤ 7 (Where p and q are integers greater than n)

Figure 6-73. Block Diagram of Operation as Multiple PWM Output Function (Output Two Types of PWMs)

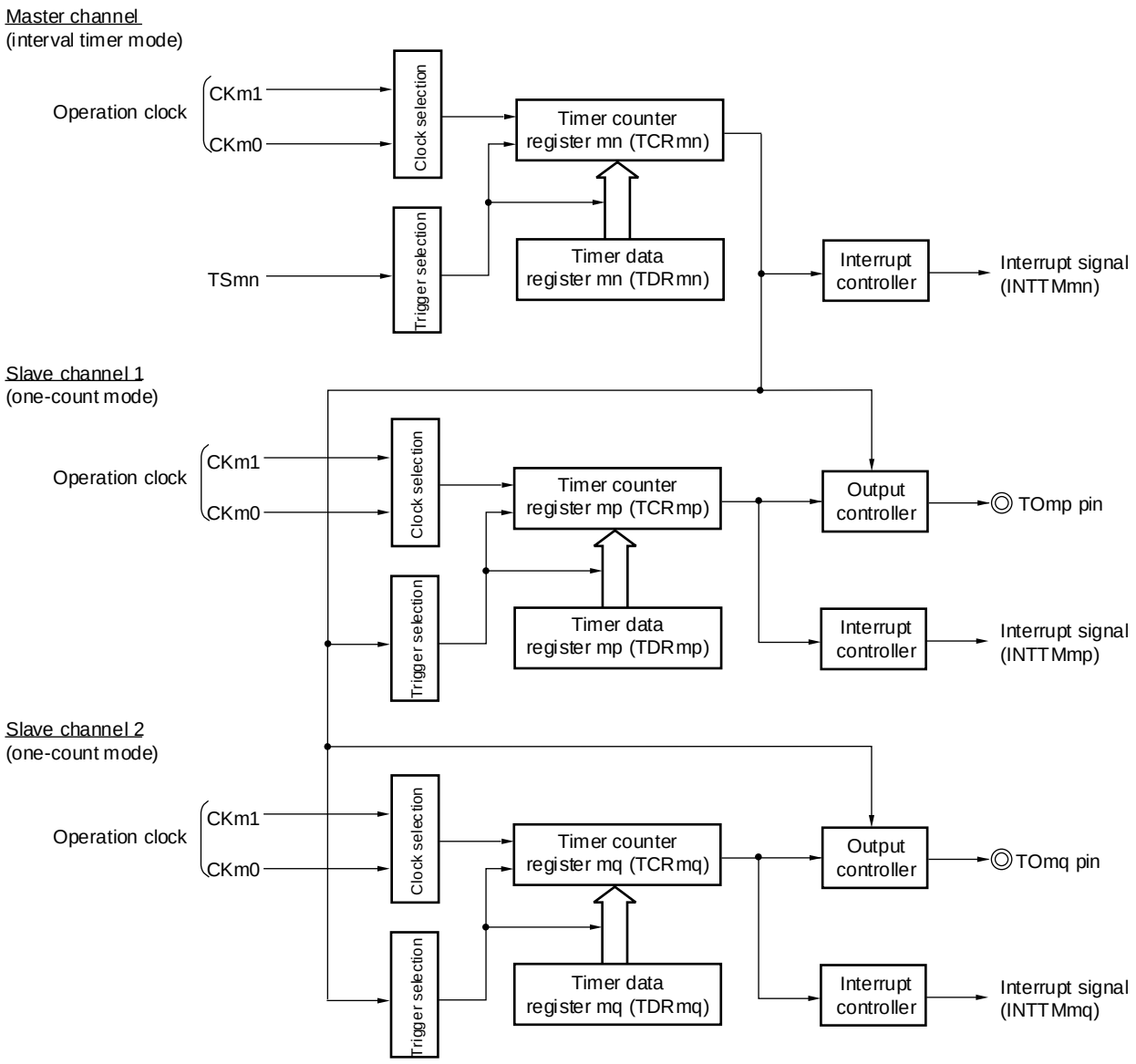

Remark m: Unit number (m = 0), n: Channel number (n = 0, 2, 4)
p: Slave channel number 1, q: Slave channel number 2
n < p < q ≤ 7 (Where p and q are integers greater than n)

Figure 6-74. Example of Basic Timing of Operation as Multiple PWM Output Function (Output Two Types of PWMs)

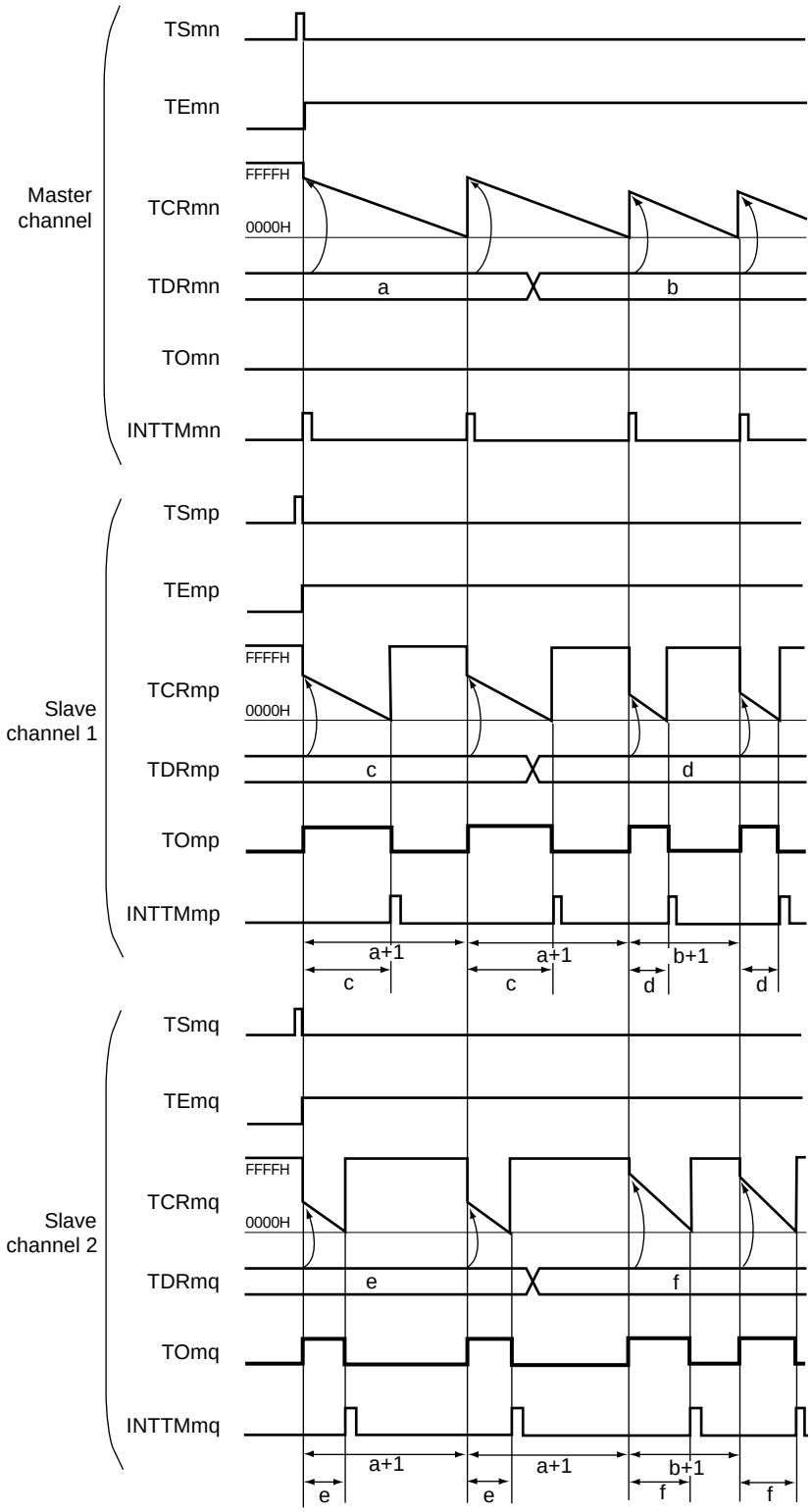

(**Remark** is listed on the next page.)

Remarks 1. m: Unit number (m = 0), n: Channel number (n = 0, 2, 4)
p: Slave channel number 1, q: Slave channel number 2
n < p < q ≤ 7 (Where p and q are integers greater than n)

2.

TSmn, TSmp, TSmq:	Bit n, p, q of timer channel start register m (TSm)
TEmn, TEmp, TEmq:	Bit n, p, q of timer channel enable status register m (TEm)
TCRmn, TCRmp, TCRmq:	Timer count registers mn, mp, mq (TCRmn, TCRmp, TCRmq)
TDRmn, TDRmp, TDRmq:	Timer data registers mn, mp, mq (TDRmn, TDRmp, TDRmq)
TOmn, TOmp, TOmq:	TOmn, TOmp, and TOmq pins output signal

Figure 6-75. Example of Set Contents of Registers
When Multiple PWM Output Function (Master Channel) Is Used

(a) Timer mode register mn (TMRmn)

	15	14	13	12	11	10	9	8	7	6	5	4	3	2	1	0
TMRmn	CKSmn1	CKSmn0		CCSmn	MASTERmn Note	STSmn2	STSmn1	STSmn0	CISmn1	CISmn0			MDmn3	MDmn2	MDmn1	MDmn0
	1/0	0	0	0	1	0	0	0	0	0	0	0	0	0	0	1

Operation mode of channel n
000B: Interval timer

Setting of operation when counting is started
1: Generates INTTMmn when counting is started.

Selection of TImn pin input edge
00B: Sets 00B because these are not used.

Start trigger selection
000B: Selects only software start.

Setting of MASTERmn bit (channels 2, 4, 6)
1: Master channel.

Count clock selection
0: Selects operation clock (f_{MCK}).

Operation clock (f_{MCK}) selection
00B: Selects CKm0 as operation clock of channel n.
10B: Selects CKm1 as operation clock of channel n.

(b) Timer output register m (TOm)

	Bit n
TOm	TOmn
	0

0: Outputs 0 from TOmn.

(c) Timer output enable register m (TOEm)

	Bit n
TOEm	TOEmn
	0

0: Stops the TOmn output operation by counting operation.

(d) Timer output level register m (TOLm)

	Bit n
TOLm	TOLmn
	0

0: Cleared to 0 when TOMmn = 0 (master channel output mode).

(e) Timer output mode register m (TOMm)

	Bit n
TOMm	TOMmn
	0

0: Sets master channel output mode.

Note TMRm2, TMRm4, TMRm6: MASTERmn = 1
TMRm0: Fixed to 0

Remark m: Unit number (m = 0), n: Channel number (n = 0, 2, 4)

Figure 6-76. Example of Set Contents of Registers
When Multiple PWM Output Function (Slave Channel) Is Used (Output Two Types of PWMs)

(a) Timer mode register mp, mq (TMRmp, TMRmq)

	15	14	13	12	11	10	9	8	7	6	5	4	3	2	1	0
TMRmp	CKSmp1	CKSmp0		CCSmp	M/S[Note]	STSmp2	STSmp1	STSmp0	CISmp1	CISmp0			MDmp3	MDmp2	MDmp1	MDmp0
	1/0	0	0	0	0	1	0	0	0	0	0	0	1	0	0	1
TMRmq	CKSmq1	CKSmq0		CCSmq	M/S[Note]	STSmq2	STSmq1	STSmq0	CISmq1	CISmq0			MDmq3	MDmq2	MDmq1	MDmq0
	1/0	0	0	0	0	1	0	0	0	0	0	0	1	0	0	1

Operation mode of channel p, q
100B: One-count mode

Start trigger during operation
1: Trigger input is valid.

Selection of TImp and TImq pins input edge
00B: Sets 00B because these are not used.

Start trigger selection
100B: Selects INTTMmn of master channel.

Setting of MASTERmp, MASTERmq bits (channels 2, 4, 6)
0: Independent channel operation function.

Setting of SPLITmp, SPLITmq bits (channels 1, 3)
1: 16-bit timer mode.

Count clock selection
0: Selects operation clock (f_{MCK}).

Operation clock (f_{MCK}) selection
00B: Selects CKm0 as operation clock of channel p, q.
10B: Selects CKm1 as operation clock of channel p, q.
* Make the same setting as master channel.

(b) Timer output register m (TOm)

	Bit q	Bit p
TOm	TOmq	TOmp
	1/0	1/0

0: Outputs 0 from TOmp or TOmq.
1: Outputs 1 from TOmp or TOmq.

(c) Timer output enable register m (TOEm)

	Bit q	Bit p
TOEm	TOEmq	TOEmp
	1/0	1/0

0: Stops the TOmp or TOmq output operation by counting operation.
1: Enables the TOmp or TOmq output operation by counting operation.

(d) Timer output level register m (TOLm)

	Bit q	Bit p
TOLm	TOLmq	TOLmp
	1/0	1/0

0: Positive logic output (active-high)
1: Negative logic output (active-low)

(e) Timer output mode register m (TOMm)

	Bit q	Bit p
TOMm	TOMmq	TOMmp
	1	1

1: Sets the slave channel output mode.

Note TMRm2, TMRm4, TMRm6: MASTERmp, MASTERmq bit
TMRm1, TMRm3: SPLITmp, SPLIT0q bit
TMRm5, TMRm7: Fixed to 0

Remark m: Unit number (m = 0), n: Channel number (n = 0, 2, 4)
p: Slave channel number 1, q: Slave channel number 2
n < p < q ≤ 7 (Where p and q are integers greater than n)

Figure 6-77. Operation Procedure When Multiple PWM Output Function Is Used (1/2)

	Software operation	Hardware status
TAU default setting		Power-off status (Clock supply is stopped and writing to each register is disabled.)
	Sets the TAUmEN bit of peripheral enable register 0 (PER0) to 1. →	Power-on status. Each channel stops operating. (Clock supply is started and writing to each register is enabled.)
	Sets timer clock select register m (TPSm). Determines clock frequencies of CKm0 and CKm1.	
Channel default setting	Sets timer mode registers mn, mp, 0q (TMRmn, TMRmp, TMRmq) of each channel to be used (determines operation mode of channels). An interval (period) value is set to timer data register mn (TDRmn) of the master channel, and a duty factor is set to the TDRmp and TDRmq registers of the slave channels.	Channel stops operating. (Clock is supplied and some power is consumed.)
	Sets slave channels. The TOMmp and TOMmq bits of timer output mode register m (TOMm) are set to 1 (slave channel output mode). Sets the TOLmp and TOLmq bits. Sets the TOmp and TOmq bits and determines default level of the TOmp and TOmq outputs. →	The TOmp and TOmq pins go into Hi-Z output state. The TOmp and TOmq default setting levels are output when the port mode register is in output mode and the port register is 0.
	Sets the TOEmp and TOEmq bits to 1 and enables operation of TOmp and TOmq. →	TOmp and TOmq do not change because channels stop operating.
	Clears the port register and port mode register to 0. →	The TOmp and TOmq pins output the TOmp and TOmq set levels.

(**Remark** is listed on the next page.)

Figure 6-77. Operation Procedure When Multiple PWM Output Function Is Used (2/2)

Operation is resumed.

	Software operation	Hardware status
Operation start	(Sets the TOEmp and TOEmq (slave) bits to 1 only when resuming operation.) The TSmn bit (master), and TSmp and TSmq (slave) bits of timer channel start register m (TSm) are set to 1 at the same time. The TSmn, TSmp, and TSmq bits automatically return to 0 because they are trigger bits.	TEmn = 1, TEmp, TEmq = 1 When the master channel starts counting, INTTMmn is generated. Triggered by this interrupt, the slave channel also starts counting.
During operation	Set values of the TMRmn, TMRmp, TMRmq registers, TOMmn, TOMmp, TOMmq, TOLmn, TOLmp, and TOLmq bits cannot be changed. Set values of the TDRmn, TDRmp, and TDRmq registers can be changed after INTTMmn of the master channel is generated. The TCRmn, TCRmp, and TCRmq registers can always be read. The TSRmn, TSRmp, and TSR0q registers are not used.	The counter of the master channel loads the TDRmn register value to timer count register mn (TCRmn) and counts down. When the count value reaches TCRmn = 0000H, INTTMmn output is generated. At the same time, the value of the TDRmn register is loaded to the TCRmn register, and the counter starts counting down again. At the slave channel 1, the values of the TDRmp register are transferred to the TCRmp register, triggered by INTTMmn of the master channel, and the counter starts counting down. The output levels of TOmp become active one count clock after generation of the INTTMmn output from the master channel. It becomes inactive when TCRmp = 0000H, and the counting operation is stopped. At the slave channel 2, the values of the TDRmq register are transferred to TCRmq register, triggered by INTTMmn of the master channel, and the counter starts counting down. The output levels of TOmq become active one count clock after generation of the INTTMmn output from the master channel. It becomes inactive when TCRmq = 0000H, and the counting operation is stopped. After that, the above operation is repeated.
Operation stop	The TTmn bit (master), TTmp, and TTmq (slave) bits are set to 1 at the same time. The TTmn, TTmp, and TTmq bits automatically return to 0 because they are trigger bits.	TEmn, TEmp, TEmq = 0, and count operation stops. The TCRmn, TCRmp, and TCRmq registers hold count value and stop. The TOmp and TOmq output are not initialized but hold current status.
	The TOEmp and TOEmq bits of slave channels are cleared to 0 and value is set to the TOmp and TOmq bits.	The TOmp and TOmq pins output the TOmp and TOmq set levels.
TAU stop	To hold the TOmp and TOmq pin output levels Clears the TOmp and TOmq bits to 0 after the value to be held is set to the port register. When holding the TOmp and TOmq pin output levels are not necessary Setting not required	The TOmp and TOmq pin output levels are held by port function.
	The TAUmEN bit of the PER0 register is cleared to 0.	Power-off status All circuits are initialized and SFR of each channel is also initialized. (The TOmp and TOmq bits are cleared to 0 and the TOmp and TOmq pins are set to port mode.)

Remark m: Unit number (m = 0), n: Channel number (n = 0, 2, 4)
p: Slave channel number 1, q: Slave channel number 2
n < p < q ≤ 7 (Where p and q are a consecutive integer greater than n)

6.9.4 Remote control output function

The PWM output function is applied to the remote control output function.

The pairings of channels 2 and 3 and channels 4 and 5 are used to output the PWM signal (See **6.9.2 Operation as PWM function** for how to set up each channel.). The PWM signal output from channel 3 is used as a mask wave, the PWM signal output from channel 5 is used as a carrier waves, and the logical products of these signals are output as remote control output.

The high level width output part of the remote control output is composed of a 20 to 60 kHz carrier signal.

Figure 6-78. Remote Control Output

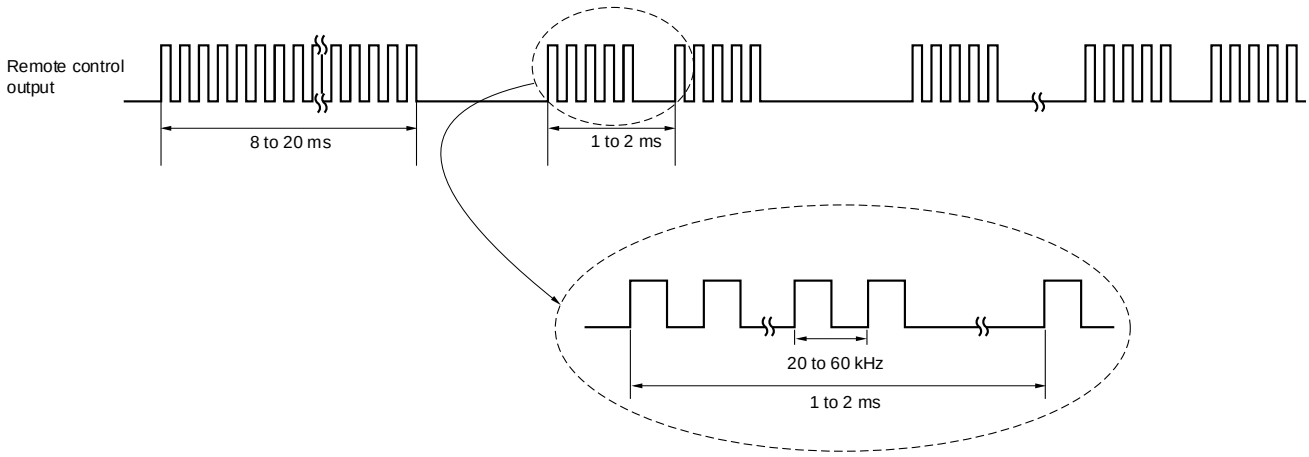

Figure 6-78 shows the steps for setting the remote control output.

Figure 6-79. Procedure for Setting Remote control Output (1/2)

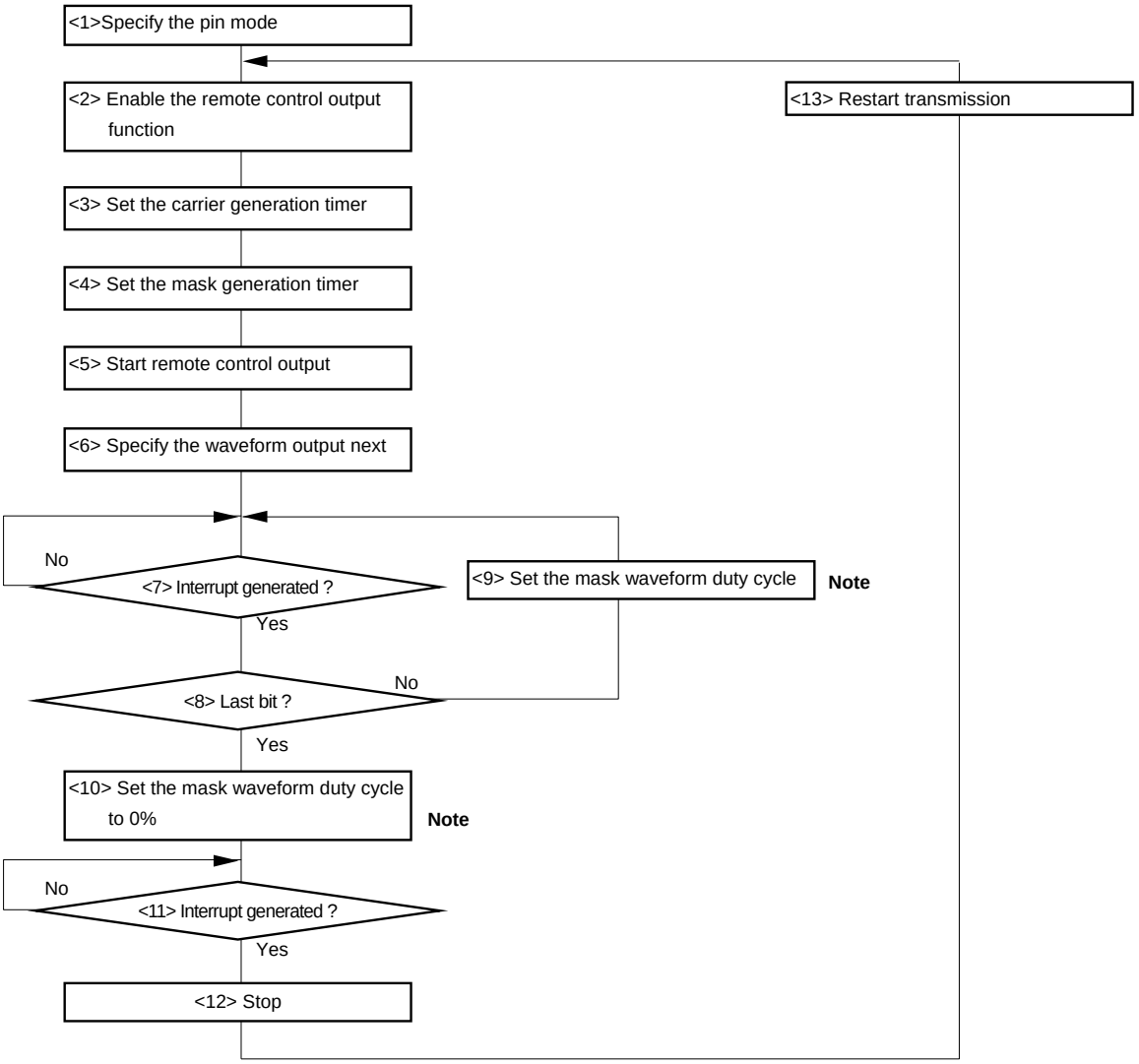

<1> Specify the pin mode.
Clear the PFSEG20 bit of the PFSEG2 register to 0, the PM30 bit of the PM3 register to 0, the PU30 bit of the PU3 register to 0, and the P30 bit of the P3 register to 0.

<2> Set the TOS0 bit of the timer output select register (TOS) to 1.

<3> Specify the carrier waveform by using the PWM function for channel 4 (master) and channel 5 (slave).
TDR04 register value = Carrier waveform cycle - 1
TDR05 register value = Carrier waveform high-level width

<4> Generate the mask waveform by using the PWM function for channel 2 (master) and channel 3 (slave).
Specify the mask waveform cycle and high-level width (header code)
TDR02 register value = Mask waveform cycle - 1
TDR03 register value = Mask waveform high-level width

<5> Start output operation.
Set the TS02, TS03, TS04, and TS05 bits of timer channel start register 0 (TS0) to 1 at the same time.

Figure 6-79. Procedure for Setting Remote control Output (2/2)

<6> Specify the waveform to be output next.
TDR02 register value = Mask waveform cycle - 1
TDR03 register value = Mask waveform high-level width

<7> Wait for an interrupt signal (INTTM02) to be generated at the rise of the mask waveform.

<8> Jump to step <10> for processing that stops output if the bit is the final code bit of the remote control carrier waveform.
If not the final code bit, set the next mask waveform in step <9> and repeat steps <7> to <9> until the final code bit is received.

[Consecutive transmission]

<9> Specify the cycle and duty (cycle: TDR02; high level width: TDR03).

[Stopping remote control output]

<10> Set the mask waveform duty to 0%. (Set TDR03 to 0000H.)

<11> Wait for an interrupt signal (INTTM02) to be generated at the rise of the mask waveform.

<12> Stop the timer.
Set the TT02, TT03, TT04, and TT05 bits of timer channel stop register 0 (TT0) to 1 at the same time, clear the TOE02, TOE03, TOE04, and TOE05 bits of timer output enable register 0 (TOE0) to 0, and then clear the TO02, TO03, TO04, and TO05 bits of timer output register 0 (TO0) to 0.

[Restarting remote control output]

<13> To restart transmission, set the TOE03 and TOE05 bits to 1 and re-specify the settings from step <2>. (It is not necessary to overwrite the same value.)

Note Setting values are applied at the rise of the mask waveform.
The mask waveform cycle and high level width can only be specified as an integral multiple of the carrier cycle.

Cautions
1. **During the period between <3> and <11>, do not stop supplying a clock to TAU (by using a STOP instruction, etc.) or change the value of registers other than TDR02 and TDR03.**
2. **The system must be in the normal operation mode or the HALT mode during steps <3> to <11>.**
3. **Select the same operation clock for channels 2, 3, 4, and 5.**
4. **Be sure to perform steps <7> to <9> to stop remote control output.**
   The following errors might occur if stopped using a different method:
   - A waveform with a cycle that is not the same as the carrier is output.
   - The timer output is fixed to a high level after the operation stops.
5. **When performing remote control output, be sure to set channels 2, 3, 4, and 5 to PWM output mode.**

6.10 Cautions When Using Timer Array Unit

6.10.1 Cautions when using timer output

Depends on products, a pin is assigned a timer output and other alternate functions. In this case, outputs of the other alternate functions must be set in initial status.

(1) 80-pin products

(a) Using TO00 to TO07 outputs

In addition to clearing the port mode register (the PMxx bit) and the port register (the Pxx bit) to 0, be sure to clear the corresponding bit of LCD port function registers 0 to 6 (PFSEG0 to PFSEG6) to “0”. For details, see **Table 4-6 Setting Examples of Registers and Output Latches When Using Alternate Function**.

(b) Using TO05 output assigned to the P42 (When PIOR2 = 1)

So that the alternated SO10/TxD1 output becomes 1, not only set the port mode register (the PM42 bit) and the port register (the P42 bit) to 0, but also use the serial channel enable status register 0 (SE0), serial output register 0 (SO0), and serial output enable register 0 (SOE0) with the same setting as the initial status.

(2) 64-pin products

(a) Using TO00 to TO05 and TO07 outputs

In addition to clearing the port mode register (the PMxx bit) and the port register (the Pxx bit) to 0, be sure to clear the corresponding bit of LCD port function registers 0 to 6 (PFSEG0 to PFSEG6) to “0”. For details, see **Table 4-6 Setting Examples of Registers and Output Latches When Using Alternate Function**.

(b) Using TO05 output assigned to the P42 (When PIOR2 = 1)

So that the alternated SO10/TxD1 output becomes 1, not only set the port mode register (the PM42 bit) and the port register (the P42 bit) to 0, but also use the serial channel enable status register 0 (SE0), serial output register 0 (SO0), and serial output enable register 0 (SOE0) with the same setting as the initial status.

(c) Using TO06 output assigned to the P125

In addition to clearing the port mode register (the PM125 bit) and the port register (the P125 bit) to 0, be sure to clear the ISCVL3 bit of the LCD Input switch control register (ISCLCD) to “0”. For details, see **Table 4-6 Setting Examples of Registers and Output Latches When Using Alternate Function**.

CHAPTER 7 16-BIT TIMER KB20

16-bit timer KB20 is a timer that can generate PWM output which is suitable to control power sources and lighting.
The 16-bit timer KB20 (IH) incorporated in the RL78/L13 also has the IH-only PWM output function.

	80-pin	64-pin
16-bit timer KB20 (IH)	√	√

Cautions 1. Most of the following descriptions in this chapter use the 80-pin products as an example.
2. In this manual, the 16-bit timer KB20 (IH) incorporated in the RL78/L13 may be referred to as the 16-bit timer KB20.

7.1 Functions of 16-bit Timer KB20

16-bit timer KB20 is a dedicated PWM output timer and has two outputs (one of two outputs can be selected from three pins). This timer is provided with the following functions.

(1) PWM output
- A variable PWM with any duty or cycle can be output while the timer is operating.
- The default timer output level (high or low level) can be set.

(2) Timer restart function
Timer output can be restarted directly (not via the CPU) when a trigger source (counter restart trigger source 0 to 2 or IH-PWM output restart request signal) occurs.

(3) Forced output stop function 1 (by interlocking with the comparator, INTP)
Timer output can be fixed to high impedance, high, or low level directly (not via the CPU) when a trigger source (comparator 0, 1, INTP0, INTP1) occurs. The stop function is cancelled by the stop trigger setting of forced output stop function 1.

(4) Forced output stop function 2 (by interlocking with the comparator, INTP)
Timer output can be fixed to high or low level directly (not via the CPU) when a trigger source occurs (comparator 0, 1, INTP0, INTP1, INTP2). When the following counter period is started or when a trigger source is eliminated, the stop function is cancelled directly (not via the CPU).

(5) Dithering function
The “set duty + 1” waveform in each 16-period cycle can be output in the range of periods 0 to 15.

(6) Smooth start function
It is possible to make a smooth start that automatically increases the duty after PWM output starts until it reaches the configured duty value.
It is possible to configure the initial duty and duty plus one incremental period.

(7) Maximum frequency setting function
With the timer restart function, restart can be held pending until the set period.

(8) Interleave function
With the timer restart function, it is possible to use external sources to automatically alternate restart output between two outputs. It is possible to make interleaved PFC control with critical conduction mode.

Remark Critical conduction mode is a PFC control method that activates a switching FET by detecting zero level of inductor current.

7.2 Configuration of 16-bit Timer KB20

16-bit timer KB20 includes the following hardware.

Table 7-1. Configuration of 16-bit Timer KB20

Item	Configuration
Timer/counter	16-bit timer counter KB20 (TKBCNT0)
Registers	16-bit timer KB2 compare registers 00 to 03 (TKBCR00 to TKBCR03)
Timer output	TKBO00, TKBO01-0, TKBO01-1, TKBO01-2
Control registers	Peripheral enable register (PER1) Timer clock select register (TKBPSCS0) 16-bit timer KB2 operation control register 00 (TKBCTL00) 16-bit timer KB2 operation control register 01 (TKBCTL01) 16-bit timer KB2 output control register 00 (TKBIOC00) 16-bit timer KB2 output control register 01 (TKBIOC01) 16-bit timer KB2 flag register 0 (TKBFLG0) 16-bit timer KB2 trigger register 0 (TKBTRG0) 16-bit timer KB2 flag clear trigger register 0 (TKBCLR0) 16-bit timer KB2 dithering count registers 00, 01 (TKBDNR00, TKBDNR01) 16-bit timer KB2 compare 1L & dithering count register 00 (TKBCRLD00) 16-bit timer KB2 compare 3L & dithering count register 01 (TKBCRLD01) 16-bit timer KB2 smooth start initial duty registers 00, 01 (TKBSIR00, TKBSIR01) 16-bit timer KB2 smooth start step width registers 00, 01 (TKBSSR00, TKBSSR01) 16-bit timer KB2 maximum frequency limit setting register 0 (TKBMFR0) 16-bit timer KB2 counter restart select register (ELSELRn) 16-bit timer KB2 output switch register (PWCTKB) Forced output stop function control register 0 (TKBPACTL00) Forced output stop function control register 1 (TKBPACTL01) Forced output stop function control register 2 (TKBPACTL02) Forced output stop function flag register (TKBPAFLG0) Forced output stop function 1 start register (TKBPAHFS0) Forced output stop function 1 stop register (TKBPAHFT0) Port mode register 7 (PM7) Port register 7 (P7)

Figure 7-1 shows a block diagram.

Figure 7-1. Block Diagram of 16-bit Timer KB20

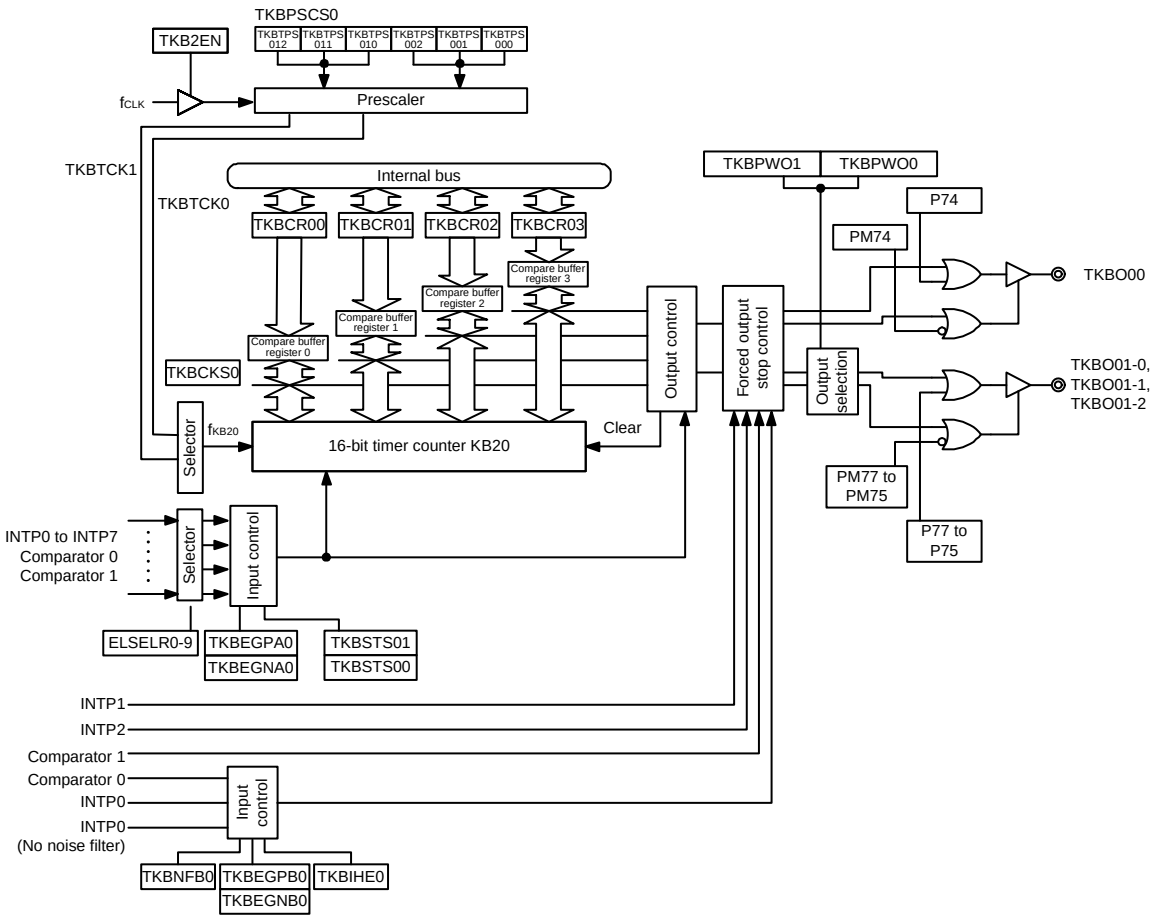

Remark f_{KB20}: Count clock of 16-bit timer KB20

7.2.1 16-bit timer KB2 compare registers 00 to 03 (TKBCR00 to TKBCR03)

TKBCR0m can be refreshed (writing the same value) and its value can be rewritten while the timer is counting (TKBCE0 = 1). When the value of TKBCR0m is rewritten while the timer is operating, that value is latched, transferred to TKBCR0m at the following timing, and the value of TKBCR0m is changed.

- When starting count operation of the counter (TKBCE0 = 0)
- When a batch overwrite trigger (TKBRDT0 = 1) or an external trigger (TKBTSE0 = 1) occurs

These registers can be set in 16-bit units.

Reset signal generation clears these registers to 0000H.

Figure 7-2. Format of 16-bit Timer KB2 Compare Registers 00 to 03 (TKBCR00 to TKBCR03)

Address: F0500H (TKBCR00), F0502H (TKBCR01), F0504H (TKBCR02), F0506H (TKBCR03)

After reset: 0000H R/W

Symbol	15	14	13	12	11	10	9	8	7	6	5	4	3	2	1	0
TKBCR0m																

Remark m = 0 to 3

7.3 Registers Controlling 16-bit Timer KB20

16-bit timer KB20 is controlled by the following registers.

- Peripheral enable register 1 (PER1)
- Timer clock select register (TKBPSCS0)
- 16-bit timer KB2 operation control register 00 (TKBCTL00)
- 16-bit timer KB2 operation control register 01 (TKBCTL01)
- 16-bit timer KB2 output control register 00 (TKBIOC00)
- 16-bit timer KB2 output control register 01 (TKBIOC01)
- 16-bit timer KB2 flag register 0 (TKBFLG0)
- 16-bit timer KB2 trigger register 0 (TKBTRG0)
- 16-bit timer KB2 flag clear trigger register 0 (TKBCLR0)
- 16-bit timer KB2 dithering count registers 00, 01 (TKBDNR00, TKBDNR01)
- 16-bit timer KB2 compare 1L & dithering count register 00 (TKBCRLD00)
- 16-bit timer KB2 compare 3L & dithering count register 01 (TKBCRLD01)
- 16-bit timer KB2 smooth start initial duty registers 00, 01 (TKBSIR00, TKBSIR01)
- 16-bit timer KB2 smooth start step width registers 00, 01 (TKBSSR00, TKBSSR01)
- 16-bit timer KB2 maximum frequency limit setting register 0 (TKBMFR0)
- 16-bit timer KB2 counter restart select register (ELSELRn)
- 16-bit timer KB2 output switch register (PWCTKB)
- Forced output stop function control register 0 (TKBPACTL00)
- Forced output stop function control register 1 (TKBPACTL01)
- Forced output stop function control register 2 (TKBPACTL02)
- Forced output stop function flag register (TKBPAFLG0)
- Forced output stop function 1 start register (TKBPAHFS0)
- Forced output stop function 1 stop register (TKBPAHFT0)
- Port mode register 7 (PM7)
- Port register 7 (P7)

7.3.1 Peripheral enable register (PER1)

This register is used to enable or disable supplying the clock to the peripheral hardware. Clock supply to a hardware macro that is not used is stopped in order to reduce the power consumption and noise.

When timer KB20 is used, be sure to set bit 4 of this register to 1.

The PER1 register can be set by a 1-bit or 8-bit memory manipulation instruction.

Reset signal generation clears this register to 00H.

Figure 7-3. Format of Peripheral Enable Register (PER1)

Address: F0508H After reset: 00H R/W

Symbol	<7>	6	<5>	<4>	3	2	1	0
PER1	TMKAEN	0	CMPEN	TKB2EN	0	0	0	0

TKB2EN	Control of timer KB20 input clock
0	Stops supply of input clock. ● SFR used by timer KB20 cannot be written. ● Timer KB20 is in the reset status.
1	Supplies input clock. ● SFR used by timer KB20 can be read/written.

Cautions 1. When using 16-bit timer KB20, be sure to set the TKB2EN bit to 1 first and then set the following registers. If TKB2EN = 0, writing to a control register of 16-bit timer KB20 is ignored, and all read values are default values (except for 16-bit timer KB2 counter restart select register (ELSELRn), 16-bit timer KB2 output switch register (PWCTKB), and port mode register 7 (PM7)).

- **Timer clock select register (TKBPSCS0)**
- **16-bit timer KB2 operation control register 00 (TKBCTL00)**
- **16-bit timer KB2 operation control register 01 (TKBCTL01)**
- **16-bit timer KB2 output control register 00 (TKBIOC00)**
- **16-bit timer KB2 output control register 01 (TKBIOC01)**
- **16-bit timer KB2 flag register 0 (TKBFLG0)**
- **16-bit timer KB2 trigger register 0 (TKBTRG0)**
- **16-bit timer KB2 flag clear trigger register 0 (TKBCLR0)**
- **16-bit timer KB2 dithering count registers 00, 01 (TKBDNR00, TKBDNR01)**
- **16-bit timer KB2 compare 1L & dithering count register 00 (TKBCRLD00)**
- **16-bit timer KB2 compare 3L & dithering count register 01 (TKBCRLD01)**
- **16-bit timer KB2 smooth start initial duty registers 00, 01 (TKBSIR00, TKBSIR01)**
- **16-bit timer KB2 smooth start step width registers 00, 01 (TKBSSR00, TKBSSR01)**
- **16-bit timer KB2 maximum frequency limit setting register 0 (TKBMFR0)**
- **Forced output stop function control register 0 (TKBPACTL00)**
- **Forced output stop function control register 1 (TKBPACTL01)**
- **Forced output stop function control register 2 (TKBPACTL02)**
- **Forced output stop function flag register (TKBPAFLG0)**
- **Forced output stop function 1 start register (TKBPAHFS0)**
- **Forced output stop function 1 stop register (TKBPAHFT0)**

2. Be sure to set bits 0 to 3 and 6 to “0”.

7.3.2 Timer clock select register (TKBPSCS0)

The TKBPSCS0 register is a register that is used to select the division ratio of TKBTCK0/TKBTCK1.
Rewriting of the TKBPSCS0 register is possible only in the following cases.

If TKBTPS000 to TKBTPS002 can be rewritten:
All channels for which TKBTCK0 is selected as the operation clock (TKBCKS0 = 0) are stopped (TKBCE0 = 0).

If the TKBTPS010 to TKBTPS012 bits can be rewritten:
All channels for which TKBTCK1 is selected as the operation clock (TKBCKS0 = 1) are stopped (TKBCE0 = 0).

The TKBPSCS0 register can be set by an 8-bit memory manipulation instruction.
Reset signal generation clears this register to 00H.

Figure 7-4. Format of Timer Clock Select Register (TKBPSCS0)

Address: F052AH After reset: 00H R/W

Symbol	7	6	5	4	3	2	1	0
TKBPSCS0	0	TKBTPS012	TKBTPS011	TKBTPS010	0	TKBTPS002	TKBTPS001	TKBTPS000

TKBTPS0n2	TKBTPS0n1	TKBTPS0n0	Selection of operation clock (n = 0, 1)[Note 1]
0	0	0	f_{CLK} or f_{HOCO} with no division is selected for TKBTCKn[Note 2]
0	0	1	f_{CLK} divided by 2 is selected for TKBTCKn[Note 3]
0	1	0	f_{CLK} divided by 4 is selected for TKBTCKn[Note 3]
0	1	1	f_{CLK} divided by 8 is selected for TKBTCKn[Note 3]
1	0	0	f_{CLK} divided by 16 is selected as TKBTCKn[Note 3]
1	0	1	f_{CLK} divided by 32 is selected as TKBTCKn[Note 3]
Other than above			Setting prohibited

Notes 1. When changing the clock selected for f_{CLK}, stop timer KB20 (TKBCE0 = 0).

2. f_{CLK} is selected when FRQSEL4 = 0 and f_{HOCO} is selected when FRQSEL4 = 1 in the user option byte (000C2H). When selecting f_{HOCO} for the operating clock, set f_{CLK} to f_{IH} before setting bit 4 (TKB2EN) in peripheral enable register 1 (PER1). When changing f_{CLK} to a clock other than f_{IH}, clear bit 4 (TKB2EN) in peripheral enable register 1 (PER1) before changing.

3. Do not set this value when FRQSEL4 = 1 in the user option byte (000C2H).

Caution Be sure to clear bits 7 and 3 to 0.

Remark f_{CLK}: CPU/peripheral hardware clock frequency

7.3.3 16-bit timer KB2 operation control register 00 (TKBCTL00)

TKBCTL00 is a register that is used to select the IH-only PWM output function, smooth start function, dithering function, maximum frequency limit function, interleaved PFC1 output, batch overwrite function for compare registers using external triggers, and counter triggers.

TKBCTL00 can be set by a 16-bit memory manipulation instruction.

Reset signal generation clears this register to 0000H.

Figure 7-5. Format of 16-bit Timer KB2 Operation Control Register 00 (TKBCTL00) (1/2)

Address: F0522H After reset: 0000H R/W

Symbol	15	14	13	12	11	10	9	8
TKBCTL00	TKBIHE0	0	TKBSSE01	TKBDIE01	0	0	TKBSSE00	TKBDIE00

7	6	5	4	3	2	1	0
TKBMFE0	0	TKBIRS01	TKBIRS00	0	TKBTSE0	TKBSTS01	TKBSTS00

TKBIHE0	Control of IH-only PWM output function of TKBO01-0, TKBO01-1, TKBO01-2
0	IH-only PWM output function not used
1	IH-only PWM output function used

TKBSSE0p	Control of PWM output smooth start function of TKBO00, TKBO01-0, TKBO01-1, TKBO01-2
0	PWM output smooth start function not used
1	PWM output smooth start function used

TKBDIE0p	Control of PWM output dithering function of TKBO00, TKBO01-0, TKBO01-1, TKBO01-2
0	PWM output dithering function not used
1	PWM output dithering function used

TKBMFE0	Control of maximum frequency limit function of TKBO00, TKBO01-0, TKBO01-1, TKBO01-2
0	Maximum frequency limit function not used
1	Maximum frequency limit function used

TKBIRS01	TKBIRS00	Acceptable range setting of restart trigger source input for immediately outputting TKBO01-0, TKBO01-1, TKBO01-2 in interleave PFC output mode
0	0	T/2 to T/2 + T/64
0	1	T/2 to T/2 + T/32
1	0	T/2 to T/2 + T/16
1	1	T/2 to T/2 + T/8

TKBTSE0	Control of compare register batch overwrite function set by external trigger
0	Compare register batch overwrite function set by external trigger not used
1	Compare register batch overwrite function set by external trigger used

Remark p = 0, 1

Figure 7-5. Format of 16-bit Timer KB2 Operation Control Register 00 (TKBCTL00) (2/2)

Address: F0522H After reset: 0000H R/W

Symbol	15	14	13	12	11	10	9	8
TKBCTL00	TKBIHE0	0	TKBSSE01	TKBDIE01	0	0	TKBSSE00	TKBDIE00

7	6	5	4	3	2	1	0
TKBMFE0	0	TKBIRS01	TKBIRS00	0	TKBTSE0	TKBSTS01	TKBSTS00

TKBSTS01	TKBSTS00	Selection for timer KB20 restart trigger
0	0	Trigger input not used
0	1	Count restart trigger source 0 selected
1	0	Count restart trigger source 1 selected
1	1	Count restart trigger source 2 selected

Cautions 1. Do not rewrite the TKBCTL00 register during timer operation. However, the TKBCTL00 register can be refreshed (the same value can be written).

2. Be sure to clear bits 14, 11, 10, 6, and 3 to 0.

3. When using the PWM output function for IH control, set the TKBSTS01 and TKBSTS00 bits to 00B.

7.3.4 16-bit timer KB2 operation control register 01 (TKBCTL01)

TKBCTL01 is a register that controls the count operation and sets the count clock of the 16-bit timer.

TKBCTL01 can be set by a 1-bit or 8-bit memory manipulation instruction.

Reset signal generation clears this register to 00H.

Figure 7-6. Format of 16-bit Timer KB2 Operation Control Register 01 (TKBCTL01)

Address: F0529H After reset: 00H R/W

Symbol	<7>	6	5	4	3	2	1	0
TKBCTL01	TKBCE0	0	0	TKBCKS00	0	0	TKBMD01	TKBMD00

TKBCE0	Control of timer KB20 operation
0	Timer operation stopped (counter is set to FFFF).
1	Timer count operation enabled

TKBCKS00	Selection of timer KB20 clock
0	TKBTCK0 selected
1	TKBTCK1 selected

TKBMD01	TKBMD00	Selection of timer KB20 operation mode
0	0	Standalone mode
1	1	Interleave PFC output mode
Other than above		Setting prohibited

Cautions 1. Do not rewrite the TKBCTL01 register during timer operation. However, the TKBCTL01 register can be refreshed (the same value can be written).

2. In TKBCTL01, be sure to clear bits 6, 5, 3, and 2 to 0.

7.3.5 16-bit timer KB2 output control register 00 (TKBIOC00)

TKBIOC00 is a register that is used to set the default level/active level in 16-bit timer KB20 output (TKBO00, TKBO01-0, TKBO01-1, TKBO01-2).

TKBIOC00 can be set by a 1-bit or 8-bit memory manipulation instruction.

Reset signal generation clears this register to 00H.

Figure 7-7. Format of KB2 Output Control Register 00 (TKBIOC00)

Address: F0526H After reset: 00H R/W

Symbol	7	6	5	4	<3>	<2>	<1>	<0>
TKBIOC00	0	0	0	0	TKBTOL01	TKBTOL00	TKBTOD01	TKBTOD00

TKBTOL0p	Active level setting of timer output TKBO00, TKBO01-0, TKBO01-1, TKBO01-2
0	Active level is set to high level
1	Active level is set to low level

TKBTOD0p	Default level setting of timer output TKBO00, TKBO01-0, TKBO01-1, TKBO01-2
0	Default level is set to low level
1	Default level is set to high level

Cautions 1. Do not rewrite the TKBIOC00 register during timer operation. However, the TKBIOC00 register can be refreshed (the same value can be written).

2. Be sure to clear bits 7 to 4 to 0.

3. Actual output of the TKBO00, TKBO01-0, TKBO01-1, TKBO01-2 pins is set not only by TKBO00, TKBO01-0, TKBO01-1, TKBO01-2 output but by the port mode register (PM7) and port register (P7) for the shared ports.

4. When using the PWM output function for IH control, set the TKBTOL01 and TKBTOD01 bits = 00B or TKBTOL01 and TKBTOD01 bits = 11B.

Remark p = 0, 1

7.3.6 16-bit timer KB2 output control register 01 (TKBIOC01)

TKBIOC01 is a register that controls output disabled/enabled of 16-bit timer KB20 output (TKBO00, TKBO01-0, TKBO01-1, TKBO01-2).

TKBIOC01 can be set by a 1-bit or 8-bit memory manipulation instruction.

Reset signal generation clears this register to 00H.

Figure 7-8. Format of 16-bit Timer KB2 Output Control Register 01 (TKBIOC01)

Address: F0528H After reset: 00H R/W

Symbol	7	6	5	4	3	2	<1>	<0>
TKBIOC01	TKBNFB0	0	TKBEGPA0	TKBEGNA0	TKBEGPB0	TKBEGNB0	TKBTOE01	TKBTOE00

TKBNFB0	Selection of forced output stop input 1 for PWM output function for IH control
0	For details on the settings, see **7.3.18 Forced output stop function control register 0 (TKBPACTL00)** and **7.3.19 Forced output stop function control register 1 (TKBPACTL01)**.
1	

TKBEGPA0	TKBEGNA0	Selection of active edge of restart trigger for PWM output function for IH control
0	0	No edge detected (restart trigger is invalid)
0	1	Falling edge
1	0	Rising edge
1	1	Both rising and falling edges

TKBEGPB0	TKBEGNB0	Selection of active edge of forced output stop input for PWM output function for IH control
0	0	No edge detected (forced output stop input is invalid)
0	1	Falling edge
1	0	Rising edge
1	1	Both rising and falling edges

TKBTOE0n	Output enabled/disabled of timer output TKBO00, TKBO01-0, TKBO01-1, TKBO01-2
0	Timer output disabled (Low-level output when TKBTOD0n = 0. High-level output when TKBTOD0n = 1.)
1	Timer output enabled

Cautions 1. Bits 1 and 0 (TKBTOE01, TKBTOE00) in the TKBIOC00 register can be rewritten during timer operation. However, the same value must be written to bits 7, and 5 to 2 when rewriting.

2. Be sure to clear bit 6 to 0.

3. Actual output of the TKBO00, TKBO01-0, TKBO01-1, TKBO01-2 pins is set not only by TKBO00, TKBO01-0, TKBO01-1, TKBO01-2 output but by the port mode register (PM7) and the port register (P7) for the shared ports.

Remark n = 0, 1

7.3.7 16-bit timer KB2 flag register 0 (TKBFLG0)

TKBFLG0 is a register with status flags for 16-bit timer KB20.

TKBFLG0 can be read by a 1-bit or 8-bit memory manipulation instruction.

Reset signal generation clears this register to 00H.

Figure 7-9. Format of 16-bit Timer KB2 Flag Register 0 (TKBFLG0)

Address: F0513H After reset: 00H R

Symbol	<7>	<6>	<5>	<4>	<3>	<2>	<1>	<0>
TKBFLG0	TKBSSF01	TKBSSF00	TKBSEF01	TKBSEF00	TKBIRF0	TKBIEF0	TKBMFF0	TKBRSF0

TKBSSF0n	Status flag for PWM output smooth start function of TKBO00, TKBO01-0, TKBO01-1, TKBO01-2 pins
0	During stop in PWM output smooth start function
1	Executing in PWM output smooth start function

TKBSEF0n	Error flag for PWM output smooth start function of TKBO00, TKBO01-0, TKBO01-1, TKBO01-2 pins
0	No error, or completion of clearing by TKBCLSEn
1	Error (TKBSSFn = 1 occurred during PWM output smooth start execution (TKBRDT0 = 1))

TKBIRF0	Undetected restart trigger source 1 trigger error flag for interleave PFC mode
0	No error, or completion of clearing by TKBCLIR0
1	Error (Includes a period that restart trigger source 1 trigger is not detected in the range of T/2 + T/n (n = 8, 16, 32, 64))

TKBIEF0	Restart trigger source 1 trigger multiplex detection error flag for interleave PFC mode
0	No error, or completion of clearing by TKBCLIE0
1	Error (Another count start trigger was detected during counting of the TKBO01-0, TKBO01-1, TKBO01-2 width)

TKBMFF0	Status flag for maximum frequency limit function
0	Maximum frequency limit function is not occurred, or completion of clearing by TKBCLMF0
1	Maximum frequency limit function is occurred

TKBRSF0	Batch overwrite trigger pending status flag
0	Batch overwrite enabled status or completion of batch overwrite caused by batch overwrite trigger
1	On hold (waiting for completion) status of batch overwrite due to writing to batch overwrite trigger bit TKBRDT0

Remarks 1. n = 0, 1

2. T is the period of the last restart

7.3.8 16-bit timer KB2 trigger register 0 (TKBTRG0)

TKBTRG0 is a trigger register used for batch overwriting of the compare register for 16-bit timer KB20.

TKBTRG0 can be set by a 1-bit or 8-bit memory manipulation instruction.

Reset signal generation clears this register to 00H.

Figure 7-10. Format of 16-bit Timer KB2 Trigger Register 0 (TKBTRG0)

Address: F0512H After reset: 00H R/W

Symbol	7	6	5	4	3	2	1	<0>
TKBTRG0	0	0	0	0	0	0	0	TKBRDT0

TKBRDT0	Trigger for batch overwrite request of compare register
0	Invalid setting
1	Batch overwrite request of compare register

Remark The read value of TKBTRG0 is always 0.

7.3.9 16-bit timer KB2 flag clear trigger register 0 (TKBCLR0)

TKBCLR0 is a register used to clear flags in 16-bit timer KB2 flag register 0 (TKBFLG0).

TKBCLR0 can be written by a 1-bit or 8-bit memory manipulation instruction.

Reset signal generation clears this register to 00H.

Figure 7-11. Format of 16-bit Timer KB2 Flag Clear Trigger Register 0 (TKBCLR0)

Address: F0527H After reset: 00H W

Symbol	7	6	<5>	<4>	<3>	<2>	<1>	0
TKBCLR0	0	0	TKBCLSE01	TKBCLSE00	TKBCLIR0	TKBCLIE0	TKBCLMF0	0

TKBCLSE0n	Trigger for clearing error flag for PWM output smooth start function of TKBO00, TKBO01-0, TKBO01-1, TKBO01-2 pins
0	Invalid setting
1	Clear the TKBSEF01 flag to 0.

TKBCLIR0	Trigger for clearing undetected restart trigger source 1 trigger error flag for interleave PFC mode
0	Invalid setting
1	Clear the TKBIRF0 flag to 0.

TKBCLIE0	Trigger for clearing restart trigger source 1 trigger multiplex detection error flag for interleave PFC mode
0	Invalid setting
1	Clear the TKBIEF0 flag to 0.

TKBCLMF0	Trigger for clearing status flag for maximum frequency limit function
0	Invalid setting
1	Clear the TKBMFF0 flag to 0.

Caution Be sure to clear bits 7 and 6 to 0.

Remarks 1. n = 0, 1

2. The read value of TKBTRG0 is always 0.

7.3.10 16-bit timer KB2 dithering count registers 00, 01 (TKBDNR00, TKBDNR01)

TKBDNR0p is a register that is used by the PWM dithering function for TKBO00, TKBO01-0, TKBO01-1, TKBO01-2 output.

When the values of the higher 4 bits of this register are N (N = 0H to FH), the active period of N period cycles during the 16-period cycle of PWM output is output by extending one clock.

Figure 7-13 shows the relation among the TKBDNR0p setting and the repetitions (N) of the period cycle extending the active period by one clock and the ordinal of the period (the kth period) during the 16-period cycle to be extended.

TKBDNR0p can be set by an 8-bit memory manipulation instruction.

Reset signal generation clears this register to 00H.

Figure 7-12. Format of 16-bit Timer KB2 Dithering Count Registers 00, 01 (TKBDNR00, TKBDNR01)

Address: F050EH (TKBDNR00), F0510H (TKBDNR01) After reset: 00H R/W

Symbol	7	6	5	4	3	2	1	0
TKBDNR0p					0	0	0	0

Caution Be sure to clear bits 3 to 0 to 0. The TKBDNR0p register can be rewritten during timer operation.

Remark p = 0, 1

Figure 7-13. 16-bit Timer KB2 Dithering Count Register 0p (TKBDNR0p) Setting

kth period / Repetitions (N)	k															
	1	2	3	4	5	6	7	8	9	10	11	12	13	14	15	16
0																
1	■															
2	■								■							
3	■				■				■							
4	■				■				■				■			
5	■		■		■				■				■			
6	■		■		■				■		■		■			
7	■		■		■		■		■		■		■			
8	■		■		■		■		■		■		■		■	
9	■	■	■		■		■		■		■		■		■	
10	■	■	■		■		■		■	■	■		■		■	
11	■	■	■		■	■	■		■	■	■		■		■	
12	■	■	■		■	■	■		■	■	■		■	■	■	
13	■	■	■	■	■	■	■		■	■	■		■	■	■	
14	■	■	■	■	■	■	■		■	■	■	■	■	■	■	
15	■	■	■	■	■	■	■	■	■	■	■	■	■	■	■	

Remarks 1. □ cell: Set to active period according to settings in TKBCR01 and TKBCR03 registers

■ cell: Set to active period according to “settings + 1” in TKB0CR1 and TKBCR03 registers

2. p = 0, 1

7.3.11 16-bit timer KB2 compare 1L & dithering count register 00 (TKBCRLD00)

TKBCRLD00 is a register that stores the “lower 8 bits of TKBCR01 register” values in its higher 8 bits and the “TKBDNR00 register” values in its lower 8 bits.

TKBCRLD00 can be set by a 16-bit memory manipulation instruction.

Reset signal generation clears this register to 0000H.

Figure 7-14. Format of 16-bit Timer KB2 Compare 1L & Dithering Count Register 00 (TKBCRLD00)

Address: F0514H After reset: 0000H R/W

Symbol	15	14	13	12	11	10	9	8	7	6	5	4	3	2	1	0
TKBCRLD00													0	0	0	0

Lower 8 bits of TKBCR01 register TKBDNR00 register

Caution Be sure to clear bits 3 to 0 to 0. The TKBDNR0p register can be rewritten during timer operation.

7.3.12 16-bit timer KB2 compare 3L & dithering count register 01 (TKBCRLD01)

TKBCRLD01 is a register that stores the “lower 8 bits of TKBCR03 register” values in its higher 8 bits and the “TKBDNR01 register” values in its lower 8 bits.

TKBCRLD01 can be set by a 16-bit memory manipulation instruction.

Reset signal generation clears this register to 0000H.

Figure 7-15. Format of 16-bit Timer KB2 Compare 3L & Dithering Count Register 01 (TKBCRLD01)

Address: F0516H After reset: 0000H R/W

Symbol	15	14	13	12	11	10	9	8	7	6	5	4	3	2	1	0
TKBCRLD01													0	0	0	0

Lower 8 bits of TKBCR03 register TKBDNR01 register

Caution Be sure to clear bits 3 to 0 to 0. The TKBDNR0p register can be rewritten during timer operation.

7.3.13 16-bit timer KB2 smooth start initial duty registers 00, 01 (TKBSIR00, TKBSIR01)

TKBSIR0p is a register that sets the default duty for the PWM output smooth start function for TKBO00, TKBO01-0, TKBO01-1, TKBO01-2 output.

TKBSIR0p can be set by a 16-bit memory manipulation instruction.

Reset signal generation clears this register to 0000H.

Figure 7-16. Format of 16-bit Timer KB2 Smooth Start Initial Duty Registers 00, 01 (TKBSIR00, TKBSIR01)

Address: F050AH (TKBSIR00), F050CH (TKBSIR01) After reset: 0000H R/W

Symbol	15	14	13	12	11	10	9	8	7	6	5	4	3	2	1	0
TKBSIR0p																

Caution The TKBSIR0p can be rewritten during timer operation.

Remark p = 0, 1

7.3.14 16-bit timer KB2 smooth start step width registers 00, 01 (TKBSSR00, TKBSSR01)

TKBSSR0p is a register that is used by the PWM output smooth start function for TKBO00, TKBO01-0, TKBO01-1, TKBO01-2 output.

When the value of this register is N (N = 0000B to 1111B), output of a PWM with the active output period is continued for N + 1 times by setting TKBSIR0p. Afterward, output continues with the (active period + 1 clock) waveform for N + 1 cycles, then with the (active period + 2 clock) waveform for N + 1 cycles, and so on. Finally, when TKBCR01 and TKBCR03 have the same duty, the PWM output smooth start function is cleared and normal PWM output is set.

TKBSSR0p can be set by an 8-bit memory manipulation instruction.

Reset signal generation clears this register to 00H.

Figure 7-17. Format of 16-bit Timer KB2 Smooth Start Step Width Registers 00, 01 (TKBSSR00, TKBSSR01)

Address: F050FH (TKBSSR00), F0511H (TKBSSR01) After reset: 00H R/W

Symbol	7	6	5	4	3	2	1	0
TKBSSR0p	0	0	0	0				

Caution Be sure to clear bits 7 to 4 to 0. The TKBSSR0p can be rewritten during timer operation.

Remark p = 0, 1

7.3.15 16-bit timer KB2 maximum frequency limit setting register 0 (TKBMFR0)

TKBMFR0 is a register that sets the minimum period for the timer restart of external trigger.

When the counter (TKBCNT0) value is smaller than this TKBMFR0 value, if trigger input is detected, the trigger is held pending, and the counter (TKBCNT0) is cleared (restart) after counting to the value set to TKBMFR0.

TKBMFR0 can be set by a 16-bit memory manipulation instruction.

Reset signal generation clears this register to 0000H.

Figure 7-18. Format of 16-bit Timer KB2 Maximum Frequency Limit Setting Register 0 (TKBMFR0)

Address: F0524H After reset: 0000H R/W

Symbol	15	14	13	12	11	10	9	8	7	6	5	4	3	2	1	0
TKBMFR0																

Do not rewrite the TKBMFR0 register during timer operation. However, the TKBMFR0 register can be refreshed (the same value can be written).

7.3.16 16-bit timer KB2 counter restart select register (ELSELRn)

ELSELRn is a register that is used to assign counter restart trigger sources 2 to 0 and the PWM output function for IH control restart trigger source to each external restart trigger (external triggers 7 to 0 and comparator detection 1, 0).

Reset signal generation clears this register to 00H.

Figure 7-19. Format of 16-bit Timer KB2 Counter Restart Select Register (ELSELRn)

Address: F01E0H (ELSELR00), F01E1H (ELSELR01), F01E2H (ELSELR02), F01E3H (ELSELR03)
F01E4H (ELSELR04), F01E5H (ELSELR05), F01E6H (ELSELR06), F01E7H (ELSELR07)
F01E8H (ELSELR08), F01E9H (ELSELR09) After reset: 00H R/W

Symbol	7	6	5	4	3	2	1	0
ELSELRn	0	0	0	0	0	ELSELRn2	ELSELRn1	ELSELRn0

ELSELRn2	ELSELRn1	ELSELRn0	Restart Source	Operation after Restart
0	0	0	None	None
0	0	1	TMKB2 counter restart trigger source 0	Timer output restart Batch overwrite of compare registers
0	1	0	TMKB2 counter restart trigger source 1	
0	1	1	TMKB2 counter restart trigger source 2	
1	0	0	TMBK2 IH-PWM output restart request signal	IH-PWM output restart
Other than above			Setting prohibited	

Caution Be sure to set bits 7 to 3 to 0. Do not rewrite the ELSELRn register during timer operation. However, the ELSELRn register can be refreshed (the same value can be written).

Remark n = 00 to 09

The following lists the correspondence between each event and the ELSELRn register.

Count Restart Trigger Input	Corresponding Register
External interrupt 0 (INTP0)	ELSELR00
External interrupt 1 (INTP1)	ELSELR01
External interrupt 2 (INTP2)	ELSELR02
External interrupt 3 (INTP3)	ELSELR03
External interrupt 4 (INTP4)	ELSELR04
External interrupt 5 (INTP5)	ELSELR05
External interrupt 6 (INTP6)	ELSELR06
External interrupt 7 (INTP7)	ELSELR07
Comparator detection 0	ELSELR08
Comparator detection 1	ELSELR09

Cautions 1. Do not specify multiple count restart trigger inputs as one restart trigger source.

2. When the signal output from comparator 0 or 1 is selected as the IH-PWM output restart request signal, set the C1EDG, C1EPO, C0EDG, and C0EPO bits of the comparator filter control register (COMPFIR) to “0”.

3. The external interrupt request signals (INTP0 to INTP7), which are used as TMKB2 count restart triggers 0 to 2 and IH-PWM output restart request signals, are not affected by the setting of the external interrupt rising edge enable register (EGP0) and external interrupt falling edge enable register (EGN0).

7.3.17 16-bit timer KB2 output switch register (PWCTKB)

This register is used to select the output of the TKBO01-0, TKBO01-1, and TKBO01-2 pins.

The PWCTKB register can be set by an 8-bit memory manipulation instruction.

Reset signal generation clears this register to 00H.

Figure 7-20. Format of 16-bit Timer KB2 Output Switch Register (PWCTKB)

Address: F007CH After reset: 00H R/W

Symbol	7	6	5	4	3	2	1	0
PWCTKB	0	0	0	0	0	0	TKBPWO1	TKBPWO0

TKBPWO1	TKBPWO0	Timer KB2 output switch
0	0	TKBO01-0 selected for output
0	1	TKBO01-1 selected for output
1	0	TKBO01-2 selected for output
1	1	Setting prohibited

Cautions 1. Do not rewrite the PWCTKB register during timer operation. However, the PWCTKB register can be refreshed (the same value can be written).

2. Be sure to set bits 7 to 2 to 0.

7.3.18 Forced output stop function control register 0 (TKBPACTL00)

TKBPACTL00 is a register that selects the signal to be used as the trigger to control the forced output stop function for the TKBO00 pin.

TKBPACTL00 can be set by a 16-bit memory manipulation instruction.

Reset signal generation clears this register to 0000H.

Figure 7-21. Format of Forced Output Stop Function Control Register 0 (TKBPACTL00) (1/2)

Address: F0530H After reset: 0000H R/W

Symbol	15	14	13	12	11	10	9	8
TKBPACTL00	TKBPAFXS003	TKBPAFXS002	TKBPAFXS001	TKBPAFXS000	0	0	0	TKBPAFCM00
	7	6	5	4	3	2	1	0
	0	TKBPAHZS002	TKBPAHZS001	TKBPAHZS000	TKBPAHCM001	TKBPAHCM000	TKBPAMD001	TKBPAMD000

TKBPAFXS003	Trigger input selection for forced output stop function 2 (3)
0	INTP2 not used as trigger
1	INTP2 used as trigger

TKBPAFXS002	Trigger input selection for forced output stop function 2 (2)
0	INTP1 not used as trigger
1	INTP1 used as trigger

TKBPAFXS001	Trigger input selection for forced output stop function 2 (1)
0	Comparator detection 1 not used as trigger
1	Comparator detection 1 used as trigger

TKBPAFXS000	TKBCTL00	Trigger input for forced output stop function 2 (0)
	TKBIHE0	
0	–	INTP0 and comparator 0 detection not used as trigger
1	0	Comparator detection 0 used as trigger
Other than above		Setting prohibited

TKBPAFCM00	Operation mode selection for forced output stop function 2
0	Forced output stop function 2 is started when forced output stop input 2 is detected. Forced output stop function 2 is cancelled in synchronization with the next restart of the counter.
1	Forced output stop function 2 is started when forced output stop input 2 is detected. After cancellation of the trigger is detected, forced output stop function is cancelled in synchronization with the next restart of the counter.

TKBPAHZS002	Trigger input selection for forced output stop function 1 (2)
0	INTP1 not used as trigger
1	INTP1 used as trigger

Caution The TKBPACTL00 register cannot be used when using the PWM output function for IH control. When using the PWM output function for IH control, be sure to set this register to its initial value (0000H).

Figure 7-21. Format of Forced Output Stop Function Control Register 0 (TKBPACTL00) (2/2)

Address: F0530H After reset: 0000H R/W

Symbol	15	14	13	12	11	10	9	8
TKBPACTL00	TKBPAFXS003	TKBPAFXS002	TKBPAFXS001	TKBPAFXS000	0	0	0	TKBPAFCM00
	7	6	5	4	3	2	1	0
	0	TKBPAHZS002	TKBPAHZS001	TKBPAHZS000	TKBPAHCM001	TKBPAHCM000	TKBPAMD001	TKBPAMD000

TKBPAHZS000	TKBCTL00 TKBIHE0	Trigger input selection for forced output stop function 1 (0)
0	–	INTP0 and comparator 0 detection not used as trigger
1	0	Comparator detection 0 used as trigger
Other than above		Setting prohibited

TKBPAHCM001	TKBPAHCM000	Operation mode selection for forced output stop function 1
0	0	Forced output stop function 1 is started when forced output stop input 1 is detected. Forced output stop function 1 is cancelled when TKBPAHTT0 is set to 1, regardless of the level of the input.
0	1	Forced output stop function 1 is started when forced output stop input 1 is detected. After the input is cancelled, forced output stop function 1 is cancelled when TKBPAHTT0 is set to 1. Setting TKBPAHTT0 = 1 is invalid during the active period of the input.
1	0	Forced output stop function 1 is started when forced output stop input 1 is detected. After TKBPAHTT0 is set to 1, forced output stop function 1 is cancelled in synchronization with the next restart of the counter, regardless of the level of the input.
1	1	Forced output stop function 1 is started when forced output stop input 1 is detected. After the input is cancelled, forced output stop function 1 is cancelled in synchronization with the next restart of the counter after TKBPAHTT0 is set to 1. Setting TKBPAHTT0 = 1 is invalid during the active period of the input.

TKBPAMD001	TKBPAMD000	Output status selection when executing forced output stop function	
		Forced output stop function 1	Forced output stop function 2
0	0	High-impedance output	Output fixed at low level
0	1	High-impedance output	Output fixed at high level
1	0	Output fixed at low level	Output fixed at low level
1	1	Output fixed at high level	Output fixed at high level

Cautions 1. The TKBPACTL00 register cannot be used when using the PWM output function for IH control. When using the PWM output function for IH control, be sure to set this register to its initial value (0000H).

2. Be sure to clear bits 11 to 9 and 7 to 0. Do not rewrite the TKBPACTL00 register during timer operation. However, the TKBPACTL00 register can be refreshed (the same value can be written).

3. INTP1 and INTP2, which are used to trigger forced output stop functions 1 and 2, are not affected by the setting of the external interrupt rising edge enable register (EGP0) and external interrupt falling edge enable register (EGN0). Only the rising edge is valid. Use the TKBEGPB0 and TKBEGNB0 bits of 16-bit timer KB2 output control register 01 (TKBIOC01) to select the valid edge of the INTP0 signal used by forced output stop functions 1 and 2.

7.3.19 Forced output stop function control register 1 (TKBPACTL01)

TKBPACTL01 is a register that selects the signal to be used as the trigger to control the forced output stop function for the TKBO01-0, TKBO01-1, and TKBO01-2 pins.

TKBPACTL01 can be set by a 16-bit memory manipulation instruction.

Reset signal generation clears this register to 0000H.

Figure 7-22. Format of Forced Output Stop Function Control Register 1 (TKBPACTL01) (1/2)

Address: F0532H After reset: 0000H R/W

Symbol	15	14	13	12	11	10	9	8
TKBPACTL01	TKBPAFXS013	TKBPAFXS012	TKBPAFXS011	TKBPAFXS010	0	0	0	TKBPAFCM01
	7	6	5	4	3	2	1	0
	0	TKBPAHZS012	TKBPAHZS011	TKBPAHZS010	TKBPAHCM011	TKBPAHCM010	TKBPAMD011	TKBPAMD010

TKBPAFXS013	Trigger input selection for forced output stop function 2 (3)
0	INTP2 not used as trigger
1	INTP2 used as trigger

TKBPAFXS012	Trigger input selection for forced output stop function 2 (2)
0	INTP1 not used as trigger
1	INTP1 used as trigger

TKBPAFXS011	Trigger input selection for forced output stop function 2 (1)
0	Comparator detection 1 not used as trigger
1	Comparator detection 1 used as trigger

TKBPAFXS010	TKBCTL00	Trigger input for forced output stop function 2 (0)
	TKBIHE0	
0	–	INTP0 and comparator 0 detection not used as trigger
1	0	Comparator detection 0 used as trigger
Other than above		Setting prohibited

TKBPAFCM01	Operation mode selection for forced output stop function 2
0	Forced output stop function 2 is started when forced output stop input 2 is detected. Forced output stop function 2 is cancelled in synchronization with the next restart of the counter.
1	Forced output stop function 2 is started when forced output stop input 2 is detected. After the reverse edge of the trigger is detected, forced output stop function 2 is cancelled in synchronization with the next restart of the counter.

TKBPAHZS012	Input selection for forced output stop function 1 (2)
0	INTP1 not used as trigger
1	INTP1 used as trigger

Caution Only bit 4 (TKBPAHZS010) of the TKBPACTL01 register can be used when using the PWM output function for IH control. When using the PWM output function for IH control, be sure to set the other bits in this register to their initial value (0).

Figure 7-22. Format of Forced Output Stop Function Control Register 1 (TKBPACTL01) (2/2)

Address: F0532H After reset: 0000H R/W

Symbol	15	14	13	12	11	10	9	8
TKBPACTL01	TKBPAFXS013	TKBPAFXS012	TKBPAFXS011	TKBPAFXS010	0	0	0	TKBPAFCM01
	7	6	5	4	3	2	1	0
	0	TKBPAHZS012	TKBPAHZS011	TKBPAHZS010	TKBPAHCM011	TKBPAHCM010	TKBPAMD011	TKBPAMD010

TKBPAHZS011	Trigger input selection for forced output stop function 1 (1)[Note]
0	Comparator detection 1 not used as trigger
1	Comparator detection 1 used as trigger

TKBPAHZS010	TKBCTL00	TKBIOC01	Trigger input selection for forced output stop function 1 (0) [Note]
	TKBIHE0	TKBNFB0	
0	–	–	INTP0 and comparator 0 detection not used as trigger
1	0	–	Comparator detection 0 used as trigger
1	1	0	INTP0 without noise filtering used as trigger
1	1	1	INTP0 with noise filtered used as trigger

TKBPAHCM011	TKBPAHCM010	Operation mode selection for forced output stop function 1
0	0	Forced output stop function 1 is started when forced output stop input 1 is detected. Forced output stop function 1 is cancelled when TKBPAHTT01 is set to 1, regardless of the level of the input.
0	1	Forced output stop function 1 is started when forced output stop input 1 is detected. After the input is cancelled, forced output stop function 1 is cancelled when TKBPAHTT01 is set to 1. Setting TKBPAHTT01 = 1 invalid during the active period of the input.
1	0	Forced output stop function 1 is started when forced output stop input 1 is detected. After TKBPAHTT1 is set to 1, forced output stop function 1 is cancelled with the next restart of the counter, regardless of the level of the input.
1	1	Forced output stop function 1 is started when forced output stop input 1 is detected. After the input is cancelled, forced output stop function 1 is cancelled with the next restart of the counter after TKBPAHTT1 is set to 1. Setting TKBPAHTT1 = 1 is invalid during the active period of the input.

TKBPAMD011	TKBPAMD010	Output status selection when executing forced output stop function	
		Forced output stop function 1	Forced output stop function 2
0	0	High-impedance output	Output fixed at low level
0	1	High-impedance output	Output fixed at high level
1	0	Output fixed at low level	Output fixed at low level
1	1	Output fixed at high level	Output fixed at high level

Note When using INTP0 as a trigger, input it for at least two f_{CLK} cycles. In addition, setting TKBPAHCM010 to 1 is prohibited when using the comparator 0 or 1 detection signal as a trigger while the C0EDG and C1EDG bits of the comparator filter control register (COMPFIR) are 1 (both-edge detection). Be sure to set TKBPAHCM010 to 0.

Cautions 1. Be sure to clear bits 11 to 9 and 7 to 0. Do not rewrite the TKBPACTL00 register during timer operation. However, the TKBPACTL00 register can be refreshed (the same value can be written).

2. INTP1 and INTP2, which are used to trigger forced output stop functions 1 and 2, are not affected by the setting of the external interrupt rising edge enable register (EGP0) and external interrupt falling edge enable register (EGN0). Only the rising edge is valid. Use the TKBEGPB0 and TKBEGNB0 bits of 16-bit timer KB2 output control register 01 (TKBIOC01) to select the valid edge of the INTP0 signal used by forced output stop function 1.

3. Only bit 4 (TKBPAHZS010) of the TKBPACTL01 register can be used when using the PWM output function for IH control. When using the PWM output function for IH control, be sure to set the other bits in this register to their initial value (0).

7.3.20 Forced output stop function control register 2 (TKBPACTL02)

TKBPACTL02 is a register that enables or disables the forced output stop function.

TKBPACTL02 can be set by a 1-bit or 8-bit memory manipulation instruction.

Reset signal generation clears this register to 00H.

Figure 7-23. Format of Forced Output Stop Function Control Register 2 (TKBPACTL02)

Address: F0537H After reset: 00H R/W

Symbol	7	6	5	4	3	2	1	0
TKBPACTL02	0	0	0	0	0	0	TKBPACE01	TKBPACE00

TKBPACE01	Control of forced output stop function for TKBO01-0, TKBO01-1, TKBO01-2 pins
0	Disables the forced output stop function.
1	Enables the forced output stop function.

TKBPACE00	Control of forced output stop function for TKBO00 pin
0	Disables the forced output stop function.
1	Enables the forced output stop function.

Cautions 1. Be sure to clear bits 7 to 2 to 0. The TKBPACTL02 register can be rewritten during timer operation.

2. Bit 0 (TKBPAHTT00) of the TKBPAHFT0 register cannot be used when using the PWM output function for IH control. When using the PWM output function for IH control, be sure to set this bit to its initial value (0).

7.3.21 Forced output stop function flag register (TKBPAFLG0)

TKBPAFLG0 is a register with status flags for the forced output stop function.

TKBPAFLG0 can be set by a 1-bit or 8-bit memory manipulation instruction.

Reset signal generation clears this register to 00H.

Figure 7-24. Format of Forced Output Stop Function Flag Register (TKBPAFLG0)

Address: F0536H After reset: 00H R

Symbol	<7>	<6>	<5>	<4>	<3>	<2>	<1>	<0>
TKBPAFLG0	TKBPAFSF01	TKBPAHSF01	TKBPAFSF00	TKBPAHSF00	TKBPAFIF01	TKBPAHIF01	TKBPAFIF00	TKBPAHIF00

TKBPAFSF01	Status flag of forced output stop function 2 for TKBO01-0, TKBO01-1, TKBO01-2 pins
0	Forced output stop canceled
1	Forced output stopped

TKBPAHSF01	Status flag of forced output stop function 1 for TKBO01-0, TKBO01-1, TKBO01-2 pins
0	Forced output stop canceled
1	Forced output stop stopped

TKBPAFSF00	Status flag of forced output stop function 2 for TKBO00 pin
0	Forced output stop canceled
1	Forced output stop stopped

TKBPAHSF00	Status flag of forced output stop function 1 for TKBO00 pin
0	Forced output stop cancel status
1	Forced output stop status

TKBPAFIF01	Status flag of forced output stop input 2 for TKBO01-0, TKBO01-1, TKBO01-2 pins
0	Forced output stop input 2 is inactive level
1	Forced output stop input 2 is active level

TKBPAHIF01	Status flag of forced output stop input 1 for TKBO01-0, TKBO01-1, TKBO01-2 pins
0	Forced output stop input 1 is inactive level
1	Forced output stop input 1 is active level

TKBPAFIF00	Status flag of forced output stop input 2 for TKBO00 pin
0	Forced output stop input 2 is inactive level
1	Forced output stop input 2 is active level

TKBPAHIF00	Status flag of forced output stop input 1 for TKBO00 pin
0	Forced output stop input 1 is inactive level
1	Forced output stop input 1 is active level

Cautions 1. Status flags TKBPAHIF00, TKBPAFIF00, TKBPAHIF01, and TKBPAFIF01 cannot be used when using the comparator 0 or 1 detection signal as a trigger while the C0EDG and C1EDG bits of the comparator filter control register (COMPFIR) are 1 (both-edge detection).

2. Only bit 6 (TKBPAHSF01) of the TKBPAFLG0 register can be used when using the PWM output function for IH control. Do not use the other status flags.

7.3.22 Forced output stop function 1 start register (TKBPAHFS0)

TKBPAHFS0 is used to start forced output stop function 1.

TKBPAHFS0 can be set by a 1-bit or 8-bit memory manipulation instruction.

Reset signal generation clears this register to 00H.

Figure 7-25. Format of Forced Output Stop Function 1 Start Register (TKBPAHFS0)

Address: F0534H After reset: 00H R/W

Symbol	7	6	5	4	3	2	1	0
TKBPAHFS0	0	0	0	0	0	0	TKBPAHTS01	TKBPAHTS00

TKBPAHTS01	Start of forced output stop function 1 for TKBO01-0, TKBO01-1, TKBO01-2 pins
0	Writing 0 is invalid.
1	Starts forced output stop function 1 for TKBO01-0, TKBO01-1, TKBO01-2 pins.

TKBPAHTS00	Start of forced output stop function 1 for TKBO00 pin
0	Writing 0 is invalid.
1	Starts forced output stop function 1 for TKBO00 pin.

Cautions 1. Be sure to clear bits 7 to 2 to 0. The TKBPAHFS0 register can be rewritten during timer operation.
The read value is 0.

2. The TKBPAHFS0 register cannot be used when using the PWM output function for IH control. When using the PWM output function for IH control, be sure to set this register to its initial value (00H).

Remark The read value of TKBPAHFS0 is always 0.

7.3.23 Forced output stop function 1 stop register (TKBPAHFT0)

TKBPAHFT0 is used to stop forced output stop function 1.

TKBPAHFT0 can be set by a 1-bit or 8-bit memory manipulation instruction.

Reset signal generation clears this register to 00H.

Figure 7-26. Format of Forced Output Stop Function 1 Stop Register (TKBPAHFT0)

Address: F0535H After reset: 00H R/W

Symbol	7	6	5	4	3	2	1	0
TKBPAHFT0	0	0	0	0	0	0	TKBPAHTT01	TKBPAHTT00

TKBPAHTT01	Stop of forced output stop function 1 for TKBO01-0, TKBO01-1, TKBO01-2 pins
0	Writing 0 is invalid.
1	Stops forced output stop function 1 for TKBO01-0, TKBO01-1, TKBO01-2 pins.

TKBPAHTT00	Stop of forced output stop function 1 for TKBO00 pin
0	Writing 0 is invalid.
1	Stops forced output stop function 1 for TKBO00 pin.

Cautions 1. Be sure to clear bits 7 to 2 to 0. The TKBPAHFT0 register can be rewritten during timer operation.
The read value is 0.

2. Bit 0 (TKBPAHTT00) of the TKBPAHFT0 register cannot be used when using the PWM output function for IH control. When using the PWM output function for IH control, be sure to set this bit to its initial value (0).

Remark The read value of TKBPAHFT0 is always 0.

When the TKBPAHCM001 and TKBPAHCM000 bits are 10 or 11, forced output function 1 is cancelled when the TMKB hardware macro period is generated after TKBPAHTT0n is set to 1.

For details on the operation when forced output stop input is detected or TKBPAHTS0n is set to 1 during the period after TKBPAHTT0n is set to 1 and before the TMKB hardware macro period is generated, see **7.7.3 Notes on using forced output stop function 1**.

7.3.24 Registers controlling port functions of 16-bit timer KB2 output pins

When using 16-bit timer KB20, set the registers that control the port functions multiplexed on the target pins (LCD port function register (PFSEGx), port mode register (PMxx), and port register (Pxx)). For details, see **4.3.9 LCD port function registers 0 to 6 (PFSEG0 to PFSEG6)**, **4.3.1 Port mode registers (PMxx)**, and **4.3.2 Port registers (Pxx)**.

When using the ports (such as P74/TKBO00) to be shared with the 16-bit timer KB20 output pins for 16-bit timer KB20 output, set the LCD port function register (PFSEGx) bit, port mode register (PMxx) bit, and port register (Pxx) bit corresponding to each port to 0.

Example: When using P74/TKBO00 for 16-bit timer KB20 output

Set the PFSEG16 bit of LCD port function register (PFSEG2) to 0.

Set the PM74 bit of port mode register (PM7) to 0.

Set the P74 bit of port register (P7) to 0.

7.4 Operation of 16-bit Timer KB20

Operation specifications of 16-bit timer KB20 are described below.

- Counter basic operation (see **7.4.1**)
- Default level and active level (see **7.4.2**)
- Stop/restart operation (see **7.4.3**)
- Batch overwrite operation (see **7.4.4**)

There are three operation modes for 16-bit timer KB20.

- Standalone mode (period controlled by TKBCR00) (see **7.4.5**)
- Standalone mode (period controlled by external trigger input) (see **7.4.6**)
- Interleave PFC (power factor correction) output mode (see **7.4.7**)

7.4.1 Counter basic operation

(1) Count start operation

In any mode, the 16-bit counter of timer KB20 starts counting from its initial value (FFFFH). The counter increments from FFFFH to 0000H, 0001H, 0002H, 0003H and so on.

(2) Clear operation

The 16-bit counter is cleared to 0000H when the 16-bit counter value matches the value defined in TKBCR00 or an external trigger is in effect if the period is determined by external triggers. An INTTKB2 interrupt occurs when the counter is cleared at the time when it matches the value defined in TKBCR00, but it does not occur when the counter is cleared by an external trigger.

7.4.2 Default level and active level

(1) Basic operation

The default level and active level can be specified for timer KB20 output by using 16-bit timer KB2 output control register 00 (TKBIOC00).

Figure 7-27. Timing of Default Level and Active Level (Basic Operation)

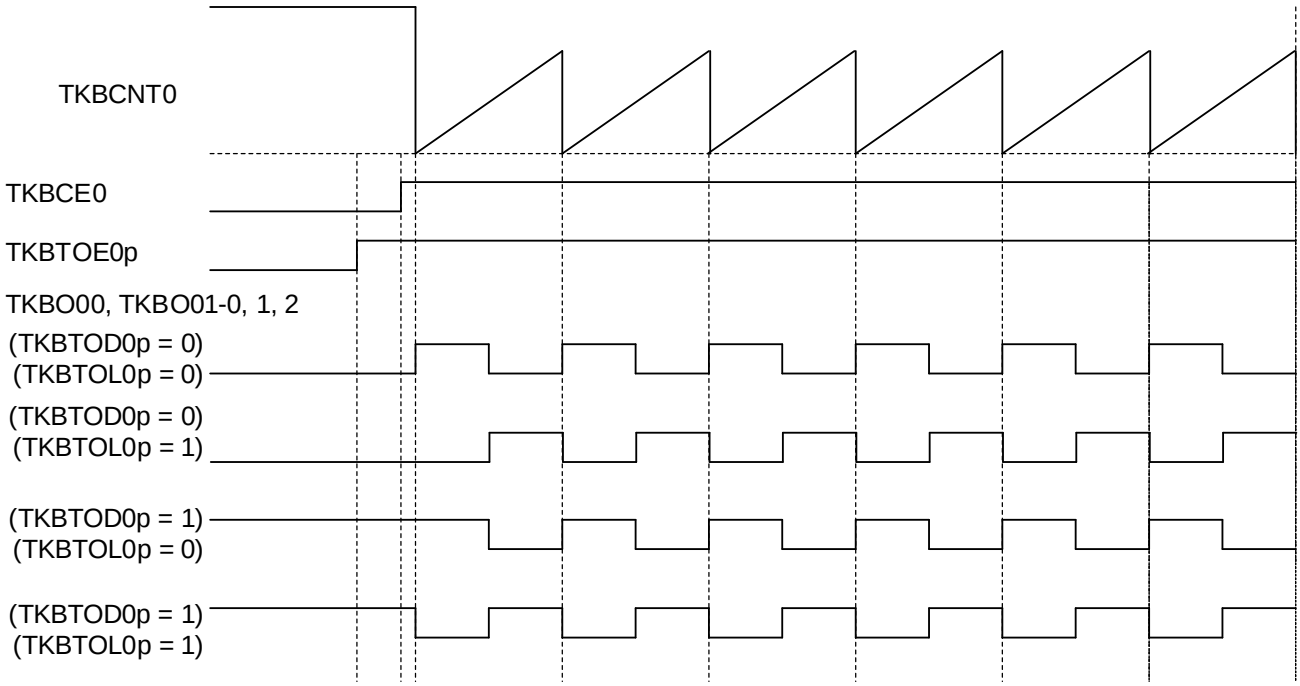

When TKBTOE0p is changed from 0 to 1, output from the TKBO00, TKBO01-0, TKBO01-1, and TKBO01-2 pins is enabled and the PWM waveform is output according to the TKBTOL0p setting.
When TKBTOE0p is changed from 1 to 0, output from TKBO01-0, TKBO01-1, and TKBO01-2 pins is disabled and the default level is output according to the TKBTOD0p setting.

Remark p = 0, 1

Caution When using the PWM output function for IH control, set the TKBTOL01 and TKBTOD01 bits = 00B or TKBTOL01 and TKBTOD01 bits = 11B.

(2) When TKBTOE0p is changed from 0 to 1

When TKBTOE0p is changed from 0 to 1 before the value of counter TKBCNT0 matches the value of the compare register (TKBCR01 to TKBCR03) while the timer counter is operating, the timer outputs the PWM waveform in accordance with the TKBTOL0p setting when the values match.

If TKBTOE0p is changed from 0 to 1 after the value of counter TKBCNT0 matches the value of compare register (TKBCR01 to TKBCR03), the timer output remains its default level until the next restart of the counter.

Figure 7-28. Timing of Default Level and Active Level
(When TKBTOE0p is changed from 0 to 1 before counter and compare register (TKBCR01 to TKBCR03) values match)

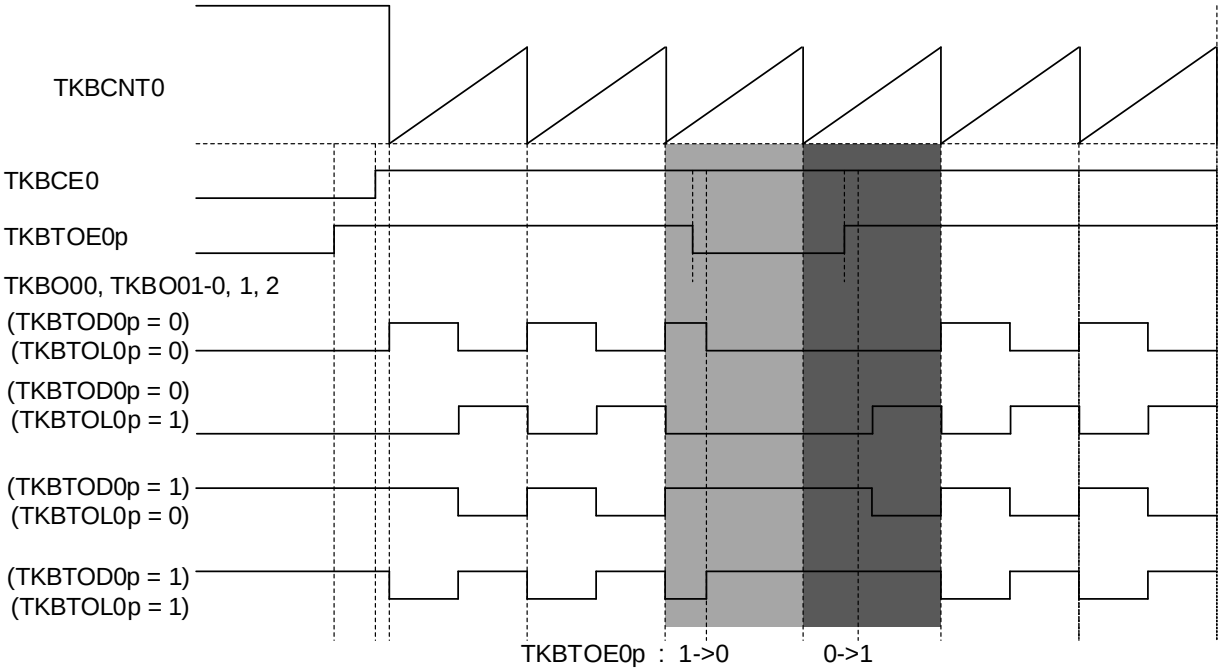

Figure 7-29. Timing of Default Level and Active Level
(When TKBTOE0p is changed from 0 to 1 after counter and compare register (TKBCR01 to TKBCR03) values match)

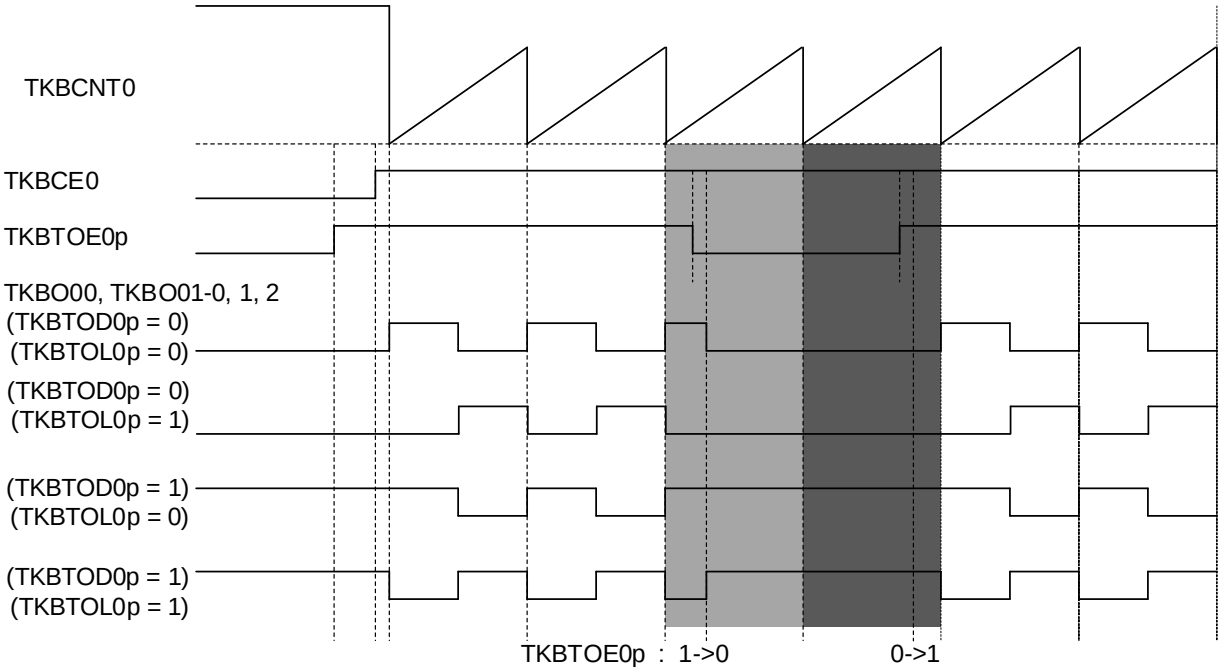

Remark p = 0, 1

(3) When TKBTOE0p is changed from 1 to 0

(a) Basic timing

TKBO00, TKBO01-0, TKBO01-1, and TKBO01-2 output the default level set by TKBTOD0p 1 f_{CLK} cycle after TKBTOE0p is changed from 1 to 0.

Figure 7-30. Timing of Default Level and Active Level
(When TKBTOE00 is changed from 1 to 0)

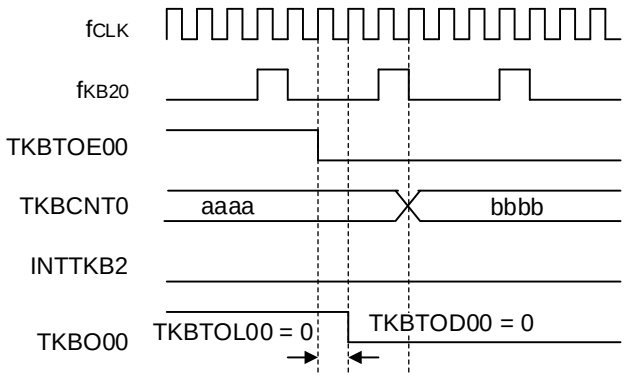

(b) When TKBCNT0 and TKBCR00 match at the same time as TKBTOE0p is cleared:

When TKBTOE0p is changed from 1 to 0 at the same time as TKBCNT0 and TKBCR00 match, the change of TKBTOE0p is given priority, and TKBO00, TKBO01-0, TKBO01-1, and TKBO01-2 keep outputting the default level set by TKBTOD0p.

Figure 7-31. Timing of Default Level and Active Level
(When TKBTOE0p is changed from 1 to 0 at the same time as TKBCNT0 and TKBCR00 match)

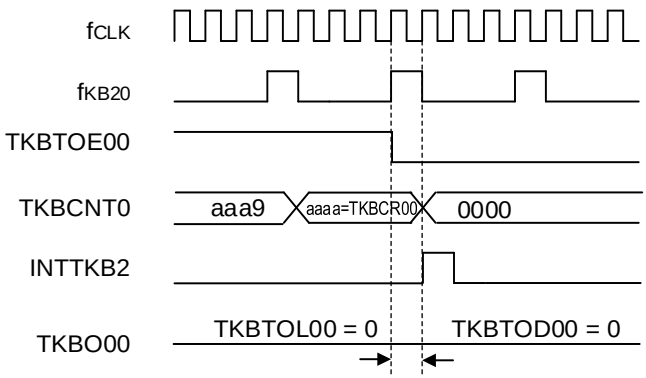

Remark p = 0, 1

(c) When TKBTOE0p is manipulated at the same time as the timer count clock is generated

When TKBTOE0p is manipulated at the same time as f_{KB20} is generated, TKBO00, TKBO01-0, TKBO01-1, and TKBO01-2 are set when TKBCNT0 and TKBCR00 match.

One f_{CLK} cycle later, TKBO00, TKBO01-0, TKBO01-1, and TKBO01-2 start outputting the default level set by TKBTOD0p.

Figure 7-32. Timing of Default Level and Active Level
(When TKBTOE00 is manipulated at the same time as the timer count clock is generated)

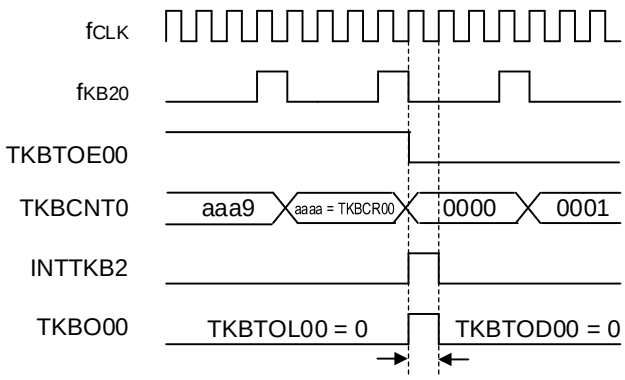

(4) When TKBTOD0p is changed while TKBTOE0p is 0

When TKBTOD0p is changed while TKBTOE0p is 0, TKBO00, TKBO01-0, TKBO01-1, and TKBO01-2 output the default level set by TKBTOD0p 1 f_{CLK} cycle later.

Figure 7-33. Timing of Default Level and Active Level
(When TKBTOD00 is changed while TKBTOE00 is 0)

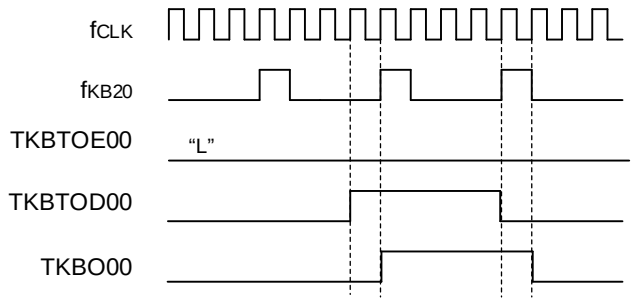

Remark p = 0, 1

7.4.3 Stop/restart operation

16-bit timer KB20 can be stopped and started by controlling TKBCE0.

16-bit timer KB20 is reset and stops operating when TKBCE0 is changed from 1 to 0.

Counter TKBCNT0 is reset to FFFFH and then stops operating.

TKBO00, TKBO01-0, TKBO01-1, and TKBO01-2 output the default level set by TKBTOD0p.

16-bit timer KB20 starts operating when TKBCE0 is changed from 0 to 1.

Counter TKBCNT0 maintains FFFFH while TKBCE0 is 0 and starts up counting when TKBCE0 is changed from 0 to 1.

Figure 7-34. Timing of Stop Operation (When TKBTOL0p = 0 and TKBTOD0p = 0)

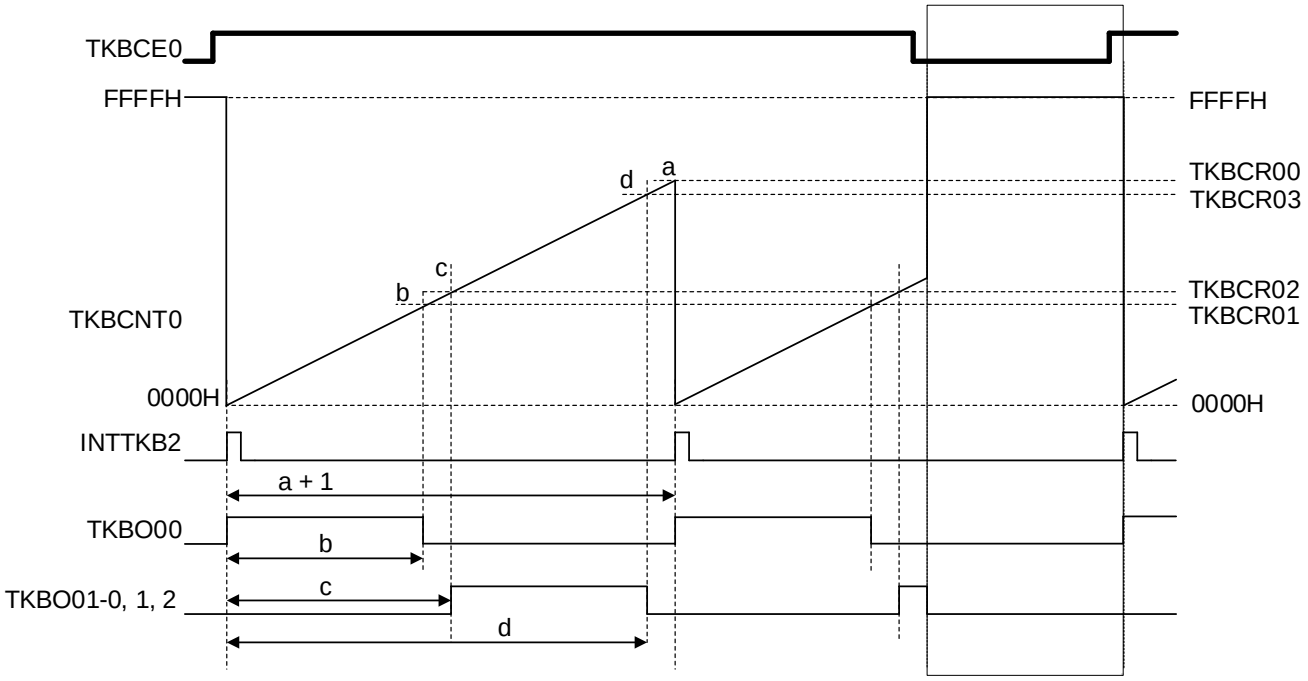

Remark p = 0, 1

(1) Counting start timing

Counting starts one f_{CLK} cycle (min.) to one f_{KB20} cycle (max.) after TKBCE0 is changed from 0 to 1.

INTTMKB2 is output when counting starts.

Figure 7-35. Timing of Start Operation (When TKBCE0 is changed from 0 to 1)

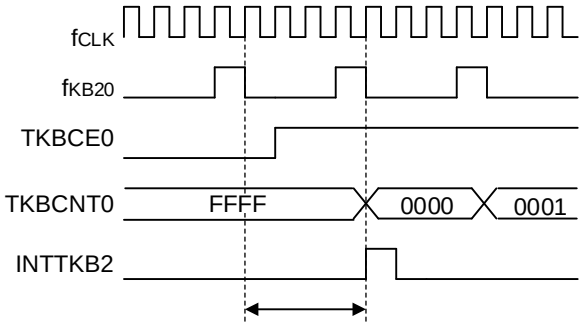

(2) Counting stop timing

(a) Basic timing

Counting stops one f_{CLK} cycle after TKBCE0 is changed from 1 to 0.

TKBCNT0 is reset to FFFFH and TKBO00, TKBO01-0, TKBO01-1, and TKBO01-2 output the default level set by TKBTOD0p.

Figure 7-36. Timing of Stop Operation (When TKBCE0 is changed from 1 to 0)

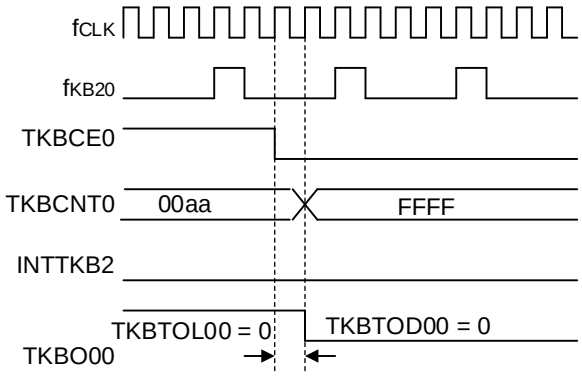

Remark p = 0, 1

(b) When TKBCNT0 and TKBCR00 match at the same time as TKBTOE0p is cleared

When TKBCE0 is changed from 1 to 0 at the same time as TKBCNT0 and TKBCR00 match, the change of TKBCNT0 is given priority, and TKBO00, TKBO01-0, TKBO01-1, and TKBO01-2 keep outputting their default level set by TKBTOD0p. At this time, INTTKB2 is not generated.

Figure 7-37. Timing of Stop Operation
(When TKBCE0 is changed from 1 to 0 at the same time as TKBCNT0 and TKBCR00 match)

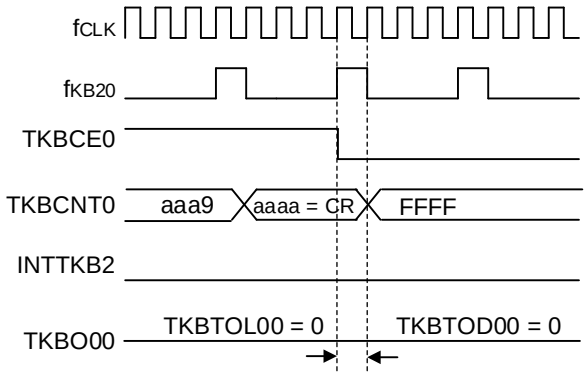

(c) When TKBCE0 is manipulated at the same time as the timer count clock is generated

When TKBCE0 is manipulated at the same time as f_{CLK} is generated, INTTKB2 is output when TKBCNT0 and TKBCR00 match, and then TKBO00, TKBO01-0, TKBO01-1, and TKBO01-2 are set.

One f_{CLK} cycle later, TKBCNT0 is reset to FFFFH and TKBO00, TKBO01-0, TKBO01-1, and TKBO01-2 output the default level set by TKBTOD0p.

Figure 7-38. Timing of Stop Operation
(When TKBCE0 is manipulated at the same time as the timer count clock is generated)

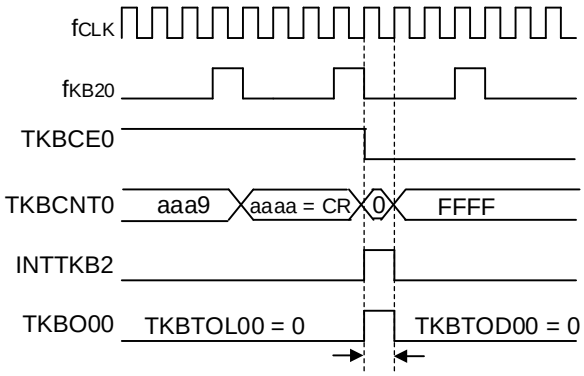

Remark p = 0, 1

7.4.4 Batch overwrite operation

As shown in Figure 7-39, 16-bit timer KB2 compare register 0p (TKBCR0p) for 16-bit timer KB20 has two stages. Therefore, its value is not applied immediately even if any value is set to TKBCR0p by a program. The value set to TKBCR0p at any timing is transferred at once to buffer registers when the counter starts running or when a transfer trigger occurs, and it is actually used for any comparison operation. This enables multiple compare registers to be set with each value at any timing.

Figure 7-39. Compare Register Batch Overwrite Function

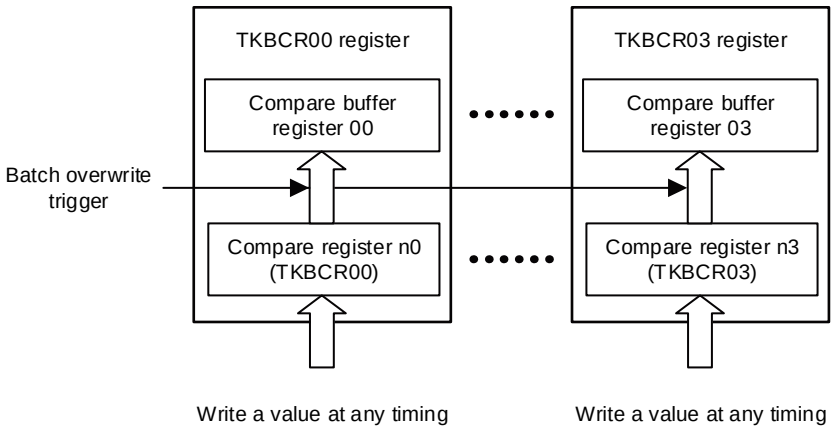

Remark As shown above, 16-bit timer KB2 compare register 0p (TKBCR0p) has two stages and is treated as a single register except when values are written to.

(1) Timing of batch overwrite

There are three cases when the compare registers are written all together. Among these, (c) can be controlled by configuration of the register.

(a) When starting count operation of 16-bit timer KB20
(b) The count value of the 16-bit counter and the value that is set to 16-bit timer KB2 compare register 00 (TKBCR00) match.
(c) An external trigger occurs while batch overwrite with an external trigger is enabled.

Remark p = 0 to 3

7.4.5 Standalone mode (period controlled by TKBCR00)

(1) Outline of functions

In standalone operation mode, the period is defined according to the value of TKBCR00, TKBO00 is generated by TKBCR00 and TKBCR01, and then TKBO01-0, TKBO01-1, and TKBO01-2 are generated by TKBCR02 and TKBCR03.

The duty can be set within a range of 0% to 100% and the period and duty can be calculated using the following formula.

[Calculation Formula for TKBO00 Output]
Pulse period = (TKBCR00 setting + 1) × Count clock period
Duty [%] = (TKBCR01 setting / (TKBCR00 setting + 1)) × 100
0% output: TKBCR01 setting = 0000H
100% output: TKBCR01 setting ≥ TKBCR00 setting + 1

[Calculation Formula for TKBO01-0, TKBO01-1, TKBO01-2 Output]
Duty [%] = ((TKBCR03 setting – TKBCR02 setting) / (TKBCR00 setting + 1)) × 100
0% output: TKBCR03 setting = TKBCR02 setting
100% output: TKBCR02 setting = 0000H
TKBCR03 setting ≥ TKBCR00 setting + 1

Caution It should always be: TKBCR02 setting ≤ TKBCR03 setting.

Figure 7-40 shows the configuration of standalone mode (period controlled by TKBCR00).

Figure 7-40. Configuration of Standalone Mode (Period Controlled by TKBCR00)

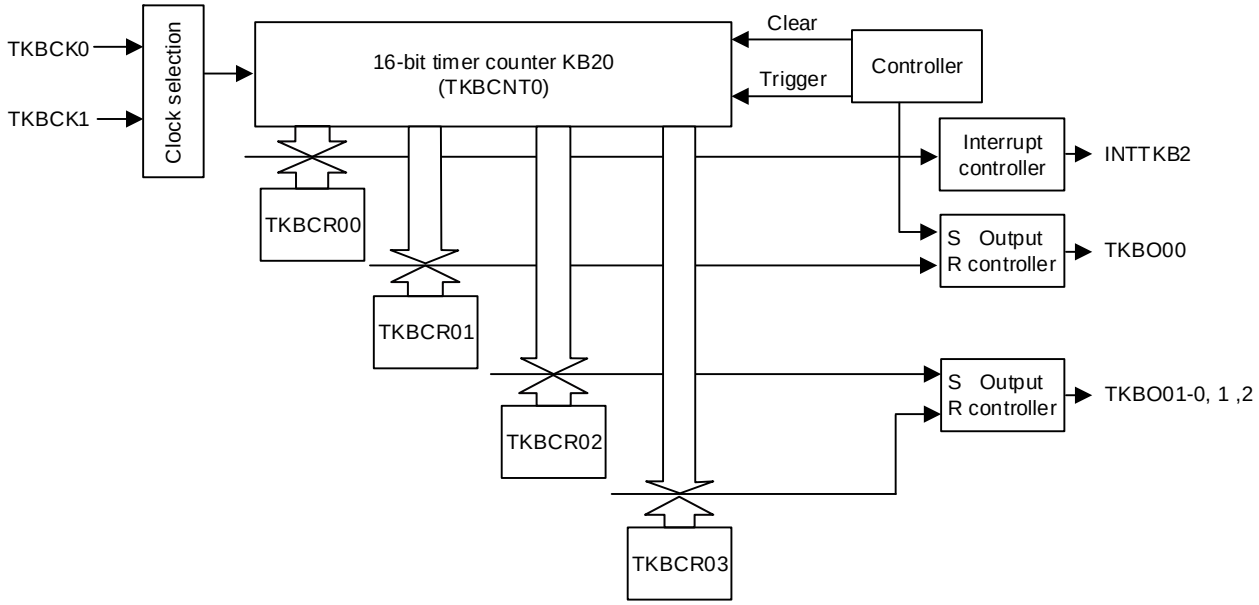

Remark Output from TKBO01-0, TKBO01-1, and TKBO01-2 is switched by the 16-bit timer KB2 switch register (PWCTKB).

(2) Outline of operation

Figure 7-41 shows the timing sample for standalone mode.

Figure 7-41. Timing Sample for Standalone Mode (Period Controlled by TKBCR00)
(When default value of output is low level (TKBTOD0p = 0) and active level is high level (TKBTOL0p = 0))

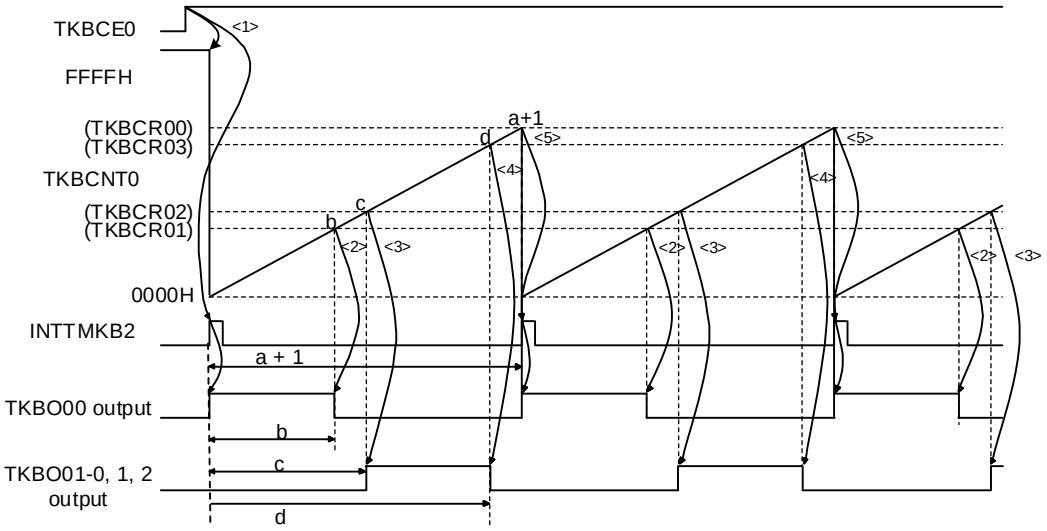

This section describes an example about the standalone operation (periodic controlled by TKBCR00). The following descriptions are linked with <1> to <5> in Figure 7-41.

<1> When TKBCE0 is set to 1, 16-bit timer counter KB2 (TKBCNT0) changes from FFFFH to 0000H in synchronization with the count clock, then it starts counting up. At the same time, INTTMKB2 output is generated and TKBO00 output changes from its default value specified with the TKB0TOD00 bit in TKB0IOC00 register to its active value (high level in this example) specified with the TKB0TOL00 bit (TKBO01-0, TKBO01-1, TKBO01-2 output holds its default value specified with the TKB0TOD01 bit).

<2> When TKBCNT0 is counted up and its value matches the value specified in 16-bit timer KB2 compare register 01 (TKBCR01), TKBO00 output becomes inactive level.

<3> When TKBCNT0 is counted up and its value matches the value specified in 16-bit timer KB2 compare register 02 (TKBCR02), TKBO01-0, TKBO01-1, TKBO01-2 output becomes active level.

<4> When TKBCNT0 is counted up and its value matches the value specified in 16-bit timer KB2 compare register 03 (TKBCR03), TKBO01-0, TKBO01-1, TKBO01-2 output becomes inactive level.

<5> When TKBCNT0 is counted up and its value matches the value specified in 16-bit timer KB2 compare register 00 (TKBCR00), INTTMKB2 output is generated at the next count clock and TKBO00 output becomes active level. TKBCNT0 starts its upward counting from 0000H.

<6> Repeats <2> through <5>.

(3) Operation of batch overwrite (at starting counting operation)

The compare register of 16-bit timer KB20 has a function which updates the internal buffer registers simultaneously at the starting of counter operation caused by the count clock which is generated after writing 1 to the TKBCE0 bit in the TKBCTL01 register.

Batch overwrite is generated even 1 is not written to the TKBRDT0 bit in the TKBTRG0 register only in the case of counting operation start timing (see Figure 7-42).

Figure 7-42. Batch Overwrite Function: Buffer Updating Timing at Counting Operation Start

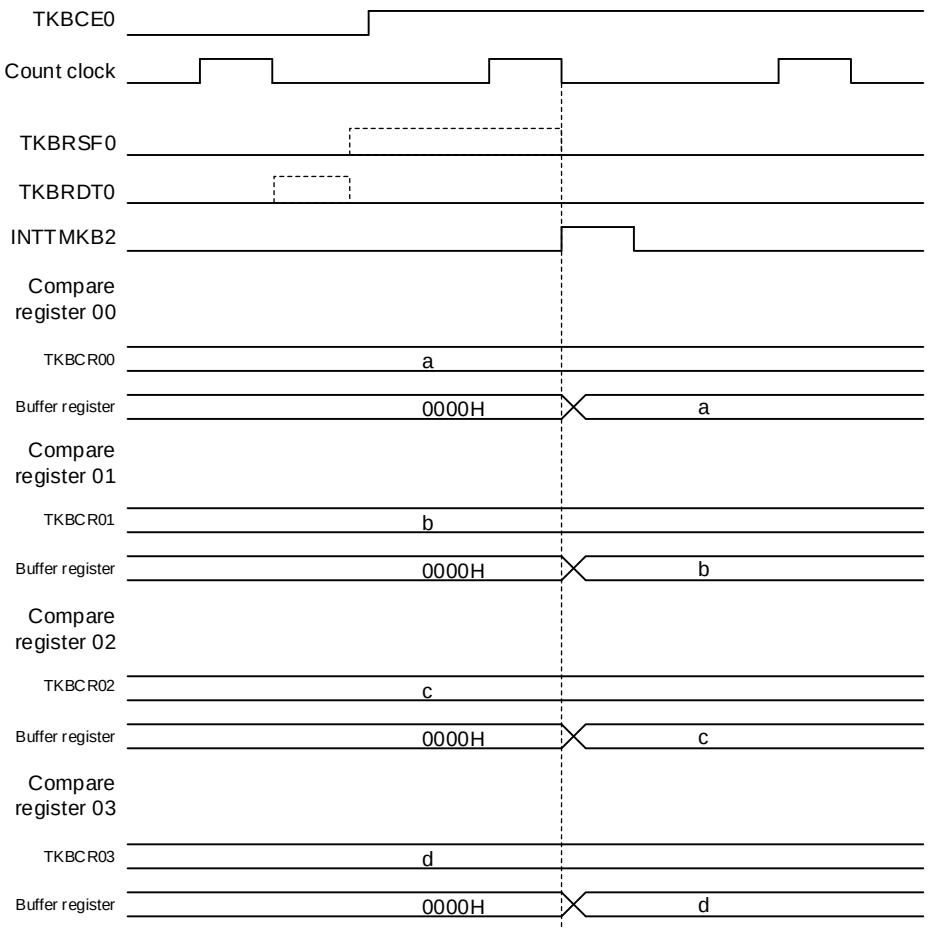

Remark TKBRSF0 is set to 1 by writing 1 to TKBRDT0 when TKBCE0 is 0. TKBRSF0 is cleared to 0 when counting starts (counter start trigger generated).

(4) Batch overwrite operation (buffer updating during counting operation)

The compare register of 16-bit timer KB20 has a function which updates the internal buffer register simultaneously at the next counter clear (TKBCNT0 and TKBCR00 matched), identifying writing 1 to the TKBRDT0 bit as batch overwriting trigger. The batch overwrite trigger pending status flag (TKBRSF0) is set during the period from writing 1 to the TKBRDT0 bit until completion of batch overwrite (see Figure 7-43).

<1> Compare register setting is transferred to the buffer register at the timing when the TKBCE0 bit is set from 0 to 1 and TKBCNT0 starts counting operation.

<2> After the TKBCR00 to TKBCR03 registers are overwritten, even when counter clear is generated, batch overwrite is not generated if 1 is not written to the TKBRDT0 bit.

<3> The batch overwrite trigger pending status flag (TKBRSF0 bit) is set to 1 by writing 1 to the TKBRDT0 bit.

<4> Compare register setting is transferred to the buffer register by the counter clear generated when the TKBRSF0 bit is 1. The TKBRSF0 bit is set to 0 simultaneously.

Figure 7-43. Batch Overwrite Function: Timing of Buffer Updating during Counting Operation

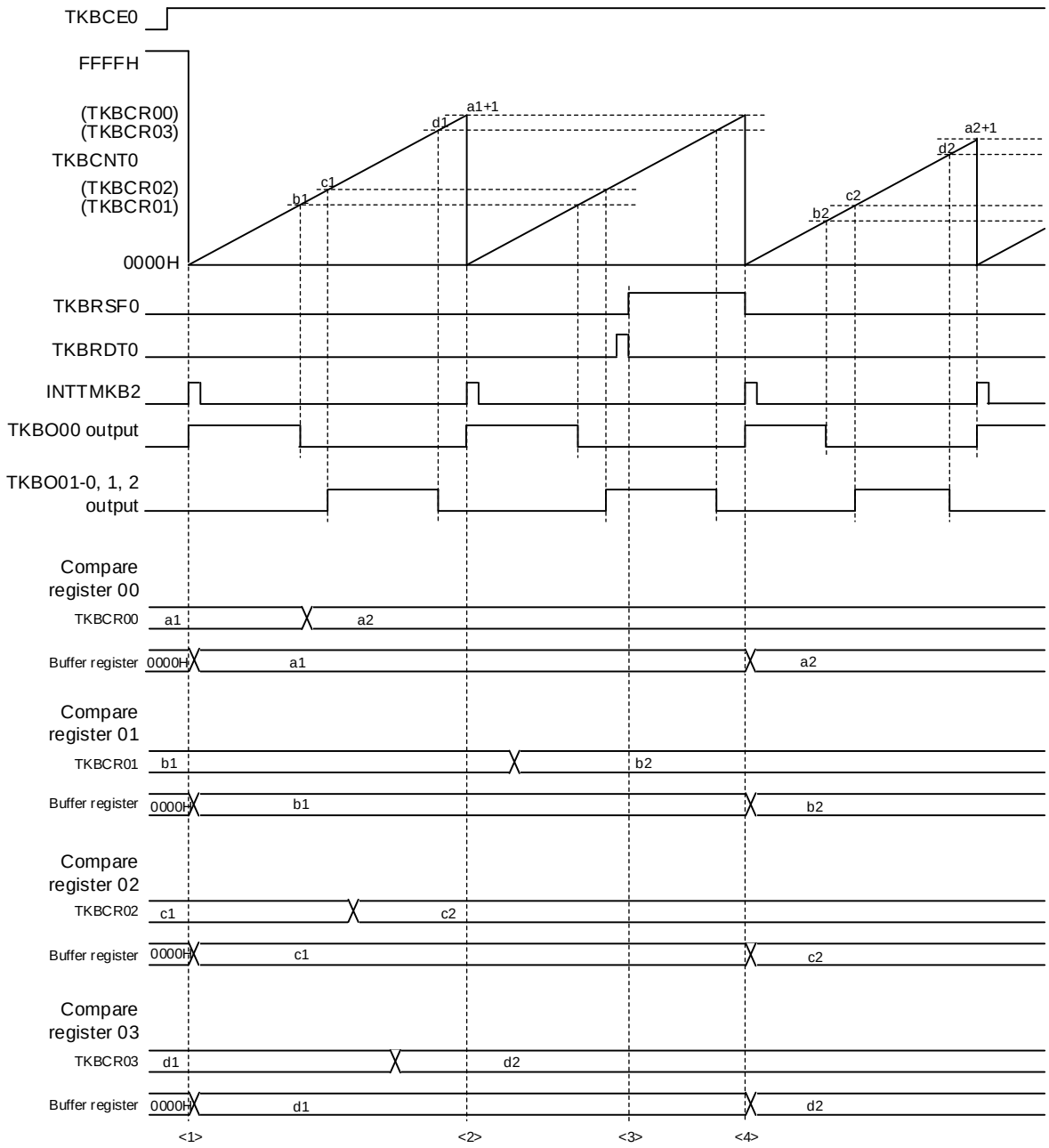

(5) Sample of register setting details at standalone mode (period controlled by TKBCR00)

	15	14	13	12	11	10	9	8
TKBCTL00	TKBIHE0 1/0	– 0	TKBSSE01 1/0	TKBDIE01 1/0	– 0	– 0	TKBSSE00 1/0	TKBDIE00 1/0
	7	6	5	4	3	2	1	0
	TKBMFE0 0	– 0	TKBIRS01 0	TKBIRS00 0	– 0	TKBTSE0 0	TKBSTS01 0	TKBSTS00 0

	7	6	5	4	3	2	1	0
TKBCTL01	TKBCE0 1	– 0	– 0	TKBCKS0 1/0	– 0	– 0	TKBMD01 0	TKBMD00 0

	7	6	5	4	3	2	1	0
TKBIOC00	– 0	– 0	– 0	– 0	TKBTOL01 1/0	TKBTOL00 1/0	TKBTOD01 1/0	TKBTOD00 1/0

	7	6	5	4	3	2	1	0
TKBIOC01	TKBNFB0 0	– 0	TKBEGPA0 1/0	TKBEGNA0 1/0	TKBEGPB0 1/0	TKBEGNB0 1/0	TKBTOE01 1/0	TKBTOE00 1/0

	7	6	5	4	3	2	1	0
TKBPSCS0	– 0	TKBTPS012 1/0	TKBTPS011 1/0	TKBTPS010 1/0	– 0	TKBTPS002 1/0	TKBTPS001 1/0	TKBTPS000 1/0

TKBCR00	0000H to FFFFH
TKBCR01	0000H to FFFFH
TKBCR02	0000H to FFFFH
TKBCR03	0000H to FFFFH
TKBSIR00	0000H to FFFFH
TKBSIR01	0000H to FFFFH
TKBSSR00	00H to 0FH
TKBSSR01	00H to 0FH
TKBDNR00	00H to F0H
TKBDNR01	00H to F0H
TKBMFR0	0000H

□ : Setting is fixed for this mode ■ : Setting is not needed (default setting)

7.4.6 Standalone mode (period controlled by external trigger input)

(1) Outline of functions

In standalone mode, the period can be controlled not only by TKBCR00 but also by external trigger input.

The input signals selected by 16-bit timer KB2 counter restart trigger select registers 00 to 09 (ELSELR00 to ELSELR09) and the TKBSTS01 and TKBSTS00 bits in 16-bit timer KB2 operation control register 00 (TKBCTL00) are used to detect external trigger input.

When the external trigger input is detected, counter TKBCNT0 is cleared to 0000H and TKBO00/TKBO01-0, TKBO01-1, TKBO01-2 output is respectively set to active level and inactive level. When the setting values of TKBCR00 and the counter (TKBCNT0) match before detection of external trigger input, the counter is cleared to 0000H and operation is continued.

For the formula to calculate TKBO00/TKBO01-0, TKBO01-1, TKBO01-2 output when external trigger input is not yet detected and the period is controlled by TKBCR00, see **7.4.5 Standalone mode (period controlled by TKBCR00)**.

The calculation formula for TKBO00/TKBO01-0, TKBO01-1, TKBO01-2 output when the period is controlled by external trigger input detection is as follows:

[Calculation Formula for TKBO00 Output]

Pulse period = (Counter value at external trigger input detection + 1) × Count clock period

Duty [%] = (Setting value of TKBCR01 / (Counter value at external trigger input detection + 1)) × 100

0% output: TKBCR01 setting = 0000H

100% output: TKBCR01 setting ≥ Counter value at external trigger input detection + 1

[Calculation Formula for TKBO01-0, TKBO01-1, TKBO01-2 Output]

Pulse period = (Counter value at external trigger input detection + 1) × Count clock period

Duty [%] = ((Setting value of TKBCR03 – Setting value of TKBCR02) / (Counter value at external trigger input detection + 1)) × 100

0% output: TKBCR03 setting = TKBCR02 setting

100% output: TKBCR02 setting = 0000H

TKBCR03 setting ≥ Counter value at external trigger input detection + 1

Caution It should always be: TKBCR02 setting ≤ KBCR03 setting.

Figure 7-44 shows the configuration of standalone mode (period controlled by external trigger input).

Figure 7-44. Configuration of Standalone Mode (Period Controlled by External Trigger Input)

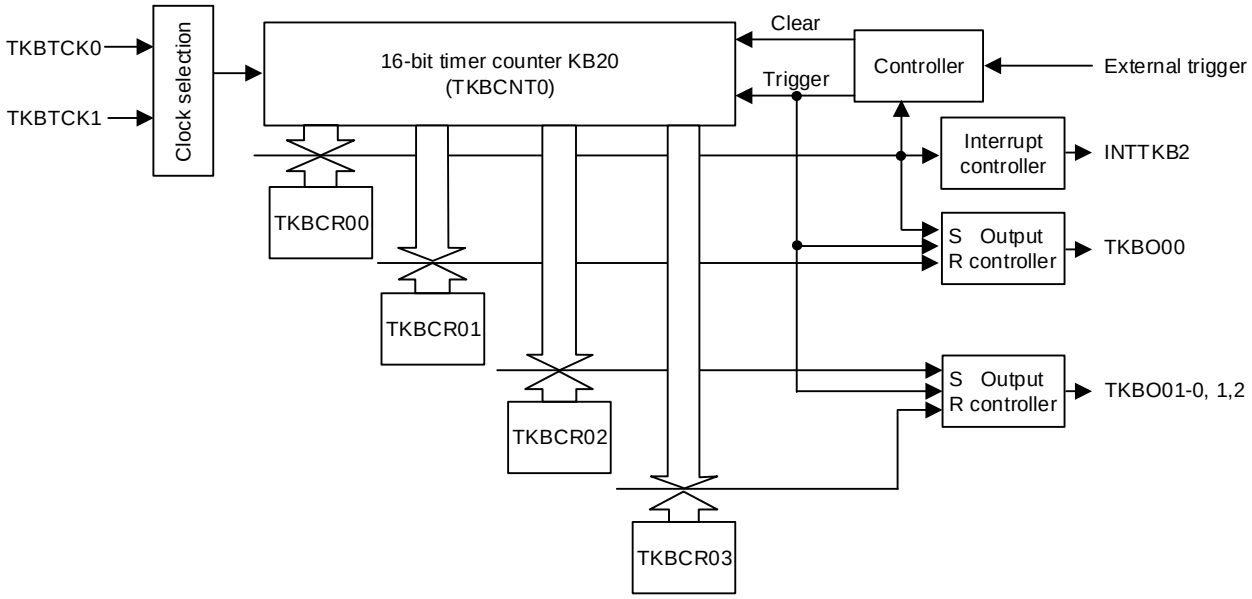

Remark Output from TKBO01-0, TKBO01-1, and TKBO01-2 is switched by the 16-bit timer KB2 switch register (PWCTKB).

(2) Batch overwrite function (in standalone operation during period controlled by external trigger input, buffer updating during counting operation (TKBTSE0 bit set to 1))

In standalone operation during the period controlled by external trigger input, counter clear and compare register batch overwrite are implemented at the timing when external trigger input is detected after writing 1 to the TKBRDT0 bit and by setting the TKBTSE0 bit in TKBCTL00 register to 1. Same as in counter clear, batch overwrite is also implemented when TKBCR00 and counter (TKBCNT0) match before detection of external trigger input after writing 1 to the TKBRDT0 bit. The source of external trigger input is selected by the ELSELR00 to ELSELR09 registers and the TKBSTS01 and TKBSTS00 bits in the TKBCTL00 register.

Figure 7-45 shows an example of the timing of batch overwrite operation when TKBTSE0 bit is set to 1.

<1> Compare register setting is transferred to the buffer register at the timing when TKBCE0 bit is set from 0 to 1 and TKBCNT0 starts counting operation.

<2> After the TKBCR00 to TKBCR03 registers are overwritten, even when counter clear is generated, batch overwrite is not generated if 1 is not written to the TKBRDT0 bit.

<3> The batch overwrite trigger pending status flag (TKBRSF0 bit) is set to 1 by writing 1 to the TKBRDT0 bit.

<4> When counter clear is generated by external trigger input while TKBTSE0 bit is set to 1 and TKBRSF0 bit is 1, the setting value of the compare register is transferred to the buffer register. At the same time, the TKBRSF0 bit becomes 0. Same as in counter clear, batch overwrite is also implemented when TKBCR00 and counter (TKBCNT0) match before detection of external trigger input after writing 1 to the TKBRDT0 bit.

<5> Even if the counter clear event is generated by external trigger input, batch overwrite does not occur unless 1 is written to the TKBRDT0 bit.

Figure 7-45. Batch Overwrite Function: Standalone Operation during Period Controlled by External Trigger Input and Timing of Buffer Updating during Counting Operation (TKBTSE0 bit set to 1)

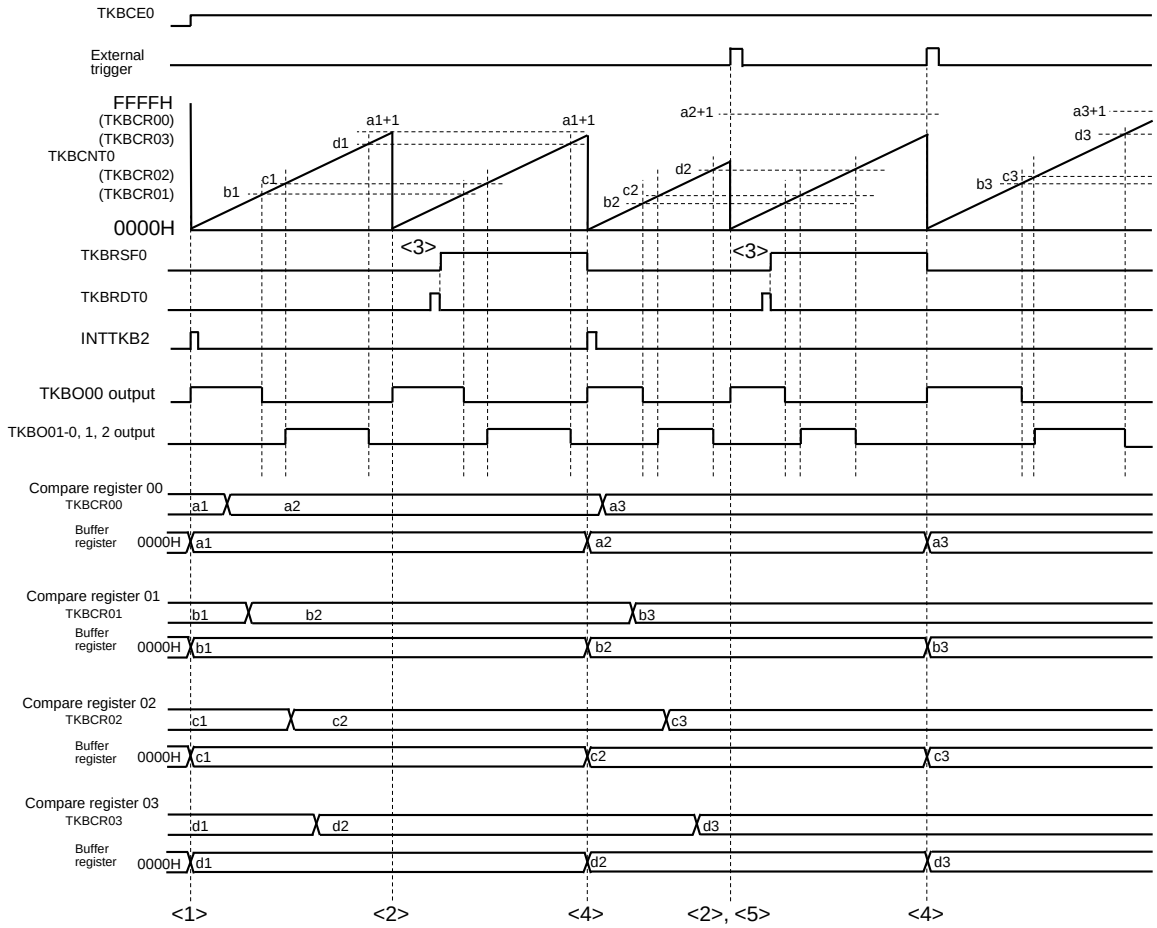

(3) Batch overwrite function (standalone operation during period controlled by external trigger input, buffer updating during counting operation (TKBTSE0 bit clear to 0))

This is an example when the TKBTSE0 bit in the TKBCTL00 register is set to 0 in standalone operation during the period controlled by external trigger input. In this case, the counter is cleared when 1 is written to the TKBRDT0 bit and the external trigger input is detected while the batch overwrite trigger pending status flag (TKBRSF0 bit) is 1. However, batch overwrite of the compare register is not implemented.

The source of external trigger input is selected by the ELSELR00 to ELSELR09 registers and the TKBSTS01 and TKBSTS00 bits in the TKBCTL00 register. Figure 7-46 shows an example of the batch overwrite operation timing when the TKBTSE0 bit is set to 0.

<1> Compare register setting is transferred to the buffer register at the timing when the TKBCE0 bit is set from 0 to 1 and TKBCNT0 starts counting operation.

<2> After the TKBCR00 to TKBCR03 registers are overwritten, the batch overwrite trigger pending status flag (TKBRSF0 bit) is set to 1 by writing 1 to the TKBRDT0 bit.

<3> Even if the counter clear event is generated by external trigger input, batch overwrite does not occur unless the TKBTSE0 bit is set to 1.

<4> When the counter clear event (TKBCNT0 and TKBCR00 match) is generated while TKBRSF0 bit is 1, the setting value of the compare register is transferred to the buffer register. At the same time, the TKBRSF0 bit becomes 0.

<5> Even if the counter clear event is generated by external trigger input, batch overwrite does not occur unless the TKBTSE0 and TKBRSF0 bits are both 1.

Figure 7-46. Batch Overwrite Function: Standalone Operation during Period Controlled by External Trigger Input and Timing of Buffer Updating during Counting Operation (TKBTSE0 bit cleared to 0)

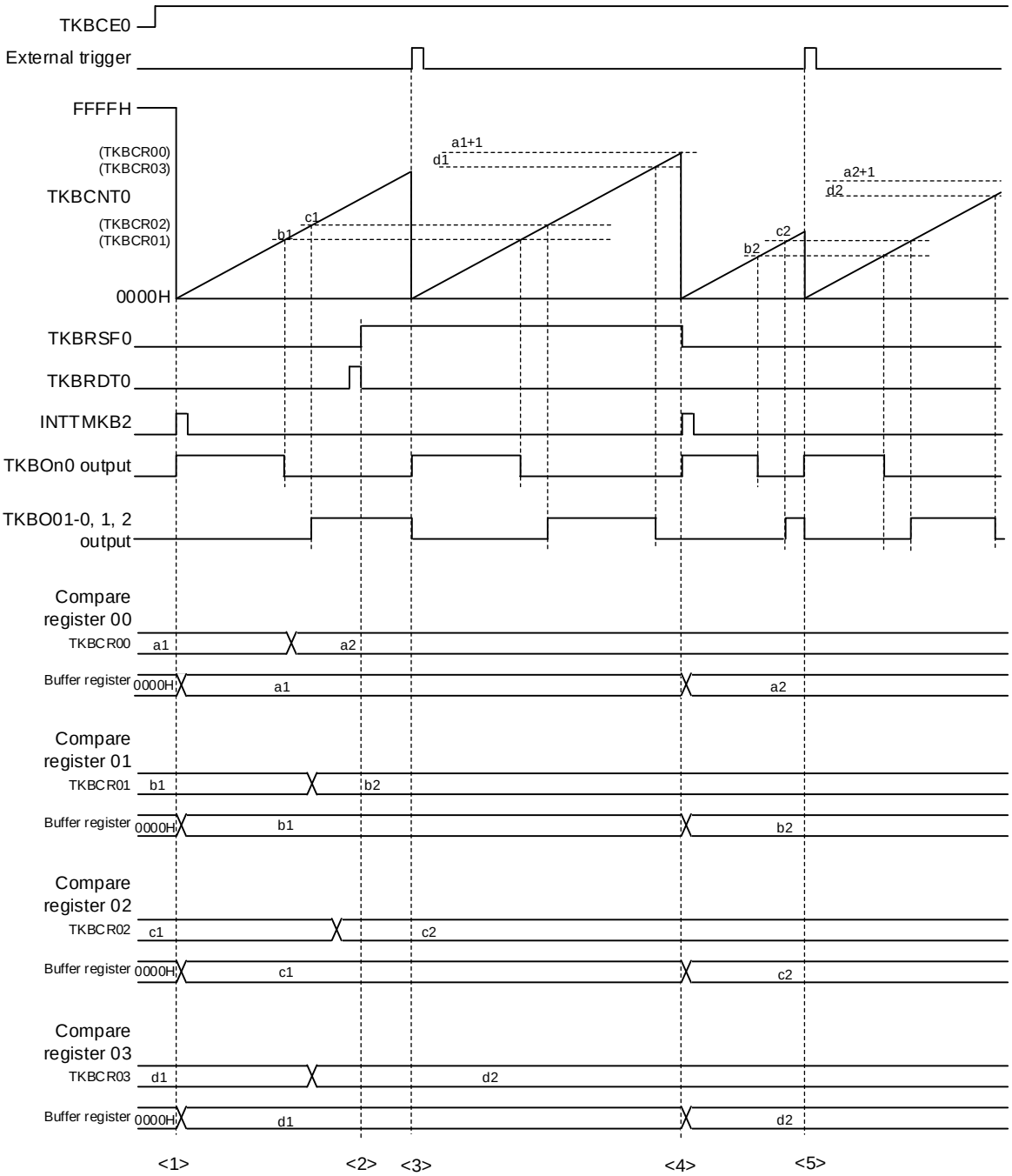

(4) Sample of register setting details at standalone mode (period controlled by external trigger input)

	15	14	13	12	11	10	9	8
TKBCTL00	TKBIHE0 0	– 0	TKBSSE01 0	TKBDIE01 0	– 0	– 0	TKBSSE00 0	TKBDIE00 0
	7	6	5	4	3	2	1	0
	TKBMFE0 1/0	– 0	TKBIRS01 0	TKBIRS00 0	– 0	TKBTSE0 1/0	TKBSTS01 1/0	TKBSTS00 1/0

	7	6	5	4	3	2	1	0
TKBCTL01	TKBCE0 1	– 0	– 0	TKBCKS0 1/0	– 0	– 0	TKBMD01 0	TKBMD00 0

	7	6	5	4	3	2	1	0
TKBIOC00	– 0	– 0	– 0	– 0	TKBTOL01 1/0	TKBTOL00 1/0	TKBTOD01 1/0	TKBTOD00 1/0

	7	6	5	4	3	2	1	0
TKBIOC01	TKBNFB0 0	– 0	TKBEGPA0 0	TKBEGNA0 0	TKBEGPB0 0	TKBEGNB0 0	TKBTOE01 1/0	TKBTOE00 1/0

	7	6	5	4	3	2	1	0
TKBPSCS0	– 0	TKBTPS012 1/0	TKBTPS011 1/0	TKBTPS010 1/0	– 0	TKBTPS002 1/0	TKBTPS001 1/0	TKBTPS000 1/0

TKBCR00	0000H to FFFFH
TKBCR01	0000H to FFFFH
TKBCR02	0000H to FFFFH
TKBCR03	0000H to FFFFH
TKBSIR00	0000H
TKBSIR01	0000H
TKBSSR00	00H
TKBSSR01	00H
TKBDNR00	00H
TKBDNR01	00H
TKBMFR0	0000H to FFFFH

□: Setting is fixed for this mode ■: Setting is not needed (default setting)

7.4.7 Interleave PFC (Power Factor Correction) output mode

This is the mode that can generate a signal as interleave output that controls PFC circuit which regulates the harmonic current of the power source.

As interleaved PFC circuit can regulate peak input current at greater extent than single PFC circuit, it can make parts smaller and implement high powered power source units.

Interleaved PFC control requires two inputs for zero current detection and two PWM outputs for switching.

Interleaved PFC output mode is implemented by a combination of external interrupt input selected for counter restart trigger source 0 and TKBO00, and external interrupt input selected for counter restart trigger source 1 and TKBO01-0, TKBO01-1, TKBO01-2.

The TKBO01-0, TKBO01-1, and TKBO01-2 phases shifted by 180 degrees by external interrupt input selected for counter restart trigger source 1 are output based on the TKBO00 output controlled by external interrupt input selected for counter restart trigger source 0.

Remark Single PFC control can be implemented in standalone mode (period controlled by external input trigger). For more details, see **7.4.6 Standalone mode (period controlled by external trigger input)**.

The counter restart period is set by TKBCR00 if external interrupt input selected for counter restart trigger source 0 is not detected.

The active width of TKBO00 output is set by TKBCR01.

The active width of TKBO01-0, TKBO01-1, TKBO01-2 output is set by TKBCR03.

Remark Interleave PFC (Power Factor Correction) output mode does not use TKBCR02.

The setting value of the TKBTOL00 and the TKBTOD00 bit, and the TKBTOL01 bit and the TKBTOD01 bit must be the same value. This makes that when the default level is low (high) level, the active level becomes high (low) level.

[Calculation Formula for TKBO00 Output and TKBO01-0, TKBO01-1, TKBO01-2 Output]

Pulse period (MAX)[Note] = (TKBCR00 setting + 1) × Count clock period

Active width of TKBO00 output = TKBCR01 setting × Count clock period

Active width of TKBO01-0, TKBO01-1, TKBO01-2 output = TKBCR03 setting × Count clock period

Note This is the counter restart period in case when external interrupt input selected for counter restart trigger source 0 not being detected.

Figure 7-47 shows the overview of basic operation of interleave PFC mode. In basic operation of interleave PFC mode, TKBCNT0 is incremented from 0000H by external interrupt input selected for counter restart trigger source 0 as a trigger. In this case, TKBO00 becomes active level, and then becomes inactive level when it matches the setting value of the TKBCR01 register.

TKBO01-0, TKBO01-1, TKBO01-2 becomes active level by being triggered by external interrupt input selected for counter restart trigger source 0, and becomes inactive level when it matches the setting value of TKBCR03 register.

Another external interrupt input selected for counter restart trigger source 0 comes in before TKBCNT0 matches the setting value of the TKBCR00 register, and then the above operation is repeated.

Figure 7-47. Overview of Basic Operation of Interleave PFC Mode
(When default value of output is low level (TKBTOD0p = 0) and active level is high level (TKBTOL0p = 0))

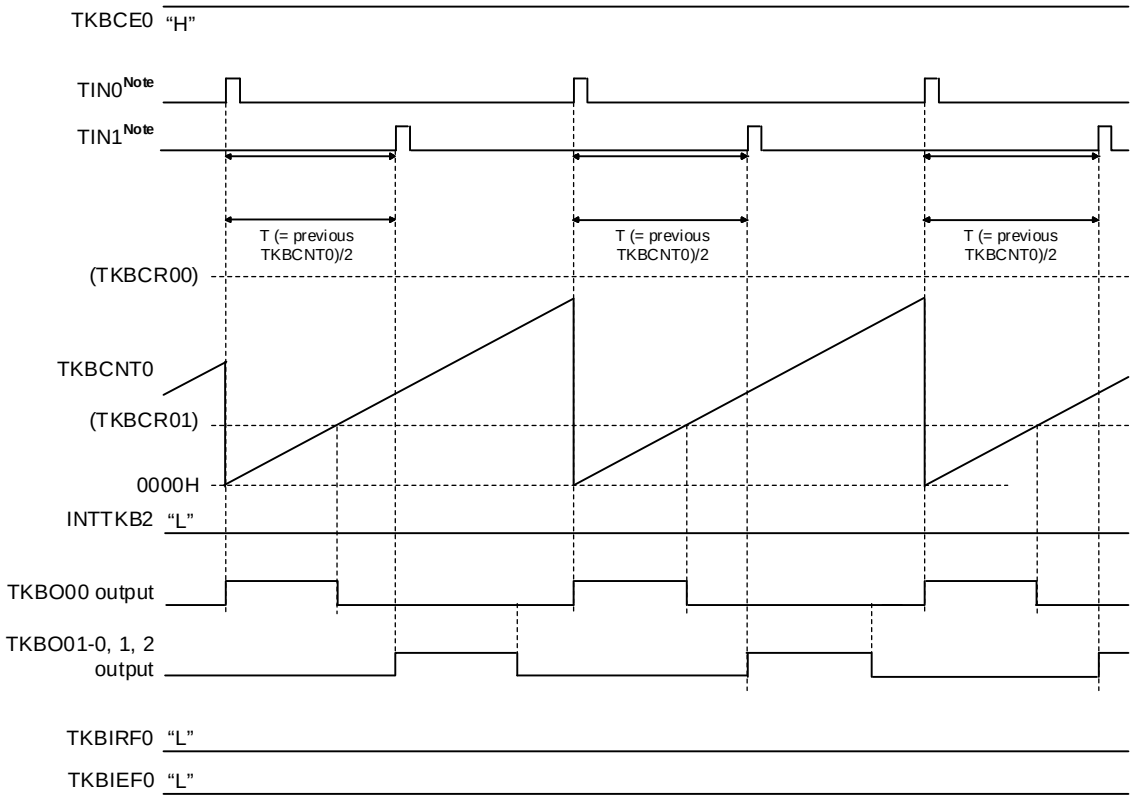

Note TIN0 indicates an external interrupt assigned to counter restart trigger source 0. TIN1 indicates an external interrupt assigned to counter restart trigger source 1.

Remark p = 0, 1

(1) Output conditions of TKBO01-0, TKBO01-1, TKBO01-2 at interleave PFC

There are output conditions for TKBO01-0, TKBO01-1, TKBO01-2 output which are controlled according to the table below.

Status No.	Output Conditions for TKBO01-0, TKBO01-1, TKBO01-2 Output			TKBO01-0, TKBO01-1, TKBO01-2 Start at High Level
	TIN0[Note 1] Input	Matching with CR00/TIN1[Note 1]	Period Width	
1	First period	–	–	Output start by T/2 (CR00 setting is T)
2	TIN0 input not detected	Matching of TKBCNT0 and CR00 (Ignore TIN1 input detection)	Subsequent period (CR00 value) is over 1/2 the previous period	Output start by T/2
3	↑	↑	Subsequent period (CR00 value) is below 1/2 the previous period	Maintain the status
4	Subsequent period of No.3	–	–	Output start by T/2
5	TIN0 input detected (for the first time)[Note 2]	–	–	Output start by T/2
6	TIN0 input detected (from the second time)[Note 3]	TIN1 detected (within the range from previous TOUT1 falling edge to T/2)	–	Output start by T/2
7	TIN0 input detected (from the second time)[Note 3]	TIN1 detected (T/2 to T/2 + T/(TKBIRS01 and TKBIRS00 setting) range)	–	Output start by trigger input
8	TIN0 input detected (from the second time)[Note 3]	TIN1 detected (after the range T/2 + T/(IRS1 and IRS0 setting)	–	Maintain the status
9	Subsequent period of No.8	–	–	Output start by T/2
10	TIN0 input detected	–	Subsequent period is below T/2	Maintain the status
11	Subsequent period of No.10	–	–	Output start by T/2

Notes 1. TIN0 indicates an external interrupt assigned to counter restart trigger source 0. TIN1 indicates an external interrupt assigned to counter restart trigger source 1.

2. TIN0 input detected (for the first time) means that the previous period was not cleared for TIN0 input being detected.

3. TIN0 input detected (from the second time) means that the previous period being cleared for TIN0 input being detected.

See the following figures of the waveform corresponding to each “Condition No.”

Figure 7-48. Timing of Interleave PFC Mode (Operation for Status No. 1 and No. 2)

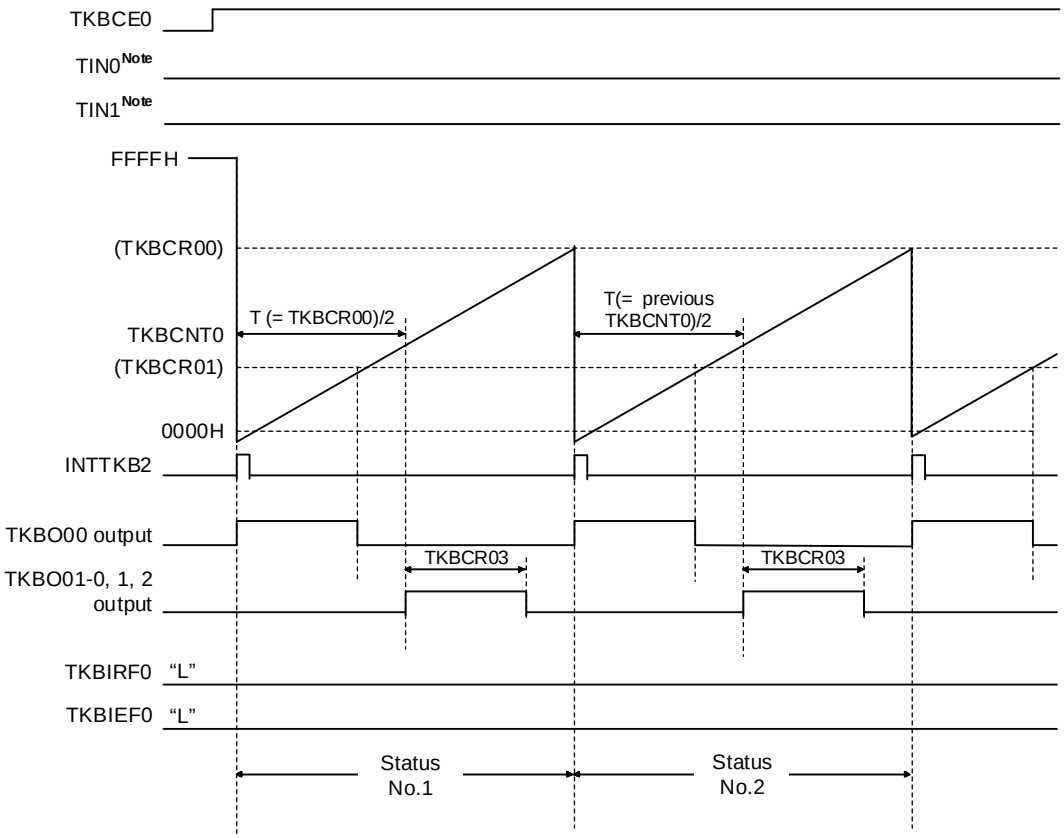

Note TIN0 indicates an external interrupt assigned to counter restart trigger source 0. TIN1 indicates an external interrupt assigned to counter restart trigger source 1.

Status No.1: Only for the first period after TKBCE0 = 1 setting, TKBO01-0, TKBO01-1, TKBO01-2 with setting width of TKBCR03 is output setting "T" as TKBCR00.

Status No.2: In the second period, TKBO01-0, TKBO01-1, TKBO01-2 with setting width of TKBCR03 is output at T/2 of the previous period.

Figure 7-49. Timing of Interleave PFC Mode (Operation from Status No. 3 and No. 4)
(When default value of output is low level (TKBTOD0p = 0) and active level is high level (TKBTOL0p = 0)

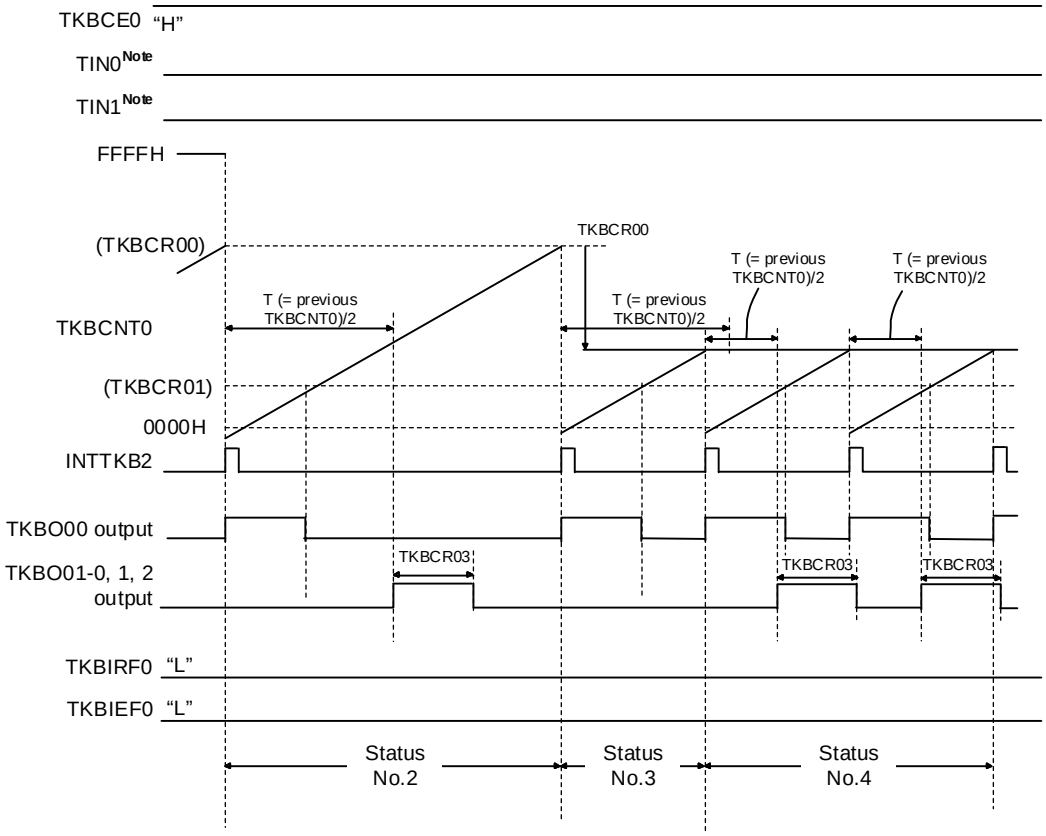

Note TIN0 indicates an external interrupt assigned to counter restart trigger source 0. TIN1 indicates an external interrupt assigned to counter restart trigger source 1.

Remark p = 0, 1

Status No.3: TKBO01-0, TKBO01-1, TKBO01-2 maintains the status and T/2 of the previous period is not ensured.
Status No.4: TKBO01-0, TKBO01-1, TKBO01-2 with setting width of TKBCR03 is output at T/2 of the previous period.

Figure 7-50. Timing of Interleave PFC Mode
(Operation for Status No. 5: INT0 Input Detected (for the first time))

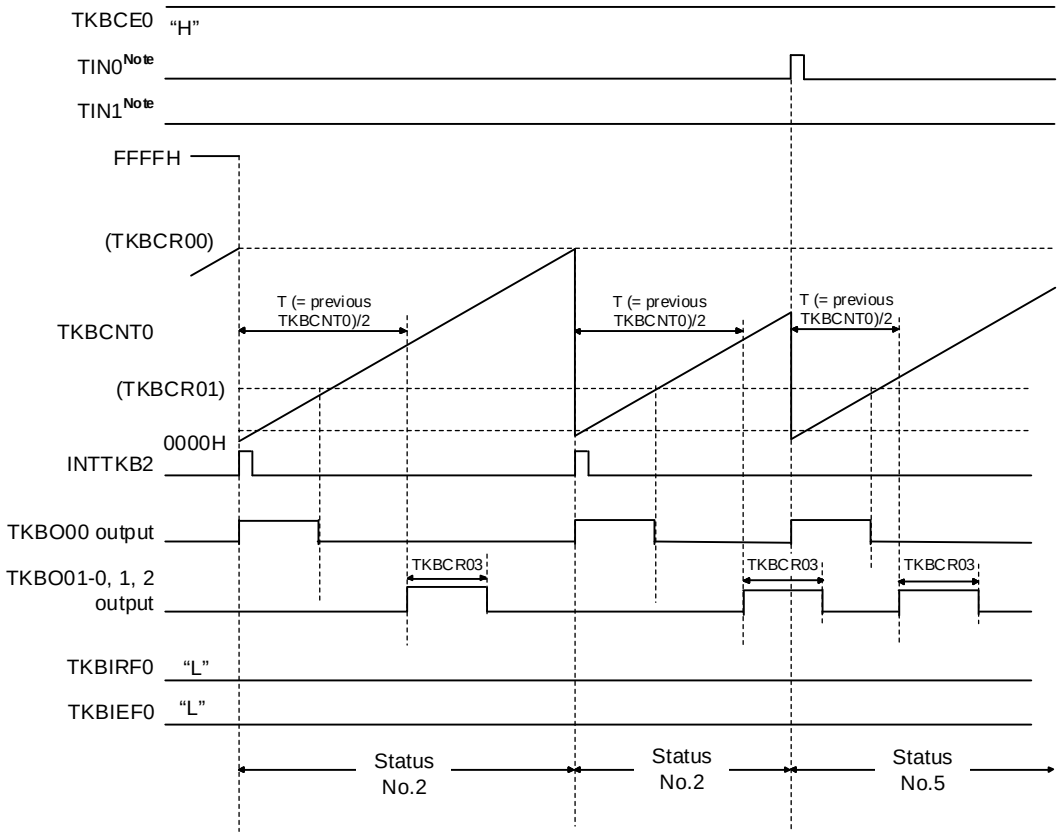

Note TIN0 indicates an external interrupt assigned to counter restart trigger source 0. TIN1 indicates an external interrupt assigned to counter restart trigger source 1.

Status No.5: TIN0 which was first detected after setting TKBCE0 = 1 outputs TKBO01-0, TKBO01-1, TKBO01-2 with setting width of TKBCR03 at T/2 of the previous period. It does not depend on whether TIN1 is detected or not detected.

Figure 7-51. Timing of Interleave PFC Mode (Operation for Status No. 6)
(When default value of output is low level (TKBTOD0p = 0) and active level is high level (TKBTOL0p = 0)

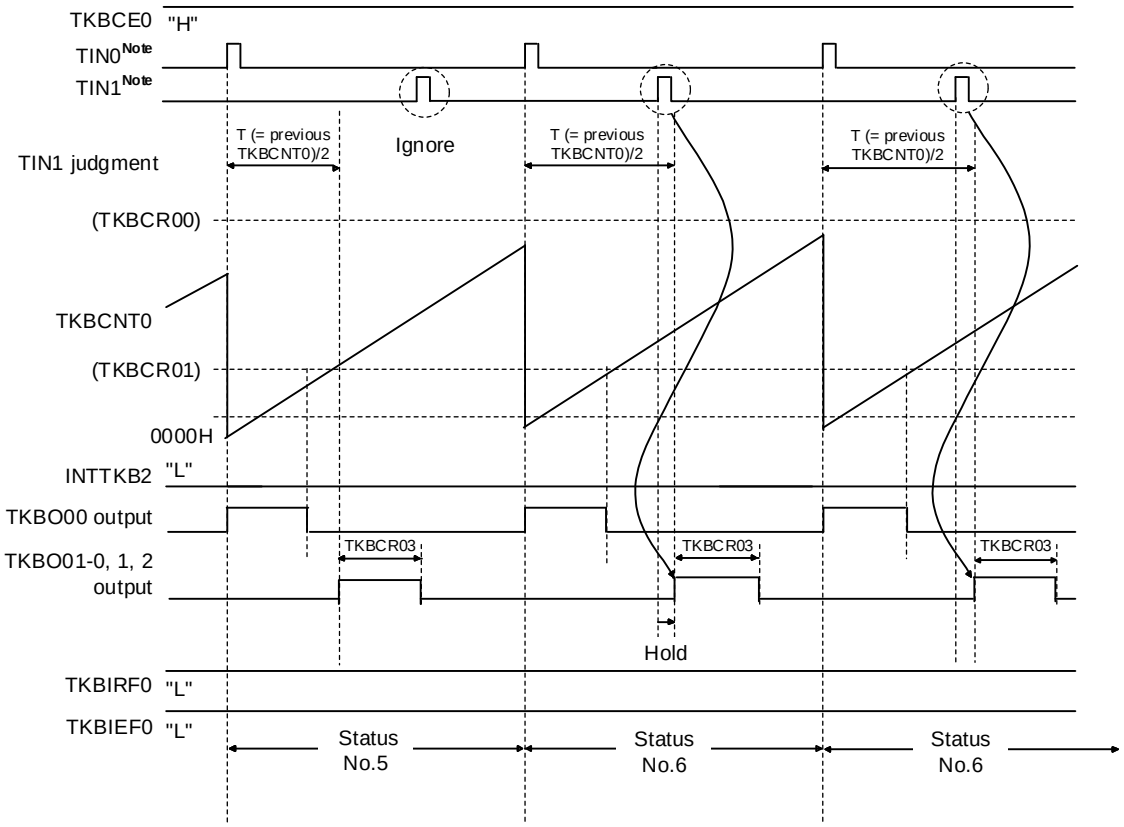

Note TIN0 indicates an external interrupt assigned to counter restart trigger source 0. TIN1 indicates an external interrupt assigned to counter restart trigger source 1.

Remark p = 0, 1

Status No.6: TKBO01-0, TKBO01-1, TKBO01-2 with setting width of TKBCR03 is output at T/2 of the previous period as TIN1 input is below T/2 of the previous period.

Figure 7-52. Timing of Interleave PFC Output Mode (Operation for Status No. 7)
(When default value of output is low level (TKBTOD0p = 0) and active level is high level (TKBTOL0p = 0)

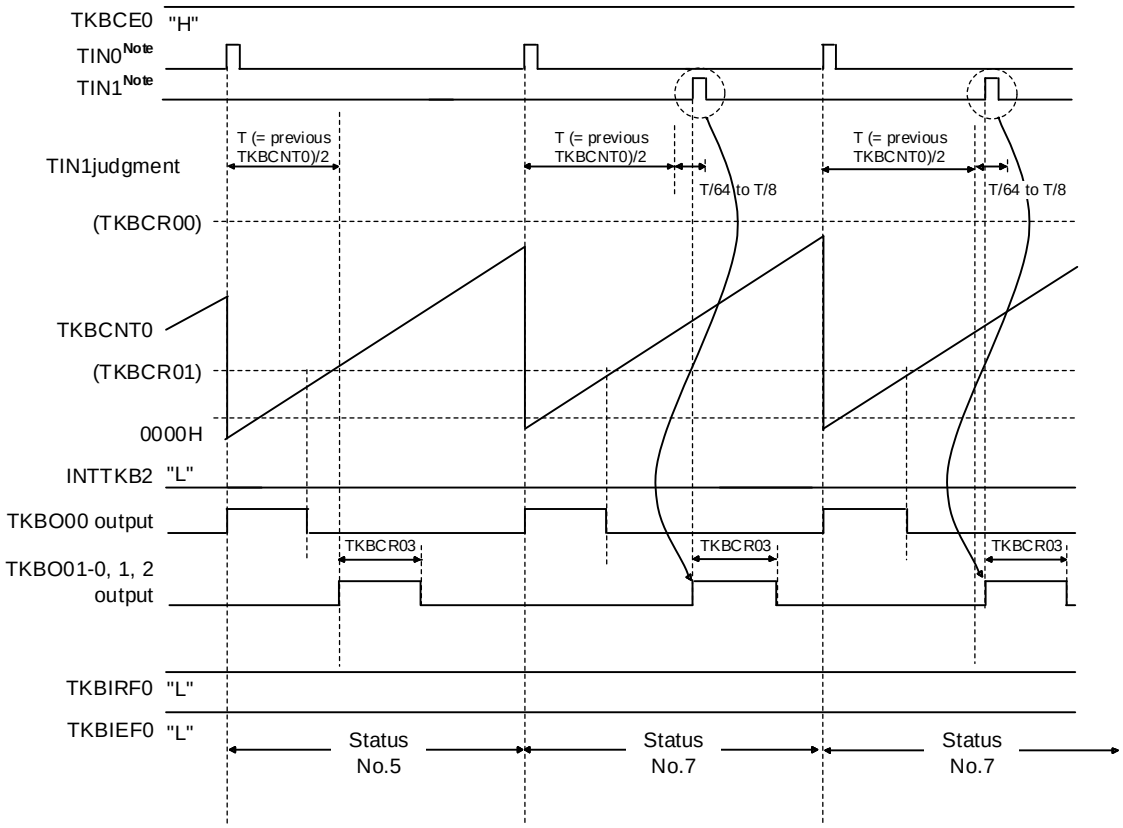

Note TIN0 indicates an external interrupt assigned to counter restart trigger source 0. TIN1 indicates an external interrupt assigned to counter restart trigger source 1.

Remark p = 0, 1

Status No.7: After the detection of TIN0 when TIN1 is detected over T/2 of the previous period and within T/2 + T/n (n = 8, 16, 32, 64: set by TKBIRS01 and TKBIRS00), TKBO01-0, TKBO01-1, TKBO01-2 with setting width of TKBCR03 is output at the detection of TIN1.

Figure 7-53. Timing of Interleave PFC Output Mode (Operation for Status No. 8 and No. 9)
(When default value of output is low level (TKBTOD0p = 0) and active level is high level (TKBTOL0p = 0)

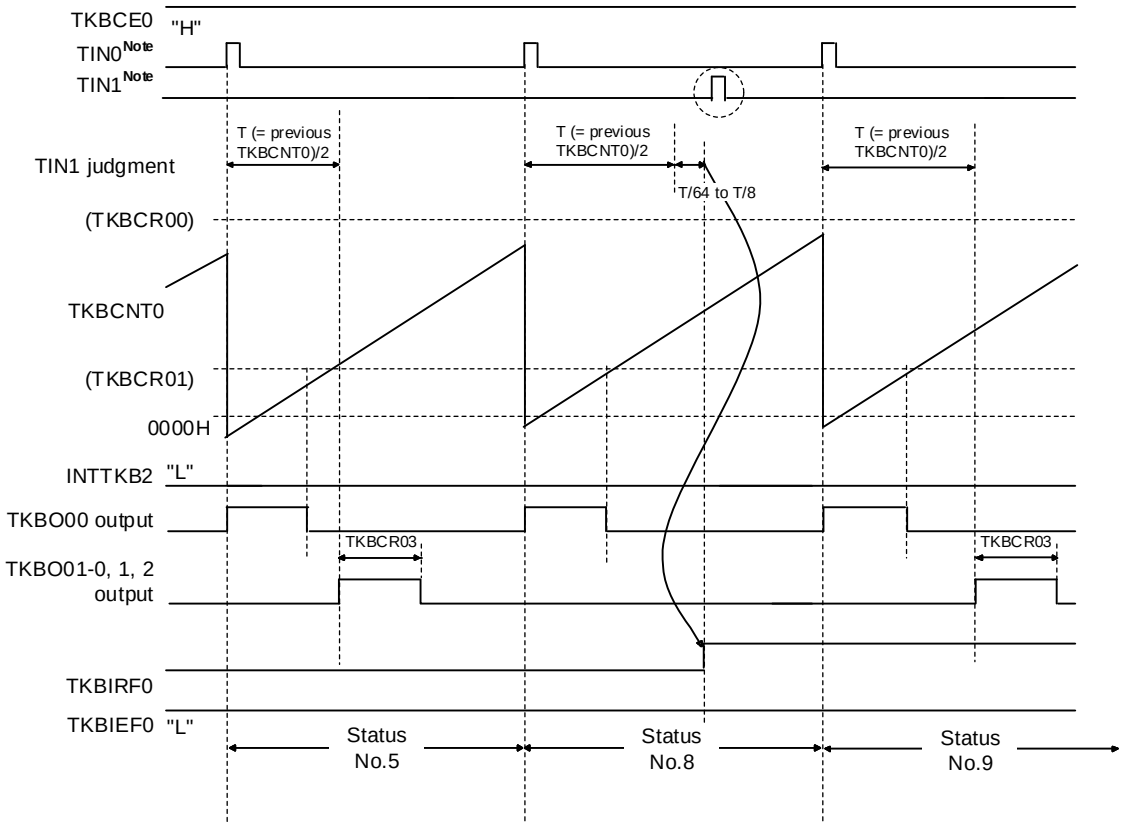

Note TIN0 indicates an external interrupt assigned to counter restart trigger source 0. TIN1 indicates an external interrupt assigned to counter restart trigger source 1.

Remark p = 0, 1

Status No.8: If TIN1 is not detected within T/2 + T/n (n = 8, 16, 32, 64: set by TKBIRS01 and TKBIRS00) of the previous period, TKBO01-0, TKBO01-1, TKBO01-2 maintains the status. TKBIRF0 is set to 1 at this time.

Status No.9: TKBO01-0, TKBO01-1, TKBO01-2 with setting width of TKBCR03 is output at T/2 of the previous period.

Figure 7-54. Timing of Interleave PFC Output Mode (Operation for Status No. 10 and No. 11)
(When default value of output is low level (TKBTOD0p = 0) and active level is high level (TKBTOL0p = 0)

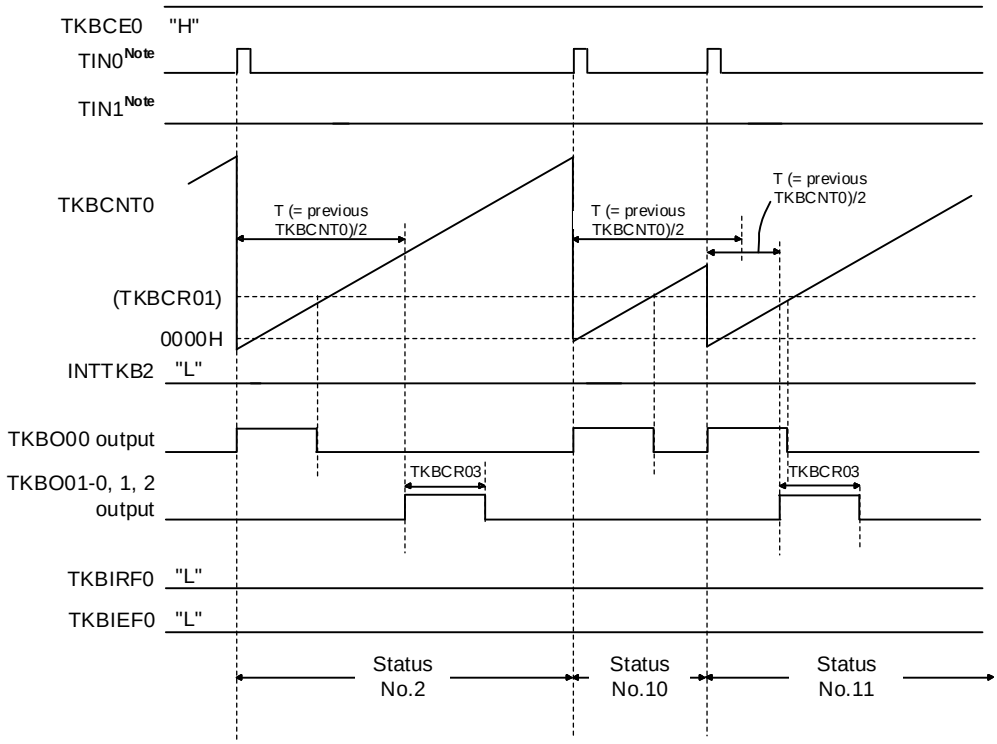

Note TIN0 indicates an external interrupt assigned to counter restart trigger source 0. TIN1 indicates an external interrupt assigned to counter restart trigger source 1.

Remark p = 0, 1

Status No.10: TKBO01-0, TKBO01-1, TKBO01-2 maintains the status and T/2 of the previous period is not ensured.
Status No.11: TKBO01-0, TKBO01-1, TKBO01-2 with setting width of TKBCR03 is output at T/2 of the previous period.

Figure 7-55. Timing of Interleave PFC Output Mode
(When trigger is generated again while TKBO01-0, TKBO01-1, and TKBO01-2 are output)

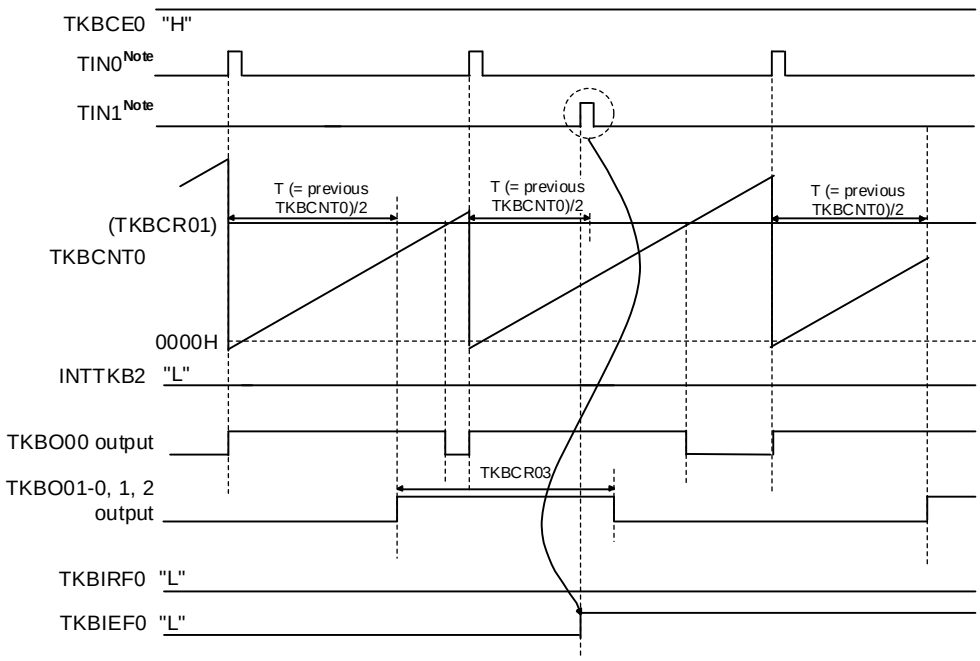

Note TIN0 indicates an external interrupt assigned to counter restart trigger source 0. TIN1 indicates an external interrupt assigned to counter restart trigger source 1.

The trigger is ignored when the subsequent TKBO01-0, TKBO01-1, TKBO01-2 output trigger is generated while outputting TKBO01-0, TKBO01-1, TKBO01-2 of the previous period. TKBIEF0 is set to 1 at this time.

Figure 7-56. Timing of Interleave PFC Output Mode
(TKBO01-0, TKBO01-1, TKBO01-2 output is at the width of the previous output width and exceeds status maintenance period)

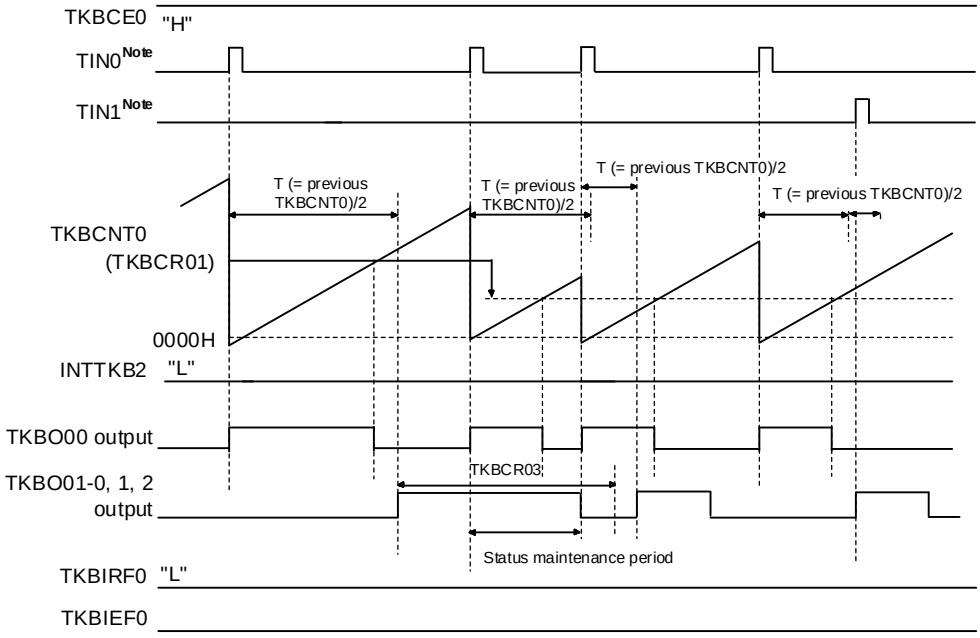

Note TIN0 indicates an external interrupt assigned to counter restart trigger source 0. TIN1 indicates an external interrupt assigned to counter restart trigger source 1.

When TKBO01-0, TKBO01-1, TKBO01-2 output of the previous output width is long which exceeds status maintenance period, it is default output compulsively at the starting timing of the subsequent period following the completion of the status maintenance period.

(2) List of register setting at interleave PFC output mode

	15	14	13	12	11	10	9	8
TKBCTL00	TKBIHE0 0	– 0	TKBSSE01 0	TKBDIE01 0	– 0	– 0	TKBSSE00 0	TKBDIE00 0
	7	6	5	4	3	2	1	0
	TKBMFE0 1/0	– 0	TKBIRS01 1/0	TKBIRS00 1/0	– 0	TKBTSE0 1	TKBSTS01 0	TKBSTS00 0

	7	6	5	4	3	2	1	0
TKBCTL01	TKBCE0 1	– 0	– 0	TKBCKS0 1/0	– 0	– 0	TKBMD01 1	TKBMD00 1

	7	6	5	4	3	2	1	0
TKBIOC00	– 0	– 0	– 0	– 0	TKBTOL01 1/0	TKBTOL00 1/0	TKBTOD01 1/0	TKBTOD00 1/0

	7	6	5	4	3	2	1	0
TKBIOC01	TKBNFB0 0	– 0	TKBEGPA0 0	TKBEGNA0 0	TKBEGPB0 0	TKBEGNB0 0	TKBTOE01 1/0	TKBTOE00 1/0

	7	6	5	4	3	2	1	0
TKBPSCS0	– 0	TKBTPS012 1/0	TKBTPS011 1/0	TKBTPS010 1/0	– 0	TKBTPS002 1/0	TKBTPS001 1/0	TKBTPS000 1/0

TKBCR00	0000H to FFFFH
TKBCR01	0000H to FFFFH
TKBCR02	0000H to FFFFH
TKBCR03	0000H to FFFFH
TKBSIR00	0000H
TKBSIR01	0000H
TKBSSR00	00H
TKBSSR01	00H
TKBDNR00	00H
TKBDNR01	00H
TKBMFR0	0000H to FFFFH

□: Setting is fixed for this mode ▒: Setting is not needed (default setting)

7.5 Option Functions of 16-bit Timer KB20

Option functions can be added to timer KB20.

The following table shows available options for each operation mode for timer KB20.

Operation Mode		Standalone Mode		Interleave PFC Output Mode
Period Controlling Method for Operation Mode		Period Controlled by CR00	Period Controlled by Trigger	Period Controlled by Restart Trigger Source 0/CR00
Optional Functions	PWM output dithering function	√ Note 1	–	–
	PWM output smooth start function	√ Note 1	–	–
	Maximum frequency limit function	–	√ Note 2	√
	PWM output function for IH control	√	√	–

Notes 1. Do not use when using the PWM output function for IH control.

2. Restart trigger input of PWM output function for IH control is not supported for detecting maximum frequency limit function.

Remark For details of the operation specifications, see **7.4.2 Default level and active level** and **7.4.3 Stop/restart operation**.

7.5.1 PWM output dithering function

16-bit timer KB20 is available for high resolution PWM using PWM output dithering function.

Taking 16 periods of the PWM period as one unit, 16 times higher PWM is available for average resolution by extending the active period of N times (N = 0 to 15) by one count clock during one unit.

The number of repetitions (N) extending the active period by one count clock during one unit is set to the TKBDNR0p register. The following figure shows the ordinal of the period (kth period) extending the active period (N times) by one count clock during one unit.

For example, when N = 3, the PWM active period is extended by one clock at the first, fifth, and ninth periods during one unit.

Figure 7-57. 16-bit Timer KB2 Dithering Count Register 0p (TKBDNR0p) Setting

kth period / Repetitions (N)	k															
	1	2	3	4	5	6	7	8	9	10	11	12	13	14	15	16
0																
1	■															
2	■								■							
3	■				■				■							
4	■				■				■				■			
5	■		■		■				■				■			
6	■		■		■				■		■		■			
7	■		■		■		■		■		■		■			
8	■		■		■		■		■		■		■		■	
9	■	■	■		■		■		■		■		■		■	
10	■	■	■		■		■		■	■	■		■		■	
11	■	■	■		■	■	■		■	■	■		■		■	
12	■	■	■		■	■	■		■	■	■		■	■	■	
13	■	■	■	■	■	■	■		■	■	■		■	■	■	
14	■	■	■	■	■	■	■		■	■	■	■	■	■	■	
15	■	■	■	■	■	■	■	■	■	■	■	■	■	■	■	

Remarks 1. □ cell: Set to active period according to settings in TKBCR01 and TKBCR03 registers

■ cell: Set to active period according to “settings + 1” in TKB0CR1 and TKBCR03 registers

2. p = 0, 1

Figure 7-58. Waveform at Dithering Operation

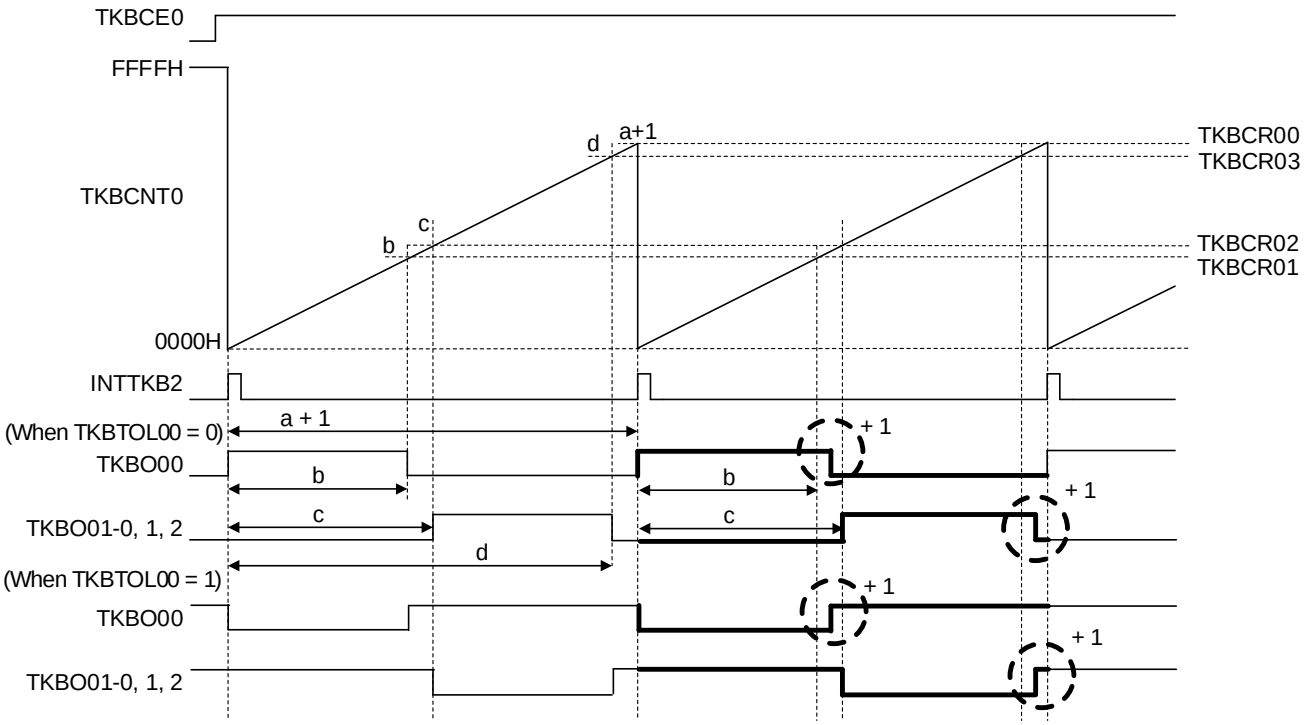

Figure 7-59. Waveform at Dithering Operation
(When TKBCR01 = TKBCR00 (100% nearest neighbor), TKBCR02 = TKBCR03 (0% nearest neighbor)

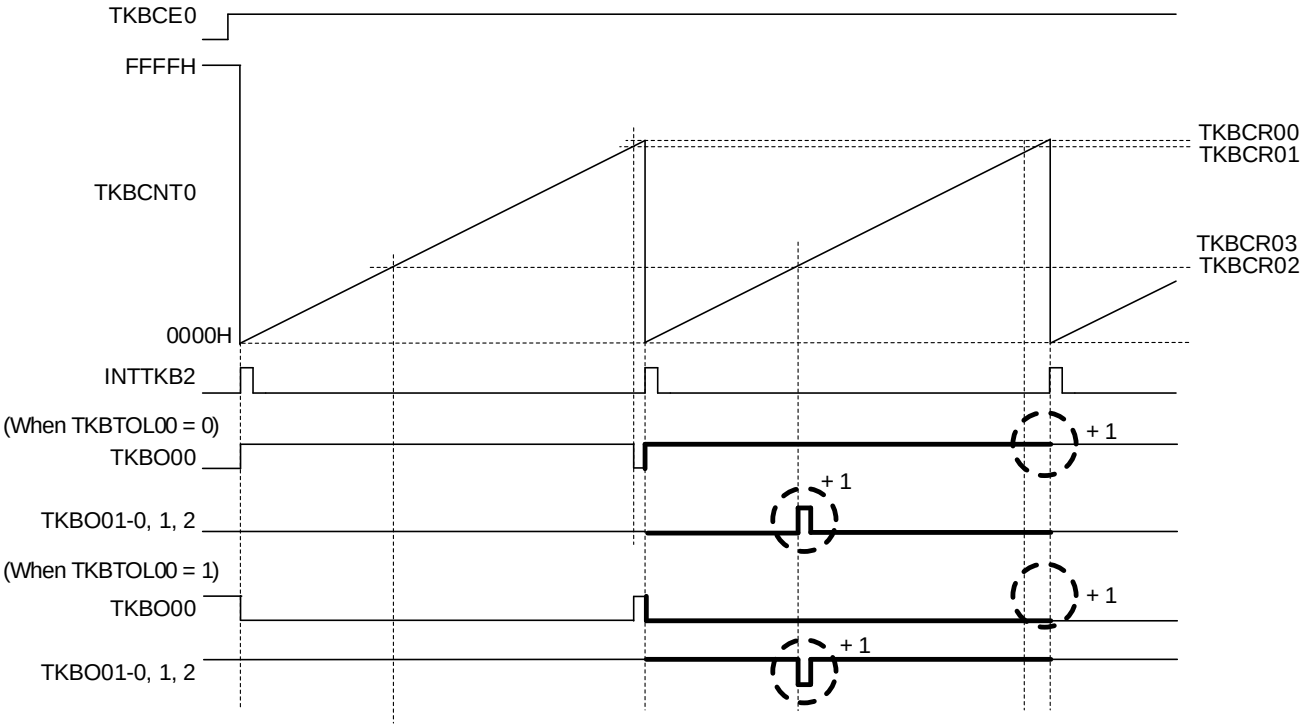

Figure 7-60. Waveform at Dithering Operation
(When TKBCR03 = TKBCR00 + 1)

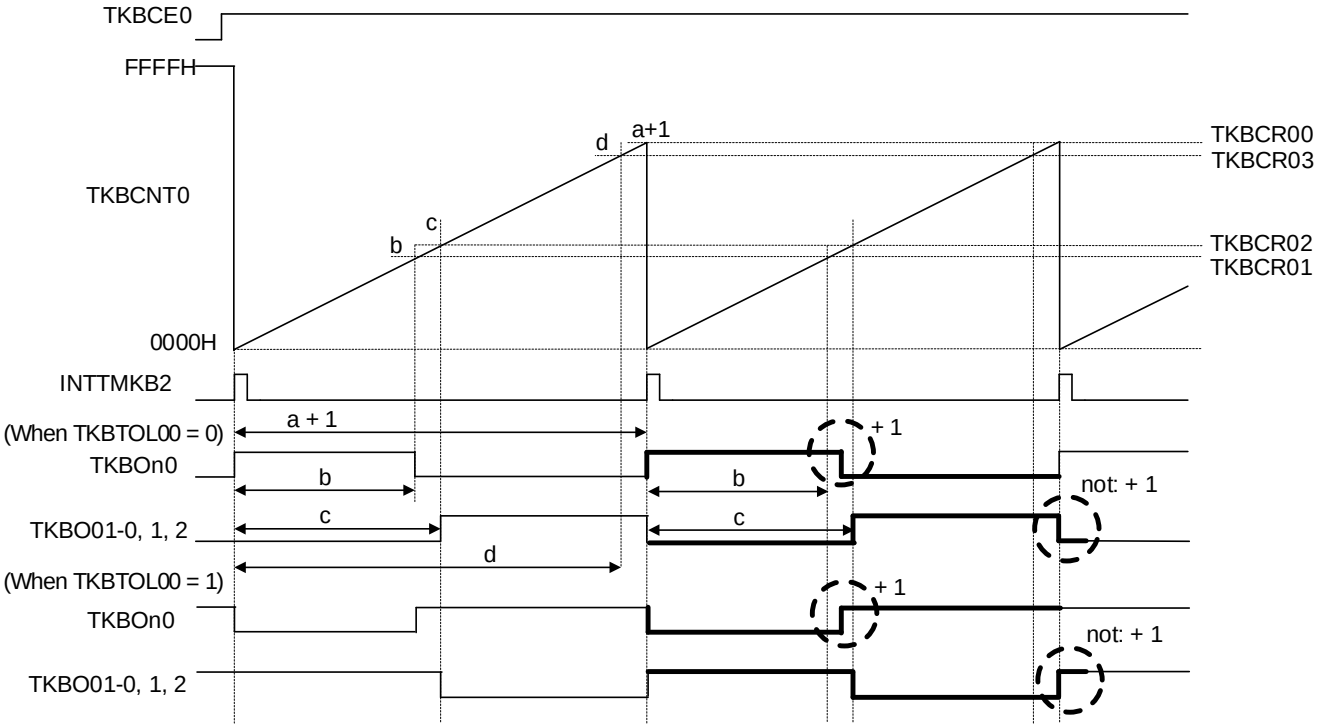

(1) Available operation mode

The following shows enable or disable status under each mode that is specified by the TKBCTL00 register (TKBSTS01 and TKBSTS00 bits) and the TKBCTL01 register (TKBMD01 and TKBMD00 bits).

Operation Mode	TKBMD01, TKBMD00	TKBSTS01, TKBSTS00	Setting
Standalone mode (Period controlled by TKBCR00)	00B	00B	Available
Standalone mode (Period controlled by external trigger input)	00B	01B/10B/11B	Not available
Interleave PFC output mode	11B	–	Not available

PWM output dithering function is available when external trigger input is not used and the period being controlled by TKBCR00.

TKBDNR00/TKBDNR01 controls PWM output dithering function of respective TKBO00/TKBO01-0, TKBO01-1, TKBO01-2.

Cautions 1. [Overwrite during Operation (TKBCE0 = 1) of TKBDNR00/TKBDNR01 Register]
Since TKBDNR00/TKBDNR01 owns the buffer, overwrite during the operation (TKBCE0 = 1) is available.
At this time, batch overwriting is available via writing 1 to the TKBRDT0 bit.

2. [Access by TKBCRLD00/TKBCRLD01 Register]
TKBCRLD00 is a 16-bit register mapping lower 8-bit TKBCR01 and TKBDNR00.
TKBCRLD01 is a 16-bit register mapping lower 8-bit TKBCR03 and TKBDNR01.
The value of TKBDNR00/TKBDNR01 is changed even when the TKBCRLD00/TKBCRLD01 register is accessed.
The value of TKBCR01/TKBCR03 is changed even when the TKBCRLD00/TKBCRLD01 register is accessed.
Only the lower 8 bits of TKBCR01/TKBCR03 are changed when the TKBCRLD00/TKBCRLD01 register is accessed.

3. [To Combine PWM Output Smooth Start Function with PWM Output Dithering Function]
PWM output dithering function is invalid during the execution of PWM output smooth start function (TKBSSF0p = 1).
PWM output dithering function is valid when PWM output smooth start function is stopped (TKBSSF0p = 0).

7.5.2 PWM output smooth start function

Timer KB20 has PMW output smooth start function corresponding to rush current control and over-voltage prevention. PWM output smooth start function begins at timer start timing. The process that a user has performed with software in the past can be easily accomplished with the optional function of the hardware.

Operation starts with the value set by the 16-bit timer KB2 smooth start default duty register (TKBSIR0p) and the PWM active period is sequentially incremented by one clock. The rate to increment the active period is specified by the 16-bit timer KB2 smooth start step width register (TKBSSR0p). When the value set by the TKBSSR0p register is N, after the currently set active period is output for N + 1 times, the active period is incremented by adding 1 and then the new active period is output for N + 1 times. After repeating this operation to increment the active period, PWM output smooth start function is cancelled when the same active period specified by the TKBCR01 and TKBCR03 registers is reached.

The 16-bit timer KB2 smooth start default duty register should be set according to the following condition;
0000H ≤ TKBSIR00 < TKBCR01 ≤ TKBCR00 + 1
TKBCR02 ≤ TKBSIR01 < TKBCR03 ≤ TKBCR00 + 1

Figure 7-61. Example of TKBO00 Output Using PWM Output Smooth Start Function

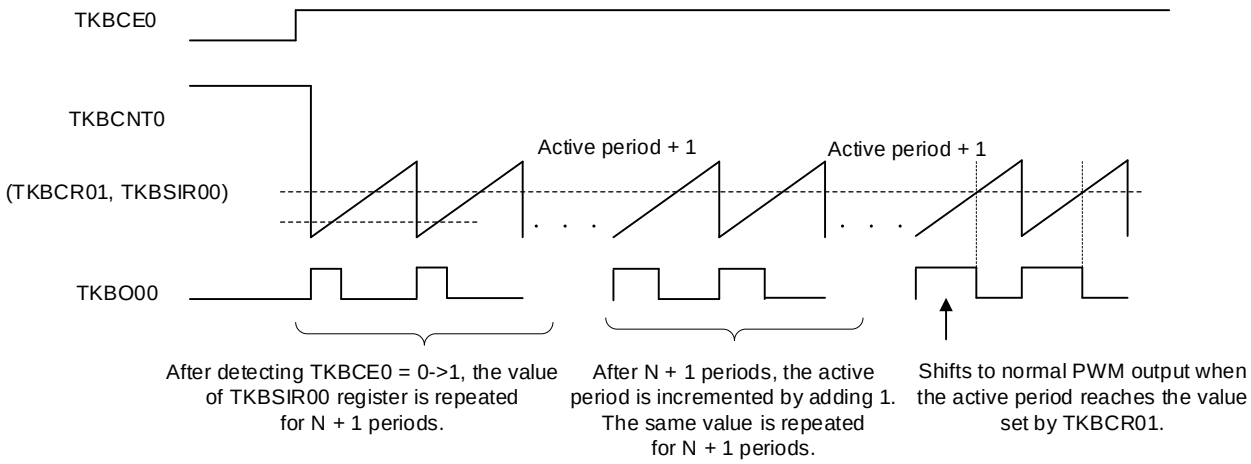

Remarks 1. N: Value set by TKBSSR0p register
2. p = 1, 0

(1) Operation mode available for PMW output smooth start function

Operation Mode	TKBMD01, TKBMD00	TKBSTS01, TKBSTS00	Setting
Standalone mode (Period controlled by TKBCR00)	00B	00B	Available
Standalone mode (Period controlled by external trigger input)	00B	01B/10B/11B	Not Available
Interleave PFC output mode	11B	–	Not Available

(2) Overwrite during operation (TKBCE0 = 1) of TKBSIR00/TKBSIR01/TKBSSR00/TKBSSR01 registers

Overwrite during the operation (TKBCE0 = 1) is available for TKBSIR00/TKBSIR01/TKBSSR00/TKBSSR01. TKBSIR00/TKBSIR01/TKBSSR00/TKBSSR01 own the buffer and batch overwriting is available via writing 1 to the TKBRDT0 bit. When restarting the smooth start function, clear the TKBCE0 bit to 0, and then set it to 1.

(3) Overwrite during operation (TKBCE0 = 1) of TKBCR00/TKBCR01/TKBCR02/TKBCR03/TKBSIR00/TKBSIR01/TKBSSR00/TKBSSR01 registers

When TKBRDT0 is set to 1 during the period of PWM output smooth start (TKBSSF00 = 1, TKBSSF01 = 1), batch overwrite is masked and the TKBSEF0p flag is set. In order to perform batch overwrite, clear TKBSEF0p and confirm TKBSSF0p becomes 0, then set TKBRDT0 to 1.

Figure 7-62. Overwrite During Smooth Start Function Operation (TKBSSF0p = 1) of TKBCR00/TKBCR01/TKBCR02/TKBCR03/TKBSIR00/TKBSIR01/TKBSSR00/TKBSSR01 Registers

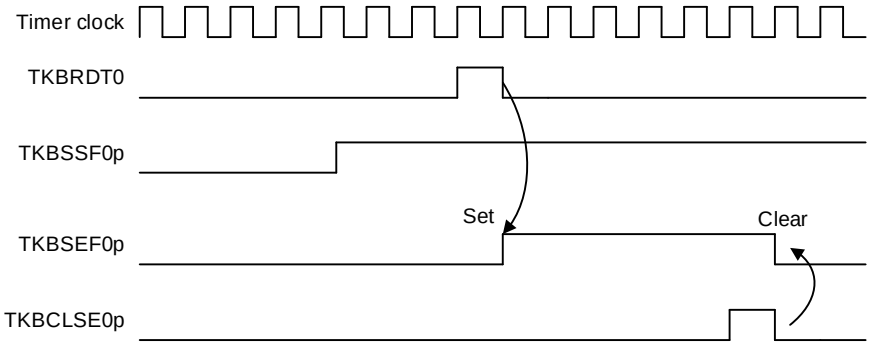

Remark p = 1, 0

(4) To combine PWM output smooth start function with PWM output dithering function

PWM output dithering function is invalid during the execution of PWM output smooth start function (TKBSSF0p = 1). PWM output dithering function will be valid when PWM output smooth start function is stopped (TKBSSF0p = 0).

(5) Completion of PWM output smooth start function and operation of TKBSSF0p

The following figure shows when TKBCR01 is 0007H, TKBDNR0p is 70H and TKBSSR0p is 02H. At the timing that TKBCR01 = 0007H and the value of TKBCR01 buffer for internal smooth start matches, TKBSSF0p is cleared, and then dithering function begins.

Figure 7-63. Completion of PWM Output Smooth Start Function and Operation of TKBSSF0p

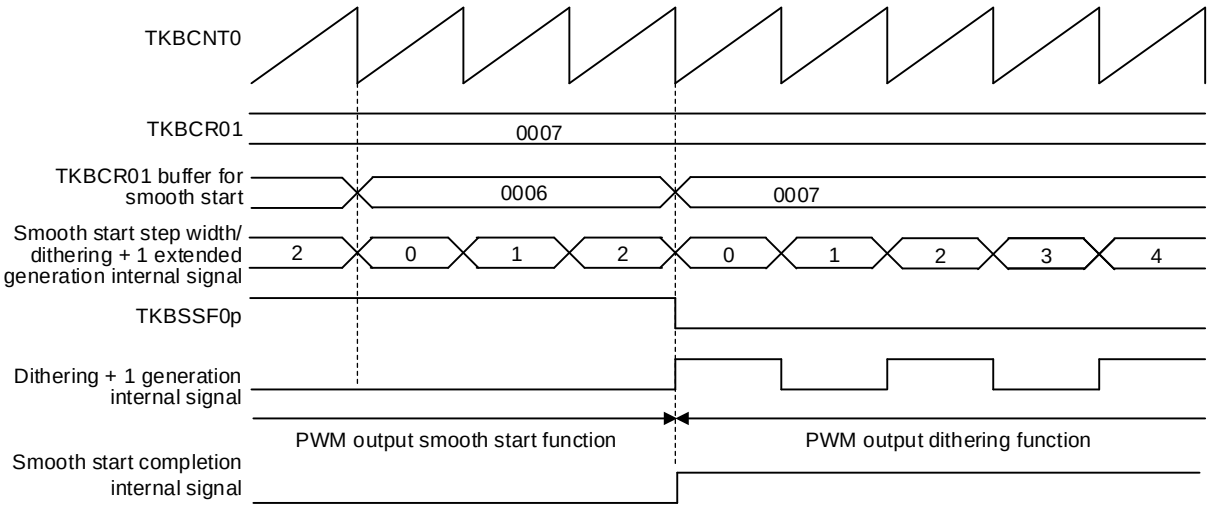

7.5.3 Maximum frequency limit function

Timer KB20 has a function that regulates the minimum period of the counter clear (maximum frequency) in the periodic control by external trigger or interleave PFC output mode.

When this function is used, if external trigger input which performs the counter clear occurs while the counter value is less than the setting value of the maximum frequency limit register (TKBMFR0), it performs the counter clear after it continues counting until it reaches the setting value of the TKBMFR0 register.

(1) Formula for maximum frequency limit (= 1/minimum period)

Minimum period (= 1/Maximum frequency limit) = (TKBMFR0 setting + 1) × Count clock period

Caution The following condition must be satisfied: TKBMFR0 setting ≤ TKBCR00 setting

When the counter value is smaller than TKBMFR0 at the timing for external trigger input detection, the TKBMFF0 flag is set to 1. The TKBMFF0 flag is cleared to 0 by writing 1 to the TKBCLMF0 bit.

Figure 7-64. Maximum Frequency Limit Function

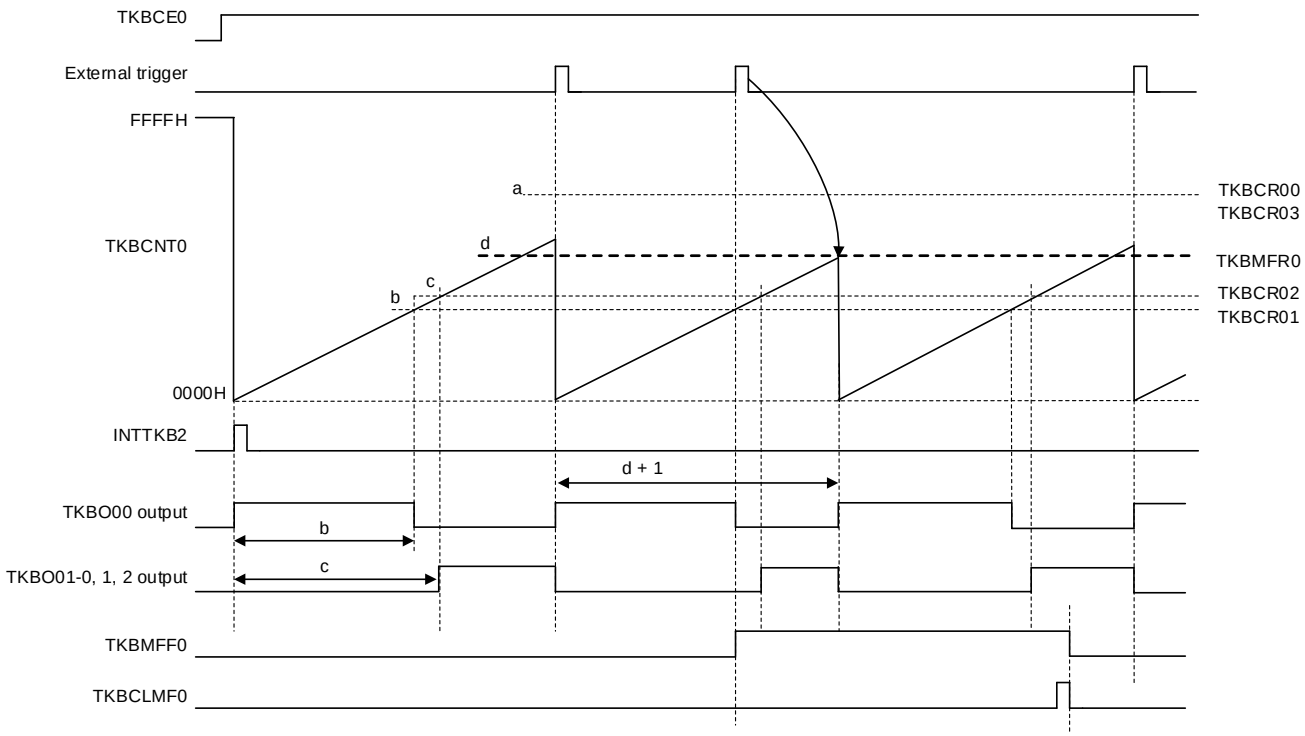

Remark Period controlled by external trigger input.

(2) Operation mode available for maximum frequency limit function

Operation Mode	TKBMD01, TKBMD00	TKBSTS01, TKBSTS00	Setting
Standalone mode (Period controlled by TKBCR00)	00B	00B	Not available
Standalone mode (Period controlled by external trigger input)	00B	01B/10B/11B	Available
Interleave PFC output mode	11B	–	Available

Remark Available when the period is controlled by external trigger input.

7.5.4 PWM output function for IH control

Timer KB20 has the timer output function for IH control.

- IH-PWM output restart by INTPx, comparator detection 0, 1
- IH-PWM output restart by matching 16-bit counter and value set in compare register (TKBCR00)
- Forced output stop (high impedance) by detecting valid edge of INTP0
- Changing output pin by PWCTKB register when operation is stopped

Make either of the settings to use the IH-PWM output function (TKBIHE0 = 1).

- Set a value other than 0000H in compare register 02 (TKBCR02).
- Set the timer clock select register (TKBPSCS0) and TKBCKS0 bit which selects the clock for timer KB20 so that the count clock (f_{KB20}) for 16-bit timer KB20 is that running at f_{CLK} or f_{HOCO} with no division.

TKBO01-0, TKBO01-1, and TKBO01-2 are used to perform PWM output for IH control. The output of TKBO00 is the default level specified by using bit 0 (TKBTOD00) of 16-bit timer KB2 output control register 00 (TKBIOC00).

After the counter (TKBCNT0) starts, timer KB20 starts PWM output when the counter value reaches the count specified by the TKBCR02 register.

Timer KB20 continues high-level PWM output until the counter value reaches the value specified by the TKBCR03 register. The PWM output is active while the counter value is between 0000H and the value specified by the TKBCR03 register. During this period, no IH-PWM output restart requests can be acknowledged. The PWM output is inactive while the counter value is between the value specified by the TKBCR03 register and the value specified by the TKBCR00 register. During this period, IH-PWM output restart requests can be acknowledged.

Figure 7-65. PWM Output Function for IH Control

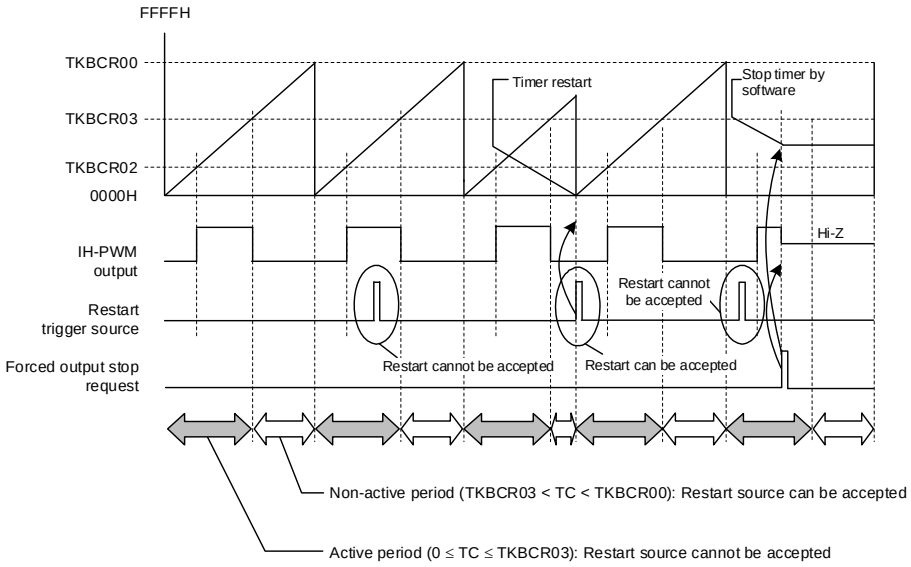

(1) Combinations of available operation mode

Operation Mode	TKBMD01, TKBMD00	ELSELRn2, ELSELRn1, ELSELRn0	Setting
Standalone mode (Period controlled by TKBCR00)	00B	000B	Available
Standalone mode (Period controlled by external trigger input)	00B	100B	Available
Interleave PFC output mode	11B	–	Not available

Caution When using the PWM output function for IH control, set the TKBSTS01 and TKBSTS00 bits to 00B.

In standalone operation mode, batch overwrite can be controlled at the timing when restart trigger source is generated.

At the match of restart trigger source or TKBCNT0 and TKBCR00, counter clear and compare register batch overwrite are implemented within reception period after request by the TKBRDT0 bit and by setting the TKBTSE0 bit to 1.

Same as in counter clear, batch overwrite by match detection is also implemented when TKBCR00 and counter (TKBCNT0) match before generation of restart trigger source.

Even if the restart trigger source is generated, batch overwrite does not occur unless 1 is written to the TKBRDT0 bit.

Figure 7-66. Updating Timing of Compare Registers 00, 02, 03 That Operates as PWM Output Function for IH Control

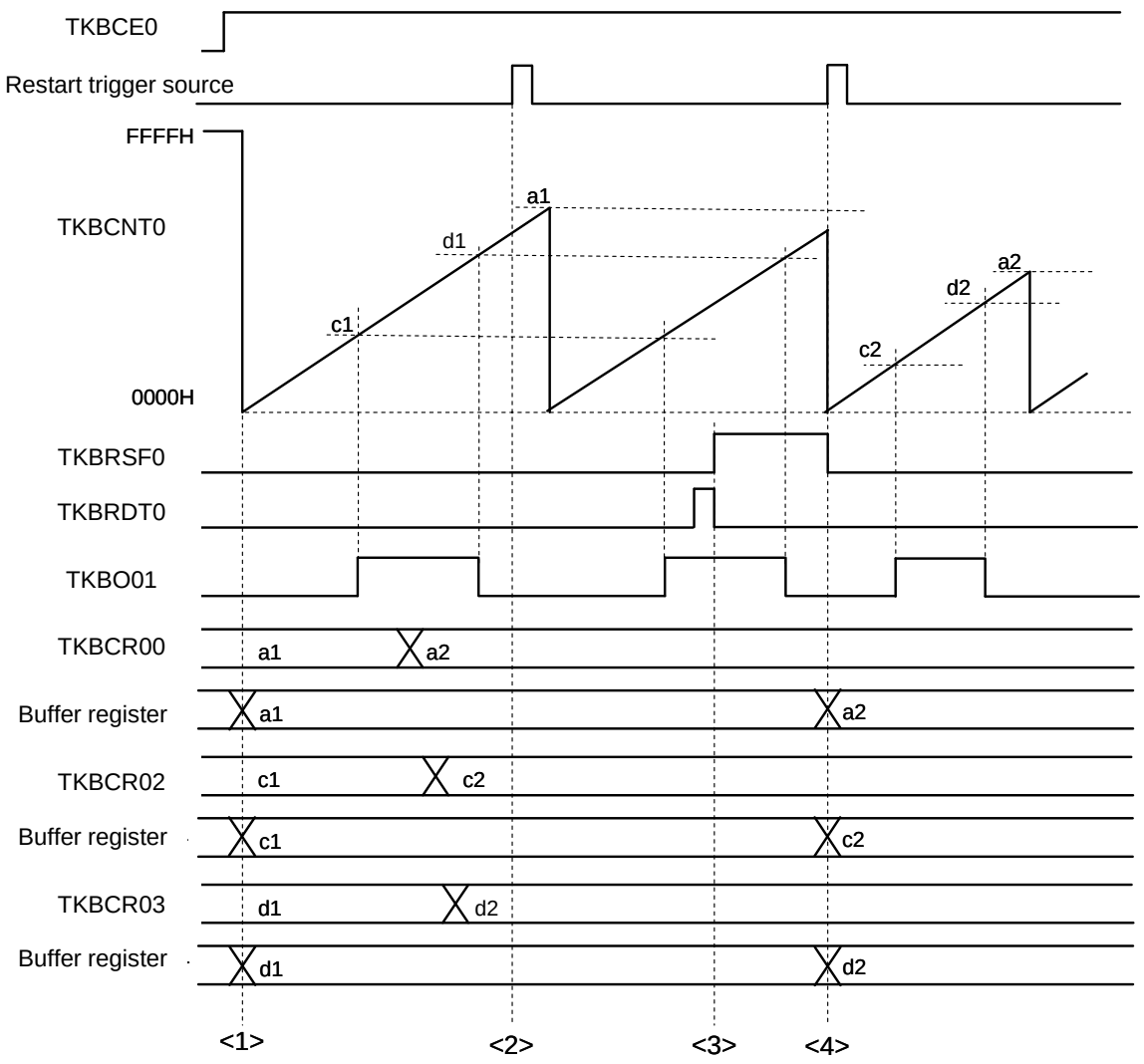

<1> Compare register setting is transferred to the buffer register at the timing when the TKBCE0 bit is set from 0 to 1 and TKBCNT0 starts counting operation.

<2> After the TKBCR00, TKBCR02, and TKBCR03 registers are overwritten, even when restart trigger source is generated, batch overwrite is not generated if 1 is not written to the TKBRDT0 bit.

<3> The batch overwrite trigger pending flag (TKBRSF0) is set to 1 by writing 1 to the TKBRDT0 bit.

<4> Compare register setting is transferred to the buffer register by the restart trigger source generated when the TKBRSF0 bit is 1. The TKBRSF0 bit is set to 0 simultaneously.

(2) Trigger input selection for forced output stop function

When the PWM output function for IH control is selected, the following can be selected.

- With/without noise filter
- Falling edge, rising edge, or both rising and falling edges can be selected

The following figure shows the circuit configuration.

Figure 7-67. Circuit Configuration of Forced Output Stop Function Trigger Input Selection (0) When PWM Output Function for IH Control is Used

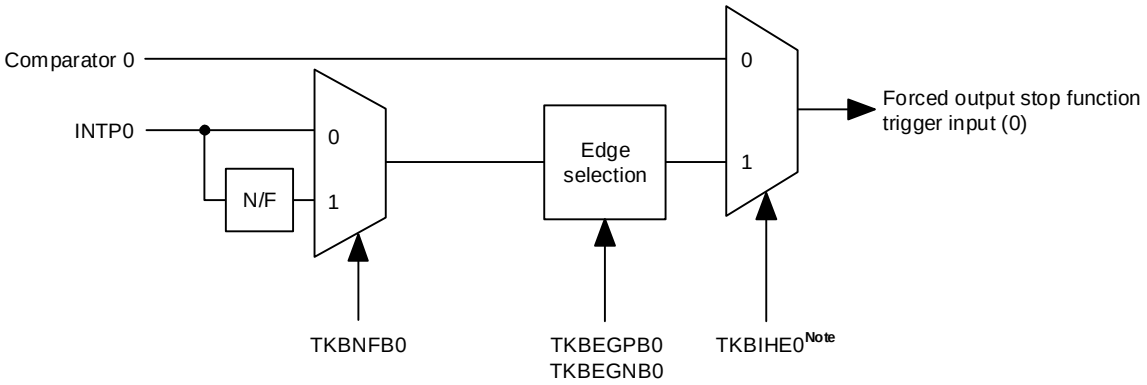

Note When using the PWM output function for IH control, set TKBHE0 = 1.

7.6 Forced Output Stop Function

Forced output stop function is a function to protect power supply, etc.

If any abnormal situation that occurs in a power circuit configured outside of a microcomputer leads to over-voltage of over-current, making voltage or current sense signal into TIN0/comparator can protect the circuit by maintaining the timer output high impedance or fixed output state without being intermediated by a CPU's program control.

With this function, abnormality is identified only when input signal edge have been detected. Fixed level without edge is not recognized as an abnormality.

The following figure shows the system structure of forced output stop function.

Figure 7-68. System Structure of Forced Output Stop Function

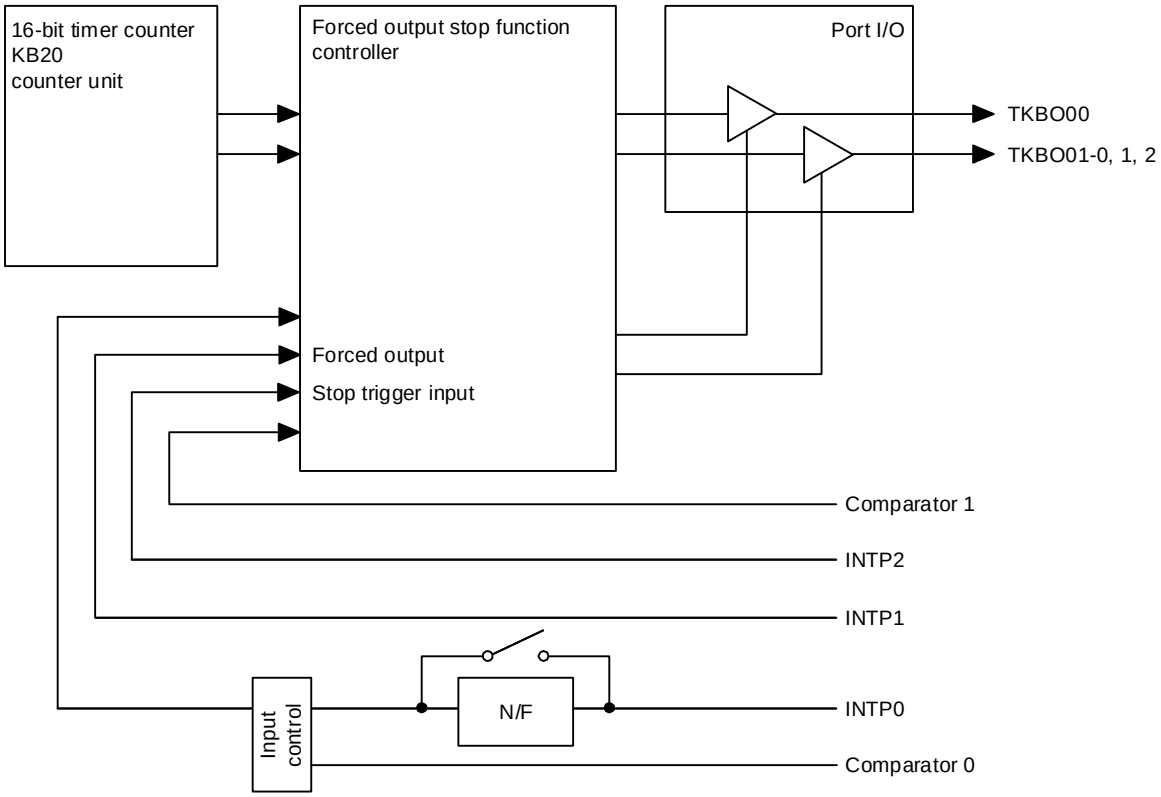

7.6.1 Forced output stop functions 1 and 2

There are two control methods for the forced output stop function. Forced output stop function 1 can be set to fixed level output or high-impedance output, and forced output stop function 2 can set to fixed level output only.

The differences of the control methods are shown below.

(1) Selectable output levels for forced output stop functions 1 and 2

Selectable Output Levels	Forced Output Stop Function			
	When Using the PWM Output Function for IH Control (TKBIHE0 = 1)		When not Using the PWM Output Function for IH Control (TKBIHE0 = 0)	
	Function 1	Function 2	Function 1	Function 2
High-impedance output	√	–	√	–
Low-level fixed output	–	–	√	√
High-level fixed output	–	–	√	√

(2) Start/cancel conditions for forced output stop functions 1 and 2

Function/Operation Details (Start of Forced Output Stop)	Forced Output Stop Function			
	When Using the PWM Output Function for IH Control (TKBIHE0 = 1)		When not Using the PWM Output Function for IH Control (TKBIHE0 = 0)	
	Function 1	Function 2	Function 1	Function 2
Forced output stop starts when the valid edge of the comparator 1 or 0 output or the rising edge of INTP1 is detected	–	–	√	√
Forced output stop starts when the valid edge of INTP0 is detected	√	–	–	–
Forced output stop starts when the rising edge of INTP2 is detected	–	–	–	√
Forced output stop is stopped by software bit (TKBPAHTS0n) setting.	–	–	√	–

Function/Operation Details (Cancel of Forced Output Stop)	Forced Output Stop Function			
	When Using the PWM Output Function for IH Control (TKBIHE0 = 1)		When not Using the PWM Output Function for IH Control (TKBIHE0 = 0)	
	Function 1	Function 2	Function 1	Function 2
Forced output stop cancelled by software bit (TKBPAHTT0n) setting.	√	–	√	–
Forced output stop cancelled in synchronization with TMKB period after the software bit (TKBPAHTT0n) setting.	–	–	√	–
Forced output stop cancelled at the next TMKB period after the start of forced output stop.	–	–	–	√
Forced output stop cancelled in synchronization with TMKB period after the detection of the start edge and reverse edge.	–	–	–	√

(3) Conditions of selectable input pins and available trigger bits for forced output stop functions 1 and 2

Selectable Input Pins	Forced Output Stop Function			
	When Using the PWM Output Function for IH Control (TKBIHE0 = 1)		When not Using the PWM Output Function for IH Control (TKBIHE0 = 0)	
	Function 1	Function 2	Function 1	Function 2
External input (INTP0)[Note]	√	–	–	–
External input (INTP1)	–	–	√	√
External input (INTP2)	–	–	–	√
Comparator 0	–	–	√	√
Comparator 1	–	–	√	√

Note Whether the noise filter is used or not can be selected for INTP0.

Available Trigger Bits	Forced Output Stop Function			
	When Using the PWM Output Function for IH Control (TKBIHE0 = 1)		When not Using the PWM Output Function for IH Control (TKBIHE0 = 0)	
	Function 1	Function 2	Function 1	Function 2
Software bit (TKBPAHTS0n)	–	–	√	–
Software bit (TKBPAHTT0n)	√	–	√	–

7.7 Operation of Forced Output Stop Function 1

7.7.1 I/O setting for forced output stop function 1

In forced output stop function 1, comparator 0/INTP0, comparator 1, or INTP1 is used as the trigger signal of forced output stop. Selectable output status for forced output stop is high impedance or high/low-level fixed. The tables below show trigger signal selection and output status settings.

(1) TKBO00 output control

● Forced output stop function trigger selection

TKBPACTL00	Input Selection
TKBPAHZS002	External interrupt (INTP1)
TKBPAHZS001	Comparator 1
TKBPAHZS000	Comparator 0

● Output selection

TKBPACTL00		Output Status
TKBPAMD001	TKBPAMD000	
0	0	High-impedance output
0	1	High-impedance output
1	0	Low-level fixed output
1	1	High-level fixed output

● Start of forced output stop function 1

TKBPACTL00		Start Condition Selection for Forced Output Stop Function 1
TKBPAHCM001	TKBPAHCM000	
0	0	The forced output stop function starts operating when an input that triggers the forced output stop function is detected, or when 1 is written to the TKBPAHTS00 bit.
0	1	
1	0	
1	1	

● Cancel of forced output stop function 1

TKBPACTL00		Cancel Condition Selection for Output of Forced Output Stop Function 1
TKBPAHCM001	TKBPAHCM000	
0	0	Forced output stop function 1 is cancelled by setting the TKBPAHTT00 bit to 1, regardless of the input level of forced output function stop input 1.
0	1	After the input of forced output stop function input 1 is cancelled, forced output stop function 1 is cancelled by setting the TKBPAHTT00 bit to 1. Setting the TKBPAHTT00 bit to 1 is invalid during the active period of the input.
1	0	After the TKBPAHTT00 bit is set to 1, forced output stop function 1 is cancelled in synchronization with the next restart of the counter, regardless of the input level of forced output stop function input 1.
1	1	After the input of forced output stop function input 1 is cancelled, forced output stop function 1 is cancelled in synchronization with the next restart of the counter after the TKBPAHTT00 bit is set to 1. Writing 1 to the TKBPAHTT00 bit is invalid during the active period of the input.

Cautions 1. Forced output stop function 1 cannot be used when using the PWM output function for IH control.

2. If the comparator 0 or 1 detection signal is selected as a trigger input for forced output stop function 1 while the C0EDG and C1EDG bits of the comparator filter control register (COMPFIR) are 1 (both-edge detection), forced output stop function 1 cannot be canceled by setting TKBPAHCM000 to 1. To cancel forced output stop function 1, be sure to set TKBPAHCM000 to 0.

3. INTP1 and INTP2, which are used to trigger forced output stop functions 1 and 2, are not affected by the setting of the external interrupt rising edge enable register (EGP0) and external interrupt falling edge enable register (EGN0).

(2) TKBO01-0, TKBO01-1, TKBO01-2 output control

● Forced output stop function trigger selection

TKBPACTL01	Input Selection	When Using the PWM Output Function for IH Control (TKBIHE0 = 1)	When not Using the PWM Output Function for IH Control (TKBIHE0 = 0)
TKBPAHZS012	External interrupt (INTP1)	–	√
TKBPAHZS011	Comparator 1	–	√
TKBPAHZS010	External interrupt (INTP0)	√	–
	Comparator 0	–	√

● Output selection

TKBPACTL01		Output Status	When Using the PWM Output Function for IH Control (TKBIHE0 = 1)	When not Using the PWM Output Function for IH Control (TKBIHE0 = 0)
TKBPAMD011	TKBPAMD010			
0	0	High-impedance output	√	√
0	1	High-impedance output	–	√
1	0	Low-level fixed output	–	√
1	1	High-level fixed output	–	√

● Start of forced output stop function 1

TKBPACTL01		Start Condition Selection for Forced Output Stop Function 1	When Using the PWM Output Function for IH Control (TKBIHE0 = 1)	When not Using the PWM Output Function for IH Control (TKBIHE0 = 0)
TKBPAMD011	TKBPAMD010			
0	0	The forced output stop function starts operating when an input that triggers the forced output stop function is detected, or when 1 is written to the TKBPAHTS01 bit.	√	√
0	1		–	√
1	0		–	√
1	1		–	√

● Cancel of forced output stop function 1

TKBPACTL01		Cancel Condition Selection for Output of Forced Output Stop Function 1	When Using the PWM Output Function for IH Control (TKBIHE0 = 1)	When not Using the PWM Output Function for IH Control (TKBIHE0 = 0)
TKBPAMD011	TKBPAMD010			
0	0	Forced output stop function 1 is cancelled by setting the TKBPAHTT01 bit to 1, regardless of the input level of forced output function stop input 1.	√	√
0	1	After the input of forced output stop function input 1 is cancelled, forced output stop function 1 is cancelled by setting the TKBPAHTT01 bit to 1. Setting the TKBPAHTT01 bit to 1 is invalid during the active period of the input.	–	√
1	0	After the TKBPAHTT01 bit is set to 1, forced output stop function 1 is cancelled in synchronization with the next restart of the counter, regardless of the input level of forced output stop function input 1.	–	√
1	1	After the input of forced output stop function input 1 is cancelled, forced output stop function 1 is cancelled in synchronization with the next restart of the counter after the setting TKBPAHTT01 bit is set to 1. Writing 1 to the TKBPAHTT00 bit is invalid during the active period of the input.	–	√

Cautions 1. If the comparator 0 or 1 detection signal is selected as a trigger input for forced output stop function 1 while the C0EDG and C1EDG bits of the comparator filter control register (COMPFIR) are 1 (both-edge detection), forced output stop function 1 cannot be canceled by setting TKBPAHCM010 to 1. To cancel forced output stop function 1, be sure to set TKBPAHCM010 to 0.

2. INTP1 and INTP2, which are used to trigger forced output stop functions 1 and 2, are not affected by the setting of the external interrupt rising edge enable register (EGP0) and external interrupt falling edge enable register (EGN0). Only the rising edge is valid. Use the TKBEGPB0 and TKBEGNB0 bits of 16-bit timer KB2 output control register 01 (TKBIOC01) to select the valid edge of the INTP0 signal used by forced output stop function 1.

7.7.2 Basic operation of forced output stop function 1

(1) TKBPAHCM0n1, TKBPAHCM0n0 bits = 00

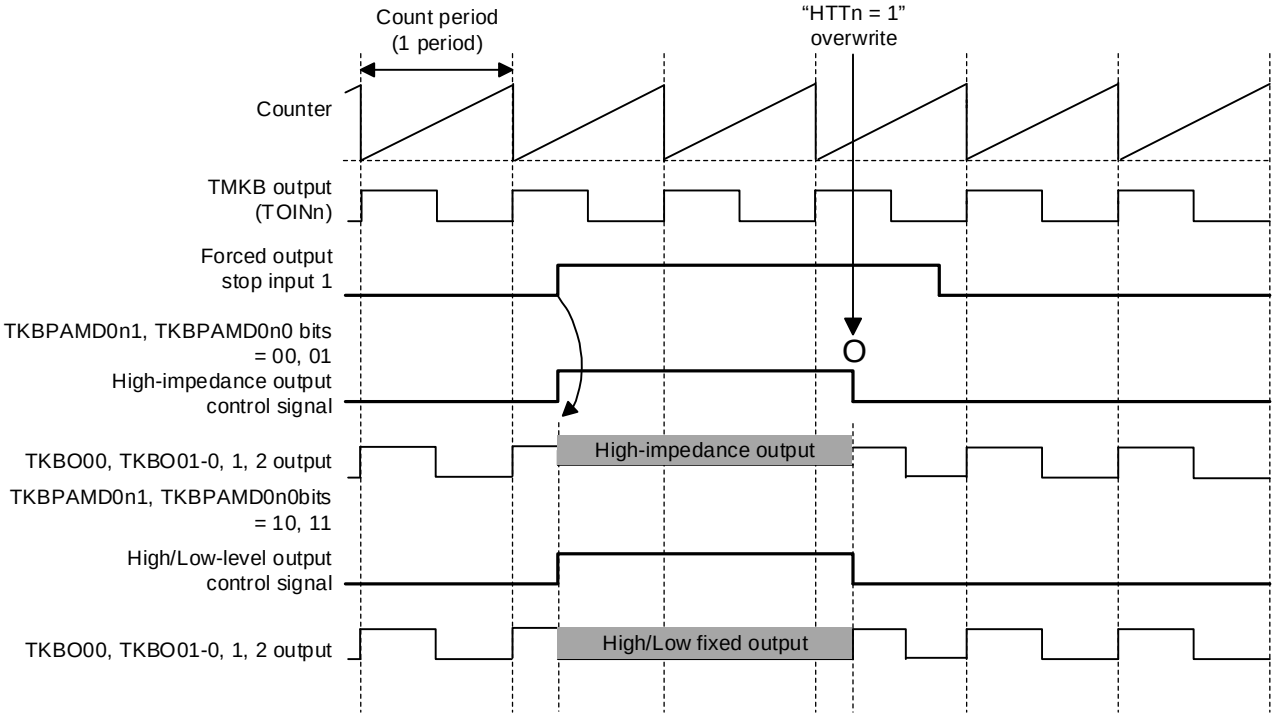

Remark n = 0, 1

● TKBPAMD0n1, TKBPAMD0n0 bits = 00, 01

When the rising edge of forced output stop input 1 is detected, the high-impedance output control signal is set to high level and TKBO00, TKBO01-0, TKBO01-1, TKBO01-2 output becomes high impedance.

Regardless of the level of forced output stop input 1, the high-impedance output control signal is set to low level by writing 1 to the TKBPAHTT0n bit in the TKBPAHFT0 register, and TKBO00, TKBO01-0, TKBO01-1, TKBO01-2 return to PWM output.

The high-level period of the high-impedance output control signal is the period for forced output stop 1 (high-impedance output).

● TKBPAMD0n1, TKBPAMD0n0 bits = 10, 11

When the rising edge of forced output stop input 1 is detected, the high/low-level output control signal is set to high level and TKBO00, TKBO01-0, TKBO01-1, TKBO01-2 output is fixed to high/low level according to the setting of the TKBPAMD00n bit.

Regardless of the level of forced output stop input 1, the high/low-level output control signal is set to low level by writing 1 to the TKBPAHTT0n bit in the TKBPAHFT0 register, and TKBO00, TKBO01-0, TKBO01-1, TKBO01-2 return to PWM output.

The high-level period of the high/low-level output control signal is the period for forced output stop 1 (high/low-level fixed output).

Caution When using the PWM output function for IH control, set the TKBPAHCM0n1 and TKBPAHCM0n0 bits to 00, and the TKBPAMD0n1 and TKBPAMD0n0 bits to 00.

(2) TKBPAHCM0n1, TKBPAHCM0n0 bits = 01

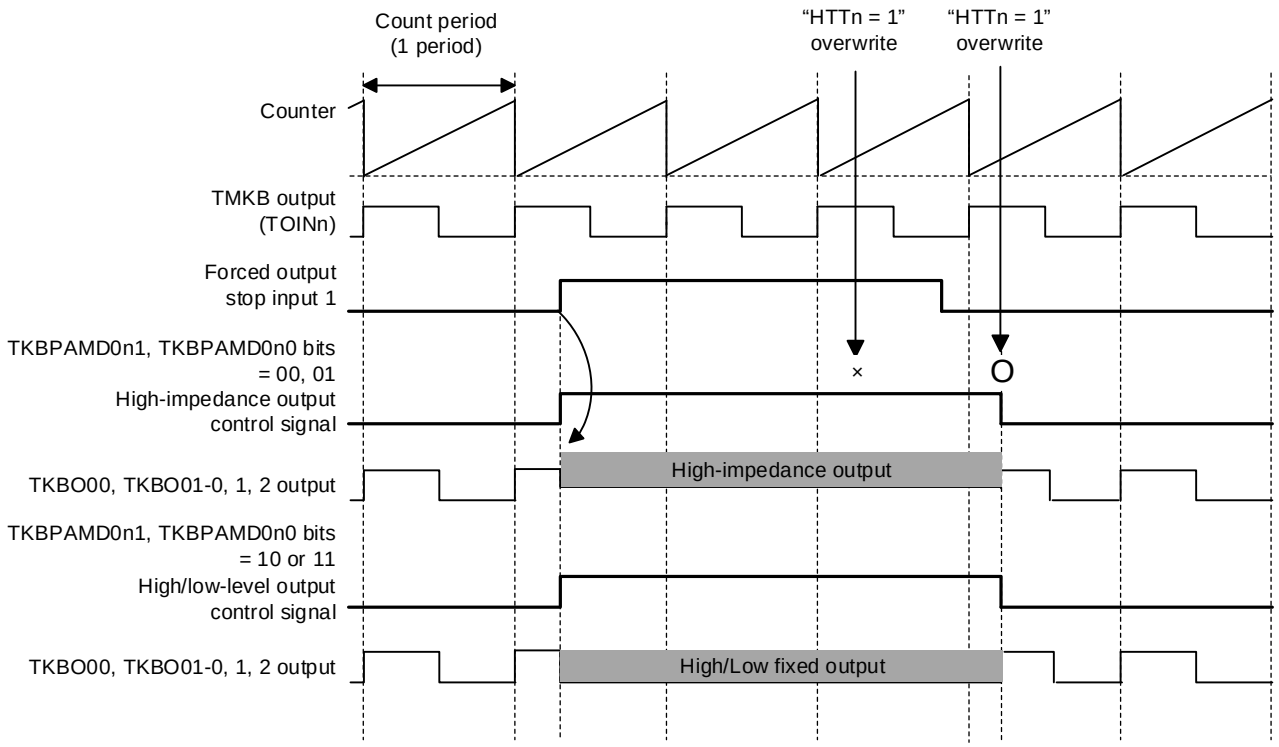

Remark n = 0, 1

● TKBPAMD0n1, TKBPAMD0n0 bits = 00, 01

When the rising edge of forced output stop input 1 is detected, the high-impedance output control signal is set to high level and TKBO00, TKBO01-0, TKBO01-1, TKBO01-2 output becomes high impedance.

Writing 1 to the TKBPAHTT0n bit in the TKBPAHFT0 register is invalid during the high-level period of the input of forced output stop input 1. After forced output stop input 1 changes to low level, the high-impedance output control signal is set to low level by writing 1 to the TKBPAHTT0n bit, and TKBO00, TKBO01-0, TKBO01-1, TKBO01-2 return to PWM output.

The high-level period of the high-impedance output control signal is the period for forced output stop 1 (high-impedance output).

● TKBPAMD0n1, TKBPAMD0n0 bits = 10, 11

When the rising edge of forced output stop input 1 is detected, the high/low-level output control signal is set to high level and TKBO00, TKBO01-0, TKBO01-1, TKBO01-2 output is fixed to high/low level according to the setting of the TKBPAMD00n bit.

Writing 1 to the TKBPAHTT0n bit in the TKBPAHFT0 register is invalid during the high-level period of the input of forced output stop input 1. After input of forced output stop input 1 changes to low level, the fixed low-level/high-level of TKBPATFOUTn is cancelled by writing 1 to the TKBPAHTT0n bit, and PWM is output from TKBO00, TKBO01-0, TKBO01-1, TKBO01-2.

Caution When using the PWM output function for IH control, the TKBPAHCM0n1 and TKBPAHCM0n0 bits cannot be set to 01.

(3) TKBPAHCM0n1, TKBPAHCM0n0 bits = 10

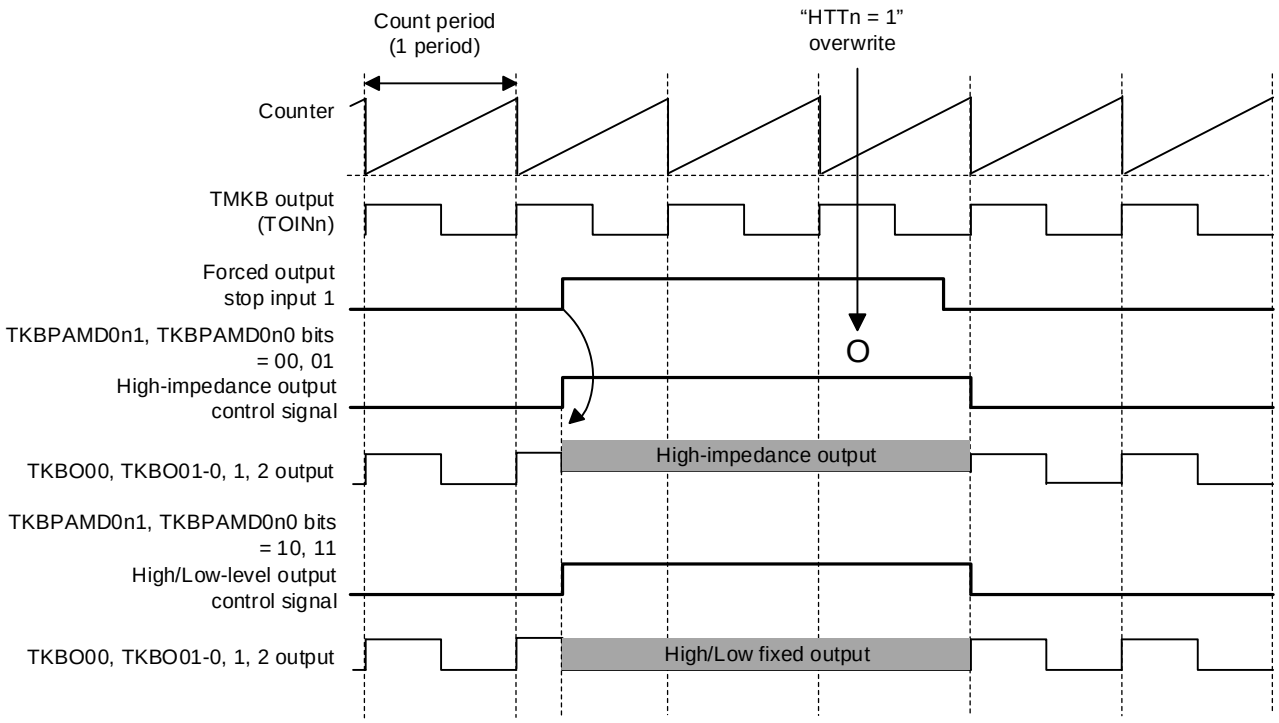

Remark n = 0, 1

● TKBPAMD0n1, TKBPAMD0n0 bits = 00, 01

When the rising edge of forced output stop input 1 is detected, the high-impedance output control signal is set to high level and TKBO00, TKBO01-0, TKBO01-1, TKBO01-2 output becomes high impedance.

Regardless of the level of forced output stop input 1, the high-impedance output control signal is set to low level in synchronization with the restart of the TMKB counter by writing 1 to the TKBPAHTT0n bit.

The high-level period of the high-impedance output control signal is the period for forced output stop 1 (high-impedance output).

● TKBPAMD0n1, TKBPAMD0n0 bits = 10, 11

When the rising edge of forced output stop input 1 is detected, the high/low-level output control signal is set to high level and TKBO00, TKBO01-0, TKBO01-1, TKBO01-2 output is fixed to high/low level according to the setting of the TKBPAMD00n bit.

Regardless of the level of forced output stop input 1, the high/low-level output control signal is set to low level in synchronization with the restart of the TMKB counter by writing 1 to the TKBPAHTT0n bit, and TKBO00, TKBO01-0, TKBO01-1, TKBO01-2 return to PWM output.

The high-level period of the high/low-level output control signal is the period for forced output stop 1 (high/low-level fixed output).

Caution When using the PWM output function for IH control, the TKBPAHCM0n1 and TKBPAHCM0n0 bits cannot be set to 10.

(4) TKBPAHCM0n1, TKBPAHCM0n0 bits = 11

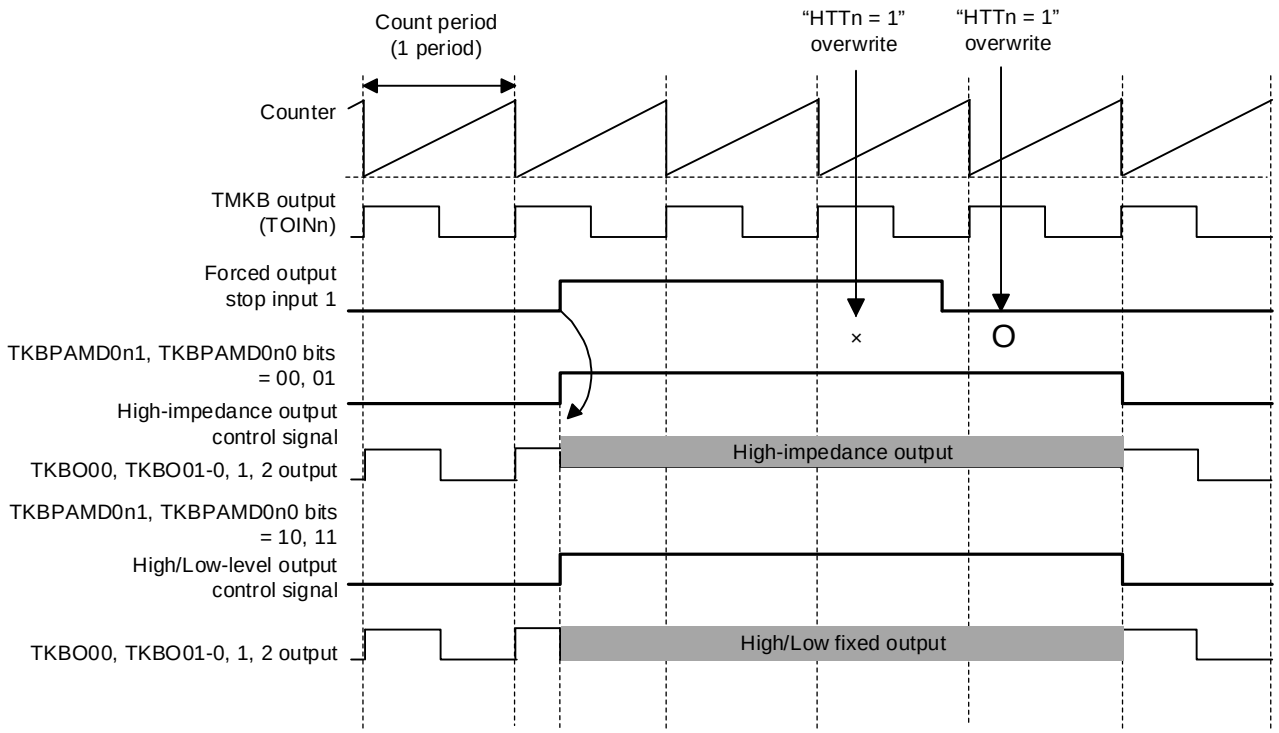

Remark n = 0, 1

● TKBPAMD0n1, TKBPAMD0n0 bits = 00, 01

When the rising edge of forced output stop input 1 is detected, the high-impedance output control signal is set to high level and TKBO00, TKBO01-0, TKBO01-1, TKBO01-2 output becomes high impedance.

Writing 1 to the TKBPAHTT0n bit in the TKBPAHFT0 register is invalid during the high-level period of the input of forced output stop input 1.

After forced output stop input 1 changes to low level, the high-impedance output control signal is set to low level in synchronization with the restart of the TMKB counter by writing 1 to the TKBPAHTT0n bit.

The high-level period of the high-impedance output control signal is the period for forced output stop 1 (high-impedance output).

● TKBPAMD0n1, TKBPAMD0n0 bits = 10, 11

When the rising edge of forced output stop input 1 is detected, the high/low-level output control signal is set to high level and TKBO00, TKBO01-0, TKBO01-1, TKBO01-2 output is fixed to high/low level according to the setting of the TKBPAMD00n bit.

The high/low-level output control signal is set to low level in synchronization with the restart of the TMKB counter by writing 1 to the TKBPAHTT0n bit in the TKBPAHFT0 register during the high-level period of forced output stop 1, and TKBO00, TKBO01-0, TKBO01-1, TKBO01-2 return to PWM output.

The high-level period of the high/low-level output control signal is the period for forced output stop 1 (high/low-level fixed output).

Caution When using the PWM output function for IH control, the TKBPAHCM0n1 and TKBPAHCM0n0 bits cannot be set to 11.

7.7.3 Notes on using forced output stop function 1

1. When TKBPAHCMn = 10 or 11, forced output stop is cancelled as follows.

(1) Setting TKBPAHCM0n = 10

(a) When forced output stop input 1 occurs

When TKBPAHCM0n = 10, if forced output stop input 1 is detected after setting TKBPAHTT0n = 1 and before the restart of the counter, stop input is ignored, and forced output stop is cancelled at the next restart of the counter.

(b) When TKBPAHTS0n is set to 1

When TKBPAHCM0n = 10, if TKBPAHTS0n is set to 1 after setting TKBPAHTT0n = 1 and before the next restart of the counter, setting TKBPATHTT0n = 1 is invalid, and forced output stop is not cancelled at the next restart of the counter. To cancel forced output stop, set TKBPAHTT0n to 1 again.

(2) Setting TKBPAHCM0n = 11

(a) Forced output stop input 1 occurs

When TKBPAHCM0n = 11, if forced output stop input 1 is detected after setting TKBPAHTT0n = 1 and before the next counter period, setting TKBPATHTT0n = 1 is invalid, and forced output stop is not cancelled at the next restart of the counter. To cancel forced output stop, set TKBPAHTS0n to 1 again.

(b) TKBPAHTS0n is set to 1

When TKBPAHCM0n = 11, if TKBPAHTS0n is set to 1 after setting TKBPAHTT0n = 1 and before the next counter period, setting TKBPATHTT0n = 1 is invalid and, forced output stop is not cancelled at the next restart of the counter. To cancel forced output stop, set TKBPAHTT0n to 1 again.

2. Timing for setting TKBPAHTS0n and TKBPATHTT0n when TKBPAHCM0n = 01, 11

When TKBPAHCM0n = 01, 11, wait until 1 f_{CLK} clock elapses before setting TKBPATHTT0n to 1 after setting TKBPAHTS0n = 1.

7.8 Operation of Forced Output Stop Function 2

7.8.1 I/O setting for forced output stop function 2

For forced output stop function 2, comparator 0, comparator 1, INTP1, or INTP2 is used as the trigger signal to stop forced output.

The output status for forced output stop is fixed to high/low-level. The tables below show trigger signal selection and output status settings.

(1) TKBO00 output control

● Forced output stop function trigger selection

TKBPACTL00	Input Selection
TKBPAFXS003	External interrupt (INTP2)
TKBPAFXS002	External interrupt (INTP1)
TKBPAFXS001	Comparator 1
TKBPAFXS000	Comparator 0

● Output selection

TKBPACTL00		Output Status
TKBPAMD001	TKBPAMD000	
0	0	Low-level fixed output
0	1	High-level fixed output
1	0	Low-level fixed output
1	1	High-level fixed output

Caution Operation of forced output stop function 2 does not affect the high-impedance output control signal. Do not select the high-impedance output control signal using the TKBPACTL00 register.

● Start of forced output stop function 2

TKBPACTL00 TKBPAFCM00	Start Condition Selection for Forced Output Stop Function 2
0	Forced output stop function is started when forced output stop function trigger input is detected.
1	

● Cancel of forced output stop function 2

TKBPACTL00 TKBPAFCM00	Cancel Condition Selection for Output of Forced Output Stop Function 2
0	Forced output stop function 2 is started, and cancelled in synchronization with the next restart of the counter.
1	Forced output stop function 2 is started, and cancelled in synchronization with the next restart of the counter after cancellation of the trigger is detected.

Cautions 1. If the comparator 0 or 1 detection signal is selected as a trigger input for forced output stop function 2 while the C0EDG and C1EDG bits of the comparator filter control register (COMPFIR) are 1 (both-edge detection), forced output stop function 2 cannot be canceled by setting TKBPAFCM00 to 1. To cancel forced output stop function 2, be sure to set TKBPAFCM00 to 0.

2. INTP1 and INTP2, which are used to trigger forced output stop functions 1 and 2, are not affected by the setting of the external interrupt rising edge enable register (EGP0) and external interrupt falling edge enable register (EGN0).

(2) TKBO01-0, TKBO01-1, TKBO01-2 output control

● Forced output stop function trigger selection

TKBPACTL01	Input Selection
TKBPAFXS013	External interrupt (INTP2)
TKBPAFXS012	External interrupt (INTP1)
TKBPAFXS011	Comparator 1
TKBPAFXS010	Comparator 0

● Output selection

TKBPACTL01		Output Status
TKBPAMD011	TKBPAMD010	
0	0	Low-level fixed output
0	1	High-level fixed output
1	0	Low-level fixed output
1	1	High-level fixed output

Caution Operation of forced output stop function 2 does not affect the high-impedance output control signal. Do not select the high-impedance output control signal using the TKBPACTL01 register.

● Start of forced output stop function 2

TKBPACTL01 TKBPAFCM01	Start Condition Selection for Forced Output Stop Function 2
0 1	Forced output stop function 2 is started when forced output stop function trigger input is detected.

● Cancel of forced output stop function 2

TKBPACTL01 TKBPAFCM01	Output Cancel Condition Selection for Forced Output Stop Function 2
0	Forced output stop function 2 is started, and cancelled in synchronization with the next restart of the counter.
1	Forced output stop function 2 is started, and cancelled in synchronization with the next restart of the counter after cancellation of the trigger is detected.

Cautions 1. If the comparator 0 or 1 detection signal is selected as a trigger input for forced output stop function 2 while the C0EDG and C1EDG bits of the comparator filter control register (COMPFIR) are 1 (both-edge detection), forced output stop function 2 cannot be canceled by setting TKBPAFCM01 to 1. To cancel forced output stop function 2, be sure to set TKBPAFCM01 to 0.

2. INTP1 and INTP2, which are used to trigger forced output stop functions 1 and 2, are not affected by the setting of the external interrupt rising edge enable register (EGP0) and external interrupt falling edge enable register (EGN0). Only the rising edge is valid.

7.8.2 Basic operation of forced output stop function 2

(1) Forced output stop function 2 when TKBPAFCM0n = 0

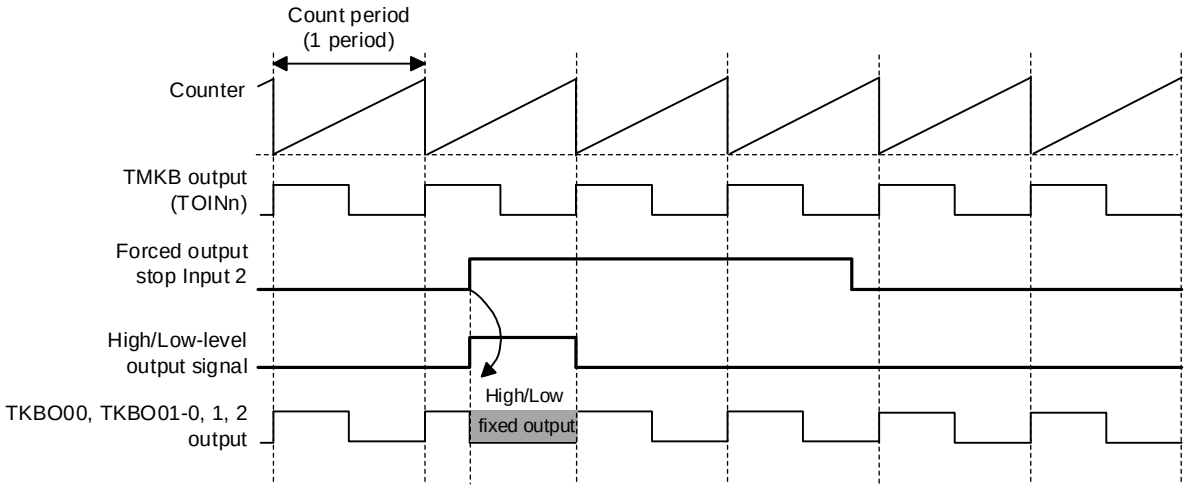

When the rising edge of forced output stop input 2 is detected, TKBPATFOUTn output is fixed to low or high level according to TKBPAMD00n setting.

Regardless of the input level of forced output stop input 2, the fixed level of TKBPATFOUTn is cancelled in synchronization with the next restart of the TMKB counter, and PWM is output from TKBO00, TKBO01-0, TKBO01-1, and TKBO01-2.

(2) Forced output stop function 2 when TKBPAFCM0n = 1

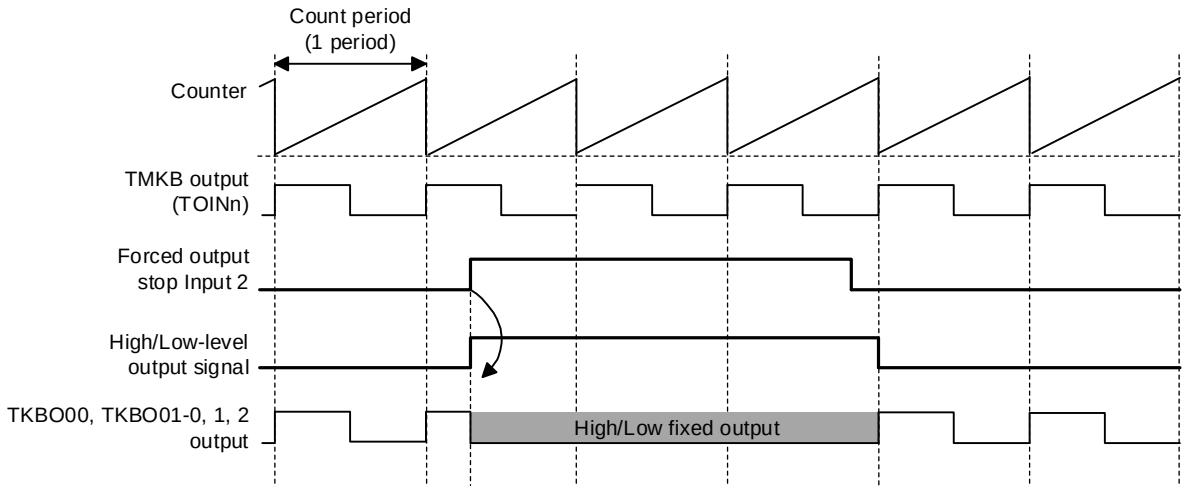

When the rising edge of forced output stop input 2 is detected, TKBPATFOUTn output is fixed to low or high level according to TKBPAMD00n setting.

After the rising edge of forced output stop input 2 is detected, the fixed level of TKBPATFOUTn is cancelled in synchronization with the next restart of the TMKB counter, and PWM is output from TKBO00, TKBO01-0, TKBO01-1, and TBO01-2.

7.9 Cautions When Using 16-bit Timer KB20

7.9.1 Using 16-bit timer KB20 together with the LIN-bus functions

16-bit timer KB20 cannot be used together with the LIN-bus functions. When using the LIN-bus functions (that is, when the input switch control register (ISC) is set to any value other than its initial value of 00H), be sure to set bit 4 (TKB2EN) of the peripheral enable register (PER1) to 0 (which sets timer KB20 to the reset status).

7.9.2 Cautions when using the counter restart trigger

(1) Using external interrupts (INTP0 to INTP7)

INTP0 to INTP7, which are used as counter restart trigger sources, are not affected by the settings of the external interrupt rising edge enable register (EGP0) or external interrupt falling edge enable register (EGN0). Only the rising edge is valid. However, when using the PWM output function for IH control, the active edge can be selected by 16-bit timer KB2 output control register 01 (TKBIOC01).

(2) Using comparator 0 and comparator 1 detection

When using comparator 0 and comparator 1 detection for counter restart trigger sources 0 to 2, the edge to be detected can be selected by setting bits 2, 3, 6, and 7 (C0EPO, C0EDG, C1EPO, and C1EDG) of the comparator filter control register (COMPFIR).

7.9.3 Cautions when using the forced output stop function (when not using the PWM output function for IH control)

(1) Using external interrupts (INTP1 and INTP2)

INTP1 and INTP2, which are used for forced output stop functions 1 and 2, are not affected by the settings of the external interrupt rising edge enable register (EGP0) or external interrupt falling edge enable register (EGN0). Only the rising edge is valid.

(2) Using comparator 0 and comparator 1 detection

When using comparator 0 and comparator 1 detection for forced output stop functions 1 and 2, the edge to be detected can be selected by setting bits 2, 3, 6, and 7 (C0EPO, C0EDG, C1EPO, and C1EDG) of the comparator filter control register (COMPFIR).

Note, however, that if bits 3 and 7 (C0EDG, and C1EDG) of the COMPFIR register are set to 1 (both-edge detection), TKBPAHCM0n0 = 1 cannot be selected as a condition for canceling forced output stop function 1. In this case, be sure to select TKBPAHCM0n0 = 0. Also, TKBPAFM0n = 1 cannot be selected as a condition for canceling forced output stop function 2. Always select TKBPAFCMn0 = 0.

Remark n = 0, 1

7.9.4 Cautions when using the PWM output function for IH control

(1) Using other operation mode and function with PWM output function for IH control

Interleave PFC output mode, PWM output dithering function, PWM output smooth start function, and maximum frequency limit function cannot be used together with the PWM output function for IH control.

(2) Selecting the counter restart trigger source

When using the PWM output function for IH control, counter restart trigger sources 0, 1, and 2 cannot be selected. Be sure to set bits 1 and 0 of 16-bit timer KB2 operation control register 00 (TKBCTL00) to their initial value (00).

(3) Timer output

Timer output (TKBO00) cannot be used when using the PWM output function for IH control. Be sure to set bit 0 of 16-bit timer KB2 output control register 01 (TKBIOC01) to its initial value (0).

Only combination of low/high or high/low can be used for setting of default level/active level. Be sure to set bits 3 and 1 of 16-bit timer KB2 output control register 0 (TKBIOC00) to “00” or “11”.

(4) Cautions when using the forced output stop function

When using the forced output stop function, the PWM output function for IH control can be used under the following conditions:

- Only the control settings related to timer output (TKBO01-0, TKBO01-1, and TKBO01-2) can be specified.
- Only forced output stop function 1 can be used.
- When the forced output stop function is executed, only high-impedance output can be selected.
- Only INTP0 can be selected as the trigger for starting the forced output stop function.
- Software cannot be used to start the forced output stop function.

Therefore, use the registers that control the forced output stop function under the following conditions:

Be sure to set forced output stop function control register 0 (TKBPACTL00) to its initial value (0000H).

In forced output stop function control register 1 (TKBPACTL01), only bit 4 (TKBPAHZS010) can be used. Be sure to set the other bits in this register to their initial value (0).

In forced output stop function control register 2 (TKBPACTL02), only bit 1 (TKBPACE01) can be used. Be sure to set bit 0 (TKBPACE00) to its initial value (0).

In the forced output stop function flag register (TKBPAFLG0), only bit 6 (TKBPAHSF01) can be used.

Do not use the other bits.

The forced output stop function 1 start register (TKBPAHFS0) cannot be used. Be sure to set this register to its initial value (00H).

In the forced output stop function 1 stop register (TKBPAHFT0), only bit 1 (TKBPAHTT01) can be used. Be sure to set bit 0 (TKBPAHTT00) to its initial value (0).

CHAPTER 8 REAL-TIME CLOCK 2

8.1 Functions of Real-time Clock 2

Real-time clock 2 (RTC2) has the following functions.

- Counters of year, month, day of the week, date, hour, minute, and second, that can count up to 99 years (with leap year correction function)
- Constant-period interrupt function (period: 0.5 seconds, 1 second, 1 minute, 1 hour, 1 day, 1 month)
- Alarm interrupt function (alarm: day of the week, hour, and minute)
- Pin output function of 1 Hz

The real-time clock 2 interrupt signal (INTRTC) can be utilized for wakeup from STOP mode and triggering an A/D converter's SNOOZE mode.

Caution The year, month, week, day, hour, minute and second can only be counted when a subsystem clock (f_{SUB} = 32.768 kHz) is selected as the operation clock of real-time clock 2.
When the low-speed oscillation clock (f_{IL} = 15 kHz) is selected, only the constant-period interrupt function is available.
However, the constant-period interrupt interval when f_{IL} is selected will be calculated with the constant-period (the value selected with RTCC0 register) × f_{SUB}/f_{IL}.

8.2 Configuration of Real-time Clock 2

Real-time clock 2 includes the following hardware.

Table 8-1. Configuration of Real-time Clock 2

Item	Configuration
Counter	Counter (16-bit)
Control registers	Peripheral enable register 0 (PER0)
	Subsystem clock supply mode control register (OSMC)
	Power-on-reset status register (PORSR)
	Real-time clock control register 0 (RTCC0)
	Real-time clock control register 1 (RTCC1)
	Second count register (SEC)
	Minute count register (MIN)
	Hour count register (HOUR)
	Day count register (DAY)
	Week count register (WEEK)
	Month count register (MONTH)
	Year count register (YEAR)
	Watch error correction register (SUBCUD)
	Alarm minute register (ALARMWM)
	Alarm hour register (ALARMWH)
	Alarm week register (ALARMWW)

Figure 8-1 shows the real-time clock 2 diagram.

Figure 8-1. Real-time Clock 2 Diagram

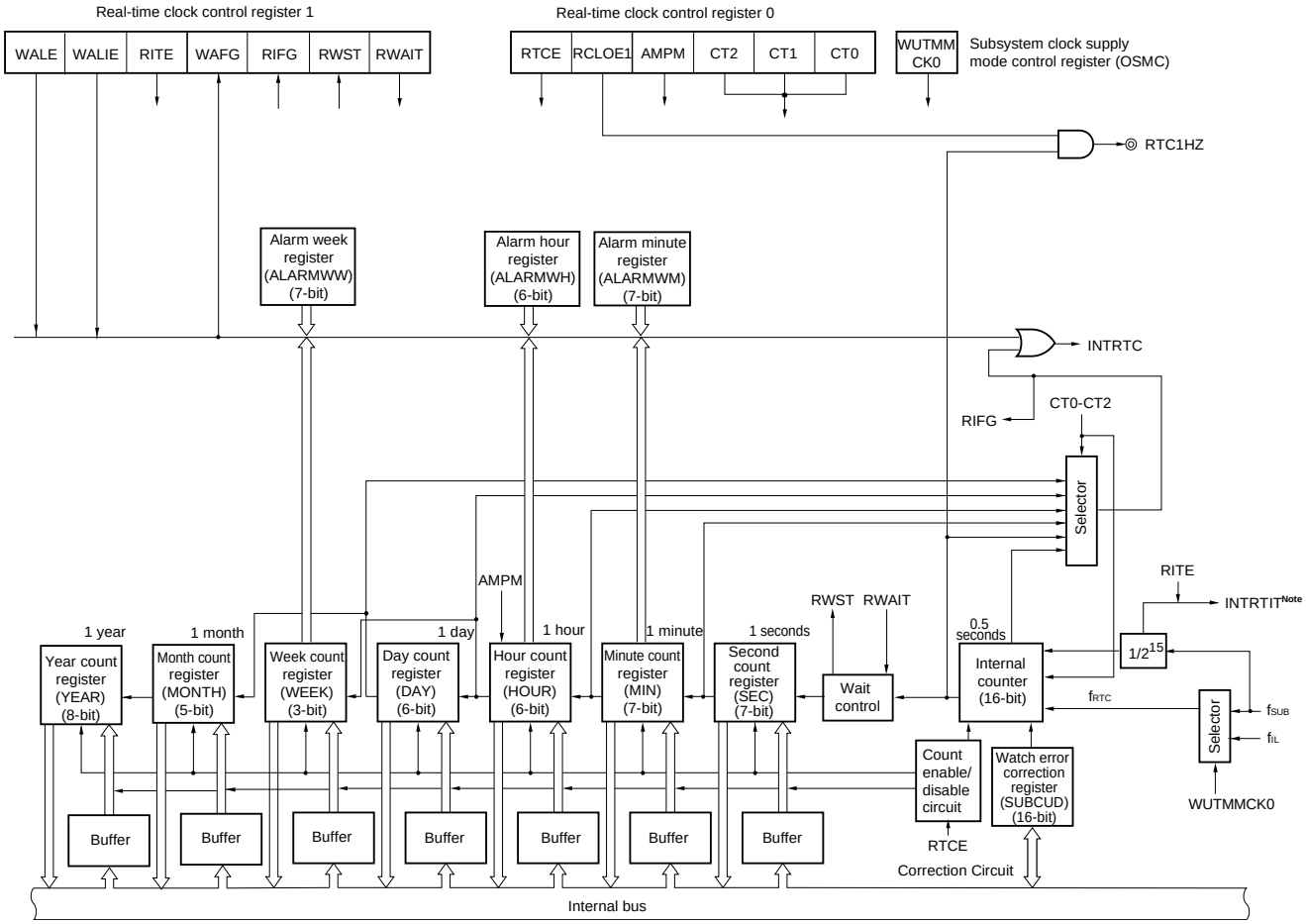

Note An interrupt that indicates the timing to get the correction value from the clock error correction register (SUBCUD). The fetch timing is 1 second (f_{SUB} base) interval.

8.3 Registers Controlling Real-time Clock 2

Real-time clock 2 is controlled by the following registers.

- Peripheral enable register 0 (PER0)
- Subsystem clock supply mode control register (OSMC)
- Power-on-reset status register(PORSR)
- Real-time clock control register 0 (RTCC0)
- Real-time clock control register 1 (RTCC1)
- Second count register (SEC)
- Minute count register (MIN)
- Hour count register (HOUR)
- Day count register (DAY)
- Week count register (WEEK)
- Month count register (MONTH)
- Year count register (YEAR)
- Watch error correction register (SUBCUD)
- Alarm minute register (ALARMWM)
- Alarm hour register (ALARMWH)
- Alarm week register (ALARMWW)
- Port mode register 3 (PM3)
- Port register 3 (P3)

The following shows the register states depending on reset sources.

Reset Source	System Registers[Note 1]	Calendar Registers[Note 2]
POR	Reset	Not reset
External reset	Retained	Retained
WDT	Retained	Retained
TRAP	Retained	Retained
LVD	Retained	Retained
Other internal reset	Retained	Retained

Notes 1. RTCC0, RTCC1, and SUBCUD

2. SEC, MIN, HOUR, DAY, WEEK, MONTH, YEAR, ALARMWM, ALARMWH, ALARMWW, (counter)

Reset generation does not reset the SEC, MIN, HOUR, DAY, WEEK, MONTH, YEAR, ALARMWM, ALARMWH, or ALARMWW registers. Initialize all the registers after power on.

8.3.1 Peripheral enable register 0 (PER0)

This register is used to enable or disable supplying the clock to the peripheral hardware. Clock supply to a hardware macro that is not used is stopped in order to reduce the power consumption and noise.

When the real-time clock 2 registers are manipulated, be sure to set bit 7 (RTCWEN) of this register to 1.

The PER0 register can be set by a 1-bit or 8-bit memory manipulation instruction.

Reset signal generation clears this register to 00H.

Figure 8-2. Format of Peripheral Enable Register 0 (PER0)

Address: F00F0H After reset: 00H R/W

Symbol	<7>	6	<5>	<4>	<3>	<2>	1	<0>
PER0	RTCWEN	0	ADCEN	IICA0EN	SAU1EN	SAU0EN	0	TAU0EN

RTCWEN	Control of internal clock supply to real-time clock 2
0	Stops input clock supply. ● SFR used by real-time clock 2 cannot be written. ● Real-time clock 2 can operate.
1	Enables input clock supply. ● SFR used by real-time clock 2 can be read/written. ● Real-time clock 2 can operate.

Cautions 1. The clock error correction register (SUBCUD) becomes read/write enabled when RTCWEN in the peripheral enable register 0 (PER0) is set to 1.

2. When using real-time clock 2, first set the RTCWEN bit to 1 and then set the following registers, while oscillation of the count clock (f_{RTC}) is stable. If RTCWEN = 0, writing to the control registers of real-time clock 2 is ignored, and read values are the values set when RTCWEN = 1 (except for the subsystem clock supply mode control register (OSMC), power-on reset status register (PORSR), port mode register 3 (PM3), port register 3 (P3)).

- **Real-time clock control register 0 (RTCC0)**
- **Real-time clock control register 1 (RTCC1)**
- **Second count register (SEC)**
- **Minute count register (MIN)**
- **Hour count register (HOUR)**
- **Day count register (DAY)**
- **Week count register (WEEK)**
- **Month count register (MONTH)**
- **Year count register (YEAR)**
- **Watch error correction register (SUBCUD)**
- **Alarm minute register (ALARMWM)**
- **Alarm hour register (ALARMWH)**
- **Alarm week register (ALARMWW)**

3. Be sure to set bits 6 and 1 to 0.

8.3.2 Subsystem clock supply mode control register (OSMC)

This register is used to reduce power consumption by stopping unnecessary clock functions.

If the RTCLPC bit is set to 1, power consumption can be reduced, because clock supply to the peripheral functions other than real-time clock 2, 12-bit interval timer, clock output/buzzer output controller, and LCD controller/driver is stopped in STOP mode or in HALT mode while the subsystem clock is selected as the CPU clock.

In addition, the OSMC register is used to select the operation clock of real-time clock 2, 12-bit interval timer, clock output/buzzer output controller, and LCD controller/driver.

The OSMC register can be set by an 8-bit memory manipulation instruction.

Reset signal generation clears this register to 00H.

Figure 8-3. Format of Subsystem Clock Supply Mode Control Register (OSMC)

Address: F00F3H After reset: 00H R/W

Symbol	7	6	5	4	3	2	1	0
OSMC	RTCLPC	0	0	WUTMMCK0	0	0	0	0

RTCLPC	In STOP mode and in HALT mode while the CPU operates using the subsystem clock
0	Enables subsystem clock supply to peripheral functions. For peripheral functions for which operation is enabled, see **Tables 21-1** to **21-3**.
1	Stops subsystem clock supply to peripheral functions other than real-time clock 2, 12-bit interval timer, clock output/buzzer output controller, and LCD controller/driver.

WUTMMCK0	Selection of operation clock of real-time clock 2, 12-bit interval timer, and LCD controller/driver	Selection of clock output from PCLBUZn pin of clock output/buzzer output controller
0	Subsystem clock (f_{SUB})	Selecting the subsystem clock (f_{SUB}) is enabled.
1	Low-speed on-chip oscillator clock (f_{IL})	Selecting the subsystem clock (f_{SUB}) is disabled.

Cautions 1. If the subsystem clock is oscillating, be sure to select the subsystem clock (WUTMMCK0 bit = 0).

2. When WUTMMCK0 is set to 1, the low-speed on-chip oscillator clock oscillates.

3. When WUTMMCK0 is set to 1, only the constant-period interrupt function of real-time clock 2 can be used. The year, month, day of the week, day, hour, minute, and second counters and the 1 Hz output function of real-time clock 2 cannot be used.
The interval of the constant-period interrupt is calculated by constant period (value selected by using the RTCC0 register) × f_{SUB}/f_{IL}.

4. The subsystem clock and low-speed on-chip oscillator clock can only be switched by using the WUTMMCK0 bit if real-time clock 2, 12-bit interval timer, and LCD controller/driver are all stopped.

8.3.3 Power-on-reset status register (PORSR)

The PORSR register is used to check the occurrence of a power-on reset.

Writing 1 to bit 0 (PORF) of the PORSR register enables this function. Writing 0 disables this function.

Write 1 to the PORF bit in advance to enable checking of the occurrence of a power-on reset.

The PORSR register can be set by an 8-bit memory manipulation instruction.

Power-on reset signal generation clears this register to 00H.

Cautions 1. The PORSR register is reset only by a power-on reset; it retains the value when a reset caused by another factor occurs.

2. If the PORF bit is set to 1, it guarantees that no power-on reset has occurred, but it does not guarantee that the RAM value is retained.

Figure 8-4. Format of Power-on-Reset Status Register (PORSR)

Address: F00F9H After reset: 00H R/W

Symbol	7	6	5	4	3	2	1	0
PORSR	0	0	0	0	0	0	0	PORF

PORF	Checking occurrence of power-on reset
0	A value 1 has not been written, or a power-on reset has occurred.
1	No power-on reset has occurred.

8.3.4 Real-time clock control register 0 (RTCC0)

The RTCC0 register is an 8-bit register that is used to start or stop the real-time clock 2 operation, control the RTC1HZ pin, set the 12- or 24-hour system, and set the constant-period interrupt function.

RTCC0 can be set by a 1-bit or 8-bit memory manipulation instruction.

Internal reset generated by the power-on-reset circuit clears this register to 00H.

Figure 8-5. Format of Real-time Clock Control Register 0 (RTCC0) (1/2)

Address: FFF9DH After reset: 00H R/W

Symbol	<7>	6	<5>	4	3	2	1	0
RTCC0	RTCE	0	RCLOE1	0	AMPM	CT2	CT1	CT0

RTCE Note 1	Real-time clock 2 operation control
0	Stops counter operation.
1	Starts counter operation.

RCLOE1 Note 2	RTC1HZ pin output control
0	Disables output of the RTC1HZ pin (1 Hz)
1	Enables output of the RTC1HZ pin (1 Hz)
Output of 1 Hz is not output because the clock counter does not operate when RTCE = 0.	

Notes 1. When shifting to STOP mode immediately after setting RTCE to 1, use the procedure shown in **Figure 8-19 Procedure for Shifting to HALT/STOP Mode After Setting RTCE = 1**.

2. When the RCLOE1 bit is set while the clock counter operates (RTCE = 1), a glitch may be output to the 1 Hz output pin (RTC1HZ).

Caution Be sure to clear bits 4 and 6 to “0”.

Figure 8-5. Format of Real-time Clock Control Register 0 (RTCC0) (2/2)

Address: FFF9DH After reset: 00H R/W

Symbol	<7>	6	<5>	4	3	2	1	0
RTCC0	RTCE	0	RCLOE1	0	AMPM	CT2	CT1	CT0

Table 8-2. Relationship Between RTCE and RCLOE1 Settings and Status

Register Settings		Status	
RTCE	RCLOE1	Real-time clock 2	RTC1HZ pin output
0	×	Counting stopped	No output
1	0	Count operation	No output
	1	Count operation	1 Hz output

AMPM	12-/24-hour system select
0	12-hour system (a.m. and p.m. are displayed.)
1	24-hour system
When changing the value of the AMPM bit while the clock counter operates (RTCE = 1), set RWAIT (bit 0 of RTCC1) and then set the hour counter (HOUR) again. When the AMPM value is 0, the 12-hour system is displayed. When the value is 1, the 24-hour system is displayed. Table 8-3 shows the displayed time digits.	

CT2	CT1	CT0	Constant-period interrupt (INTRTC) selection
0	0	0	Does not use constant-period interrupt function.
0	0	1	Once per 0.5 s (synchronized with second count up)
0	1	0	Once per 1 s (same time as second count up)
0	1	1	Once per 1 m (second 00 of every minute)
1	0	0	Once per 1 hour (minute 00 and second 00 of every hour)
1	0	1	Once per 1 day (hour 00, minute 00, and second 00 of every day)
1	1	×	Once per 1 month (Day 1, hour 00 a.m., minute 00, and second 00 of every month)
When changing the values of the CT2 to CT0 bits while the counter operates (RTCE = 1), rewrite the values of the CT2 to CT0 bits after disabling interrupt servicing INTRTC by using the interrupt mask flag register. Furthermore, after rewriting the values of the CT2 to CT0 bits, enable interrupt servicing after clearing the RIFG and RTCIF flags.			

Caution Be sure to clear bits 4 and 6 to “0”.

Remark ×: don’t care

8.3.5 Real-time clock control register 1 (RTCC1)

The RTCC1 register is an 8-bit register that is used to control the alarm interrupt function and the wait time of the counter.

RTCC1 can be set by a 1-bit or 8-bit memory manipulation instruction.

Internal reset generated by the power-on-reset circuit clears this register to 00H.

Figure 8-6. Format of Real-time Clock Control Register 1 (RTCC1) (1/3)

Address: FFF9EH After reset: 00H R/W

Symbol	<7>	<6>	<5>	<4>	<3>	2	<1>	<0>
RTCC1	WALE	WALIE	RITE	WAFG	RIFG	0	RWST	RWAIT

WALE	Alarm operation control
0	Match operation is invalid.
1	Match operation is valid.
When setting a value to the WALE bit while the counter operates (RTCE = 1) and WALIE = 1, rewrite the WALE bit after disabling interrupt servicing INTRTC by using the interrupt mask flag register. Furthermore, clear the WAFG and RTCIF flags after rewriting the WALE bit. When setting each alarm register (WALIE flag of real-time clock control register 1 (RTCC1), the alarm minute register (ALARMWM), the alarm hour register (ALARMWH), and the alarm week register (ALARMWW)), set match operation to be invalid (“0”) for the WALE bit.	

WALIE	Control of alarm interrupt (INTRTC) function operation
0	Does not generate interrupt on matching of alarm.
1	Generates interrupt on matching of alarm.

Caution If writing is performed to RTCC1 with a 1-bit manipulation instruction, the RIFG and WAFG flags may be cleared. Therefore, to perform writing to RTCC1, be sure to use an 8-bit manipulation instruction.

To prevent the RIFG and WAFG flags from being cleared during writing, set the corresponding bit to 1 (to disable writing). If the RIFG and WAFG flags are not used and the value may be changed, RTCC1 may be written by using a 1-bit manipulation instruction.

Figure 8-6. Format of Real-time Clock Control Register 1 (RTCC1) (2/3)

Address: FFF9EH After reset: 00H R/W

Symbol	<7>	<6>	<5>	<4>	<3>	2	<1>	<0>
RTCC1	WALE	WALIE	RITE	WAFG	RIFG	0	RWST	RWAIT

RITE	Control of correction timing signal interrupt (INTRTIT) function operation
0	Does not generate interrupt of correction timing signal.
1	Generates interrupt of correction timing signal.

WAFG	Alarm detection status flag
0	Alarm mismatch
1	Detection of matching of alarm
This is a status flag that indicates detection of matching with the alarm. It is valid only when WALE = 1 and is set to “1” one clock (32.768 kHz) after matching of the alarm is detected. This flag is cleared when “0” is written to it. Writing “1” to it is invalid.	

RIFG	Constant-period interrupt status flag
0	Constant-period interrupt is not generated.
1	Constant-period interrupt is generated.
This flag indicates the status of generation of the constant-period interrupt. When the constant-period interrupt is generated, it is set to “1”. This flag is cleared when “0” is written to it. Writing 1 to it is invalid.	

Caution If writing is performed to RTCC1 with a 1-bit manipulation instruction, the RIFG and WAFG flags may be cleared. Therefore, to perform writing to RTCC1, be sure to use an 8-bit manipulation instruction.
To prevent the RIFG and WAFG flags from being cleared during writing, set the corresponding bit to 1 (to disable writing). If the RIFG and WAFG flags are not used and the value may be changed, RTCC1 may be written by using a 1-bit manipulation instruction.

Figure 8-6. Format of Real-time Clock Control Register 1 (RTCC1) (3/3)

Address: FFF9EH After reset: 00H R/W

Symbol	<7>	<6>	<5>	<4>	<3>	2	<1>	<0>
RTCC1	WALE	WALIE	RITE	WAFG	RIFG	0	RWST	RWAIT

RWST	Wait status flag of real-time clock 2
0	Counter is operating.
1	Mode to read or write counter value.
This status flag indicates whether the setting of the RWAIT bit is valid. Before reading or writing the counter value, confirm that the value of this flag is 1. Even if the RWAIT bit is set to 0, the RWST bit is not set to 0 while writing to the counter. After writing is completed, the RWST bit is set to 0.	

<R>

RWAIT	Wait control of real-time clock 2
0	Sets counter operation.
1	Stops SEC to YEAR counters. Mode to read or write counter value.
This bit controls the operation of the counter. Be sure to write “1” to it to read or write the counter value. As the counter (16-bit) is continuing to run, complete reading or writing within one second and turn back to 0. When reading or writing to the counter is required while generation of the alarm interrupt is enabled, first set the CT2 to CT0 bits to 010B (generating the constant-period interrupt once per 1 second). Then, complete the processing from setting the RWAIT bit to 1 to setting it to 0 before generation of the next constant-period interrupt. When RWAIT = 1, it takes up to one cycle of f_{RTC} until the counter value can be read or written (RWST = 1).[Notes1, 2] When the internal counter (16-bit) overflowed while RWAIT = 1, it keeps the event of overflow until RWAIT = 0, then counts up. However, when it wrote a value to second count register, it will not keep the overflow event.	

Notes 1. When setting RWAIT=1 during 1 operating clock (f_{RTC}), after setting RTCE=1, it may take two clock time of the operation clock (f_{RTC}), until RWST bit is set to "1".

2. When setting RWAIT=1 during 1 operating clock (f_{RTC}), after returning from a stand-by (HALT mode, STOP mode and SNOOZE mode), it may take two clock time of the operation clock (f_{RTC}), until RWST bit is set to "1".

Caution If writing is performed to RTCC1 with a 1-bit manipulation instruction, the RIFG and WAFG flags may be cleared. Therefore, to perform writing to RTCC1, be sure to use an 8-bit manipulation instruction.

To prevent the RIFG and WAFG flags from being cleared during writing, set the corresponding bit to 1 (to disable writing). If the RIFG and WAFG flags are not used and the value may be changed, RTCC1 may be written by using a 1-bit manipulation instruction.

Remarks 1. Constant-period interrupts and alarm match interrupts use the same interrupt source (INTRTC). When using these two types of interrupts at the same time, which interrupt occurred can be judged by checking the constant-period interrupt status flag (RIFG) and the alarm detection status flag (WAFG) upon INTRTC occurrence.

2. The internal counter (16 bits) is cleared when the second count register (SEC) is written.

8.3.6 Second count register (SEC)

The SEC register is an 8-bit register that takes a value of 0 to 59 (decimal) and indicates the count value of seconds.

It is a decimal counter that counts up when the counter (16-bit) overflows.

When data is written to this register, it is written to a buffer and then to the counter up to 2 clocks of f_{RTC} later.

Set a decimal value of 00 to 59 to this register in BCD code.

The SEC register can be set by an 8-bit memory manipulation instruction.

Reset signal generation does not clear this register to its default value.

Figure 8-7. Format of Second Count Register (SEC)

Address: FFF92H After reset: Undefined R/W

Symbol	7	6	5	4	3	2	1	0
SEC	0	SEC40	SEC20	SEC10	SEC8	SEC4	SEC2	SEC1

Caution When reading or writing to SEC while the clock counter operates (RTCE = 1), be sure to use the flows shown in 8.4.3 Reading real-time clock 2 counter and 8.4.4 Writing to real-time clock 2 counter.

Remark The internal counter (16 bits) is cleared when the second count register (SEC) is written.

8.3.7 Minute count register (MIN)

The MIN register is an 8-bit register that takes a value of 0 to 59 (decimal) and indicates the count value of minutes.

It is a decimal counter that counts up when the second counter overflows.

When data is written to this register, it is written to a buffer and then to the counter up to 2 clocks of f_{RTC} later. Even if the second count register overflows while this register is being written, this register ignores the overflow and is set to the value written. Set a decimal value of 00 to 59 to this register in BCD code.

The MIN register can be set by an 8-bit memory manipulation instruction.

Reset signal generation does not clear this register to its default value.

Figure 8-8. Format of Minute Count Register (MIN)

Address: FFF93H After reset: Undefined R/W

Symbol	7	6	5	4	3	2	1	0
MIN	0	MIN40	MIN20	MIN10	MIN8	MIN4	MIN2	MIN1

Caution When reading or writing to MIN while the clock counter operates (RTCE = 1), be sure to use the flows shown in 8.4.3 Reading real-time clock 2 counter and 8.4.4 Writing to real-time clock 2 counter.

8.3.8 Hour count register (HOUR)

The HOUR register is an 8-bit register that takes a value of 00 to 23 or 01 to 12 and 21 to 32 (decimal) and indicates the count value of hours.

It is a decimal counter that counts up when the minute counter overflows.

When data is written to this register, it is written to a buffer and then to the counter up to 2 clocks of f_{RTC} later. Even if the minute count register overflows while this register is being written, this register ignores the overflow and is set to the value written. Specify a decimal value of 00 to 23, 01 to 12, or 21 to 32 by using BCD code according to the time system specified using bit 3 (AMPM) of real-time clock control register 0 (RTCC0).

If the AMPM bit value is changed, the values of the HOUR register change according to the specified time system.

The HOUR register can be set by an 8-bit memory manipulation instruction.

Reset signal generation does not clear this register to its default value.

Figure 8-9. Format of Hour Count Register (HOUR)

Address: FFF94H After reset: Undefined R/W

Symbol	7	6	5	4	3	2	1	0
HOUR	0	0	HOUR20	HOUR10	HOUR8	HOUR4	HOUR2	HOUR1

Cautions 1. Bit 5 (HOUR20) of the HOUR register indicates AM(0)/PM(1) if AMPM = 0 (if the 12-hour system is selected).

2. When reading or writing to HOUR while the clock counter operates (RTCE = 1), be sure to use the flows shown in 8.4.3 Reading real-time clock 2 counter and 8.4.4 Writing to real-time clock 2 counter.

Table 8-3 shows the relationship between the setting value of the AMPM bit, the hour count register (HOUR) value, and time.

Table 8-3. Displayed Time Digits

24-Hour Display (AMPM = 1)		12-Hour Display (AMPM = 1)	
Time	HOUR Register	Time	HOUR Register
0	00H	12 a.m.	12H
1	01H	1 a.m.	01H
2	02H	2 a.m.	02H
3	03H	3 a.m.	03H
4	04H	4 a.m.	04H
5	05H	5 a.m.	05H
6	06H	6 a.m.	06H
7	07H	7 a.m.	07H
8	08H	8 a.m.	08H
9	09H	9 a.m.	09H
10	10H	10 a.m.	10H
11	11H	11 a.m.	11H
12	12H	12 p.m.	32H
13	13H	1 p.m.	21H
14	14H	2 p.m.	22H
15	15H	3 p.m.	23H
16	16H	4 p.m.	24H
17	17H	5 p.m.	25H
18	18H	6 p.m.	26H
19	19H	7 p.m.	27H
20	20H	8 p.m.	28H
21	21H	9 p.m.	29H
22	22H	10 p.m.	30H
23	23H	11 p.m.	31H

The HOUR register value is set to 12-hour display when the AMPM bit is “0” and to 24-hour display when the AMPM bit is “1”.

In 12-hour display, the fifth bit of the HOUR register displays 0 for AM and 1 for PM.

8.3.9 Date count register (DAY)

The DAY register is an 8-bit register that takes a value of 1 to 31 (decimal) and indicates the count value of days.

It is a decimal counter that count ups when the hour counter overflows.

This counter counts as follows.

[DAY count values]

- 01 to 31 (January, March, May, July, August, October, December)
- 01 to 30 (April, June, September, November)
- 01 to 29 (February, leap year)
- 01 to 28 (February, normal year)

When data is written to this register, it is written to a buffer and then to the counter up to 2 clocks of f_{RTC} later. Even if the hour count register overflows while this register is being written, this register ignores the overflow and is set to the value written. Set a decimal value of 01 to 31 to this register in BCD code.

The DAY register can be set by an 8-bit memory manipulation instruction.

Reset signal generation does not clear this register to its default value.

Figure 8-10. Format of Day-of-week Count Register (DAY)

Address: FFF96H After reset: Undefined R/W

Symbol	7	6	5	4	3	2	1	0
DAY	0	0	DAY20	DAY10	DAY8	DAY4	DAY2	DAY1

Caution When reading or writing to DAY while the clock counter operates (RTCE = 1), be sure to use the flows shown in 8.4.3 Reading real-time clock 2 counter and 8.4.4 Writing to real-time clock 2 counter.

8.3.10 Day-of-week count register (WEEK)

The WEEK register is an 8-bit register that takes a value of 0 to 6 (decimal) and indicates the count value of weekdays.

It is a decimal counter that counts up when a carry to the date counter occurs.

When data is written to this register, it is written to a buffer and then to the counter up to 2 clocks of f_{RTC} later.

Set a decimal value of 00 to 06 to this register in BCD code.

The WEEK register can be set by an 8-bit memory manipulation instruction.

Reset signal generation does not clear this register to its default value.

Figure 8-11. Format of Date Count Register (WEEK)

Address: FFF95H After reset: Undefined R/W

Symbol	7	6	5	4	3	2	1	0
WEEK	0	0	0	0	0	WEEK4	WEEK2	WEEK1

Cautions 1. The value corresponding to the month count register (MONTH) or the day count register (DAY) is not stored in the week count register (WEEK) automatically. After reset release, set the week count register as follow.

Day	WEEK
Sunday	00H
Monday	01H
Tuesday	02H
Wednesday	03H
Thursday	04H
Friday	05H
Saturday	06H

2. When reading or writing to WEEK while the clock counter operates (RTCE = 1), be sure to use the flows shown in 8.4.3 Reading real-time clock 2 counter and 8.4.4 Writing to real-time clock 2 counter.

8.3.11 Month count register (MONTH)

The MONTH register is an 8-bit register that takes a value of 1 to 12 (decimal) and indicates the count value of months.

It is a decimal counter that count ups when the date counter overflows.

When data is written to this register, it is written to a buffer and then to the counter up to 2 clocks of f_{RTC} later. Even if the day count register overflows while this register is being written, this register ignores the overflow and is set to the value written. Set a decimal value of 01 to 12 to this register in BCD code.

The MONTH register can be set by an 8-bit memory manipulation instruction.

Reset signal generation does not clear this register to its default value.

Figure 8-12. Format of Month Count Register (MONTH)

Address: FFF97H After reset: Undefined R/W

Symbol	7	6	5	4	3	2	1	0
MONTH	0	0	0	MONTH10	MONTH8	MONTH4	MONTH2	MONTH1

Caution When reading or writing to MONTH while the clock counter operates (RTCE = 1), be sure to use the flows shown in 8.4.3 Reading real-time clock 2 counter and 8.4.4 Writing to real-time clock 2 counter.

8.3.12 Year count register (YEAR)

The YEAR register is an 8-bit register that takes a value of 0 to 99 (decimal) and indicates the count value of years.

It is a decimal counter that counts up when the month count register (MONTH) overflows.

Values 00, 04, 08, …, 92, and 96 indicate a leap year.

When data is written to this register, it is written to a buffer and then to the counter up to 2 clocks of f_{RTC} later. Even if the MONTH register overflows while this register is being written, this register ignores the overflow and is set to the value written. Set a decimal value of 00 to 99 to this register in BCD code.

The YEAR register can be set by an 8-bit memory manipulation instruction.

Reset signal generation does not clear this register to its default value.

Figure 8-13. Format of Year Count Register (YEAR)

Address: FFF98H After reset: Undefined R/W

Symbol	7	6	5	4	3	2	1	0
YEAR	YEAR80	YEAR40	YEAR20	YEAR10	YEAR8	YEAR4	YEAR2	YEAR1

Caution When reading or writing to YEAR while the clock counter operates (RTCE = 1), be sure to use the flows shown in 8.4.3 Reading real-time clock 2 counter and 8.4.4 Writing to real-time clock 2 counter.

8.3.13 Clock error correction register (SUBCUD)

This register is used to correct the clock with a minimum resolution and accuracy of 0.96 ppm when it is slow or fast by changing the counter value every second.

F8 to F0 of SUBCUD are 9-bit fixed-point (two's complement) register. For details, see **Table 8-5 Clock Error Correction Values**.

The SUBCUD register can be set by a 16-bit memory manipulation instruction.

Internal reset generated by the power-on-reset circuit clears this register to 0020H.

Figure 8-14. Format of Clock Error Correction Register (SUBCUD)

Address: F0310H After reset: 0020H R/W

Symbol	15	14	13	12	11	10	9	8	7	6	5	4	3	2	1	0
SUBCUD	F15	0	0	0	0	0	0	F8	F7	F6	F5	F4	F3	F2	F1	F0

F15	Clock error correction enable
0	Stops clock error correction.
1	Enables clock error correction.

The range of value that can be corrected by using the clock error correction register (SUBCUD) is shown in Table 8-4.

Table 8-4. Correctable Range of Crystal Resonator Oscillation Frequency Deviation

Item	Value
Correctable range	–274.6 ppm to +212.6 ppm
Maximum quantization error	±0.48 ppm
Minimum resolution	0.96 ppm

Table 8-5. Clock Error Correction Values

SUBCUD										Target Correction Values
F15	F8	F7	F6	F5	F4	F3	F2	F1	F0	
1	1	0	0	0	0	0	0	0	0	–274.6 ppm
	1	0	0	0	0	0	0	0	1	–273.7 ppm
	1	0	0	0	0	0	0	1	0	–272.7 ppm
	• • •	• • •	• • •	• • •	• • •	• • •	• • •	• • •	• • •	• • •
	1	1	1	1	1	1	1	0	1	–33.3 ppm
	1	1	1	1	1	1	1	1	0	–32.4 ppm
	1	1	1	1	1	1	1	1	1	–31.4 ppm
	0	0	0	0	0	0	0	0	0	–30.5 ppm
	0	0	0	0	0	0	0	0	1	–29.6 ppm
	0	0	0	0	0	0	0	1	0	–28.6 ppm
	• • •	• • •	• • •	• • •	• • •	• • •	• • •	• • •	• • •	• • •
	0	0	0	0	1	1	1	1	1	–0.95 ppm
	0	0	0	1	0	0	0	0	0	0 ppm
	0	0	0	1	0	0	0	0	1	0.95 ppm
	• • •	• • •	• • •	• • •	• • •	• • •	• • •	• • •	• • •	• • •
	0	1	1	1	1	1	1	0	1	210.7 ppm
	0	1	1	1	1	1	1	1	0	211.7 ppm
	0	1	1	1	1	1	1	1	1	212.6 ppm
0	×	×	×	×	×	×	×	×	×	Clock error correction stopped

The F8 to F0 value of the SUBCUD register is calculated from the target correction value by using the following expression.

$$\text{SUBCUD[8:0]} = \left(\frac{\text{Target correction value [ppm]} \times 2^{15}}{10^6} \right)_{\substack{\text{2's complement} \\ \text{(9 bit fixed-point} \\ \text{format)}}} + 0001.00000\text{B}$$

Caution The target correction value is the oscillation frequency deviation (unit: [ppm]) of the crystal resonator. For calculating the correction value, see 8.4.8 Example of watch error correction of real-time clock 2.

Examples 1. When target correction value = 18.3 [ppm]

$$\begin{aligned}\text{SUBCUD[8:0]} &= (18.3 \times 2^{15} / 10^6)_{\text{2's complement (9 bit fixed-point format)}} + 0001.00000\text{B} \\ &= (0.59375)_{\text{2's complement (9 bit fixed-point format)}} + 0001.00000\text{B} \\ &= 0000.10011\text{B} + 0001.00000\text{B} \\ &= 0001.10011\text{B}\end{aligned}$$

Examples 2. When target correction value = –18.3 [ppm]

SUBCUD[8:0] = $(-18.3 \times 2^{15} / 10^{6})_{\text{2's complement (9 bit fixed-point format)}}$ + 0001.00000B

= $(-0.59965)_{\text{2's complement (9 bit fixed-point format)}}$ + 0001.00000B

= 1111.01101B + 0001.00000B

= 0000.01101B

8.3.14 Alarm minute register (ALARMWM)

This register is used to set the minute of an alarm.

The ALARMWM register can be set by an 8-bit memory manipulation instruction.

Reset signal generation does not clear this register to its default value.

Figure 8-15. Format of Alarm Minute Register (ALARMWM)

Address: FFF9AH After reset: Undefined R/W

Symbol	7	6	5	4	3	2	1	0
ALARMWM	0	WM40	WM20	WM10	WM8	WM4	WM2	WM1

Caution Set a decimal value of 00 to 59 to this register in BCD code. If a value outside the range is set, the alarm is not detected.

8.3.15 Alarm hour register (ALARMWH)

This register is used to set the hour of an alarm.

The ALARMWH register can be set by an 8-bit memory manipulation instruction.

Reset signal generation does not clear this register to its default value.

Figure 8-16. Format of Alarm Hour Register (ALARMWH)

Address: FFF9BH After reset: Undefined R/W

Symbol	7	6	5	4	3	2	1	0
ALARMWH	0	0	WH20	WH10	WH8	WH4	WH2	WH1

Cautions 1. Set a decimal value of 00 to 23 or 01 to 12 and 21 to 32 to this register in BCD code. If a value outside the range is set, the alarm is not detected.

2. Bit 5 (WH20) of the ALARMWH register indicates AM(0)/PM(1) if AMPM = 0 (if the 12-hour system is selected).

8.3.16 Alarm day-of-week register (ALARMWW)

This register is used to set the day of the week of an alarm.

The ALARMWW register can be set by an 8-bit memory manipulation instruction.

Reset signal generation does not clear this register to its default value.

Figure 8-17. Format of Alarm Day-of-Week Register (ALARMWW)

Address: FFF9CH After reset: Undefined R/W

Symbol	7	6	5	4	3	2	1	0
ALARMWW	0	WW6	WW5	WW4	WW3	WW2	WW1	WW0

Table 8-6 shows an example of setting the alarm.

Table 8-6. Setting Alarm

Time of Alarm	Day of the Week							12-Hour Display				24-Hour Display			
	Sun. WW0	Mon. WW1	Tue. WW2	Wed. WW3	Thu. WW4	Fri. WW5	Sat. WW6	Hour 10	Hour 1	Min. 10	Min. 1	Hour 10	Hour 1	Min. 10	Min. 1
Every day, 0:00 a.m.	1	1	1	1	1	1	1	1	2	0	0	0	0	0	0
Every day, 1:30 a.m.	1	1	1	1	1	1	1	0	1	3	0	0	1	3	0
Every day, 11:59 a.m.	1	1	1	1	1	1	1	1	1	5	9	1	1	5	9
Monday through Friday, 0:00 p.m.	0	1	1	1	1	1	0	3	2	0	0	1	2	0	0
Sunday, 1:30 p.m.	1	0	0	0	0	0	0	2	1	3	0	1	3	3	0
Monday, Wednesday, Friday, 11:59 p.m.	0	1	0	1	0	1	0	3	1	5	9	2	3	5	9

8.3.17 Registers controlling port functions of real-time clock 2 output pins

When using real-time clock 2, set the registers that control the port functions multiplexed on the target channel (LCD port function registers 0 to 6 (PFSEG0 to PFSEG6), port mode register (PMxx), and port register (Pxx)). For details, see **4.3.9 LCD port function registers 0 to 6 (PFSEG0 to PFSEG6)**, **4.3.1 Port mode registers (PMxx)**, and **4.3.2 Port registers (Pxx)**.

When using the ports (such as P31/RTC1HZ) to be shared with the real-time clock 2 output pins for real-time clock 2, set the LCD port function register (PFSEGx) bit, port mode register (PMxx) bit, and port register (Pxx) bit corresponding to each port to 0.

Example: When using P31/RTC1HZ for real-time clock 2 output
Set the PFSEG21 bit of LCD port function register (PFSEG2) to 0.
Set the PM31 bit of port mode register (PM3) to 0.
Set the P31 bit of port register (P3) to 0.

8.4 Real-time Clock 2 Operation

8.4.1 Starting operation of real-time clock 2

Figure 8-18. Procedure for Starting Operation of Real-time Clock 2

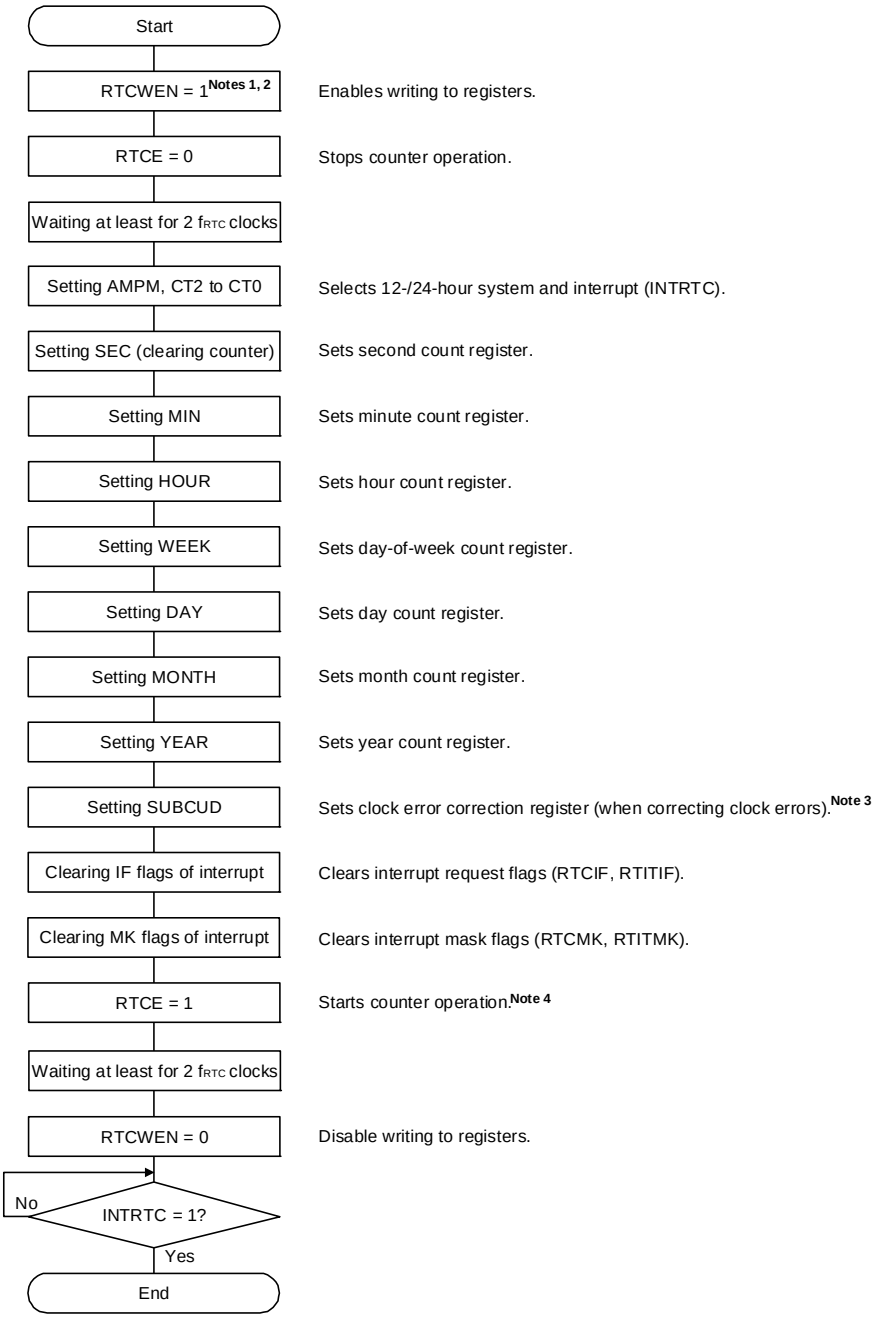

Notes 1. Set RTCWEN to 0, except when accessing the RTC register, in order to prevent error when writing to the clock counter.

2. First set the RTCWEN bit to 1, while oscillation of the count clock (f_{RTC}) is stable.

3. Set up the SUBCUD register only if the watch error must be corrected. For details about how to calculate the correction value, see **8.4.8 Example of watch error correction of real-time clock 2**.

4. Confirm the procedure described in **8.4.2 Shifting to HALT/STOP mode after starting operation** when shifting to HALT/STOP mode without waiting for INTRTC = 1 after RTCE = 1.

8.4.2 Shifting to HALT/STOP mode after starting operation

Perform one of the following processing when shifting to STOP mode immediately after setting the RTCE bit to 1.

However, after setting the RTCE bit to 1, this processing is not required when shifting to STOP mode after the first INTRTC interrupt has occurred.

(1) Shifting to HALT/STOP mode when at least two input clocks of the count clock (f_{RTC}) have elapsed after setting the RTCE bit to 1 (see Example 1 of **Figure 8-19**).

(2) Checking by polling the RWST bit to become 1, after setting the RTCE bit to 1 and then setting the RWAIT bit to 1. Afterward, setting the RWAIT bit to 0 and shifting to HALT/STOP mode after checking again by polling that the RWST bit has become 0 (see Example 2 of **Figure 8-19**).

Figure 8-19. Procedure for Shifting to HALT/STOP Mode after Setting RTCE = 1

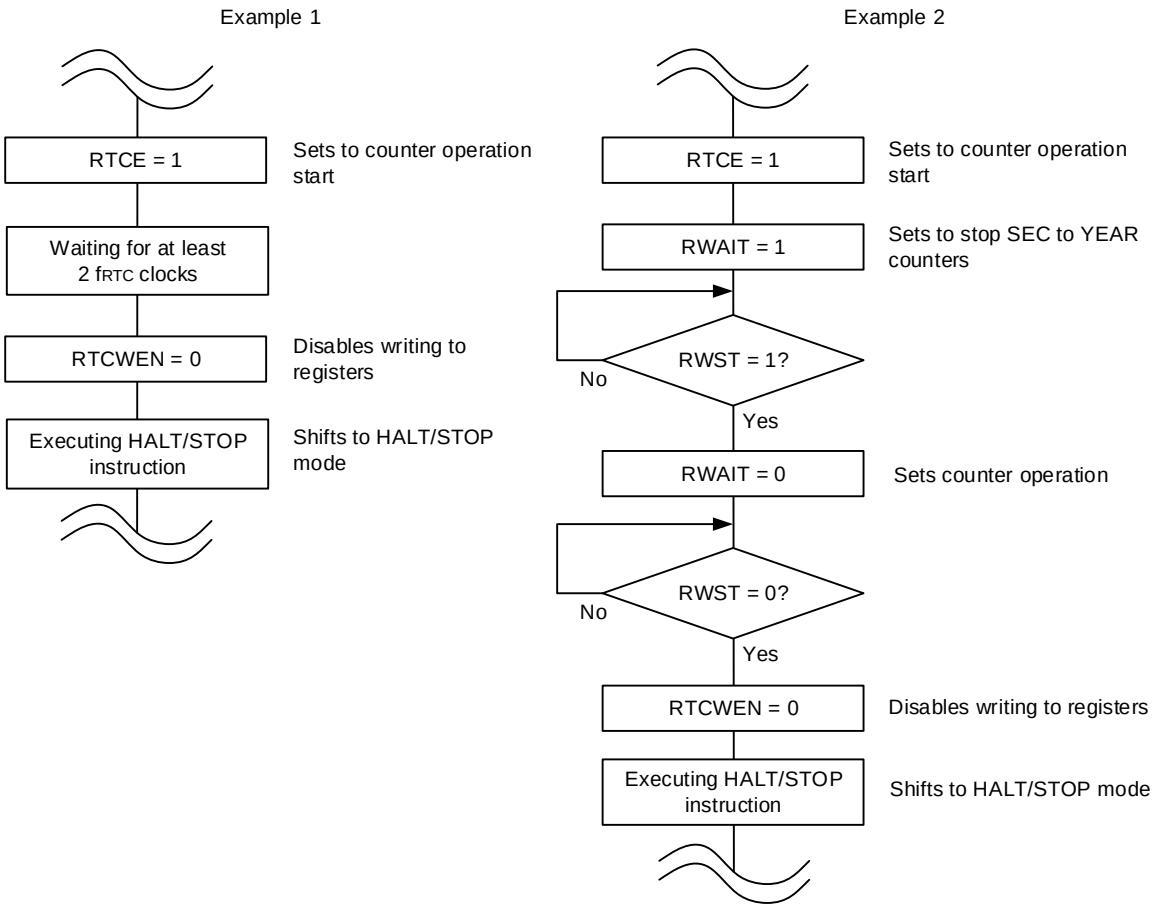

8.4.3 Reading real-time clock 2 counter

Read the counter after setting RWAIT to 1.

Set RWAIT to 0 after completion of reading the counter.

<R> When the alarm interrupt is in use, read from the counters according to the procedures shown in **Figure 8-21**.

Figure 8-20. Procedure for Reading Real-time Clock 2

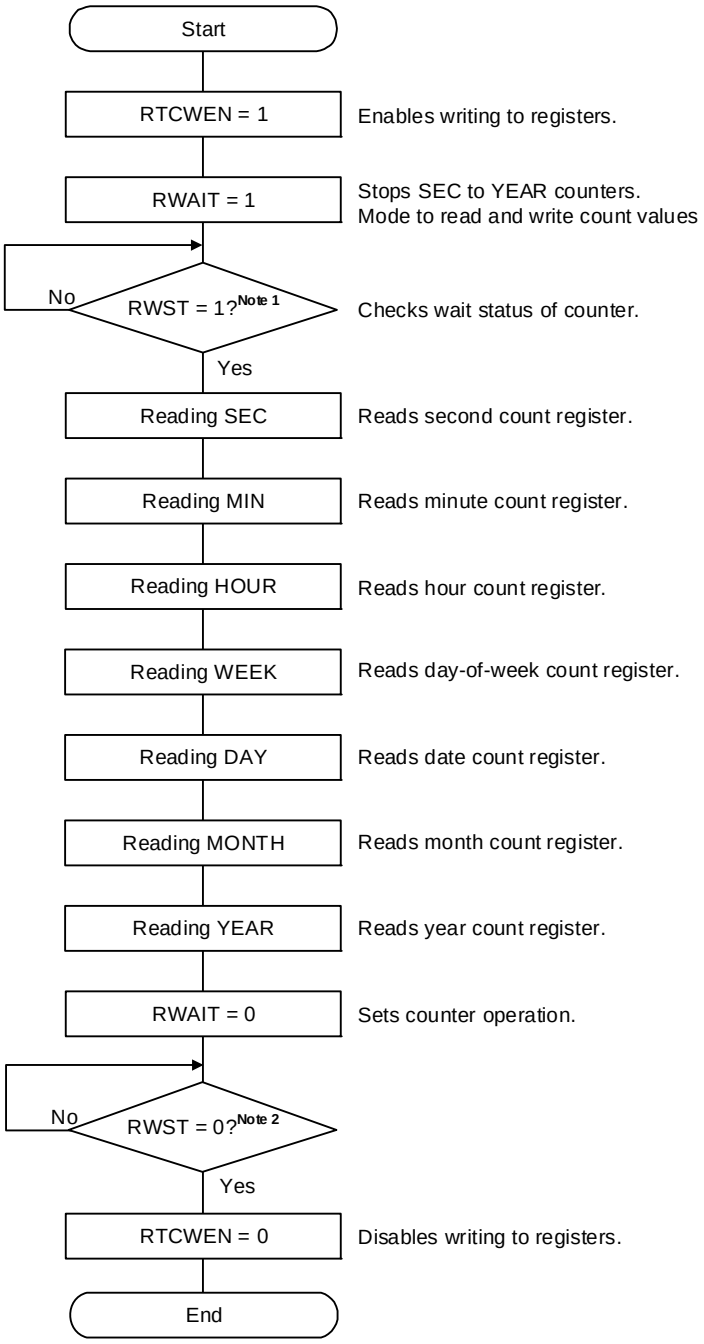

Notes 1. When the counter is stopped (RTCE = 0), RWST is not set to 1.

<R> **2.** Be sure to confirm that RWST = 0 before shifting to HALT/STOP mode.

Caution Complete setting the RWAIT bit to 1 to clearing the RWAIT bit to 0 within 1 second.

Remark SEC, MIN, HOUR, WEEK, DAY, MONTH, and YEAR may be read in any sequence. All the registers do not have to be set and only some registers may be read.

<R> **Figure 8-21. Procedure for Reading Real-time Clock 2 (When the Alarm Interrupt is in Use)**

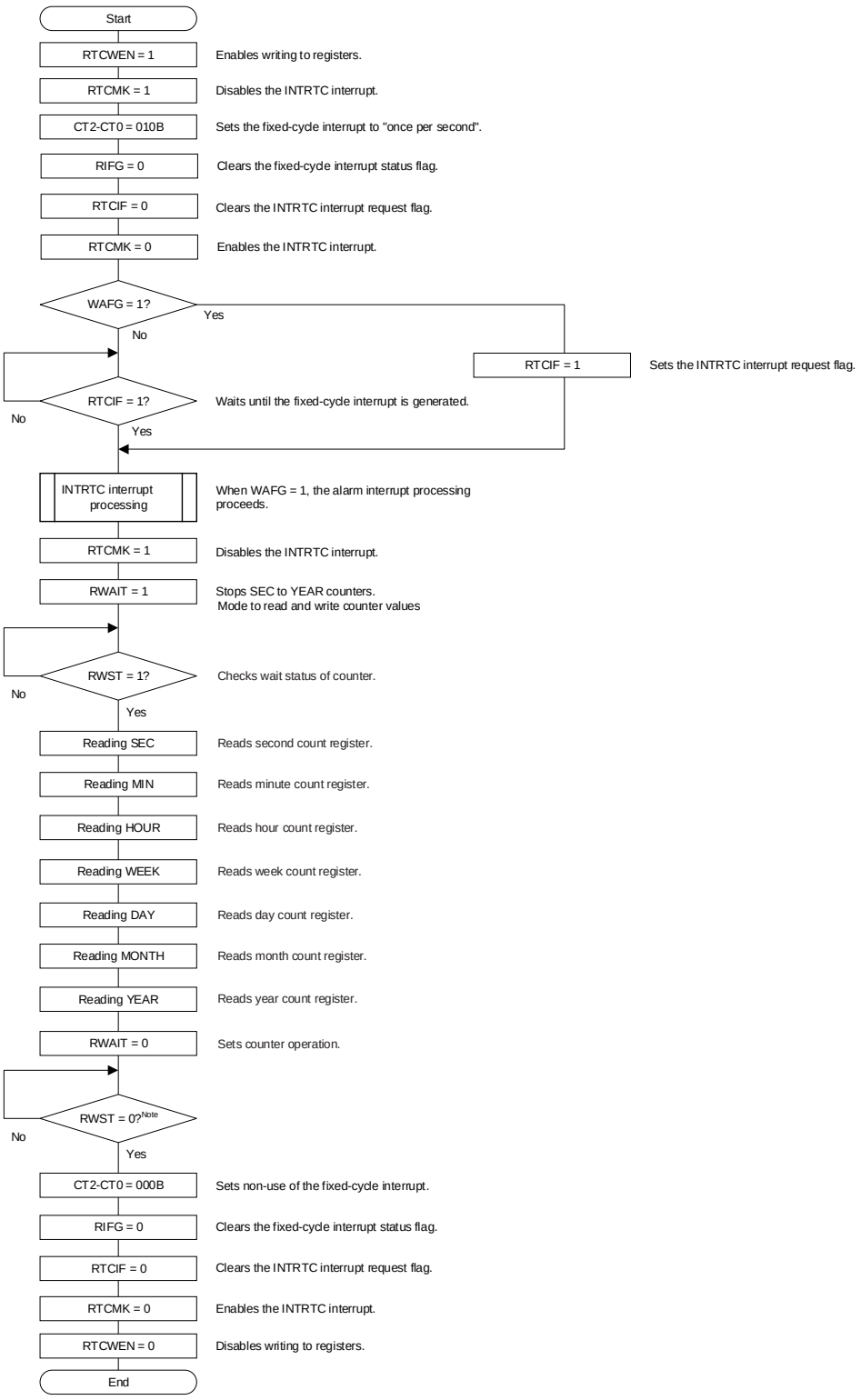

Note. Be sure to confirm that RWST = 0 before setting HALT/STOP mode.

Caution Complete the parts of the process from the start of INTRTC interrupt processing to clearing the RWAIT bit to 0 within 1 second.

Remark SEC, MIN, HOUR, WEEK, DAY, MONTH, and YEAR may be read in any sequence. All the registers do not have to be set and only some registers may be read.

8.4.4 Writing to real-time clock 2 counter

Write to the counter after setting RWAIT to 1.

Set RWAIT to 0 after completion of writing the counter.

<R> When the alarm interrupt is in use, write to the counters according to the procedures shown in **Figure 8 - 23**.

Figure 8-22. Procedure for Writing Real-time Clock 2 Counter

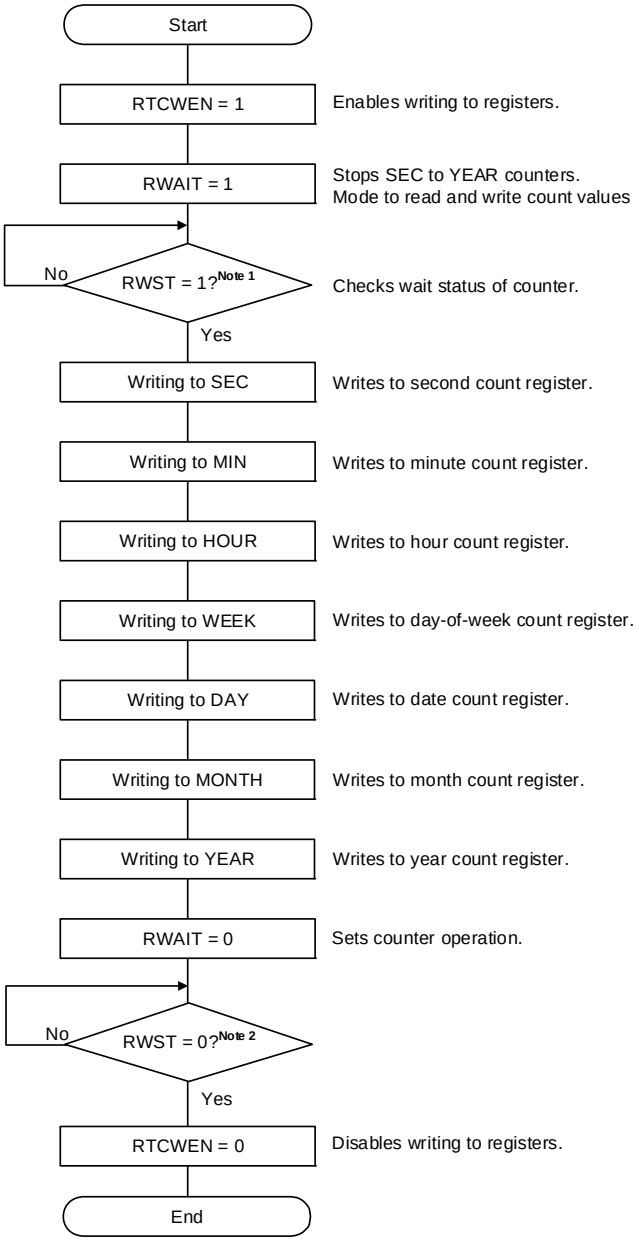

Notes 1. When the counter is stopped (RTCE = 0), RWST is not set to 1.

<R> **2.** Be sure to confirm that RWST = 0 before shifting to HALT/STOP mode.

Cautions 1. Complete setting the RWAIT bit to 1 to clearing the RWAIT bit to 0 within 1 second.

<R> **2. When changing the values of the SEC, MIN, HOUR, WEEK, DAY, MONTH, and YEAR registers while counting is in progress (RTCE = 1), rewrite the registers after disabling interrupt processing of INTRTC by using the interrupt mask flag register. Furthermore, clear the WAFG, RIFG and RTCIF flags after rewriting the register.**

<R> **Remark** SEC, MIN, HOUR, WEEK, DAY, MONTH, and YEAR may be written in any sequence. All the registers do not have to be set and only some registers may be written.

<R> **Figure 8-23. Procedure for Writing Real-time Clock 2 (When the Alarm Interrupt is in Use)**

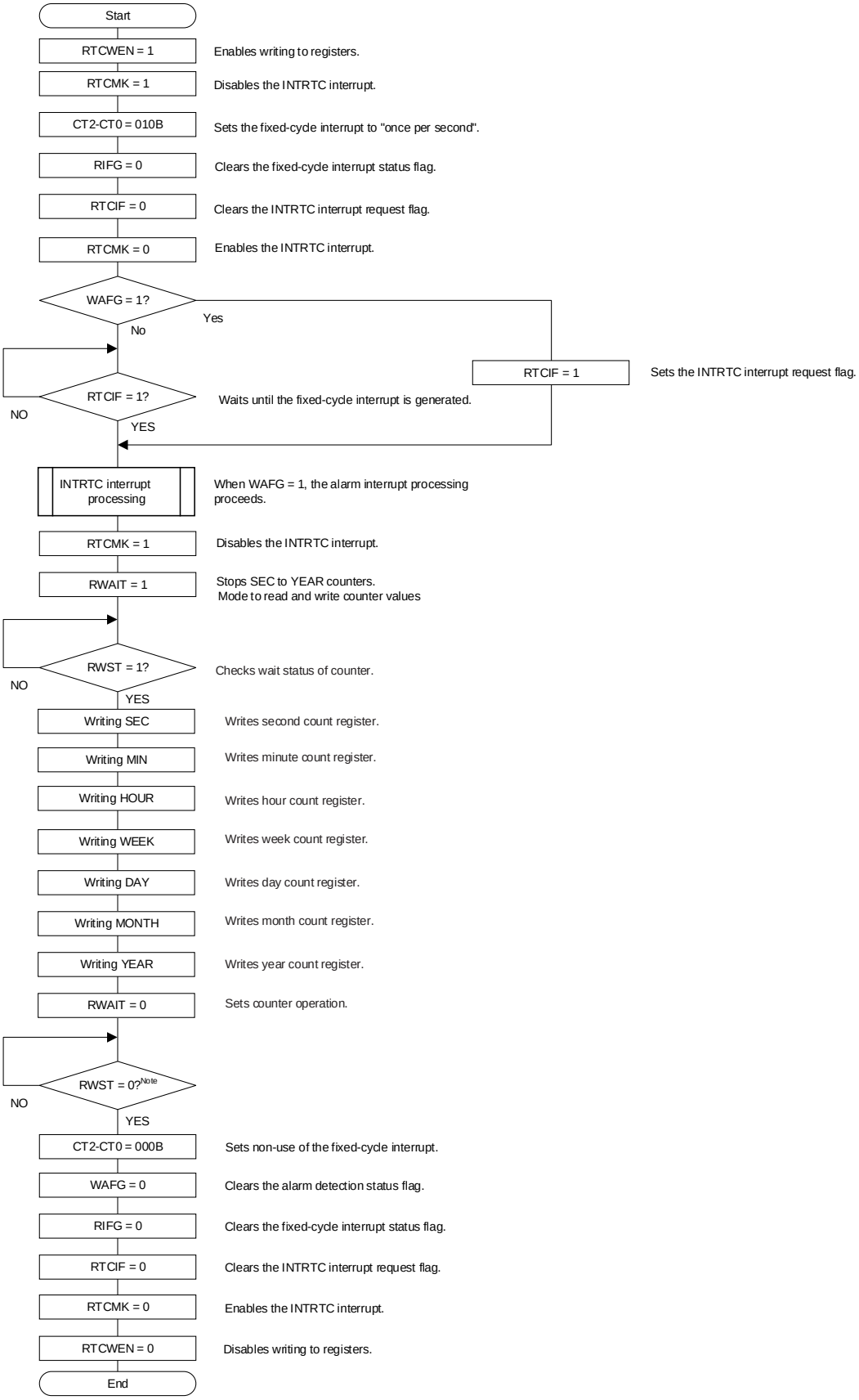

(Note, Cautions and Remark are listed on the next page.)

Note. Be sure to confirm that RWST = 0 before setting HALT\STOP mode.

Caution 1. Complete the parts of the process from the start of INTRTC interrupt processing to clearing the RWAIT bit to 0 within 1 second.

2. When changing the values of the SEC, MIN, HOUR, WEEK, DAY, MONTH, and YEAR registers while counting is in progress (RTCE = 1), rewrite the registers after disabling interrupt processing of INTRTC by using the interrupt mask flag register. Furthermore, clear the WAFG, RIFG and RTCIF flags after rewriting the registers.

Remark SEC, MIN, HOUR, WEEK, DAY, MONTH, and YEAR may be written in any sequence. All the registers do not have to be set and only some registers may be written.

8.4.5 Setting alarm of real-time clock 2

Set the alarm time after setting WALE to 0 (to disable alarm operation).

Figure 8-24. Alarm Setting Procedure

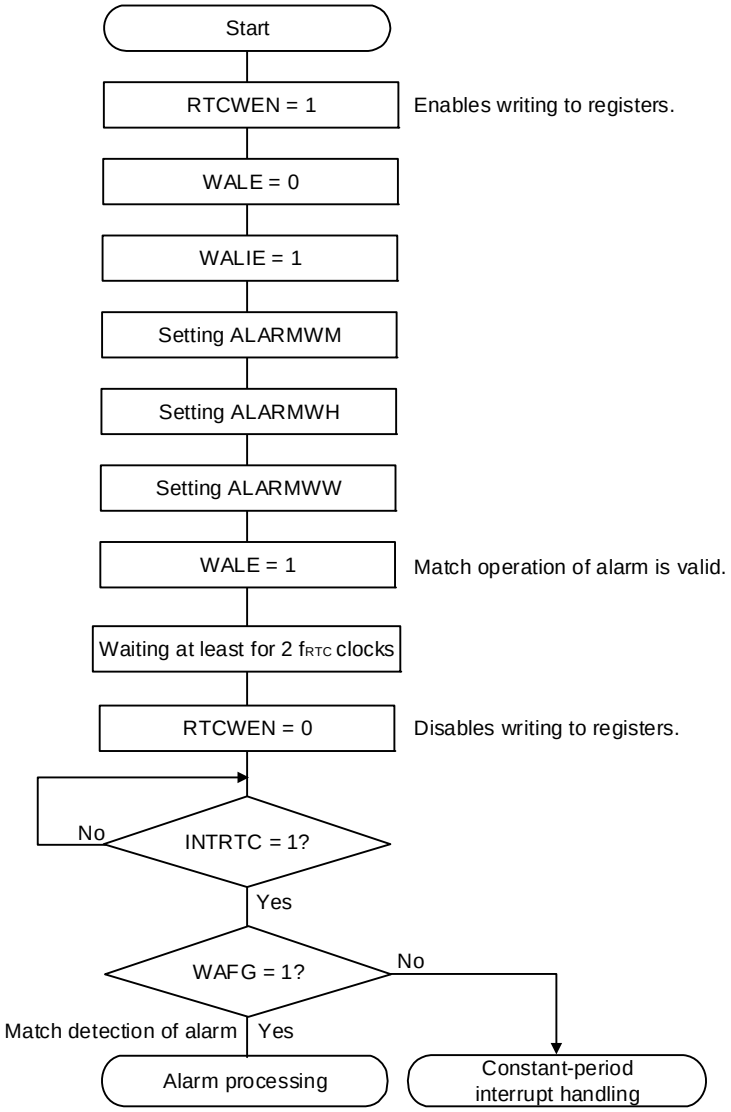

Remarks 1. ALARMWM, ALARMWH, and ALARMWW may be written in any sequence.

2. Constant-period interrupts and alarm match interrupts use the same interrupt source (INTRTC). When using these two types of interrupts at the same time, which interrupt occurred can be judged by checking the constant-period interrupt status flag (RIFG) and the alarm detection status flag (WAFG) upon INTRTC occurrence.

8.4.6 1 Hz output of real-time clock 2

Figure 8-25. 1 Hz Output Setting Procedure

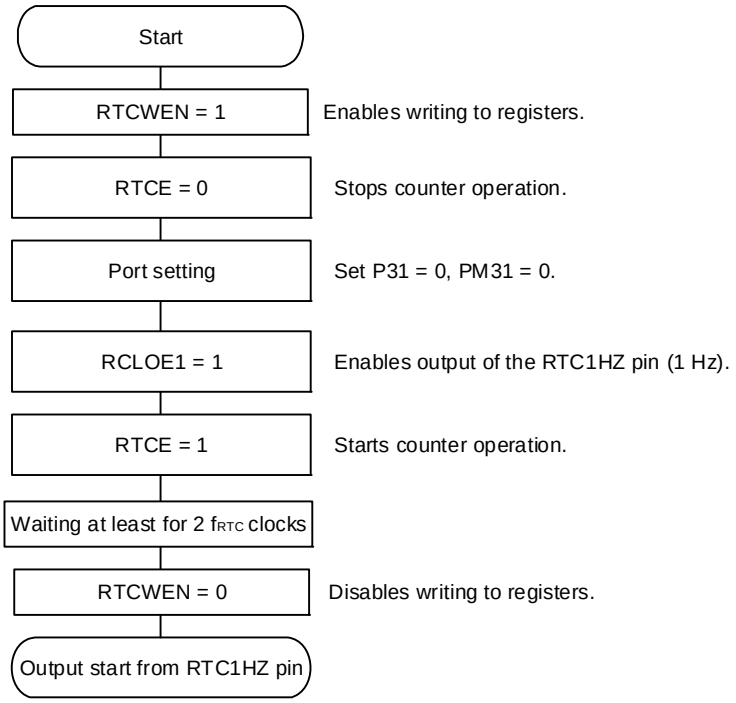

8.4.7 Clock error correction register setting procedure

RTC correction may not be successful if there is a conflict between the clock error correction register (SUBCUD) rewrite and correction timing. In order to prevent conflict between the correction timing and rewrite of the SUBCUD register, be sure to complete rewrite of the SUBCUD register before the next correction timing occurs (within approx. 0.5 seconds), which is calculated starting from the correction timing interrupt (INTRTIT) or periodic interrupt (INTRTC) that is synchronized with the correction timing.

- Set the clock error correction register after setting RTCWEN to 1. Set RTCWEN to 0 after completion of register setting.

Figure 8-26. Clock Error Correction Register Setting Procedure

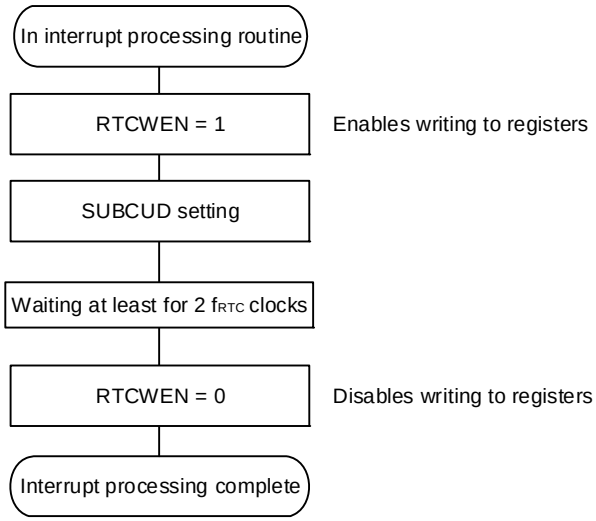

8.4.8 Example of watch error correction of real-time clock 2

The clock can be corrected every second with a minimum resolution and accuracy of 0.96 ppm when it is slow or fast, by setting a value to the clock error correction register.

The following shows how to calculate the target correction value, and how to calculate the F8 to F0 values of the clock error correction register from the target correction value.

Calculating the target correction value

(Output frequency of the RTC1HZ pin using)

[Measuring the oscillation frequency]

The oscillation frequency[Note] of each product is measured by outputting 1 Hz from the RTC1HZ pin when the F15 bit of the watch error correction register (SUBCUD) is cleared to 0 (stops the watch error correction).

Note See **8.4.6 1 Hz output of real-time clock 2** for the procedure of outputting about 1 Hz from the RTC1HZ pin.

[Calculating the target correction value]

(When the output frequency from the RTCCL pin is 0.9999817 Hz)

Oscillation frequency = 32768 × 0.9999817 ≈ 32767.40 Hz

Assume the target frequency to be 32768 Hz. Then the target correction value is calculated as follows.

Target correction value = (Oscillation frequency – Target frequency) ÷ Target frequency
= (32767.40 – 32768.00) ÷ 32768.00
≈ –18.3 ppm

Remarks 1. The oscillation frequency is the frequency of the input clock (f_{RTC}). It can be calculated from the output frequency of the
RTC1HZ pin × 32768 when watch error correction is not operating.

2. The target correction value is the oscillation frequency deviation (unit: [ppm]) of the crystal resonator.

3. The target frequency is the frequency resulting after watch error correction performed.

Calculating the F8 to F0 value of the watch error correction register

The F8 to F0 values in the SUBCUD register is calculated from the target correction value by using the following expression.

$$\text{SUBCUD[8:0]} = \left(\frac{\text{Target correction value [ppm]} \times 2^{15}}{10^6} \right)_{\text{2's complement (9 bit fixed-point format)}} + 0001.00000\text{B}$$

Examples 1. When target correction value = –18.3 [ppm]

$$\begin{aligned}\text{SUBCUD[8:0]} &= (-18.3 \times 2^{15} / 10^6)_{\text{2's complement (9 bit fixed-point format)}} + 0001.00000\text{B}\\ &= (-0.59965)_{\text{2's complement (9 bit fixed-point format)}} + 0001.00000\text{B}\\ &= 1111.01101\text{B} + 0001.00000\text{B}\\ &= 0000.01101\text{B}\end{aligned}$$

Examples 2. When target correction value = 94.0 [ppm]

$$\begin{aligned}\text{SUBCUD[8:0]} &= (94.0 \times 2^{15} / 10^6)_{\text{2's complement (9 bit fixed-point format)}} + 0001.00000\text{B}\\ &= (+3.08019)_{\text{2's complement (9 bit fixed-point format)}} + 0001.00000\text{B}\\ &= 0011.00011\text{B} + 0001.00000\text{B}\\ &= 0100.00011\text{B}\end{aligned}$$

CHAPTER 9 12-BIT INTERVAL TIMER

9.1 Functions of 12-bit Interval Timer

An interrupt (INTIT) is generated at any previously specified time interval. It can be used for waking the system up from STOP mode and triggering an A/D converter's SNOOZE mode.

9.2 Configuration of 12-bit Interval Timer

The 12-bit interval timer includes the following hardware.

Table 9-1. Configuration of 12-bit Interval Timer

Item	Configuration
Counter	12-bit counter
Control registers	Peripheral enable register 1 (PER1)
	Subsystem clock supply mode control register (OSMC)
	12-bit interval timer control register (ITMC)

Figure 9-1. Block Diagram of 12-bit Interval Timer

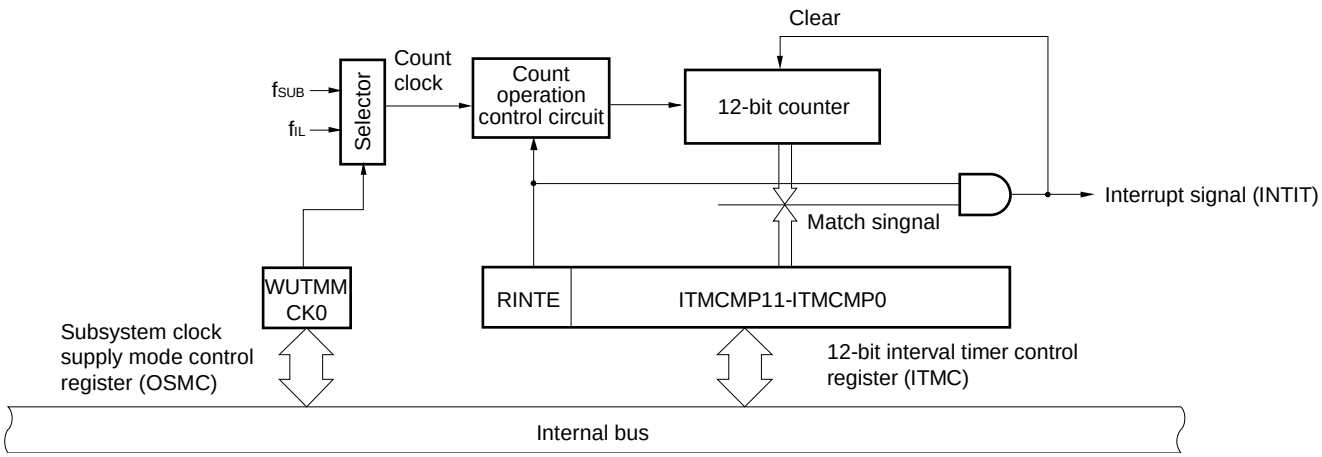

9.3 Registers Controlling 12-bit Interval Timer

The 12-bit interval timer is controlled by the following registers.

- Peripheral enable register 1 (PER1)
- Subsystem clock supply mode control register (OSMC)
- 12-bit interval timer control register (ITMC)

9.3.1 Peripheral enable register 1 (PER1)

This register is used to enable or disable supplying the clock to the peripheral hardware. Clock supply to a hardware macro that is not used is stopped in order to reduce the power consumption and noise.

When the 12-bit interval timer is used, be sure to set bit 7 (TMKAEN) of this register to 1.

The PER1 register can be set by a 1-bit or 8-bit memory manipulation instruction.

Reset signal generation clears this register to 00H.

Figure 9-2. Format of Peripheral Enable Register 1 (PER1)

Address: F007AH After reset: 00H R/W

Symbol	<7>	6	<5>	<4>	3	2	1	0
PER1	TMKAEN	0	CMPEN	TKB2EN	0	0	0	0

TMKAEN	Control of 12-bit interval timer input clock supply
0	Stops input clock supply. ● SFRs used by the 12-bit interval timer cannot be written. ● The 12-bit interval timer is in the reset status.
1	Enables input clock supply. ● SFRs used by the 12-bit interval timer can be read and written.

Cautions 1. When using the 12-bit interval timer, first set the TMKAEN bit to 1. If TMKAEN = 0, writing to a control register of the 12-bit interval timer is ignored, and, even if the register is read, only the default value is read (except the subsystem clock supply mode control register (OSMC)).

2. Clock supply to peripheral functions other than real-time clock 2, 12-bit interval timer, clock output/buzzer output, and LCD controller/driver can be stopped in HALT mode when the subsystem clock is used, by setting the RTCLPC bit of the subsystem clock supply mode control register (OSMC) to 1. In this case, set the TMKAEN bit of the PER1 register to 1 and the other bits (bits 0 to 6) to 0.

3. Be sure to clear the bits 0 to 3 and 6 to 0.

9.3.2 Subsystem clock supply mode control register (OSMC)

The OSMC register is used to reduce power consumption by stopping unnecessary clock functions.

If the RTCLPC bit is set to 1, power consumption can be reduced, because clock supply to the peripheral functions, except real-time clock 2, 12-bit interval timer, clock output/buzzer output controller, and LCD controller/driver, is stopped in STOP mode or HALT mode while subsystem clock is selected as CPU clock.

In addition, the OSMC register can be used to select the operation clock of real-time clock 2, 12-bit interval timer, clock output/buzzer output controller, and LCD controller/driver.

The OSMC register can be set by an 8-bit memory manipulation instruction.

Reset signal generation clears this register to 00H.

Figure 9-3. Format of Subsystem Clock Supply Mode Control Register (OSMC)

Address: F00F3H After reset: 00H R/W

Symbol	7	6	5	4	3	2	1	0
OSMC	RTCLPC	0	0	WUTMMCK0	0	0	0	0

RTCLPC	Setting in STOP mode or in HALT mode while subsystem clock is selected as CPU clock
0	Enables supplying the subsystem clock to peripheral functions (See **Tables 21-1** to **21-3** for peripheral functions whose operations are enabled.)
1	Stops supplying the subsystem clock to peripheral functions other than real-time clock 2, 12-bit interval timer, clock output/buzzer output controller, and LCD controller/driver.

WUTMMCK0	Selection of operation clock for real-time clock 2, 12-bit interval timer, and LCD controller/driver	Selection of clock output from PCLBUZn pin of clock output/buzzer output controller
0	Subsystem clock (f_{SUB})	Selecting the subsystem clock (f_{SUB}) is enabled.
1	Low-speed on-chip oscillator clock (f_{IL})	Selecting the subsystem clock (f_{SUB}) is disabled.

Cautions 1. Be sure to select the subsystem clock (WUTMMCK0 bit = 0) if the subsystem clock is oscillating.

2. When WUTMMCK0 is set to 1, the low-speed on-chip oscillator clock oscillates.

3. The subsystem clock and low-speed on-chip oscillator clock can only be switched by using the WUTMMCK0 bit if real-time clock 2, 12-bit interval timer, and LCD controller/driver are all stopped.

9.3.3 12-bit interval timer control register (ITMC)

This register is used to set up the starting and stopping of the 12-bit interval timer operation and to specify the timer compare value.

The ITMC register can be set by a 16-bit memory manipulation instruction.

Reset signal generation sets this register to 0FFFH.

Figure 9-4. Format of 12-bit Interval Timer Control Register (ITMC)

Address: FFF90H After reset: 0FFFH R/W

Symbol	15	14	13	12	11 to 0
ITMC	RINTE	0	0	0	ITMCMP11 to ITMCMP0

RINTE	12-bit Interval timer operation control
0	Count operation stopped (count clear)
1	Count operation started

ITMCMP11 to ITMCMP0	Specification of the 12-bit interval timer compare value
001H	These bits generate an interrupt at the fixed cycle (count clock cycles x (ITMCMP setting + 1)).
• • •	
FFFH	
000H	Setting prohibited
Example interrupt cycles when 001H or FFFH is specified for ITMCMP11 to ITMCMP0 • ITMCMP11 to ITMCMP0 = 001H, count clock: when f_{SUB} = 32.768 kHz 1/32.768 [kHz] × (1 + 1) = 0.06103515625 [ms] ≈ 61.03 [μs] • ITMCMP11 to ITMCMP0 = FFFH, count clock: when f_{SUB} = 32.768 kHz 1/32.768 [kHz] × (4095 + 1) = 125 [ms]	

Cautions 1. Before changing the RINTE bit from 1 to 0, use the interrupt mask flag register to disable the INTIT interrupt servicing. When the operation starts (changing the RINTE bit from 0 to 1) again, clear the TMKAIF flag, and then enable the interrupt servicing.

2. The value read from the RINTE bit is applied one count clock cycle after setting the RINTE bit.

3. When setting the RINTE bit after returned from standby mode and entering standby mode again, confirm that the written value of the RINTE bit is reflected, or wait that more than one clock of the count clock has elapsed after returned from standby mode. Then enter standby mode.

4. Only change the setting of the ITMCMP11 to ITMCMP0 bits when RINTE = 0.
However, it is possible to change the settings of the ITMCMP11 to ITMCMP0 bits at the same time as when changing RINTE from 0 to 1 or 1 to 0.

9.4 12-bit Interval Timer Operation

9.4.1 12-bit interval timer operation timing

The count value specified for the ITMCMP11 to ITMCMP0 bits is used as an interval to operate a 12-bit interval timer that repeatedly generates interrupt requests (INTIT).

When the RINTE bit is set to 1, the 12-bit counter starts counting.

When the 12-bit counter value matches the value specified for the ITMCMP11 to ITMCMP0 bits, the 12-bit counter value is cleared to 0, counting continues, and an interrupt request signal (INTIT) is generated at the same time.

The basic operation of the 12-bit interval timer is as follows.

Figure 9-5. 12-bit Interval Timer Operation Timing (ITMCMP11 to ITMCMP0 = 0FFH, count clock: f_{SUB} = 32.768 kHz)

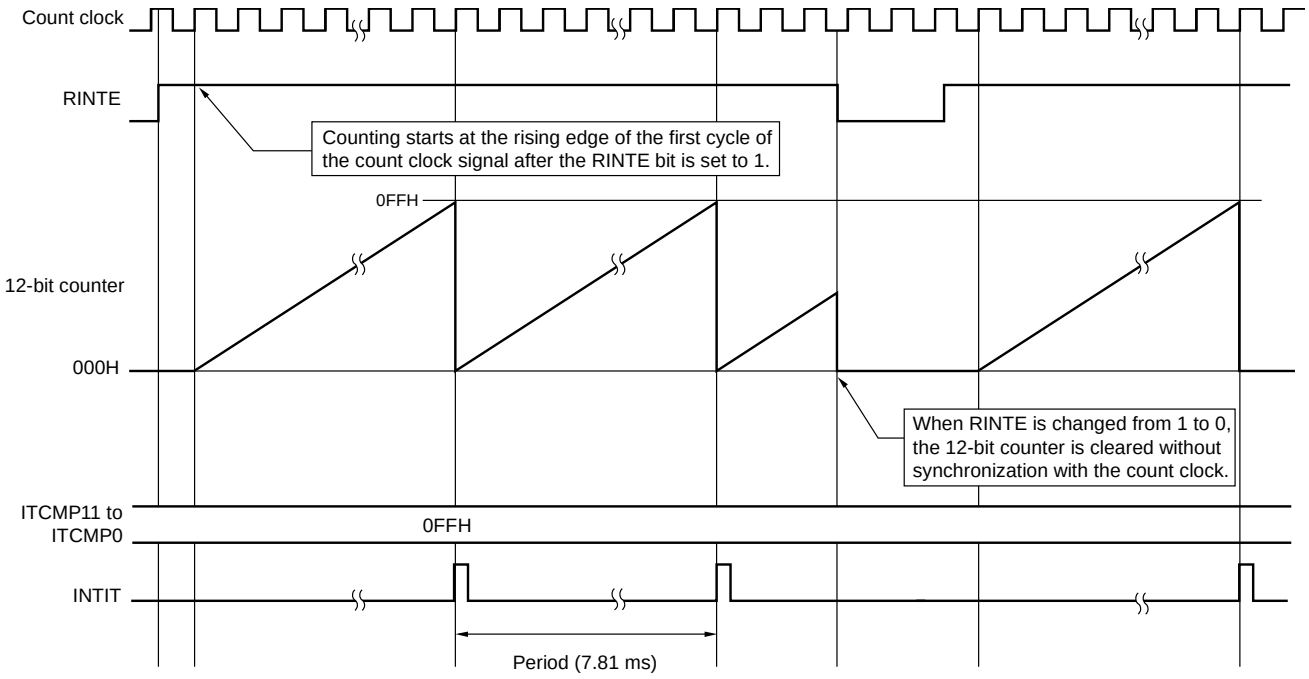

9.4.2 Start of count operation and re-enter to HALT/STOP mode after returned from HALT/STOP mode

When setting the RINTE bit after returned from HALT or STOP mode and entering HALT or STOP mode again, write 1 to the RINTE bit, and confirm the written value of the RINTE bit is reflected or wait for at least one cycle of the count clock. Then, enter HALT or STOP mode.

- After setting RINTE to 1, confirm by polling that the RINTE bit has become 1, and then enter HALT or STOP mode (see Example 1 in Figure 9-6).
- After setting RINTE to 1, wait for at least one cycle of the count clock and then enter HALT or STOP mode (see Example 2 in Figure 9-6).

Figure 9-6. Procedure of Entering to HALT or STOP Mode After Setting RINTE to 1

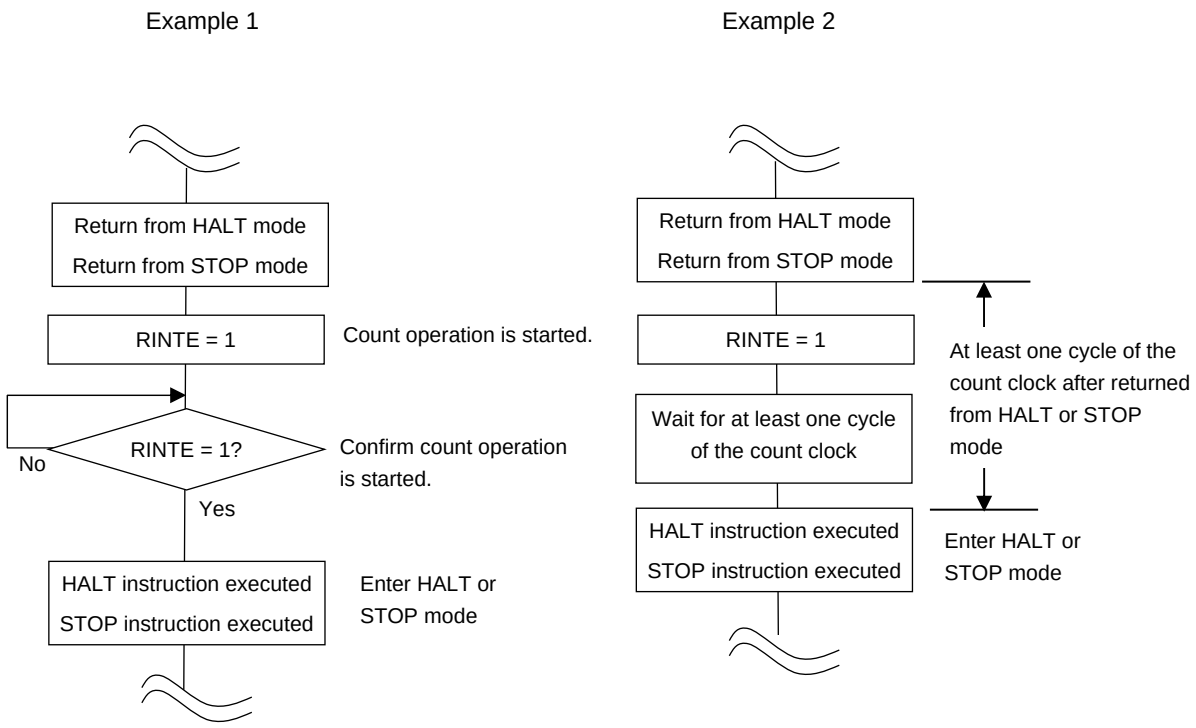

CHAPTER 10 CLOCK OUTPUT/BUZZER OUTPUT CONTROLLER

10.1 Functions of Clock Output/Buzzer Output Controller

The clock output controller is intended for clock output for supply to peripheral ICs. Buzzer output is a function to output a square wave of buzzer frequency.

One pin can be used to output a clock or buzzer sound.

Two output pins, PCLBUZ0 and PCLBUZ1, are available.

The PCLBUZn pin outputs a clock selected by clock output select register n (CKSn).

Figure 10-1 shows the block diagram of clock output/buzzer output controller.

Remark n = 0, 1

Figure 10-1. Block Diagram of Clock Output/Buzzer Output Controller

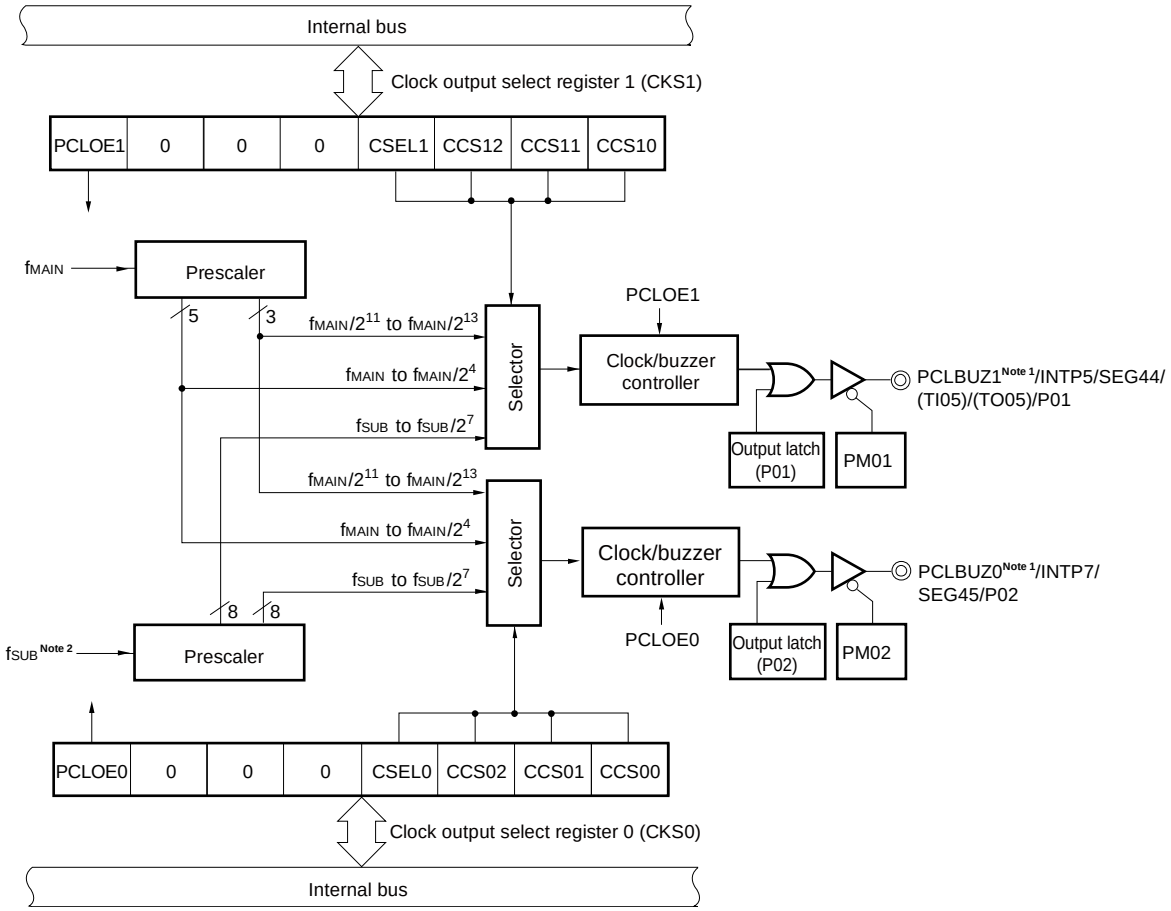

Notes 1. For the frequencies that can be output from PCLBUZ0 and PCLBUZ1, see **32.4 AC Characteristics** or **33.4 AC Characteristics**.

2. Selecting f_{SUB} as the output clock of the clock output/buzzer output controller is prohibited when the WUTMMCK0 bit of the OSMC register is set to 1.

Remark The above diagram shows the clock output/buzzer output pins when PIOR3 is 0.
In other cases, the name of pins, output latches (Pxx) and PMxx should be read differently.

10.2 Configuration of Clock Output/Buzzer Output Controller

The clock output/buzzer output controller includes the following hardware.

Table 10-1. Configuration of Clock Output/Buzzer Output Controller

Item	Configuration
Control registers	Clock output select register n (CKSn) Subsystem clock supply mode control register (OSMC) Port mode register 0 (PM0) Port register 0 (P0)

10.3 Registers Controlling Clock Output/Buzzer Output Controller

The following two registers are used to control the clock output/buzzer output controller.

- Clock output select register n (CKSn)
- Subsystem clock supply mode control register (OSMC)
- Port mode register 0 (PM0)

10.3.1 Clock output select register n (CKSn)

This register specifies output enable/disable for clock output or for the buzzer frequency output pin (PCLBUZn), and specifies the output clock.

Select the clock to be output from the PCLBUZn pin by using the CKSn register.

The CKSn register is set by a 1-bit or 8-bit memory manipulation instruction.

Reset signal generation clears this register to 00H.

Figure 10-2. Format of Clock Output Select Register n (CKSn)

Address: FFFA5H (CKS0), FFFA6H (CKS1) After reset: 00H R/W

Symbol	<7>	6	5	4	3	2	1	0
CKSn	PCLOEn	0	0	0	CSELn	CCSn2	CCSn1	CCSn0

PCLOEn	PCLBUZn pin output enable/disable specification
0	Output disable (default)
1	Output enable

CSELn	CCSn2	CCSn1	CCSn0	PCLBUZn pin output clock selection				
					f_{MAIN} = 5 MHz	f_{MAIN} = 10 MHz	f_{MAIN} = 20 MHz	f_{MAIN} = 24 MHz
0	0	0	0	f_{MAIN}	5 MHz	10 MHz[Note 1]	Setting prohibited[Note 1]	Setting prohibited[Note 1]
0	0	0	1	$f_{MAIN}/2$	2.5 MHz	5 MHz	10 MHz[Note 1]	12 MHz[Note 1]
0	0	1	0	$f_{MAIN}/2^2$	1.25 MHz	2.5 MHz	5 MHz	6 MHz
0	0	1	1	$f_{MAIN}/2^3$	625 kHz	1.25 MHz	2.5 MHz	3 MHz
0	1	0	0	$f_{MAIN}/2^4$	312.5 kHz	625 kHz	1.25 MHz	1.5 MHz
0	1	0	1	$f_{MAIN}/2^{11}$	2.44 kHz	4.88 kHz	9.76 kHz	11.7 kHz
0	1	1	0	$f_{MAIN}/2^{12}$	1.22 kHz	2.44 kHz	4.88 kHz	5.86 kHz
0	1	1	1	$f_{MAIN}/2^{13}$	610 Hz	1.22 kHz	2.44 kHz	2.93 kHz
1	0	0	0	f_{SUB}[Note 2]	32.768 kHz			
1	0	0	1	$f_{SUB}/2$[Note 2]	16.384 kHz			
1	0	1	0	$f_{SUB}/2^2$[Note 2]	8.192 kHz			
1	0	1	1	$f_{SUB}/2^3$[Note 2]	4.096 kHz			
1	1	0	0	$f_{SUB}/2^4$[Note 2]	2.048 kHz			
1	1	0	1	$f_{SUB}/2^5$[Note 2]	1.024 kHz			
1	1	1	0	$f_{SUB}/2^6$[Note 2]	512 Hz			
1	1	1	1	$f_{SUB}/2^7$[Note 2]	256 Hz			

Notes 1. Use the output clock up to 16 MHz. See **32.4 AC Characteristics** or **33.4 AC Characteristics** for details.

2. Selecting f_{SUB} as the output clock of the clock output/buzzer output controller is prohibited when the WUTMMCK0 bit of the OSMC register is set to 1.

Cautions 1. Change the output clock after disabling clock output (PCLOEn = 0).

2. To shift to STOP mode when the main system clock is selected (CSELn = 0), set PCLOEn to 0 before executing the STOP instruction. When the subsystem clock is selected (CSELn = 1), PCLOEn can be set to 1 because the clock can be output in STOP mode.

Remarks 1. n = 0, 1

2. f_{MAIN}: Main system clock frequency

f_{SUB}: Subsystem clock frequency

10.3.2 Subsystem clock supply mode control register (OSMC)

This register is used to reduce power consumption by stopping unnecessary clock functions.

If the RTCLPC bit is set to 1, power consumption can be reduced, because clock supply to the peripheral functions other than real-time clock 2, 12-bit interval timer, clock output/buzzer output controller, and LCD controller/driver is stopped in STOP mode or in HALT mode while the subsystem clock is selected as the CPU clock.

In addition, the OSMC register can be used to select the operation clock of real-time clock 2, 12-bit interval timer, clock output/buzzer output controller, and LCD controller/driver.

The OSMC register can be set by an 8-bit memory manipulation instruction.

Reset signal generation clears this register to 00H.

Figure 10-3. Format of Subsystem Clock Supply Mode Control Register (OSMC)

Address: F00F3H After reset: 00H R/W

Symbol	7	6	5	4	3	2	1	0
OSMC	RTCLPC	0	0	WUTMMCK0	0	0	0	0

RTCLPC	Setting in STOP mode or in HALT mode while subsystem clock is selected as CPU clock
0	Enables supplying the subsystem clock to peripheral functions (See **Tables 21-1** to **21-3** for peripheral functions whose operations are enabled.)
1	Stops supplying the subsystem clock to peripheral functions other than real-time clock 2, 12-bit interval timer, clock output/buzzer output controller, and LCD controller/driver.

WUTMMCK0	Selection of operation clock for real-time clock 2, 12-bit interval timer, and LCD controller/driver	Selection of clock output from PCLBUZn pin of clock output/buzzer output controller
0	Subsystem clock (f_{SUB})	Selecting the subsystem clock (f_{SUB}) is enabled.
1	Low-speed on-chip oscillator clock (f_{IL})	Selecting the subsystem clock (f_{SUB}) is disabled.

Cautions 1. Be sure to select the subsystem clock (WUTMMCK0 bit = 0) if the subsystem clock is oscillating.

2. When WUTMMCK0 is set to 1, the low-speed on-chip oscillator clock oscillates.

3. Do not select f_{SUB} as the clock output or buzzer output clock when the WUTMMCK0 bit is 1.

10.3.3 Registers controlling port functions of clock output/buzzer output pins

When using the clock output/buzzer output function, set the registers that control the port functions multiplexed on the target channel (port mode register (PMxx), port register (Pxx)). For details, see **4.3.1 Port mode registers (PMxx)** and **4.3.2 Port registers (Pxx)**.

When using a port pin with a multiplexed clock output/buzzer output pins (e.g. P02/SEG45/INTP7/PCLBUZ0, P01/SEG44(TI05)/(TO05)/(INTP5)/PCLBUZ1) for clock output/buzzer output, set the corresponding bits in the port mode register (PMxx) and port register (Pxx) to 0.

Example: When P02/SEG45/INTP7/PCLBUZ0 is to be used for clock output/buzzer output
Set the PM02 bit of port mode register 0 to 0.
Set the P02 bit of port register 0 to 0.

10.4 Operations of Clock Output/Buzzer Output Controller

One pin can be used to output a clock or buzzer sound.
The PCLBUZ0 pin outputs a clock/buzzer selected by clock output select register 0 (CKS0).
The PCLBUZ1 pin outputs a clock/buzzer selected by clock output select register 1 (CKS1).

10.4.1 Operation as output pin

Use the following procedure to output a clock or buzzer from the PCLBUZn pin.

<1> Set 0 in the bit of the port mode register (PMxx) and port register (Pxx) which correspond to the port which has a pin used as the PCLBUZ0 pin.
<2> Select the output frequency with bits 0 to 3 (CCSn0 to CCSn2, CSELn) of clock output select register n (CKSn) for the PCLBUZn pin (output is disabled).
<3> Set bit 7 (PCLOEn) of the CKSn register to 1 to enable clock/buzzer output.

Remarks 1. The clock output controller starts or stops outputting the clock one cycle after enabling or disabling clock output (PCLOEn bit). At this time, pulses with a narrow width are not output. Figure 10-4 shows enabling or stopping output using the PCLOEn bit and the timing of outputting the clock.
2. n = 0, 1

Figure 10-4. Timing of Outputting Clock from PCLBUZn Pin

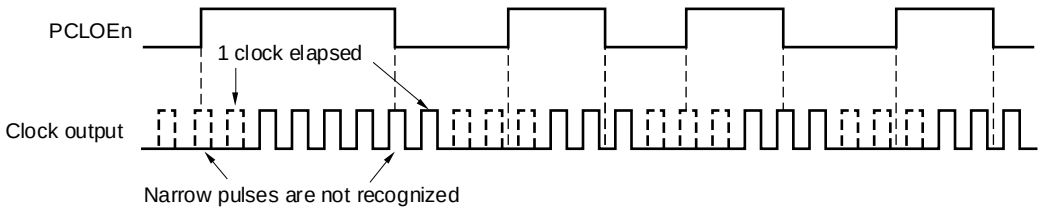

10.5 Cautions of Clock Output/Buzzer Output Controller

When the main system clock is selected for the PCLBUZn output (CSEL = 0), if STOP mode is entered within 1.5 main system clock cycles after the output is disabled (PCLOEn = 0), the PCLBUZn output width becomes shorter.

CHAPTER 11 WATCHDOG TIMER

11.1 Functions of Watchdog Timer

The counting operation of the watchdog timer is set by the option byte (000C0H).

The watchdog timer operates on the low-speed on-chip oscillator clock.

The watchdog timer is used to detect an inadvertent program loop. If a program loop is detected, an internal reset signal is generated.

Program loop is detected in the following cases.

- If the watchdog timer counter overflows
- If a 1-bit manipulation instruction is executed on the watchdog timer enable register (WDTE)
- If data other than “ACH” is written to the WDTE register
- If data is written to the WDTE register during a window close period

When a reset occurs due to the watchdog timer, bit 4 (WDTRF) of the reset control flag register (RESF) is set to 1. For details of the RESF register, see **CHAPTER 22 RESET FUNCTION**.

When 75% of the overflow time + 1/2 f_{IL} is reached, an interval interrupt can be generated.

11.2 Configuration of Watchdog Timer

The watchdog timer includes the following hardware.

Table 11-1. Configuration of Watchdog Timer

Item	Configuration
Counter	Internal counter (17 bits)
Control register	Watchdog timer enable register (WDTE)

How the counter operation is controlled, overflow time, window open period, and interval interrupt are set by the option byte.

Table 11-2. Setting of Option Bytes and Watchdog Timer

Setting of Watchdog Timer	Option Byte (000C0H)
Watchdog timer interval interrupt	Bit 7 (WDTINT)
Window open period	Bits 6 and 5 (WINDOW1, WINDOW0)
Controlling counter operation of watchdog timer	Bit 4 (WDTON)
Overflow time of watchdog timer	Bits 3 to 1 (WDCS2 to WDCS0)
Controlling counter operation of watchdog timer (in HALT/STOP mode)	Bit 0 (WDSTBYON)

Remark For the option byte, see **CHAPTER 27 OPTION BYTE**.

Figure 11-1. Block Diagram of Watchdog Timer

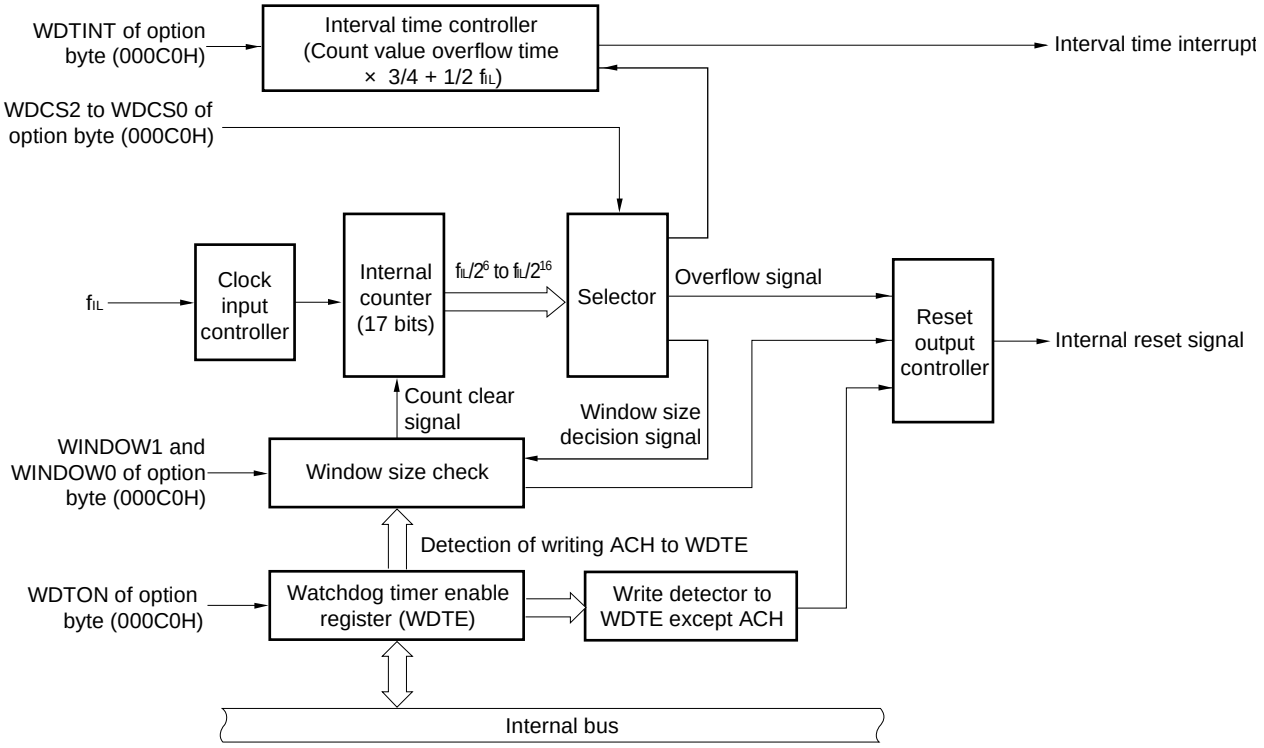

Remark f_{IL}: Low-speed on-chip oscillator clock

11.3 Register Controlling Watchdog Timer

The watchdog timer is controlled by the watchdog timer enable register (WDTE).

11.3.1 Watchdog timer enable register (WDTE)

Writing “ACH” to the WDTE register clears the watchdog timer counter and the watchdog timer starts counting again.
This register can be set by an 8-bit memory manipulation instruction.
Reset signal generation sets this register to 9AH or 1AH[Note].

Figure 11-2. Format of Watchdog Timer Enable Register (WDTE)

Address: FFFABH After reset: 9AH/1AH[Note] R/W

Symbol	7	6	5	4	3	2	1	0
WDTE								

Note The WDTE register reset value differs depending on the WDTON bit setting value of the option byte (000C0H). To operate watchdog timer, set the WDTON bit to 1.

WDTON Bit Setting Value	WDTE Register Reset Value
0 (watchdog timer count operation disabled)	1AH
1 (watchdog timer count operation enabled)	9AH

Cautions 1. If a value other than “ACH” is written to the WDTE register, an internal reset signal is generated.
2. If a 1-bit memory manipulation instruction is executed for the WDTE register, an internal reset signal is generated.
3. The value read from the WDTE register is 9AH/1AH (this differs from the written value (ACH)).

11.4 Operation of Watchdog Timer

11.4.1 Controlling operation of watchdog timer

1. When the watchdog timer is used, its operation is specified by the option byte (000C0H).

   - Enable counting operation of the watchdog timer by setting bit 4 (WDTON) of the option byte (000C0H) to 1 (the counter starts operating after a reset release) (for details, see **CHAPTER 27**).

WDTON	Watchdog Timer Counter
0	Counter operation disabled (counting stopped after reset)
1	Counter operation enabled (counting started after reset)

   - Set an overflow time by using bits 3 to 1 (WDCS2 to WDCS0) of the option byte (000C0H) (for details, see **11.4.2** and **CHAPTER 27**).
   - Set a window open period by using bits 6 and 5 (WINDOW1 and WINDOW0) of the option byte (000C0H) (for details, see **11.4.3** and **CHAPTER 27**).

2. After a reset release, the watchdog timer starts counting.
3. By writing “ACH” to the watchdog timer enable register (WDTE) after the watchdog timer starts counting and before the overflow time set by the option byte, the watchdog timer is cleared and starts counting again.
4. After that, write the WDTE register the second time or later after a reset release during the window open period. If the WDTE register is written during a window close period, an internal reset signal is generated.
5. If the overflow time expires without “ACH” written to the WDTE register, an internal reset signal is generated.
   An internal reset signal is generated in the following cases.

   - If a 1-bit manipulation instruction is executed on the WDTE register
   - If data other than “ACH” is written to the WDTE register

Cautions 1. When data is written to the watchdog timer enable register (WDTE) for the first time after reset release, the watchdog timer is cleared in any timing regardless of the window open time, as long as the register is written before the overflow time, and the watchdog timer starts counting again.

2. After “ACH” is written to the WDTE register, an error of up to 2 clocks (f_{IL}) may occur before the watchdog timer is cleared.

3. The watchdog timer can be cleared immediately before the count value overflows.

Cautions 4. The operation of the watchdog timer in the HALT and STOP and SNOOZE modes differs as follows depending on the set value of bit 0 (WDSTBYON) of the option byte (000C0H).

	WDSTBYON = 0	WDSTBYON = 1
In HALT mode	Watchdog timer operation stops.	Watchdog timer operation continues.
In STOP mode		
In SNOOZE mode		

If WDSTBYON = 0, the watchdog timer resumes counting after the HALT or STOP mode is released. At this time, the counter is cleared to 0 and counting starts.
When operating with the X1 oscillation clock after releasing the STOP mode, the CPU starts operating after the oscillation stabilization time has elapsed.
Therefore, if the period between the STOP mode release and the watchdog timer overflow is short, an overflow occurs during the oscillation stabilization time, causing a reset.
Consequently, set the overflow time in consideration of the oscillation stabilization time when operating with the X1 oscillation clock and when the watchdog timer is to be cleared after the STOP mode release by an interval interrupt.

11.4.2 Setting overflow time of watchdog timer

Set the overflow time of the watchdog timer by using bits 3 to 1 (WDCS2 to WDCS0) of the option byte (000C0H).

If an overflow occurs, an internal reset signal is generated. The present count is cleared and the watchdog timer starts counting again by writing “ACH” to the watchdog timer enable register (WDTE) during the window open period before the overflow time.

The following overflow times can be set.

Table 11-3. Setting of Overflow Time of Watchdog Timer

WDCS2	WDCS1	WDCS0	Overflow Time of Watchdog Timer (f_{IL} = 17.25 kHz (MAX.))
0	0	0	$2^6/f_{IL}$ (3.71 ms)
0	0	1	$2^7/f_{IL}$ (7.42 ms)
0	1	0	$2^8/f_{IL}$ (14.84 ms)
0	1	1	$2^9/f_{IL}$ (29.68 ms)
1	0	0	$2^{11}/f_{IL}$ (118.72 ms)
1	0	1	$2^{13}/f_{IL}$ (474.89 ms)Note
1	1	0	$2^{14}/f_{IL}$ (949.79 ms)Note
1	1	1	$2^{16}/f_{IL}$ (3799.18 ms)Note

Note Using the watchdog timer under the following conditions may lead to the generation of an interval interrupt (INTWDTI) after one cycle of the watchdog timer clock once the watchdog timer counter has been cleared.

Usage conditions that may lead to the generation of an interval interrupt:
- The overflow time of the watchdog timer is set to $2^{13}/f_{IL}$, $2^{14}/f_{IL}$, or $2^{16}/f_{IL}$,
- the interval interrupt is in use (the setting of the WDTINT bit of the relevant option byte is 1), and
- ACH is written to the WDTE register (FFFABH) when the watchdog timer counter has reached or exceeded 75% of the overflow time.

This interrupt can be masked by clearing the watchdog timer counter through steps 1 to 5 below.

1. Set the WDTIMK bit of the interrupt mask flag register 0 (MK0L) to 1 before clearing the watchdog timer counter.
2. Clear the watchdog timer counter.
3. Wait for at least 80 µs.
4. Clear the WDTIIF bit of the interrupt request flag register (IF0L) to 0.
5. Clear the WDTIMK bit of the interrupt mask flag register 0 (MK0L) to 0.

Remark f_{IL}: Low-speed on-chip oscillator clock frequency

11.4.3 Setting window open period of watchdog timer

Set the window open period of the watchdog timer by using bits 6 and 5 (WINDOW1, WINDOW0) of the option byte (000C0H). The outline of the window is as follows.

- If “ACH” is written to the watchdog timer enable register (WDTE) during the window open period, the watchdog timer is cleared and starts counting again.
- Even if “ACH” is written to the WDTE register during the window close period, an abnormality is detected and an internal reset signal is generated.

Example: If the window open period is 50%

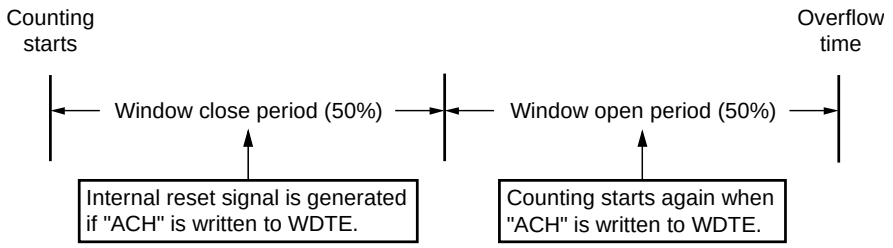

Caution When data is written to the WDTE register for the first time after reset release, the watchdog timer is cleared in any timing regardless of the window open time, as long as the register is written before the overflow time, and the watchdog timer starts counting again.

The window open period can be set is as follows.

Table 11-4. Setting Window Open Period of Watchdog Timer

WINDOW1	WINDOW0	Window Open Period of Watchdog Timer
0	0	Setting prohibited
0	1	50%
1	0	75% Note
1	1	100%

Note When the window open period is set to 75%, clearing the counter of the watchdog timer (writing ACH to WDTE) must proceed outside the corresponding period from among those listed below, over which clearing of the counter is prohibited (for example, confirming that the interval timer interrupt request flag (WDTIIF) of the watchdog timer is set).

WDCS2	WDCS1	WDCS0	Watchdog timer overflow time (f_{IL} = 17.25 kHz (MAX.))	Period over which clearing the counter is prohibited when the window open period is set to 75%
0	0	0	$2^6/f_{IL}$ (3.71 ms)	1.85 ms to 2.51 ms
0	0	1	$2^7/f_{IL}$ (7.42 ms)	3.71 ms to 5.02 ms
0	1	0	$2^8/f_{IL}$ (14.84 ms)	7.42 ms to 10.04 ms
0	1	1	$2^9/f_{IL}$ (29.68 ms)	14.84 ms to 20.08 ms
1	0	0	$2^{11}/f_{IL}$ (118.72 ms)	56.36 ms to 80.32 ms
1	0	1	$2^{13}/f_{IL}$ (474.89 ms)	237.44 ms to 321.26 ms
1	1	0	$2^{14}/f_{IL}$ (949.79 ms)	474.89 ms to 642.51 ms
1	1	1	$2^{16}/f_{IL}$ (3799.18 ms)	1899.59 ms to 2570.04 ms

Caution **When bit 0 (WDSTBYON) of the option byte (000C0H) = 0, the window open period is 100% regardless of the values of the WINDOW1 and WINDOW0 bits.**

Remark If the overflow time is set to $2^9/f_{IL}$, the window close time and open time are as follows.

	Setting of Window Open Period		
	50%	75%	100%
Window close time	0 to 20.08 ms	0 to 10.04 ms	None
Window open time	20.08 to 29.68 ms	10.04 to 29.68 ms	0 to 29.68 ms

<When window open period is 50%>

- Overflow time:
  $2^9/f_{IL}$ (MAX.) = 2^9/17.25 kHz = 29.68 ms
- Window close time:
  0 to $2^9/f_{IL}$ (MIN.) × (1 – 0.5) = 0 to 2^9/12.75 kHz × 0.5 = 0 to 20.08 ms
- Window open time:
  $2^9/f_{IL}$ (MIN.) × (1 – 0.5) to $2^9/f_{IL}$ (MAX.) = 2^9/12.75 kHz × 0.5 to 2^9/17.25 kHz = 20.08 to 29.68 ms

11.4.4 Setting watchdog timer interval interrupt

Depending on the setting of bit 7 (WDTINT) of an option byte (000C0H), an interval interrupt (INTWDTI) can be generated when 75% of the overflow time + 1/2 f_{IL} is reached.

Table 11-5. Setting of Watchdog Timer Interval Interrupt

WDTINT	Use of Watchdog Timer Interval Interrupt
0	Interval interrupt is used.
1	Interval interrupt is generated when 75% of the overflow time + 1/2 f_{IL} is reached.

Caution When operating with the X1 oscillation clock after releasing the STOP mode, the CPU starts operating after the oscillation stabilization time has elapsed.
Therefore, if the period between the STOP mode release and the watchdog timer overflow is short, an overflow occurs during the oscillation stabilization time, causing a reset.
Consequently, set the overflow time in consideration of the oscillation stabilization time when operating with the X1 oscillation clock and when the watchdog timer is to be cleared after the STOP mode release by an interval interrupt.

Remark The watchdog timer continues counting even after INTWDTI is generated (until ACH is written to the watchdog timer enable register (WDTE)). If ACH is not written to the WDTE register before the overflow time, an internal reset signal is generated.

CHAPTER 12 A/D CONVERTER

The number of analog input channels of the A/D converter differs, depending on the product.

	64-pin	80-pin
Analog input channels	9 ch (ANI0, ANI1, ANI16, ANI20 to ANI25)	12 ch (ANI0, ANI1, ANI16 to ANI25)

12.1 Function of A/D Converter

The A/D converter is used to convert analog input signals into digital values, and is configured to control analog inputs, including up to 12 channels of A/D converter analog inputs (ANI0, ANI1 and ANI16 to ANI25). 10-bit or 8-bit resolution can be selected by the ADTYP bit of the A/D converter mode register 2 (ADM2).

The A/D converter has the following function.

- **10-bit/8-bit resolution A/D conversion**

  10-bit or 8-bit resolution A/D conversion is carried out repeatedly for one analog input channel selected from ANI0, ANI1 and ANI16 to ANI25. Each time an A/D conversion operation ends, an interrupt request (INTAD) is generated.

Various A/D conversion modes can be specified by using the mode combinations below.

Trigger mode	Software trigger	Conversion is started by software.
	Hardware trigger no-wait mode	Conversion is started by detecting a hardware trigger.
	Hardware trigger wait mode	The power is turned on by detecting a hardware trigger while the system is off and in the conversion standby state, and conversion is then started automatically after the stabilization wait time passes. When using the SNOOZE mode function, specify the hardware trigger wait mode.
Conversion operation mode	One-shot conversion mode	A/D conversion is performed on the selected channel once.
	Sequential conversion mode	A/D conversion is sequentially performed on the selected channels until it is stopped by software.
Operation voltage mode	Standard 1 or standard 2 mode	Conversion is done in the operation voltage range of 2.7 V ≤ V_{DD} ≤ 5.5 V.
	Low voltage 1 or low voltage 2 mode	Conversion is done in the operation voltage range of 1.6 V ≤ V_{DD} ≤ 5.5 V. Select this mode for conversion at a low voltage. Because the operation voltage is low, it is internally boosted during conversion.
Sampling time selection	Sampling clock cycles: 7 f_{AD}	The sampling time in standard 1 or low voltage 1 mode is seven cycles of the conversion clock (f_{AD}). Select this mode when the output impedance of the analog input source is high and the sampling time should be long.
	Sampling clock cycles: 5 f_{AD}	The sampling time in standard 2 or low voltage 2 mode is five cycles of the conversion clock (f_{AD}). Select this mode when enough sampling time is ensured (for example, when the output impedance of the analog input source is low).

Figure 12-1. Block Diagram of A/D Converter

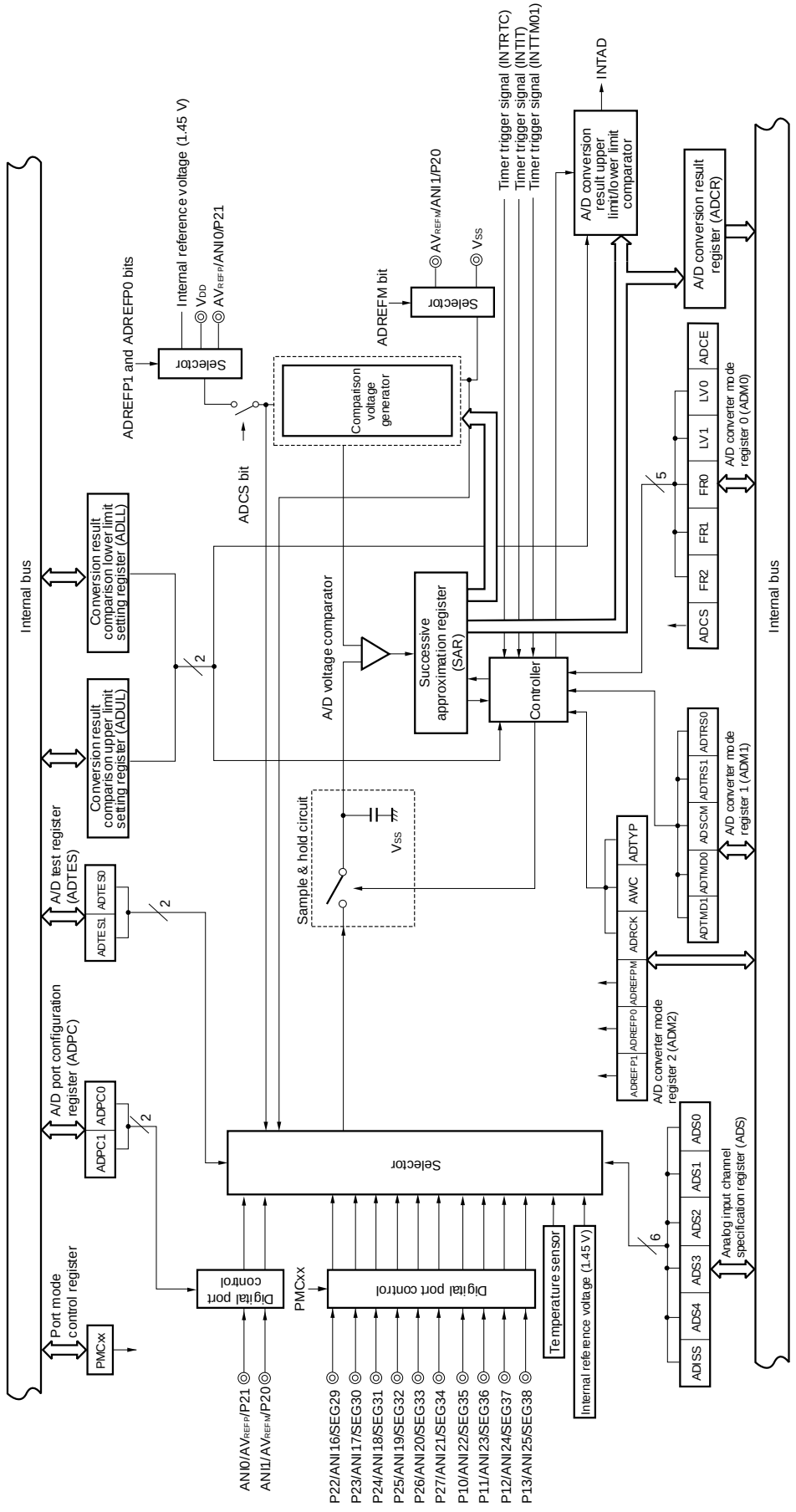

Remark Analog input pin for figure 12-1 when a 80-pin product is used.

12.2 Configuration of A/D Converter

The A/D converter includes the following hardware.

(1) ANI0, ANI1 and ANI16 to ANI25 pins

These are the analog input pins of the 12 channels of the A/D converter. They input analog signals to be converted into digital signals. Pins other than the one selected as the analog input pin can be used as I/O port pins.

(2) Sample & hold circuit

The sample & hold circuit samples each of the analog input voltages sequentially sent from the input circuit, and sends them to the A/D voltage comparator. This circuit also holds the sampled analog input voltage during A/D conversion.

(3) A/D voltage comparator

This A/D voltage comparator compares the voltage generated from the voltage tap of the comparison voltage generator with the analog input voltage. If the analog input voltage is found to be greater than the reference voltage (1/2 AV_{REF}) as a result of the comparison, the most significant bit (MSB) of the successive approximation register (SAR) is set. If the analog input voltage is less than the reference voltage (1/2 AV_{REF}), the MSB bit of the SAR is reset.

After that, bit 8 of the SAR register is automatically set, and the next comparison is made. The voltage tap of the comparison voltage generator is selected by the value of bit 9, to which the result has been already set.

Bit 9 = 0: (1/4 AV_{REF})
Bit 9 = 1: (3/4 AV_{REF})

The voltage tap of the comparison voltage generator and the analog input voltage are compared and bit 8 of the SAR register is manipulated according to the result of the comparison.

Analog input voltage ≥ Voltage tap of comparison voltage generator: Bit 8 = 1
Analog input voltage ≤ Voltage tap of comparison voltage generator: Bit 8 = 0

Comparison is continued like this to bit 0 of the SAR register.

When performing A/D conversion at a resolution of 8 bits, the comparison continues until bit 2 of the SAR register.

Remark AV_{REF}: The + side reference voltage of the A/D converter. This can be selected from AV_{REFP}, the internal reference voltage (1.45 V), and V_{DD}.

(4) Comparison voltage generator

The comparison voltage generator generates the comparison voltage input from an analog input pin.

(5) Successive approximation register (SAR)

The SAR register is a register that sets voltage tap data whose values from the comparison voltage generator match the voltage values of the analog input pins, 1 bit at a time starting from the most significant bit (MSB).

If data is set in the SAR register all the way to the least significant bit (LSB) (end of A/D conversion), the contents of the SAR register (conversion results) are held in the A/D conversion result register (ADCR). When all the specified A/D conversion operations have ended, an A/D conversion end interrupt request signal (INTAD) is generated.

(6) 10-bit A/D conversion result register (ADCR)

The A/D conversion result is loaded from the successive approximation register to this register each time A/D conversion is completed, and the ADCR register holds the A/D conversion result in its higher 10 bits (the lower 6 bits are fixed to 0).

(7) 8-bit A/D conversion result register (ADCRH)

The A/D conversion result is loaded from the successive approximation register to this register each time A/D conversion is completed, and the ADCRH register stores the higher 8 bits of the A/D conversion result.

(8) Controller

This circuit controls the conversion time of an input analog signal that is to be converted into a digital signal, as well as starting and stopping of the conversion operation. When A/D conversion has been completed, this controller generates INTAD through the A/D conversion result upper limit/lower limit comparator.

(9) AV_{REFP} pin

This pin inputs an external reference voltage (AV_{REFP}).

If using AV_{REFP} as the + side reference voltage of the A/D converter, set the set the ADREFP1 and ADREFP0 bits of A/D converter mode register 2 (ADM2) to 0 and 1, respectively.

The analog signals input to ANI0, ANI1 and ANI16 to ANI25 are converted to digital signals based on the voltage applied between AV_{REFP} and the – side reference voltage (AV_{REFM}/V_{SS}).

In addition to AV_{REFP}, it is possible to select V_{DD} or the internal reference voltage (1.45 V) as the + side reference voltage of the A/D converter.

(10) AV_{REFM} pin

This pin inputs an external reference voltage (AV_{REFM}). If using AV_{REFM} as the – side reference voltage of the A/D converter, set the ADREFM bit of the ADM2 register to 1.

In addition to AV_{REFM}, it is possible to select V_{SS} as the – side reference voltage of the A/D converter.

12.3 Registers Used in A/D Converter

The A/D converter uses the following registers.

- Peripheral enable register 0 (PER0)
- A/D converter mode register 0 (ADM0)
- A/D converter mode register 1 (ADM1)
- A/D converter mode register 2 (ADM2)
- 10-bit A/D conversion result register (ADCR)
- 8-bit A/D conversion result register (ADCRH)
- Analog input channel specification register (ADS)
- Conversion result comparison upper limit setting register (ADUL)
- Conversion result comparison lower limit setting register (ADLL)
- A/D test register (ADTES)
- A/D port configuration register (ADPC)
- Port mode control registers 1, 2 (PMC1, PMC2)
- Port mode registers 1, 2 (PM1, PM2)

12.3.1 Peripheral enable register 0 (PER0)

This register is used to enable or disable supplying the clock to the peripheral hardware. Clock supply to a hardware macro that is not used is stopped in order to reduce the power consumption and noise.

When the A/D converter is used, be sure to set bit 5 (ADCEN) of this register to 1.

The PER0 register can be set by a 1-bit or 8-bit memory manipulation instruction.

Reset signal generation clears this register to 00H.

Figure 12-2. Format of Peripheral Enable Register 0 (PER0)

Address: F00F0H After reset: 00H R/W

Symbol	<7>	6	<5>	<4>	<3>	<2>	1	<0>
PER0	RTCWEN	0	ADCEN	IICA0EN	SAU1EN	SAU0EN	0	TAU0EN

ADCEN	Control of A/D converter input clock supply
0	Stops input clock supply. ● SFR used by the A/D converter cannot be written. ● The A/D converter is in the reset status.
1	Enables input clock supply. ● SFR used by the A/D converter can be read/written.

Cautions 1. When setting the A/D converter, be sure to set the following registers first while the ADCEN bit is set to 1. If ADCEN = 0, the values of the A/D converter control registers are cleared to their initial values and writing to them is ignored (except for port mode registers 1, 2 (PM1, PM2), port mode control registers 1, 2 (PMC1, PMC2), and A/D port configuration register (ADPC)).

- **A/D converter mode register 0 (ADM0)**
- **A/D converter mode register 1 (ADM1)**
- **A/D converter mode register 2 (ADM2)**
- **10-bit A/D conversion result register (ADCR)**
- **8-bit A/D conversion result register (ADCRH)**
- **Analog input channel specification register (ADS)**
- **Conversion result comparison upper limit setting register (ADUL)**
- **Conversion result comparison lower limit setting register (ADLL)**
- **A/D test register (ADTES).**

2. Be sure to clear bits 1 and 6 to 0.

12.3.2 A/D converter mode register 0 (ADM0)

This register sets the conversion time for analog input to be A/D converted, and starts/stops conversion.

The ADM0 register can be set by a 1-bit or 8-bit memory manipulation instruction.

Reset signal generation clears this register to 00H.

Figure 12-3. Format of A/D Converter Mode Register 0 (ADM0)

Address: FFF30H After reset: 00H R/W

Symbol	<7>	6	5	4	3	2	1	<0>
ADM0	ADCS	0	FR2[Note 1]	FR1[Note 1]	FR0[Note 1]	LV1[Note 1]	LV0[Note 1]	ADCE

ADCS	A/D conversion operation control
0	Stops conversion operation [When read] Conversion stopped/standby status
1	Enables conversion operation [When read] While in the software trigger mode: Conversion operation status While in the hardware trigger wait mode: A/D power supply stabilization wait status + conversion operation status

ADCE	A/D voltage comparator operation control[Note 2]
0	Stops A/D voltage comparator operation
1	Enables A/D voltage comparator operation

Notes 1. For details of the FR2 to FR0, LV1, and LV0 bits, and A/D conversion, see **Table 12-3 A/D Conversion Time Selection**.

2. While in the software trigger mode or hardware trigger no-wait mode, the operation of the A/D voltage comparator is controlled by the ADCS and ADCE bits, and it takes 1 μs from the start of operation for the operation to stabilize. Therefore, when the ADCS bit is set to 1 after 1 μs or more has elapsed from the time ADCE bit is set to 1, the conversion result at that time has priority over the first conversion result. Otherwise, ignore data of the first conversion.

Cautions 1. Change the FR2 to FR0, LV1, and LV0 bits while conversion is stopped (ADCS = 0, ADCE = 0).

2. Do not set ADCS to 1 and ADCE to 0.

3. Do not change the ADCE and ADCS bits from 0 to 1 at the same time by using an 8-bit manipulation instruction. Be sure to set these bits in the order described in 12.7 A/D Converter Setup Flowchart.

4. Be sure to clear bit 6 to 0.

Table 12-1. Settings of ADCS and ADCE Bits

ADCS	ADCE	A/D Conversion Operation
0	0	Conversion stopped state
0	1	Conversion standby state
1	0	Setting prohibited
1	1	Conversion-in-progress state

Table 12-2. Setting and Clearing Conditions for ADCS Bit

A/D Conversion Mode		Set Conditions	Clear Conditions
Software trigger	Sequential conversion mode	When 1 is written to ADCS	When 0 is written to ADCS
	One-shot conversion mode		● When 0 is written to ADCS ● The bit is automatically cleared to 0 when A/D conversion ends.
Hardware trigger no-wait mode	Sequential conversion mode		When 0 is written to ADCS
	One-shot conversion mode		When 0 is written to ADCS
Hardware trigger wait mode	Sequential conversion mode	When a hardware trigger is input	When 0 is written to ADCS
	One-shot conversion mode		● When 0 is written to ADCS ● The bit is automatically cleared to 0 when A/D conversion ends.

Figure 12-4. Timing Chart When A/D Voltage Comparator Is Used

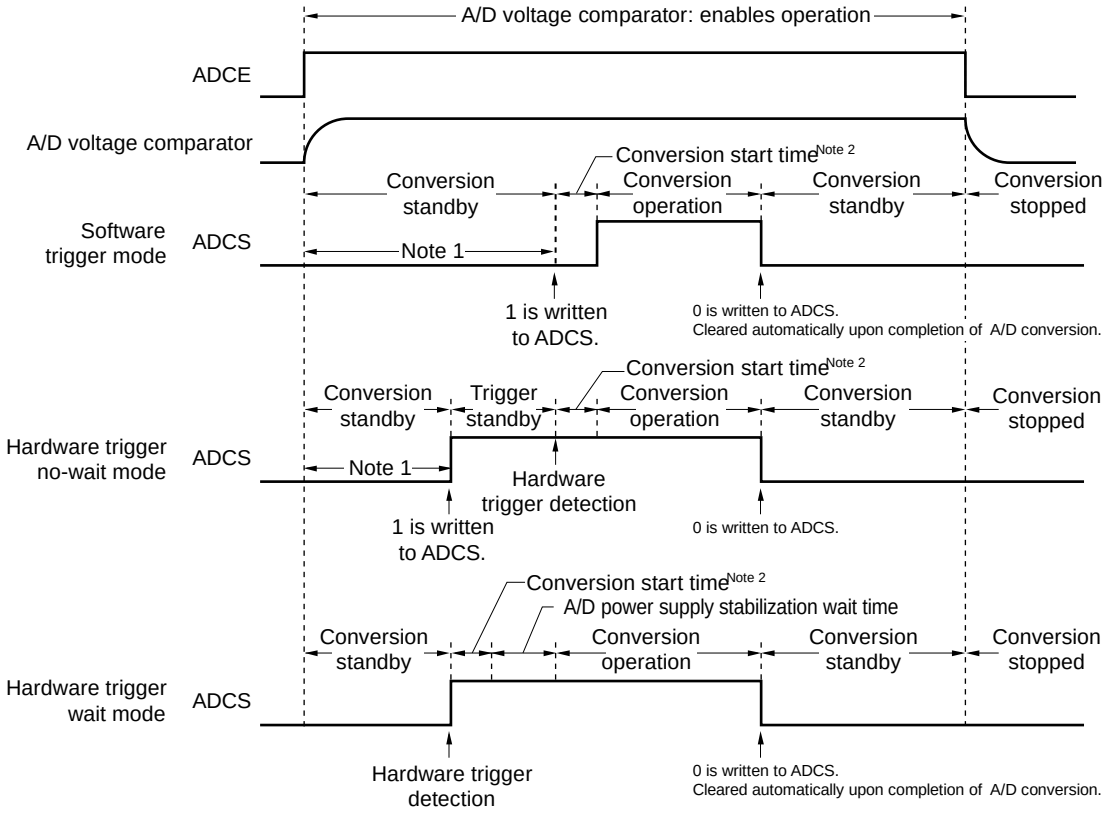

Notes 1. While in the software trigger mode or hardware trigger no-wait mode, the time from the rising of the ADCE bit to the rising of the ADCS bit must be 1 μs or longer to stabilize the internal circuit.

2. The following time (max.) is required until conversion starts:

ADM0			Conversion Clock (f_{AD})	Conversion Start Time (Number of f_{CLK} Clock Cycles)	
FR2	FR1	FR0		Software Trigger Mode/ Hardware Trigger No-wait Mode	Hardware Trigger Wait Mode
0	0	0	$f_{CLK}/64$	63	1
0	0	1	$f_{CLK}/32$	31	
0	1	0	$f_{CLK}/16$	15	
0	1	1	$f_{CLK}/8$	7	
1	0	0	$f_{CLK}/6$	5	
1	0	1	$f_{CLK}/5$	4	
1	1	0	$f_{CLK}/4$	3	
1	1	1	$f_{CLK}/2$	1	

However, for the second and subsequent conversion in sequential conversion mode, the conversion start time and stabilization wait time for A/D power supply do not occur after a hardware trigger is detected.

Cautions 1. If using the hardware trigger wait mode, setting the ADCS bit to 1 is prohibited (but the bit is automatically switched to 1 when the hardware trigger signal is detected). However, it is possible to clear the ADCS bit to 0 to specify the A/D conversion standby status.

2. While in the one-shot conversion mode of the hardware trigger no-wait mode, the ADCS flag is not automatically cleared to 0 when A/D conversion ends. Instead, 1 is retained.

3. Rewrite the value of the ADCE bit only when ADCS = 0 (conversion stopped or conversion is on standby).

Cautions 4. To complete A/D conversion, specify at least the following time as the hardware trigger interval:

Hardware trigger no wait mode: 2 f_{CLK} cycles + conversion start time + A/D conversion time

Hardware trigger wait mode: 2 f_{CLK} cycles + conversion start time + A/D power supply stabilization wait time + A/D conversion time

Remark f_{CLK}: CPU/peripheral hardware clock frequency

Table 12-3. A/D Conversion Time Selection (1/4)

(1) When there is no A/D power supply stabilization wait time

Normal mode 1, 2 (software trigger mode/hardware trigger no-wait mode)

A/D Converter Mode Register 0 (ADM0)					Mode	Conversion Clock (f_{AD})	Number of Conversion Clock Cycles[Note]	Conversion Time	Conversion Time Selection				
									2.7 V ≤ V_{DD} ≤ 5.5 V				
FR2	FR1	FR0	LV1	LV0					f_{CLK} = 1 MHz	f_{CLK} = 4 MHz	f_{CLK} = 8 MHz	f_{CLK} = 16 MHz	f_{CLK} = 24 MHz
0	0	0	0	0	Normal 1	f_{CLK}/64	19 f_{AD} (number of sampling clock cycles: 7 f_{AD})	1216/f_{CLK}	Setting prohibited	Setting prohibited	Setting prohibited	76 μs	50.6667 μs
0	0	1				f_{CLK}/32		608/f_{CLK}			76 μs	38 μs	25.3333 μs
0	1	0				f_{CLK}/16		304/f_{CLK}		76 μs	38 μs	19 μs	12.6667 μs
0	1	1				f_{CLK}/8		152/f_{CLK}		38 μs	19 μs	9.5 μs	6.3333 μs
1	0	0				f_{CLK}/6		114/f_{CLK}		28.5 μs	14.25 μs	7.125 μs	4.75 μs
1	0	1				f_{CLK}/5		95/f_{CLK}	95 μs	23.75 μs	11.875 μs	5.938 μs	3.9583 μs
1	1	0				f_{CLK}/4		76/f_{CLK}	76 μs	19 μs	9.5 μs	4.75 μs	3.1667 μs
1	1	1				f_{CLK}/2		38/f_{CLK}	38 μs	9.5 μs	4.75 μs	2.375 μs	Setting prohibited
0	0	0	0	1	Normal 2	f_{CLK}/64	17 f_{AD} (number of sampling clock cycles: 5 f_{AD})	1088/f_{CLK}	Setting prohibited	Setting prohibited	Setting prohibited	68 μs	45.3333 μs
0	0	1				f_{CLK}/32		544/f_{CLK}			68 μs	34 μs	22.6667 μs
0	1	0				f_{CLK}/16		272/f_{CLK}		68 μs	34 μs	17 μs	11.3333 μs
0	1	1				f_{CLK}/8		136/f_{CLK}		34 μs	17 μs	8.5 μs	5.6667 μs
1	0	0				f_{CLK}/6		102/f_{CLK}		25.5 μs	12.75 μs	6.375 μs	4.25 μs
1	0	1				f_{CLK}/5		85/f_{CLK}	85 μs	21.25 μs	10.625 μs	5.3125 μs	3.5417 μs
1	1	0				f_{CLK}/4		68/f_{CLK}	68 μs	17 μs	8.5 μs	4.25 μs	2.8333 μs
1	1	1				f_{CLK}/2		34/f_{CLK}	34 μs	8.5 μs	4.25 μs	2.125 μs	Setting prohibited

Note These are the numbers of clock cycles when conversion is with 10-bit resolution. When eight-bit resolution is selected, the values are shorter by two cycles of the conversion clock (f_{AD}).

Cautions 1. The A/D conversion time must also be within the relevant range of conversion times (t_{CONV}) described in 32.6.1 A/D converter characteristics or 33.6.1 A/D converter characteristics.

2. When rewriting the FR2 to FR0, LV1, and LV0 bits to other than the same data, make sure that conversion has stopped (ADCS = 0, ADCE = 0).

3. The above conversion time does not include conversion state time. Conversion state time add in the first conversion. Select conversion time, taking clock frequency errors into consideration.

Remark f_{CLK}: CPU/peripheral hardware clock frequency

Table 12-3. A/D Conversion Time Selection (2/4)

(2) When there is no A/D power supply stabilization wait time

Low-voltage mode 1, 2 (software trigger mode/hardware trigger no-wait mode)

A/D Converter Mode Register 0 (ADM0)					Mode	Conversion Clock (f_{AD})	Number of Conversion Clock Cycles[Note 4]	Conversion Time	Conversion Time Selection				
									1.6 V ≤ V_{DD} ≤ 5.5 V		**Note 1**	**Note 2**	**Note 3**
FR2	FR1	FR0	LV1	LV0					f_{CLK} = 1 MHz	f_{CLK} = 4 MHz	f_{CLK} = 8 MHz	f_{CLK} = 16 MHz	f_{CLK} = 24 MHz
0	0	0	1	0	Low-voltage 1	f_{CLK}/64	19 f_{AD} (number of sampling clock cycles: 7 f_{AD})	1216/f_{CLK}	Setting prohibited	Setting prohibited	Setting prohibited	76 μs	50.6667 μs
0	0	1				f_{CLK}/32		608/f_{CLK}			76 μs	38 μs	25.3333 μs
0	1	0				f_{CLK}/16		304/f_{CLK}		76 μs	38 μs	19 μs	12.6667 μs
0	1	1				f_{CLK}/8		152/f_{CLK}		38 μs	19 μs	9.5 μs	6.3333 μs
1	0	0				f_{CLK}/6		114/f_{CLK}		28.5 μs	14.25 μs	7.125 μs	4.75 μs
1	0	1				f_{CLK}/5		95/f_{CLK}	95 μs	23.75 μs	11.875 μs	5.938 μs	3.9587 μs
1	1	0				f_{CLK}/4		76/f_{CLK}	76 μs	19 μs	9.5 μs	4.75 μs	3.1667 μs
1	1	1				f_{CLK}/2		38/f_{CLK}	38 μs	9.5 μs	4.75 μs	2.375 μs	Setting prohibited
0	0	0	1	1	Low-voltage 2	f_{CLK}/64	17 f_{AD} (number of sampling clock cycles: 5 f_{AD})	1088/f_{CLK}	Setting prohibited	Setting prohibited	Setting prohibited	68 μs	45.3333 μs
0	0	1				f_{CLK}/32		544/f_{CLK}			68 μs	34 μs	22.6667 μs
0	1	0				f_{CLK}/16		272/f_{CLK}		68 μs	34 μs	17 μs	11.3333 μs
0	1	1				f_{CLK}/8		136/f_{CLK}		34 μs	17 μs	8.5 μs	5.6667 μs
1	0	0				f_{CLK}/6		102/f_{CLK}		25.5 μs	12.75 μs	6.375 μs	4.25 μs
1	0	1				f_{CLK}/5		85/f_{CLK}	85 μs	21.25 μs	10.625 μs	5.3125 μs	3.5417 μs
1	1	0				f_{CLK}/4		68/f_{CLK}	68 μs	17 μs	8.5 μs	4.25 μs	2.8333 μs
1	1	1				f_{CLK}/2		34/f_{CLK}	34 μs	8.5 μs	4.25 μs	2.125 μs	Setting prohibited

Notes 1. 1.8 V ≤ V_{DD} ≤ 5.5 V

2. 2.4 V ≤ V_{DD} ≤ 5.5 V

3. 2.7 V ≤ V_{DD} ≤ 5.5 V

4. These are the numbers of clock cycles when conversion is with 10-bit resolution. When eight-bit resolution is selected, the values are shorter by two cycles of the conversion clock (f_{AD}).

Cautions 1. The A/D conversion time must also be within the relevant range of conversion times (t_{CONV}) described in 32.6.1 A/D converter characteristics or 33.6.1 A/D converter characteristics.

2. When rewriting the FR2 to FR0, LV1, and LV0 bits to other than the same data, make sure that conversion has stopped (ADCS = 0, ADCE = 0).

3. The above conversion time does not include conversion state time. Conversion state time add in the first conversion. Select conversion time, taking clock frequency errors into consideration.

Remark f_{CLK}: CPU/peripheral hardware clock frequency

Table 12-3. A/D Conversion Time Selection (3/4)

(3) When there is A/D power supply stabilization wait time

Normal mode 1, 2 (hardware trigger wait mode[Note 1])

A/D Converter Mode Register 0 (ADM0)					Mode	Conversion Clock (f_{AD})	Number of Stabilization Wait Clock	Number of Conversion Clock Cycles[Note 2]	Stabilization Wait Clock + Conversion Time	Conversion Time Selection				
										2.7 V ≤ V_{DD} ≤ 5.5 V				
FR2	FR1	FR0	LV1	LV0						f_{CLK} = 1 MHz	f_{CLK} = 4 MHz	f_{CLK} = 8 MHz	f_{CLK} = 16 MHz	f_{CLK} = 24 MHz
0	0	0	0	0	Normal 1	f_{CLK}/64	8 f_{AD}	19 f_{AD} (number of sampling clock cycles: 7 f_{AD})	1728/f_{CLK}	Setting prohibited	Setting prohibited	Setting prohibited	108 μs	72 μs
0	0	1				f_{CLK}/32			864/f_{CLK}			108 μs	54 μs	36 μs
0	1	0				f_{CLK}/16			432/f_{CLK}		108 μs	54 μs	27 μs	18 μs
0	1	1				f_{CLK}/8			216/f_{CLK}		54 μs	27 μs	13.5 μs	9 μs
1	0	0				f_{CLK}/6			162/f_{CLK}		40.5 μs	20.25 μs	10.125 μs	6.75 μs
1	0	1				f_{CLK}/5			135/f_{CLK}	135 μs	33.75 μs	16.875 μs	8.4375 μs	5.625 μs
1	1	0				f_{CLK}/4			108/f_{CLK}	108 μs	27 μs	13.5 μs	6.75 μs	4.5 μs
1	1	1				f_{CLK}/2			54/f_{CLK}	54 μs	13.5 μs	6.75 μs	3.375 μs	Setting prohibited
0	0	0	0	1	Normal 2	f_{CLK}/64	8 f_{AD}	17 f_{AD} (number of sampling clock cycles: 5 f_{AD})	1600/f_{CLK}	Setting prohibited	Setting prohibited	Setting prohibited	100 μs	66.6667 μs
0	0	1				f_{CLK}/32			800/f_{CLK}			100 μs	50 μs	33.3333 μs
0	1	0				f_{CLK}/16			400/f_{CLK}		100 μs	50 μs	25 μs	16.6667 μs
0	1	1				f_{CLK}/8			200/f_{CLK}		50 μs	25 μs	12.5 μs	8.3333 μs
1	0	0				f_{CLK}/6			150/f_{CLK}		37.5 μs	18.75 μs	9.375 μs	6.25 μs
1	0	1				f_{CLK}/5			125/f_{CLK}	125 μs	31.25 μs	15.625 μs	7.8125 μs	5.2083 μs
1	1	0				f_{CLK}/4			100/f_{CLK}	100 μs	25 μs	12.5 μs	6.25 μs	4.1667 μs
1	1	1				f_{CLK}/2			50/f_{CLK}	50 μs	12.5 μs	6.25 μs	3.125 μs	Setting prohibited

Notes 1. For the second and subsequent conversion in sequential conversion mode, the conversion start time and stabilization wait time for A/D power supply do not occur after a hardware trigger is detected (see **Table 12-3 (1/4)**).

2. These are the numbers of clock cycles when conversion is with 10-bit resolution. When eight-bit resolution is selected, the values are shorter by two cycles of the conversion clock (f_{AD}).

Cautions 1. The A/D conversion time must also be within the relevant range of conversion times (t_{CONV}) described in 32.6.1 A/D converter characteristics or 33.6.1 A/D converter characteristics.

2. When rewriting the FR2 to FR0, LV1, and LV0 bits to other than the same data, make sure that conversion has stopped (ADCS = 0, ADCE = 0).

3. The above conversion time does not include conversion state time. Conversion state time add in the first conversion. Select conversion time, taking clock frequency errors into consideration.

4. When hardware trigger wait mode, specify the conversion time, including the stabilization wait time from the hardware trigger detection.

Remark f_{CLK}: CPU/peripheral hardware clock frequency

Table 12-3. A/D Conversion Time Selection (4/4)

(4) When there is A/D power supply stabilization wait time

Low-voltage mode 1, 2 (hardware trigger wait mode[Note 1])

A/D Converter Mode Register 0 (ADM0)					Mode	Conversion Clock (f_{AD})	Number of Stabilization Wait Clock	Number of Conversion Clock Cycles[Note 5]	Stabilization Wait Clock + Conversion Time	Conversion Time Selection				
										1.6 V ≤ V_{DD} ≤ 5.5 V		**Note 2**	**Note 3**	**Note 4**
FR2	FR1	FR0	LV1	LV0						f_{CLK} = 1 MHz	f_{CLK} = 4 MHz	f_{CLK} = 8 MHz	f_{CLK} = 16 MHz	f_{CLK} = 24 MHz
0	0	0	0	0	Low voltage 1	f_{CLK}/64	2 f_{AD}	19 f_{AD} (number of sampling clock cycles: 7 f_{AD})	1344/f_{CLK}	Setting prohibited	Setting prohibited	Setting prohibited	84 μs	56 μs
0	0	1				f_{CLK}/32			672/f_{CLK}			84 μs	42 μs	28 μs
0	1	0				f_{CLK}/16			336/f_{CLK}		84 μs	42 μs	21 μs	14 μs
0	1	1				f_{CLK}/8			168/f_{CLK}		42 μs	21 μs	10.5 μs	7 μs
1	0	0				f_{CLK}/6			126/f_{CLK}		31.25 μs	15.75 μs	7.875 μs	5.25 μs
1	0	1				f_{CLK}/5			105/f_{CLK}	105 μs	26.25 μs	13.125 μs	6.5625 μs	4.375 μs
1	1	0				f_{CLK}/4			84/f_{CLK}	84 μs	21 μs	10.5 μs	5.25 μs	3.5 μs
1	1	1				f_{CLK}/2			42/f_{CLK}	42 μs	10.5 μs	5.25 μs	2.625 μs	Setting prohibited
0	0	0	0	1	Low voltage 2	f_{CLK}/64	2 f_{AD}	17 f_{AD} (number of sampling clock cycles: 5 f_{AD})	1216/f_{CLK}	Setting prohibited	Setting prohibited	Setting prohibited	76 μs	50.6667 μs
0	0	1				f_{CLK}/32			608/f_{CLK}			76 μs	38 μs	25.3333 μs
0	1	0				f_{CLK}/16			304/f_{CLK}		76 μs	38 μs	19 μs	12.6667 μs
0	1	1				f_{CLK}/8			152/f_{CLK}		38 μs	19 μs	9.5 μs	6.3333 μs
1	0	0				f_{CLK}/6			114/f_{CLK}		28.5 μs	14.25 μs	7.125 μs	4.75 μs
1	0	1				f_{CLK}/5			96/f_{CLK}	96 μs	23.75 μs	12 μs	5.938 μs	4.0 μs
1	1	0				f_{CLK}/4			76/f_{CLK}	76 μs	19 μs	9.5 μs	4.75 μs	3.1667 μs
1	1	1				f_{CLK}/2			38/f_{CLK}	38 μs	9.5 μs	4.75 μs	2.375 μs	Setting prohibited

Notes 1. For the second and subsequent conversion in sequential conversion mode, the conversion start time and stabilization wait time for A/D power supply do not occur after a hardware trigger is detected (see **Table 12-3 (2/4)**).

2. 1.8 V ≤ V_{DD} ≤ 5.5 V

3. 2.4 V ≤ V_{DD} ≤ 5.5 V

4. 2.7 V ≤ V_{DD} ≤ 5.5 V

5. These are the numbers of clock cycles when conversion is with 10-bit resolution. When eight-bit resolution is selected, the values are shorter by two cycles of the conversion clock (f_{AD}).

Cautions 1. The A/D conversion time must also be within the relevant range of conversion times (t_{CONV}) described in 32.6.1 A/D converter characteristics or 33.6.1 A/D converter characteristics.

2. When rewriting the FR2 to FR0, LV1, and LV0 bits to other than the same data, make sure that conversion has stopped (ADCS = 0, ADCE = 0).

3. The above conversion time does not include conversion state time. Conversion state time add in the first conversion. Select conversion time, taking clock frequency errors into consideration.

4. When hardware trigger wait mode, specify the conversion time, including the stabilization wait time from the hardware trigger detection.

Remark f_{CLK}: CPU/peripheral hardware clock frequency

Figure 12-5. A/D Converter Sampling and A/D Conversion Timing (Example for Software Trigger Mode)

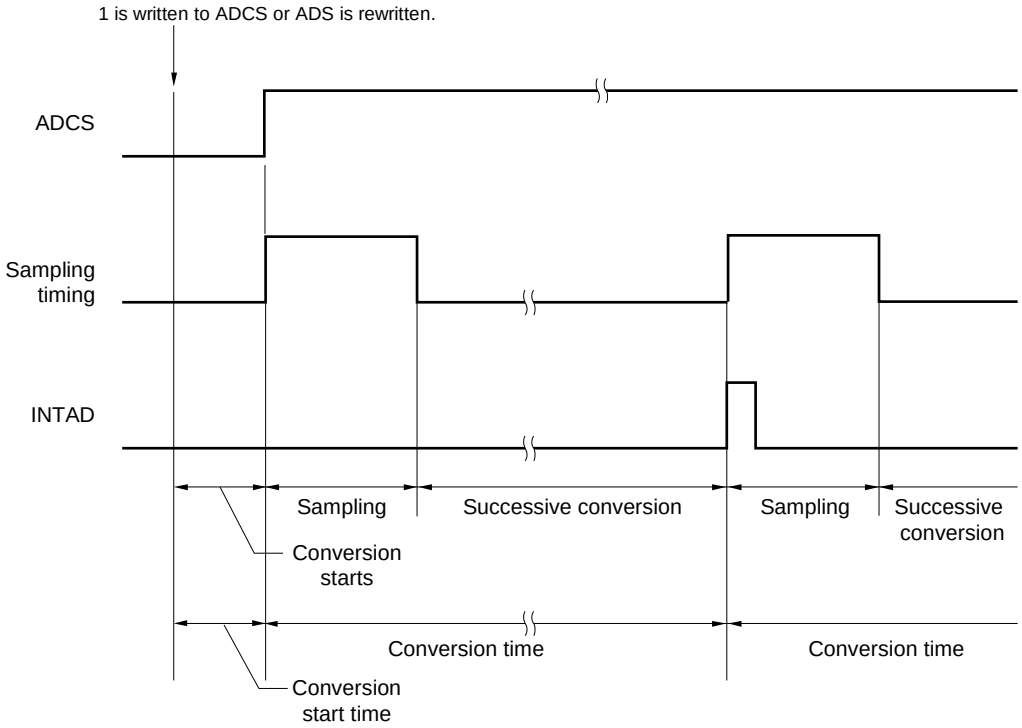

12.3.3 A/D converter mode register 1 (ADM1)

This register is used to specify the A/D conversion trigger, conversion mode, and hardware trigger signal.

The ADM1 register can be set by a 1-bit or 8-bit memory manipulation instruction.

Reset signal generation clears this register to 00H.

Figure 12-6. Format of A/D Converter Mode Register 1 (ADM1)

Address: FFF32H After reset: 00H R/W

Symbol	7	6	5	4	3	2	1	0
ADM1	ADTMD1	ADTMD0	ADSCM	0	0	0	ADTRS1	ADTRS0

ADTMD1	ADTMD0	Selection of the A/D conversion trigger mode
0	×	Software trigger mode
1	0	Hardware trigger no-wait mode
1	1	Hardware trigger wait mode

ADSCM	Specification of the A/D conversion mode
0	Sequential conversion mode
1	One-shot conversion mode

ADTRS1	ADTRS0	Selection of the hardware trigger signal
0	0	End of timer channel 01 count or capture interrupt signal (INTTM01)
0	1	Setting prohibited
1	0	Real-time clock 2 interrupt signal (INTRTC)
1	1	12-bit interval timer interrupt signal (INTIT)

Cautions 1. Only rewrite the value of the ADM1 register while conversion operation is stopped (which is indicated by the ADCS bit of A/D converter mode register 0 (ADM0) being 0).

2. To complete A/D conversion, specify at least the following time as the hardware trigger interval:
Hardware trigger no wait mode: 2 f_{CLK} cycles + conversion start time + A/D conversion time
Hardware trigger wait mode: 2 f_{CLK} cycles + conversion start time + A/D power supply stabilization wait time + A/D conversion time

3. In modes other than SNOOZE mode, input of the next INTRTC or INTIT will not be recognized as a valid hardware trigger for up to four f_{CLK} cycles after the first INTRTC or INTIT is input.

Remarks 1. ×: don't care

2. f_{CLK}: CPU/peripheral hardware clock frequency

12.3.4 A/D converter mode register 2 (ADM2)

This register is used to select the A/D converter reference voltage, check the upper limit and lower limit A/D conversion result values, select the resolution, and specify whether to use the SNOOZE mode.

The ADM2 register can be set by a 1-bit or 8-bit memory manipulation instruction.

Reset signal generation clears this register to 00H.

Figure 12-7. Format of A/D Converter Mode Register 2 (ADM2) (1/2)

Address: F0010H After reset: 00H R/W

Symbol	7	6	5	4	<3>	<2>	1	<0>
ADM2	ADREFP1	ADREFP0	ADREFM	0	ADRCK	AWC	0	ADTYP

ADREFP1	ADREFP0	Selection of the + side reference voltage of the A/D converter
0	0	Supplied from V_{DD}
0	1	Supplied from P21/AV_{REFP}/ANI0
1	0	Supplied from the internal reference voltage (1.45 V)[Note]
1	1	Setting prohibited

- When ADREFP1 or ADREFP0 bit is rewritten, this must be configured in accordance with the following procedures.
  (1) Set ADCE = 0
  (2) Change the values of ADREFP1 and ADREFP0
  (3) Reference voltage stabilization wait time (A)
  (4) Set ADCE = 1
  (5) Reference voltage stabilization wait time (B)
  When ADREFP1 and ADREFP0 are set to 1 and 0, the setting is changed to A = 5 μs, B = 1 μs.
  When ADREFP1 and ADREFP0 are set to 0 and 0 or 0 and 1, A needs no wait and B = 1 μs.
  After (5) stabilization time, start the A/D conversion.
- When ADREFP1 and ADREFP0 are set to 1 and 0, respectively, A/D conversion cannot be performed on the temperature sensor output voltage and internal reference voltage (1.45 V).
  Be sure to perform A/D conversion while ADISS = 0.

ADREFM	Selection of the – side reference voltage of the A/D converter
0	Supplied from V_{SS}
1	Supplied from P20/AV_{REFM}/ANI1

Note This setting can be used only in HS (high-speed main) mode.

Cautions 1. Rewrite the value of the ADM2 register while conversion is stopped (ADCS = 0, ADCE = 0).

2. Do not set the ADREFP1 bit to 1 when shifting to STOP mode, or to HALT mode while the CPU is operating on the subsystem clock. When the internal reference voltage is selected (ADREFP1, ADREFP0 = 1, 0), the A/D converter reference voltage current (I_{ADREF}) indicated in 32.3.2 Supply current characteristics or 33.3.2 Supply current characteristics will be added.

3. When using AV_{REFP} and AV_{REFM}, specify ANI0 and ANI1 as the analog input channels and specify input mode by using the port mode register.

Figure 12-7. Format of A/D Converter Mode Register 2 (ADM2) (2/2)

Address: F0010H After reset: 00H R/W

Symbol	7	6	5	4	<3>	<2>	1	<0>
ADM2	ADREFP1	ADREFP0	ADREFM	0	ADRCK	AWC	0	ADTYP

ADRCK	Checking the upper limit and lower limit conversion result values
0	The interrupt signal (INTAD) is output when the ADLL register ≤ the ADCR register ≤ the ADUL register (AREA 1).
1	The interrupt signal (INTAD) is output when the ADCR register < the ADLL register (AREA 2) or the ADUL register < the ADCR register (AREA 3).
Figure 12-8 shows the generation range of the interrupt signal (INTAD) for AREA 1 to AREA 3.	

AWC	Specification of the SNOOZE mode
0	Do not use the SNOOZE mode function.
1	Use the SNOOZE mode function.

When there is a hardware trigger signal in the STOP mode, the STOP mode is exited, and A/D conversion is performed without operating the CPU (the SNOOZE mode).

- The SNOOZE mode function can only be specified when the high-speed on-chip oscillator clock is selected for the CPU/peripheral hardware clock (f_{CLK}). If any other clock is selected, specifying this mode is prohibited.
- Using the SNOOZE mode function in the software trigger mode or hardware trigger no-wait mode is prohibited.
- Using the SNOOZE mode function in the sequential conversion mode is prohibited.
- When using the SNOOZE mode function, specify a hardware trigger interval of at least “shift time to SNOOZE mode[Note] + conversion start time + A/D power supply stabilization wait time + A/D conversion time +2 f_{CLK} clock”
- Even when using SNOOZE mode, be sure to set the AWC bit to 0 in normal operation mode and change it to 1 just before shifting to STOP mode.
  Also, be sure to change the AWC bit to 0 after returning from STOP mode to normal operation mode.
  If the AWC bit is left set to 1, A/D conversion will not start normally in spite of the subsequent SNOOZE or normal operation mode.

ADTYP	Selection of the A/D conversion resolution
0	10-bit resolution
1	8-bit resolution

Note See “From STOP to SNOOZE” in **21.3.3 SNOOZE mode**.

Caution Only rewrite the value of the ADM2 register while conversion operation is stopped (ADCS = 0, ADCE = 0).

Figure 12-8. ADRCK Bit Interrupt Signal Generation Range

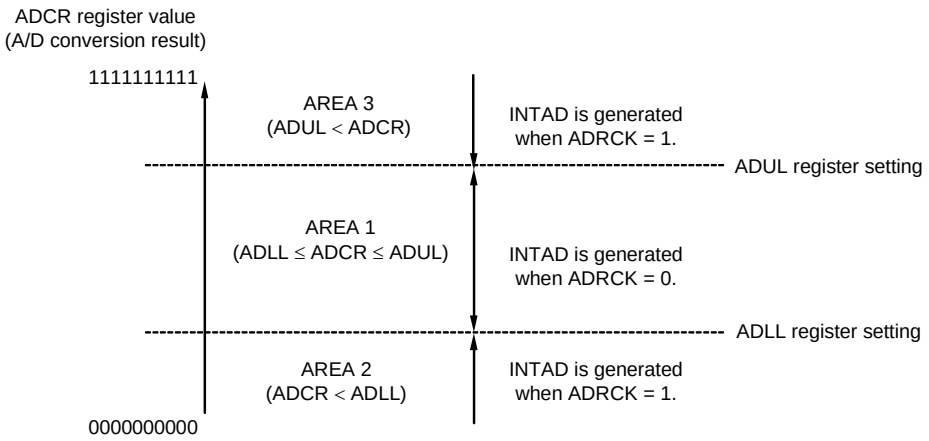

Remark If INTAD does not occur, the A/D conversion result is not stored in the ADCR or ADCRH register.

12.3.5 10-bit A/D conversion result register (ADCR)

This register is a 16-bit register that stores the A/D conversion result. The lower 6 bits are fixed to 0. Each time A/D conversion ends, the conversion result is loaded from the successive approximation register (SAR). The higher 8 bits of the conversion result are stored in FFF1FH and the lower 2 bits are stored in the higher 2 bits of FFF1EH [Note].

The ADCR register can be read by a 16-bit memory manipulation instruction.

Reset signal generation clears this register to 0000H.

Note If the A/D conversion result is outside the range specified by using the A/D conversion comparison function (the value specified by the ADRCK bit of the ADM2 register and ADUL/ADLL registers; see **Figure 12-8**), the result is not stored.

Figure 12-9. Format of 10-bit A/D Conversion Result Register (ADCR)

Address: FFF1FH, FFF1EH After reset: 0000H R

Symbol	FFF1FH								FFF1EH							
ADCR											0	0	0	0	0	0

Cautions 1. When 8-bit resolution A/D conversion is selected (when the ADTYP bit of A/D converter mode register 2 (ADM2) is 1) and the ADCR register is read, 0 is read from the lower two bits (bits 7 and 6 of the ADCR register).

2. When the ADCR register is accessed in 16-bit units, the higher 10 bits of the conversion result are read in order starting at bit 15.

12.3.6 8-bit A/D conversion result register (ADCRH)

This register is an 8-bit register that stores the A/D conversion result. The higher 8 bits of 10-bit resolution are stored [Note].

The ADCRH register can be read by an 8-bit memory manipulation instruction.

Reset signal generation clears this register to 00H.

Note If the A/D conversion result is outside the range specified by using the A/D conversion comparison function (the value specified by the ADRCK bit of the ADM2 register and ADUL/ADLL registers; see **Figure 12-8**), the result is not stored.

Figure 12-10. Format of 8-bit A/D Conversion Result Register (ADCRH)

Address: FFF1FH After reset: 00H R

Symbol	7	6	5	4	3	2	1	0
ADCRH								

Caution When writing to the A/D converter mode register 0 (ADM0), analog input channel specification register (ADS), and A/D port configuration register (ADPC), the contents of the ADCRH register may become undefined. Read the conversion result following conversion completion before writing to the ADM0, ADS, and ADPC registers. Using timing other than the above may cause an incorrect conversion result to be read.

12.3.7 Analog input channel specification register (ADS)

This register specifies the input channel of the analog voltage to be A/D converted.

The ADS register can be set by a 1-bit or 8-bit memory manipulation instruction.

Reset signal generation clears this register to 00H.

Figure 12-11. Format of Analog Input Channel Specification Register (ADS)

Address: FFF31H After reset: 00H R/W

Symbol	7	6	5	4	3	2	1	0
ADS	ADISS	0	0	ADS4	ADS3	ADS2	ADS1	ADS0

ADISS	ADS4	ADS3	ADS2	ADS1	ADS0	Analog input channel	Input source
0	0	0	0	0	0	ANI0	P21/ANI0/AV_{REFP} pin
0	0	0	0	0	1	ANI1	P20/ANI1/AV_{REFM} pin
0	1	0	0	0	0	ANI16	P22/ANI16 pin
0	1	0	0	0	1	ANI17	P23/ANI17 pin
0	1	0	0	1	0	ANI18	P24/ANI18 pin
0	1	0	0	1	1	ANI19	P25/ANI19 pin
0	1	0	1	0	0	ANI20	P26/ANI20 pin
0	1	0	1	0	1	ANI21	P27/ANI21 pin
0	1	0	1	1	0	ANI22	P10/ANI22 pin
0	1	0	1	1	1	ANI23	P11/ANI23 pin
0	1	1	0	0	0	ANI24	P12/ANI24 pin
0	1	1	0	0	1	ANI25	P13/ANI25 pin
1	0	0	0	0	0	–	Temperature sensor output[Note1,2]
1	0	0	0	0	1	–	Internal reference voltage (1.45 V)[Note1]
Other than above						Setting prohibited	

Note1. This setting can be used only in HS (high-speed main) mode.

<R> **2.** If the internal reference voltage (1.45 V) is selected as the reference voltage of comparator 0 or comparator 1, the temperature sensor output cannot be selected.

Cautions 1. Be sure to clear bits 5 and 6 to 0.

2. Set a channel to be set the analog input by ADPC and PMC registers in the input mode by using port mode registers 1, 2 (PM1, PM2).

3. Do not set the pin that is set by the A/D port configuration register (ADPC) as digital I/O by the ADS register.

4. Do not set the pin that is set by port mode control registers 1, 2 (PMC1, PMC2) as digital I/O by the ADS register.

5. Only rewrite the value of the ADISS bit while conversion operation is stopped (which is indicated by the ADCE bit of A/D voltage cooperator mode register 0 (ADM0) being 0).

6. If using AV_{REFP} as the + side reference voltage of the A/D converter, do not select ANI0 as an A/D conversion channel.

7. If using AV_{REFM} as the – side reference voltage of the A/D converter, do not select ANI1 as an A/D conversion channel.

Cautions 8. If ADISS is set to 1, the internal reference voltage (1.45 V) cannot be used for the + side reference voltage. After the ADISS bit is set to 1, the initial conversion result cannot be used. For the setting flow, see 12.7.4 Setup when using temperature sensor (example for software trigger mode and one-shot conversion mode).

9. Do not set the ADISS bit to 1 when shifting to STOP mode, or to HALT mode while the CPU is operating on the subsystem clock. Also, if the ADREFP1 bit is set to 1, the A/D converter reference voltage current (I_{ADREF}) indicated in 32.3.2 Supply current characteristics will be added to the current consumption when shifting to HALT mode while the CPU is operating on the main system clock.

10. Ignore the conversion result if the corresponding ANI pin does not exist in the product used.

Remark ×: don't care

12.3.8 Conversion result comparison upper limit setting register (ADUL)

This register is used to specify the setting for checking the upper limit of the A/D conversion results.

The A/D conversion results and ADUL register value are compared, and interrupt signal (INTAD) generation is controlled in the range specified for the ADRCK bit of A/D converter mode register 2 (ADM2) (shown in **Figure 12-8**).

The ADUL register can be set by an 8-bit memory manipulation instruction.

Reset signal generation sets this register to FFH.

Caution When 10-bit resolution A/D conversion is selected, the higher eight bits of the 10-bit A/D conversion result register (ADCR) are compared with the ADUL register.

Figure 12-12. Format of Conversion Result Comparison Upper Limit Setting Register (ADUL)

Address: F0011H After reset: FFH R/W

Symbol	7	6	5	4	3	2	1	0
ADUL	ADUL7	ADUL6	ADUL5	ADUL4	ADUL3	ADUL2	ADUL1	ADUL0

12.3.9 Conversion result comparison lower limit setting register (ADLL)

This register is used to specify the setting for checking the lower limit of the A/D conversion results.

The A/D conversion results and ADLL register value are compared, and interrupt signal (INTAD) generation is controlled in the range specified for the ADRCK bit of A/D converter mode register 2 (ADM2) (shown in **Figure 12-8**).

The ADLL register can be set by an 8-bit memory manipulation instruction.

Reset signal generation clears this register to 00H.

Figure 12-13. Format of Conversion Result Comparison Lower Limit Setting Register (ADLL)

Address: F0012H After reset: 00H R/W

Symbol	7	6	5	4	3	2	1	0
ADLL	ADLL7	ADLL6	ADLL5	ADLL4	ADLL3	ADLL2	ADLL1	ADLL0

Cautions 1. When 10-bit resolution A/D conversion is selected, the higher eight bits of the 10-bit A/D conversion result register (ADCR) are compared with the ADLL register.

2. Only write new values to the ADUL and ADLL registers while conversion is stopped (ADCS = 0, ADCE = 0).

3. The setting of the ADUL registers must be greater than that of the ADLL register.

12.3.10 A/D test register (ADTES)

This register is used to select the + side reference voltage or – side reference voltage for the converter, an analog input channel (ANIxx), the temperature sensor output voltage, or the internal reference voltage (1.45 V) as the target for A/D conversion.

When using this register to test the converter, set as follows.

- For zero-scale measurement, select the – side reference voltage as the target for conversion.
- For full-scale measurement, select the + side reference voltage as the target for conversion.

The ADTES register can be set by an 8-bit memory manipulation instruction.

Reset signal generation clears this register to 00H.

Figure 12-14. Format of A/D Test Register (ADTES)

Address: F0013H After reset: 00H R/W

Symbol	7	6	5	4	3	2	1	0
ADTES	0	0	0	0	0	0	ADTES1	ADTES0

ADTES1	ADTES0	A/D conversion target
0	0	ANIxx/temperature sensor output voltage[Note]/internal reference voltage (1.45 V)[Note] (This is specified using the analog input channel specification register (ADS).)
1	0	The – side reference voltage (selected by the ADREFM bit of the ADM2 register)
1	1	The + side reference voltage (selected by the ADREFP1 or ADREFP0 bit of the ADM2 register)
Other than above		Setting prohibited

Note The temperature sensor output voltage and internal reference voltage (1.45 V) can be selected only in the HS (high-speed main) mode.

12.3.11 Registers controlling port function of analog input pins

Set up the registers for controlling the functions of the ports shared with the analog input pins of the A/D converter (port mode registers (PMxx), port mode control registers (PMCxx), and A/D port configuration register (ADPC)). For details, see **4.3.1 Port mode registers (PMxx)**, **4.3.6 Port mode control registers (PMCxx)**, and **4.3.7 A/D port configuration register (ADPC)**.

When using the ANI0 and ANI1 pins for analog input of the A/D converter, set the port mode register (PMxx) bit corresponding to each port to 1 and select analog input through the A/D port configuration register (ADPC).

When using the ANI16 to ANI25 pins for analog input of the A/D converter, set the port mode register (PMxx) bit and port mode control register (PMCxx) bit corresponding to each port to 1.

12.4 A/D Converter Conversion Operations

The A/D converter conversion operations are described below.

<1> The voltage input to the selected analog input channel is sampled by the sample & hold circuit.

<2> When sampling has been done for a certain time, the sample & hold circuit is placed in the hold state and the sampled voltage is held until the A/D conversion operation has ended.

<3> Bit 9 of the successive approximation register (SAR) is set. The series resistor string voltage tap is set to (1/2) AV_{REF} by the tap selector.

<4> The voltage difference between the series resistor string voltage tap and sampled voltage is compared by the voltage comparator. If the analog input is greater than (1/2) AV_{REF}, the MSB bit of the SAR register remains set to 1. If the analog input is smaller than (1/2) AV_{REF}, the MSB bit is reset to 0.

<5> Next, bit 8 of the SAR register is automatically set to 1, and the operation proceeds to the next comparison. The series resistor string voltage tap is selected according to the preset value of bit 9, as described below.

- Bit 9 = 1: (3/4) AV_{REF}
- Bit 9 = 0: (1/4) AV_{REF}

The voltage tap and sampled voltage are compared and bit 8 of the SAR register is manipulated as follows.

- Sampled voltage ≥ Voltage tap: Bit 8 = 1
- Sampled voltage < Voltage tap: Bit 8 = 0

<6> Comparison is continued in this way up to bit 0 of the SAR register.

<7> Upon completion of the comparison of 10 bits, an effective digital result value remains in the SAR register, and the result value is transferred to the A/D conversion result register (ADCR, ADCRH) and then latched [Note 1].
At the same time, the A/D conversion end interrupt request (INTAD) can also be generated [Note 1].

<8> Repeat steps <1> to <7>, until the ADCS bit is cleared to 0[Note 2].
To stop the A/D converter, clear the ADCS bit to 0.

Notes 1. If the A/D conversion result is outside the A/D conversion result range specified by the ADRCK bit and the ADUL and ADLL registers (see **Figure 12-8**), the A/D conversion result interrupt request signal is not generated and no A/D conversion results are stored in the ADCR and ADCRH registers.

2. While in the sequential conversion mode, the ADCS flag is not automatically cleared to 0. This flag is not automatically cleared to 0 while in the one-shot conversion mode of the hardware trigger no-wait mode, either. Instead, 1 is retained.

Remarks 1. Two types of the A/D conversion result registers are available.

- ADCR register (16 bits): Store 10-bit A/D conversion value
- ADCRH register (8 bits): Store 8-bit A/D conversion value

2. AV_{REF}: The + side reference voltage of the A/D converter. This can be selected from AV_{REFP}, the internal reference voltage (1.45 V), and V_{DD}.

Figure 12-15. Conversion Operation of A/D Converter (Software Trigger Mode)

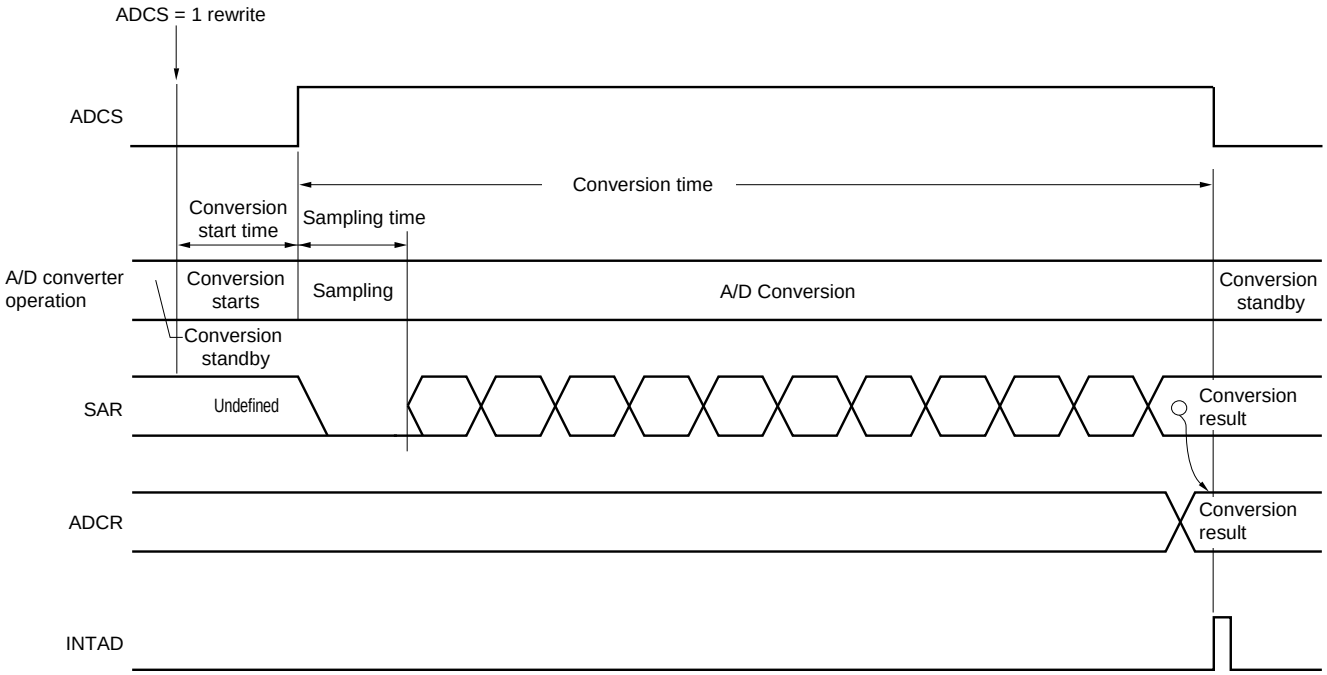

In one-shot conversion mode, the ADCS bit is automatically cleared to 0 after completion of A/D conversion.

In sequential conversion mode, A/D conversion operations proceed continuously until the software clears bit 7 (ADCS) of the A/D converter mode register 0 (ADM0) to 0.

When the value of the analog input channel specification register (ADS) is rewritten or overwritten during conversion, the current A/D conversion is interrupted, and A/D conversion is performed on the analog input newly specified in the ADS register. The partially converted data is discarded.

Reset signal generation clears the A/D conversion result register (ADCR, ADCRH) to 0000H or 00H.

12.5 Input Voltage and Conversion Results

The relationship between the analog input voltage input to the analog input pins (ANI0, ANI1, ANI16 to ANI25) and the theoretical A/D conversion result (stored in the 10-bit A/D conversion result register (ADCR)) is shown by the following expression.

$$SAR = INT\left(\frac{V_{AIN}}{AV_{REF}} \times 1024 + 0.5\right)$$

$$ADCR = SAR \times 64$$

or

$$\left(\frac{ADCR}{64} - 0.5\right) \times \frac{AV_{REF}}{1024} \leq V_{AIN} < \left(\frac{ADCR}{64} + 0.5\right) \times \frac{AV_{REF}}{1024}$$

where, INT( ): Function which returns integer part of value in parentheses

V_{AIN}: Analog input voltage

AV_{REF}: AV_{REF} pin voltage

ADCR: A/D conversion result register (ADCR) value

SAR: Successive approximation register

Figure 12-16 shows the relationship between the analog input voltage and the A/D conversion result.

Figure 12-16. Relationship Between Analog Input Voltage and A/D Conversion Result

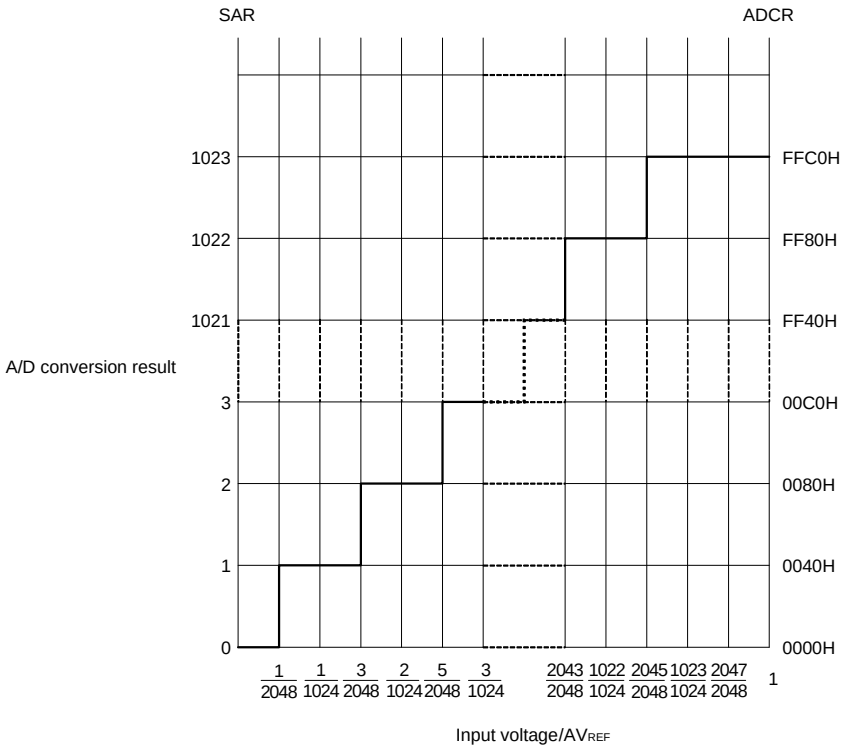

Remark AV_{REF}: The + side reference voltage of the A/D converter. This can be selected from AV_{REFP}, the internal reference voltage (1.45 V), and V_{DD}.

12.6 A/D Converter Operation Modes

The operation of each A/D converter mode is described below. In addition, the procedure for specifying each mode is described in **12.7 A/D Converter Setup Flowchart**.

12.6.1 Software trigger mode (sequential conversion mode)

<1> In the stop status, the ADCE bit of A/D converter mode register 0 (ADM0) is set to 1, and the system enters the A/D conversion standby status.

<2> After the software counts up to the stabilization wait time (1 μs), the ADCS bit of the ADM0 register is set to 1 to perform the A/D conversion of the analog input specified by the analog input channel specification register (ADS).

<3> When A/D conversion ends, the conversion result is stored in the A/D conversion result register (ADCR, ADCRH), and the A/D conversion end interrupt request signal (INTAD) is generated. After A/D conversion ends, the next A/D conversion immediately starts.

<4> When ADCS is overwritten with 1 during conversion operation, the current A/D conversion is interrupted, and conversion restarts. The partially converted data is discarded.

<5> When the value of the ADS register is rewritten or overwritten during conversion operation, the current A/D conversion is interrupted, and A/D conversion is performed on the analog input respecified by the ADS register. The partially converted data is discarded.

<6> Even if a hardware trigger is input during conversion operation, A/D conversion does not start.

<7> When ADCS is cleared to 0 during conversion operation, the current A/D conversion is interrupted, and the system enters the A/D conversion standby status.

<8> When ADCE is cleared to 0 while in the A/D conversion standby status, the A/D converter enters the stop status. When ADCE = 0, specifying 1 for ADCS is ignored and A/D conversion does not start.

Figure 12-17. Example of Software Trigger Mode (Sequential Conversion Mode) Operation Timing

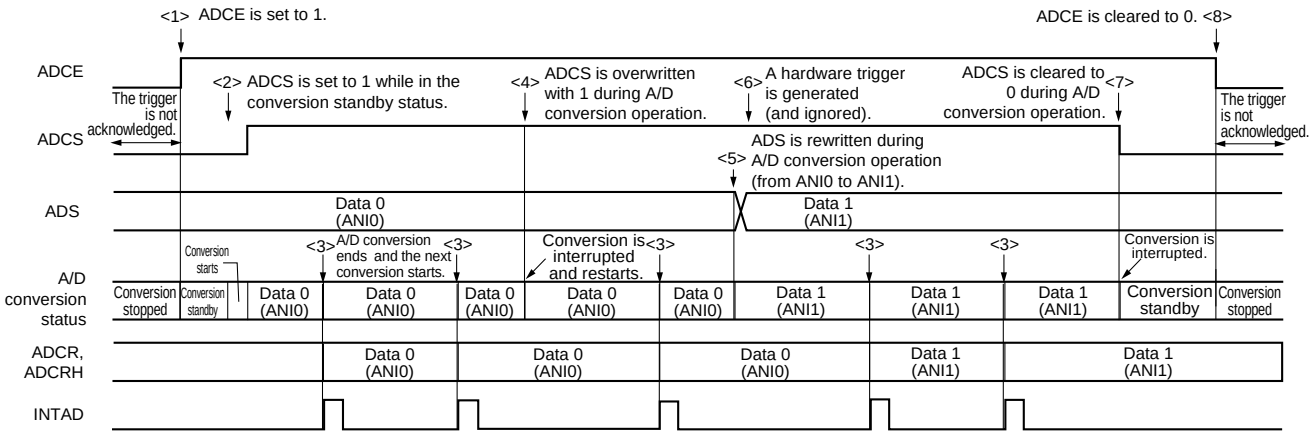

12.6.2 Software trigger mode (one-shot conversion mode)

<1> In the stop status, the ADCE bit of A/D converter mode register 0 (ADM0) is set to 1, and the system enters the A/D conversion standby status.

<2> After the software counts up to the stabilization wait time (1 μs), the ADCS bit of the ADM0 register is set to 1 to perform the A/D conversion of the analog input specified by the analog input channel specification register (ADS).

<3> When A/D conversion ends, the conversion result is stored in the A/D conversion result register (ADCR, ADCRH), and the A/D conversion end interrupt request signal (INTAD) is generated.

<4> After A/D conversion ends, the ADCS bit is automatically cleared to 0, and the system enters the A/D conversion standby status.

<5> When ADCS is overwritten with 1 during conversion operation, the current A/D conversion is interrupted, and conversion restarts. The partially converted data is discarded.

<6> When the value of the ADS register is rewritten or overwritten during conversion operation, the current A/D conversion is interrupted, and A/D conversion is performed on the analog input respecified by the ADS register. The partially converted data is discarded.

<7> When ADCS is cleared to 0 during conversion operation, the current A/D conversion is interrupted, and the system enters the A/D conversion standby status.

<8> When ADCE is cleared to 0 while in the A/D conversion standby status, the A/D converter enters the stop status. When ADCE = 0, specifying 1 for ADCS is ignored and A/D conversion does not start. In addition, A/D conversion does not start even if a hardware trigger is input while in the A/D conversion standby status.

Figure 12-18. Example of Software Trigger Mode (One-Shot Conversion Mode) Operation Timing

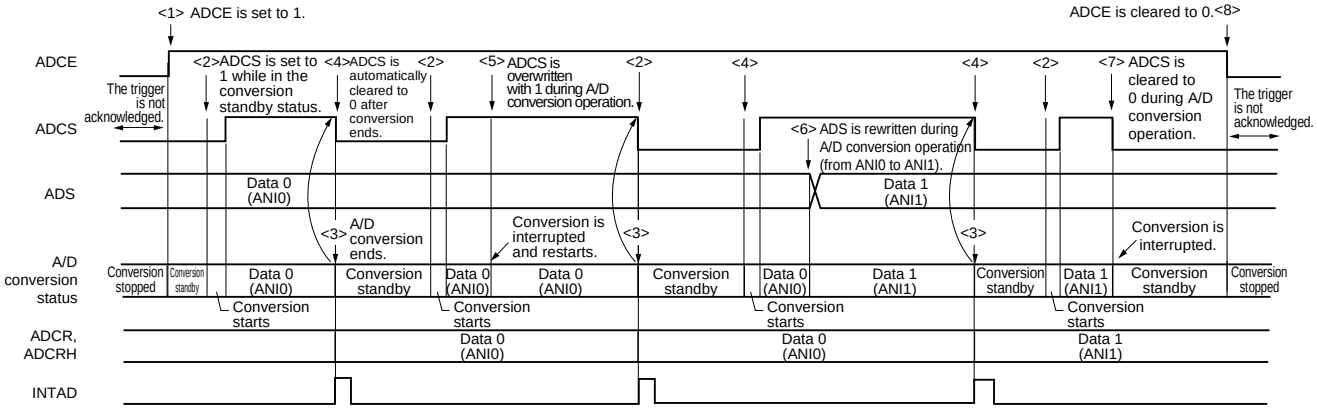

12.6.3 Hardware trigger no-wait mode (sequential conversion mode)

<1> In the stop status, the ADCE bit of A/D converter mode register 0 (ADM0) is set to 1, and the system enters the A/D conversion standby status.

<2> After the software counts up to the stabilization wait time (1 μs), the ADCS bit of the ADM0 register is set to 1 to place the system in the hardware trigger standby status (and conversion does not start at this stage). Note that, while in this status, A/D conversion does not start even if ADCS is set to 1.

<3> If a hardware trigger is input while ADCS = 1, A/D conversion is performed on the analog input specified by the analog input channel specification register (ADS).

<4> When A/D conversion ends, the conversion result is stored in the A/D conversion result register (ADCR, ADCRH), and the A/D conversion end interrupt request signal (INTAD) is generated. After A/D conversion ends, the next A/D conversion immediately starts.

<5> If a hardware trigger is input during conversion operation, the current A/D conversion is interrupted, and conversion restarts. The partially converted data is discarded.

<6> When the value of the ADS register is rewritten or overwritten during conversion operation, the current A/D conversion is interrupted, and A/D conversion is performed on the analog input respecified by the ADS register. The partially converted data is discarded.

<7> When ADCS is overwritten with 1 during conversion operation, the current A/D conversion is interrupted, and conversion restarts. The partially converted data is discarded.

<8> When ADCS is cleared to 0 during conversion operation, the current A/D conversion is interrupted, and the system enters the A/D conversion standby status. However, the A/D converter does not stop in this status.

<9> When ADCE is cleared to 0 while in the A/D conversion standby status, the A/D converter enters the stop status. When ADCS = 0, inputting a hardware trigger is ignored and A/D conversion does not start.

Figure 12-19. Example of Hardware Trigger No-Wait Mode (Sequential Conversion Mode) Operation Timing

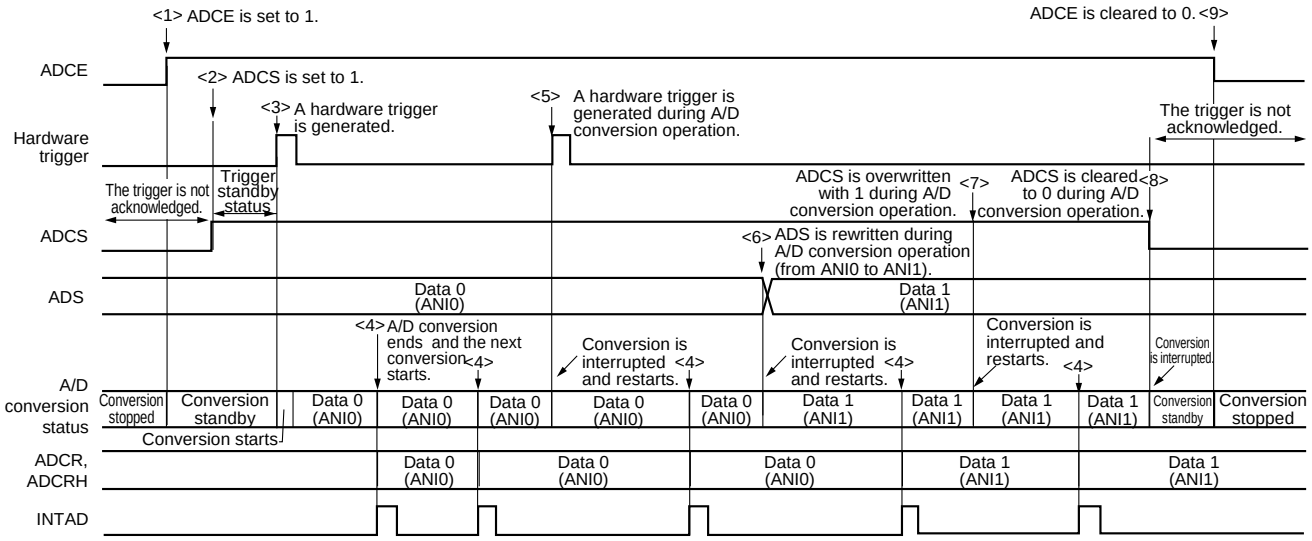

12.6.4 Hardware trigger no-wait mode (one-shot conversion mode)

<1> In the stop status, the ADCE bit of A/D converter mode register 0 (ADM0) is set to 1, and the system enters the A/D conversion standby status.

<2> After the software counts up to the stabilization wait time (1 μs), the ADCS bit of the ADM0 register is set to 1 to place the system in the hardware trigger standby status (and conversion does not start at this stage). Note that, while in this status, A/D conversion does not start even if ADCS is set to 1.

<3> If a hardware trigger is input while ADCS = 1, A/D conversion is performed on the analog input specified by the analog input channel specification register (ADS).

<4> When A/D conversion ends, the conversion result is stored in the A/D conversion result register (ADCR, ADCRH), and the A/D conversion end interrupt request signal (INTAD) is generated.

<5> After A/D conversion ends, the ADCS bit remains set to 1, and the system enters the A/D conversion standby status.

<6> If a hardware trigger is input during conversion operation, the current A/D conversion is interrupted, and conversion restarts. The partially converted data is discarded.

<7> When the value of the ADS register is rewritten or overwritten during conversion operation, the current A/D conversion is interrupted, and A/D conversion is performed on the analog input respecified by the ADS register. The partially converted data is discarded.

<8> When ADCS is overwritten with 1 during conversion operation, the current A/D conversion is interrupted, and conversion restarts. The partially converted data is discarded.

<9> When ADCS is cleared to 0 during conversion operation, the current A/D conversion is interrupted, and the system enters the A/D conversion standby status. However, the A/D converter does not stop in this status.

<10> When ADCE is cleared to 0 while in the A/D conversion standby status, the A/D converter enters the stop status. When ADCS = 0, inputting a hardware trigger is ignored and A/D conversion does not start.

Figure 12-20. Example of Hardware Trigger No-Wait Mode (One-Shot Conversion Mode) Operation Timing

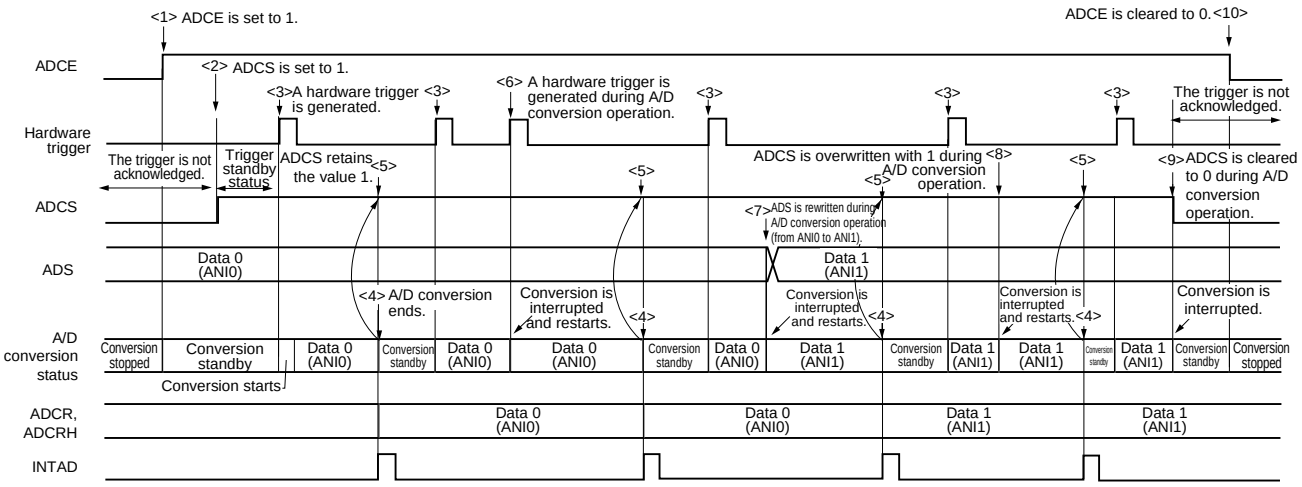

12.6.5 Hardware trigger wait mode (sequential conversion mode)

<1> In the stop status, the ADCE bit of A/D converter mode register 0 (ADM0) is set to 1, and the system enters the hardware trigger standby status.

<2> If a hardware trigger is input while in the hardware trigger standby status, A/D conversion is performed on the analog input specified by the analog input channel specification register (ADS). The ADCS bit of the ADM0 register is automatically set to 1 according to the hardware trigger input.

<3> When A/D conversion ends, the conversion result is stored in the A/D conversion result register (ADCR, ADCRH), and the A/D conversion end interrupt request signal (INTAD) is generated. After A/D conversion ends, the next A/D conversion immediately starts. (At this time, no hardware trigger is necessary.)

<4> If a hardware trigger is input during conversion operation, the current A/D conversion is interrupted, and conversion restarts. The partially converted data is discarded.

<5> When the value of the ADS register is rewritten or overwritten during conversion operation, the current A/D conversion is interrupted, and A/D conversion is performed on the analog input respecified by the ADS register. The partially converted data is discarded.

<6> When ADCS is overwritten with 1 during conversion operation, the current A/D conversion is interrupted, and conversion restarts. The partially converted data is discarded.

<7> When ADCS is cleared to 0 during conversion operation, the current A/D conversion is interrupted, the system enters the hardware trigger standby status, and the A/D converter enters the stop status. When ADCE = 0, inputting a hardware trigger is ignored and A/D conversion does not start.

Figure 12-21. Example of Hardware Trigger Wait Mode (Sequential Conversion Mode) Operation Timing

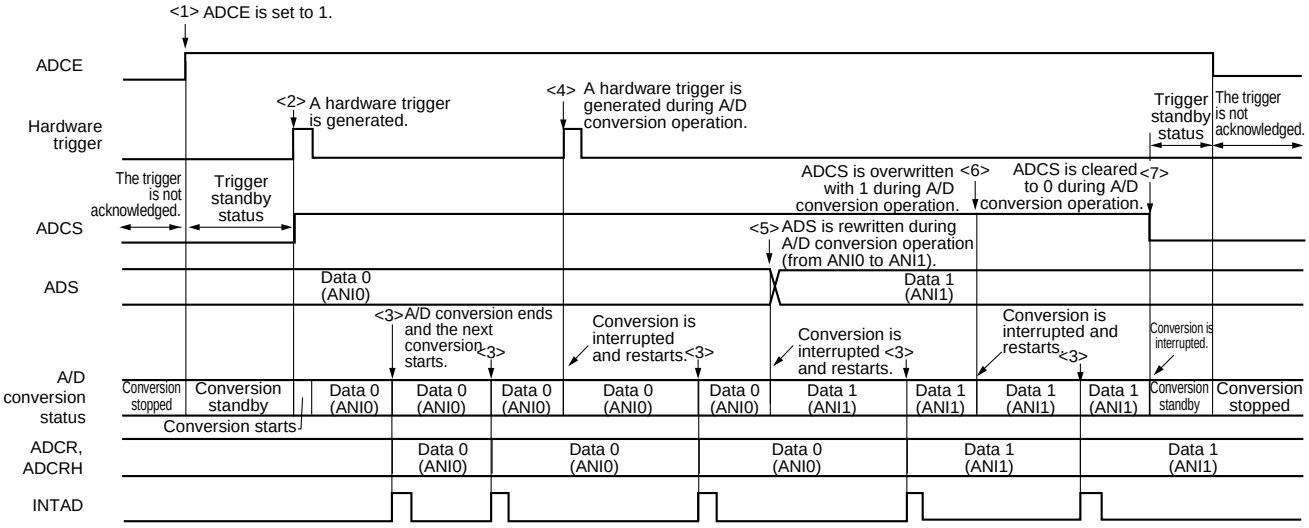

12.6.6 Hardware trigger wait mode (one-shot conversion mode)

<1> In the stop status, the ADCE bit of A/D converter mode register 0 (ADM0) is set to 1, and the system enters the hardware trigger standby status.

<2> If a hardware trigger is input while in the hardware trigger standby status, A/D conversion is performed on the analog input specified by the analog input channel specification register (ADS). The ADCS bit of the ADM0 register is automatically set to 1 according to the hardware trigger input.

<3> When A/D conversion ends, the conversion result is stored in the A/D conversion result register (ADCR, ADCRH), and the A/D conversion end interrupt request signal (INTAD) is generated.

<4> After A/D conversion ends, the ADCS bit is automatically cleared to 0, and the A/D converter enters the stop status.

<5> If a hardware trigger is input during conversion operation, the current A/D conversion is interrupted, and conversion restarts. The partially converted data is discarded.

<6> When the value of the ADS register is rewritten or overwritten during conversion operation, the current A/D conversion is interrupted, and A/D conversion is performed on the analog input respecified by the ADS register. The partially converted data is discarded.

<7> When ADCS is overwritten with 1 during conversion operation, the current A/D conversion is interrupted, and conversion restarts. The partially converted data is initialized.

<8> When ADCS is cleared to 0 during conversion operation, the current A/D conversion is interrupted, the system enters the hardware trigger standby status, and the A/D converter enters the stop status. When ADCE = 0, inputting a hardware trigger is ignored and A/D conversion does not start.

Figure 12-22. Example of Hardware Trigger Wait Mode (One-Shot Conversion Mode) Operation Timing

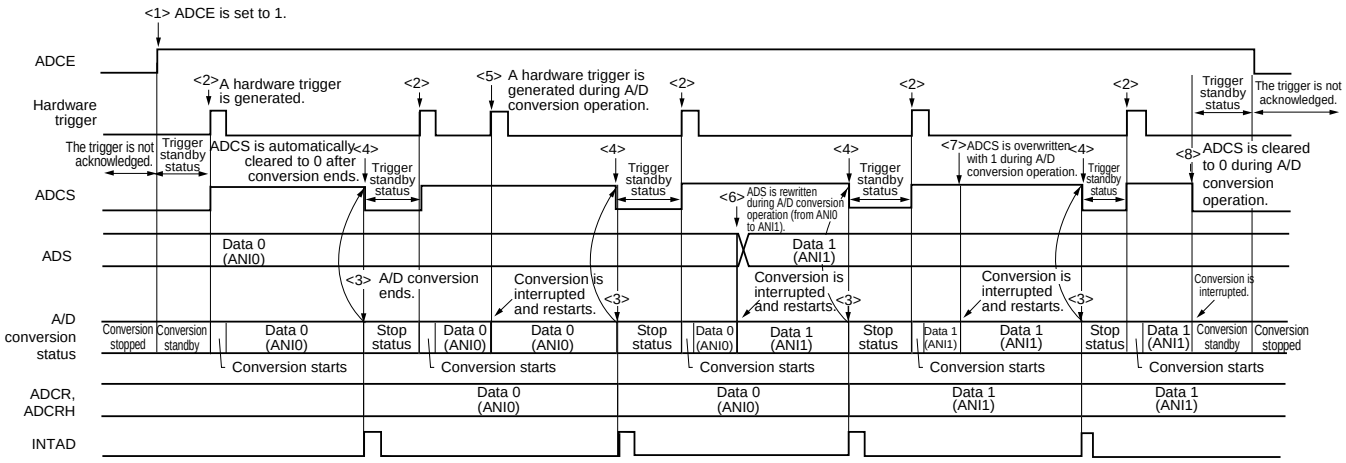

12.7 A/D Converter Setup Flowchart

The A/D converter setup flowchart in each operation mode is described below.

12.7.1 Setting up software trigger mode

Figure 12-23. Setting up Software Trigger Mode

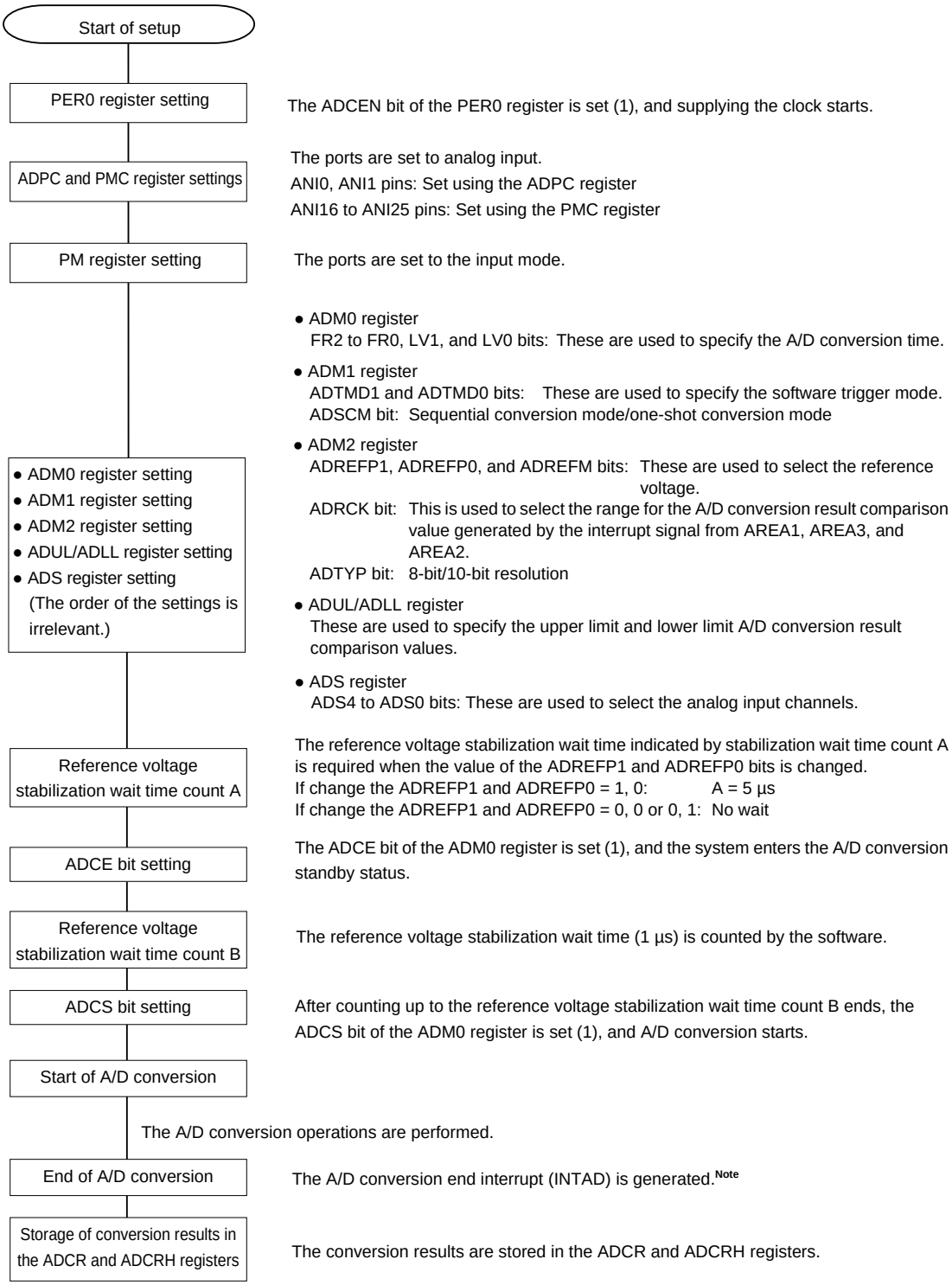

Note Depending on the settings of the ADRCK bit and ADUL/ADLL register, there is a possibility of no interrupt signal being generated. In this case, the results are not stored in the ADCR, ADCRH registers.

12.7.2 Setting up hardware trigger no-wait mode

Figure 12-24. Setting up Hardware Trigger No-Wait Mode

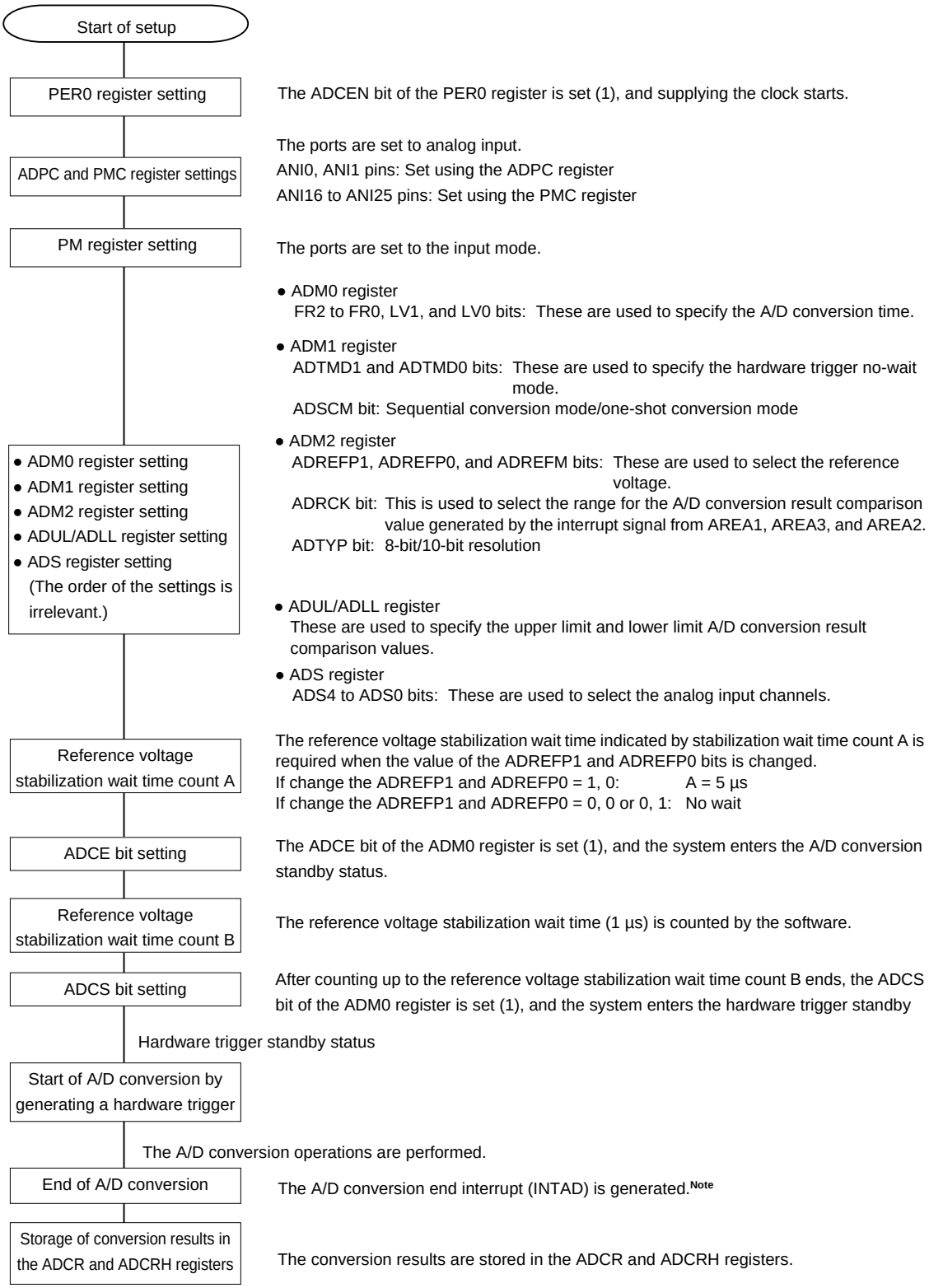

Note Depending on the settings of the ADRCK bit and ADUL/ADLL register, there is a possibility of no interrupt signal being generated. In this case, the results are not stored in the ADCR, ADCRH registers.

12.7.3 Setting up hardware trigger wait mode

Figure 12-25. Setting up Hardware Trigger Wait Mode

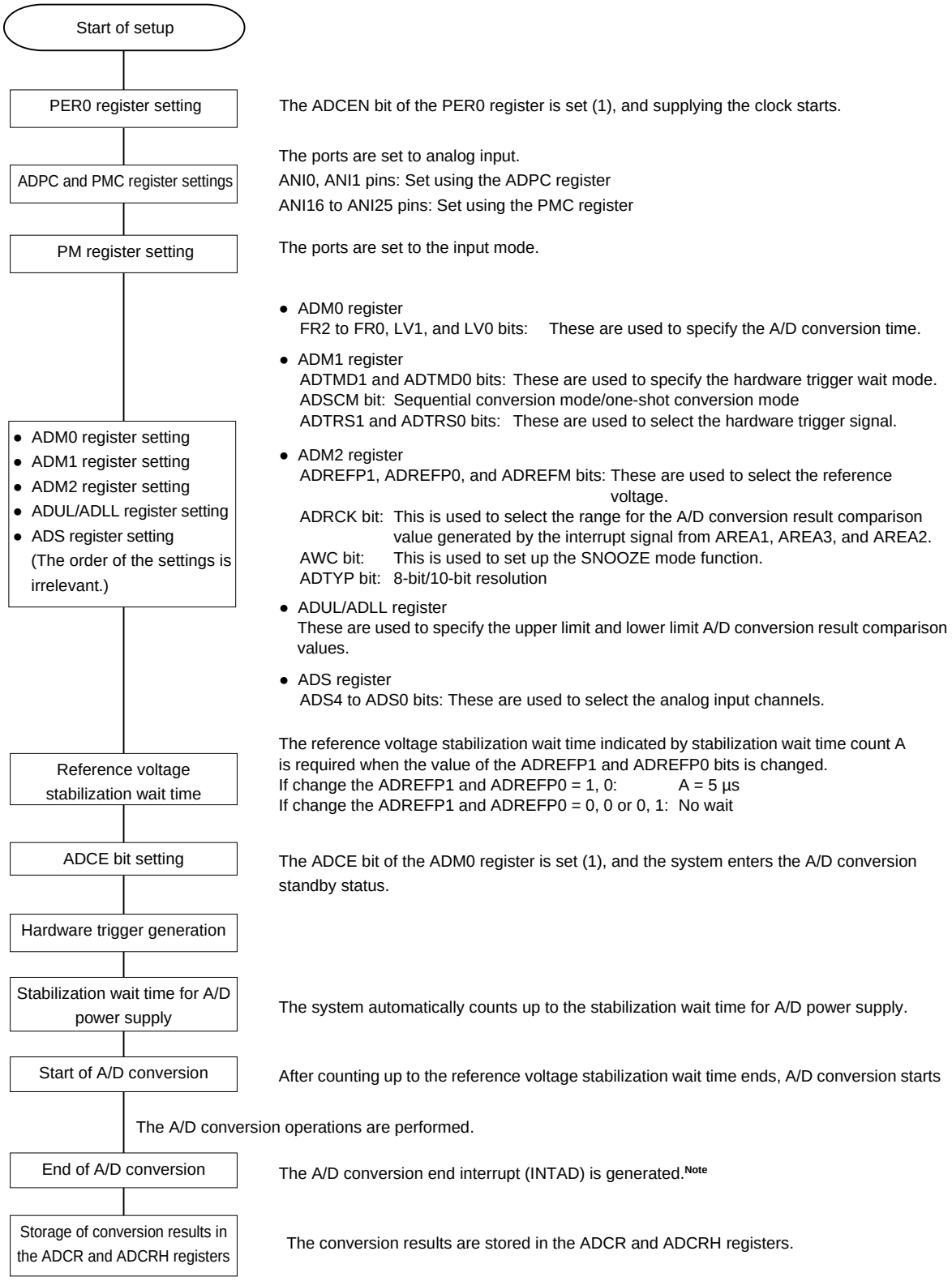

Note Depending on the settings of the ADRCK bit and ADUL/ADLL register, there is a possibility of no interrupt signal being generated. In this case, the results are not stored in the ADCR, ADCRH registers.

12.7.4 Setup when using temperature sensor (example for software trigger mode and one-shot conversion mode)

Figure 12-26. Setup When Using Temperature Sensor

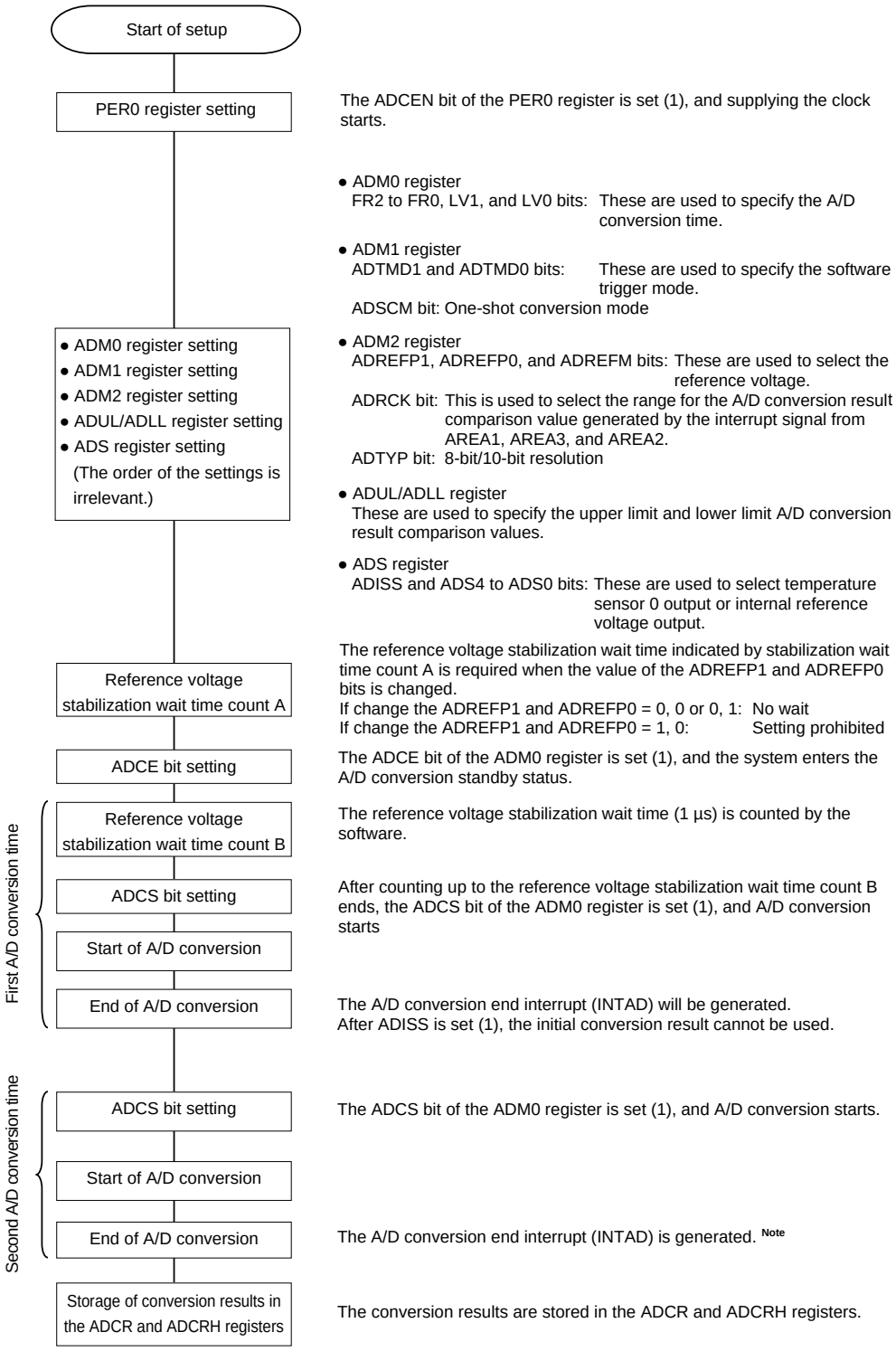

Note Depending on the settings of the ADRCK bit and ADUL/ADLL register, there is a possibility of no interrupt signal being generated. In this case, the results are not stored in the ADCR, ADCRH registers.

Caution This setting can be used only in HS (high-speed main) mode.

12.7.5 Setting up test mode

Figure 12-27. Setting up Test Mode

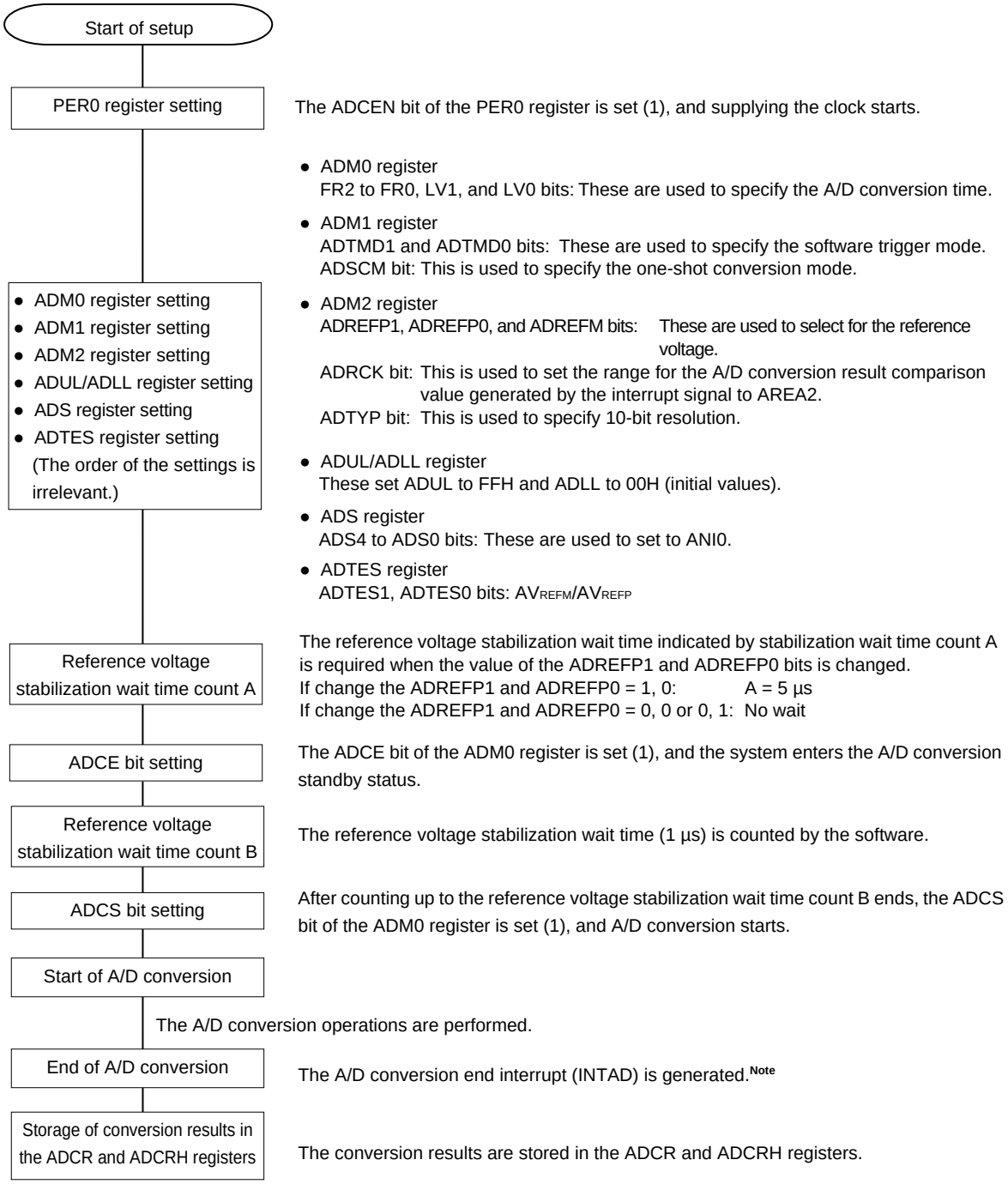

Note Depending on the settings of the ADRCK bit and ADUL/ADLL register, there is a possibility of no interrupt signal being generated. In this case, the results are not stored in the ADCR, ADCRH registers.

Caution For the procedure for testing the A/D converter, see 25.3.8 A/D test function.

12.8 SNOOZE Mode Function

In the SNOOZE mode, A/D conversion is triggered by inputting a hardware trigger in the STOP mode. Normally, A/D conversion is stopped while in the STOP mode, but, by using the SNOOZE mode, A/D conversion can be performed without operating the CPU by inputting a hardware trigger. This is effective for reducing the operation current.

If the A/D conversion result range is specified using the ADUL and ADLL registers, A/D conversion results can be judged at a certain interval of time in SNOOZE mode. Using this function enables power supply voltage monitoring and input key judgment based on A/D inputs.

In the SNOOZE mode, only the following conversion modes can be used:

- Hardware trigger wait mode (one-shot conversion mode)

Caution That the SNOOZE mode can only be specified when the high-speed on-chip oscillator clock is selected for f_{CLK}.

Figure 12-28. Block Diagram When Using SNOOZE Mode Function

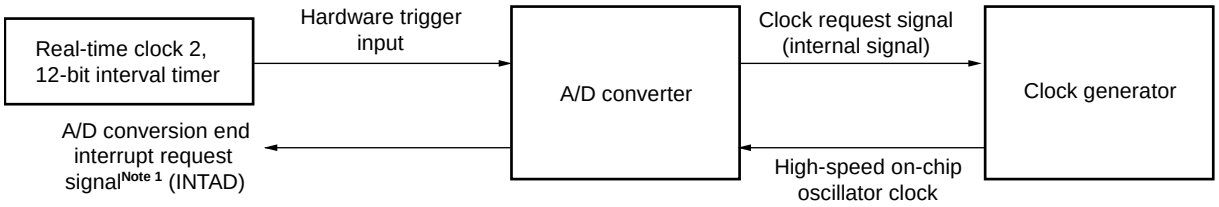

When using the SNOOZE mode function, the initial setting of each register is specified before switching to the STOP mode (for details about these settings, see **12.7.3 Setting up hardware trigger wait mode**[Note 2]). Just before move to STOP mode, bit 2 (AWC) of A/D converter mode register 2 (ADM2) is set to 1. After the initial settings are specified, bit 0 (ADCE) of A/D converter mode register 0 (ADM0) is set to 1.

If a hardware trigger is input after switching to the STOP mode, the high-speed on-chip oscillator clock is supplied to the A/D converter. After supplying this clock, the system automatically counts up to the A/D power supply stabilization wait time, and then A/D conversion starts.

The SNOOZE mode operation after A/D conversion ends differs depending on whether an interrupt signal is generated[Note 1].

Notes 1. Depending on the setting of the A/D conversion result comparison function (ADRCK bit, ADUL/ADLL register), there is a possibility of no interrupt signal being generated.

2. Be sure to set the ADM1 register to E2H or E3H.

Remark The hardware trigger is INTRTC or INTIT.
Specify the hardware trigger by using the A/D Converter Mode Register 1 (ADM1).

(1) If an interrupt is generated after A/D conversion ends

If the A/D conversion result value is inside the range of values specified by the A/D conversion result comparison function (which is set up by using the ADRCK bit and ADUL/ADLL register), the A/D conversion end interrupt request signal (INTAD) is generated.

When A/D conversion ends and an A/D conversion end interrupt request signal (INTAD) is generated, the A/D converter returns to normal operation mode from SNOOZE mode. At this time, be sure to clear bit 2 (AWC = 0: SNOOZE mode release) of the A/D converter mode register 2 (ADM2). If the AWC bit is left set to 1, A/D conversion will not start normally in the subsequent SNOOZE or normal operation mode.

Figure 12-29. Operation Example When Interrupt Is Generated After A/D Conversion Ends

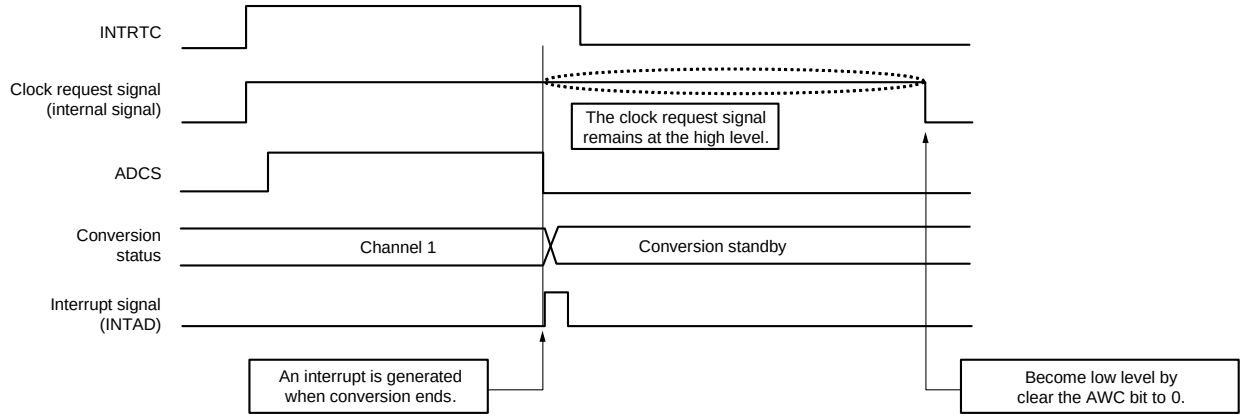

(2) If no interrupt is generated after A/D conversion ends

If the A/D conversion result value is outside the range of values specified by the A/D conversion result comparison function (which is set up by using the ADRCK bit and ADUL/ADLL register), the A/D conversion end interrupt request signal (INTAD) is not generated.

If the A/D conversion end interrupt request signal (INTAD) is not generated after A/D conversion ends, the clock request signal (an internal signal) is automatically set to the low level, and supplying the high-speed on-chip oscillator clock stops. If a hardware trigger is input later, A/D conversion work is again performed in the SNOOZE mode.

Figure 12-30. Operation Example When No Interrupt Is Generated After A/D Conversion Ends

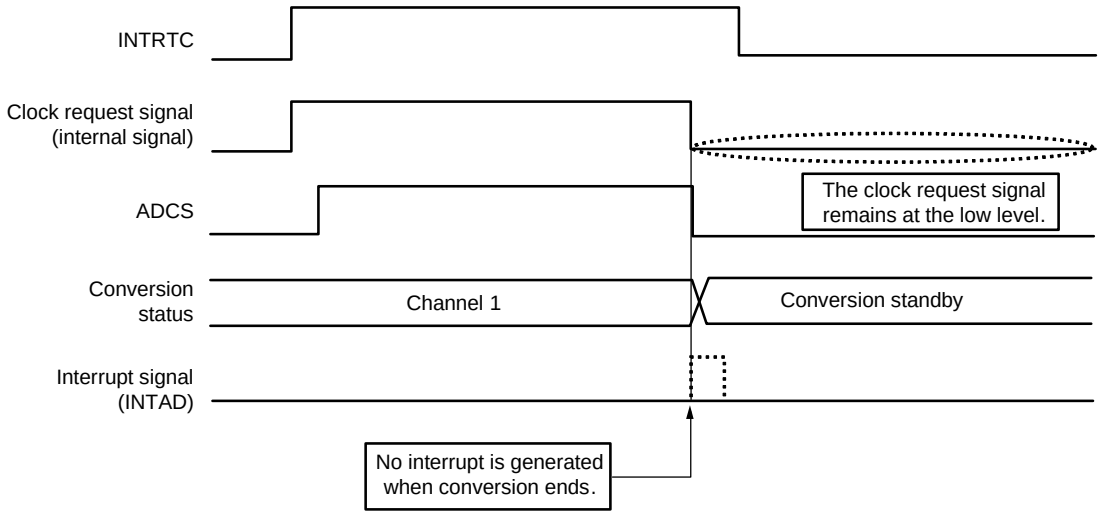

Figure 12-31. Flowchart for Setting up SNOOZE Mode

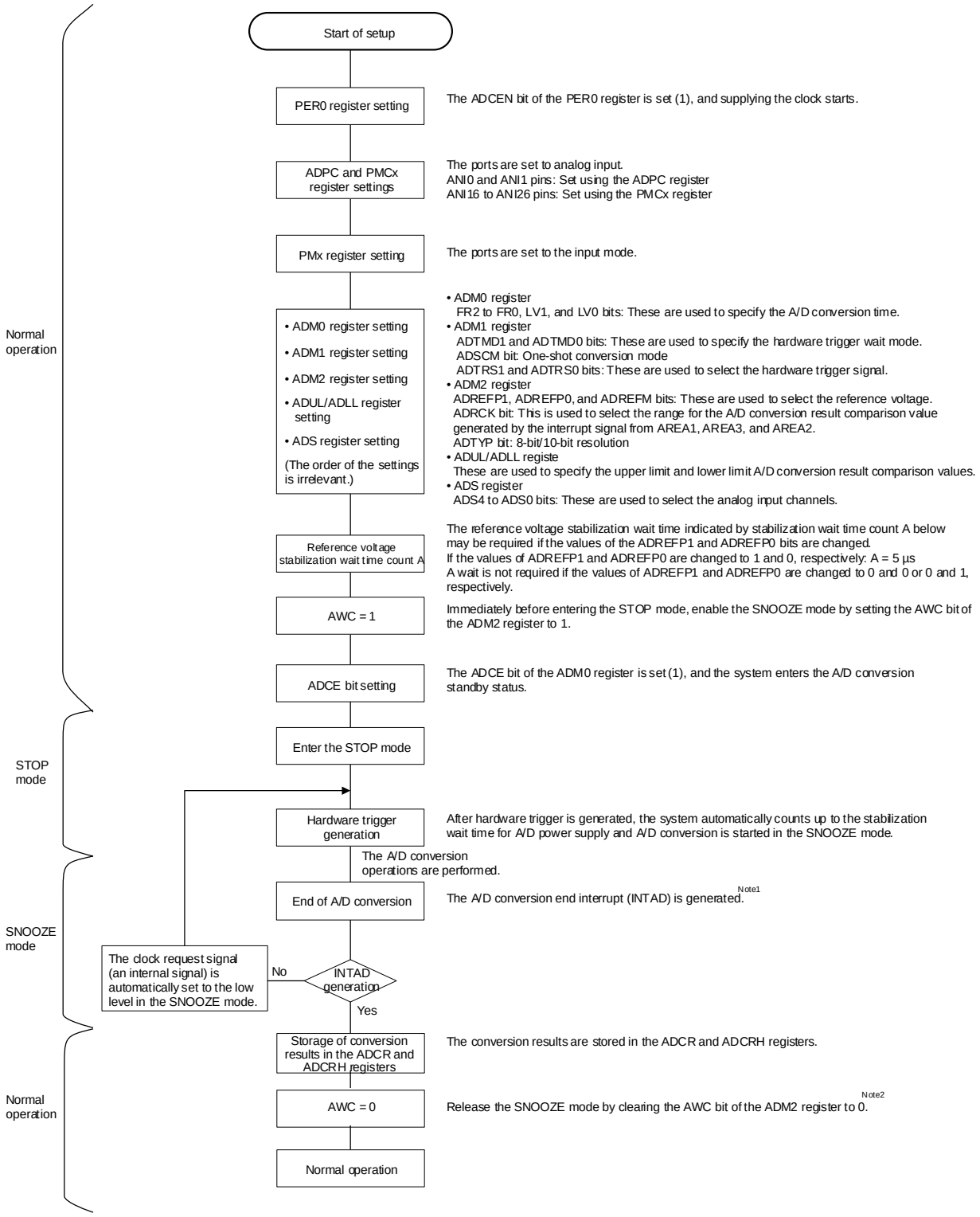

Notes 1. If the A/D conversion end interrupt request signal (INTAD) is not generated by setting ADRCK bit and ADUL/ADLL register, the result is not stored in the ADCR and ADCRH registers.
The system enters the STOP mode again. If a hardware trigger is input later, A/D conversion operation is again performed in the SNOOZE mode.

2. If the AWC bit is left set to 1, A/D conversion will not start normally in spite of the subsequent SNOOZE or normal operation mode. Be sure to clear the AWC bit to 0.

12.9 How to Read A/D Converter Characteristics Table

Here, special terms unique to the A/D converter are explained.

(1) Resolution

This is the minimum analog input voltage that can be identified. That is, the percentage of the analog input voltage per bit of digital output is called 1LSB (Least Significant Bit). The percentage of 1LSB with respect to the full scale is expressed by %FSR (Full Scale Range).

1LSB is as follows when the resolution is 10 bits.

$1LSB = 1/2^{10} = 1/1024$
$= 0.098\%FSR$

Accuracy has no relation to resolution, but is determined by overall error.

(2) Overall error

This shows the maximum error value between the actual measured value and the theoretical value.
Zero-scale error, full-scale error, integral linearity error, and differential linearity errors that are combinations of these express the overall error.
Note that the quantization error is not included in the overall error in the characteristics table.

(3) Quantization error

When analog values are converted to digital values, a ±1/2LSB error naturally occurs. In an A/D converter, an analog input voltage in a range of ±1/2LSB is converted to the same digital code, so a quantization error cannot be avoided.
Note that the quantization error is not included in the overall error, zero-scale error, full-scale error, integral linearity error, and differential linearity error in the characteristics table.

Figure 12-32. Overall Error

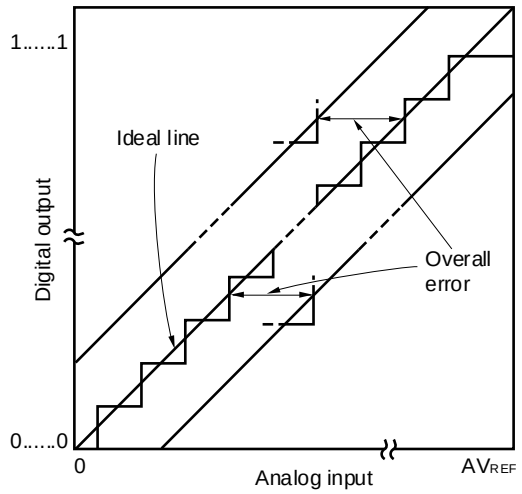

Figure 12-33. Quantization Error

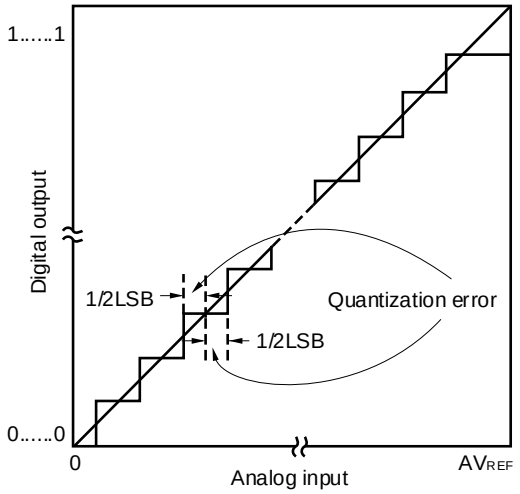

(4) Zero-scale error

This shows the difference between the actual measurement value of the analog input voltage and the theoretical value (1/2LSB) when the digital output changes from 0.....000 to 0.....001.
If the actual measurement value is greater than the theoretical value, it shows the difference between the actual measurement value of the analog input voltage and the theoretical value (3/2LSB) when the digital output changes from 0……001 to 0……010.

(5) Full-scale error

This shows the difference between the actual measurement value of the analog input voltage and the theoretical value (Full-scale – 3/2LSB) when the digital output changes from 1.....110 to 1.....111.

(6) Integral linearity error

This shows the degree to which the conversion characteristics deviate from the ideal linear relationship. It expresses the maximum value of the difference between the actual measurement value and the ideal straight line when the zero-scale error and full-scale error are 0.

(7) Differential linearity error

While the ideal width of code output is 1LSB, this indicates the difference between the actual measurement value and the ideal value.

Figure 12-34. Zero-Scale Error

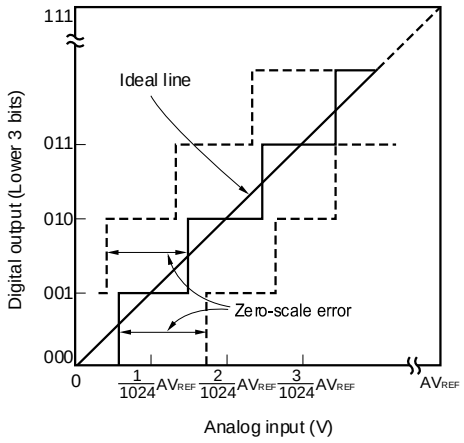

Figure 12-35. Full-Scale Error

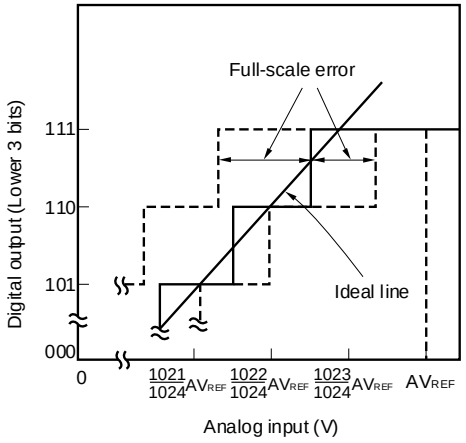

Figure 12-36. Integral Linearity Error

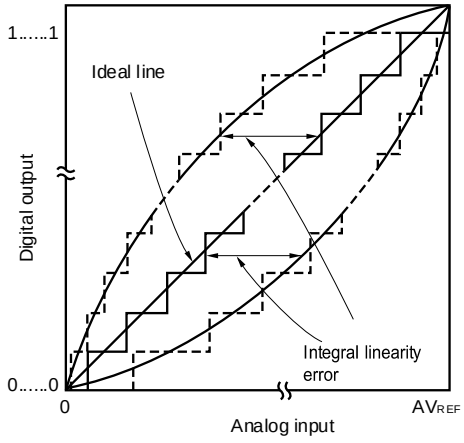

Figure 12-37. Differential Linearity Error

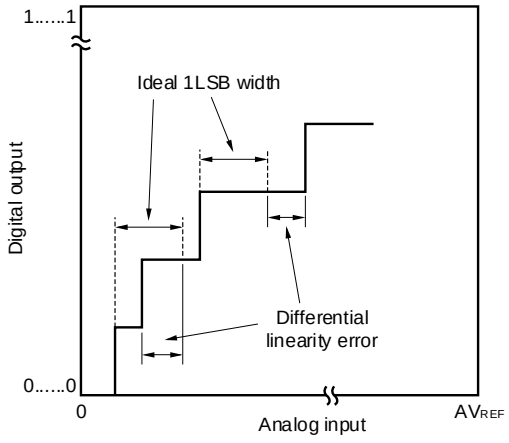

(8) Conversion time

This expresses the time from the start of sampling to when the digital output is obtained.

The sampling time is included in the conversion time in the characteristics table.

(9) Sampling time

This is the time the analog switch is turned on for the analog voltage to be sampled by the sample & hold circuit.

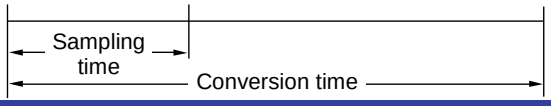

12.10 Cautions for A/D Converter

(1) Operating current in STOP mode

Shift to STOP mode after stopping the A/D converter (by setting bit 7 (ADCS) of A/D converter mode register 0 (ADM0) to 0). The operating current can be reduced by setting bit 0 (ADCE) of the ADM0 register to 0 at the same time.

To restart from the standby status, clear bit 0 (ADIF) of interrupt request flag register 1H (IF1H) to 0 and start operation.

(2) Input range of ANI0, ANI1 and ANI16 to ANI25 pins

Observe the rated range of the ANI0, ANI1 and ANI16 to ANI25 pins input voltage. If a voltage exceeding V_{DD} and AV_{REFP} or below V_{SS} and AV_{REFM} (even in the range of absolute maximum ratings) is input to an analog input channel, the converted value of that channel becomes undefined. In addition, the converted values of the other channels may also be affected.

When internal reference voltage (1.45 V) is selected reference voltage for the + side of the A/D converter, do not input voltage exceeding internal reference voltage (1.45 V) to a pin selected by the ADS register. However, it is no problem that a pin not selected by the ADS register is input voltage exceeding the internal reference voltage (1.45 V).

Caution Internal reference voltage (1.45 V) can be used only in HS (high-speed main) mode.

(3) Conflicting operations

<1> Conflict between the A/D conversion result register (ADCR, ADCRH) write and the ADCR or ADCRH register read by instruction upon the end of conversion

The ADCR or ADCRH register read has priority. After the read operation, the new conversion result is written to the ADCR or ADCRH registers.

<2> Conflict between the ADCR or ADCRH register write and the A/D converter mode register 0 (ADM0) write, the analog input channel specification register (ADS), or A/D port configuration register (ADPC) write upon the end of conversion

The ADM0, ADS, or ADPC registers write has priority. The ADCR or ADCRH register write is not performed, nor is the conversion end interrupt signal (INTAD) generated.

(4) Noise countermeasures

To maintain the 10-bit resolution, attention must be paid to noise input to the AV_{REFP}, V_{DD}, ANI0, ANI1, and ANI16 to ANI25 pins.

<1> Connect a capacitor with a low equivalent resistance and a good frequency response (capacitance of about 0.01 μF) via the shortest possible run of relatively thick wiring to the power supply.

<2> The higher the output impedance of the analog input source, the greater the influence. To reduce the noise, connecting external capacitor as shown in Figure 12-38 is recommended.

<3> Do not switch these pins with other pins during conversion.

<4> The accuracy is improved if the HALT mode is set immediately after the start of conversion.

Figure 12-38. Analog Input Pin Connection

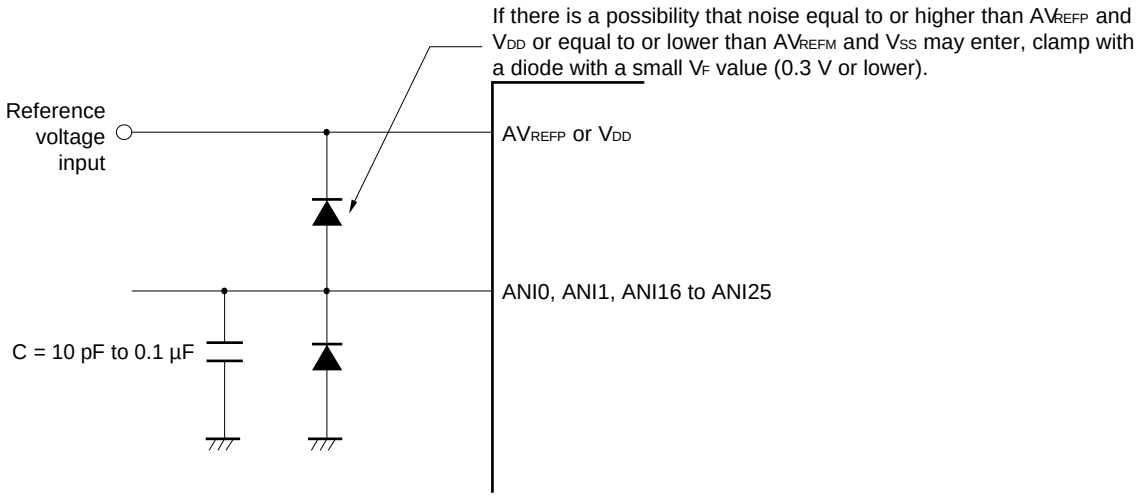

(5) Analog input (ANIn) pins

<1> The analog input pins (ANI0, ANI1) are also used as input port pins (P20, P21).
When A/D conversion is performed with any of the ANI0, ANI1 pins selected, do not change to output value P20, P21 while conversion is in progress; otherwise the conversion resolution may be degraded.

<2> If a pin adjacent to a pin that is being A/D converted is used as a digital I/O port pin, the A/D conversion result might differ from the expected value due to a coupling noise. Be sure to avoid the input or output of digital signals and signals with similarly sharp transitions during A/D conversion.

(6) Input impedance of analog input (ANIn) pins

This A/D converter charges a sampling capacitor for sampling during sampling time.
Therefore, only a leakage current flows when sampling is not in progress, and a current that charges the capacitor flows during sampling. Consequently, the input impedance fluctuates depending on whether sampling is in progress, and on the other states.
To make sure that sampling is effective, however, we recommend using the converter with analog input sources that have output impedances no greater than 1 kΩ. If the output impedance cannot be set to 1 kΩ or smaller, lengthen the sampling time or connect a larger capacitor (with a value of about 0.1 µF) to the pin from among ANI0, ANI1, and ANI16 to ANI25 to which the source is connected (see **Figure 12-38**). The sampling capacitor may be being charged while the setting of the ADCS bit is 0 and immediately after sampling is restarted and so is not defined at these times. Accordingly, the state of conversion is undefined after charging starts in the next round of conversion after the value of the ADCS bit has been 1 or when conversion is repeated. Thus, to secure full charging regardless of the size of fluctuations in the analog signal, ensure that the output impedances of the sources of analog inputs are low or secure sufficient time for the completion of conversion.

(7) Interrupt request flag (ADIF)

The interrupt request flag (ADIF) is not cleared even if the analog input channel specification register (ADS) is changed.

Therefore, if an analog input pin is changed during A/D conversion, the A/D conversion result and ADIF flag for the pre-change analog input may be set just before the ADS register rewrite. Caution is therefore required since, at this time, when ADIF flag is read immediately after the ADS register rewrite, ADIF flag is set despite the fact A/D conversion for the post-change analog input has not ended.

When A/D conversion is stopped and then resumed, clear ADIF flag before the A/D conversion operation is resumed.

Figure 12-39. Timing of A/D Conversion End Interrupt Request Generation

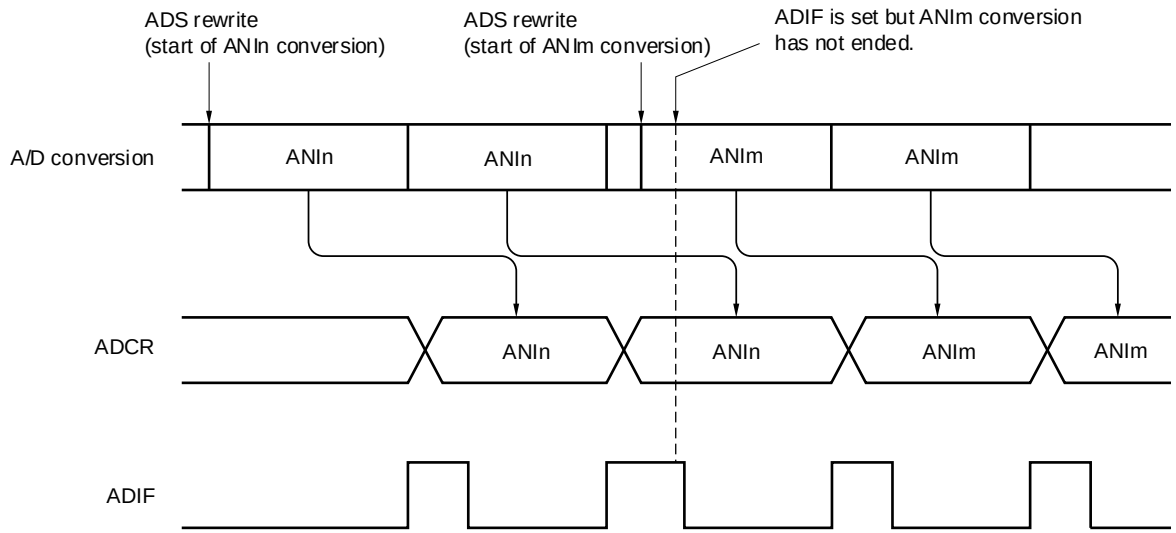

(8) Conversion results just after A/D conversion start

While in the software trigger mode or hardware trigger no-wait mode, the first A/D conversion value immediately after A/D conversion starts may not fall within the rating range if the ADCS bit is set to 1 within 1 μs after the ADCE bit was set to 1. Take measures such as polling the A/D conversion end interrupt request (INTAD) and removing the first conversion result.

(9) A/D conversion result register (ADCR, ADCRH) read operation

When a write operation is performed to A/D converter mode register 0 (ADM0), analog input channel specification register (ADS), A/D port configuration register (ADPC), and port mode control register (PMC), the contents of the ADCR and ADCRH registers may become undefined. Read the conversion result following conversion completion before writing to the ADM0, ADS, ADPC, or PMC register. Using a timing other than the above may cause an incorrect conversion result to be read.

(10) Internal equivalent circuit

The equivalent circuit of the analog input block is shown below.

Figure 12-40. Internal Equivalent Circuit of ANIn Pin

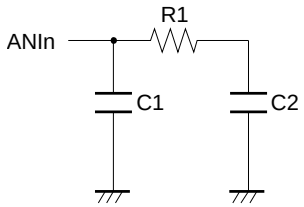

Table 12-4. Resistance and Capacitance Values of Equivalent Circuit (Reference Values)

AV_{REFP}, V_{DD}	ANIn Pins	R1 [kΩ]	C1 [pF	C2 [pF]
3.6 V ≤ V_{DD} ≤ 5.5 V	ANI0, ANI1	14	8	2.5
	ANI16 to ANI25	18	8	7.0
2.7 V ≤ V_{DD} ≤ 3.6 V	ANI0, ANI1	39	8	2.5
	ANI16 to ANI25	53	8	7.0
1.8 V ≤ V_{DD} ≤ 2.7 V	ANI0, ANI1	231	8	2.5
	ANI16 to ANI25	321	8	7.0
1.6 V ≤ V_{DD} < 2.7 V	ANI0, ANI1	632	8	2.5
	ANI16 to ANI25	902	8	7.0

Remark The resistance and capacitance values shown in Table 12-4 are not guaranteed values.

(11) Starting the A/D converter

Start the A/D converter after the AV_{REFP} and V_{DD} voltages stabilize.

CHAPTER 13 COMPARATOR

The comparator compares a reference input voltage to an analog input voltage. It consists of two independent comparators: comparator 0 and comparator 1.

13.1 Functions of Comparator

The comparator has the following functions.

- Comparator high-speed mode, comparator low-speed mode, or comparator window mode can be selected.
- The external reference voltage input or internal reference voltage can be selected as the reference voltage.
- The canceling width of the noise canceling digital filter can be selected.
- An interrupt signal can be generated by detecting an active edge of the comparator output.
- An event signal can be output to TMKB20 by detecting an active edge of the comparator output.

13.2 Configuration of Comparator

Figure 13-1 shows the comparator block diagram.

Figure 13-1. Comparator Block Diagram

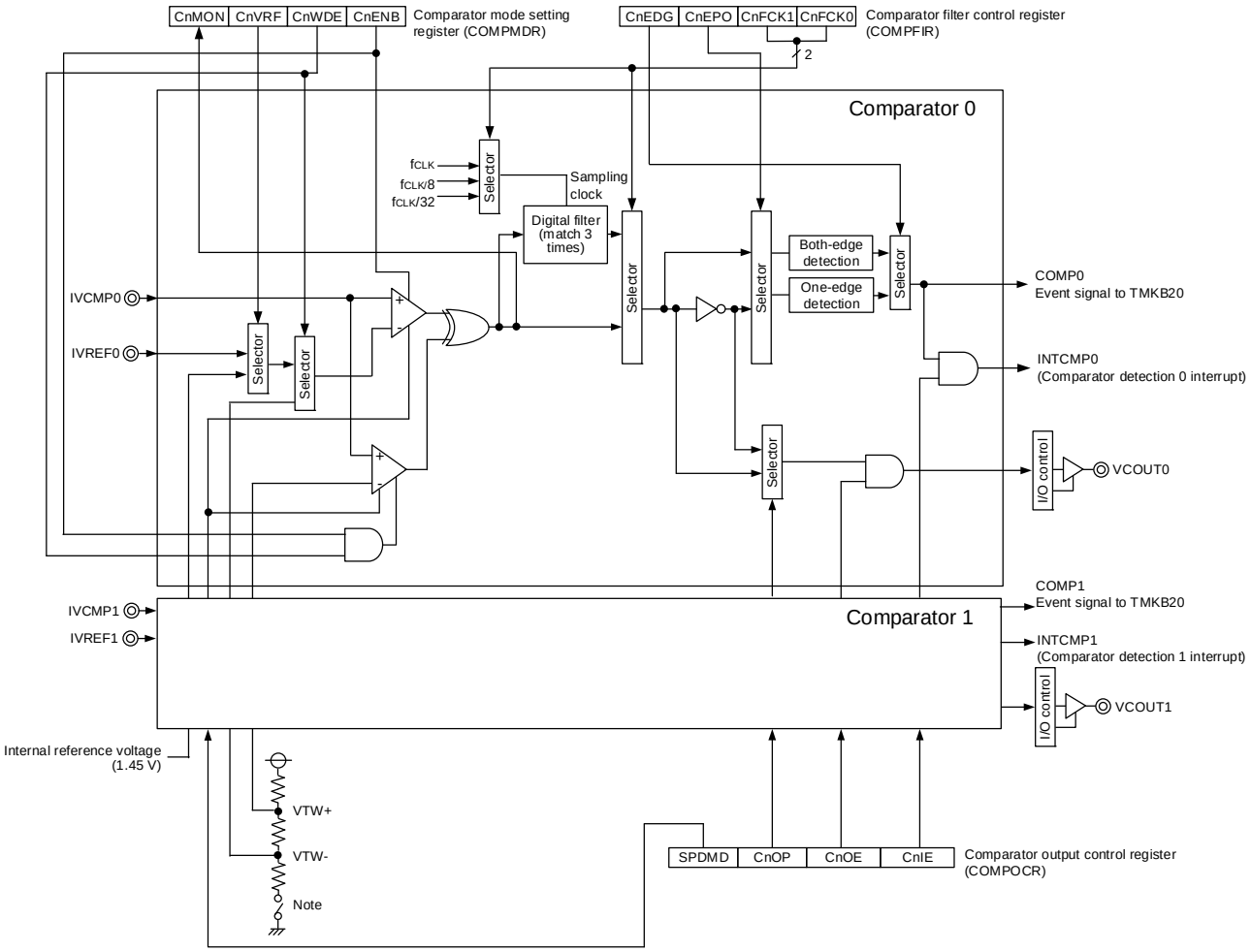

Note When either or both of the C0WDE and C1WDE bits are set to 1, this switch is turned on and the divider resistors for generating the comparison voltage are enabled.

Remark n = 0, 1

13.3 Registers Controlling Comparator

Table 13-1 lists the registers controlling comparator.

Table 13-1. Registers Controlling Comparator

Register Name	Symbol
Peripheral enable register 1	PER1
Comparator mode setting register	COMPMDR
Comparator filter control register	COMPFIR
Comparator output control register	COMPOCR
Port mode control register 4	PMC4
LCD port function register 3	PFSEG3
Port mode registers 0, 4	PM0, PM4
Port registers 0, 4	P0, P4

13.3.1 Peripheral enable register 1 (PER1)

The PER1 register is used to enable or disable use of each peripheral hardware macro. Clock supply to a hardware macro that is not used is stopped in order to reduce the power consumption and noise.

When the Comparator is used, be sure to set bit 5 (CMPEN) of this register to 1.

The PER1 register can be set by a 1-bit or 8-bit memory manipulation instruction.

Reset signal generation clears this register to 00H.

Figure 13-2. Format of Peripheral Enable Register 1 (PER1)

Address: F007AH After reset: 00H R/W

Symbol	<7>	6	<5>	<4>	3	2	1	0
PER1	TMKAEN	0	CMPEN	TKB2EN	0	0	0	0

CMPEN	Control of comparator input clock
0	Stops input clock supply. ● SFR used by the Comparator cannot be written. ● The Comparator is in the reset status.
1	Supplies input clock. ● SFR used by the Comparator can be read/written.

Cautions 1. When setting the comparator, be sure to set the CMPEN bit to 1 first and the following registers. If CMPEN = 0, a control register of the comparator becomes default value, and all write values are ignored (except for port mode registers 0, 4 (PM0, PM4), port registers 0, 4 (P0, P4), port mode control register 4 (PMC4), and LCD port function register 3 (PFSEG3)).

- **Comparator mode setting register (COMPMDR)**
- **Comparator filter control register (COMPFIR)**
- **Comparator output control register (COMPOCR)**

2. Be sure to clear the bits 6 and 3 to 0 to “0”.

13.3.2 Comparator mode setting register (COMPMDR)

Figure 13-3. Format of Comparator Mode Setting Register (COMPMDR)

Address: F0340H After reset: 00H R/W

Symbol	<7>	6	5	<4>	<3>	2	1	<0>
COMPMDR	C1MON	C1VRF	C1WDE	C1ENB	C0MON	C0VRF	C0WDE	C0ENB

C1MON	Comparator 1 monitor flag[Notes 3, 7]
0	In standard mode: IVCMP1 < comparator 1 reference voltage or comparator 1 stopped In window mode: IVCMP1 < low-voltage reference or IVCMP1 > high-voltage reference
1	In standard mode: IVCMP1 > comparator 1 reference voltage In window mode: Low-voltage reference < IVCMP1 < high-voltage reference

C1VRF	Comparator 1 reference voltage selection[Notes 1, 4, 5, 6]
0	Comparator 1 reference voltage is IVREF1 input
1	Comparator 1 reference voltage is internal reference voltage (1.45 V)

C1WDE	Comparator 1 window mode selection[Note 2]
0	Comparator 1 standard mode
1	Comparator 1 window mode

C1ENB	Comparator 1 operation enable
0	Comparator 1 operation disabled
1	Comparator 1 operation enabled

C0MON	Comparator 0 monitor flag[Notes 3, 7]
0	In standard mode: IVCMP0 < comparator 0 reference voltage or comparator 0 stopped In window mode: IVCMP0 < low-voltage reference or IVCMP0 > high-voltage reference
1	In standard mode: IVCMP0 > comparator 0 reference voltage In window mode: Low-voltage reference < IVCMP0 < high-voltage reference

(**Notes** are listed on the next page.)

C0VRF	Comparator 0 reference voltage selection[Notes 1, 4, 5, 6]
0	Comparator 0 reference voltage is IVREF0 input
1	Comparator 0 reference voltage is internal reference voltage (1.45 V)

C0WDE	Comparator 0 window mode selection[Note 2]
0	Comparator 0 standard mode
1	Comparator 0 window mode

C0ENB	Comparator 0 operation enable
0	Comparator 0 operation disabled
1	Comparator 0 operation enabled

Notes 1. Valid only when standard mode is selected. In window mode, the reference voltage in the comparator is selected regardless of the setting of this bit.

2. Window mode cannot be set when low-speed mode is selected (the SPDMD bit in the COMPOCR register is 0).

3. The initial value is 0 immediately after a reset is released. However, the value is undefined when C0ENB is set to 0 and C1ENB is set to 0 after operation of the comparator is enabled once.

4. The internal reference voltage (1.45 V) can be selected in HS (high-speed main) mode. When the internal reference voltage (1.45 V) is selected in HS (high-speed main) mode, the temperature sensor output cannot be A/D converted.

5. Do not select the internal reference voltage in STOP mode.

6. Do not select the internal reference voltage when the subsystem clock (f_{XT}) is selected as the CPU clock and both the high-speed system clock (f_{MX}) and high-speed on-chip oscillator clock (f_{IH}) are stopped.

7. Writing to this bit is ignored.

13.3.3 Comparator filter control register (COMPFIR)

Figure 13-4. Format of Comparator Filter Control Register (COMPFIR)

Address: F0341H After reset: 00H R/W

Symbol	7	6	5	4	3	2	1	0
COMPFIR	C1EDG	C1EPO	C1FCK1	C1FCK0	C0EDG	C0EPO	C0FCK1	C0FCK0

C1EDG	Comparator 1 edge detection selection[Note 1]
0	Interrupt request by comparator 1 one-edge detection
1	Interrupt request by comparator 1 both-edge detection

C1EPO	Comparator 1 edge polarity switching[Note 1]
0	Interrupt request at comparator 1 rising edge
1	Interrupt request at comparator 1 falling edge

C1FCK1	C1FCK0	Comparator 1 filter selection[Note 1]
0	0	No comparator 1 filter
0	1	Comparator 1 filter enabled, sampling at f_{CLK}
1	0	Comparator 1 filter enabled, sampling at $f_{CLK}/8$
1	1	Comparator 1 filter enabled, sampling at $f_{CLK}/32$

C0EDG	Comparator 0 edge detection selection[Note 2]
0	Interrupt request by comparator 0 one-edge detection
1	Interrupt request by comparator 0 both-edge detection

C0EPO	Comparator 0 edge polarity switching[Note 2]
0	Interrupt request at comparator 0 rising edge
1	Interrupt request at comparator 0 falling edge

C0FCK1	C0FCK0	Comparator 0 filter selection[Note 2]
0	0	No comparator 0 filter
0	1	Comparator 0 filter enabled, sampling at f_{CLK}
1	0	Comparator 0 filter enabled, sampling at $f_{CLK}/8$
1	1	Comparator 0 filter enabled, sampling at $f_{CLK}/32$

Notes 1. If bits C1FCK1, C1FCK0, C1EPO, and C1EDG are changed, a comparator 1 interrupt request and an event signal to TMKB20 may be generated. Change these bits only after setting 16-bit timer KB2 counter restart select register 09 (ELSELR09) to 0, and bits 5 and 13 of forced output stop function control registers 0, 1 (TKBPACTL00, TKBPACTL01) to 0. Also, be sure to clear (0) bit 7 (CMPIF1) in interrupt request flag register 2L (IF2L). If bits C1FCK1 and C1FCK0 are changed from 00B (no comparator 1 filter) to a value other than 00B (comparator 1 filter enabled), allow four sampling times to elapse until the filter output is updated, and then use the comparator 1 interrupt request or the event signal to TMKB20.

2. If bits C0FCK1, C0FCK0, C0EPO, and C0EDG are changed, a comparator 0 interrupt request and an event signal to TMKB20 may be generated. Change these bits only after setting 16-bit timer KB2 counter restart select register 08 (ELSELR08) to 0, and bits 4 and 12 of forced output stop function control registers 0, 1 (TKBPACTL00, TKBPACTL01) to 0. Also, be sure to clear (0) bit 6 (CMPIF0) in interrupt request flag register 2L (IF2L). If bits C0FCK1 and C0FCK0 are changed from 00B (no comparator 0 filter) to a value other than 00B (comparator 0 filter enabled), allow four sampling times to elapse until the filter output is updated, and then use the comparator 0 interrupt request or the event signal to TMKB20.

13.3.4 Comparator output control register (COMPOCR)

Figure 13-5. Format of Comparator Output Control Register (COMPOCR)

Address: F0342H After reset: 00H R/W

Symbol	<7>	<6>	<5>	<4>	3	<2>	<1>	<0>
COMPOCR	SPDMD	C1OP	C1OE	C1IE	0	C0OP	C0OE	C0IE

SPDMD	Comparator speed selection[Note 1]
0	Comparator low-speed mode
1	Comparator high-speed mode

C1OP	VCOUT1 output polarity selection
0	Comparator 1 output is output to VCOUT1
1	Inverted comparator 1 output is output to VCOUT1

C1OE	VCOUT1 pin output enable
0	Comparator 1 VCOUT1 pin output disabled
1	Comparator 1 VCOUT1 pin output enabled

C1IE	Comparator 1 interrupt request enable[Note 2]
0	Comparator 1 interrupt request disabled
1	Comparator 1 interrupt request enabled

C0OP	VCOUT0 output polarity selection
0	Comparator 0 output is output to VCOUT0
1	Inverted comparator 0 output is output to VCOUT0

C0OE	VCOUT0 pin output enable
0	Comparator 0 VCOUT0 pin output disabled
1	Comparator 0 VCOUT0 pin output enabled

C0IE	Comparator 0 interrupt request enable[Note 3]
0	Comparator 0 interrupt request disabled
1	Comparator 0 interrupt request enabled

Notes 1. When rewriting the SPDMD bit, be sure to set the CiENB bit (i = 0 or 1) in the COMPMDR register to 0 in advance.

2. If C1IE is changed from 0 (interrupt requests disabled) to 1 (interrupt requests enabled), bit 7 (CMPIF1) in interrupt request flag register 2L (IF2L) might be set to 1 (interrupt requested), so be sure to clear (0) bit 7 (CMPIF1) in interrupt request flag register 2L (IF2L) before using interrupts.

3. If C0IE is changed from 0 (interrupt requests disabled) to 1 (interrupt requests enabled), bit 6 (CMPIF0) in interrupt request flag register 2L (IF2L) might be set to 1 (interrupt requested), so be sure to clear (0) bit 6 (CMPIF0) in interrupt request flag register 2L (IF2L) before using interrupts.

13.3.5 Registers controlling port functions of analog input pins

When using the IVREF0 pin for analog input of the comparator, set bit 2 of LCD port function register 3 (PFSEG3), bit 5 of the port mode register 4 (PM4) and the port mode control register 4 (PMC4) to 1.

When using the IVCMP0, IVCMP1, and IVREF1 pins for analog input of the comparator, set the port mode register (PMxx) and the port mode control register (PMCxx) bit corresponding to each port to 1.

When using the VCOUT0 and VCOUT1 functions, set the registers (port mode register (PMxx) and port register (Pxx) that control the port functions shared with the target channels.

For details, see **4.3.1 Port mode registers (PMxx)**, **4.3.2 Port registers (Pxx),** and **4.3.9 LCD port function registers 0 to 6 (PFSEG0 to PFSEG6)**.

13.4 Operation

Comparator 0 and comparator 1 operate independently. Their setting methods are not the same but operations are the same. Table 13-2 lists the Procedure for Setting Comparator Associated Registers.

Table 13-2. Procedure for Setting Comparator Associated Registers

Step	Register	Bit	Setting Value		
1	PER1	CMPEN	1 (input clock supply)		
2	PFSEG3	PFDEG	Select the function of pins IVCMPi and IVREFi. Set the PFDEG bit to 1 (digital input invalid) (only when IVREF0 is used). Set the PMC4n bit to 1 (analog input). Set the PM4n bit to 1 (input mode).		
	PMC4	PMC4n			
	PM4	PM4n			
3	COMPOCR	SPDMD	Select the comparator response speed (0: Low-speed mode/1: High-speed mode).[Note 1]		
4	COMPMDR	CiWDE	0 (standard mode)		1 (window mode)[Note 2]
		CiVRF	0 (Reference = IVREFi input)	1 (Reference = internal reference voltage (1.45 V))[Note 4]	Window comparator operation (reference = internal VREF)
		CiENB	1 (operation enabled)		
5	Wait for comparator stabilization time t_{CMP}				
6	COMPFIR	CiFCK1, CiFCK0	Select whether the digital filter is used or not and the sampling clock.		
		CiEPO, CiEDG	Select the edge detection condition for an interrupt request (rising edge/falling edge/both edges).		
7	COMPOCR	CiOP, CiOE	Set the VCOUTi output (select the polarity and set output enabled or disabled). See **13.4.3 Comparator i output (i = 0 or 1)**.		
		CiIE	Set the interrupt request output enabled or disabled. See **13.4.3 Comparator i output (i = 0 or 1)**.		
8	PR2L	CMPPR0i, CMPPR1i	When using an interrupt: Select the interrupt priority level.		
9	MK2L	CMPMKi	When using an interrupt: Select the interrupt masking.		
10	IF2L	CMPIFi	When using an interrupt: 0 (no interrupt requested: initialization)[Note 3]		

Notes 1. Comparator 0 and comparator 1 cannot be set independently.
2. Can be set in high-speed mode (SPDMD = 1).
3. After the setting of the comparator, an unnecessary interrupt may occur until operation becomes stable, so initialize the interrupt flag.
4. Can be set in HS (high-speed main) mode.

Remark i = 0, 1, n = 2 to 5

Figures 13-6 and 13-7 show comparator i (i = 0 or 1) operation examples. In standard mode, the CiMON bit in the COMPMDR register is set to 1 when the analog input voltage is higher than the reference input voltage, and the CiMON bit is set to 0 when the analog input voltage is lower than the reference input voltage.

In window mode, the CiMON bit in the COMPMDR register is set to 1 when the analog input voltage meets the following condition, and the CiMON bit is set to 0 when the analog input voltage does not meet the following condition:

“Low-voltage reference voltage < analog input voltage < high-voltage reference voltage”

When using the comparator i interrupt, set CiIE in the COMPOCR register to 1 (interrupt request enabled). If the comparison result changes at this time, a comparator i interrupt request is generated. For details on interrupt requests, see **13.4.2 Comparator i (i = 0 or 1) interrupts**.

Figure 13-6. Example of Comparator i (i = 0 or 1) Operation in Standard Mode

• Operation example in standard mode

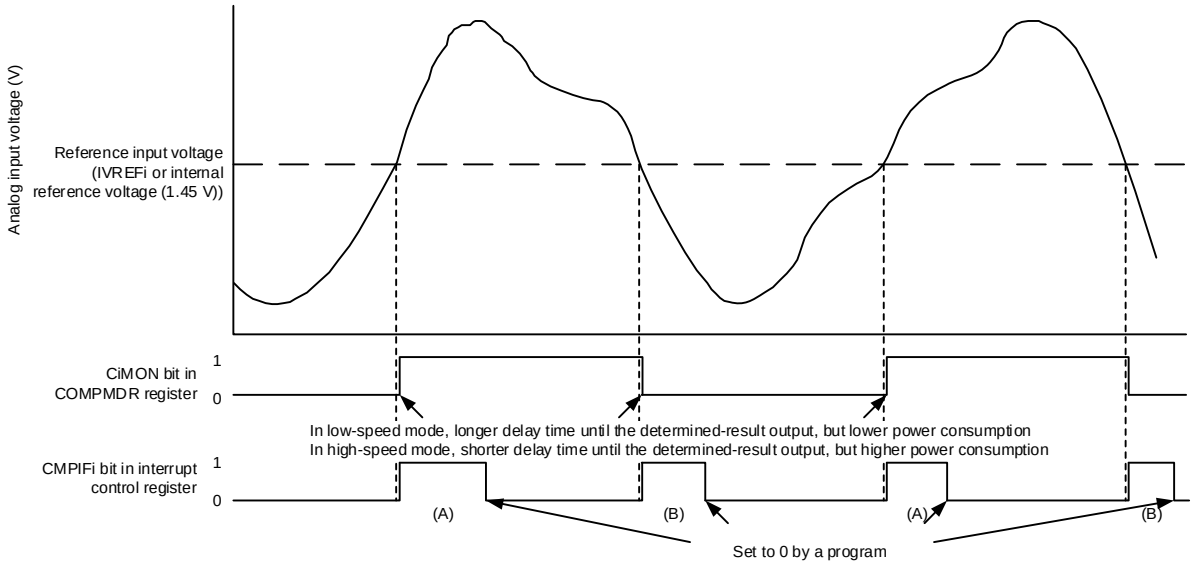

Caution The above diagram applies when CiFCK1 and CiFCK0 in the COMPFIR register = 00B (no filter) and CiEDG = 1 (both edges). When CiEDG = 0 and CiEPO = 0 (rising edge), CMPIFi changes as shown by (A) only. When CiEDG = 0 and CiEPO = 1 (falling edge), CMPIFi changes as shown by (B) only.

Figure 13-7. Example of Comparator i (i = 0 or 1) Operation in Window Mode

• Operation example in window mode

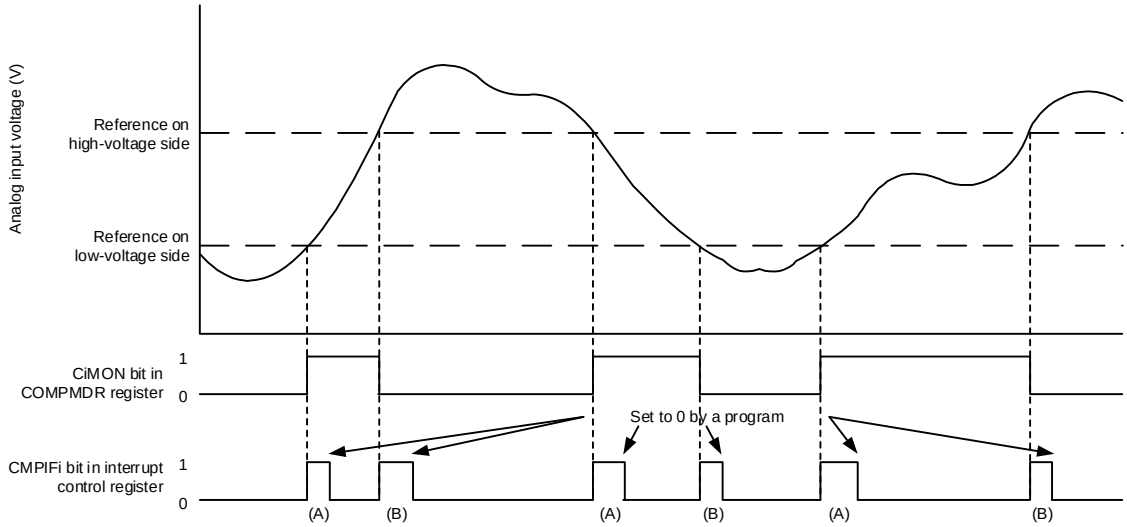

Caution The above diagram applies when CiFCK1 and CiFCK0 in the COMPFIR register = 00B (no filter) and CiEDG = 1 (both edges). When CiEDG = 0 and CiEPO = 0 (rising edge), CMPIFi changes as shown by (A) only. When CiEDG = 0 and CiEPO = 1 (falling edge), CMPIFi changes as shown by (B) only.

13.4.1 Comparator i digital filter (i = 0 or 1)

Comparator i contains a digital filter. The sampling clock can be selected by bits CiFCK1 and CiFCK0 in the COMPFIR register. The comparator i output signal is sampled every sampling clock, and when the level matches three times, that value is determined as the digital filter output at the next sampling clock.

Figure 13-8 shows the comparator i (i = 0 or 1) digital filter and interrupt operation example.

Figure 13-8. Comparator i (i = 0 or 1) Digital Filter and Interrupt Operation Example

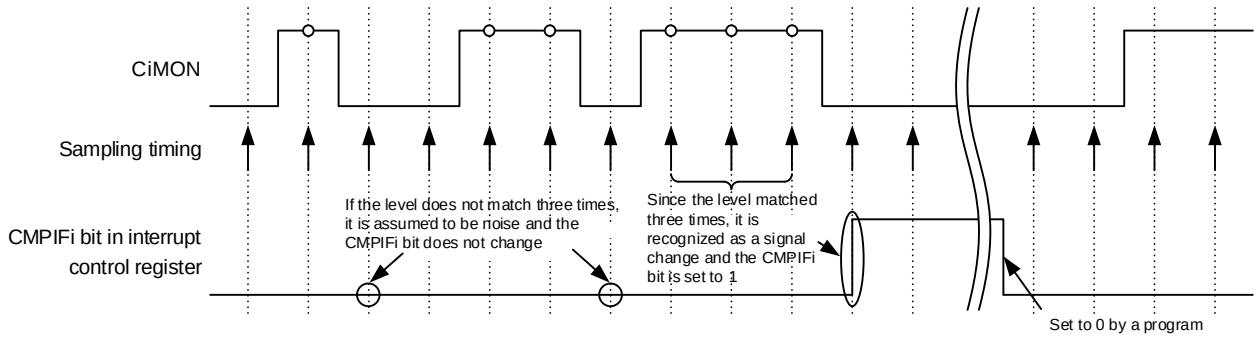

Caution The above operation example applies when bits CiFCK1 and CiFCK0 in the COMPFIR register is 01B, 10B, or 11B (digital filter enabled).

13.4.2 Comparator i (i = 0 or 1) interrupts

The comparator generates interrupt requests from two sources, comparator 0 and comparator 1. The comparator i interrupt each uses a priority level specification flag, an interrupt mask flag, an interrupt request flag, and a single vector.

When using the comparator i interrupt, set the CiIE bit in the COMPOCR register to 1 (interrupt request output enabled). The condition for interrupt request generation can be set by the COMPFIR register. The comparator outputs can also be passed through the digital filter. Three different sampling clocks can be selected for the digital filter.

For details on the register setting and interrupt request generation, see **13.3.3 Comparator filter control register (COMPFIR)** and **13.3.4 Comparator output control register (COMPOCR)**.

13.4.3 Comparator i output (i = 0 or 1)

The comparison result from the comparator can be output to external pins. Bits CiOP and CiOE in the COMPOCR register can be used to set the output polarity (non-inverted output or inverted output) and output enabled or disabled. For the correspondence between the register setting and the comparator output, see **13.3.4 Comparator output control register (COMPOCR)**.

To output the comparator comparison result to the VCOUTi output pin, use the following procedure to set the ports. Note that the ports are set to input after reset.

<1> Set the mode for the comparator (Steps 2 to 5 as listed in **Table 13-2 Procedure for Setting Comparator Associated Registers**).
<2> Set the VCOUTi output for the comparator (set the COMPOCR register to select the polarity and enable the output).
<3> Set the corresponding port mode control register bit for the VCOUTi output pin to 0.
<4> Set the corresponding port register bit for the VCOUTi output pin to 0.
<5> Set the corresponding port direction register for the VCOUTi output pin to output (start outputting from the pin).

13.4.4 Stopping or supplying comparator clock

To stop the comparator clock by setting peripheral enable register 1 (PER1), use the following procedure:

<1> Set the CiENB bit in the COMPMDR register to 0 (stop the comparator).
<2> Set the CMPIFi bit in registers IF2L to 0 (clear any unnecessary interrupt before stopping the comparator).
<3> Set the CMPEN bit in the PER1 register to 0.

When the clock is stopped by setting PER1, all the internal registers in the comparator are initialized. To use the comparator again, follow the procedure in Table 13-2 to set the registers.

Caution The temperature sensor output cannot be A/D converted while the comparator n reference voltage select bit (CnVRF) in the comparator mode setting register (COMPMDR) is 1 (comparator n reference voltage is internal reference voltage (1.45 V)). (n = 0, 1)

CHAPTER 14 SERIAL ARRAY UNIT

Serial array unit has up to four serial channels. Each channel can achieve simplified SPI (CSI[Note]), UART, and simplified I^{2}C communication.

Function assignment of each channel supported by the RL78/L13 is as shown below.

<R> **Note** Although the CSI function is generally called SPI, it is also called CSI in this product, so it is referred to as such in this manual.

- 64-pin products

Unit	Channel	Used as Simplified SPI (CSI)	Used as UART	Used as Simplified I^{2}C
0	0	CSI00	UART0 (supporting LIN-bus)	IIC00
	1	–		–
	2	CSI10	UART1	IIC10
	3	–		–
1	0	–	UART2	–
	1	–		–

- 80-pin products

Unit	Channel	Used as Simplified SPI (CSI)	Used as UART	Used as Simplified I^{2}C
0	0	CSI00	UART0 (supporting LIN-bus)	IIC00
	1	–		–
	2	CSI10	UART1	IIC10
	3	–		–
1	0	–	UART2	–
	1	–		–
	2	–	UART3	–
	3	–		–

When “UART0” is used for channels 0 and 1 of the unit 0, CSI00 and IIC00 cannot be used, but CSI10, UART1, or IIC10 can be used.

Caution Most of the following descriptions in this chapter use the units and channels of the 80-pin products as an example.

14.1 Functions of Serial Array Unit

Each serial interface supported by the RL78/L13 has the following features.

14.1.1 Simplified SPI (CSI00, CSI10)

Data is transmitted or received in synchronization with the serial clock (SCK) output from the master channel. Simplified SPI communication is clocked communication performed by using three communication lines: one for the serial clock (SCK), one for transmitting serial data (SO), one for receiving serial data (SI).

For details about the settings, see **14.5 Operation of Simplified SPI (CSI00, CSI10) Communication.**

[Data transmission/reception]

- Data length of 7 or 8 bits
- Phase control of transmit/receive data
- MSB/LSB first selectable

[Clock control]

- Master/slave selection
- Phase control of I/O clock
- Setting of transfer period by prescaler and internal counter of each channel
- Maximum transfer rate[Note]

  During master communication: Max. $f_{CLK}/2$ (CSI00 only)
  Max. $f_{CLK}/4$
  During slave communication: Max. $f_{MCK}/6$

[Interrupt function]

- Transfer end interrupt/buffer empty interrupt

[Error detection flag]

- Overrun error

In addition, CSI00 supports the SNOOZE mode. When SCK input is detected while in the STOP mode, the SNOOZE mode makes data reception that does not require the CPU possible. Only CSI00 can be specified for asynchronous reception.

Note Use the clocks within a range satisfying the SCK cycle time (t_{KCY}) characteristics. For details, see **CHAPTER 32 ELECTRICAL SPECIFICATIONS (T_A = –40 to +85°C)** and **CHAPTER 33 ELECTRICAL SPECIFICATIONS (T_A = –40 to +105°C)**.

14.1.2 UART (UART0 to UART3)

This is a start-stop synchronization function using two lines: serial data transmission (TxD) and serial data reception (RxD) lines. By using these two communication lines, each data frame, which consist of a start bit, data, parity bit, and stop bit, is transferred asynchronously (using the internal baud rate) between the microcontroller and the other communication party. Full-duplex UART communication can be performed by using a channel dedicated to transmission (even-numbered channel) and a channel dedicated to reception (odd-numbered channel). The LIN-bus can be implemented by using timer array unit with an external interrupt (INTP0).

For details about the settings, see **14.6 Operation of UART (UART0 to UART3) Communication.**

[Data transmission/reception]

- Data length of 7, 8, or 9 bits[Note]
- Select the MSB/LSB first
- Select of reverse
- Parity bit appending and parity check functions
- Stop bit appending

[Interrupt function]

- Transfer end interrupt/buffer empty interrupt
- Error interrupt in case of framing error, parity error, or overrun error

[Error detection flag]

- Framing error, parity error, or overrun error

In addition, UART0 and UART2 reception support the SNOOZE mode. When RxD input is detected while in the STOP mode, the SNOOZE mode makes data reception that does not require the CPU possible. Only UART0, UART2 can be specified for asynchronous reception.

The LIN-bus is accepted in UART0 (0 and 1 channels of unit 0).

[LIN-bus functions]

- Wakeup signal detection
- Break field (BF) detection
- Sync field measurement, baud rate calculation

} Using the external interrupt (INTP0) and timer array unit

Note Only UART0, UART2 can be specified for the 9-bit data length.

14.1.3 Simplified I²C (IIC00, IIC10)

This is a clocked communication function to communicate with two or more devices by using two lines: serial clock (SCL) and serial data (SDA). This simplified I²C is designed for single communication with a device such as EEPROM, flash memory, or A/D converter, and therefore, it functions only as a master.

Make sure by using software, as well as operating the control registers, that the AC specifications of the start and stop conditions are observed.

For details about the settings, see **14.8 Operation of Simplified I²C (IIC00, IIC10) Communication.**

[Data transmission/reception]

- Master transmission, master reception (only master function with a single master)
- ACK output function[Note] and ACK detection function
- Data length of 8 bits (When an address is transmitted, the address is specified by the higher 7 bits, and the least significant bit is used for R/W control.)
- Manual generation of start condition and stop condition

[Interrupt function]

- Transfer end interrupt

[Error detection flag]

- ACK error, or overrun error

* [Functions not supported by simplified I²C]

- Slave transmission, slave reception
- Arbitration loss detection function
- Wait detection functions

Note When receiving the last data, ACK will not be output if 0 is written to the SOEmn bit (serial output enable register m (SOEm)) and serial communication data output is stopped. See the processing flow in **14.8.3 (2)** for details.

Remarks 1. To use an I²C bus of full function, see **CHAPTER 15 SERIAL INTERFACE IICA**.

2. m: Unit number (m = 0), n: Channel number (n = 0, 2)

14.2 Configuration of Serial Array Unit

The serial array unit includes the following hardware.

Table 14-1. Configuration of Serial Array Unit

Item	Configuration
Shift register	8 bits or 9 bits[Note 1]
Buffer register	Lower 8 bits or 9 bits of serial data register mn (SDRmn)[Notes 1, 2]
Serial clock I/O	SCK00, SCK10 pins (for Simplified SPI), SCL00, SCL10 pins (for simplified I^2C)
Serial data input	SI00, SI10 pins (for Simplified SPI), RxD1 to RxD3 pins (for UART), RxD0 pin (for UART supporting LIN-bus)
Serial data output	SO00, SO10 pins (for Simplified SPI), TxD1 to TxD3 pins (for UART), TxD0 pin (for UART supporting LIN-bus)
Serial data I/O	SDA00, SDA10 pins (for simplified I^2C)
Control registers	<Registers of unit setting block> ● Peripheral enable register 0 (PER0) ● Serial clock select register m (SPSm) ● Serial channel enable status register m (SEm) ● Serial channel start register m (SSm) ● Serial channel stop register m (STm) ● Serial output enable register m (SOEm) ● Serial output register m (SOm) ● Serial output level register m (SOLm) ● Serial standby control register m (SSCm) ● Input switch control register (ISC) ● Noise filter enable register 0 (NFEN0)
	<Registers of each channel> ● Serial data register mn (SDRmn) ● Serial mode register mn (SMRmn) ● Serial communication operation setting register mn (SCRmn) ● Serial status register mn (SSRmn) ● Serial flag clear trigger register mn (SIRmn)
	● Port input mode registers 0, 1, 3 (PIM0, PIM1, PIM3) ● Port output mode registers 0, 1, 3 (POM0, POM1, POM3) ● Port mode registers 0, 1, 3 (PM0, PM1, PM3) ● Port registers 0, 1, 3 (P0, P1, P3)

Notes 1. The number of bits used as the shift register and buffer register differs depending on the unit and channel.
- mn = 00, 01, 10, 11: lower 9 bits
- Other than above: lower 8 bits

2. The lower 8 bits of serial data register mn (SDRmn) can be read or written as the following SFR, depending on the communication mode.
- CSIp communication … SIOp (CSIp data register)
- UARTq reception … RXDq (UARTq receive data register)
- UARTq transmission … TXDq (UARTq transmit data register)
- IICr communication … SIOr (IICr data register)

Remark m: Unit number (m = 0, 1), n: Channel number (n = 0 to 3), p: CSI number (p = 00, 10), q: UART number (q = 0 to 3), r: IIC number (r = 00, 10)

Figure 14-1 shows the block diagram of serial array unit 0.

Figure 14-1. Block Diagram of Serial Array Unit 0

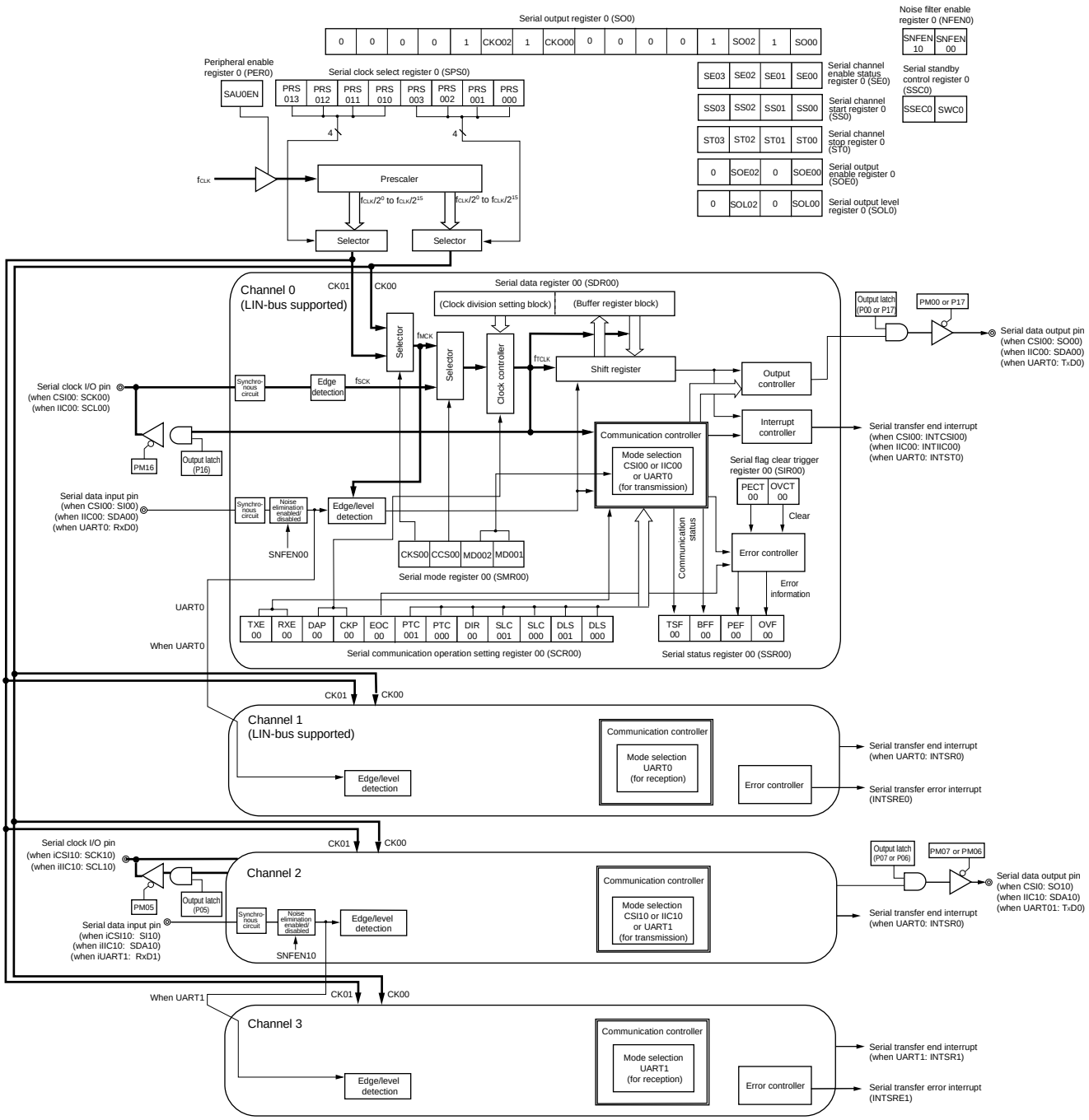

Figure 14-2 shows the block diagram of serial array unit 1.

Figure 14-2. Block Diagram of Serial Array Unit 1 (80-pin products)

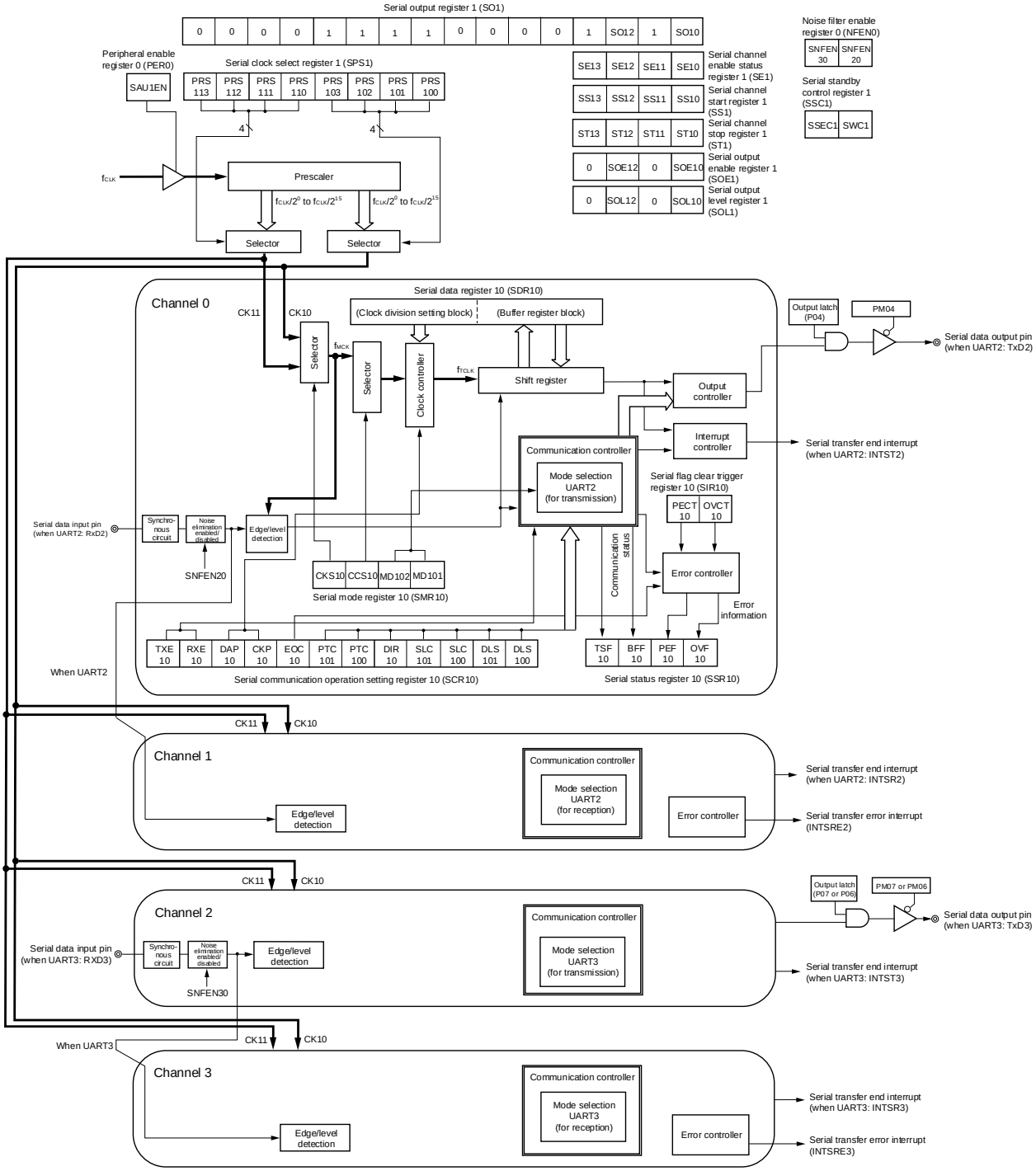

14.2.1 Shift register

This is a 9-bit register that converts parallel data into serial data or vice versa.

In case of the UART communication of nine bits of data, nine bits (bits 0 to 8) are used[Note 1].

During reception, it converts data input to the serial pin into parallel data.

When data is transmitted, the value set to this register is output as serial data from the serial output pin.

The shift register cannot be directly manipulated by program.

To read or write the shift register, use the lower 8/9 bits of serial data register mn (SDRmn).

	8	7	6	5	4	3	2	1	0
Shift register									

14.2.2 Lower 8/9 bits of the serial data register mn (SDRmn)

The SDRmn register is the transmit/receive data register (16 bits) of channel n. Bits 8 to 0 (lower 9 bits)[Note 1] or bits 7 to 0 (lower 8 bits) function as a transmit/receive buffer register, and bits 15 to 9 are used as a register that sets the division ratio of the operation clock (f_{MCK}).

When data is received, parallel data converted by the shift register is stored in the lower 8/9 bits. When data is to be transmitted, set transmit to be transferred to the shift register to the lower 8/9 bits.

The data stored in the lower 8/9 bits of this register is as follows, depending on the setting of bits 0 and 1 (DLSmn0, DLSmn1) of serial communication operation setting register mn (SCRmn), regardless of the output sequence of the data.

- 7-bit data length (stored in bits 0 to 6 of SDRmn register)
- 8-bit data length (stored in bits 0 to 7 of SDRmn register)
- 9-bit data length (stored in bits 0 to 8 of SDRmn register)[Note 1]

The SDRmn register can be read or written in 16-bit units.

The lower 8/9 bits of the SDRmn register can be read or written[Note 2] as the following SFR, depending on the communication mode.

- CSIp communication … SIOp (CSIp data register)
- UARTq reception … RXDq (UARTq receive data register)
- UARTq transmission … TXDq (UARTq transmit data register)
- IICr communication … SIOr (IICr data register)

Reset signal generation clears the SDRmn register to 0000H.

Notes 1. Only UART0, UART2 can be specified for the 9-bit data length.

2. When operation is stopped (SEmn = 0), do not rewrite SDRmn[7:0] by an 8-bit memory manipulation instruction (SDRmn[15:9] are all cleared to 0).

Remarks 1. After data is received, “0” is stored in bits 0 to 8 in bit portions that exceed the data length.

2. m: Unit number (m = 0, 1), n: Channel number (n = 0 to 3), p: CSI number (p = 00, 10), q: UART number (q = 0 to 3), r: IIC number (r = 00, 10)

Figure 14-3. Format of Serial Data Register mn (SDRmn) (mn = 00, 01, 10, 11)

Address: FFF10H, FFF11H (SDR00), FFF12H, FFF13H (SDR01), FFF48H, FFF49H (SDR10), FFF4AH, FFF4BH (SDR11) After reset: 0000H R/W

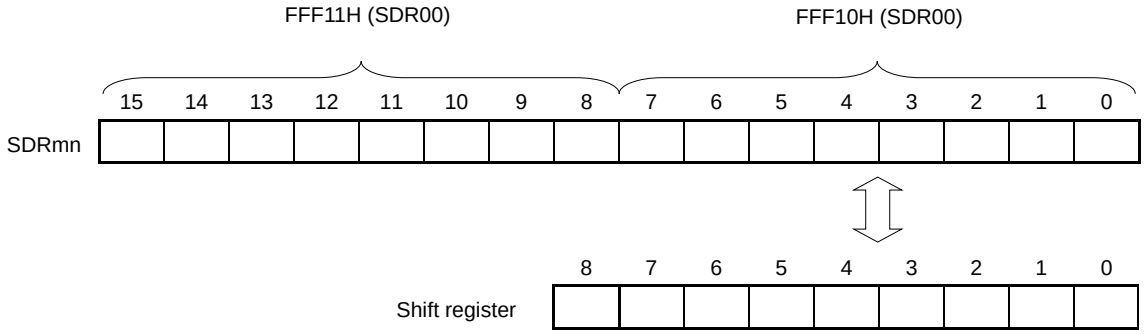

Remark For the function of the higher 7 bits of the SDRmn register, see **14.3 Registers Controlling Serial Array Unit**.

Figure 14-4. Format of Serial Data Register mn (SDRmn) (mn = 02, 03, 12, 13)

Address: FFF44H, FFF45H (SDR02), FFF46H, FFF47H (SDR03), FFF14H, FFF15H (SDR12), FFF16H, FFF17H (SDR13) After reset: 0000H R/W

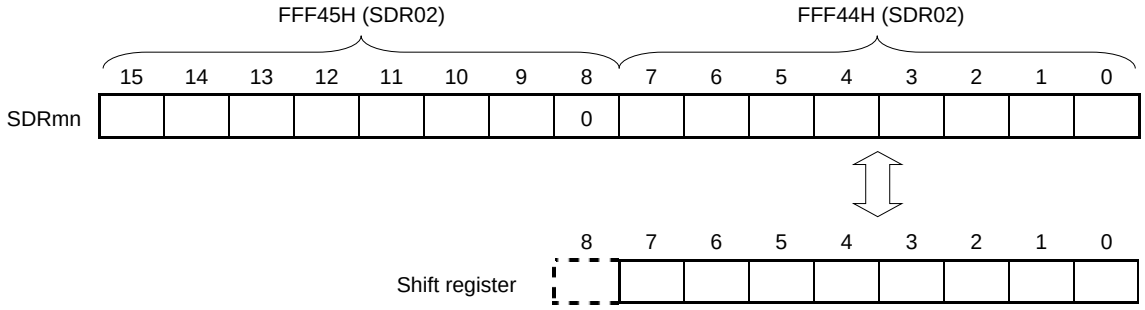

Caution Be sure to clear bit 8 to "0".

Remark For the function of the higher 7 bits of the SDRmn register, see **14.3 Registers Controlling Serial Array Unit**.

14.3 Registers Controlling Serial Array Unit

The serial array unit is controlled by the following registers.

- Peripheral enable register 0 (PER0)
- Serial clock select register m (SPSm)
- Serial mode register mn (SMRmn)
- Serial communication operation setting register mn (SCRmn)
- Serial data register mn (SDRmn)
- Serial flag clear trigger register mn (SIRmn)
- Serial status register mn (SSRmn)
- Serial channel start register m (SSm)
- Serial channel stop register m (STm)
- Serial channel enable status register m (SEm)
- Serial output enable register m (SOEm)
- Serial output level register m (SOLm)
- Serial output register m (SOm)
- Serial standby control register m (SSCm)
- Input switch control register (ISC)
- Noise filter enable register 0 (NFEN0)
- Port input mode registers 0, 1, 3 (PIM0, PIM1, PIM3)
- Port output mode registers 0, 1, 3 (POM0, POM1, POM3)
- Port mode registers 0, 1, 3 (PM0, PM1, PM3)
- Port registers 0, 1, 3 (P0, P1, P3)

Remark m: Unit number (m = 0, 1), n: Channel number (n = 0 to 3)

14.3.1 Peripheral enable register 0 (PER0)

PER0 is used to enable or disable supplying the clock to the peripheral hardware. Clock supply to a hardware macro that is not used is stopped in order to reduce the power consumption and noise.

When serial array unit 0 is used, be sure to set bit 2 (SAU0EN) of this register to 1.

When serial array unit 1 is used, be sure to set bit 3 (SAU1EN) of this register to 1.

The PER0 register can be set by a 1-bit or 8-bit memory manipulation instruction.

Reset signal generation clears the PER0 register to 00H.

Figure 14-5. Format of Peripheral Enable Register 0 (PER0)

Address: F00F0H After reset: 00H R/W

Symbol	<7>	6	<5>	<4>	<3>	<2>	1	<0>
PER0	RTCWEN	0	ADCEN	IICA0EN	SAU1EN	SAU0EN	0	TAU0EN

SAUmEN	Control of serial array unit m input clock supply
0	Stops supply of input clock. ● SFR used by serial array unit m cannot be written. ● Serial array unit m is in the reset status.
1	Enables input clock supply. ● SFR used by serial array unit m can be read/written.

Cautions 1. When setting serial array unit m, be sure to first set the following registers with the SAUmEN bit set to 1. If SAUmEN = 0, control registers of serial array unit m become default values and writing to them is ignored (except for the input switch control register (ISC), noise filter enable register 0 (NFEN0), port input mode registers 0, 1, 3 (PIM0, PIM1, PIM3), port output mode registers 0, 1, 3 (POM0, POM1, POM3), port mode registers 0, 1, 3 (PM0, PM1, PM3), and port registers 0, 1, 3 (P0, P1, P3)).

- **Serial clock select register m (SPSm)**
- **Serial mode register mn (SMRmn)**
- **Serial communication operation setting register mn (SCRmn)**
- **Serial data register mn (SDRmn)**
- **Serial flag clear trigger register mn (SIRmn)**
- **Serial status register mn (SSRmn)**
- **Serial channel start register m (SSm)**
- **Serial channel stop register m (STm)**
- **Serial channel enable status register m (SEm)**
- **Serial output enable register m (SOEm)**
- **Serial output level register m (SOLm)**
- **Serial output register m (SOm)**
- **Serial standby control register m (SSCm)**

2. Be sure to clear bits 1 and 6 to “0”.

14.3.2 Serial clock select register m (SPSm)

The SPSm register is a 16-bit register that is used to select two types of operation clocks (CKm0, CKm1) that are commonly supplied to each channel. CKm1 is selected by bits 7 to 4 of the SPSm register, and CKm0 is selected by bits 3 to 0.

Rewriting the SPSm register is prohibited when the register is in operation (when SEmn = 1).

The SPSm register can be set by a 16-bit memory manipulation instruction.

The lower 8 bits of the SPSm register can be set with an 8-bit memory manipulation instruction with SPSmL.

Reset signal generation clears the SPSm register to 0000H.

Figure 14-6. Format of Serial Clock Select Register m (SPSm)

Address: F0126H, F0127H (SPS0), F0166H, F0167H (SPS1) After reset: 0000H R/W

Symbol	15	14	13	12	11	10	9	8	7	6	5	4	3	2	1	0
SPSm	0	0	0	0	0	0	0	0	PRS m13	PRS m12	PRS m11	PRS m10	PRS m03	PRS m02	PRS m01	PRS m00

PRS mk3	PRS mk2	PRS mk1	PRS mk0	Section of operation clock (CKmk)[Note]					
					f_{CLK} = 2 MHz	f_{CLK} = 5 MHz	f_{CLK} = 10 MHz	f_{CLK} = 20 MHz	f_{CLK} = 24 MHz
0	0	0	0	f_{CLK}	2 MHz	5 MHz	10 MHz	20 MHz	24 MHz
0	0	0	1	$f_{CLK}/2$	1 MHz	2.5 MHz	5 MHz	10 MHz	12 MHz
0	0	1	0	$f_{CLK}/2^2$	500 kHz	1.25 MHz	2.5 MHz	5 MHz	6 MHz
0	0	1	1	$f_{CLK}/2^3$	250 kHz	625 kHz	1.25 MHz	2.5 MHz	3 MHz
0	1	0	0	$f_{CLK}/2^4$	125 kHz	313 kHz	625 kHz	1.25 MHz	1.5 MHz
0	1	0	1	$f_{CLK}/2^5$	62.5 kHz	156 kHz	313 kHz	625 kHz	750 KHz
0	1	1	0	$f_{CLK}/2^6$	31.3 kHz	78.1 kHz	156 kHz	313 kHz	375 kHz
0	1	1	1	$f_{CLK}/2^7$	15.6 kHz	39.1 kHz	78.1 kHz	156 kHz	187.5 kHz
1	0	0	0	$f_{CLK}/2^8$	7.81 kHz	19.5 kHz	39.1 kHz	78.1 kHz	93.8 kHz
1	0	0	1	$f_{CLK}/2^9$	3.91 kHz	9.77 kHz	19.5 kHz	39.1 kHz	46.9 kHz
1	0	1	0	$f_{CLK}/2^{10}$	1.95 kHz	4.88 kHz	9.77 kHz	19.5 kHz	23.4 kHz
1	0	1	1	$f_{CLK}/2^{11}$	977 Hz	2.44 kHz	4.88 kHz	9.77 kHz	11.7 kHz
1	1	0	0	$f_{CLK}/2^{12}$	488 Hz	1.22 kHz	2.44 kHz	4.88 kHz	5.86 kHz
1	1	0	1	$f_{CLK}/2^{13}$	244 Hz	610 Hz	1.22 kHz	2.44 kHz	2.93 kHz
1	1	1	0	$f_{CLK}/2^{14}$	122 Hz	305 Hz	610 Hz	1.22 kHz	1.46 kHz
1	1	1	1	$f_{CLK}/2^{15}$	61 Hz	153 kHz	305 Hz	610 Hz	732 Hz

Note When changing the clock selected for f_{CLK} (by changing the system clock control register (CKC) value), do so after having stopped (serial channel stop register m (STm) = 000FH) the operation of the serial array unit (SAU).

Caution Be sure to clear bits 15 to 8 to "0".

Remarks 1. f_{CLK}: CPU/peripheral hardware clock frequency

2. m: Unit number (m = 0, 1)

3. k = 0, 1

14.3.3 Serial mode register mn (SMRmn)

The SMRmn register is a register that sets an operation mode of channel n. It is also used to select an operation clock (f_{MCK}), specify whether the serial clock (f_{SCK}) may be input or not, set a start trigger, an operation mode (Simplified SPI (CSI), UART, or simplified I^2C), and an interrupt source. This register is also used to invert the level of the receive data only in the UART mode.

Rewriting the SMRmn register is prohibited when the register is in operation (when SEmn = 1). However, the MDmn0 bit can be rewritten during operation.

The SMRmn register can be set by a 16-bit memory manipulation instruction.

Reset signal generation sets the SMRmn register to 0020H.

Figure 14-7. Format of Serial Mode Register mn (SMRmn) (1/2)

Address: F0110H, F0111H (SMR00) to F0116H, F0117H (SMR03), F0150H, F0151H (SMR10) to F0156H, F0157H (SMR13) After reset: 0020H R/W

Symbol	15	14	13	12	11	10	9	8	7	6	5	4	3	2	1	0
SMRmn	CKS mn	CCS mn	0	0	0	0	0	STS mn[Note]	0	SIS mn0 [Note]	1	0	0	MD mn2	MD mn1	MD mn0

CKS mn	Selection of operation clock (f_{MCK}) of channel n
0	Operation clock CKm0 set by the SPSm register
1	Operation clock CKm1 set by the SPSm register
Operation clock (f_{MCK}) is used by the edge detector. In addition, depending on the setting of the CCSmn bit and the higher 7 bits of the SDRmn register, a transfer clock (f_{TCLK}) is generated.	

CCS mn	Selection of transfer clock (f_{TCLK}) of channel n
0	Divided operation clock f_{MCK} specified by the CKSmn bit
1	Clock input f_{SCK} from the SCKp pin (slave transfer in simplified SPI (CSI) mode)
Transfer clock f_{TCLK} is used for the shift register, communication controller, output controller, interrupt controller, and error controller. When CCSmn = 0, the division ratio of operation clock (f_{MCK}) is set by the higher 7 bits of the SDRmn register.	

STS mn	Selection of start trigger source
0	Only software trigger is valid (selected for simplified SPI (CSI), UART transmission, and simplified I^2C).
1	Valid edge of the RxDq pin (selected for UART reception)
Transfer is started when the above source is satisfied after 1 is set to the SSm register.	

Note The SMR01, SMR03, SMR11, and SMR13 registers only.

Caution Be sure to clear bits 13 to 9, 7, 4, and 3 (or bits 13 to 6, 4, and 3 for the SMR00, SMR02, SMR10, or SMR12 register) to "0". Be sure to set bit 5 to "1".

Remark m: Unit number (m = 0, 1), n: Channel number (n = 0 to 3), p: CSI number (p = 00, 10), q: UART number (q = 0 to 3), r: IIC number (r = 00, 10)

Figure 14-7. Format of Serial Mode Register mn (SMRmn) (2/2)

Address: F0110H, F0111H (SMR00) to F0116H, F0117H (SMR03), F0150H, F0151H (SMR10) to F0156H, F0157H (SMR13) After reset: 0020H R/W

Symbol	15	14	13	12	11	10	9	8	7	6	5	4	3	2	1	0
SMRmn	CKS mn	CCS mn	0	0	0	0	0	STS mn[Note]	0	SIS mn0 [Note]	1	0	0	MD mn2	MD mn1	MD mn0

SIS mn0	Controls inversion of level of receive data of channel n in UART mode
0	Falling edge is detected as the start bit. The input communication data is captured as is.
1	Rising edge is detected as the start bit. The input communication data is inverted and captured.

MD mn2	MD mn1	Setting of operation mode of channel n
0	0	Simplified SPI (CSI) mode
0	1	UART mode
1	0	Simplified I^2C mode
1	1	Setting prohibited

MD mn0	Selection of interrupt source of channel n
0	Transfer end interrupt
1	Buffer empty interrupt (Occurs when data is transferred from the SDRmn register to the shift register.)
For successive transmission, the next transmit data is written by setting the MDmn0 bit to 1 when SDRmn data has run out.	

Note The SMR01, SMR03, SMR11, and SMR13 registers only.

Caution Be sure to clear bits 13 to 9, 7, 4, and 3 (or bits 13 to 6, 4, and 3 for the SMR00, SMR02, SMR10, or SMR12 register) to "0". Be sure to set bit 5 to "1".

Remark m: Unit number (m = 0, 1), n: Channel number (n = 0 to 3), p: CSI number (p = 00, 10), q: UART number (q = 0 to 3), r: IIC number (r = 00, 10)

14.3.4 Serial communication operation setting register mn (SCRmn)

The SCRmn register is a communication operation setting register of channel n. It is used to set a data transmission/reception mode, phase of data and clock, whether an error signal is to be masked or not, parity bit, start bit, stop bit, and data length.

Rewriting the SCRmn register is prohibited when the register is in operation (when SEmn = 1).

The SCRmn register can be set by a 16-bit memory manipulation instruction.

Reset signal generation sets the SCRmn register to 0087H.

Figure 14-8. Format of Serial Communication Operation Setting Register mn (SCRmn) (1/2)

Address: F0118H, F0119H (SCR00) to F011EH, F011FH (SCR03), After reset: 0087H R/W
F0158H, F0159H (SCR10) to F015EH, F015FH (SCR13)

Symbol	15	14	13	12	11	10	9	8	7	6	5	4	3	2	1	0
SCRmn	TXEmn	RXEmn	DAPmn	CKPmn	0	EOCmn	PTCmn1	PTCmn0	DIRmn	0	SLCmn1[Note 1]	SLCmn0	0	1	DLSmn1[Note 2]	DLSmn0

TXEmn	RXEmn	Setting of operation mode of channel n
0	0	Disable communication.
0	1	Reception only
1	0	Transmission only
1	1	Transmission/reception

DAPmn	CKPmn	Selection of data and clock phase in simplified SPI (CSI) mode	Type
0	0	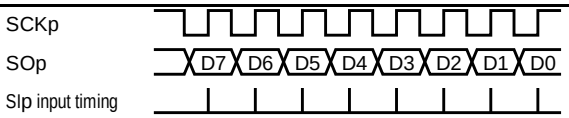	1
0	1	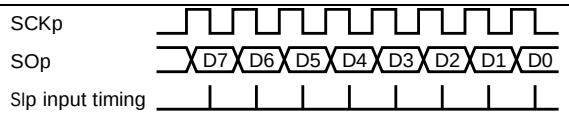	2
1	0	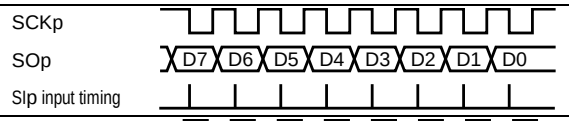	3
1	1	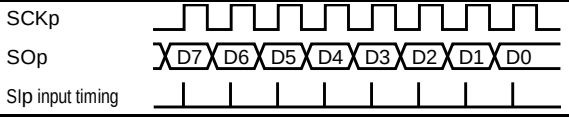	4
Be sure to set DAPmn, CKPmn = 0, 0 in the UART mode and simplified I^2C mode.			

EOCmn	Selection of masking of error interrupt signal (INTSREx (x = 0 to 3))
0	Masks error interrupt INTSREx (INTSRx is not masked).
1	Enables generation of error interrupt INTSREx (INTSRx is masked if an error occurs).
Set EOCmn = 0 in the simplified SPI (CSI) mode, simplified I^2C mode, and during UART transmission[Note 3].	

Notes 1. The SCR00, SCR02, SCR10, and SCR12 registers only.

2. The SCR00, SCR01, SCR10 and SCR11 registers only. Others are fixed to 1.

3. When using CSImn not with EOCmn = 0, error interrupt INTSREn may be generated.

Caution Be sure to clear bits 3, 6, and 11 to "0" (Also clear bit 5 of the SCR01, SCR03, SCR11, or SCR13 register to 0). Be sure to set bit 2 to "1".

Remark m: Unit number (m = 0, 1), n: Channel number (n = 0 to 3), p: CSI number (p = 00, 10)

Figure 14-8. Format of Serial Communication Operation Setting Register mn (SCRmn) (2/2)

Address: F0118H, F0119H (SCR00) to F011EH, F011FH (SCR03), F0158H, F0159H (SCR10) to F015EH, F015FH (SCR13) After reset: 0087H R/W

Symbol	15	14	13	12	11	10	9	8	7	6	5	4	3	2	1	0
SCRmn	TXEmn	RXEmn	DAPmn	CKPmn	0	EOCmn	PTCmn1	PTCmn0	DIRmn	0	SLCmn1[Note 1]	SLCmn0	0	1	DLSmn1[Note 2]	DLSmn0

PTCmn1	PTCmn0	Setting of parity bit in UART mode	
		Transmission	Reception
0	0	Does not output the parity bit.	Receives without parity
0	1	Outputs 0 parity[Note 3].	No parity judgment
1	0	Outputs even parity.	Judged as even parity.
1	1	Outputs odd parity.	Judges as odd parity.
Be sure to set PTCmn1, PTCmn0 = 0, 0 in the simplified SPI (CSI) mode and simplified I²C mode.			

DIRmn	Selection of data transfer sequence in simplified SPI (CSI) and UART modes
0	Inputs/outputs data with MSB first.
1	Inputs/outputs data with LSB first.
Be sure to clear DIRmn = 0 in the simplified I²C mode.	

SLCmn1[Note 1]	SLCmn0	Setting of stop bit in UART mode
0	0	No stop bit
0	1	Stop bit length = 1 bit
1	0	Stop bit length = 2 bits (mn = 00, 02, 10, 12 only)
1	1	Setting prohibited
When the transfer end interrupt is selected, the interrupt is generated when all stop bits have been completely transferred. Set 1 bit (SLCmn1, SLCmn0 = 0, 1) during UART reception and in the simplified I²C mode. Set no stop bit (SLCmn1, SLCmn0 = 0, 0) in the simplified SPI (CSI) mode. Set 1 bit (SLCmn1, SLCmn0 = 0, 1) or 2 bits (SLCmn1, SLCmn0 = 1, 0) during UART transmission.		

DLSmn1[Note 2]	DLSmn0	Setting of data length in simplified SPI (CSI) and UART modes
0	1	9-bit data length (stored in bits 0 to 8 of the SDRmn register) (settable in UART mode only)
1	0	7-bit data length (stored in bits 0 to 6 of the SDRmn register)
1	1	8-bit data length (stored in bits 0 to 7 of the SDRmn register)
Other than above		Setting prohibited
Be sure to set DLSmn1, DLSmn0 = 1, 1 in the simplified I²C mode.		

Notes 1. The SCR00, SCR02, SCR10, and SCR12 registers only.

2. The SCR00, SCR01, SCR10 and SCR11 registers only. Others are fixed to 1.

3. 0 is always added regardless of the data contents.

Caution Be sure to clear bits 3, 6, and 11 to "0" (Also clear bit 5 of the SCR01, SCR03, SCR11, or SCR13 register to 0). Be sure to set bit 2 to "1".

Remark m: Unit number (m = 0, 1), n: Channel number (n = 0 to 3), p: CSI number (p = 00, 10)

14.3.5 Serial data register mn (SDRmn)

The SDRmn register is the transmit/receive data register (16 bits) of channel n.

Bits 8 to 0 (lower 9 bits) of SDR00, SDR01, SDR10, SDR11 or bits 7 to 0 (lower 8 bits) of SDR02, SDR03, SDR12 and SDR13 function as a transmit/receive buffer register, and bits 15 to 9 are used as a register that sets the division ratio of the operation clock (f_{MCK}, f_{SCK}).

If the CCSmn bit of serial mode register mn (SMRmn) is cleared to 0, the clock set by dividing the operating clock by the higher 7 bits of the SDRmn register is used as the transfer clock.

If the CCSmn bit of serial mode register mn (SMRmn) is set to 1, set bits 15 to 9 (higher 7 bits) of SDR00, SDR01, SDR10, and SDR11 to 0000000B. The input clock f_{SCK} (slave transfer in simplified SPI (CSI) mode) from the SCKp pin is used as the transfer clock.

The lower 8/9 bits of the SDRmn register function as a transmit/receive buffer register. During reception, the parallel data converted by the shift register is stored in the lower 8/9 bits, and during transmission, the data to be transmitted to the shift register is set to the lower 8/9 bits.

The SDRmn register can be read or written in 16-bit units.

However, the higher 7 bits can be written or read only when the operation is stopped (SEmn = 0). During operation (SEmn = 1), a value is written only to the lower 8/9 bits of the SDRmn register. When the SDRmn register is read during operation, 0 is always read.

Reset signal generation clears the SDRmn register to 0000H.

Figure 14-9. Format of Serial Data Register mn (SDRmn)

Address: FFF10H, FFF11H (SDR00), FFF12H, FFF13H (SDR01), FFF48H, FFF49H (SDR10), FFF4AH, FFF4BH (SDR11) — After reset: 0000H R/W

	FFF11H (SDR00)								FFF10H (SDR00)							
Symbol	15	14	13	12	11	10	9	8	7	6	5	4	3	2	1	0
SDRmn								0								

Address: FFF44H, FFF45H (SDR02), FFF46H, FFF47H (SDR03), FFF14H, FFF15H (SDR12), FFF16H, FFF17H (SDR13) — After reset: 0000H R/W

	FFF45H (SDR02)								FFF44H (SDR02)							
Symbol	15	14	13	12	11	10	9	8	7	6	5	4	3	2	1	0
SDRmn								0								

SDRmn[15:9]							Transfer clock setting by dividing the operating clock (f_{MCK})
0	0	0	0	0	0	0	$f_{MCK}/2$
0	0	0	0	0	0	1	$f_{MCK}/4$
0	0	0	0	0	1	0	$f_{MCK}/6$
0	0	0	0	0	1	1	$f_{MCK}/8$
• • •	• • •	• • •	• • •	• • •	• • •	• • •	• • •
1	1	1	1	1	1	0	$f_{MCK}/254$
1	1	1	1	1	1	1	$f_{MCK}/256$

(**Cautions** and **Remarks** are listed on the next page.)

Cautions 1. Be sure to clear bit 8 of the SDR02, SDR03, SDR12, and SDR13 registers to "0".

2. Setting SDRmn[15:9] = (0000000B, 0000001B) is prohibited when UART is used.

3. Setting SDRmn[15:9] = 0000000B is prohibited when simplified I^2C is used. Set SDRmn[15:9] to 0000001B or greater.

4. When operation is stopped (SEmn = 0), do not rewrite SDRmn[7:0] by an 8-bit memory manipulation instruction (SDRmn[15:9] are all cleared to 0).

Remarks 1. For the function of the lower 8/9 bits of the SDRmn register, see **14.2 Configuration of Serial Array Unit**.

2. m: Unit number (m = 0, 1), n: Channel number (n = 0 to 3)

14.3.6 Serial flag clear trigger register mn (SIRmn)

The SIRmn register is a trigger register that is used to clear each error flag of channel n.

When each bit (FECTmn, PECTmn, OVCTmn) of this register is set to 1, the corresponding bit (FEFmn, PEFmn, OVFmn) of serial status register mn is cleared to 0. Because the SIRmn register is a trigger register, it is cleared immediately when the corresponding bit of the SSRmn register is cleared.

The SIRmn register can be set by a 16-bit memory manipulation instruction.

The lower 8 bits of the SIRmn register can be set with an 8-bit memory manipulation instruction with SIRmnL.

Reset signal generation clears the SIRmn register to 0000H.

Figure 14-10. Format of Serial Flag Clear Trigger Register mn (SIRmn)

Address: F0108H, F0109H (SIR00) to F010EH, F010FH (SIR03), F0148H, F0149H (SIR10) to F014EH, F014FH (SIR13) After reset: 0000H R/W

Symbol	15	14	13	12	11	10	9	8	7	6	5	4	3	2	1	0
SIRmn	0	0	0	0	0	0	0	0	0	0	0	0	0	FECTmn[Note]	PECTmn	OVCTmn

FECTmn	Clear trigger of framing error flag of channel n
0	Not cleared
1	Clears the FEFmn bit of the SSRmn register to 0.

PECTmn	Clear trigger of parity error flag of channel n
0	Not cleared
1	Clears the PEFmn bit of the SSRmn register to 0.

OVCTmn	Clear trigger of overrun error flag of channel n
0	Not cleared
1	Clears the OVFmn bit of the SSRmn register to 0.

Note The SIR01, SIR03, SIR11, and SIR13 registers only.

Caution Be sure to clear bits 15 to 3 (or bits 15 to 2 for the SIR00, SIR02, SIR10, or SIR12 register) to “0”.

Remarks 1. m: Unit number (m = 0, 1), n: Channel number (n = 0 to 3)

2. When the SIRmn register is read, 0000H is always read.

14.3.7 Serial status register mn (SSRmn)

The SSRmn register is a register that indicates the communication status and error occurrence status of channel n. The errors indicated by this register are a framing error, parity error, and overrun error.

The SSRmn register can be read by a 16-bit memory manipulation instruction.

The lower 8 bits of the SSRmn register can be set with an 8-bit memory manipulation instruction with SSRmnL.

Reset signal generation clears the SSRmn register to 0000H.

Figure 14-11. Format of Serial Status Register mn (SSRmn) (1/2)

Address: F0100H, F0101H (SSR00) to F0106H, F0107H (SSR03), F0140H, F0141H (SSR10) to F0146H, F0147H (SSR13) After reset: 0000H Rs

Symbol	15	14	13	12	11	10	9	8	7	6	5	4	3	2	1	0
SSRmn	0	0	0	0	0	0	0	0	0	TSF mn	BFF mn	0	0	FEF mn[Note]	PEF mn	OVF mn

TSF mn	Communication status indication flag of channel n
0	Communication is stopped or suspended.
1	Communication is in progress.

<Clear conditions>
- The STmn bit of the STm register is set to 1 (communication is stopped) or the SSmn bit of the SSm register is set to 1 (communication is suspended).
- Communication ends.

<Set condition>
- Communication starts.

BFF mn	Buffer register status indication flag of channel n
0	Valid data is not stored in the SDRmn register.
1	Valid data is stored in the SDRmn register.

<Clear conditions>
- Transferring transmit data from the SDRmn register to the shift register ends during transmission.
- Reading receive data from the SDRmn register ends during reception.
- The STmn bit of the STm register is set to 1 (communication is stopped) or the SSmn bit of the SSm register is set to 1 (communication is enabled).

<Set conditions>
- Transmit data is written to the SDRmn register while the TXEmn bit of the SCRmn register is set to 1 (transmission or transmission and reception mode in each communication mode).
- Receive data is stored in the SDRmn register while the RXEmn bit of the SCRmn register is set to 1 (reception or transmission and reception mode in each communication mode).
- A reception error occurs.

Note The SSR01, SSR03, SSR11, and SSR13 registers only.

Caution 1. If data is written to the SDRmn register when BFFmn = 1, the transmit/receive data stored in the register is discarded and an overrun error (OVFmn = 1) is detected.

<R> **2. When the simplified SPI (CSI) is handling reception in the SNOOZE mode (SWC0 = 1), the BFFmn flag will not change.**

Remark m: Unit number (m = 0, 1), n: Channel number (n = 0 to 3)

Figure 14-11. Format of Serial Status Register mn (SSRmn) (2/2)

Address: F0100H, F0101H (SSR00) to F0106H, F0107H (SSR03), F0140H, F0141H (SSR10) to F0146H, F0147H (SSR13) After reset: 0000H R

Symbol	15	14	13	12	11	10	9	8	7	6	5	4	3	2	1	0
SSRmn	0	0	0	0	0	0	0	0	0	TSF mn	BFF mn	0	0	FEF mn[Note]	PEF mn	OVF mn

FEF mn	Framing error detection flag of channel n
0	No error occurs.
1	An error occurs (during UART reception).

<Clear condition>
- 1 is written to the FECTmn bit of the SIRmn register.

<Set condition>
- A stop bit is not detected when UART reception ends.

PEF mn	Parity/ACK error detection flag of channel n
0	No error occurs.
1	Parity error occurs (during UART reception) or ACK is not detected (during I^2C transmission).

<Clear condition>
- 1 is written to the PECTmn bit of the SIRmn register.

<Set condition>
- The parity of the transmit data and the parity bit do not match when UART reception ends (parity error).
- No ACK signal is returned from the slave channel at the ACK reception timing during I^2C transmission (ACK is not detected).

OVF mn	Overrun error detection flag of channel n
0	No error occurs.
1	An error occurs

<Clear condition>
- 1 is written to the OVCTmn bit of the SIRmn register.

<Set condition>
- Even though receive data is stored in the SDRmn register, that data is not read and transmit data or the next receive data is written while the RXEmn bit of the SCRmn register is set to 1 (reception or transmission and reception mode in each communication mode).
- Transmit data is not ready for slave transmission or transmission and reception in simplified SPI (CSI) mode.

Note The SSR01, SSR03, SSR11, and SSR13 registers only.

<R> **Caution** **When the simplified SPI (CSI) is handling reception in the SNOOZE mode (SWC0 = 1), the OVFmn flag will not change.**

Remark m: Unit number (m = 0, 1), n: Channel number (n = 0 to 3)

14.3.8 Serial channel start register m (SSm)

The SSm register is a trigger register that is used to enable starting communication/count by each channel.

When 1 is written a bit of this register (SSmn), the corresponding bit (SEmn) of serial channel enable status register m (SEm) is set to 1 (Operation is enabled). Because the SSmn bit is a trigger bit, it is cleared immediately when SEmn = 1.

The SSm register can be set by a 16-bit memory manipulation instruction.

The lower 8 bits of the SSm register can be set with a 1-bit or 8-bit memory manipulation instruction with SSmL.

Reset signal generation clears the SSm register to 0000H.

Figure 14-12. Format of Serial Channel Start Register m (SSm)

Address: F0122H, F0123H (SS0) After reset: 0000H R/W

Symbol	15	14	13	12	11	10	9	8	7	6	5	4	3	2	1	0
SS0	0	0	0	0	0	0	0	0	0	0	0	0	SS03	SS02	SS01	SS00

Address: F0162H, F0163H (SS1) After reset: 0000H R/W

Symbol	15	14	13	12	11	10	9	8	7	6	5	4	3	2	1	0
SS1	0	0	0	0	0	0	0	0	0	0	0	0	SS13	SS12	SS11	SS10

SSmn	Operation start trigger of channel n
0	No trigger operation
1	Sets the SEmn bit to 1 and enters the communication wait status[Note].

Note If set the SSmn = 1 to during a communication operation, will wait status to stop the communication. At this time, holding status value of control register and shift register, SCKmn and SOmn pins, and FEFmn, PEFmn, OVFmn flags.

Cautions 1. Be sure to clear bits 15 to 4 of the SS0 register, bits 15 to 2 of the SS1 register for 64-pin products and bits 15 to 4 of the SS1 register for 80-pin products to "0".

2. For the UART reception, set the RXEmn bit of SCRmn register to 1, and then be sure to set SSmn to 1 after 4 or more f_{MCK} clocks have elapsed.

Remarks 1. m: Unit number (m = 0, 1), n: Channel number (n = 0 to 3)

2. When the SSm register is read, 0000H is always read.

14.3.9 Serial channel stop register m (STm)

The STm register is a trigger register that is used to enable stopping communication/count by each channel.

When 1 is written a bit of this register (STmn), the corresponding bit (SEmn) of serial channel enable status register m (SEm) is cleared to 0 (operation is stopped). Because the STmn bit is a trigger bit, it is cleared immediately when SEmn = 0.

The STm register can set written by a 16-bit memory manipulation instruction.

The lower 8 bits of the STm register can be set with a 1-bit or 8-bit memory manipulation instruction with STmL.

Reset signal generation clears the STm register to 0000H.

Figure 14-13. Format of Serial Channel Stop Register m (STm)

Address: F0124H, F0125H (ST0) After reset: 0000H W

Symbol	15	14	13	12	11	10	9	8	7	6	5	4	3	2	1	0
ST0	0	0	0	0	0	0	0	0	0	0	0	0	ST03	ST02	ST01	ST00

Address: F0164H, F0165H (ST1) After reset: 0000H W

Symbol	15	14	13	12	11	10	9	8	7	6	5	4	3	2	1	0
ST1	0	0	0	0	0	0	0	0	0	0	0	0	ST13	ST12	ST11	ST10

STm n	Operation stop trigger of channel n
0	No trigger operation
1	Clears the SEmn bit to 0 and stops the communication operation[Note].

Note Holding status value of the control register and shift register, the SCKmn and SOmn pins, and FEFmn, PEFmn, OVFmn flags.

Caution **Be sure to clear bits 15 to 4 of the ST0 register, bits 15 to 2 of the ST1 register for 64-pin products and bits 15 to 4 of the ST1 register for 80-pin products to “0”.**

Remarks **1.** m: Unit number (m = 0, 1), n: Channel number (n = 0 to 3)

2. When the STm register is read, 0000H is always read.

14.3.10 Serial channel enable status register m (SEm)

The SEm register indicates whether data transmission/reception operation of each channel is enabled or stopped.

When 1 is written a bit of serial channel start register m (SSm), the corresponding bit of this register is set to 1. When 1 is written a bit of serial channel stop register m (STm), the corresponding bit is cleared to 0.

Channel n that is enabled to operate cannot rewrite by software the value of the CKOmn bit (serial clock output of channel n) of serial output register m (SOm) to be described below, and a value reflected by a communication operation is output from the serial clock pin.

Channel n that stops operation can set the value of the CKOmn bit of the SOm register by software and output its value from the serial clock pin. In this way, any waveform, such as that of a start condition/stop condition, can be created by software.

The SEm register can be read by a 16-bit memory manipulation instruction.

The lower 8 bits of the SEm register can be set with a 1-bit or 8-bit memory manipulation instruction with SEmL.

Reset signal generation clears the SEm register to 0000H.

Figure 14-14. Format of Serial Channel Enable Status Register m (SEm)

Address: F0120H, F0121H (SE0) After reset: 0000H R

Symbol	15	14	13	12	11	10	9	8	7	6	5	4	3	2	1	0
SE0	0	0	0	0	0	0	0	0	0	0	0	0	SE03	SE02	SE01	SE00

Address: F0160H, F0161H (SE1) After reset: 0000H R

Symbol	15	14	13	12	11	10	9	8	7	6	5	4	3	2	1	0
SE1	0	0	0	0	0	0	0	0	0	0	0	0	SE13	SE12	SE11	SE10

SEm n	Indication of operation enable/stop status of channel n
0	Operation stops
1	Operation is enabled.

Remark m: Unit number (m = 0, 1), n: Channel number (n = 0 to 3)

14.3.11 Serial output enable register m (SOEm)

The SOEm register is a register that is used to enable or stop output of the serial communication operation of each channel.

Channel n that enables serial output cannot rewrite by software the value of the SOmn bit of serial output register m (SOm) to be described below, and a value reflected by a communication operation is output from the serial data output pin.

For channel n, whose serial output is stopped, the SOmn bit value of the SOm register can be set by software, and that value can be output from the serial data output pin. In this way, any waveform of the start condition and stop condition can be created by software.

The SOEm register can be set by a 16-bit memory manipulation instruction.

The lower 8 bits of the SOEm register can be set with a 1-bit or 8-bit memory manipulation instruction with SOEmL.

Reset signal generation clears the SOEm register to 0000H.

Figure 14-15. Format of Serial Output Enable Register m (SOEm)

Address: F012AH, F012BH (SOE0) After reset: 0000H R/W

Symbol	15	14	13	12	11	10	9	8	7	6	5	4	3	2	1	0
SOE0	0	0	0	0	0	0	0	0	0	0	0	0	0	SOE02	0	SOE00

Address: F016AH, F016BH (SOE1) After reset: 0000H R/W

Symbol	15	14	13	12	11	10	9	8	7	6	5	4	3	2	1	0
SOE1	0	0	0	0	0	0	0	0	0	0	0	0	0	SOE12	0	SOE10

SOEmn	Serial output enable/stop of channel n
0	Stops output by serial communication operation.
1	Enables output by serial communication operation.

Caution Be sure to clear bits 15 to 3 and 1 of the SOE0 register, bits 15 to 1 of the SOE1 register for 64-pin products and bits 15 to 3 and 1 of the SOE1 register for 80-pin products to “0”.

Remark m: Unit number (m = 0, 1), n: Channel number (n = 0, 2)

14.3.12 Serial output register m (SOm)

The SOm register is a buffer register for serial output of each channel.

The value of the SOmn bit of this register is output from the serial data output pin of channel n.

The value of the CKOmn bit of this register is output from the serial clock output pin of channel n.

The SOmn bit of this register can be rewritten by software only when serial output is disabled (SOEmn = 0). When serial output is enabled (SOEmn = 1), rewriting by software is ignored, and the value of the register can be changed only by a serial communication operation.

The CKOmn bit of this register can be rewritten by software only when the channel operation is stopped (SEmn = 0). While channel operation is enabled (SEmn = 1), rewriting by software is ignored, and the value of the CKOmn bit can be changed only by a serial communication operation.

To use the pin for serial interface as a port function pin, set the corresponding CKOmn and SOmn bits to “1”.

The SOm register can be set by a 16-bit memory manipulation instruction.

Reset signal generation clears the SOm register to 0F0FH.

Figure 14-16. Format of Serial Output Register m (SOm)

Address: F0128H, F0129H (SO0) After reset: 0F0FH R/W

Symbol	15	14	13	12	11	10	9	8	7	6	5	4	3	2	1	0
SO0	0	0	0	0	1	CKO 02	1	CKO 00	0	0	0	0	1	SO 02	1	SO 00

Address: F0168H, F0169H (SO1) After reset: 0F0FH R/W

Symbol	15	14	13	12	11	10	9	8	7	6	5	4	3	2	1	0
SO1	0	0	0	0	1	1	1	1	0	0	0	0	1	SO 12	1	SO 10

CKO mn	Serial clock output of channel n
0	Serial clock output value is “0”.
1	Serial clock output value is “1”.

SO mn	Serial data output of channel n
0	Serial data output value is “0”.
1	Serial data output value is “1”.

Caution Be sure to clear bits 15 to 12 and 7 to 4 of the SO0 register to “0”. And be sure to set bits 11, 9, 3 and 1 to “1”.
Be sure to clear bits 15 to 12 and 7 to 4 of the SO1 register to “0”. And be sure to set bits 11 to 8 and 3 to 1 for 64-pin products and bits 11 to 8, 3 and 1 for 80-pin products to “1”.

Remark m: Unit number (m = 0, 1), n: Channel number (n = 0, 2)

14.3.13 Serial output level register m (SOLm)

The SOLm register is a register that is used to set inversion of the data output level of each channel.

This register can be set only in the UART mode. Be sure to set 0 for corresponding bit in the simplified SPI (CSI) mode and simplifies I^2C mode.

Inverting channel n by using this register is reflected on pin output only when serial output is enabled (SOEmn = 1). When serial output is disabled (SOEmn = 0), the value of the SOmn bit is output as is.

Rewriting the SOLm register is prohibited when the register is in operation (when SEmn = 1).

The SOLm register can be set by a 16-bit memory manipulation instruction.

The lower 8 bits of the SOLm register can be set with an 8-bit memory manipulation instruction with SOLmL.

Reset signal generation clears the SOLm register to 0000H.

Figure 14-17. Format of Serial Output Level Register m (SOLm)

Address: F0134H, F0135H (SOL0) After reset: 0000H R/W

Symbol	15	14	13	12	11	10	9	8	7	6	5	4	3	2	1	0
SOL0	0	0	0	0	0	0	0	0	0	0	0	0	0	SOL02	0	SOL00

Address: F0174H, F0175H (SOL1) After reset: 0000H R/W

Symbol	15	14	13	12	11	10	9	8	7	6	5	4	3	2	1	0
SOL1	0	0	0	0	0	0	0	0	0	0	0	0	0	SOL12	0	SOL10

SOLmn	Selects inversion of the level of the transmit data of channel n in UART mode
0	Communication data is output as is.
1	Communication data is inverted and output.

Caution Be sure to clear bits 15 to 3, and 1 of the SOL0 register, bits 15 to 1 of the SOL1 register for 64-pin products, and 15 to 3, and 1 of the SOL1 register for 80-pin products to “0”.

(**Remark** is listed on the next page.)

Figure 14-18 shows examples in which the level of transmit data is reversed during UART transmission.

Figure 14-18. Examples of Reverse Transmit Data

(a) Non-reverse Output (SOLmn = 0)

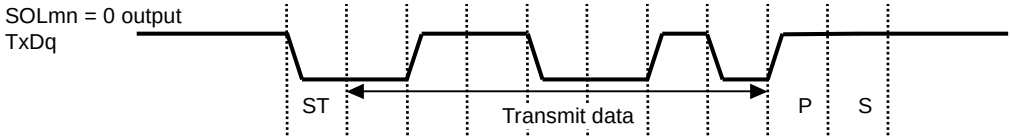

(b) Reverse Output (SOLmn = 1)

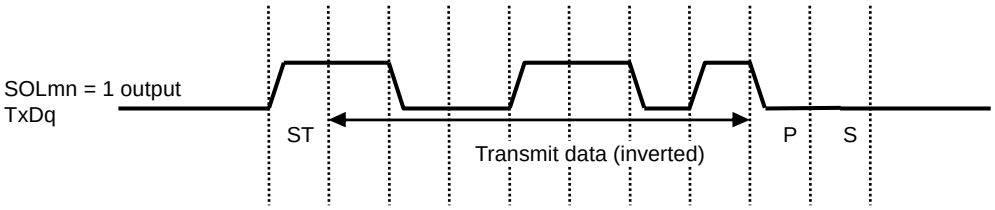

Remark m: Unit number (m = 0, 1), n: Channel number (n = 0, 2)

14.3.14 Serial standby control register m (SSCm)

The SSC0 register is used to control the startup of reception (the SNOOZE mode) while in the STOP mode when receiving CSI00 or UART0 serial data.

The SSC1 register is used to control the startup of reception (the SNOOZE mode) while in the STOP mode when receiving UART2 serial data.

The SSCm register can be set by a 16-bit memory manipulation instruction.

The lower 8 bits of the SSCm register can be set with an 8-bit memory manipulation instruction with SSCmL.

Reset signal generation clears the SSCm register to 0000H.

Caution The maximum transfer rate in the SNOOZE mode is as follows.

- **When using CSI00: 1 Mbps**
- **When using UART0, UART2: 4800 bps**

Figure 14-19. Format of Serial Standby Control Register m (SSCm)

Address: F0138H (SSC0), F0178H (SSC1) After reset: 0000H R/W

Symbol	15	14	13	12	11	10	9	8	7	6	5	4	3	2	1	0
SSCm	0	0	0	0	0	0	0	0	0	0	0	0	0	0	SSECm	SWCm

SSECm	Selection of whether to enable or stop the generation of communication error interrupts in the SNOOZE mode
0	Enable the generation of error interrupts (INTSRE0/INTSRE2).
1	Stop the generation of error interrupts (INTSRE0/INTSRE2).
● The SSECm bit can be set to 1 or 0 only when both the SWCm and EOCmn bits are set to 1 during UART reception in the SNOOZE mode. In other cases, clear the SSECm bit to 0. ● Setting SSECm, SWCm = 1, 0 is prohibited.	

SWCm	Setting of the SNOOZE mode
0	Do not use the SNOOZE mode function.
1	Use the SNOOZE mode function.
● When there is a hardware trigger signal in the STOP mode, the STOP mode is exited, and simplified SPI (CSI) or UART reception is performed without operating the CPU (the SNOOZE mode). ● The SNOOZE mode function can only be specified when the high-speed on-chip oscillator clock is selected for the CPU/peripheral hardware clock (f_{CLK}). If any other clock is selected, specifying this mode is prohibited. ● Even when using SNOOZE mode, be sure to set the SWCm bit to 0 in normal operation mode and change it to 1 just before shifting to STOP mode. Also, be sure to change the SWCm bit to 0 after returning from STOP mode to normal operation mode.	

Figure 14-20. Interrupt in UART Reception Operation in SNOOZE Mode

EOCmn Bit	SSECm Bit	Reception Ended Successfully	Reception Ended in an Error
0	0	INTSRx is generated.	INTSRx is generated.
0	1	INTSRx is generated.	INTSRx is generated.
1	0	INTSRx is generated.	INTSREx is generated.
1	1	INTSRx is generated.	No interrupt is generated.

14.3.15 Input switch control register (ISC)

The ISC1 and ISC0 bits of the ISC register are used to realize a LIN-bus communication operation by UART0 in coordination with an external interrupt and the timer array unit.

When bit 0 is set to 1, the input signal of the serial data input (RxD0) pin is selected as an external interrupt (INTP0) that can be used to detect a wakeup signal.

When bit 1 is set to 1, the input signal of the serial data input (RxD0) pin is selected as a timer input, so that wake up signal can be detected, the low width of the break field, and the pulse width of the sync field can be measured by the timer.

The ISC register can be set by a 1-bit or 8-bit memory manipulation instruction.

Reset signal generation clears the ISC register to 00H.

Figure 14-21. Format of Input Switch Control Register (ISC)

Address: F0073H After reset: 00H R/W

Symbol	7	6	5	4	3	2	1	0
ISC	0	0	0	0	0	0	ISC1	ISC0

ISC1	Switching channel 7 input of timer array unit
0	Uses the input signal of the TI07 pin as a timer input (normal operation).
1	Input signal of the RxD0 pin is used as timer input (detects the wakeup signal and measures the low width of the break field and the pulse width of the sync field).

ISC0	Switching external interrupt (INTP0) input
0	Uses the input signal of the INTP0 pin as an external interrupt (normal operation).
1	Uses the input signal of the RxD0 pin as an external interrupt (wakeup signal detection).

Cautions 1. Be sure to clear bits 7 to 2 to “0”.

2. 16-bit timer KB20 cannot be used together with the LIN-bus functions. When using 16-bit timer KB20, set the ISC register to its initial value (00H).

14.3.16 Noise filter enable register 0 (NFEN0)

The NFEN0 register is used to set whether the noise filter can be used for the input signal from the serial data input pin to each channel.

Disable the noise filter of the pin used for simplified SPI (CSI) or simplified I^2C communication, by clearing the corresponding bit of this register to 0.

Enable the noise filter of the pin used for UART communication, by setting the corresponding bit of this register to 1.

When the noise filter is enabled, after synchronization is performed with the operation clock (f_{MCK}) of the target channel, 2-clock match detection is performed. When the noise filter is disabled, only synchronization is performed with the operation clock (f_{MCK}) of the target channel.

The NFEN0 register can be set by a 1-bit or 8-bit memory manipulation instruction.

Reset signal generation clears the NFEN0 register to 00H.

Figure 14-22. Format of Noise Filter Enable Register 0 (NFEN0)

Address: F0070H After reset: 00H R/W

Symbol	7	6	5	4	3	2	1	0
NFEN0	0	SNFEN30	0	SNFEN20	0	SNFEN10	0	SNFEN00

SNFEN30	Use of noise filter of RxD2 pin (RxD2/SDA20/SI20/P14)
0	Noise filter OFF
1	Noise filter ON
Set SNFEN30 to 1 to use the RxD3 pin. Clear SNFEN30 to 0 to use the other than RxD3 pin.	

SNFEN20	Use of noise filter of RxD2 pin (RxD2/SDA20/SI20/P14)
0	Noise filter OFF
1	Noise filter ON
Set SNFEN20 to 1 to use the RxD2 pin. Clear SNFEN20 to 0 to use the other than RxD2 pin.	

SNFEN10	Use of noise filter of RxD1 pin (RXD1/ANI16/SI10/SDA10/P03)
0	Noise filter OFF
1	Noise filter ON
Set the SNFEN10 bit to 1 to use the RxD1 pin. Clear the SNFEN10 bit to 0 to use the other than RxD1 pin.	

SNFEN00	Use of noise filter of RxD0 pin (RXD0/TOOLRXD/SDA00/SI00/P11)
0	Noise filter OFF
1	Noise filter ON
Set the SNFEN00 bit to 1 to use the RxD0 pin. Clear the SNFEN00 bit to 0 to use the other than RxD0 pin.	

Caution Be sure to clear bits 7 to 5, 3, and 1 for 64-pin products and bits 7, 5, 3, and 1 for 80-pin products to "0".

14.3.17 Registers controlling port functions of serial I/O pins

When using the serial array unit set the registers that control the port functions multiplexed on the target channel (port mode register (PMxx), port register (Pxx), port input mode register (PIMxx), port output mode register (POMxx), port mode control register (PMCxx)).

For details, see **4.3.1 Port mode registers (PMxx)**, **4.3.2 Port registers (Pxx)**, **4.3.4 Port input mode registers (PIMxx)**, **4.3.5 Port output mode registers (POMxx)**, and **4.3.6 Port mode control registers (PMCxx)**.

When using a port pin with a multiplexed serial data or serial clock output function (e.g. P07/SO10/TxD1/SEG50) for serial data or serial clock output, set the corresponding bits in the port mode control register (PMCxx) and port mode register (PMxx) to 0, and the corresponding bit in the port register (Pxx) to 1.

When using the port pin in N-ch open-drain output (V_{DD} tolerance) mode, set the corresponding bit in the port output mode register (POMxx) to 1. When connecting an external device operating on a different potential (1.8 V, 2.5 V or 3 V), see **4.4.4 Handling different potential (1.8 V, 2.5 V, 3 V) by using I/O buffers**.

Example: When P07/SO10/TxD1/SEG50 is to be used for serial data output
Set the PM07 bit of port mode register 0 to 0.
Set the P07 bit of port register 0 to 1.

When using a port pin with a multiplexed serial data or serial clock input function (e.g. P06/SI10/RxD1/SDA10/SEG49) for serial data or serial clock input, set the corresponding bit in the port mode register (PMxx) to 1, and the corresponding bit in the port mode control register (PMCxx) to 0. In this case, the corresponding bit in the port register (Pxx) can be set to 0 or 1.

When the TTL input buffer is selected, set the corresponding bit in the port input mode register (PIMxx) to 1. When connecting an external device operating on a different potential (1.8 V, 2.5 V or 3 V), see **4.4.4 Handling different potential (1.8 V, 2.5 V, 3 V) by using I/O buffers**.

Example: When P06/SI10/RxD1/SDA10/SEG49 is to be used for serial data input
Set the PM06 bit of port mode register 0 to 1.
Set the P06 bit of port register 0 to 0 or 1.

14.4 Operation Stop Mode

Each serial interface of serial array unit has the operation stop mode.
In this mode, serial communication cannot be executed, thus reducing the power consumption.
In addition, the pin for serial interface can be used as port function pins in this mode.

14.4.1 Stopping the operation by units

The stopping of the operation by units is set by using peripheral enable register 0 (PER0).

The PER0 register is used to enable or disable supplying the clock to the peripheral hardware. Clock supply to a hardware macro that is not used is stopped in order to reduce the power consumption and noise.

To stop the operation of serial array unit 0, set bit 2 (SAU0EN) to 0.

To stop the operation of serial array unit 1, set bit 3 (SAU1EN) to 0.

Figure 14-23. Peripheral Enable Register 0 (PER0) Setting When Stopping the Operation by Units

(a) Peripheral enable register 0 (PER0) … Set only the bit of SAUm to be stopped to 0.

	7	6	5	4	3	2	1	0
PER0	RTCWEN ×	0	ADCEN ×	IICA0EN ×	SAU1EN 0/1	SAU0EN 0/1	0	TAU0EN ×

Control of SAUm input clock
0: Stops supply of input clock
1: Supplies input clock

Cautions 1. If SAUmEN = 0, writing to a control register of serial array unit m is ignored, and, even if the register is read, only the default value is read
Note that this does not apply to the following registers.
- **Input switch control register (ISC)**
- **Noise filter enable register 0 (NFEN0)**
- **Port input mode registers 0, 1, 3 (PIM0, PIM1, PIM3)**
- **Port output mode registers 0, 1, 3 (POM0, POM1, POM3)**
- **Port mode registers 0, 1, 3 (PM0, PM1, PM3)**
- **Port registers 0, 1, 3 (P0, P1, P3)**

2. Be sure to clear bits 1, 6 to 0.

Remark ×: Bits not used with serial array units (depending on the settings of other peripheral functions)
0/1: Set to 0 or 1 depending on the usage of the user

14.4.2 Stopping the operation by channels

The stopping of the operation by channels is set using each of the following registers.

Figure 14-24. Each Register Setting When Stopping the Operation by Channels

(a) Serial channel stop register m (STm) … This register is a trigger register that is used to enable stopping communication/count by each channel.

	15	14	13	12	11	10	9	8	7	6	5	4	3	2	1	0
STm	0	0	0	0	0	0	0	0	0	0	0	0	STm3 Note 1 0/1	STm2 Note 1 0/1	STm1 0/1	STm0 0/1

1: Clears the SEmn bit to 0 and stops the communication operation

* Because the STmn bit is a trigger bit, it is cleared immediately when SEmn = 0.

(b) Serial Channel Enable Status Register m (SEm) … This register indicates whether data transmission/reception operation of each channel is enabled or stopped.

	15	14	13	12	11	10	9	8	7	6	5	4	3	2	1	0
SEm	0	0	0	0	0	0	0	0	0	0	0	0	SEm3 Note 1 0/1	SEm2 Note 1 0/1	SEm1 0/1	SEm0 0/1

0: Operation stops

* The SEm register is a read-only status register, whose operation is stopped by using the STm register. With a channel whose operation is stopped, the value of the CKOmn bit of the SOm register can be set by software.

(c) Serial output enable register m (SOEm) … This register is a register that is used to enable or stop output of the serial communication operation of each channel.

	15	14	13	12	11	10	9	8	7	6	5	4	3	2	1	0
SOEm	0	0	0	0	0	0	0	0	0	0	0	0	0	SOEm2 Note 1 0/1	0	SOEm0 0/1

0: Stops output by serial communication operation

* For channel n, whose serial output is stopped, the SOmn bit value of the SOm register can be set by software.

(d) Serial output register m (SOm) …This register is a buffer register for serial output of each channel.

	15	14	13	12	11	10	9	8	7	6	5	4	3	2	1	0
SOm	0	0	0	0	1	CKOm2 Note 2 0/1	1	CKOm0 Note 2 0/1	0	0	0	0	1	SOm2 Note 1 0/1	1	SOm0 0/1

1: Serial clock output value is “1” 1: Serial data output value is “1”

* When using pins corresponding to each channel as port function pins, set the corresponding CKOmn, SOmn bits to “1”.

Notes 1. When Serial array unit 1, 80-pin products only.
2. Serial array unit 0 only.

Remarks 1. m: Unit number (m = 0, 1), n: Channel number (n = 0 to 3)
2. ▢ : Setting disabled (fixed by hardware), 0/1: Set to 0 or 1 depending on the usage of the user

14.5 Operation of Simplified SPI (CSI00, CSI10) Communication

This is a clocked communication function that uses three lines: serial clock (SCK) and serial data (SI and SO) lines.

[Data transmission/reception]

- Data length of 7 or 8 bits
- Phase control of transmit/receive data
- MSB/LSB first selectable

[Clock control]

- Master/slave selection
- Phase control of I/O clock
- Setting of transfer period by prescaler and internal counter of each channel
- Maximum transfer rate[Note]

  During master communication: Max. $f_{CLK}/2$ (CSI00 only)
  Max. $f_{CLK}/4$
  During slave communication: Max. $f_{MCK}/6$

[Interrupt function]

- Transfer end interrupt/buffer empty interrupt

[Error detection flag]

- Overrun error

In addition, CSI00 supports the SNOOZE mode. When SCK input is detected while in the STOP mode, the SNOOZE mode makes data reception that does not require the CPU possible.

Note Use the clocks within a range satisfying the SCK cycle time (t_{KCY}) characteristics. For details, see **CHAPTER 32 ELECTRICAL SPECIFICATIONS (T_A = –40 to +85°C)** and C**HAPTER 33 ELECTRICAL SPECIFICATIONS (T_A = –40 to +105°C)**.

The channels supporting simplified SPI (CSI00, CSI10) are channels 0 and 2 of SAU0.

- 64-pin products

Unit	Channel	Used as Simplified SPI (CSI)	Used as UART	Used as Simplified I^2C
0	0	CSI00	UART0 (supporting LIN-bus)	IIC00
	1	–		–
	2	CSI10	UART1	IIC10
	3	–		–
1	0	–	UART2	–
	1	–		–

- 80-pin products

Unit	Channel	Used as Simplified SPI (CSI)	Used as UART	Used as Simplified I^2C
0	0	CSI00	UART0 (supporting LIN-bus)	IIC00
	1	–		–
	2	CSI10	UART1	IIC10
	3	–		–
1	0	–	UART2	–
	1	–		–
	2	–	UART3	–
	3	–		–

Simplified SPI (CSI00, CSI10) performs the following seven types of communication operations.

- Master transmission (See **14.5.1**.)
- Master reception (See **14.5.2**.)
- Master transmission/reception (See **14.5.3**.)
- Slave transmission (See **14.5.4**.)
- Slave reception (See **14.5.5**.)
- Slave transmission/reception (See **14.5.6**.)
- SNOOZE mode function (See **14.5.7**.)

14.5.1 Master transmission

Master transmission is that the RL78 microcontroller outputs a transfer clock and transmits data to another device.

Simplified SPI	CSI00	CSI10
Target channel	Channel 0 of SAU0	Channel 2 of SAU0
Pins used	SCK00, SO00	SCK10, SO10
Interrupt	INTCSI00	INTCSI10
	Transfer end interrupt (in single-transfer mode) or buffer empty interrupt (in continuous transfer mode) can be selected.	
Error detection flag	None	
Transfer data length	7 or 8 bits	
Transfer rate[Note]	Max. $f_{CLK}/2$ [Hz] (CSI00 only), $f_{CLK}/4$ [Hz] Min. $f_{CLK}/(2 \times 2^{15} \times 128)$ [Hz] f_{CLK}: System clock frequency	
Data phase	Selectable by the DAPmn bit of the SCRmn register ● DAPmn = 0: Data output starts from the start of the operation of the serial clock. ● DAPmn = 1: Data output starts half a clock before the start of the serial clock operation.	
Clock phase	Selectable by the CKPmn bit of the SCRmn register ● CKPmn = 0: Non-reverse (data output at the falling edge and data input at the rising edge of SCK) ● CKPmn = 1: Reverse (data output at the rising edge and data input at the falling edge of SCK)	
Data direction	MSB or LSB first	

Note Use this operation within a range that satisfies the conditions above and the peripheral functions characteristics in the electrical specifications (see **CHAPTER 32 ELECTRICAL SPECIFICATIONS (T_A = –40 to +85°C)** and **CHAPTER 33 ELECTRICAL SPECIFICATIONS (T_A = –40 to +105°C)**).

Remark m: Unit number (m = 0), n: Channel number (n = 0, 2), mn = 00, 02

(1) Register setting

Figure 14-25. Example of Contents of Registers for Master Transmission of Simplified SPI (CSI00, CSI10) (1/2)

(a) Serial mode register mn (SMRmn)

	15	14	13	12	11	10	9	8	7	6	5	4	3	2	1	0
SMRmn	CKSmn 0/1	CCSmn 0	0	0	0	0	0	STSmn 0	0	SISmn0 0	1	0	0	MDmn2 0	MDmn1 0	MDmn0 0/1

Operation clock (f_{MCK}) of channel n
0: Prescaler output clock CKm0 set by the SPSm register
1: Prescaler output clock CKm1 set by the SPSm register

Interrupt source of channel n
0: Transfer end interrupt
1: Buffer empty interrupt

(b) Serial communication operation setting register mn (SCRmn)

	15	14	13	12	11	10	9	8	7	6	5	4	3	2	1	0
SCRmn	TXEmn 1	RXEmn 0	DAPmn 0/1	CKPmn 0/1	0	EOCmn 0	PTCmn1 0	PTCmn0 0	DIRmn 0/1	0	SLCmn1 0	SLCmn0 0	0	1	DLSmn1 1Note	DLSmn0 0/1

Selection of the data and clock phase (For details about the setting, see **14.3 Registers Controlling Serial Array Unit**.)

Selection of data transfer sequence
0: Inputs/outputs data with MSB first
1: Inputs/outputs data with LSB first.

Setting of data length
0: 7-bit data length
1: 8-bit data length

(c) Serial data register mn (SDRmn) (lower 8 bits: SIOp)

	15	14	13	12	11	10	9	8	7	6	5	4	3	2	1	0
SDRmn	Baud rate setting (Operation clock (f_{MCK}) division setting)							0	Transmit data (Transmit data setting)							

SIOp

(d) Serial output register m (SOm) … Sets only the bits of the target channel.

	15	14	13	12	11	10	9	8	7	6	5	4	3	2	1	0
SOm	0	0	0	0	1	CKOm2 0/1	1	CKOm0 0/1	0	0	0	0	1	SOm2 0/1	1	SOm0 0/1

Communication starts when these bits are 1 if the clock phase is non-reversed (the CKPmn bit of the SCRmn = 0).
If the clock phase is reversed (CKPmn = 1), communication starts when these bits are 0.

Note Only provided for the SCR00 register. This bit is fixed to 1 for the other registers.

Remarks 1. m: Unit number (m = 0), n: Channel number (n = 0, 2), p: CSI number (p = 00, 10), mn = 00, 02

2. ☐: Setting is fixed in the Simplified SPI (CSI) master transmission mode,
▒: Setting disabled (set to the initial value)
0/1: Set to 0 or 1 depending on the usage of the user

Figure 14-25. Example of Contents of Registers for Master Transmission of Simplified SPI (CSI00, CSI10) (2/2)

(e) Serial output enable register m (SOEm) … Sets only the bits of the target channel to 1.

	15	14	13	12	11	10	9	8	7	6	5	4	3	2	1	0
SOEm	0	0	0	0	0	0	0	0	0	0	0	0	0	SOEm2 0/1	0	SOEm0 0/1

(f) Serial channel start register m (SSm) … Sets only the bits of the target channel to 1.

	15	14	13	12	11	10	9	8	7	6	5	4	3	2	1	0
SSm	0	0	0	0	0	0	0	0	0	0	0	0	SSm3 ×	SSm2 0/1	SSm1 ×	SSm0 0/1

Remarks 1. m: Unit number (m = 0), n: Channel number (n = 0, 2), p: CSI number (p = 00, 10), mn = 00, 02

2. ▒: Setting disabled (set to the initial value)

×: Bit that cannot be used in this mode (set to the initial value when not used in any mode)

0/1: Set to 0 or 1 depending on the usage of the user

(2) Operation procedure

Figure 14-26. Initial Setting Procedure for Master Transmission

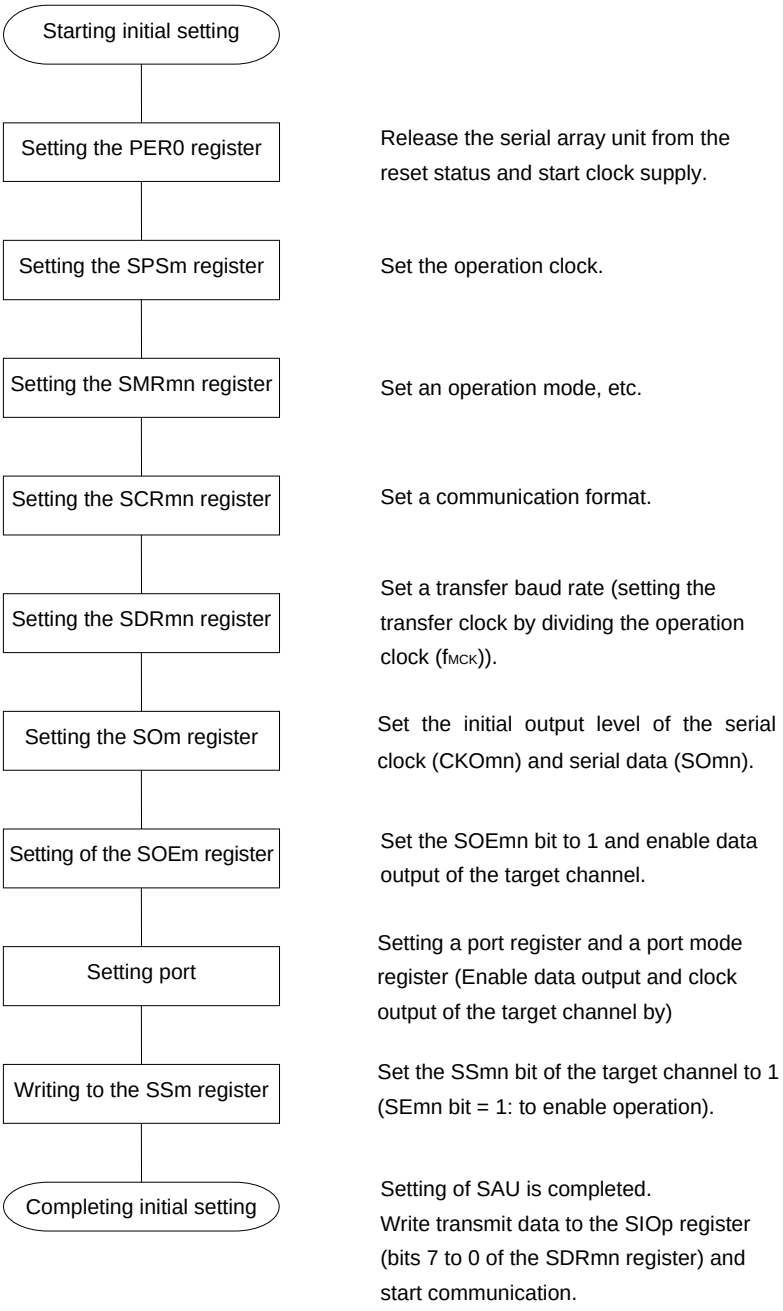

Figure 14-27. Procedure for Stopping Master Transmission

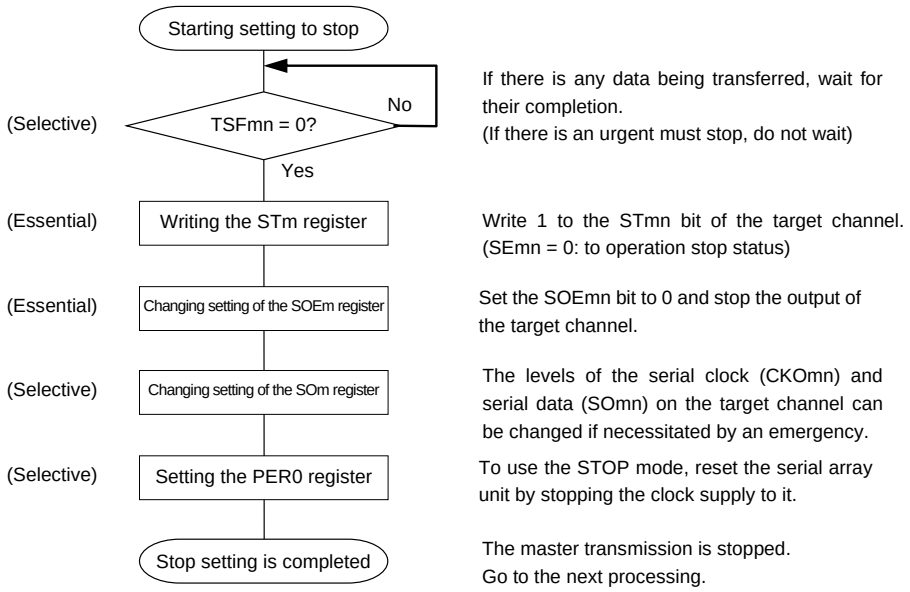

Figure 14-28. Procedure for Resuming Master Transmission

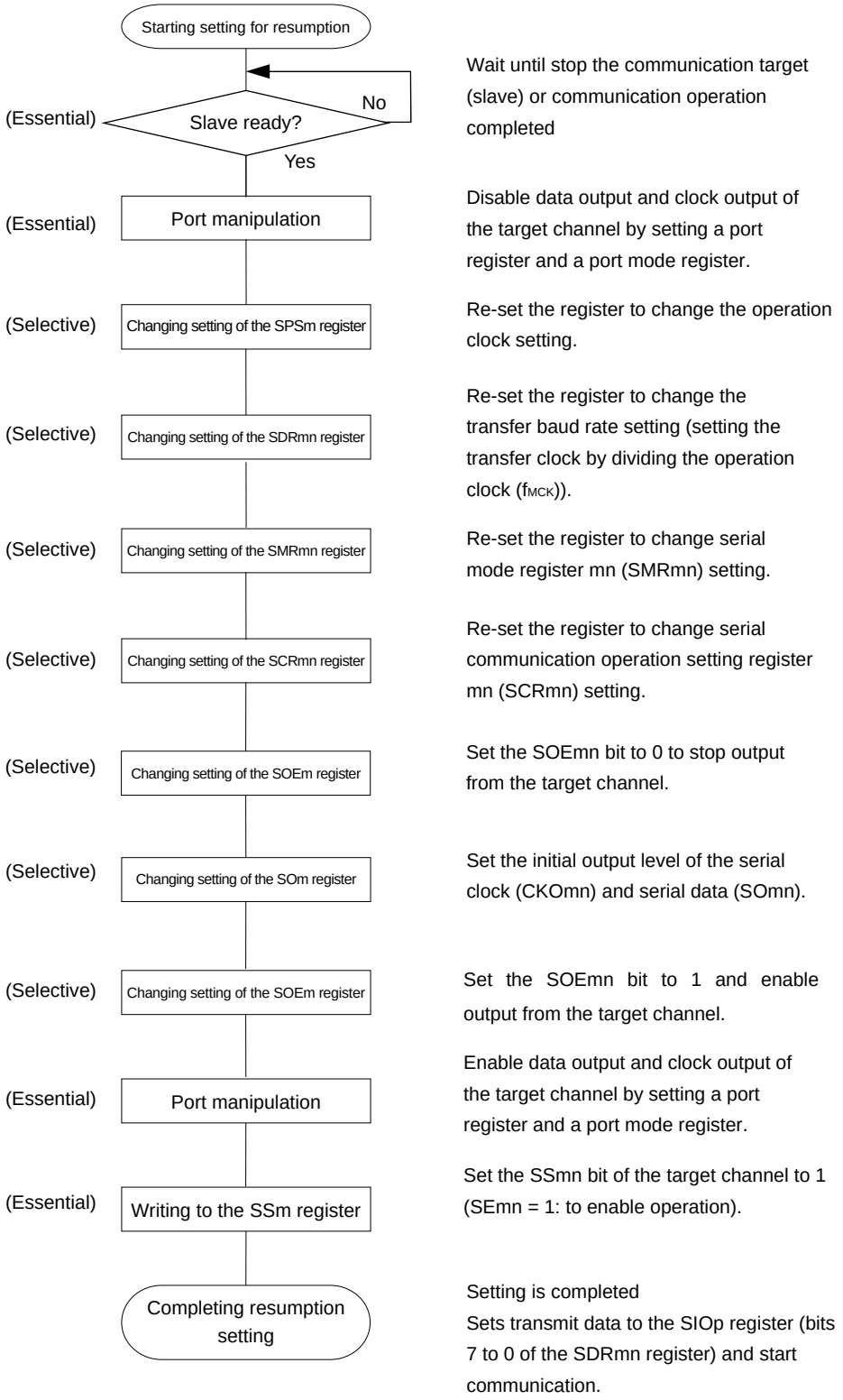

Remark If PER0 is rewritten while stopping the master transmission and the clock supply is stopped, wait until the transmission target (slave) stops or transmission finishes, and then perform initialization instead of restarting the transmission.

(3) Processing flow (in single-transmission mode)

Figure 14-29. Timing Chart of Master Transmission (in Single-Transmission Mode)
(Type 1: DAPmn = 0, CKPmn = 0)

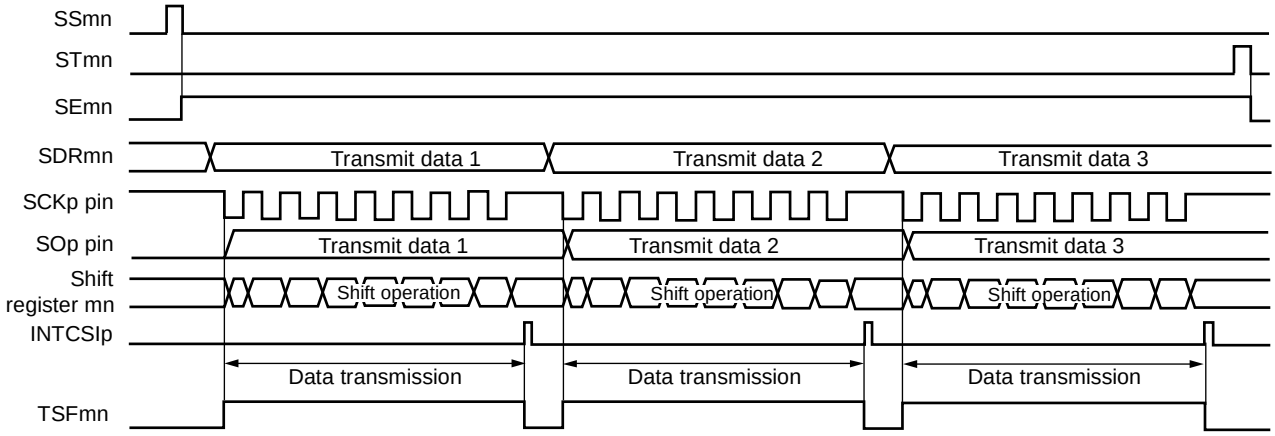

Remark m: Unit number (m = 0), n: Channel number (n = 0, 2), p: CSI number (p = 00, 10), mn = 00, 02

Figure 14-30. Flowchart of Master Transmission (in Single-Transmission Mode)

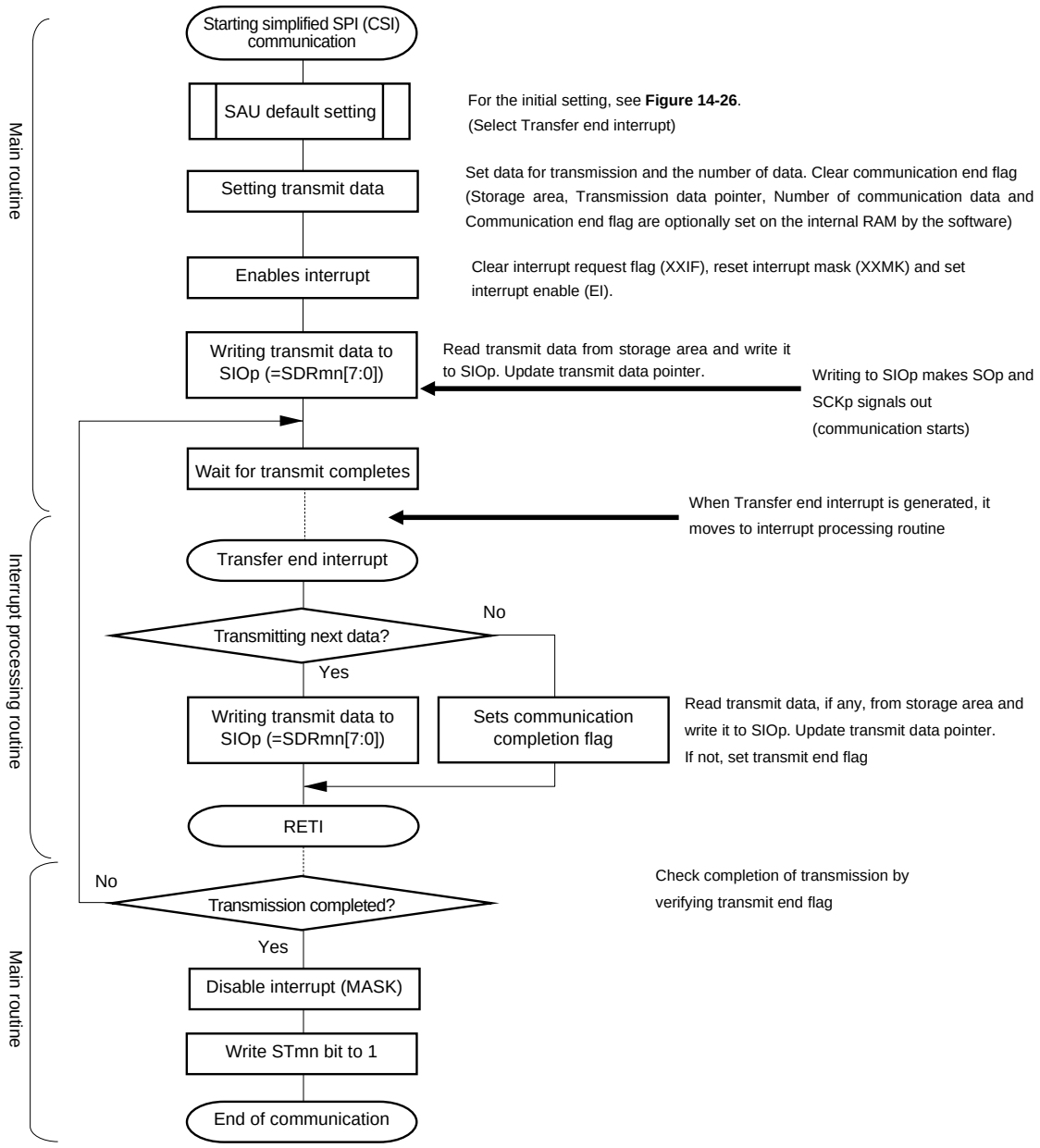

(4) Processing flow (in continuous transmission mode)

Figure 14-31. Timing Chart of Master Transmission (in Continuous Transmission Mode)
(Type 1: DAPmn = 0, CKPmn = 0)

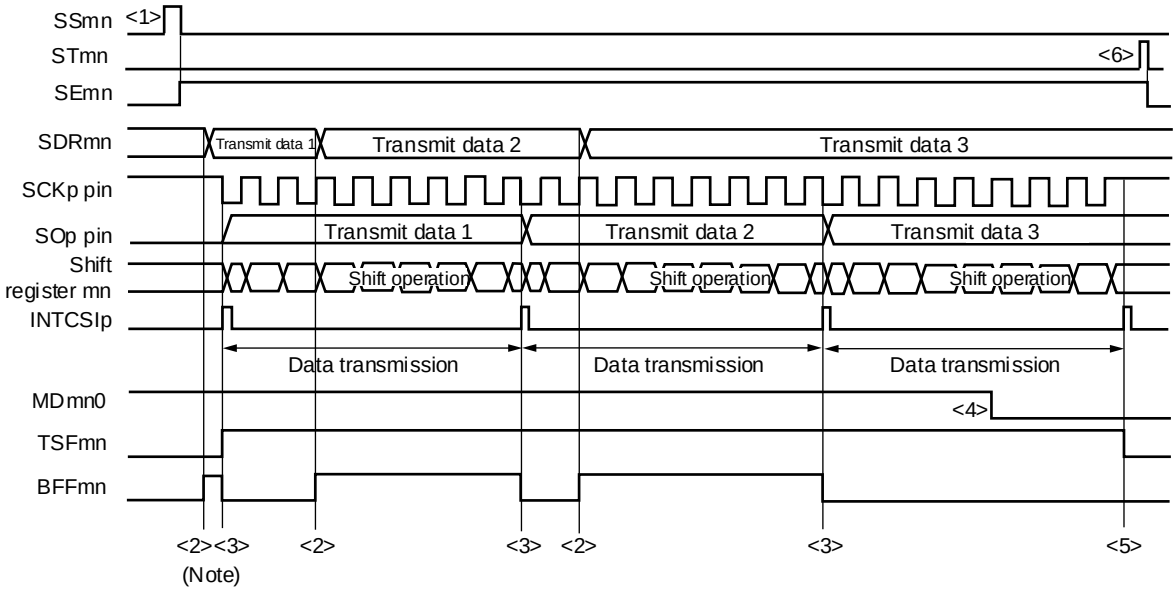

Note If transmit data is written to the SDRmn register while the BFFmn bit of serial status register mn (SSRmn) is 1 (valid data is stored in serial data register mn (SDRmn)), the transmit data is overwritten.

Caution **The MDmn0 bit of serial mode register mn (SMRmn) can be rewritten even during operation. However, rewrite it before transfer of the last bit is started, so that it will be rewritten before the transfer end interrupt of the last transmit data.**

Remark m: Unit number (m = 0), n: Channel number (n = 0, 2), p: CSI number (p = 00, 10), mn = 00, 02

Figure 14-32. Flowchart of Master Transmission (in Continuous Transmission Mode)

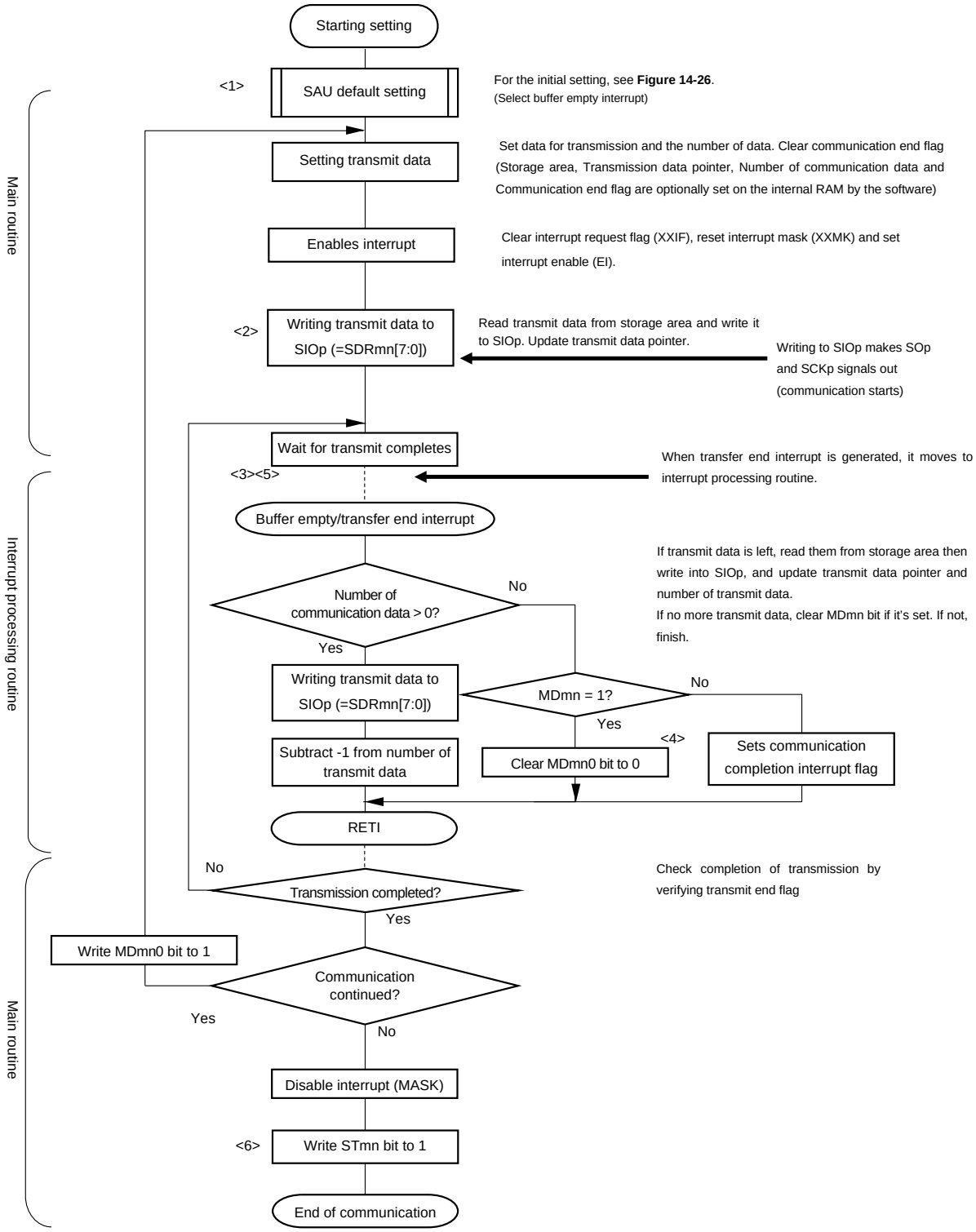

Remark <1> to <6> in the figure correspond to <1> to <6> in **Figure 14-31 Timing Chart of Master Transmission (in Continuous Transmission Mode)**.

14.5.2 Master reception

Master reception is that the RL78 microcontroller outputs a transfer clock and receives data from other device.

Simplified SPI	CSI00	CSI10
Target channel	Channel 0 of SAU0	Channel 2 of SAU0
Pins used	SCK00, SI00	SCK10, SI10
Interrupt	INTCSI00	INTCSI10
	Transfer end interrupt (in single-transfer mode) or buffer empty interrupt (in continuous transfer mode) can be selected.	
Error detection flag	Overrun error detection flag (OVFmn) only	
Transfer data length	7 or 8 bits	
Transfer rate[Note]	Max. $f_{CLK}/2$ [Hz] (CSI00 only), $f_{CLK}/4$ [Hz] Min. $f_{CLK}/(2 \times 2^{15} \times 128)$ [Hz] f_{CLK}: System clock frequency	
Data phase	Selectable by the DAPmn bit of the SCRmn register ● DAPmn = 0: Data input starts from the start of the operation of the serial clock. ● DAPmn = 1: Data input starts half a clock before the start of the serial clock operation.	
Clock phase	Selectable by the CKPmn bit of the SCRmn register ● CKPmn = 0: Non-reverse ● CKPmn = 1: Reverse	
Data direction	MSB or LSB first	

Note Use this operation within a range that satisfies the conditions above and the peripheral functions characteristics in the electrical specifications (see **CHAPTER 32 ELECTRICAL SPECIFICATIONS (T_A = –40 to +85°C)** and **CHAPTER 33 ELECTRICAL SPECIFICATIONS (T_A = –40 to +105°C)**).

Remark m: Unit number (m = 0), n: Channel number (n = 0, 2), mn = 00, 02

(1) Register setting

Figure 14-33. Example of Contents of Registers for Master Reception of Simplified SPI (CSI00, CSI10) (1/2)

(a) Serial mode register mn (SMRmn)

	15	14	13	12	11	10	9	8	7	6	5	4	3	2	1	0
SMRmn	CKSmn 0/1	CCSmn 0	0	0	0	0	0	STSmn 0	0	SISmn0 0	1	0	0	MDmn2 0	MDmn1 0	MDmn0 0/1

Operation clock (f_{MCK}) of channel n
0: Prescaler output clock CKm0 set by the SPSm register
1: Prescaler output clock CKm1 set by the SPSm register

Interrupt source of channel n
0: Transfer end interrupt
1: Buffer empty interrupt

(b) Serial communication operation setting register mn (SCRmn)

	15	14	13	12	11	10	9	8	7	6	5	4	3	2	1	0
SCRmn	TXEmn 0	RXEmn 1	DAPmn 0/1	CKPmn 0/1	0	EOCmn 0	PTCmn1 0	PTCmn0 0	DIRmn 0/1	0	SLCmn1 0	SLCmn0 0	0	1	DLSmn1 1Note	DLSmn0 0/1

Selection of the data and clock phase (For details about the setting, see **14.3 Registers Controlling Serial Array Unit**.)

Selection of data transfer sequence
0: Inputs/outputs data with MSB first
1: Inputs/outputs data with LSB first.

Setting of data length
0: 7-bit data length
1: 8-bit data length

(c) Serial data register mn (SDRmn) (lower 8 bits: SIOp)

	15	14	13	12	11	10	9	8	7	6	5	4	3	2	1	0
SDRmn	Baud rate setting (Operation clock (f_{MCK}) division setting)							0	Receive data (Write FFH as dummy data.)							

SIOp

(d) Serial output register m (SOm) … Sets only the bits of the target channel.

	15	14	13	12	11	10	9	8	7	6	5	4	3	2	1	0
SOm	0	0	0	0	1	CKOm2 0/1	1	CKOm0 0/1	0	0	0	0	1	SOm2 ×	1	SOm0 ×

Communication starts when these bits are 1 if the clock phase is non-reversed (the CKPmn bit of the SCRmn = 0). If the clock phase is reversed (CKPmn = 1), communication starts when these bits are 0.

Note Only provided for the SCR00 register . This bit is fixed to 1 for the other registers.

Remarks 1. m: Unit number (m = 0), n: Channel number (n = 0, 2), p: CSI number (p = 00, 10), mn = 00, 02

2. ☐: Setting is fixed in the Simplified SPI (CSI) master reception mode,

▒: Setting disabled (set to the initial value)

×: Bit that cannot be used in this mode (set to the initial value when not used in any mode)

0/1: Set to 0 or 1 depending on the usage of the user

Figure 14-33. Example of Contents of Registers for Master Reception of Simplified SPI (CSI00, CSI10) (2/2)

(e) Serial output enable register m (SOEm) …The register that not used in this mode.

	15	14	13	12	11	10	9	8	7	6	5	4	3	2	1	0
SOEm	0	0	0	0	0	0	0	0	0	0	0	0	0	SOEm2 ×	0	SOEm0 ×

(f) Serial channel start register m (SSm) … Sets only the bits of the target channel to 1.

	15	14	13	12	11	10	9	8	7	6	5	4	3	2	1	0
SSm	0	0	0	0	0	0	0	0	0	0	0	0	SSm3 ×	SSm2 0/1	SSm1 ×	SSm0 0/1

Remarks 1. m: Unit number (m = 0), n: Channel number (n = 0, 2), p: CSI number (p = 00, 10)

2. ▒ : Setting disabled (set to the initial value)

×: Bit that cannot be used in this mode (set to the initial value when not used in any mode)

0/1: Set to 0 or 1 depending on the usage of the user

(2) Operation procedure

Figure 14-34. Initial Setting Procedure for Master Reception

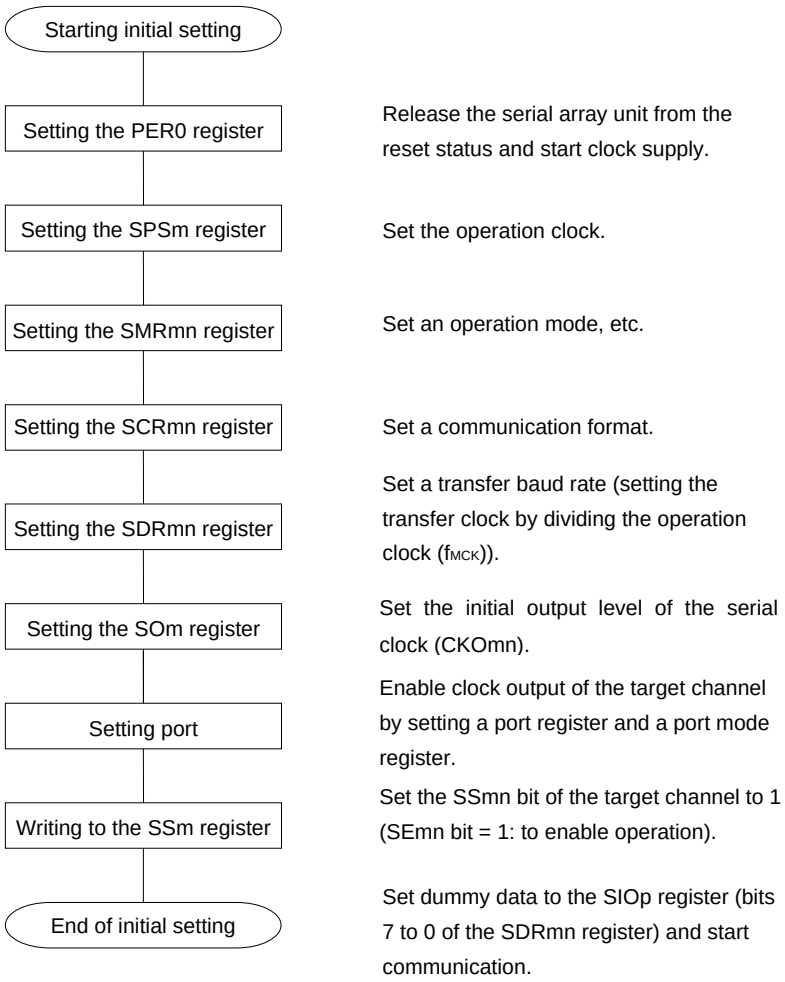

Figure 14-35. Procedure for Stopping Master Reception

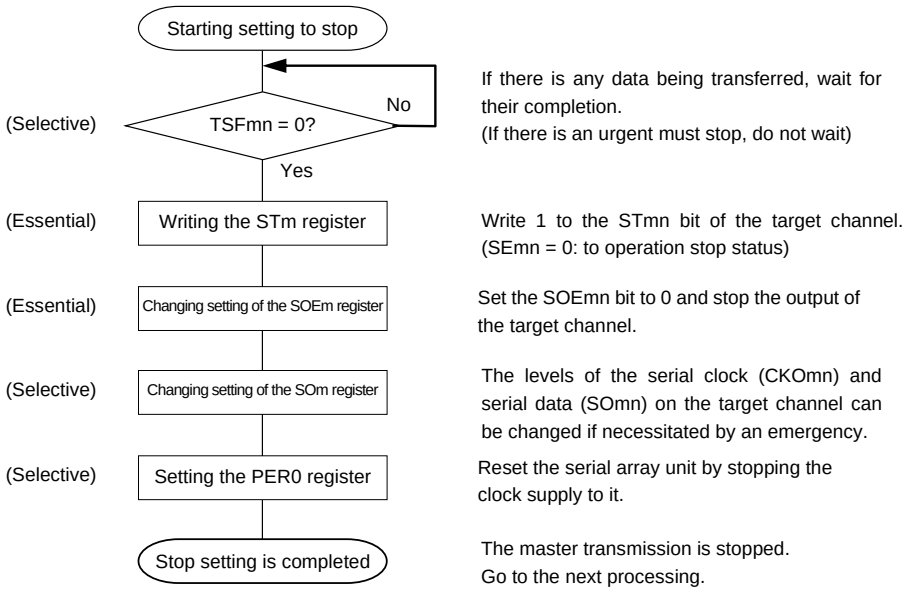

Figure 14-36. Procedure for Resuming Master Reception

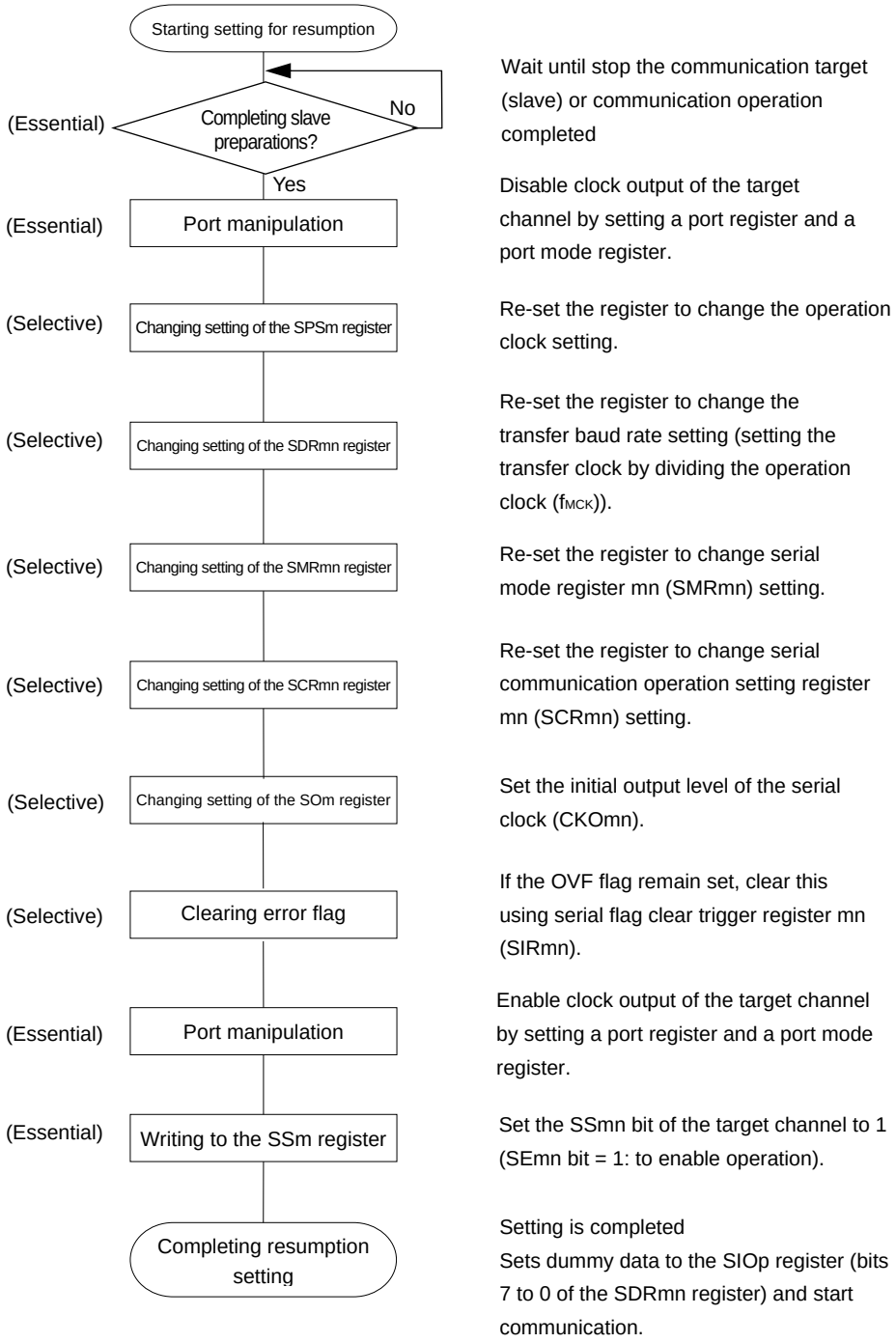

Remark If PER0 is rewritten while stopping the master transmission and the clock supply is stopped, wait until the transmission target (slave) stops or transmission finishes, and then perform initialization instead of restarting the transmission.

(3) Processing flow (in single-reception mode)

Figure 14-37. Timing Chart of Master Reception (in Single-Reception Mode)
(Type 1: DAPmn = 0, CKPmn = 0)

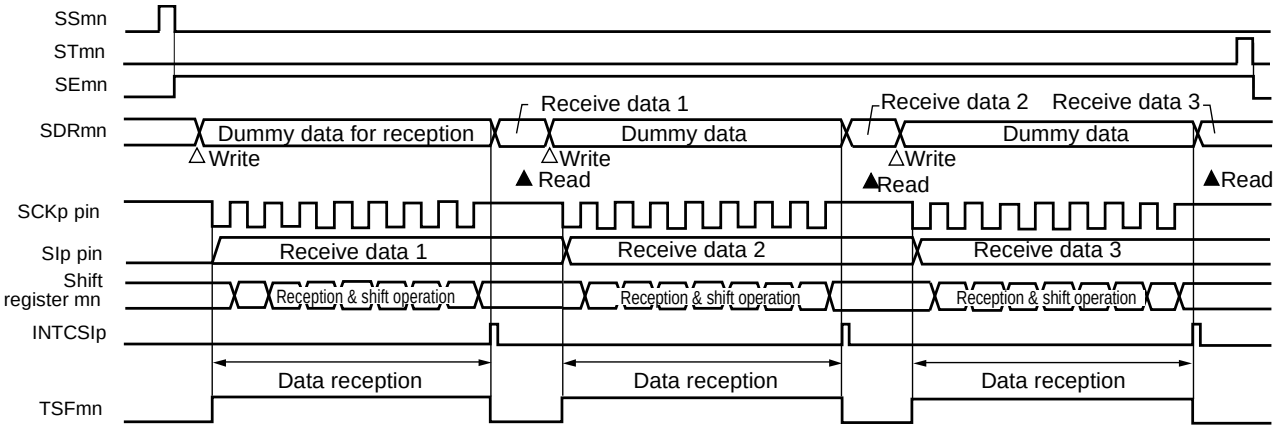

Remark m: Unit number (m = 0), n: Channel number (n = 0, 2), p: CSI number (p = 00, 10), mn = 00, 02

Figure 14-38. Flowchart of Master Reception (in Single-Reception Mode)

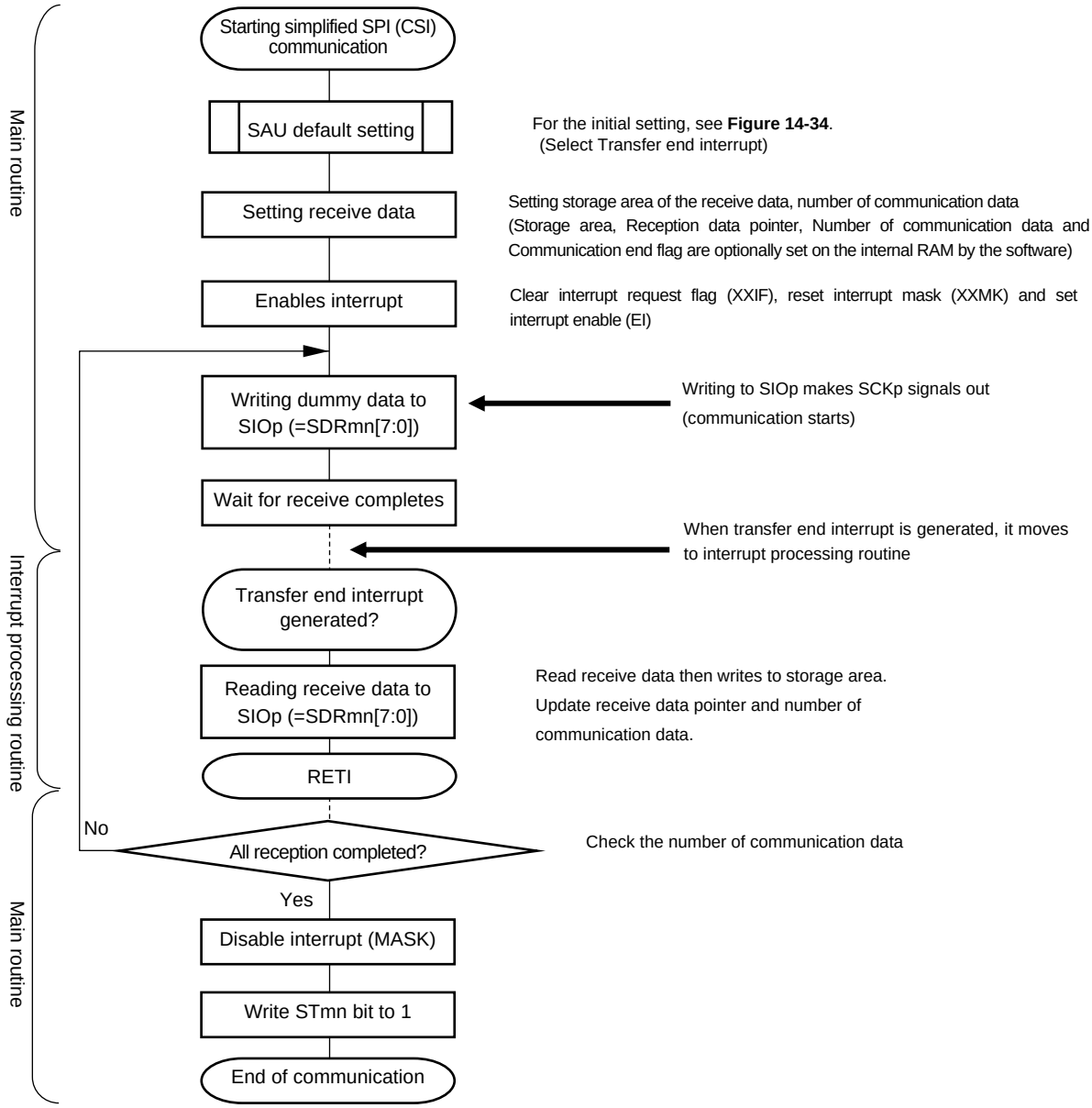

(4) Processing flow (in continuous reception mode)

Figure 14-39. Timing Chart of Master Reception (in Continuous Reception Mode) (Type 1: DAPmn = 0, CKPmn = 0)

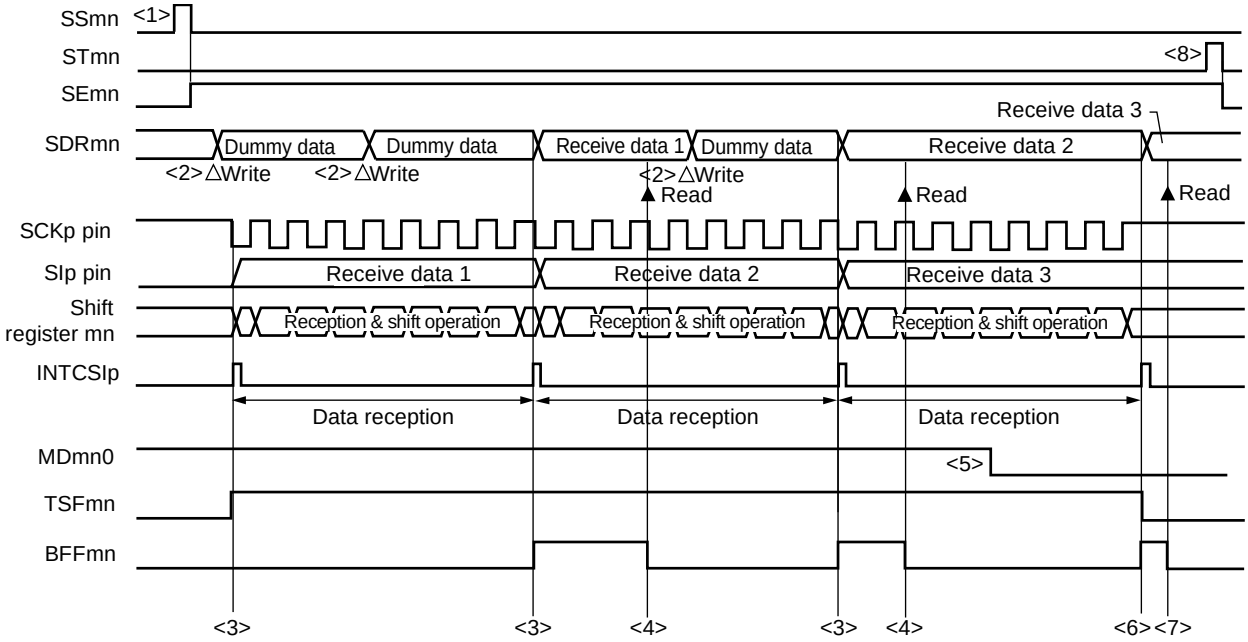

Caution The MDmn0 bit can be rewritten even during operation.
However, rewrite it before receive of the last bit is started, so that it has been rewritten before the transfer end interrupt of the last receive data.

Remarks 1. <1> to <8> in the figure correspond to <1> to <8> in **Figure 14-40 Flowchart of Master Reception (in Continuous Reception Mode)**.

2. m: Unit number (m = 0), n: Channel number (n = 0, 2), p: CSI number (p = 00, 10), mn = 00, 02

Figure 14-40. Flowchart of Master Reception (in Continuous Reception Mode)

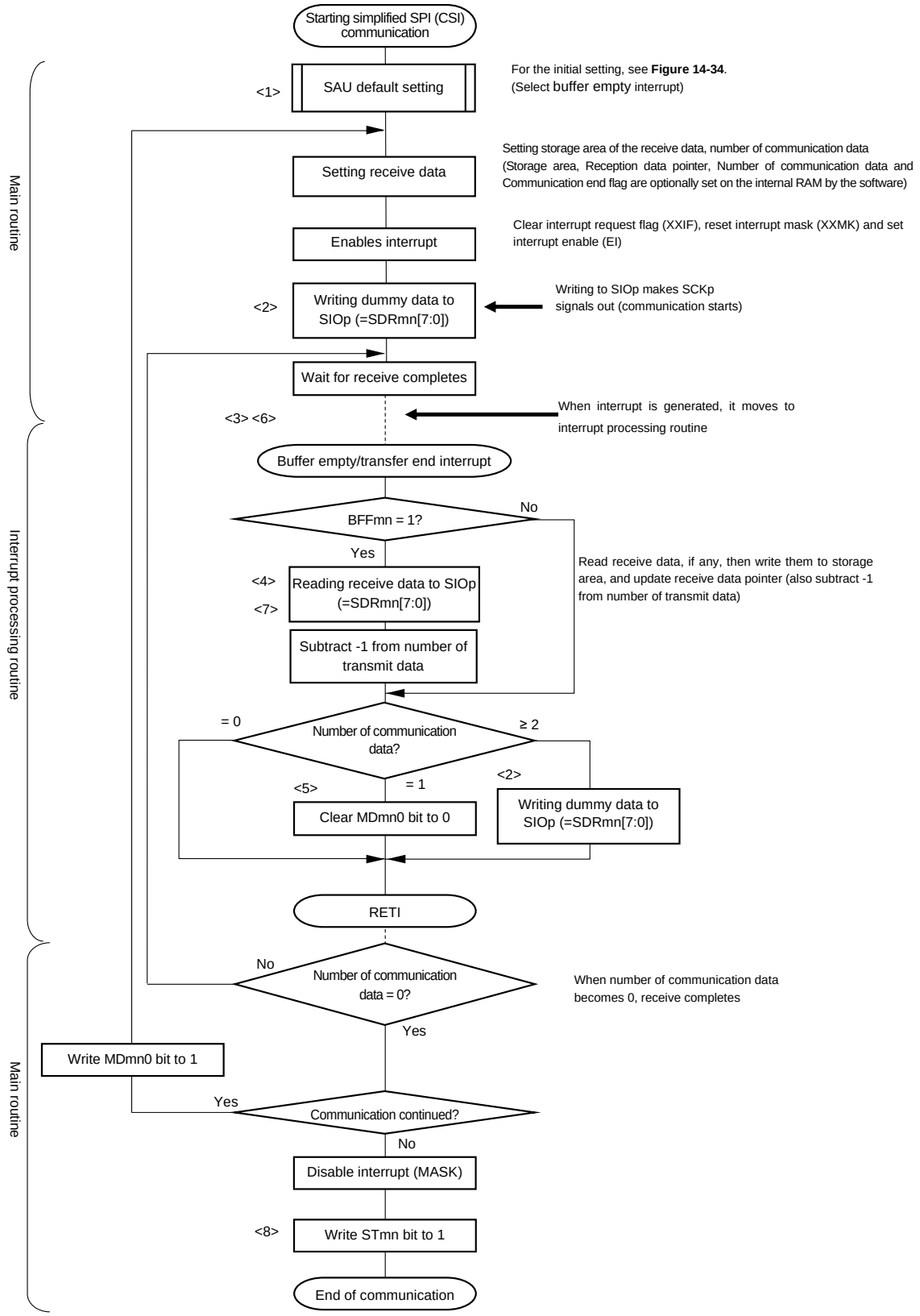

Remark <1> to <8> in the figure correspond to <1> to <8> in **Figure 14-39 Timing Chart of Master Reception (in Continuous Reception Mode)**.

14.5.3 Master transmission/reception

Master transmission/reception is that the RL78 microcontroller outputs a transfer clock and transmits/receives data to/from other device.

Simplified SPI	CSI00	CSI10
Target channel	Channel 0 of SAU0	Channel 2 of SAU0
Pins used	SCK00, SI00, SO00	SCK10, SI10, SO10
Interrupt	INTCSI00	INTCSI10
	Transfer end interrupt (in single-transfer mode) or buffer empty interrupt (in continuous transfer mode) can be selected.	
Error detection flag	Overrun error detection flag (OVFmn) only	
Transfer data length	7 or 8 bits	
Transfer rate[Note]	Max. $f_{CLK}/2$ [Hz] (CSI00 only), $f_{CLK}/4$ [Hz] Min. $f_{CLK}/(2 \times 2^{15} \times 128)$ [Hz] f_{CLK}: System clock frequency	
Data phase	Selectable by the DAPmn bit of the SCRmn register ● DAPmn = 0: Data I/O starts at the start of the operation of the serial clock. ● DAPmn = 1: Data I/O starts half a clock before the start of the serial clock operation.	
Clock phase	Selectable by the CKPmn bit of the SCRmn register ● CKPmn = 0: Non-reverse ● CKPmn = 1: Reverse	
Data direction	MSB or LSB first	

Note Use this operation within a range that satisfies the conditions above and the peripheral functions characteristics in the electrical specifications (see **CHAPTER 32 ELECTRICAL SPECIFICATIONS (T_A = –40 to +85°C)** and **CHAPTER 33 ELECTRICAL SPECIFICATIONS (T_A = –40 to +105°C)**).

Remark m: Unit number (m = 0), n: Channel number (n = 0, 2), mn = 00, 02

(1) Register setting

Figure 14-41. Example of Contents of Registers for Master Transmission/Reception of Simplified SPI (CSI00, CSI10) (1/2)

(a) Serial mode register mn (SMRmn)

	15	14	13	12	11	10	9	8	7	6	5	4	3	2	1	0
SMRmn	CKSmn 0/1	CCSmn 0	0	0	0	0	0	STSmn 0	0	SISmn0 0	1	0	0	MDmn2 0	MDmn1 0	MDmn0 0/1

Operation clock (f_{MCK}) of channel n
0: Prescaler output clock CKm0 set by the SPSm register
1: Prescaler output clock CKm1 set by the SPSm register

Interrupt source of channel n
0: Transfer end interrupt
1: Buffer empty interrupt

(b) Serial communication operation setting register mn (SCRmn)

	15	14	13	12	11	10	9	8	7	6	5	4	3	2	1	0
SCRmn	TXEmn 1	RXEmn 1	DAPmn 0/1	CKPmn 0/1	0	EOCmn 0	PTCmn1 0	PTCmn0 0	DIRmn 0/1	0	SLCmn1 0	SLCmn0 0	0	1	DLSmn1 1Note	DLSmn0 0/1

Selection of the data and clock phase (For details about the setting, see **14.3 Registers Controlling Serial Array Unit**.)

Selection of data transfer sequence
0: Inputs/outputs data with MSB first
1: Inputs/outputs data with LSB first.

Setting of data length
0: 7-bit data length
1: 8-bit data length

(c) Serial data register mn (SDRmn) (lower 8 bits: SIOp)

	15	14	13	12	11	10	9	8	7	6	5	4	3	2	1	0
SDRmn	Baud rate setting (Operation clock (f_{MCK}) division setting)							0	Transmit data setting/receive data register							

SIOp

(d) Serial output register m (SOm) … Sets only the bits of the target channel.

	15	14	13	12	11	10	9	8	7	6	5	4	3	2	1	0
SOm	0	0	0	0	1	CKOm2 0/1	1	CKOm0 0/1	0	0	0	0	1	SOm2 0/1	1	SOm0 0/1

Communication starts when these bits are 1 if the clock phase is non-reverse (the CKPmn bit of the SCRmn = 0). If the clock phase is reversed (CKPmn = 1), communication starts when these bits are 0.

Note Only provided for the SCR00 register. This bit is fixed to 1 for the other registers.

Remarks 1. m: Unit number (m = 0), n: Channel number (n = 0, 2), p: CSI number (p = 00, 10), mn = 00, 02

2. ☐: Setting is fixed in the simplified SPI (CSI) master transmission/reception mode

▒: Setting disabled (set to the initial value)

×: Bit that cannot be used in this mode (set to the initial value when not used in any mode)

0/1: Set to 0 or 1 depending on the usage of the user

Figure 14-41. Example of Contents of Registers for Master Transmission/Reception of Simplified SPI (CSI00, CSI10) (2/2)

(e) Serial output enable register m (SOEm) … Sets only the bits of the target channel to 1.

	15	14	13	12	11	10	9	8	7	6	5	4	3	2	1	0
SOEm	0	0	0	0	0	0	0	0	0	0	0	0	0	SOEm2 0/1	0	SOEm0 0/1

(f) Serial channel start register m (SSm) … Sets only the bits of the target channel to 1.

	15	14	13	12	11	10	9	8	7	6	5	4	3	2	1	0
SSm	0	0	0	0	0	0	0	0	0	0	0	0	SSm3 ×	SSm2 0/1	SSm1 ×	SSm0 0/1

Remarks 1. m: Unit number (m = 0), n: Channel number (n = 0, 2), p: CSI number (p = 00, 10), mn = 00, 02

2. ▒ : Setting disabled (set to the initial value)

×: Bit that cannot be used in this mode (set to the initial value when not used in any mode)

0/1: Set to 0 or 1 depending on the usage of the user

(2) Operation procedure

Figure 14-42. Initial Setting Procedure for Master Transmission/Reception

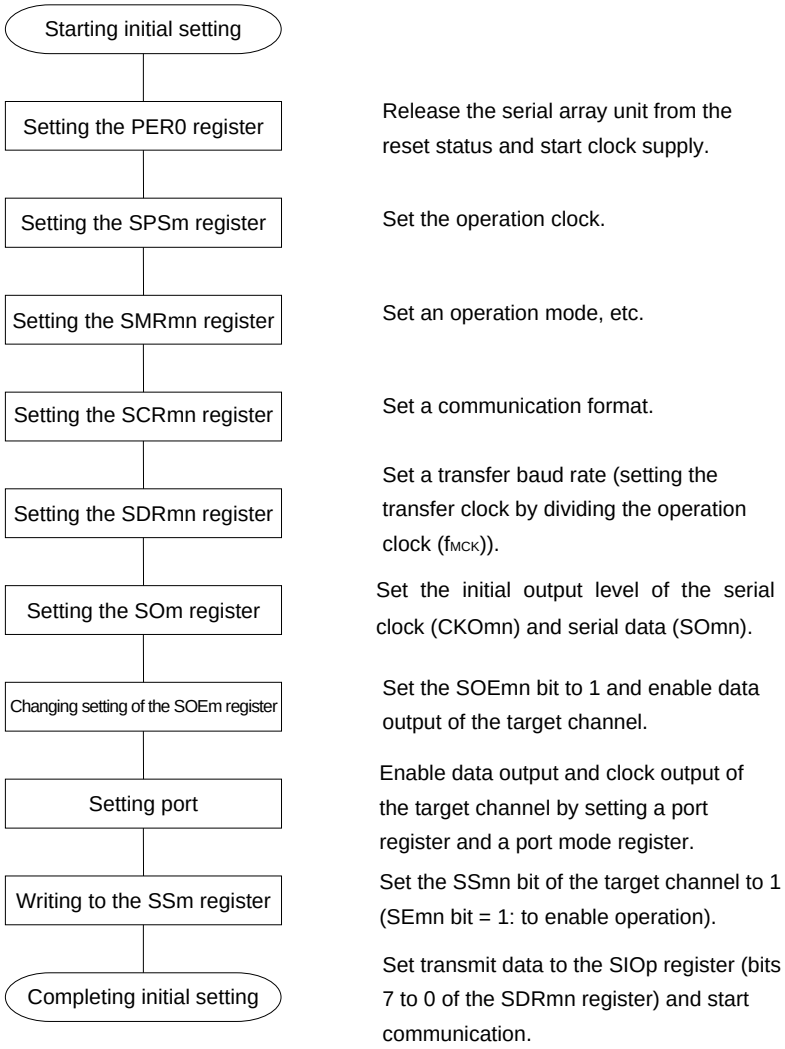

Figure 14-43. Procedure for Stopping Master Transmission/Reception

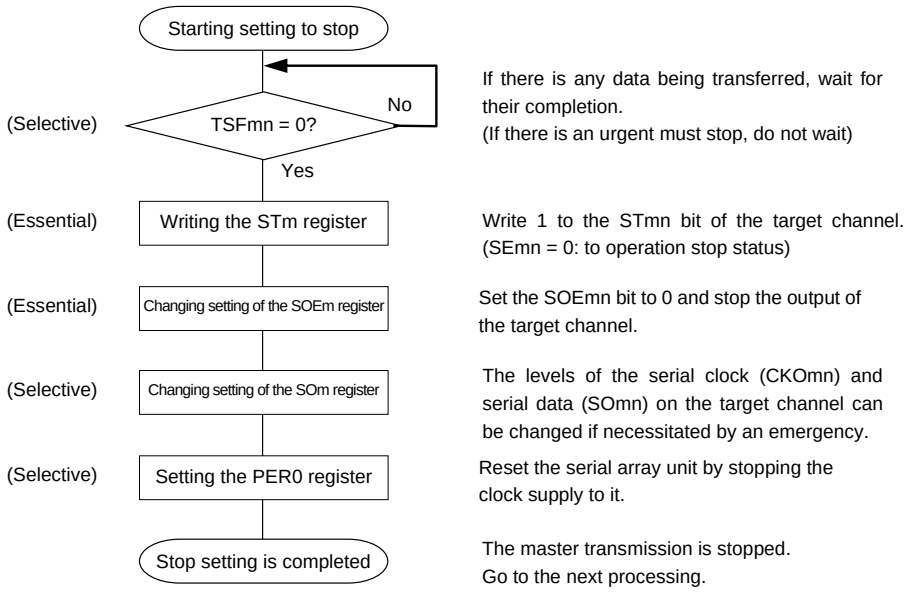

Figure 14-44. Procedure for Resuming Master Transmission/Reception

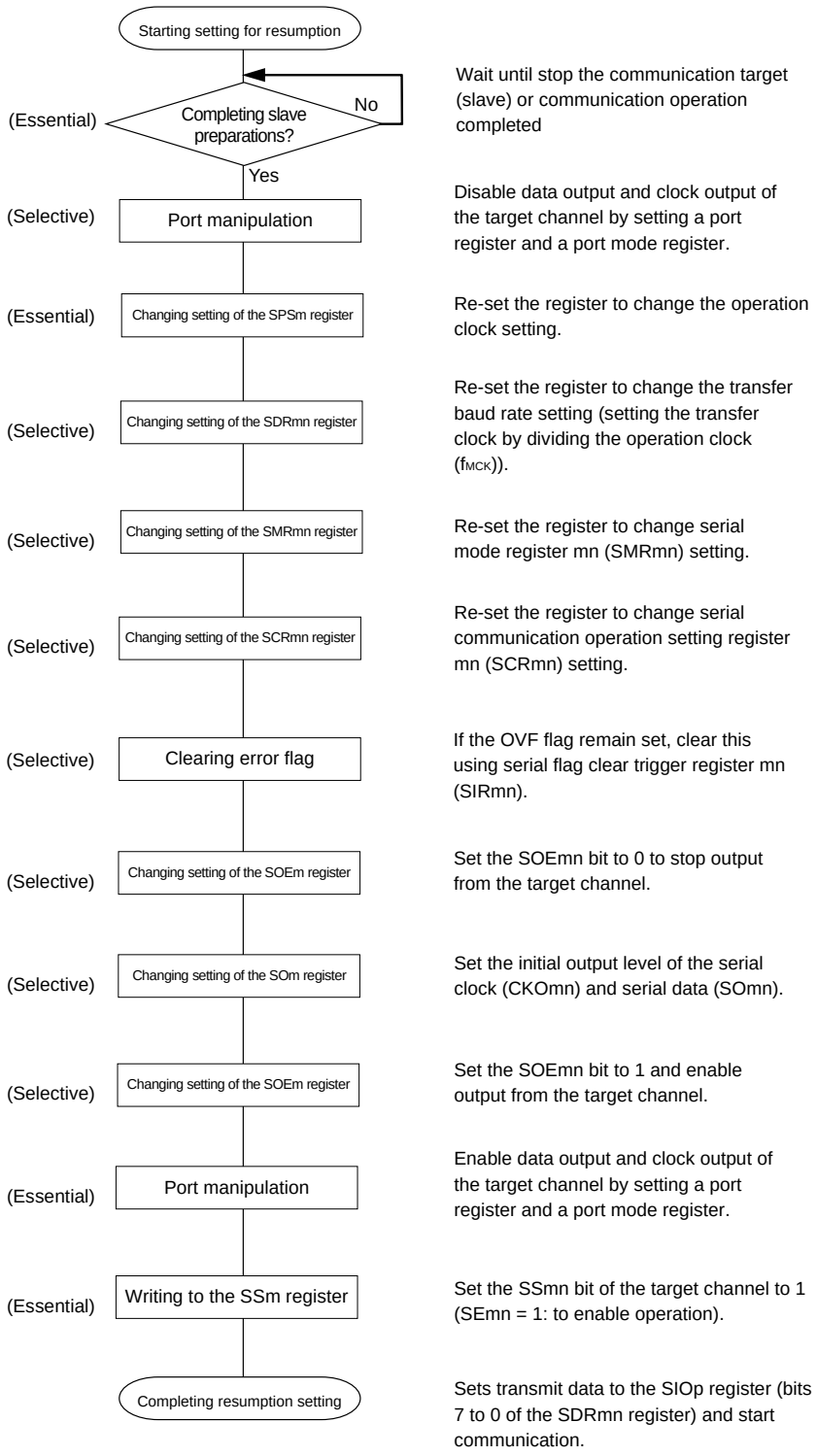

(3) Processing flow (in single-transmission/reception mode)

Figure 14-45. Timing Chart of Master Transmission/Reception (in Single-Transmission/Reception Mode) (Type 1: DAPmn = 0, CKPmn = 0)

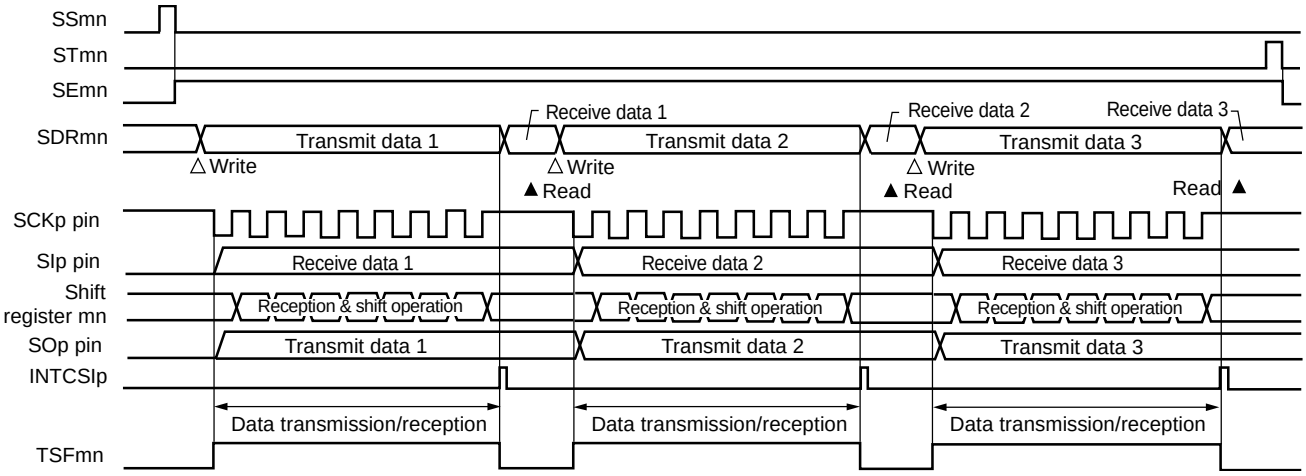

Remark m: Unit number (m = 0), n: Channel number (n = 0, 2), p: CSI number (p = 00, 10), mn = 00, 02

Figure 14-46. Flowchart of Master Transmission/Reception (in Single- Transmission/Reception Mode)

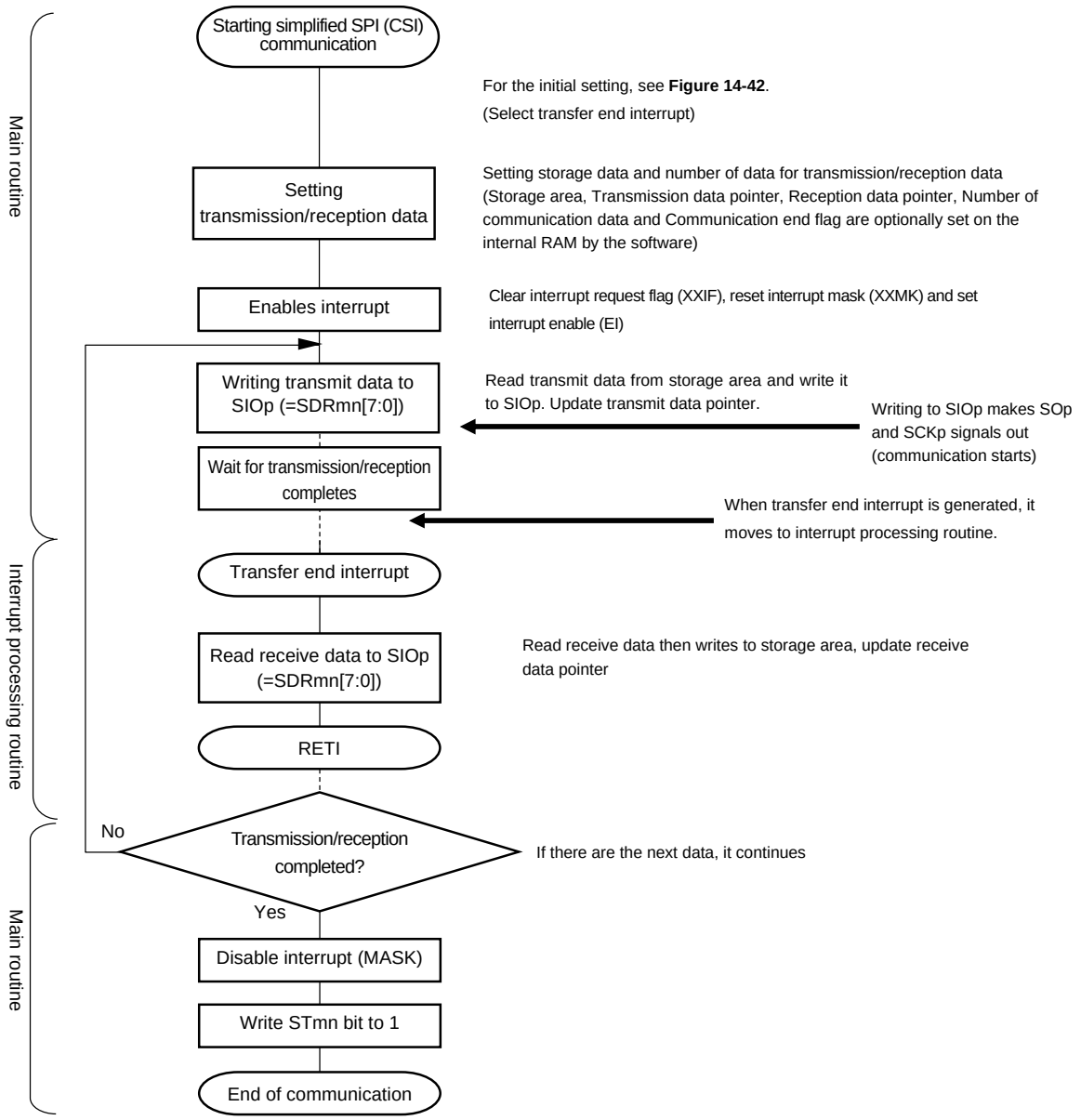

(4) Processing flow (in continuous transmission/reception mode)

Figure 14-47. Timing Chart of Master Transmission/Reception (in Continuous Transmission/Reception Mode) (Type 1: DAPmn = 0, CKPmn = 0)

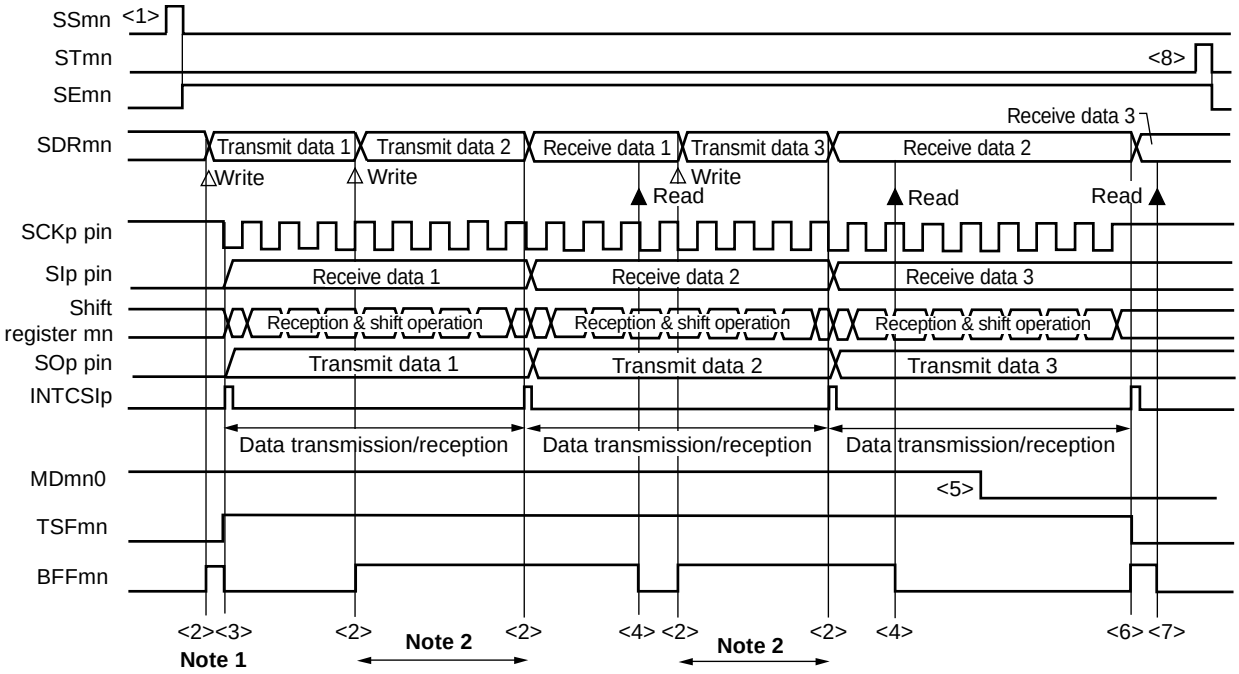

Notes 1. If transmit data is written to the SDRmn register while the BFFmn bit of serial status register mn (SSRmn) is 1 (valid data is stored in serial data register mn (SDRmn)), the transmit data is overwritten.

2. The transmit data can be read by reading the SDRmn register during this period. At this time, the transfer operation is not affected.

Caution The MDmn0 bit of serial mode register mn (SMRmn) can be rewritten even during operation. However, rewrite it before transfer of the last bit is started, so that it has been rewritten before the transfer end interrupt of the last transmit data.

Remarks 1. <1> to <8> in the figure correspond to <1> to <8> in **Figure 14-48 Flowchart of Master Transmission/Reception (in Continuous Transmission/Reception Mode)**.

2. m: Unit number (m = 0), n: Channel number (n = 0, 2), p: CSI number (p = 00, 10), mn = 00, 02

Figure 14-48. Flowchart of Master Transmission/Reception (in Continuous Transmission/Reception Mode)

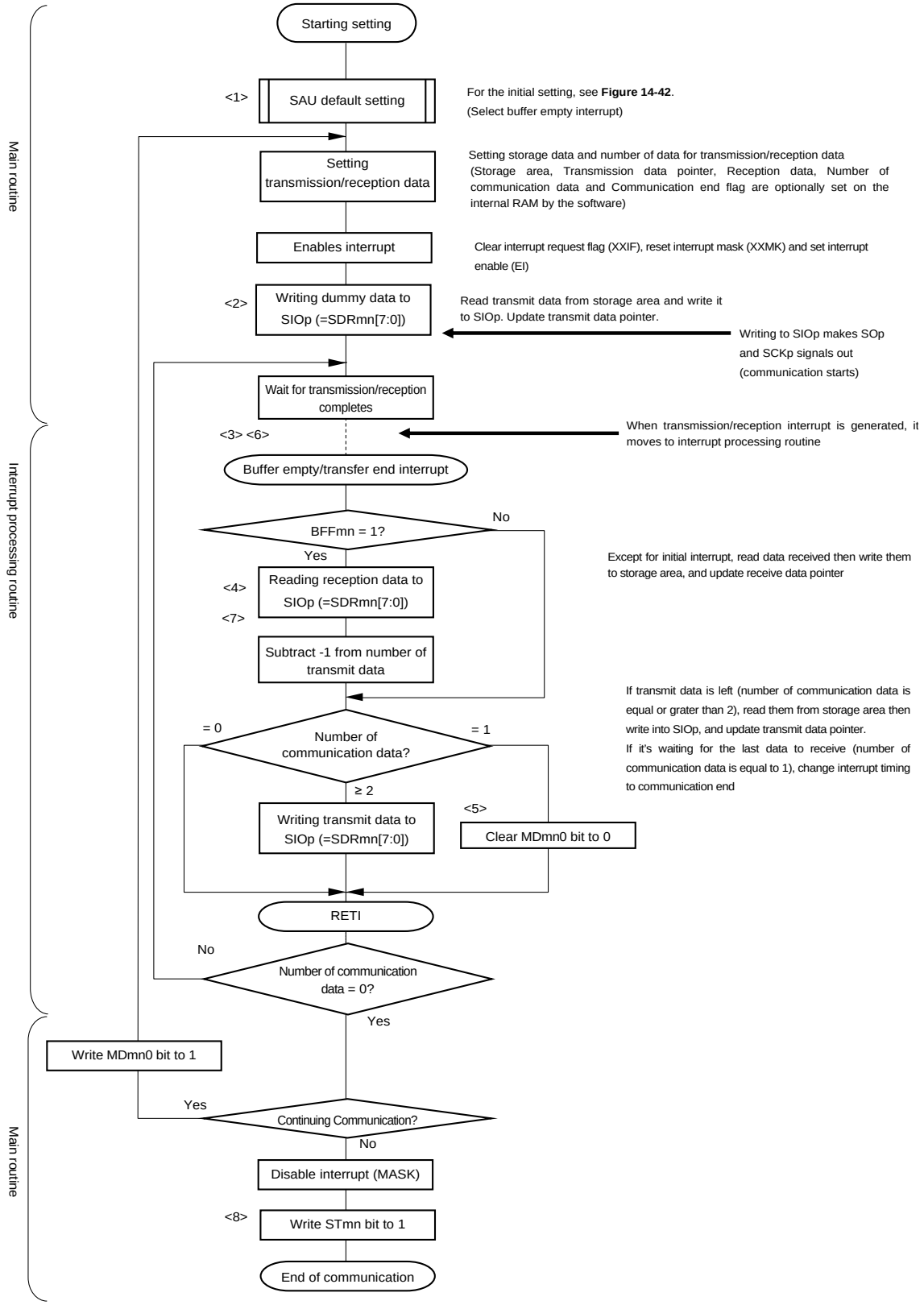

Remark <1> to <8> in the figure correspond to <1> to <8> in **Figure 14-47 Timing Chart of Master Transmission/Reception (in Continuous Transmission/Reception Mode)**.

14.5.4 Slave transmission

Slave transmission is that the RL78 microcontroller transmits data to another device in the state of a transfer clock being input from another device.

Simplified SPI	CSI00	CSI10
Target channel	Channel 0 of SAU0	Channel 2 of SAU0
Pins used	SCK00, SO00	SCK10, SO10
Interrupt	INTCSI00	INTCSI10
	Transfer end interrupt (in single-transfer mode) or buffer empty interrupt (in continuous transfer mode) can be selected.	
Error detection flag	Overrun error detection flag (OVFmn) only	
Transfer data length	7 or 8 bits	
Transfer rate	Max. f_{MCK}/6 [Hz][Notes 1, 2].	
Data phase	Selectable by the DAPmn bit of the SCRmn register ● DAPmn = 0: Data output starts from the start of the operation of the serial clock. ● DAPmn = 1: Data output starts half a clock before the start of the serial clock operation.	
Clock phase	Selectable by the CKPmn bit of the SCRmn register ● CKPmn = 0: Non-reverse ● CKPmn = 1: Reverse	
Data direction	MSB or LSB first	

Notes 1. Because the external serial clock input to the SCK00, SCK10 pins is sampled internally and used, the fastest transfer rate is f_{MCK}/6 [Hz].

2. Use this operation within a range that satisfies the conditions above and the peripheral functions characteristics in the electrical specifications (see **CHAPTER 32 ELECTRICAL SPECIFICATIONS (T_A = –40 to +85°C)** and **CHAPTER 33 ELECTRICAL SPECIFICATIONS (T_A = –40 to +105°C)**).

Remarks 1. f_{MCK}: Operation clock frequency of target channel
f_{SCK}: Serial clock frequency

2. m: Unit number (m = 0), n: Channel number (n = 0, 2), mn = 00, 02

(1) Register setting

Figure 14-49. Example of Contents of Registers for Slave Transmission of Simplified SPI (CSI00, CSI10) (1/2)

(a) Serial mode register mn (SMRmn)

	15	14	13	12	11	10	9	8	7	6	5	4	3	2	1	0
SMRmn	CKSmn 0/1	CCSmn 1	0	0	0	0	0	STSmn 0	0	SISmn0 0	1	0	0	MDmn2 0	MDmn1 0	MDmn0 0/1

Operation clock (f_{MCK}) of channel n
0: Prescaler output clock CKm0 set by the SPSm register
1: Prescaler output clock CKm1 set by the SPSm register

Interrupt source of channel n
0: Transfer end interrupt
1: Buffer empty interrupt

(b) Serial communication operation setting register mn (SCRmn)

	15	14	13	12	11	10	9	8	7	6	5	4	3	2	1	0
SCRmn	TXEmn 1	RXEmn 0	DAPmn 0/1	CKPmn 0/1	0	EOCmn 0	PTCmn1 0	PTCmn0 0	DIRmn 0/1	0	SLCmn1 0	SLCmn0 0	0	1	DLSmn1 1Note	DLSmn0 0/1

Selection of the data and clock phase (For details about the setting, see **14.3 Registers Controlling Serial Array Unit**.)

Selection of data transfer sequence
0: Inputs/outputs data with MSB first
1: Inputs/outputs data with LSB first.

Setting of data length
0: 7-bit data length
1: 8-bit data length

(c) Serial data register mn (SDRmn) (lower 8 bits: SIOp)

	15	14	13	12	11	10	9	8	7	6	5	4	3	2	1	0
SDRmn	0000000 Baud rate setting							0	Transmit data setting							

SIOp

(d) Serial output register m (SOm) … Sets only the bits of the target channel.

	15	14	13	12	11	10	9	8	7	6	5	4	3	2	1	0
SOm	0	0	0	0	1	CKOm2 ×	1	CKOm0 ×	0	0	0	0	1	SOm2 0/1	1	SOm0 0/1

Note Only provided for the SCR00 register. This bit is fixed to 1 for the other registers.

Remarks 1. m: Unit number (m = 0), n: Channel number (n = 0, 2), p: CSI number (p = 00, 10), mn = 00, 02

2. ☐: Setting is fixed in the simplified SPI (CSI) slave transmission mode,

▒: Setting disabled (set to the initial value)

×: Bit that cannot be used in this mode (set to the initial value when not used in any mode)

0/1: Set to 0 or 1 depending on the usage of the user

Figure 14-49. Example of Contents of Registers for Slave Transmission of Simplified SPI (CSI00, CSI10) (2/2)

(e) Serial output enable register m (SOEm) … Sets only the bits of the target channel to 1.

	15	14	13	12	11	10	9	8	7	6	5	4	3	2	1	0
SOEm	0	0	0	0	0	0	0	0	0	0	0	0	0	SOEm2 0/1	0	SOEm0 0/1

(f) Serial channel start register m (SSm) … Sets only the bits of the target channel to 1.

	15	14	13	12	11	10	9	8	7	6	5	4	3	2	1	0
SSm	0	0	0	0	0	0	0	0	0	0	0	0	SSm3 ×	SSm2 0/1	SSm1 ×	SSm0 0/1

Remarks 1. m: Unit number (m = 0), n: Channel number (n = 0, 2), p: CSI number (p = 00, 10), mn = 00, 02

2. ▒: Setting disabled (set to the initial value)

×: Bit that cannot be used in this mode (set to the initial value when not used in any mode)

0/1: Set to 0 or 1 depending on the usage of the user

(2) Operation procedure

Figure 14-50. Initial Setting Procedure for Slave Transmission

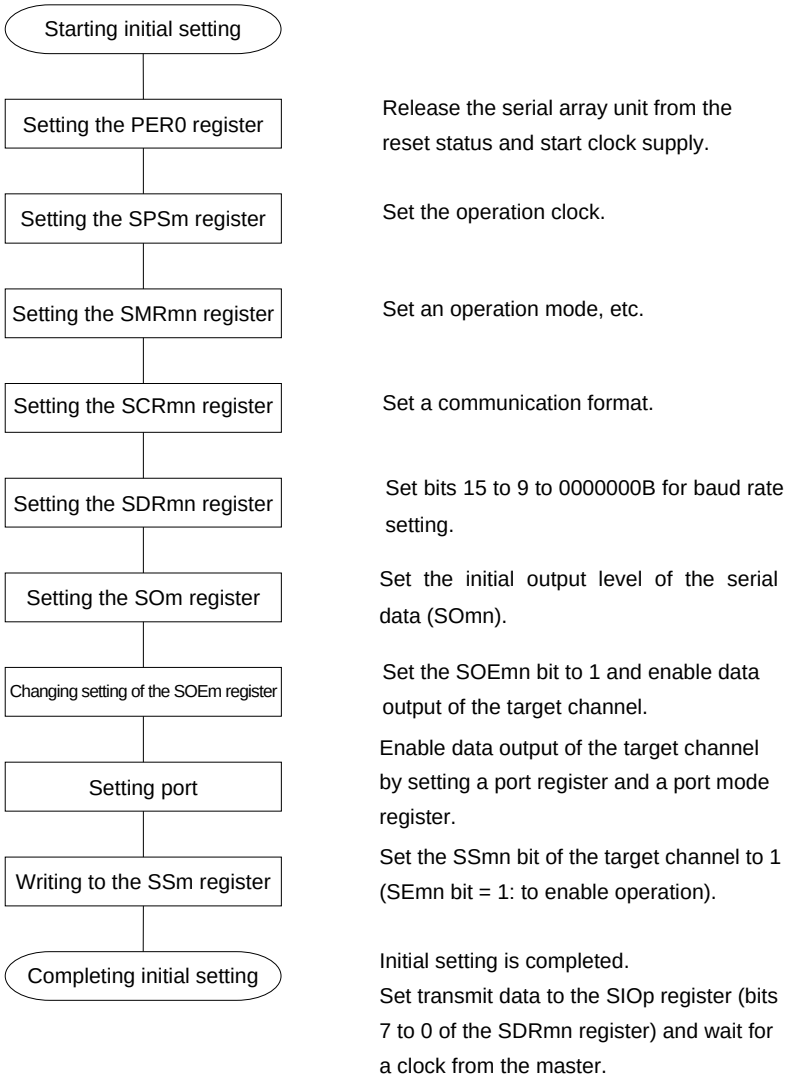

Figure 14-51. Procedure for Stopping Slave Transmission

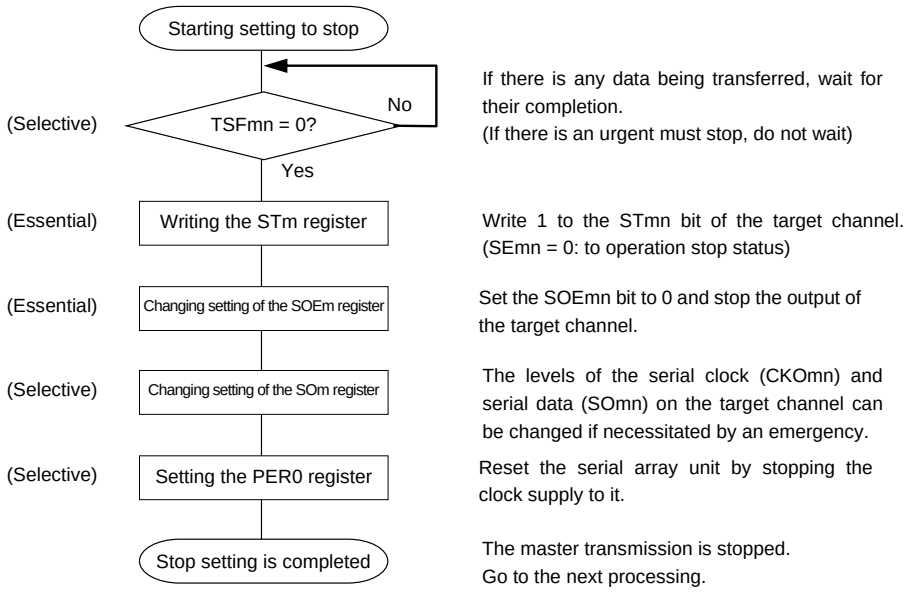

Figure 14-52. Procedure for Resuming Slave Transmission

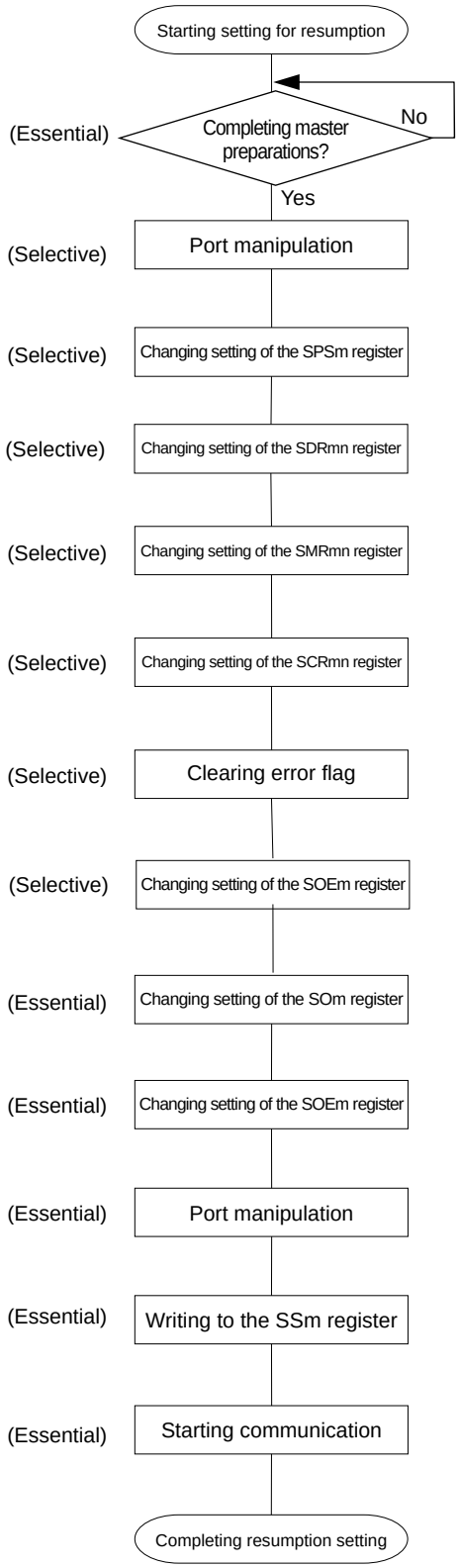

Wait until stop the communication target (master)

Disable data output of the target channel by setting a port register and a port mode register.

Re-set the register to change the operation clock setting.

Re-set the register to change the transfer baud rate setting (setting the transfer clock by dividing the operation clock (f_{MCK})).

Re-set the register to change serial mode register mn (SMRmn) setting.

Re-set the register to change serial communication operation setting register mn (SCRmn) setting.

If the OVF flag remain set, clear this using serial flag clear trigger register mn (SIRmn).

Set the SOEmn bit to 0 to stop output from the target channel.

Set the initial output level of the serial data (SOmn).

Set the SOEmn bit to 1 and enable output from the target channel.

Enable data output of the target channel by setting a port register and a port mode register.

Set the SSmn bit of the target channel to 1 (SEmn = 1: to enable operation).

Sets transmit data to the SIOp register (bits 7 to 0 of the SDRmn register) and wait for a clock from the master.

Remark If PER0 is rewritten while stopping the master transmission and the clock supply is stopped, wait until the transmission target (master) stops or transmission finishes, and then perform initialization instead of restarting the transmission.

(3) Processing flow (in single-transmission mode)

Figure 14-53. Timing Chart of Slave Transmission (in Single-Transmission Mode)
(Type 1: DAPmn = 0, CKPmn = 0)

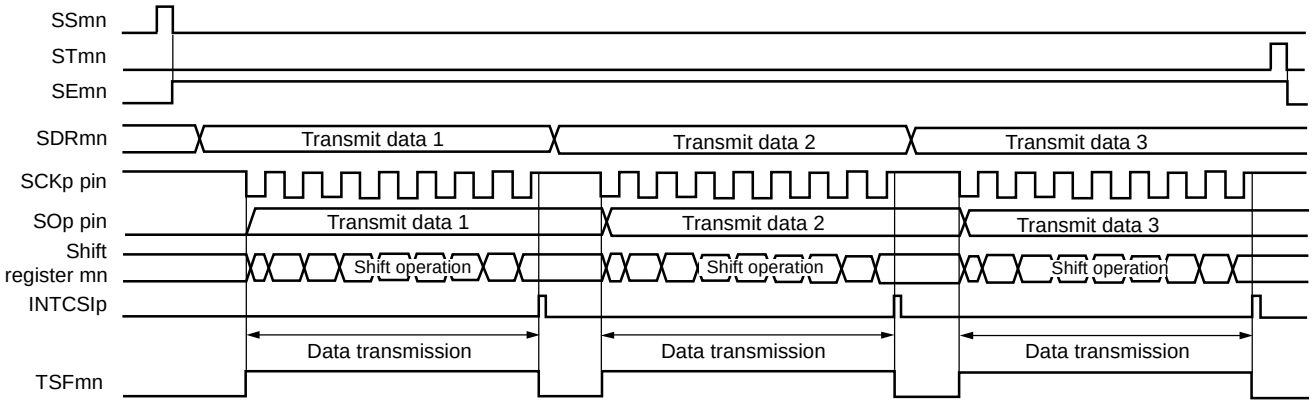

Remark m: Unit number (m = 0), n: Channel number (n = 0, 2), p: CSI number (p = 00, 10), mn = 00, 02

Figure 14-54. Flowchart of Slave Transmission (in Single-Transmission Mode)

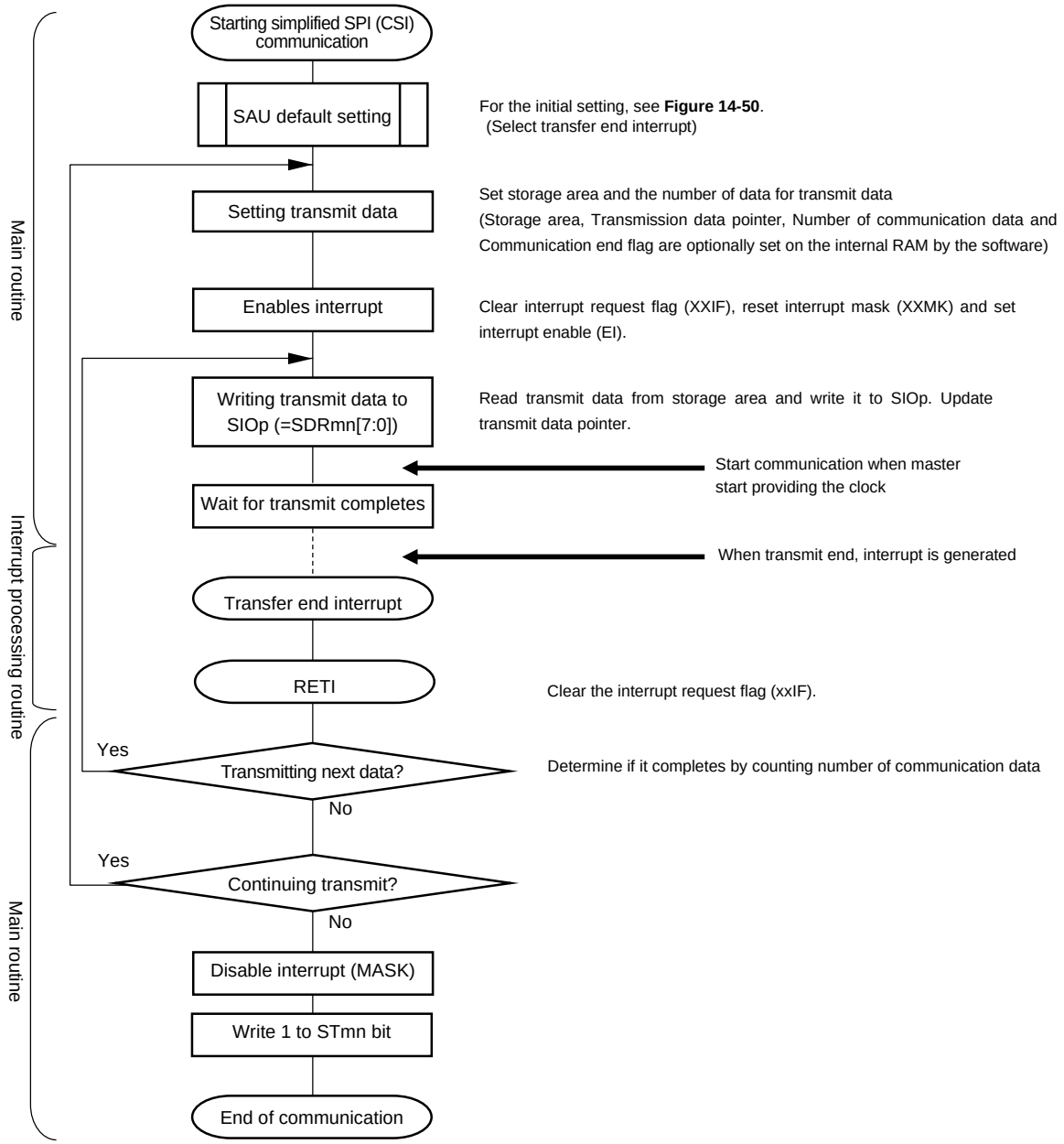

(4) Processing flow (in continuous transmission mode)

Figure 14-55. Timing Chart of Slave Transmission (in Continuous Transmission Mode)
(Type 1: DAPmn = 0, CKPmn = 0)

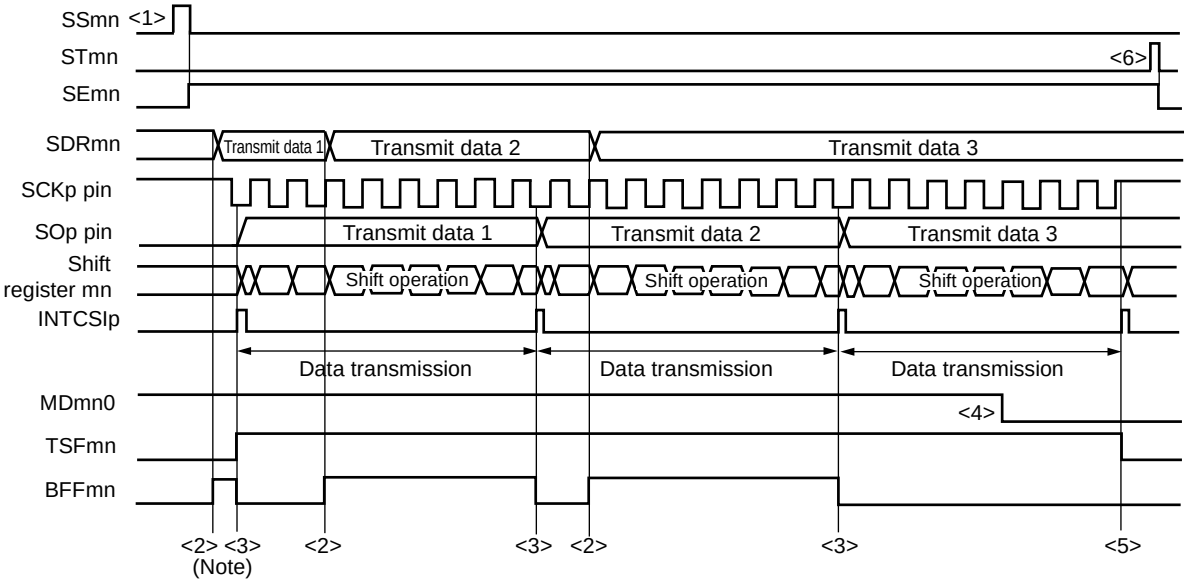

Note If transmit data is written to the SDRmn register while the BFFmn bit of serial status register mn (SSRmn) is 1 (valid data is stored in serial data register mn (SDRmn)), the transmit data is overwritten.

Caution **The MDmn0 bit of serial mode register mn (SMRmn) can be rewritten even during operation. However, rewrite it before transfer of the last bit is started.**

Remark m: Unit number (m = 0), n: Channel number (n = 0, 2), p: CSI number (p = 00, 10), mn = 00, 02

Figure 14-56. Flowchart of Slave Transmission (in Continuous Transmission Mode)

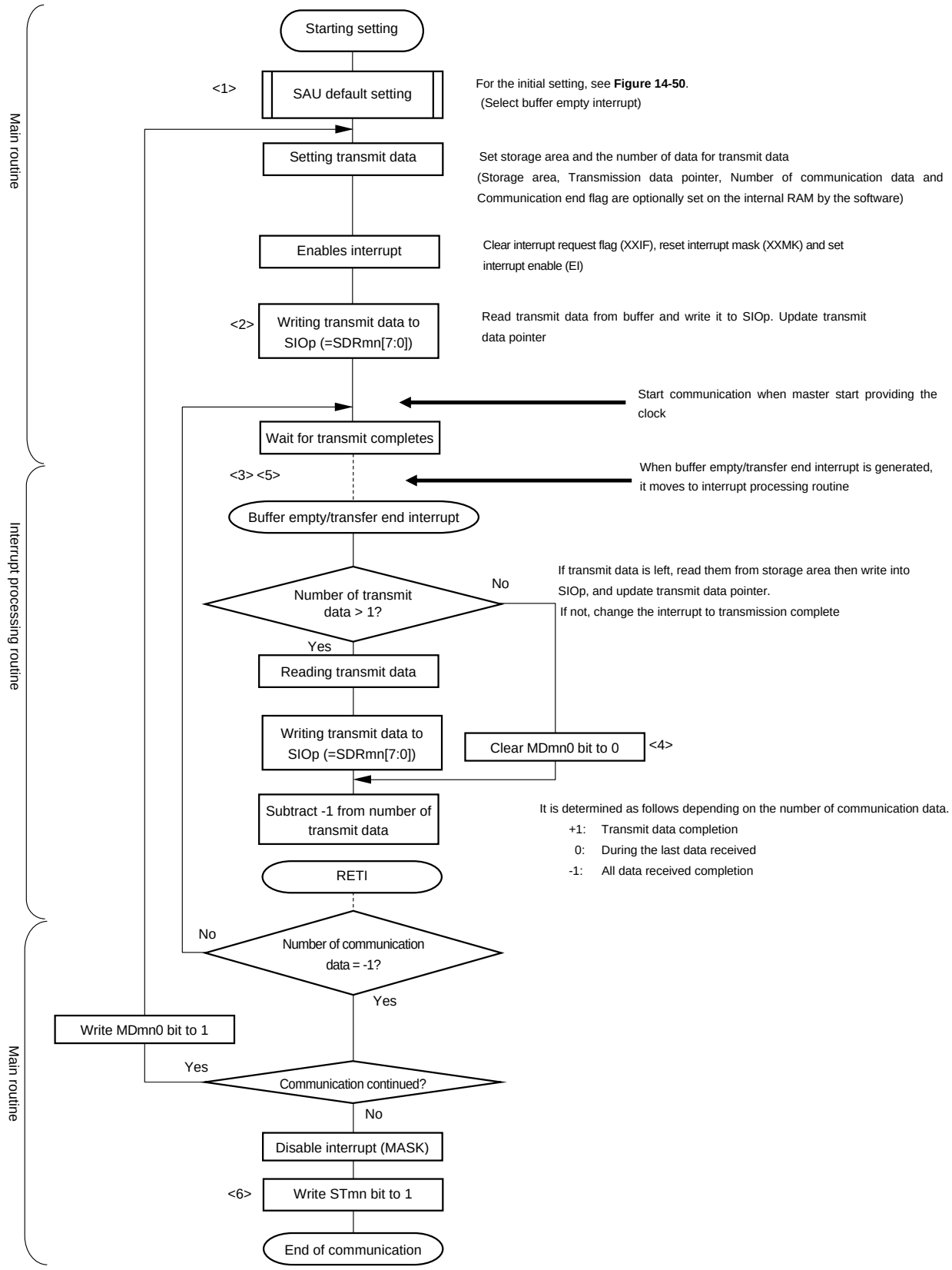

Remark <1> to <6> in the figure correspond to <1> to <6> in **Figure 14-55 Timing Chart of Slave Transmission (in Continuous Transmission Mode)**.

14.5.5 Slave reception

Slave reception is that the RL78 microcontroller receives data from another device in the state of a transfer clock being input from another device.

Simplified SPI	CSI00	CSI10
Target channel	Channel 0 of SAU0	Channel 2 of SAU0
Pins used	SCK00, SI00	SCK10, SI10
Interrupt	INTCSI00	INTCSI10
	Transfer end interrupt only (Setting the buffer empty interrupt is prohibited.)	
Error detection flag	Overrun error detection flag (OVFmn) only	
Transfer data length	7 or 8 bits	
Transfer rate	Max. f_{MCK}/6 [Hz] Notes 1, 2	
Data phase	Selectable by the DAPmn bit of the SCRmn register ● DAPmn = 0: Data input starts from the start of the operation of the serial clock. ● DAPmn = 1: Data input starts half a clock before the start of the serial clock operation.	
Clock phase	Selectable by the CKPmn bit of the SCRmn register ● CKPmn = 0: Non-reverse ● CKPmn = 1: Reverse	
Data direction	MSB or LSB first	

Notes 1. Because the external serial clock input to the SCK00, SCK10 pins is sampled internally and used, the fastest transfer rate is f_{MCK}/6 [Hz].

2. Use this operation within a range that satisfies the conditions above and the peripheral functions characteristics in the electrical specifications (see **CHAPTER 32 ELECTRICAL SPECIFICATIONS (T_A = –40 to +85°C)** and **CHAPTER 33 ELECTRICAL SPECIFICATIONS (T_A = –40 to +105°C)**).

Remarks 1. f_{MCK}: Operation clock frequency of target channel
f_{SCK}: Serial clock frequency

2. m: Unit number (m = 0), n: Channel number (n = 0, 2), mn = 00, 02

(1) Register setting

Figure 14-57. Example of Contents of Registers for Slave Reception of Simplified SPI (CSI00, CSI10) (1/2)

(a) Serial mode register mn (SMRmn)

	15	14	13	12	11	10	9	8	7	6	5	4	3	2	1	0
SMRmn	CKSmn 0/1	CCSmn 1	0	0	0	0	0	STSmn 0	0	SISmn0 0	1	0	0	MDmn2 0	MDmn1 0	MDmn0 0

Operation clock (f_{MCK}) of channel n
0: Prescaler output clock CKm0 set by the SPSm register
1: Prescaler output clock CKm1 set by the SPSm register

Interrupt source of channel n
0: Transfer end interrupt

(b) Serial communication operation setting register mn (SCRmn)

	15	14	13	12	11	10	9	8	7	6	5	4	3	2	1	0
SCRmn	TXEmn 0	RXEmn 1	DAPmn 0/1	CKPmn 0/1	0	EOCmn 0	PTCmn1 0	PTCmn0 0	DIRmn 0/1	0	SLCmn1 0	SLCmn0 0	0	1	DLSmn1 1Note	DLSmn0 0/1

Selection of the data and clock phase (For details about the setting, see **14.3 Registers Controlling Serial Array Unit**.)

Selection of data transfer sequence
0: Inputs/outputs data with MSB first
1: Inputs/outputs data with LSB first.

Setting of data length
0: 7-bit data length
1: 8-bit data length

(c) Serial data register mn (SDRmn) (lower 8 bits: SIOp)

	15	14	13	12	11	10	9	8	7	6	5	4	3	2	1	0
SDRmn	0000000 Baud rate setting							0	Receive data							

SIOp

(d) Serial output register m (SOm) …The Register that not used in this mode.

	15	14	13	12	11	10	9	8	7	6	5	4	3	2	1	0
SOm	0	0	0	0	1	CKOm2 ×	1	CKOm0 ×	0	0	0	0	1	SOm2 ×	1	SOm0 ×

Note Only provided for the SCR00 register. This bit is fixed to 1 for the other registers.

Remarks 1. m: Unit number (m = 0), n: Channel number (n = 0, 2), p: CSI number (p = 00, 10), mn = 00, 02

2. ☐: Setting is fixed in the simplified SPI (CSI) slave transmission mode,

▒: Setting disabled (set to the initial value)

×: Bit that cannot be used in this mode (set to the initial value when not used in any mode)

0/1: Set to 0 or 1 depending on the usage of the user

Figure 14-57. Example of Contents of Registers for Slave Reception of Simplified SPI (CSI00, CSI10) (2/2)

(e) Serial output enable register m (SOEm) …The Register that not used in this mode.

	15	14	13	12	11	10	9	8	7	6	5	4	3	2	1	0
SOEm	0	0	0	0	0	0	0	0	0	0	0	0	0	SOEm2 ×	0	SOEm0 ×

(f) Serial channel start register m (SSm) … Sets only the bits of the target channel to 1.

	15	14	13	12	11	10	9	8	7	6	5	4	3	2	1	0
SSm	0	0	0	0	0	0	0	0	0	0	0	0	SSm3 ×	SSm2 0/1	SSm1 ×	SSm0 0/1

Remarks 1. m: Unit number (m = 0), n: Channel number (n = 0, 2), p: CSI number (p = 00, 10), mn = 00, 02

2. ▒ : Setting disabled (set to the initial value)

×: Bit that cannot be used in this mode (set to the initial value when not used in any mode)

0/1: Set to 0 or 1 depending on the usage of the user

(2) Operation procedure

Figure 14-58. Initial Setting Procedure for Slave Reception

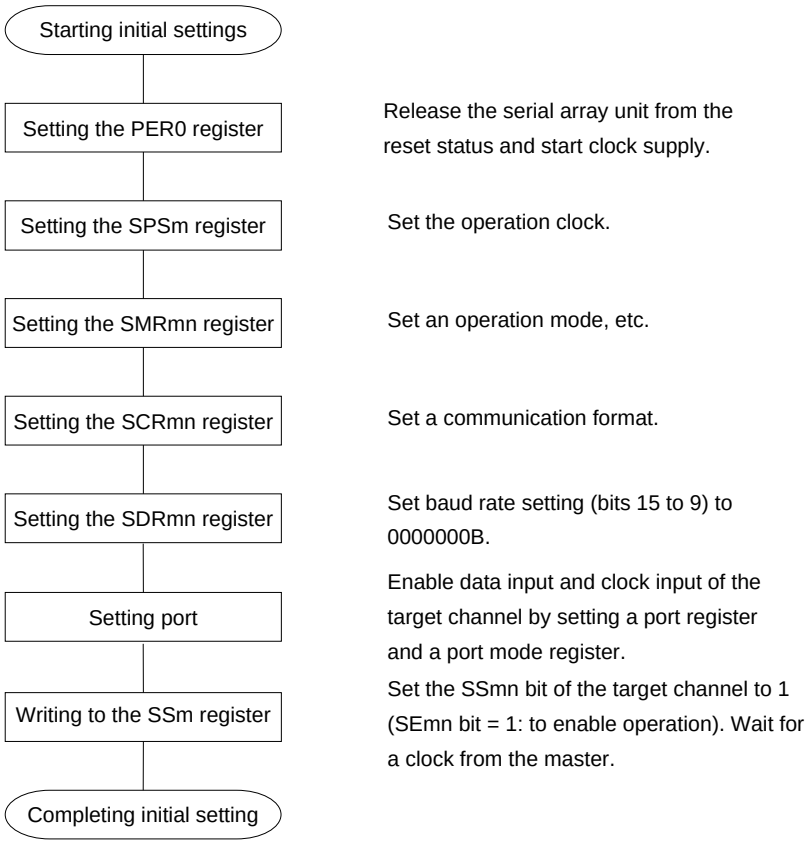

Figure 14-59. Procedure for Stopping Slave Reception

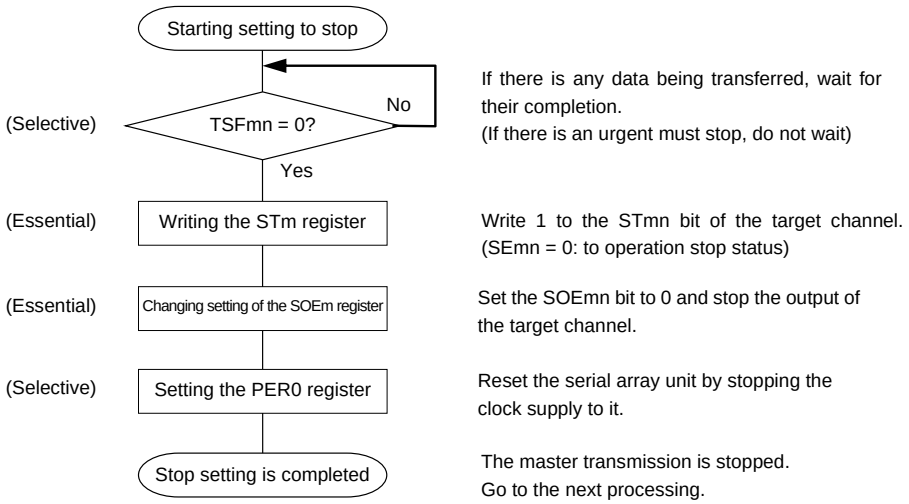

Figure 14-60. Procedure for Resuming Slave Reception

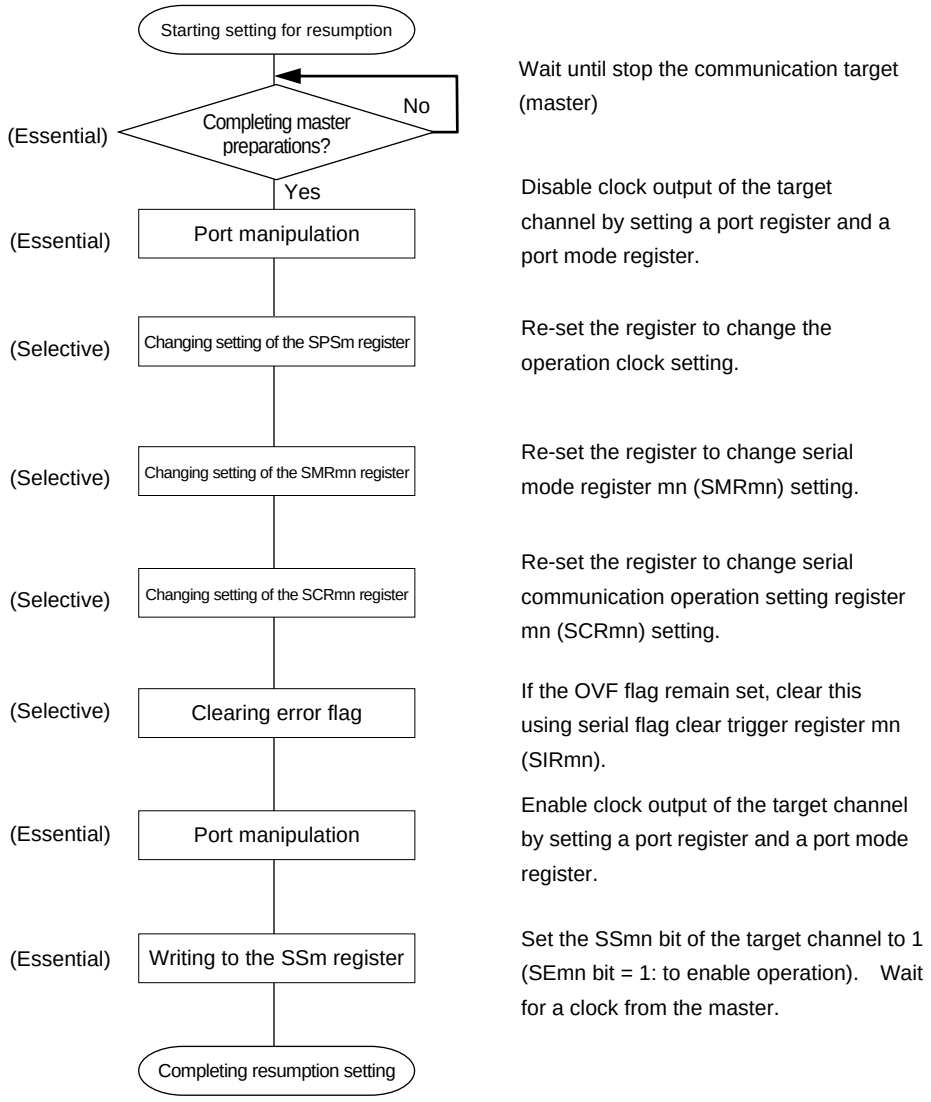

Remark If PER0 is rewritten while stopping the master transmission and the clock supply is stopped, wait until the transmission target (master) stops or transmission finishes, and then perform initialization instead of restarting the transmission.

(3) Processing flow (in single-reception mode)

Figure 14-61. Timing Chart of Slave Reception (in Single-Reception Mode)
(Type 1: DAPmn = 0, CKPmn = 0)

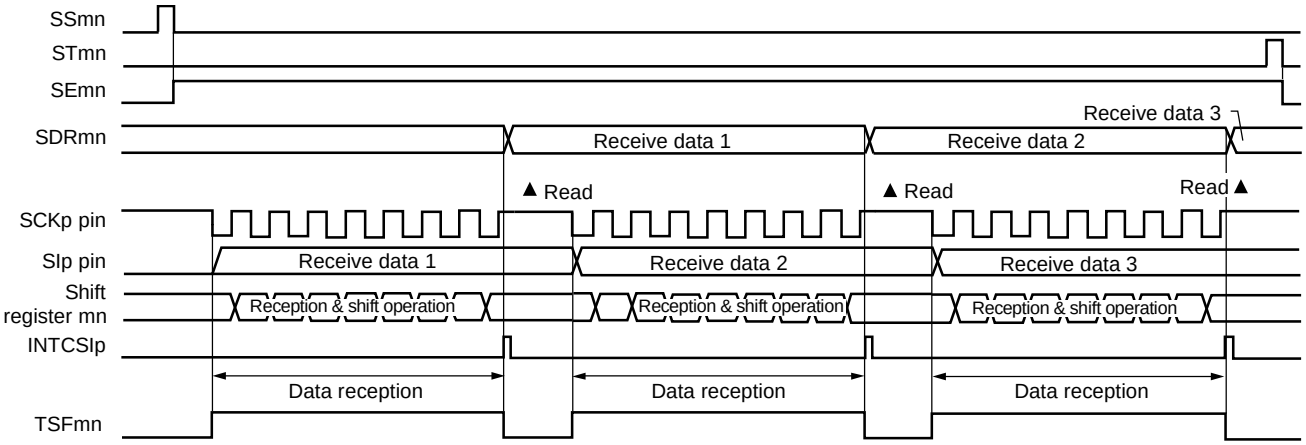

Remark m: Unit number (m = 0), n: Channel number (n = 0, 2), p: CSI number (p = 00, 10), mn = 00, 02

Figure 14-62. Flowchart of Slave Reception (in Single-Reception Mode)

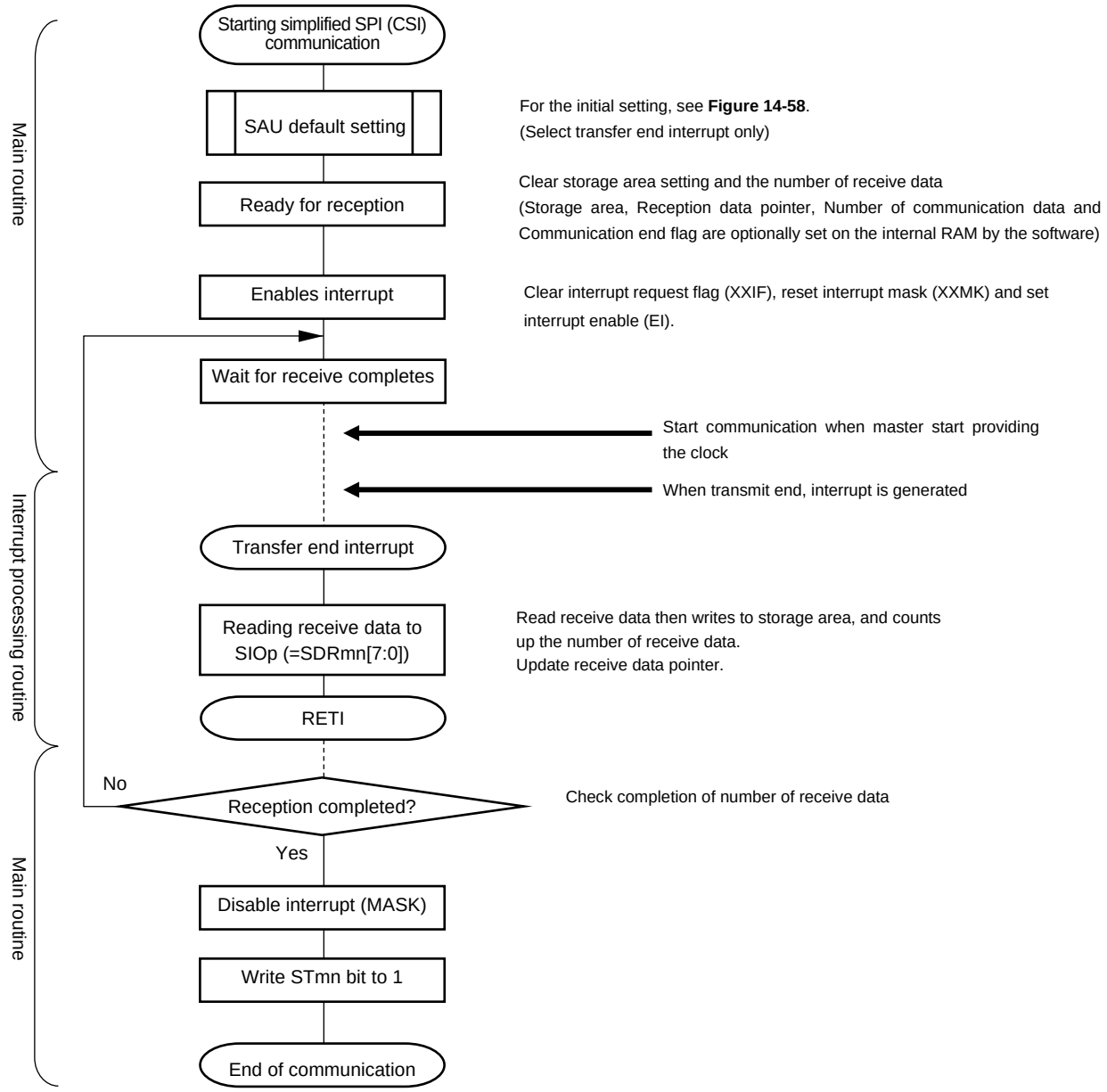

14.5.6 Slave transmission/reception

Slave transmission/reception is that the RL78 microcontroller transmits/receives data to/from another device in the state of a transfer clock being input from another device.

Simplified SPI	CSI00	CSI10
Target channel	Channel 0 of SAU0	Channel 2 of SAU0
Pins used	SCK00, SI00, SO00	SCK10, SI10, SO10
Interrupt	INTCSI00	INTCSI10
	Transfer end interrupt (in single-transfer mode) or buffer empty interrupt (in continuous transfer mode) can be selected.	
Error detection flag	Overrun error detection flag (OVFmn) only	
Transfer data length	7 or 8 bits	
Transfer rate	Max. f_{MCK}/6 [Hz][Notes 1, 2].	
Data phase	Selectable by the DAPmn bit of the SCRmn register ● DAPmn = 0: Data I/O starts from the start of the operation of the serial clock. ● DAPmn = 1: Data I/O starts half a clock before the start of the serial clock operation.	
Clock phase	Selectable by the CKPmn bit of the SCRmn register ● CKPmn = 0: Non-reverse ● CKPmn = 1: Reverse	
Data direction	MSB or LSB first	

Notes 1. Because the external serial clock input to the SCK00, SCK10 pins is sampled internally and used, the fastest transfer rate is f_{MCK}/6 [Hz].

2. Use this operation within a range that satisfies the conditions above and the peripheral functions characteristics in the electrical specifications (see **CHAPTER 32 ELECTRICAL SPECIFICATIONS (T_A = –40 to +85°C)** and **CHAPTER 33 ELECTRICAL SPECIFICATIONS (T_A = –40 to +105°C)**).

Remarks 1. f_{MCK}: Operation clock frequency of target channel
f_{CLK}: Serial clock frequency

2. m: Unit number (m = 0), n: Channel number (n = 0, 2), mn = 00, 02

(1) Register setting

Figure 14-63. Example of Contents of Registers for Slave Transmission/Reception of Simplified SPI (CSI00, CSI10) (1/2)

(a) Serial mode register mn (SMRmn)

	15	14	13	12	11	10	9	8	7	6	5	4	3	2	1	0
SMRmn	CKSmn 0/1	CCSmn 1	0	0	0	0	0	STSmn 0	0	SISmn0 0	1	0	0	MDmn2 0	MDmn1 0	MDmn0 0/1

Operation clock (f_{MCK}) of channel n
0: Prescaler output clock CKm0 set by the SPSm register
1: Prescaler output clock CKm1 set by the SPSm register

Interrupt source of channel n
0: Transfer end interrupt
1: Buffer empty interrupt

(b) Serial communication operation setting register mn (SCRmn)

	15	14	13	12	11	10	9	8	7	6	5	4	3	2	1	0
SCRmn	TXEmn 1	RXEmn 1	DAPmn 0/1	CKPmn 0/1	0	EOCmn 0	PTCmn1 0	PTCmn0 0	DIRmn 0/1	0	SLCmn1 0	SLCmn0 0	0	1	DLSmn1 1Note	DLSmn0 0/1

Selection of the data and clock phase (For details about the setting, see **14.3 Registers Controlling Serial Array Unit**.)

Selection of data transfer sequence
0: Inputs/outputs data with MSB first
1: Inputs/outputs data with LSB first.

Setting of data length
0: 7-bit data length
1: 8-bit data length

(c) Serial data register mn (SDRmn) (lower 8 bits: SIOp)

	15	14	13	12	11	10	9	8	7	6	5	4	3	2	1	0
SDRmn	0000000 Baud rate setting							0	Transmit data setting/receive data register							

SIOp

(d) Serial output register m (SOm) … Sets only the bits of the target channel.

	15	14	13	12	11	10	9	8	7	6	5	4	3	2	1	0
SOm	0	0	0	0	1	CKOm2 ×	1	CKOm0 ×	0	0	0	0	1	SOm2 0/1	1	SOm0 0/1

Note Only provided for the SCR00 register. This bit is fixed to 1 for the other registers.

Caution Be sure to set transmit data to the SIOp register before the clock from the master is started.

Remarks 1. m: Unit number (m = 0), n: Channel number (n = 0, 2), p: CSI number (p = 00, 10), mn = 00, 02

2. ☐ : Setting is fixed in the simplified SPI (CSI) slave transmission/reception mode,
▒ : Setting disabled (set to the initial value)
×: Bit that cannot be used in this mode (set to the initial value when not used in any mode)
0/1: Set to 0 or 1 depending on the usage of the user

Figure 14-63. Example of Contents of Registers for Slave Transmission/Reception of Simplified SPI (CSI00, CSI10) (2/2)

(e) Serial output enable register m (SOEm) … Sets only the bits of the target channel to 1.

	15	14	13	12	11	10	9	8	7	6	5	4	3	2	1	0
SOEm	0	0	0	0	0	0	0	0	0	0	0	0	0	SOEm2 0/1	0	SOEm0 0/1

(f) Serial channel start register m (SSm) … Sets only the bits of the target channel to 1.

	15	14	13	12	11	10	9	8	7	6	5	4	3	2	1	0
SSm	0	0	0	0	0	0	0	0	0	0	0	0	SSm3 ×	SSm2 0/1	SSm1 ×	SSm0 0/1

Remarks 1. m: Unit number (m = 0), n: Channel number (n = 0, 2), p: CSI number (p = 00, 10), mn = 00, 02

2. ☐ : Setting disabled (set to the initial value)

×: Bit that cannot be used in this mode (set to the initial value when not used in any mode)

0/1: Set to 0 or 1 depending on the usage of the user

(2) Operation procedure

Figure 14-64. Initial Setting Procedure for Slave Transmission/Reception

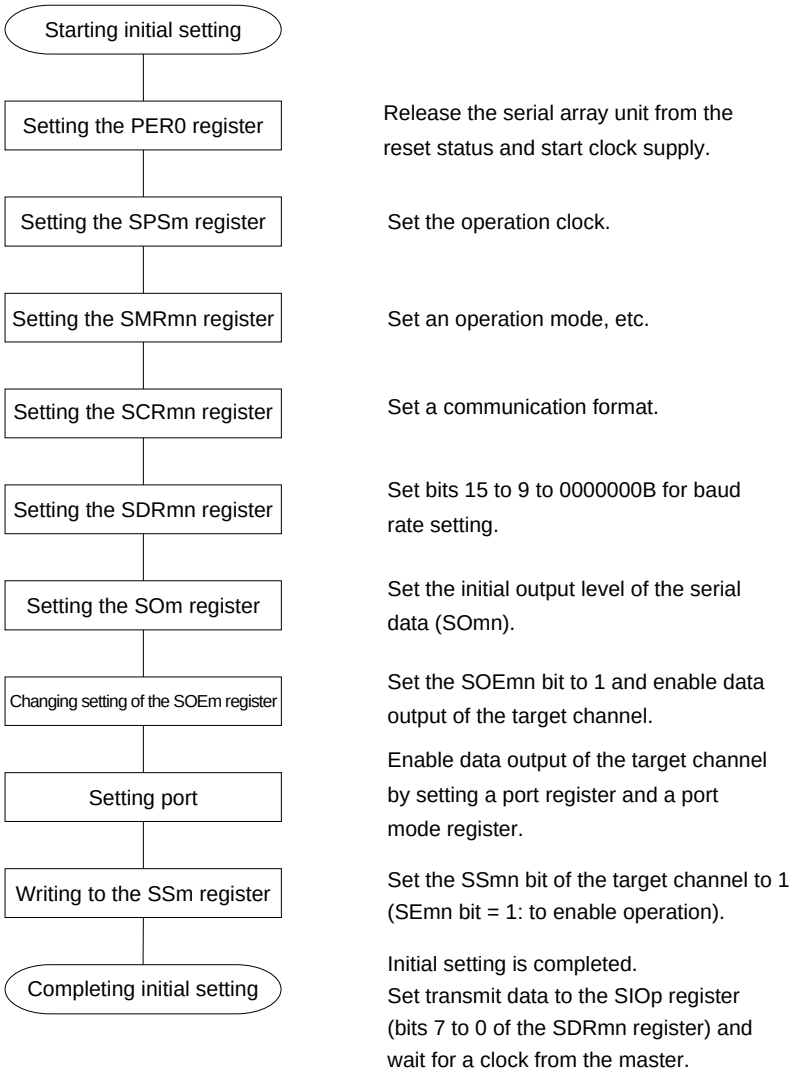

Figure 14-65. Procedure for Stopping Slave Transmission/Reception

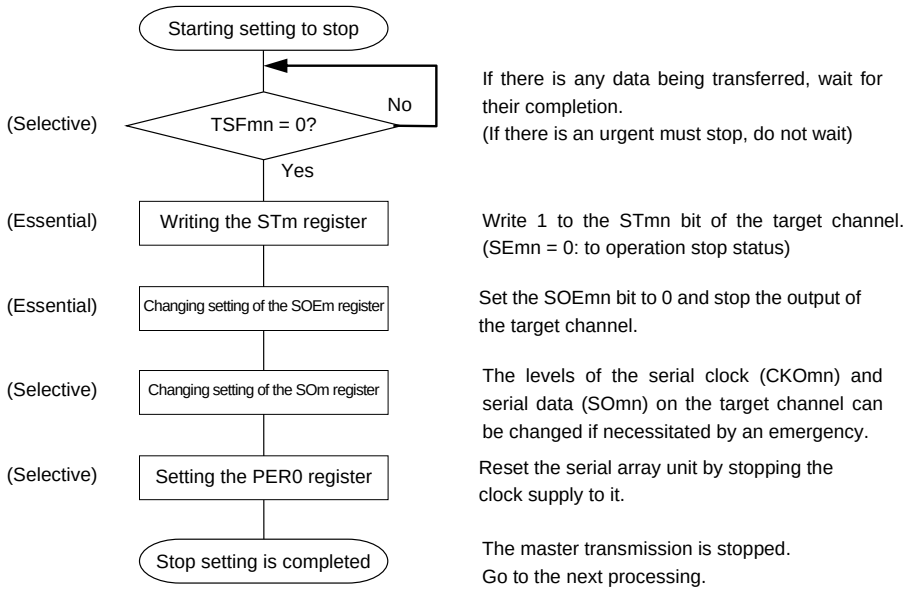

Figure 14-66. Procedure for Resuming Slave Transmission/Reception

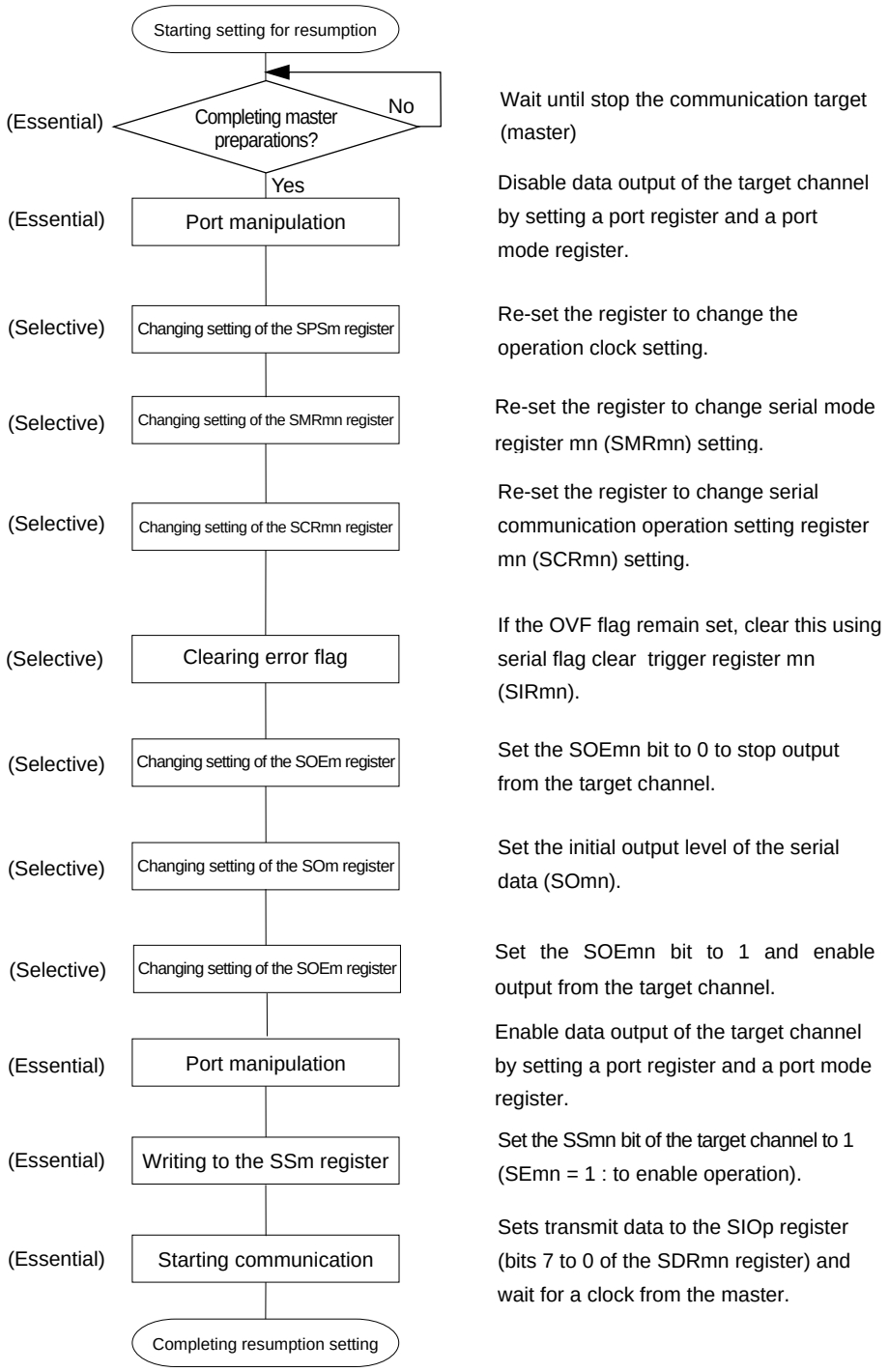

Cautions 1. Be sure to set transmit data to the SIOp register before the clock from the master is started.

2. If PER0 is rewritten while stopping the master transmission and the clock supply is stopped, wait until the transmission target (master) stops or transmission finishes, and then perform initialization instead of restarting the transmission.

(3) Processing flow (in single-transmission/reception mode)

Figure 14-67. Timing Chart of Slave Transmission/Reception (in Single-Transmission/Reception Mode) (Type 1: DAPmn = 0, CKPmn = 0)

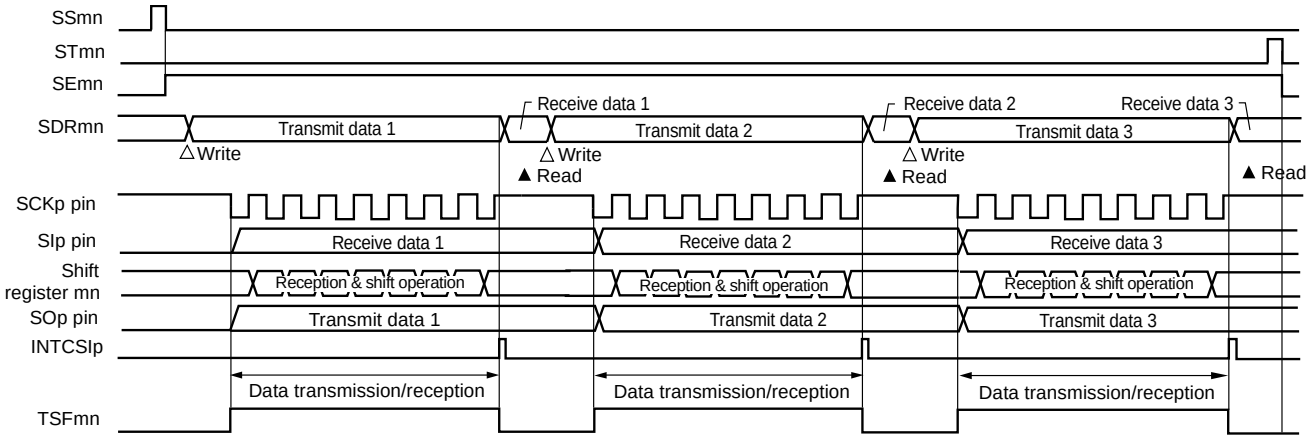

Remark m: Unit number (m = 0), n: Channel number (n = 0, 2), p: CSI number (p = 00, 10), mn = 00, 02

Figure 14-68. Flowchart of Slave Transmission/Reception (in Single-Transmission/Reception Mode)

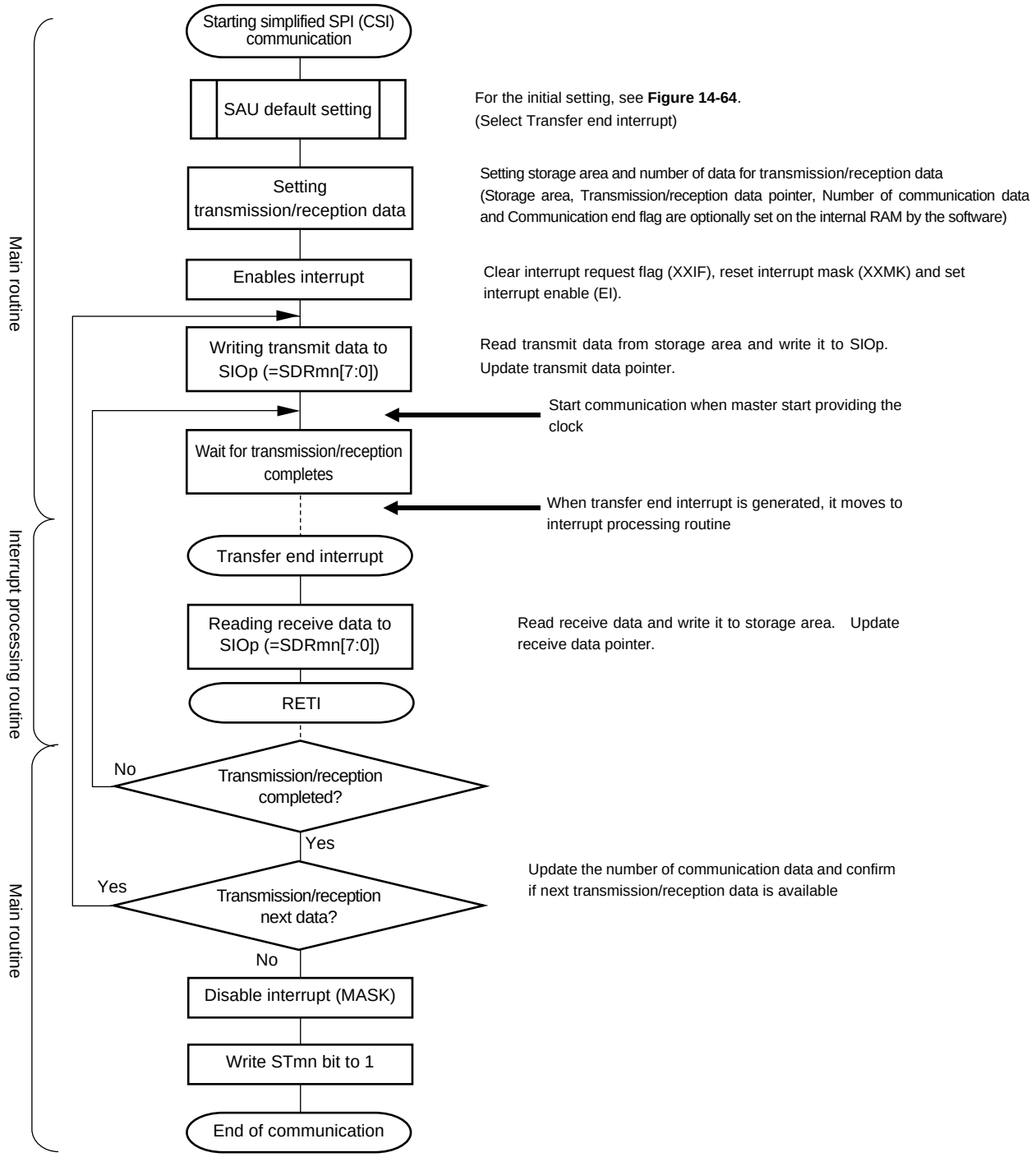

Caution Be sure to set transmit data to the SIOp register before the clock from the master is started.

(4) Processing flow (in continuous transmission/reception mode)

Figure 14-69. Timing Chart of Slave Transmission/Reception (in Continuous Transmission/Reception Mode) (Type 1: DAPmn = 0, CKPmn = 0)

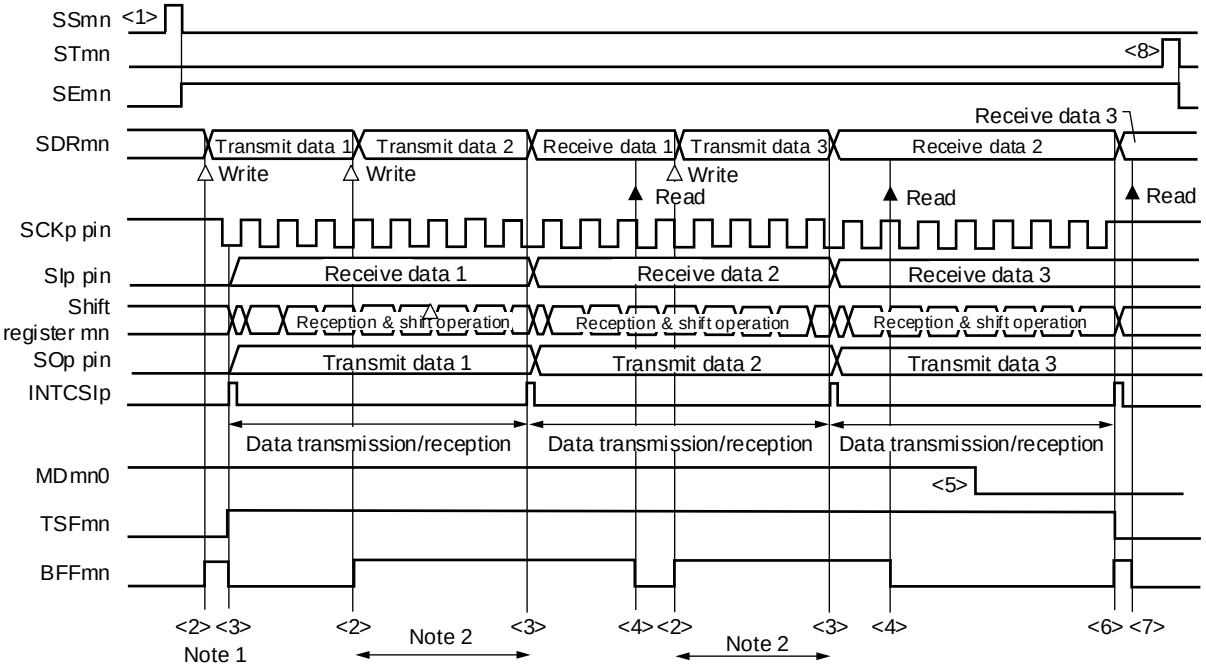

Notes 1. If transmit data is written to the SDRmn register while the BFFmn bit of serial status register mn (SSRmn) is 1 (valid data is stored in serial data register mn (SDRmn)), the transmit data is overwritten.

2. The transmit data can be read by reading the SDRmn register during this period. At this time, the transfer operation is not affected.

Caution The MDmn0 bit of serial mode register mn (SMRmn) can be rewritten even during operation. However, rewrite it before transfer of the last bit is started, so that it has been rewritten before the transfer end interrupt of the last transmit data.

Remarks 1. <1> to <8> in the figure correspond to <1> to <8> in **Figure 14-70 Flowchart of Slave Transmission/Reception (in Continuous Transmission/Reception Mode)**.

2. m: Unit number (m = 0), n: Channel number (n = 0, 2), p: CSI number (p = 00, 10), mn = 00, 02

Figure 14-70. Flowchart of Slave Transmission/Reception (in Continuous Transmission/Reception Mode)

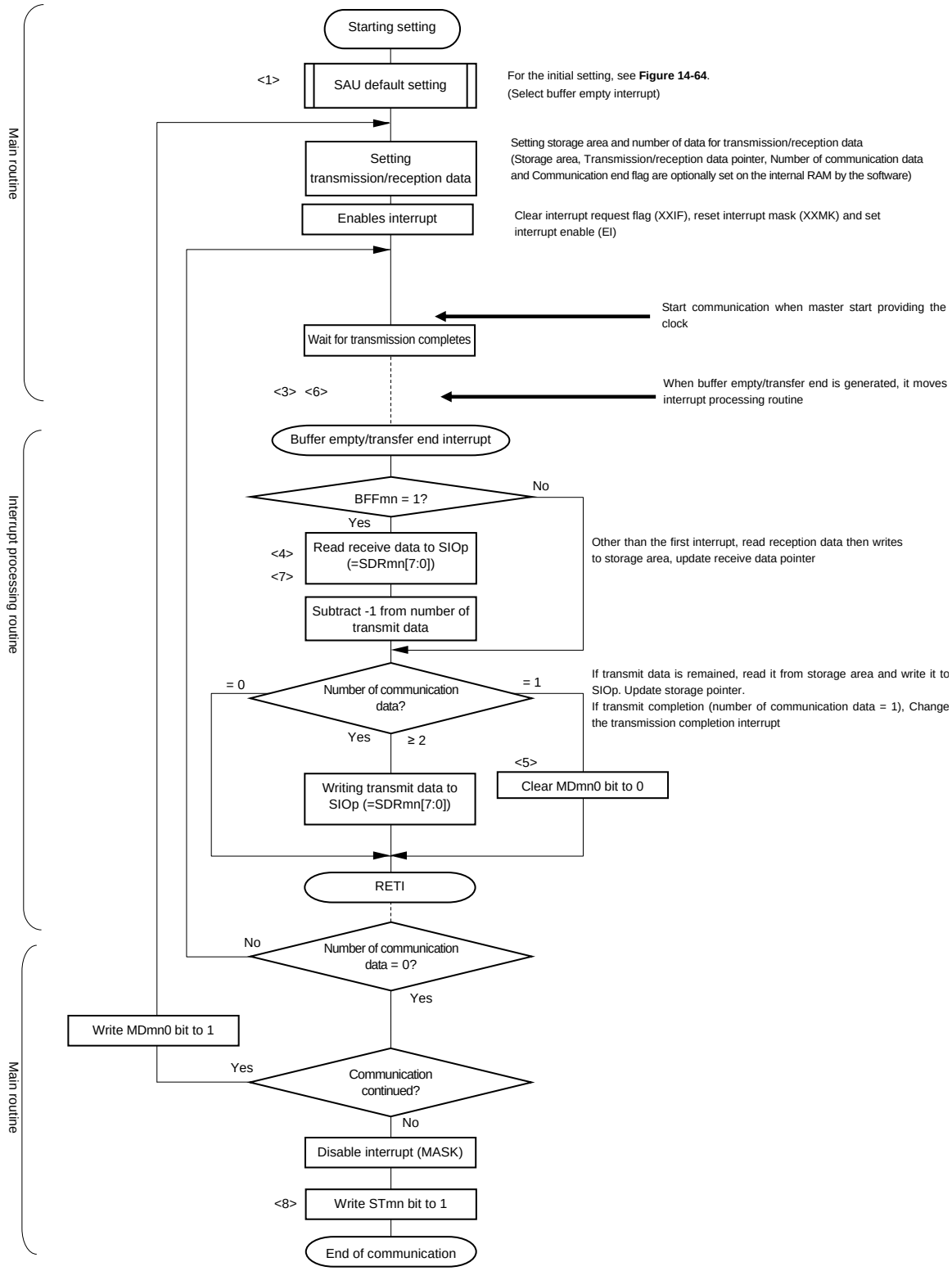

Caution Be sure to set transmit data to the SIOp register before the clock from the master is started.

Remark <1> to <8> in the figure correspond to <1> to <8> in **Figure 14-69 Timing Chart of Slave Transmission/Reception (in Continuous Transmission/Reception Mode)**.

14.5.7 SNOOZE mode function

SNOOZE mode makes simplified SPI (CSI) operate reception by SCKp pin input detection while the STOP mode. Normally simplified SPI (CSI) stops communication in the STOP mode. But, using the SNOOZE mode makes reception simplified SPI (CSI) operate unless the CPU operation by detecting SCKp pin input. Only CSI00 can be set to the SNOOZE mode.

When using the simplified SPI (CSI) in SNOOZE mode, make the following setting before switching to the STOP mode (see **Figure 14-72 Flowchart of SNOOZE Mode Operation (Once Startup)** and **Figure 14-74 Flowchart of SNOOZE Mode Operation (Once Startup)**).

● When using the SNOOZE mode function, set the SWCm bit of serial standby control register m (SSCm) to 1 just before switching to the STOP mode. After the initial setting has been completed, set the SSm0 bit of serial channel start register m (SSm) to 1.

● The CPU shifts to the SNOOZE mode on detecting the valid edge of the SCKp signal following a transition to the STOP mode. A CSIp starts reception on detecting input of the serial clock on the SCKp pin.

Cautions 1. The SNOOZE mode can only be specified when the high-speed on-chip oscillator clock is selected for f_{CLK}.

2. The maximum transfer rate when using CSIp in the SNOOZE mode is 1 Mbps.

(1) SNOOZE mode operation (once startup)

Figure 14-71. Timing Chart of SNOOZE Mode Operation (once startup) (Type 1: DAPmn = 0, CKPmn = 0)

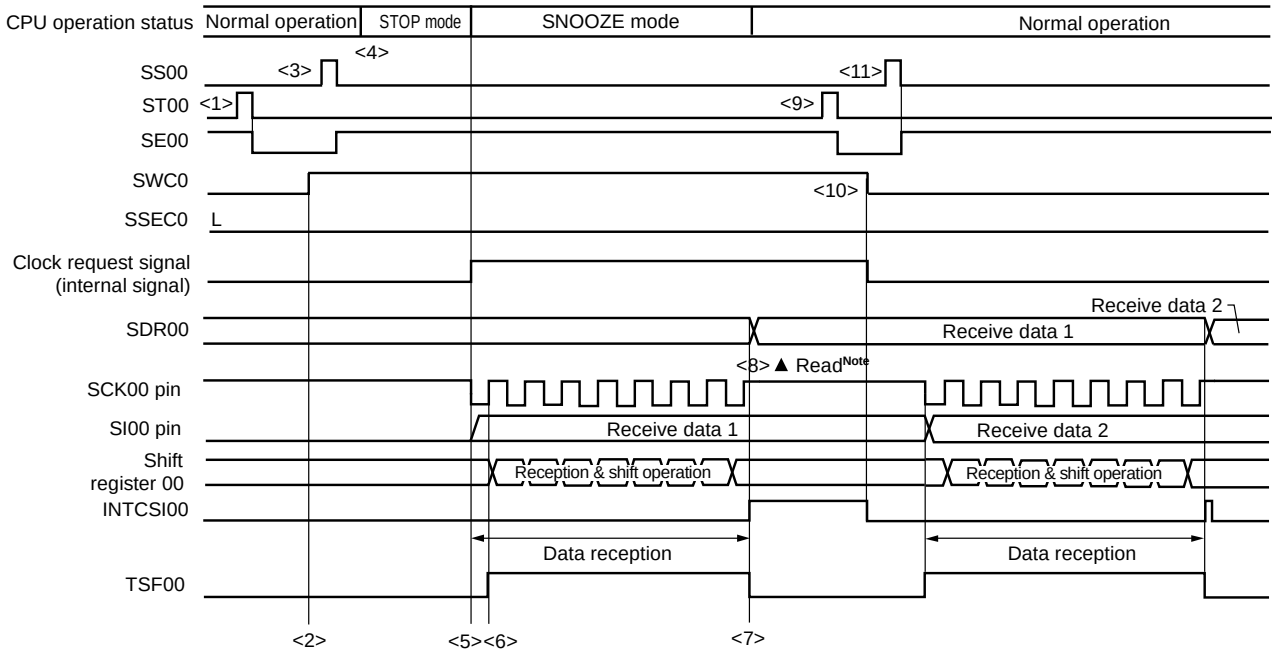

Note Only read received data while SWCm = 1 and before the next valid edge of the SCKp pin input is detected.

Cautions 1. Before switching to the SNOOZE mode or after reception operation in the SNOOZE mode finishes, set the STm0 bit to 1 (clear the SEm0 bit, and stop the operation).
And after completion the receive operation, also clearing SWCm bit to 0 (SNOOZE mode release).

2. When SWCm = 1, the BFFm1 and OVFm1 flags will not change.

Remarks 1. <1> to <11> in the figure correspond to <1> to <11> in **Figure 14-72 Flowchart of SNOOZE Mode Operation (Once Startup)**.

2. m = 0; p = 00

Figure 14-72. Flowchart of SNOOZE Mode Operation (Once Startup)

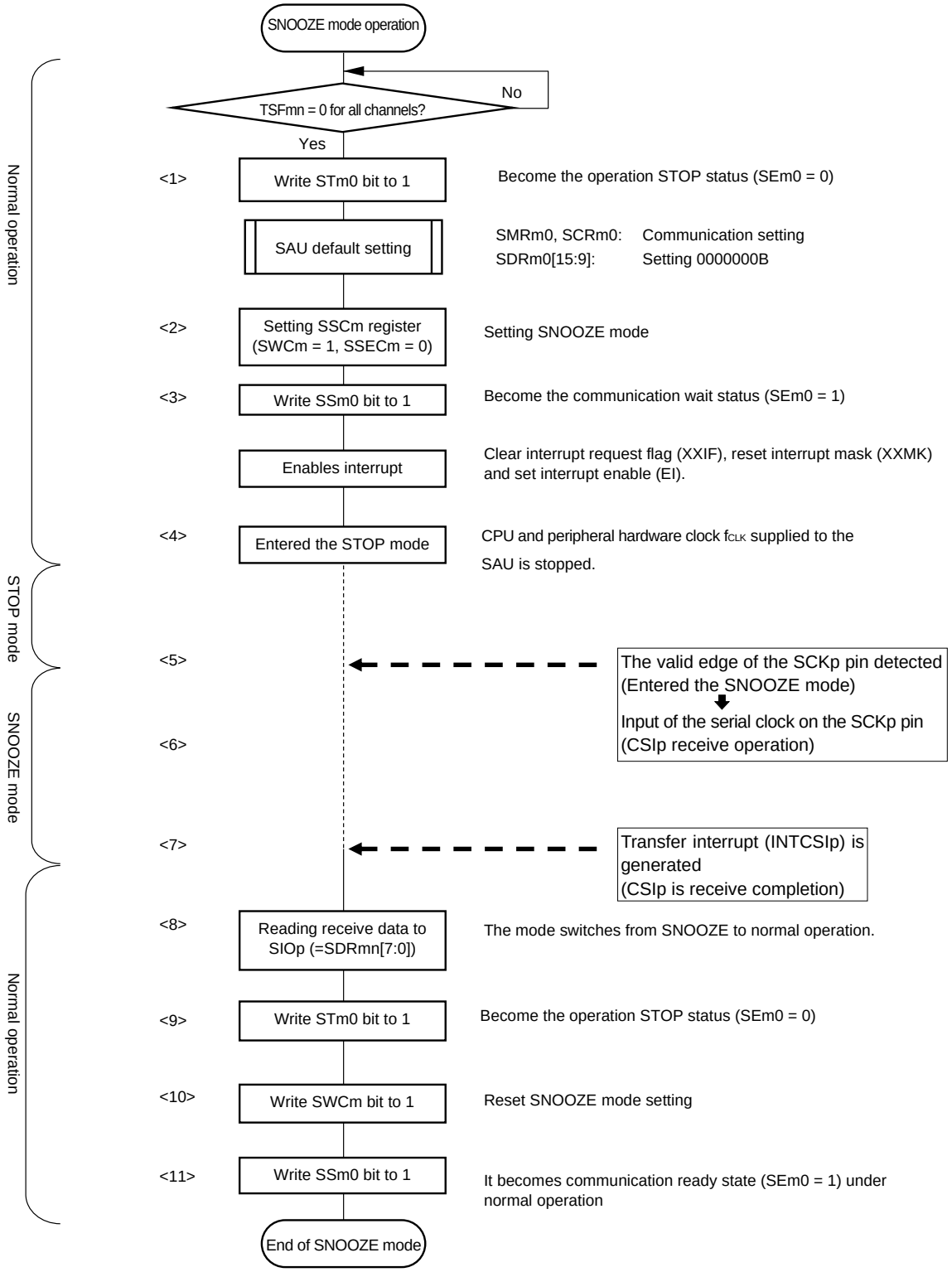

Remarks 1. <1> to <11> in the figure correspond to <1> to <11> in **Figure 14-71 Timing Chart of SNOOZE Mode Operation (once startup)**.

2. m = 0; p = 00

(2) SNOOZE mode operation (continuous startup)

Figure 14-73. Timing Chart of SNOOZE Mode Operation (continuous startup) (Type 1: DAPmn = 0, CKPmn = 0)

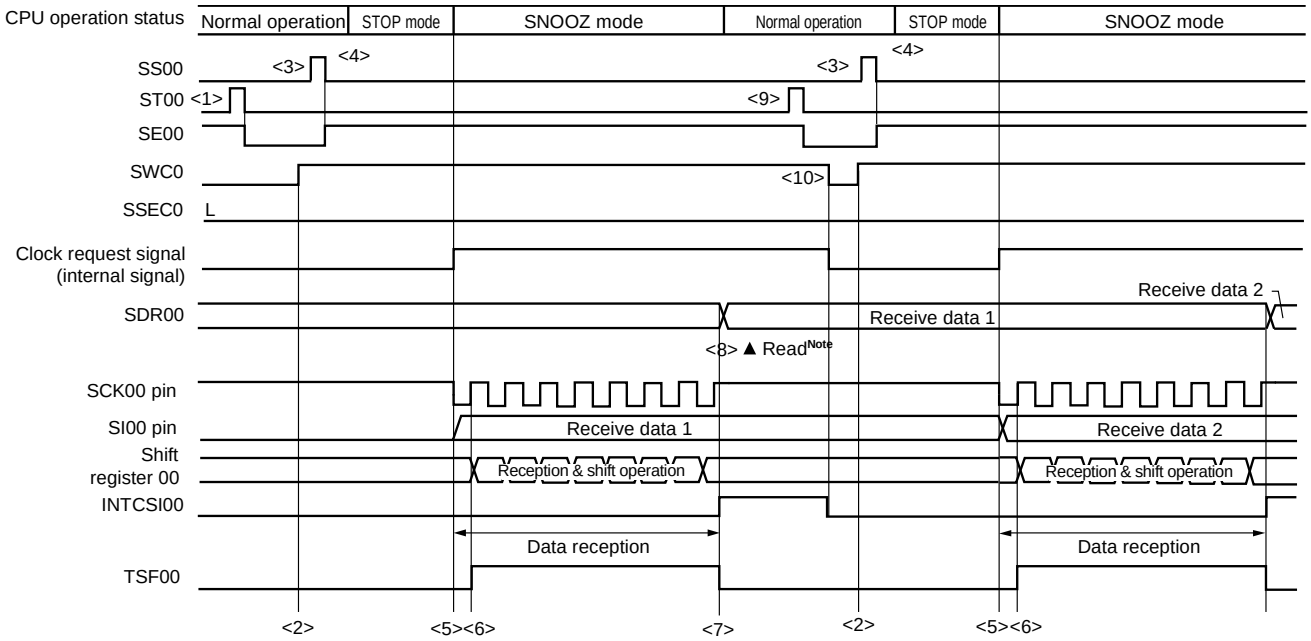

Note Only read received data while SWCm = 1 and before the next valid edge of the SCKp pin input is detected.

Cautions 1. Before switching to the SNOOZE mode or after reception operation in the SNOOZE mode finishes, set the STm0 bit to 1 (clear the SEm0 bit, and stop the operation).
And after completion the receive operation, also clearing SWCm bit to 0 (SNOOZE release).
2. When SWCm = 1, the BFFm1 and OVFm1 flags will not change.

Remarks 1. <1> to <10> in the figure correspond to <1> to <10> in **Figure 14-74 Flowchart of SNOOZE Mode Operation (Continuous Startup)**.
2. m = 0; p = 00

Figure 14-74. Flowchart of SNOOZE Mode Operation (Continuous Startup)

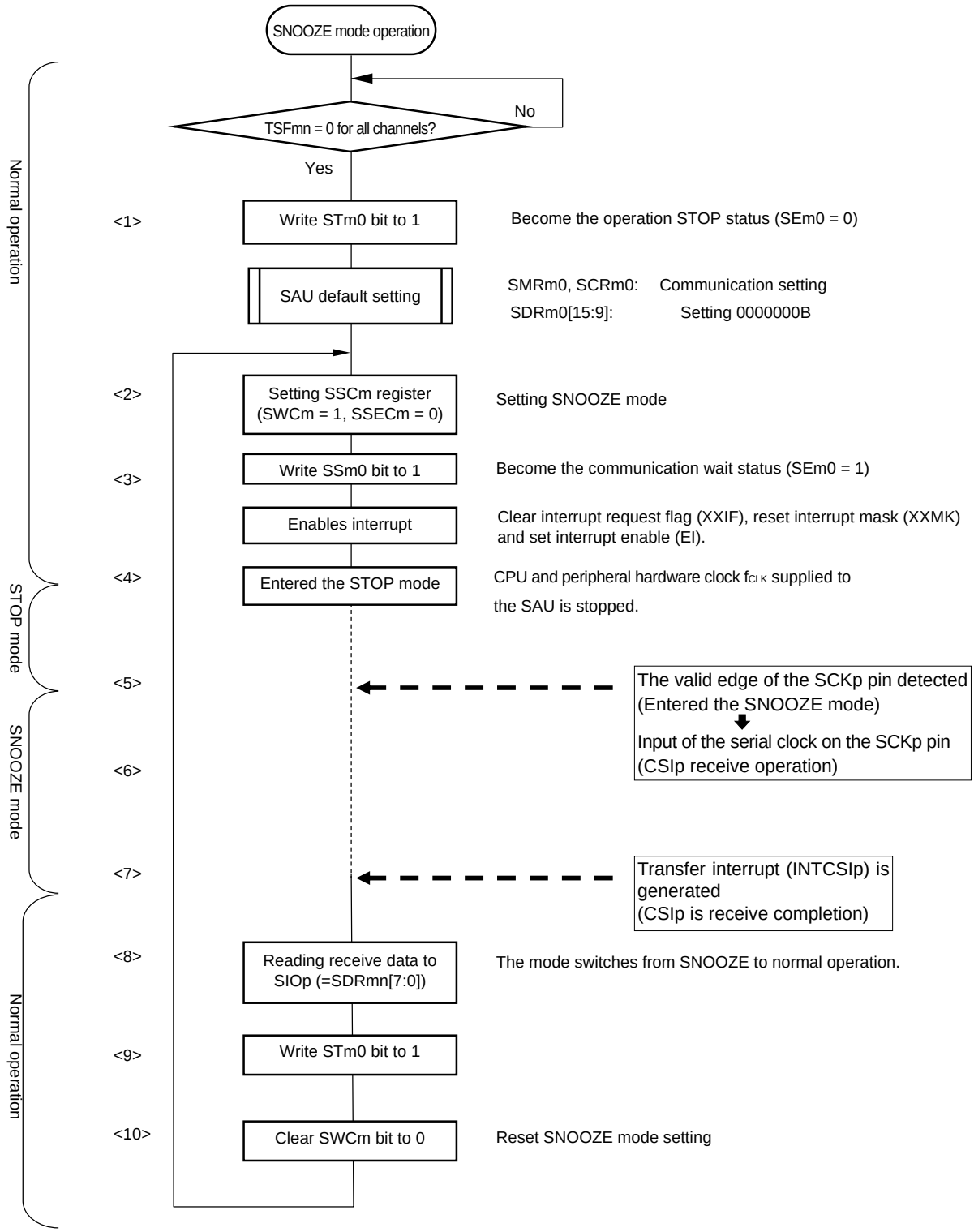

Remarks 1. <1> to <10> in the figure correspond to <1> to <10> in **Figure 14-73 Timing Chart of SNOOZE Mode Operation (Continuous Startup)**.

2. m = 0; p = 00

14.5.8 Calculating transfer clock frequency

The transfer clock frequency for Simplified SPI (CSI00, CSI10) communication can be calculated by the following expressions.

(1) Master

(Transfer clock frequency) = {Operation clock (f_{MCK}) frequency of target channel} ÷ (SDRmn[15:9] + 1) ÷ 2 [Hz]

(2) Slave

(Transfer clock frequency) = {Frequency of serial clock (SCK) supplied by master}[Note] [Hz]

Note The permissible maximum transfer clock frequency is f_{MCK}/6.

Remark The value of SDRmn[15:9] is the value of bits 15 to 9 of serial data register mn (SDRmn) (0000000B to 1111111B) and therefore is 0 to 127.

The operation clock (f_{MCK}) is determined by serial clock select register m (SPSm) and bit 15 (CKSmn) of serial mode register mn (SMRmn).

Table 14-2. Selection of Operation Clock For Simplified SPI

SMRmn Register	SPSm Register								Operation Clock (f_{MCK})[Note]	
CKSmn	PRS m13	PRS m12	PRS m11	PRS m10	PRS m03	PRS m02	PRS m01	PRS m00		f_{CLK} = 24 MHz
0	X	X	X	X	0	0	0	0	f_{CLK}	24 MHz
	X	X	X	X	0	0	0	1	$f_{CLK}/2$	12 MHz
	X	X	X	X	0	0	1	0	$f_{CLK}/2^2$	6 MHz
	X	X	X	X	0	0	1	1	$f_{CLK}/2^3$	3 MHz
	X	X	X	X	0	1	0	0	$f_{CLK}/2^4$	1.5 MHz
	X	X	X	X	0	1	0	1	$f_{CLK}/2^5$	750 kHz
	X	X	X	X	0	1	1	0	$f_{CLK}/2^6$	375 kHz
	X	X	X	X	0	1	1	1	$f_{CLK}/2^7$	187.5 kHz
	X	X	X	X	1	0	0	0	$f_{CLK}/2^8$	93.8 kHz
	X	X	X	X	1	0	0	1	$f_{CLK}/2^9$	46.9 kHz
	X	X	X	X	1	0	1	0	$f_{CLK}/2^{10}$	23.4 kHz
	X	X	X	X	1	0	1	1	$f_{CLK}/2^{11}$	11.7 kHz
	X	X	X	X	1	1	0	0	$f_{CLK}/2^{12}$	5.86 kHz
	X	X	X	X	1	1	0	1	$f_{CLK}/2^{13}$	2.93 kHz
	X	X	X	X	1	1	1	0	$f_{CLK}/2^{14}$	1.46 kHz
	X	X	X	X	1	1	1	1	$f_{CLK}/2^{15}$	732 Hz
1	0	0	0	0	X	X	X	X	f_{CLK}	24 MHz
	0	0	0	1	X	X	X	X	$f_{CLK}/2$	12 MHz
	0	0	1	0	X	X	X	X	$f_{CLK}/2^2$	6 MHz
	0	0	1	1	X	X	X	X	$f_{CLK}/2^3$	3 MHz
	0	1	0	0	X	X	X	X	$f_{CLK}/2^4$	1.5 MHz
	0	1	0	1	X	X	X	X	$f_{CLK}/2^5$	750 kHz
	0	1	1	0	X	X	X	X	$f_{CLK}/2^6$	375 kHz
	0	1	1	1	X	X	X	X	$f_{CLK}/2^7$	187.5 kHz
	1	0	0	0	X	X	X	X	$f_{CLK}/2^8$	93.8 kHz
	1	0	0	1	X	X	X	X	$f_{CLK}/2^9$	46.9 kHz
	1	0	1	0	X	X	X	X	$f_{CLK}/2^{10}$	23.4 kHz
	1	0	1	1	X	X	X	X	$f_{CLK}/2^{11}$	11.7 kHz
	1	1	0	0	X	X	X	X	$f_{CLK}/2^{12}$	5.86 kHz
	1	1	0	1	X	X	X	X	$f_{CLK}/2^{13}$	2.93 kHz
	1	1	1	0	X	X	X	X	$f_{CLK}/2^{14}$	1.46 kHz
	1	1	1	1	X	X	X	X	$f_{CLK}/2^{15}$	732 Hz

Note When changing the clock selected for f_{CLK} (by changing the system clock control register (CKC) value), do so after having stopped (serial channel stop register m (STm) = 000FH) the operation of the serial array unit (SAU).

Remarks 1. X: Don't care

2. m: Unit number (m = 0), n: Channel number (n = 0, 2), mn = 00, 02

14.5.9 Procedure for processing errors that occurred during Simplified SPI (CSI00, CSI10) communication

The procedure for processing errors that occurred during simplified SPI (CSI00, CSI10) communication is described in Figure 14-75.

Figure 14-75. Processing Procedure in Case of Overrun Error

Software manipulation	Hardware status	Remark
Reads serial data register mn (SDRmn). →	The BFFmn bit of the SSRmn register is set to 0 and channel n is enabled to receive data.	This is to prevent an overrun error if the next reception is completed during error processing.
Reads serial status register mn (SSRmn).		Error type is identified and the read value is used to clear error flag.
Writes 1 to serial flag clear trigger register mn (SIRmn). →	Error flag is cleared.	Error can be cleared only during reading, by writing the value read from the SSRmn register to the SIRmn register without modification.

Remark m: Unit number (m = 0), n: Channel number (n = 0, 2), mn = 00, 02

14.6 Operation of UART (UART0 to UART3) Communication

This is a start-stop synchronization function using two lines: serial/data transmission (TxD) and serial/data reception (RxD) lines. By using these two communication lines, each data frame, which consist of a start bit, data, parity bit, and stop bit, is transferred asynchronously (using the internal baud rate) between the microcontroller and the other communication party. Full-duplex asynchronous communication UART communication can be performed by using a channel dedicated to transmission (even-numbered channel) and a channel dedicated to reception (odd-numbered channel). The LIN-bus can be implemented by using UART0, timer array unit 0 (channel 7), and an external interrupt (INTP0).

[Data transmission/reception]

- Data length of 7, 8, or 9 bits[Note]
- Select the MSB/LSB first
- Level setting of transmit/receive data (selecting whether to reverse the level)
- Parity bit appending and parity check functions
- Stop bit appending, stop bit check function

[Interrupt function]

- Transfer end interrupt/buffer empty interrupt
- Error interrupt in case of framing error, parity error, or overrun error

[Error detection flag]

- Framing error, parity error, or overrun error

In addition, UART0 and UART2 reception support the SNOOZE mode. When RxD pin input is detected while in the STOP mode, the SNOOZE mode makes data reception that does not require the CPU possible. Only UART0, UART2 can be specified for the reception baud rate adjustment function.

The LIN-bus is accepted in UART0 (channels 0 and 1 of unit 0).

[LIN-bus functions]

- Wakeup signal detection
- Break field (BF) detection
- Sync field measurement, baud rate calculation

} Using the external interrupt (INTP0) and timer array unit 0 (channel 7)

Note Only UART0, UART2 can be specified for the 9-bit data length.

UART0 uses channels 0 and 1 of SAU0.
UART1 uses channels 2 and 3 of SAU0.
UART2 uses channels 0 and 1 of SAU1.
UART3 uses channels 2 and 3 of SAU1.

- 64-pin products

Unit	Channel	Used as Simplified SPI (CSI)	Used as UART	Used as Simplified I^2C
0	0	CSI00	UART0 (supporting LIN-bus)	IIC00
	1	–		–
	2	CSI10	UART1	IIC10
	3	–		–
1	0	–	UART2	–
	1	–		–

- 80-pin products

Unit	Channel	Used as Simplified SPI (CSI)	Used as UART	Used as Simplified I^2C
0	0	CSI00	UART0 (supporting LIN-bus)	IIC00
	1	–		–
	2	CSI10	UART1	IIC10
	3	–		–
1	0	–	UART2	–
	1	–		–
	2	–	UART3	–
	3	–		–

Select any function for each channel. Only the selected function is possible. If UART0 is selected for channels 0 and 1 of unit 0, for example, these channels cannot be used for CSI00. At this time, however, channel 2, 3, or other channels of the same unit can be used for a function other than UART0, such as CSI10, UART1, and IIC10.

Caution When using a serial array unit for UART, both the transmitter side (even-numbered channel) and the receiver side (odd-numbered channel) can only be used for UART.

UART performs the following four types of communication operations.

- UART transmission (See **14.6.1**.)
- UART reception (See **14.6.2**.)
- LIN transmission (UART2 only) (See **14.7.1**.)
- LIN reception (UART2 only) (See **14.7.2**.)

14.6.1 UART transmission

UART transmission is an operation to transmit data from the RL78 microcontroller to another device asynchronously (start-stop synchronization).

Of two channels used for UART, the even channel is used for UART transmission.

UART	UART0	UART1	UART2	UART3
Target channel	Channel 0 of SAU0	Channel 2 of SAU0	Channel 0 of SAU1	Channel 2 of SAU1
Pins used	TxD0	TxD1	TxD2	TxD3
Interrupt	INTST0	INTST1	INTST2	INTST3
	Transfer end interrupt (in single-transfer mode) or buffer empty interrupt (in continuous transfer mode) can be selected.			
Error detection flag	None			
Transfer data length	7, 8, or 9 bits[Note 1]			
Transfer rate	Max. $f_{MCK}/6$ [bps] (SDRmn [15:9] = 2 or more), Min. $f_{CLK}/(2 \times 2^{15} \times 128)$ [bps][Note 2]			
Data phase	Non-reverse output (default: high level) Reverse output (default: low level)			
Parity bit	The following selectable ● No parity bit ● Appending 0 parity ● Appending even parity ● Appending odd parity			
Stop bit	The following selectable ● Appending 1 bit ● Appending 2 bits			
Data direction	MSB or LSB first			

Notes 1. Only UART0, UART2 can be specified for the 9-bit data length.

2. Use this operation within a range that satisfies the conditions above and the peripheral functions characteristics in the electrical specifications (see **CHAPTER 32 ELECTRICAL SPECIFICATIONS (T_A = –40 to +85°C)** and **CHAPTER 33 ELECTRICAL SPECIFICATIONS (T_A = –40 to +105°C)**).

Remarks 1. f_{MCK}: Operation clock frequency of target channel
f_{CLK}: System clock frequency

2. m: Unit number (m = 0, 1), n: Channel number (n = 0, 2), mn = 00, 02, 10, 12

(1) Register setting

Figure 14-76. Example of Contents of Registers for UART Transmission of UART (UART0 to UART3) (80-pin products) (1/2)

(a) Serial mode register mn (SMRmn)

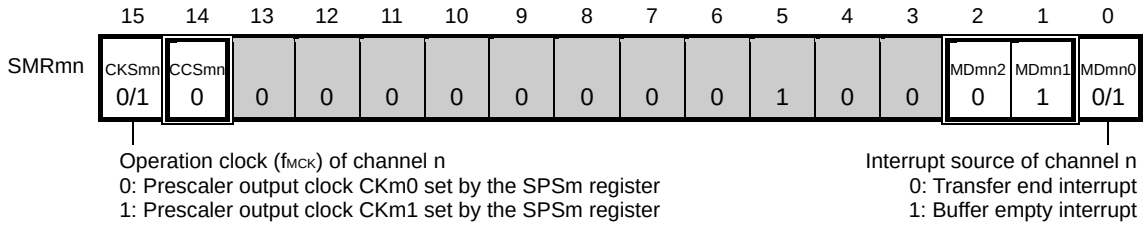

(b) Serial communication operation setting register mn (SCRmn)

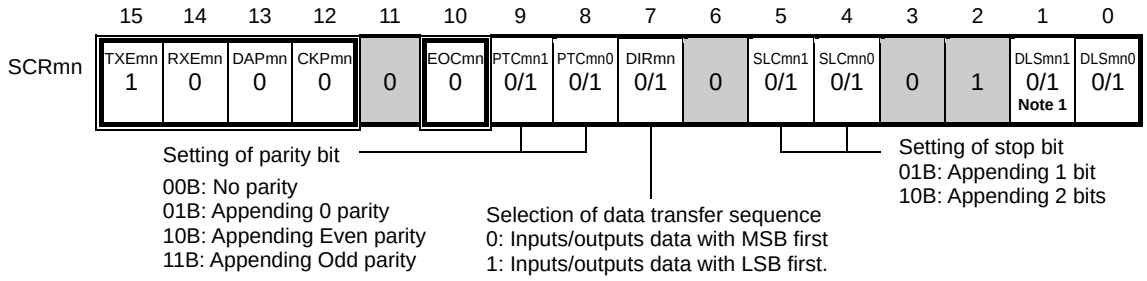

(c) Serial data register mn (SDRmn) (lower 8 bits: TXDq)

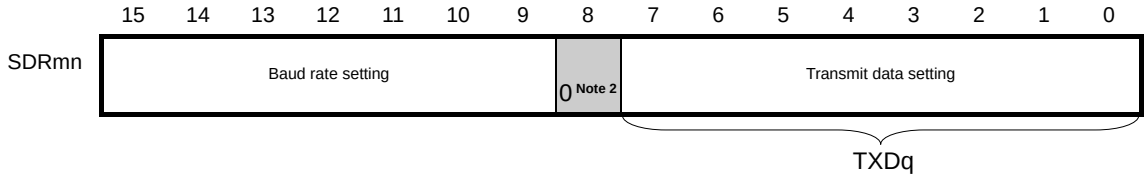

(d) Serial output level register m (SOLm) … Sets only the bits of the target channel.

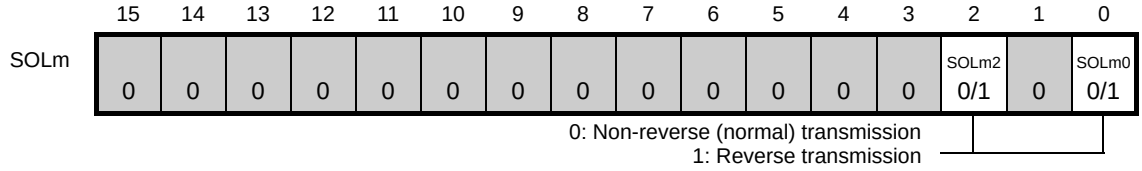

Notes 1. Only provided for the SCR00, SCR01, SCR10 and SCR11 registers. This bit is fixed to 1 for the other registers.

2. When UART0 performs 9-bit communication (by setting the DLS001 and DLS000 bits of the SCR00 register to 1), bits 0 to 8 of the SDR00 register are used as the transmission data specification area. Only UART0, UART2 can be specified for the 9-bit data length.

Remarks 1. m: Unit number (m = 0, 1), n: Channel number (n = 0, 2), q: UART number (q = 0 to 3), mn = 00, 02, 10, 12

2. ☐: Setting is fixed in the UART transmission mode, ▢: Setting disabled (set to the initial value)
×: Bit that cannot be used in this mode (set to the initial value when not used in any mode)
0/1: Set to 0 or 1 depending on the usage of the user

Figure 14-76. Example of Contents of Registers for UART Transmission of UART (UART0 to UART3) (80-pin products) (2/2)

(e) Serial output register m (SOm) … Sets only the bits of the target channel.

	15	14	13	12	11	10	9	8	7	6	5	4	3	2	1	0
SOm	0	0	0	0	1	CKOm2 Note 2 ×	1	CKOm0 Note 2 ×	0	0	0	0	1	SOm2 0/1 Note 1	1	SOm0 0/1 Note 1

0: Serial data output value is “0”
1: Serial data output value is “1”

(f) Serial output enable register m (SOEm) … Sets only the bits of the target channel to 1.

	15	14	13	12	11	10	9	8	7	6	5	4	3	2	1	0
SOEm	0	0	0	0	0	0	0	0	0	0	0	0	0	SOEm2 0/1	0	SOEm0 0/1

(g) Serial channel start register m (SSm) … Sets only the bits of the target channel to 1.

	15	14	13	12	11	10	9	8	7	6	5	4	3	2	1	0
SSm	0	0	0	0	0	0	0	0	0	0	0	0	SSm3 ×	SSm2 0/1	SSm1 ×	SSm0 0/1

Notes 1. Before transmission is started, be sure to set to 1 when the SOLmn bit of the target channel is set to 0, and set to 0 when the SOLmn bit of the target channel is set to 1. The value varies depending on the communication data during communication operation.

2. Serial array unit 0 only.

Remarks 1. m: Unit number (m = 0, 1), n: Channel number (n = 0, 2), q: UART number (q = 0 to 3)
mn = 00, 02, 10, 12

2. ▒ : Setting disabled (set to the initial value)
×: Bit that cannot be used in this mode (set to the initial value when not used in any mode)
0/1: Set to 0 or 1 depending on the usage of the user

(2) Operation procedure

Figure 14-77. Initial Setting Procedure for UART Transmission

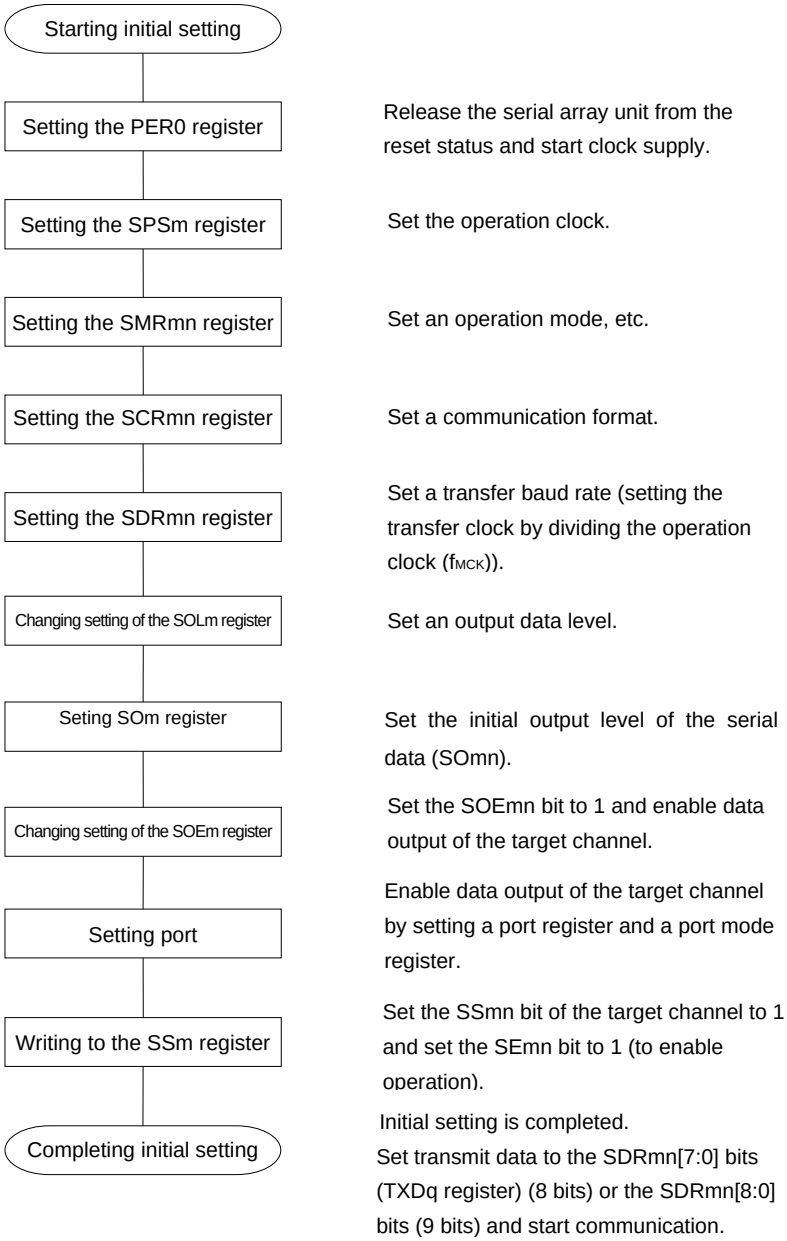

Figure 14-78. Procedure for Stopping UART Transmission

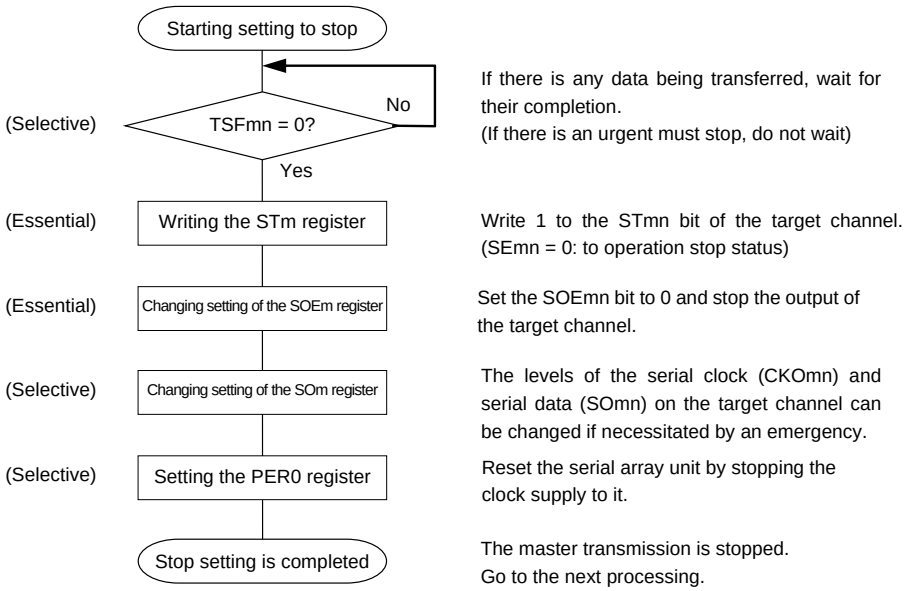

Figure 14-79. Procedure for Resuming UART Transmission

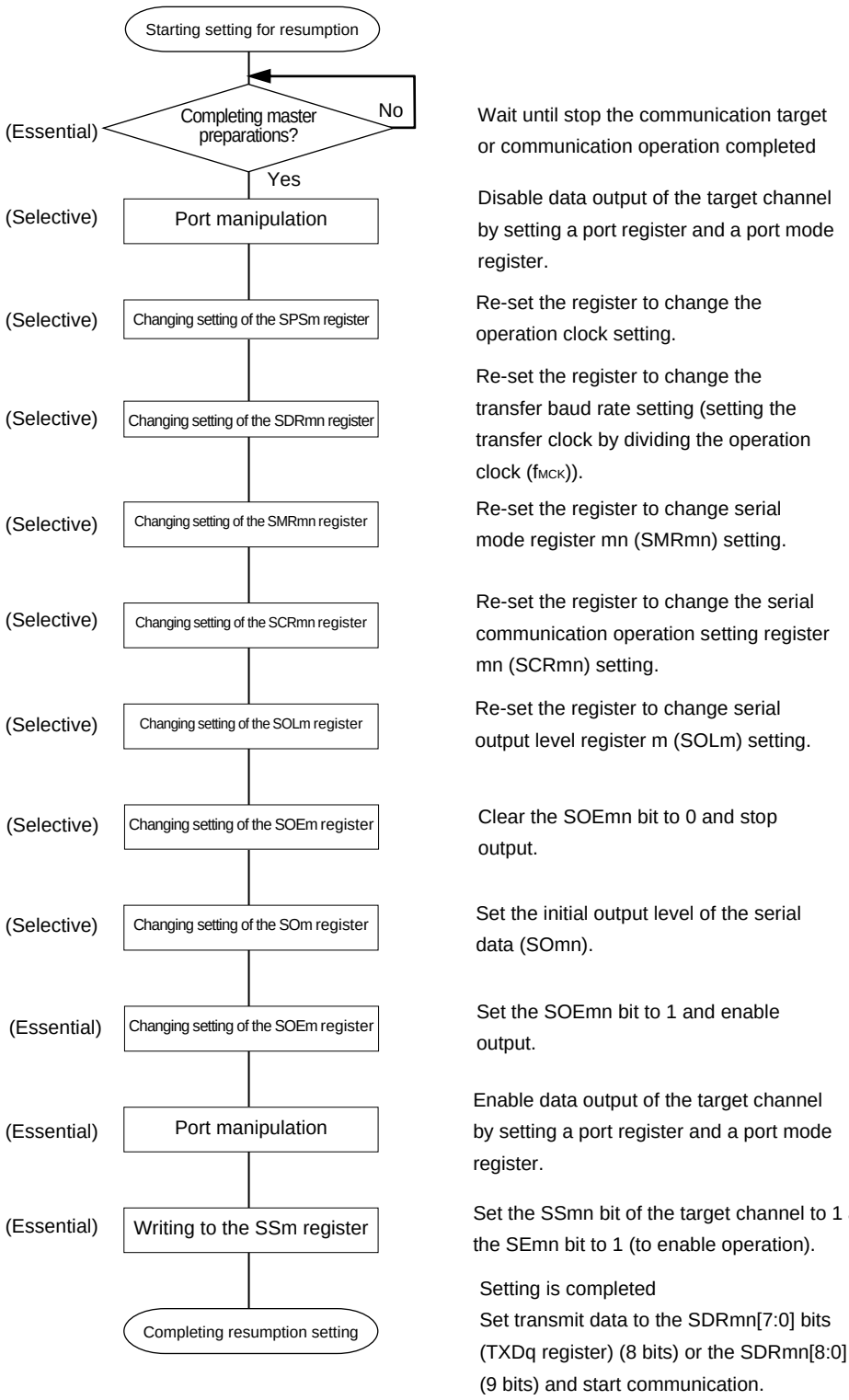

Remark If PER0 is rewritten while stopping the master transmission and the clock supply is stopped, wait until the transmission target stops or transmission finishes, and then perform initialization instead of restarting the transmission.

(3) Processing flow (in single-transmission mode)

Figure 14-80. Timing Chart of UART Transmission (in Single-Transmission Mode)

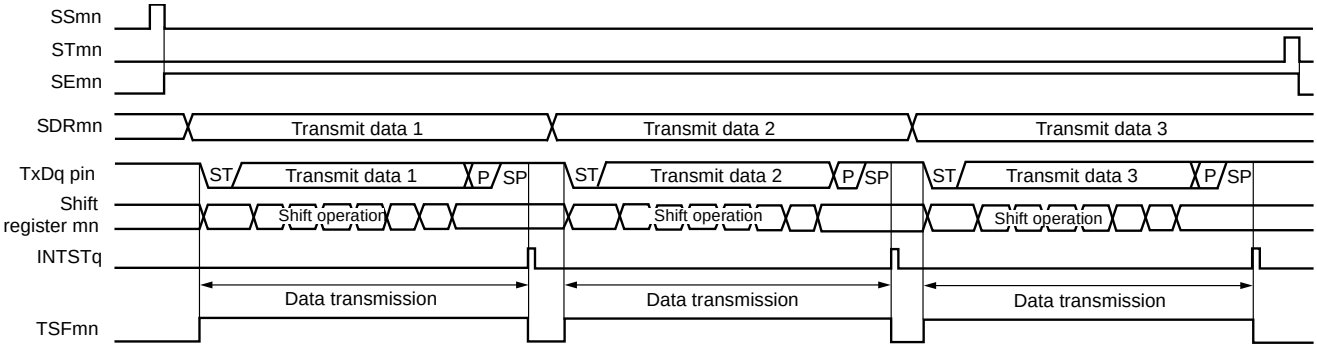

Remark m: Unit number (m = 0, 1), n: Channel number (n = 0, 2), q: UART number (q = 0 to 3)
mn = 00, 02, 10, 12

Figure 14-81. Flowchart of UART Transmission (in Single-Transmission Mode)

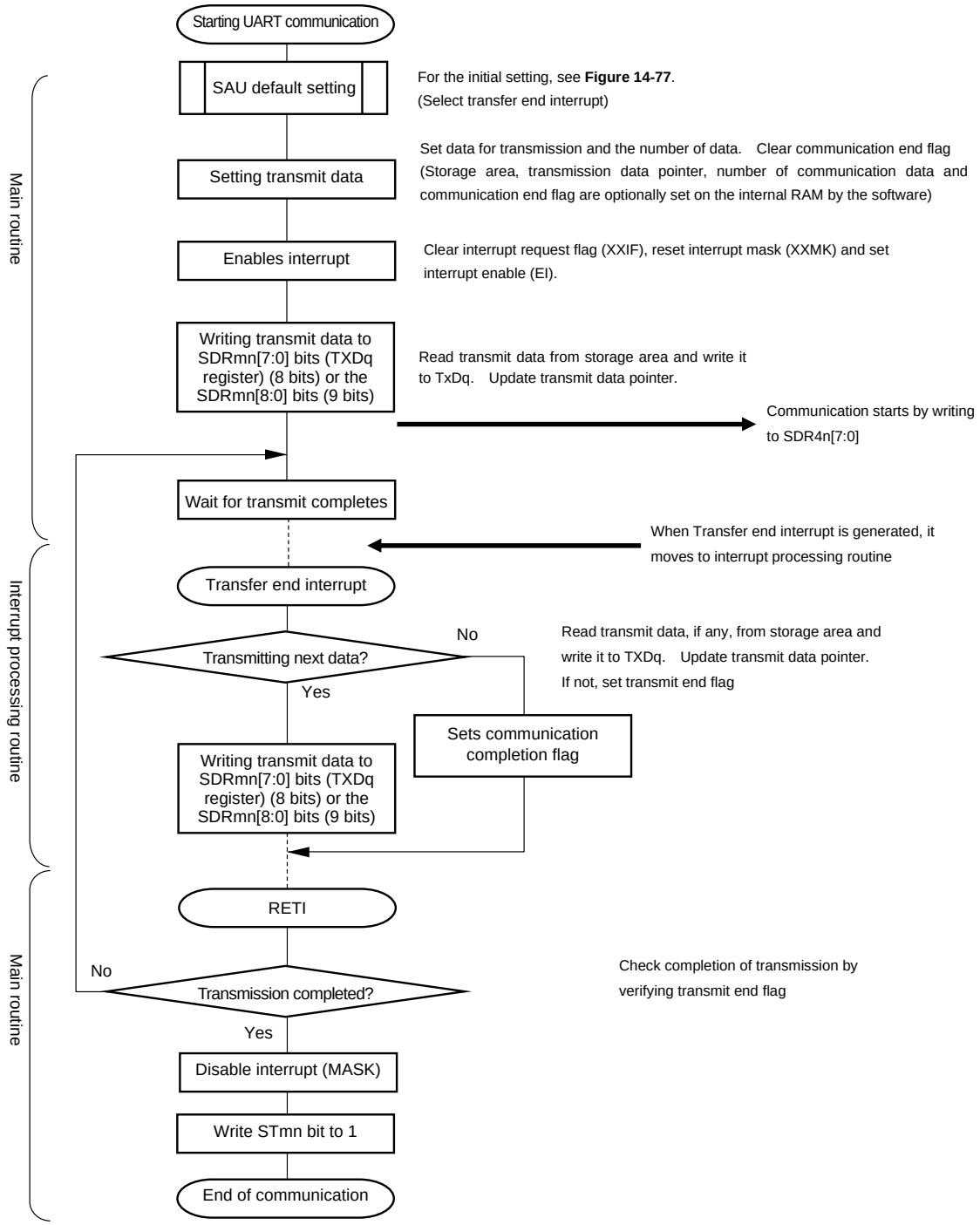

(4) Processing flow (in continuous transmission mode)

Figure 14-82. Timing Chart of UART Transmission (in Continuous Transmission Mode)

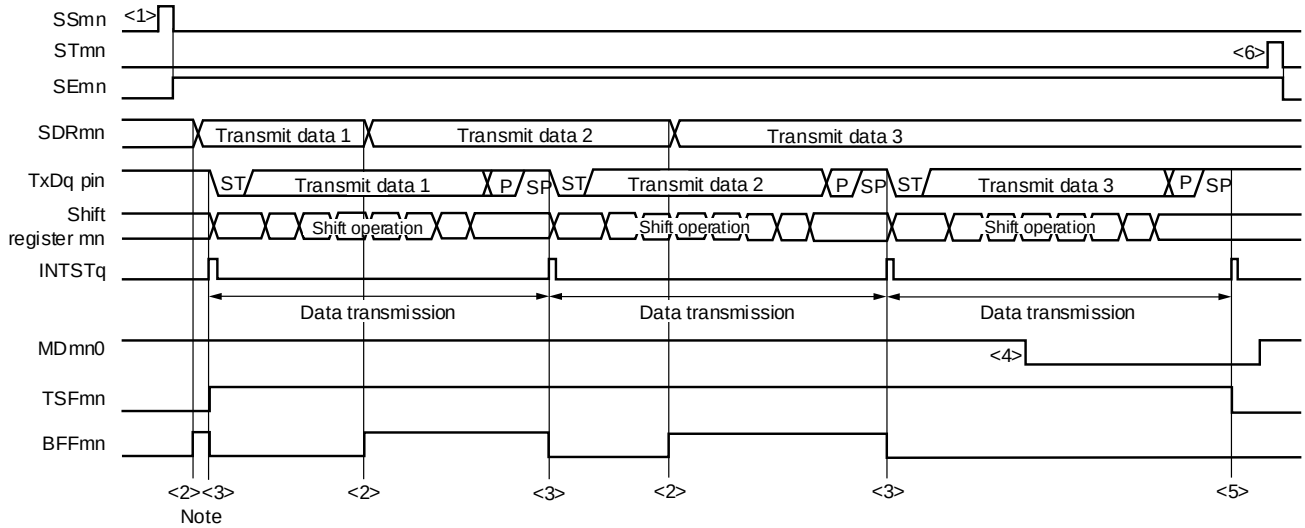

Note If transmit data is written to the SDRmn register while the BFFmn bit of serial status register mn (SSRmn) is 1 (valid data is stored in serial data register mn (SDRmn)), the transmit data is overwritten.

Caution **The MDmn0 bit of serial mode register mn (SSRmn) can be rewritten even during operation. However, rewrite it before transfer of the last bit is started, so that it will be rewritten before the transfer end interrupt of the last transmit data.**

Remark m: Unit number (m = 0, 1), n: Channel number (n = 0, 2), q: UART number (q = 0 to 3)
mn = 00, 02, 10, 12

Figure 14-83. Flowchart of UART Transmission (in Continuous Transmission Mode)

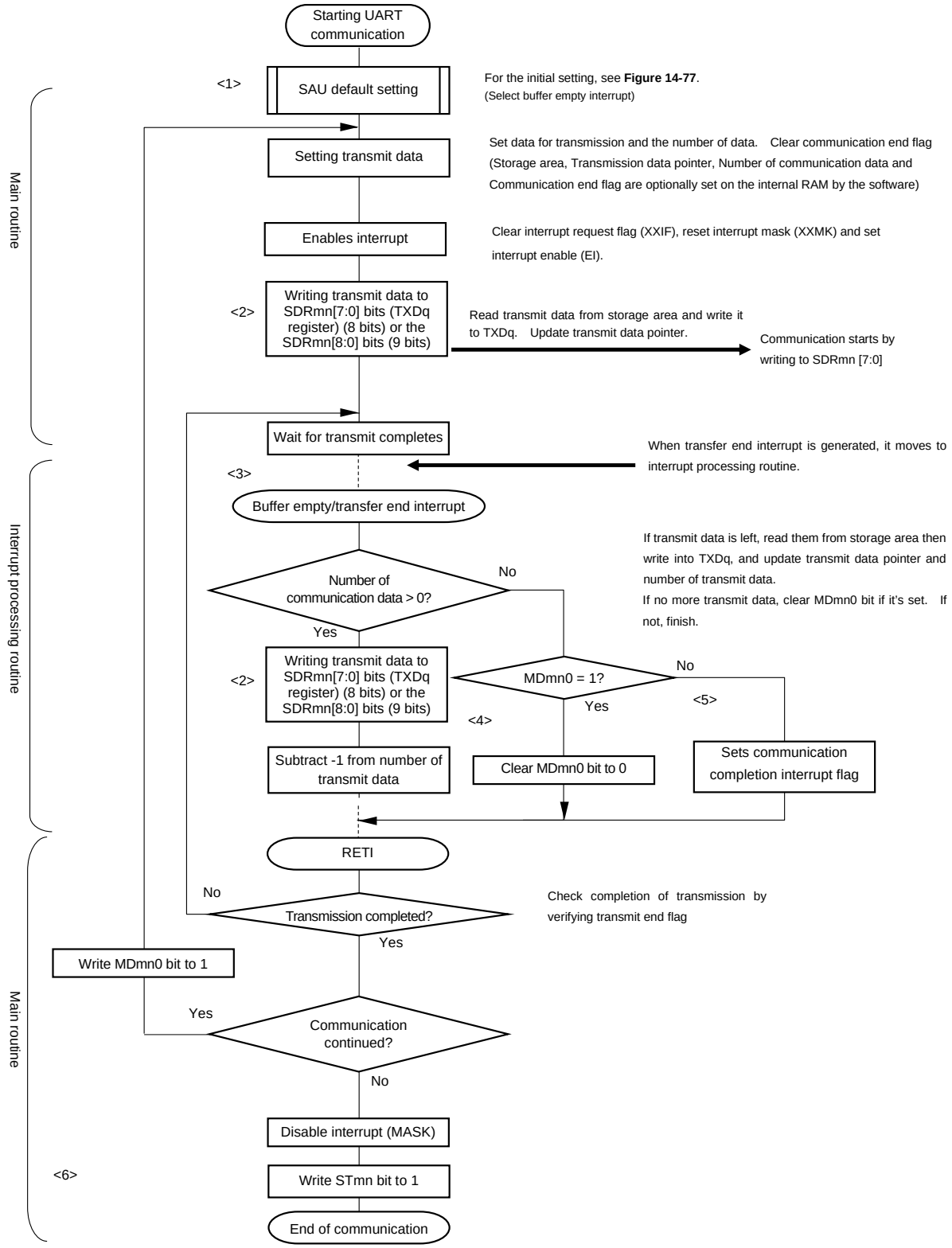

Remark <1> to <6> in the figure correspond to <1> to <6> in **Figure 14-82 Timing Chart of UART Transmission (in Continuous Transmission Mode)**.

14.6.2 UART reception

UART reception is an operation wherein the RL78 microcontroller asynchronously receives data from another device (start-stop synchronization).

For UART reception, the odd-number channel of the two channels used for UART is used. The SMR register of both the odd- and even-numbered channels must be set.

UART	UART0	UART1	UART2	UART3
Target channel	Channel 1 of SAU0	Channel 3 of SAU0	Channel 1 of SAU1	Channel 3 of SAU1
Pins used	RxD0	RxD1	RxD2	RxD3
Interrupt	INTSR0	INTSR1	INTSR2	INTSR3
	Transfer end interrupt only (Setting the buffer empty interrupt is prohibited.)			
Error interrupt	INTSRE0	INTSRE1	INTSRE2	INTSRE3
Error detection flag	● Framing error detection flag (FEFmn) ● Parity error detection flag (PEFmn) ● Overrun error detection flag (OVFmn)			
Transfer data length	7, 8 or 9 bits[Note 1]			
Transfer rate	Max. $f_{MCK}/6$ [bps] (SDRmn [15:9] = 2 or more), Min. $f_{CLK}/(2 \times 2^{15} \times 128)$ [bps][Note 2]			
Data phase	Non-reverse output (default: high level) Reverse output (default: low level)			
Parity bit	The following selectable ● No parity bit (no parity check) ● No parity judgment (0 parity) ● Even parity check ● Odd parity check			
Stop bit	Appending 1 bit			
Data direction	MSB or LSB first			

Notes 1. Only UART0, UART2 can be specified for the 8-bit data length.

2. Use this operation within a range that satisfies the conditions above and the peripheral functions characteristics in the electrical specifications (see **CHAPTER 32 ELECTRICAL SPECIFICATIONS (T_A = –40 to +85°C)** and **CHAPTER 33 ELECTRICAL SPECIFICATIONS (T_A = –40 to +105°C)**).

Remarks 1. f_{MCK}: Operation clock frequency of target channel
f_{CLK}: System clock frequency

2. m: Unit number (m = 0, 1), n: Channel number (n = 1, 3), mn = 01, 03, 11, 13

(1) Register setting

Figure 14-84. Example of Contents of Registers for UART Reception of UART (UART0 to UART3) (80-pin products) (1/2)

(a) Serial mode register mn (SMRmn)

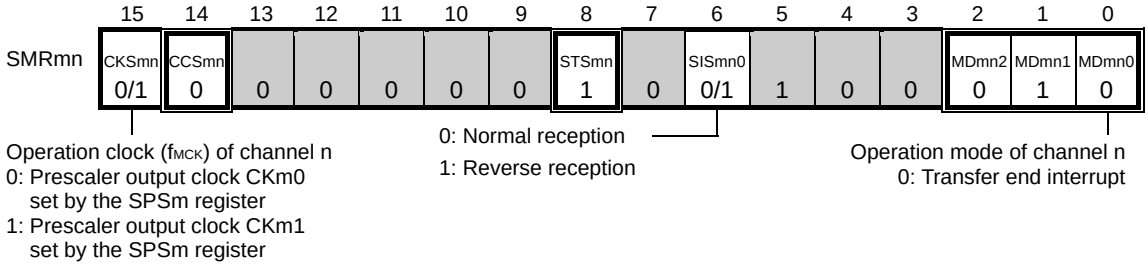

(b) Serial mode register mr (SMRmr)

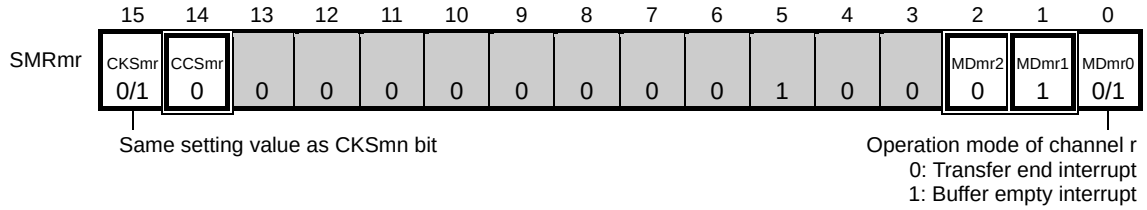

(c) Serial communication operation setting register mn (SCRmn)

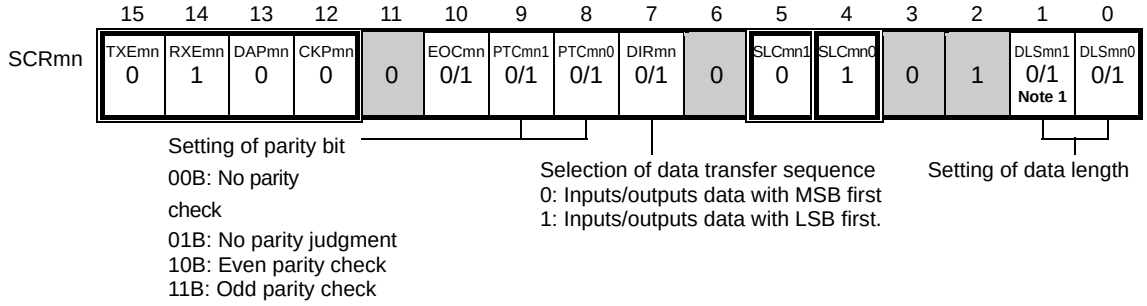

(d) Serial data register mn (SDRmn) (lower 8 bits: RXDq)

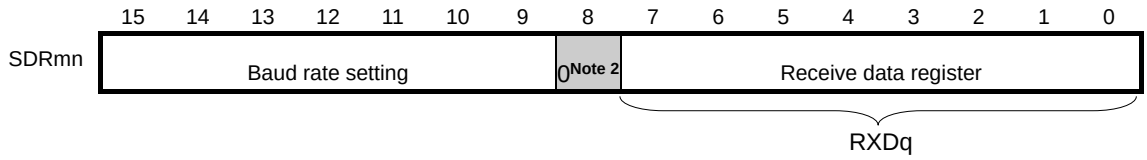

Notes 1. Only provided for the SCR00, SCR01, SCR10 and SCR11 registers. This bit is fixed to 1 for the other registers.

2. When UART performs 9-bit communication, bits 0 to 8 of the SDRm1 register are used as the reception data specification area. Only UART0, UART2 can be specified for the 8-bit data length.

Caution For the UART reception, be sure to set the SMRmr register of channel r to UART transmission mode that is to be paired with channel n.

Remarks 1. m: Unit number (m = 0, 1), n: Channel number (n = 1, 3), mn = 01, 03, 11, 13
r: Channel number (r = n – 1), q: UART number (q = 0 to 3)

2. □: Setting is fixed in the UART reception mode, ■: Setting disabled (set to the initial value)
×: Bit that cannot be used in this mode (set to the initial value when not used in any mode)
0/1: Set to 0 or 1 depending on the usage of the user

Figure 14-84. Example of Contents of Registers for UART Reception of UART (UART0 to UART3) (80-pin products) (2/2)

(e) Serial output register m (SOm) … The register that not used in this mode.

	15	14	13	12	11	10	9	8	7	6	5	4	3	2	1	0
SOm	0	0	0	0	1	CKOm2 Note ×	1	CKOm0 Note ×	0	0	0	0	1	SOm2 ×	1	SOm0 ×

(f) Serial output enable register m (SOEm) …The register that not used in this mode.

	15	14	13	12	11	10	9	8	7	6	5	4	3	2	1	0
SOEm	0	0	0	0	0	0	0	0	0	0	0	0	0	SOEm2 ×	0	SOEm0 ×

(g) Serial channel start register m (SSm) … Sets only the bits of the target channel is 1.

	15	14	13	12	11	10	9	8	7	6	5	4	3	2	1	0
SSm	0	0	0	0	0	0	0	0	0	0	0	0	SSm3 0/1	SSm2 ×	SSm1 0/1	SSm0 ×

Note Serial array unit 0 only.

Caution For the UART reception, be sure to set the SMRmr register of channel r to UART Transmission mode that is to be paired with channel n.

Remarks 1. m: Unit number (m = 0, 1), n: Channel number (n = 1, 3), mn = 01, 03, 11, 13
r: Channel number (r = n – 1), q: UART number (q = 0 to 3)

2. ☐: Setting is fixed in the UART reception mode, ▒ : Setting disabled (set to the initial value)
×: Bit that cannot be used in this mode (set to the initial value when not used in any mode)
0/1: Set to 0 or 1 depending on the usage of the user

(2) Operation procedure

Figure 14-85. Initial Setting Procedure for UART Reception

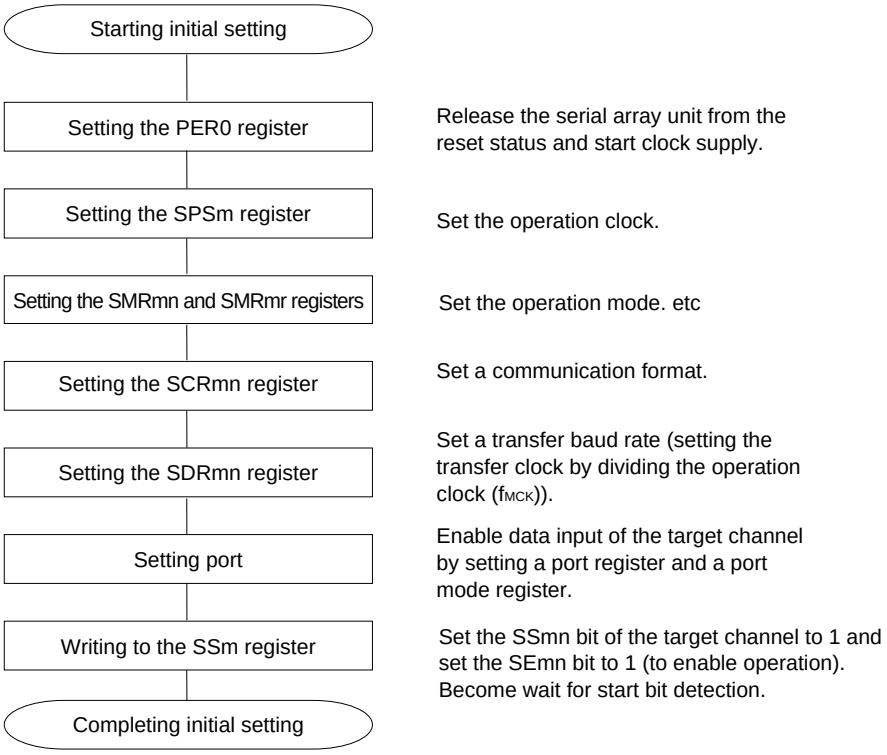

Caution Set the RXEmn bit of SCRmn register to 1, and then be sure to set SSmn to 1 after 4 or more f_{MCK} clocks have elapsed.

Figure 14-86. Procedure for Stopping UART Reception

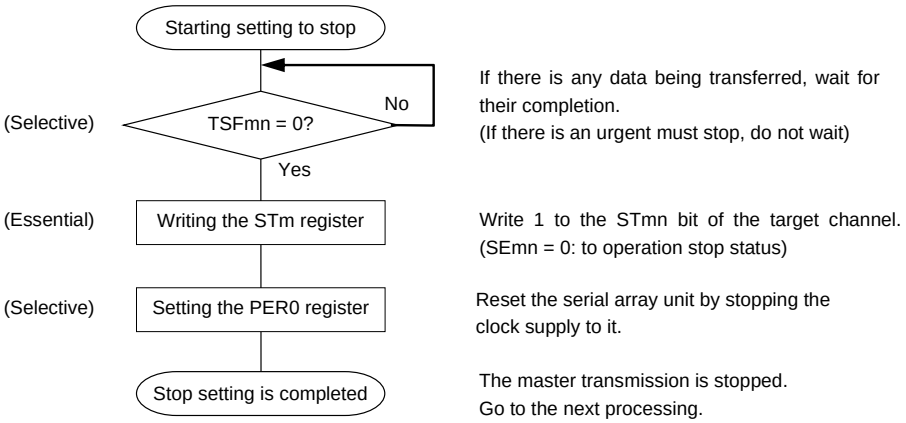

Figure 14-87. Procedure for Resuming UART Reception

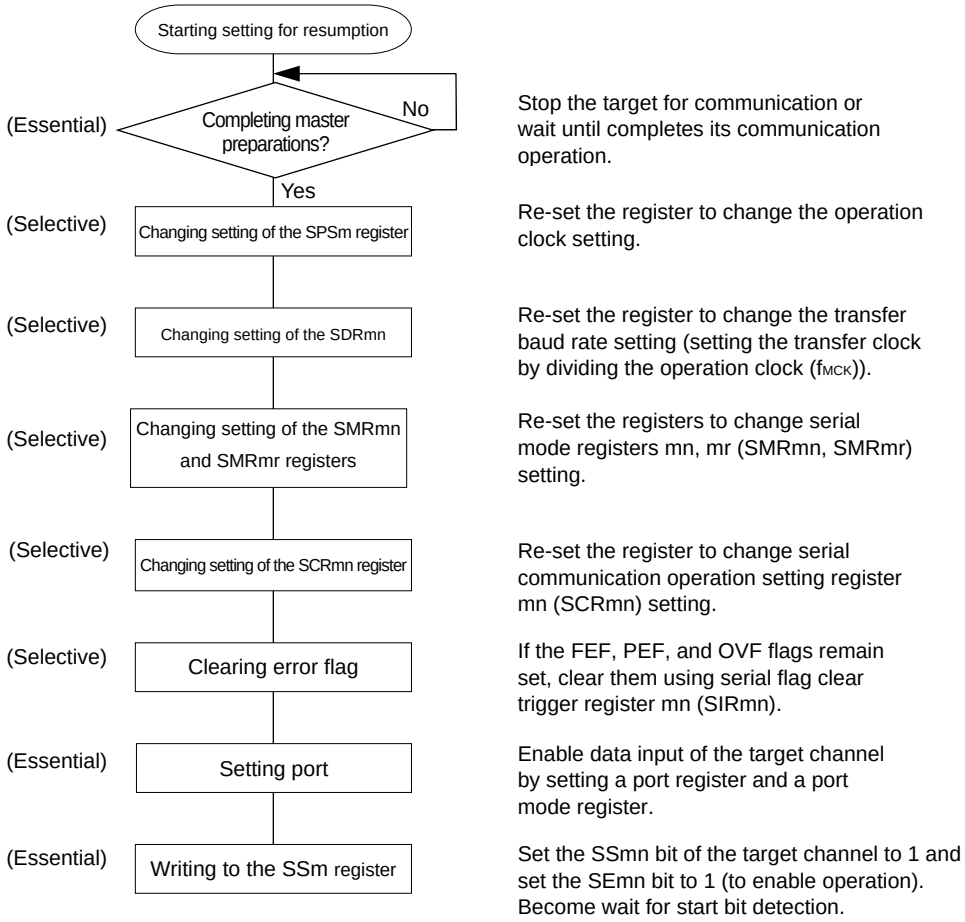

Caution After is set RXEmn bit to 1 of SCRmn register, set the SSmn = 1 from an interval of at least four clocks of f_{MCK}.

Remark If PER0 is rewritten while stopping the master transmission and the clock supply is stopped, wait until the transmission target (slave) stops or transmission finishes, and then perform initialization instead of restarting the transmission.

(3) Processing flow

Figure 14-88. Timing Chart of UART Reception

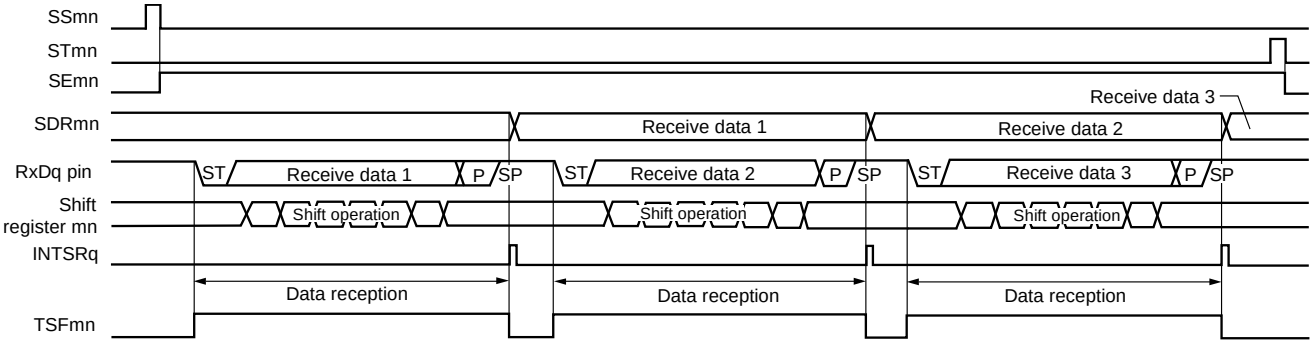

Remark m: Unit number (m = 0, 1), n: Channel number (n = 1, 3), mn = 01, 03, 11, 13
r: Channel number (r = n – 1), q: UART number (q = 0 to 3)

Figure 14-89. Flowchart of UART Reception

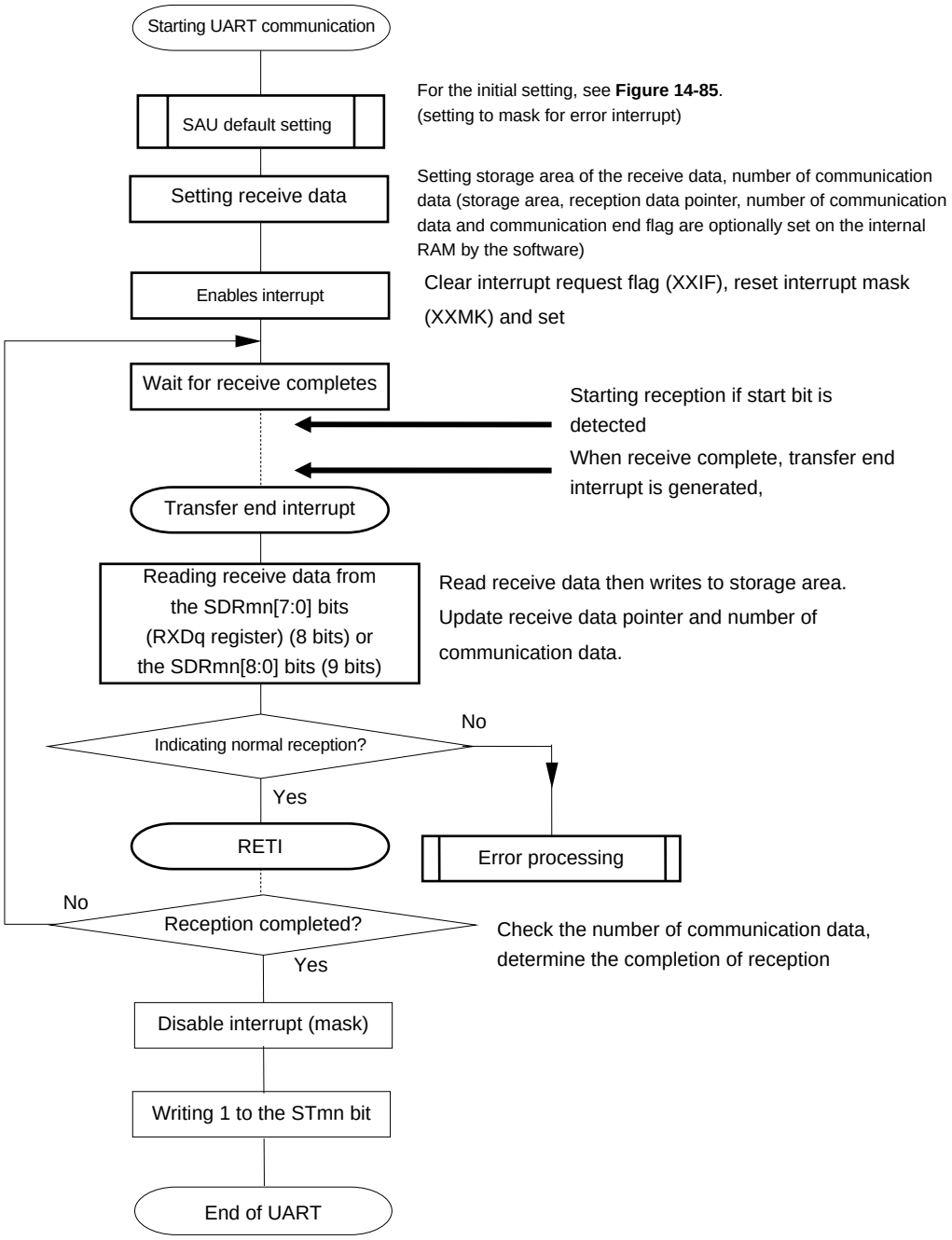

14.6.3 SNOOZE mode function

SNOOZE mode makes UART operate reception by RxDq pin input detection while the STOP mode. Normally the UART stops communication in the STOP mode. However, using the SNOOZE mode enables the UART to perform reception operations without CPU operation. Only UART0 and UART2 can be set to the SNOOZE mode.

When using UARTq in the SNOOZE mode, make the following settings before entering the STOP mode. (See **Figure 14-92 Flowchart of SNOOZE Mode Operation (EOCm1 = 0, SSECm = 0/1 or EOCm1 = 1, SSECm = 0)** and **Figure 14-94 Flowchart of SNOOZE Mode Operation (EOCm1 = 1, SSECm = 1)**.)

- In the SNOOZE mode, the baud rate setting for UART reception needs to be changed to a value different from that in normal operation. Set the SPSm register and bits 15 to 9 of the SDRmn register with reference to Table 14-3.
- Set the EOCmn and SSECmn bits. This is for enabling or stopping generation of an error interrupt (INTSRE0) when a communication error occurs.
- When using the SNOOZE mode function, set the SWCm bit of serial standby control register m (SSCm) to 1 just before switching to the STOP mode. After the initial setting has completed, set the SSm0 bit of serial channel start register m (SSm) to 1.
- A UARTq starts reception in SNOOZE mode on detecting input of the start bit on the RxDq pin following a transition of the CPU to the STOP mode.

Cautions 1. The SNOOZE mode can only be specified when the high-speed on-chip oscillator clock (f_{IH}) is selected for f_{CLK}.

2. The transfer rate in the SNOOZE mode is only 4800 bps.

3. When SWCm = 1, UARTq can be used only when the reception operation is started in the STOP mode. When used simultaneously with another SNOOZE mode function or interrupt, if the reception operation is started in a state other than the STOP mode, such as those given below, data may not be received correctly and a framing error or parity error may be generated.

- **When after the SWCm bit has been set to 1, the reception operation is started before the STOP mode is entered**
- **When the reception operation is started while another function is in the SNOOZE mode**
- **When after returning from the STOP mode to normal operation due to an interrupt or other cause, the reception operation is started before the SWCm bit is returned to 0**

4. If a parity error, framing error, or overrun error occurs while the SSECm bit is set to 1, the PEFmn, FEFmn, or OVFmn flag is not set and an error interrupt (INTSREq) is not generated. Therefore, when the setting of SSECm = 1 is made, clear the PEFmn, FEFmn, or OVFmn flag before setting the SWC0 bit to 1 and read the value in bits 7 to 0 (RXDq register) of the SDRm1 register.

5. The CPU shifts from the STOP mode to the SNOOZE mode on detecting the valid edge of the RxDq signal. Note, however, that transfer through the UART channel may not start and the CPU may remain in the SNOOZE mode if an input pulse on the RxDq pin is too short to be detected as a start bit. In such cases, data may not be received correctly, and this may lead to a framing error or parity error in the next UART transfer.

Table 14-3. Baud Rate Setting for UART Reception in SNOOZE Mode

High-speed On-chip Oscillator (f_{IH})	Baud Rate for UART Reception in SNOOZE Mode			
	Baud Rate of 4800 bps			
	Operation Clock (f_{MCK})	SDRmn[15:9]	Maximum Permissible Value	Minimum Permissible Value
24 MHz ± 1.0%[Note]	$f_{CLK}/2^5$	79	1.60%	–2.18%
16 MHz ± 1.0%[Note]	$f_{CLK}/2^4$	105	2.27%	–1.53%
12 MHz ± 1.0%[Note]	$f_{CLK}/2^4$	79	1.60%	–2.19%
8 MHz ± 1.0%[Note]	$f_{CLK}/2^3$	105	2.27%	–1.53%
6 MHz ± 1.0%[Note]	$f_{CLK}/2^3$	79	1.60%	–2.19%
4 MHz ± 1.0%[Note]	$f_{CLK}/2^2$	105	2.27%	–1.53%
3 MHz ± 1.0%[Note]	$f_{CLK}/2^2$	79	1.60%	–2.19%
2 MHz ± 1.0%[Note]	$f_{CLK}/2$	105	2.27%	–1.54%
1 MHz ± 1.0%[Note]	f_{CLK}	105	2.27%	–1.57%

Note When the accuracy of the clock frequency of the high-speed on-chip oscillator is ±1.5% or ±2.0%, the permissible range becomes smaller as shown below.

- In the case of f_{IH} ± 1.5%, perform (Maximum permissible value – 0.5%) and (Minimum permissible value + 0.5%) to the values in the above table.
- In the case of f_{IH} ± 2.0%, perform (Maximum permissible value – 1.0%) and (Minimum permissible value + 1.0%) to the values in the above table.

Remark The maximum permissible value and minimum permissible value are permissible values for the baud rate in UART reception.
The baud rate on the transmitting side should be set to fall inside this range.

(1) SNOOZE mode operation (EOCm1 = 0, SSECm = 0/1)

Because of the setting of EOCm1 = 0, even though a communication error occurs, an error interrupt (INTSREq) is not generated, regardless of the setting of the SSECm bit. A transfer end interrupt (INTSRq) will be generated.

Figure 14-90. Timing Chart of SNOOZE Mode Operation (EOCm1 = 0, SSECm = 0/1)

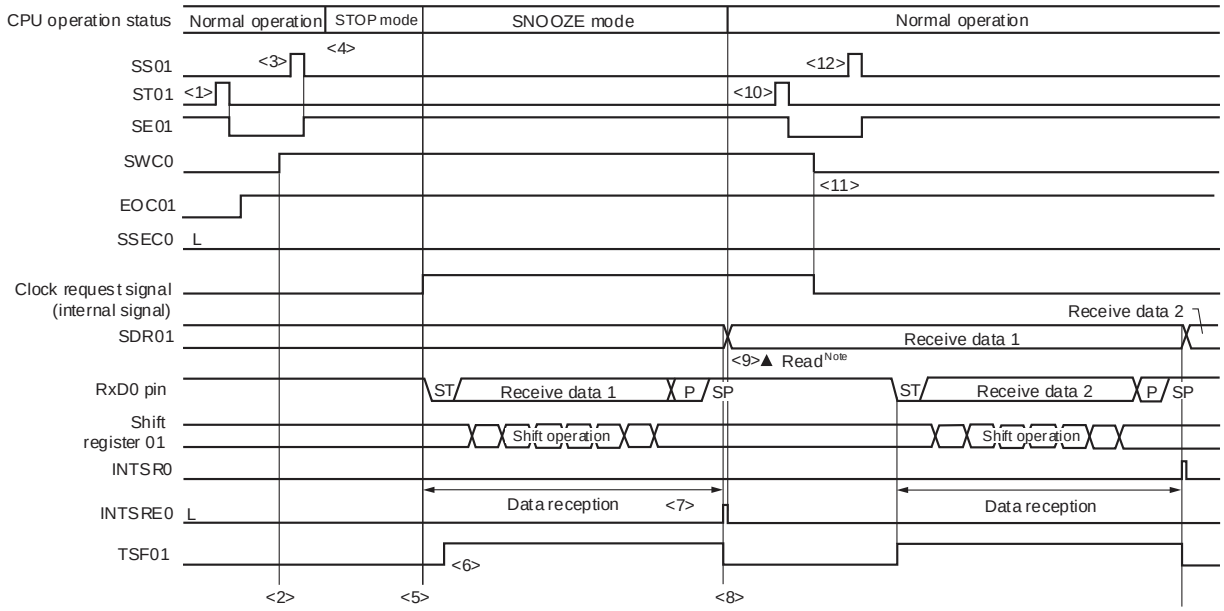

Note Read the received data when SWCm is 1

Caution Before switching to the SNOOZE mode or after reception operation in the SNOOZE mode finishes, set the STm1 bit to 1 (clear the SEm1 bit, and stop the operation).
And after completion the receive operation, also clearing SWCm bit to 0 (SNOOZE mode release).

Remarks 1. <1> to <12> in the figure correspond to <1> to <12> in **Figure 14-92 Flowchart of SNOOZE Mode Operation (EOCm1 = 0, SSECm = 0/1 or EOCm1 = 1, SSECm = 0)**..

2. m = 0, 1; q = 0, 2

(2) SNOOZE mode operation (EOCm1 = 1, SSECm = 0: Error interrupt (INTSREq) generation is enabled)

Because EOCm1 = 1 and SSECm = 0, an error interrupt (INTSREq) is generated when a communication error occurs.

Figure 14-91. Timing Chart of SNOOZE Mode Operation (EOCm1 = 1, SSECm = 0)

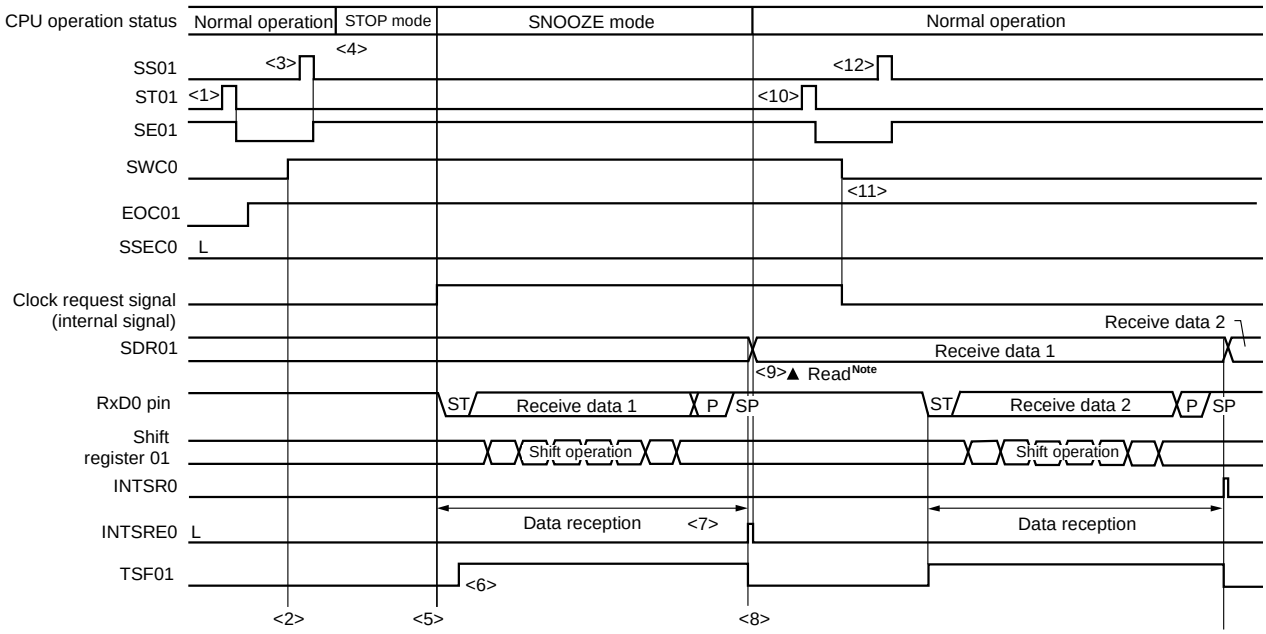

Note Read the received data when SWCm = 1.

Caution Before switching to the SNOOZE mode or after reception operation in the SNOOZE mode finishes, set the STm1 bit to 1 (clear the SEm1 bit, and stop the operation).
And after completion the receive operation, also clearing SWCm bit to 0 (SNOOZE mode release).

Remarks 1. <1> to <12> in the figure correspond to <1> to <12> in **Figure 14-92 Flowchart of SNOOZE Mode Operation (EOCm1 = 0, SSECm = 0/1 or EOCm1 = 1, SSECm = 0)**.

2. m = 0, 1; q = 0, 2

Figure 14-92. Flowchart of SNOOZE Mode Operation (EOCm1 = 0, SSECm = 0/1 or EOCm1 = 1, SSECm = 0)

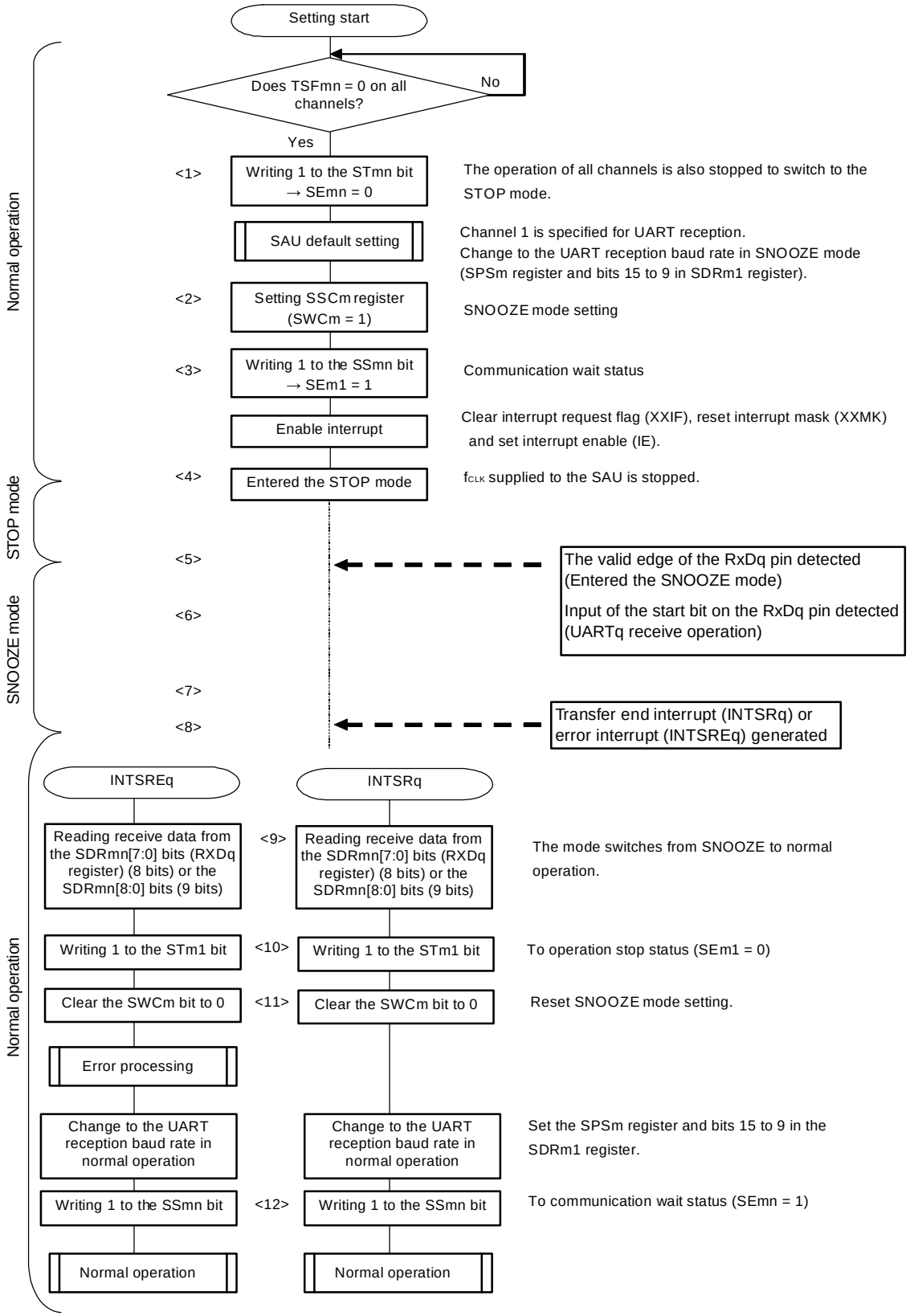

Remarks 1. <1> to <12> in the figure correspond to <1> to <12> in **Figure 14-90 Timing Chart of SNOOZE Mode Operation (EOCm1 = 0, SSECm = 0/1)** and **Figure 14-91 Timing Chart of SNOOZE Mode Operation (EOCm1 = 1, SSECm = 0)**.

2. m = 0, 1; q = 0, 2

(3) SNOOZE mode operation (EOCm1 = 1, SSECm = 1: Error interrupt (INTSREq) generation is stopped)

Because EOCm1 = 1 and SSECm = 1, an error interrupt (INTSREq) is not generated when a communication error occurs.

Figure 14-93. Timing Chart of SNOOZE Mode Operation (EOCm1 = 1, SSECm = 1)

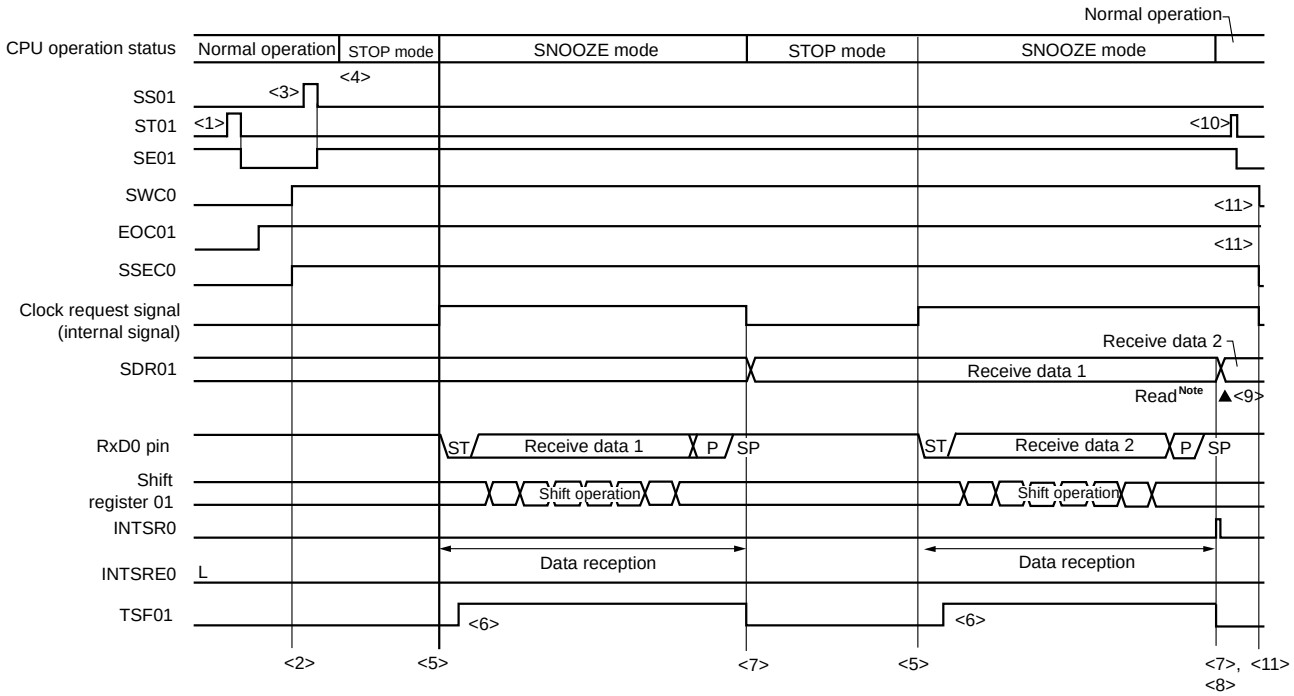

Note Read the received data when SWCm = 1.

Cautions 1. Before switching to the SNOOZE mode or after reception operation in the SNOOZE mode finishes, set the STm1 bit to 1 (clear the SEm1 bit, and stop the operation).
And after completion the receive operation, also clearing SWCm bit to 0 (SNOOZE mode release).

2. If a parity error, framing error, or overrun error occurs while the SSECm bit is set to 1, the PEFm1, FEFm1, or OVFm1 flag is not set and an error interrupt (INTSREq) is not generated. Therefore, when the setting of SSECm = 1 is made, clear the PEFm1, FEFm1, or OVFm1 flag before setting the SWCm bit to 1 and read the value in SDRm1[7:0] (RxDq register) (8 bits) or SDRm1[8:0] (9 bits).

Remarks 1. <1> to <11> in the figure correspond to <1> to <11> in **Figure 14-94 Flowchart of SNOOZE Mode Operation (EOCm1 = 1, SSECm = 1)**.

2. m = 0, 1; q = 0, 2

Figure 14-94. Flowchart of SNOOZE Mode Operation (EOCm1 = 1, SSECm = 1)

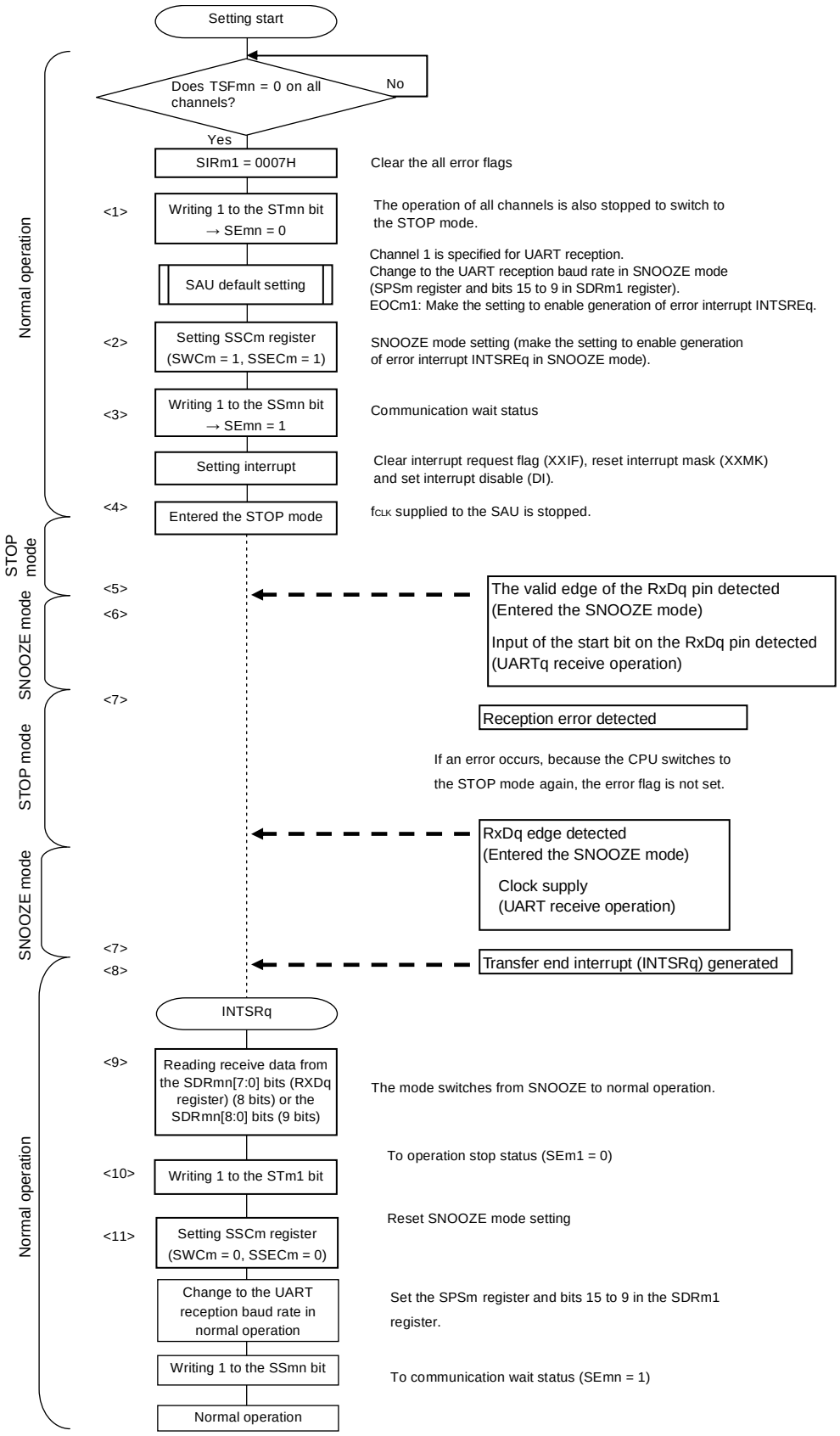

(**Caution** and **Remarks** are listed on the next page.)

Caution If a parity error, framing error, or overrun error occurs while the SSECm bit is set to 1, the PEFm1, FEFm1, or OVFm1 flag is not set and an error interrupt (INTSREq) is not generated. Therefore, when the setting of SSECm = 1 is made, clear the PEFm1, FEFm1, or OVFm1 flag before setting the SWCm bit to 1 and read the value in SDRm1[7:0] (RxDq register) (8 bits) or SDRm1[8:0] (9 bits).

Remarks 1. <1> to <11> in the figure correspond to <1> to <11> in **Figure 14-93 Timing Chart of SNOOZE Mode Operation (EOCm1 = 1, SSECm = 1)**.

2. m = 0, 1; q = 0, 2

14.6.4 Calculating baud rate

(1) Baud rate calculation expression

The baud rate for UART (UART0 to UART3) communication can be calculated by the following expressions.

(Baud rate) = {Operation clock (f_{MCK}) frequency of target channel} ÷ (SDRmn[15:9] + 1) ÷ 2 [bps]

Caution Setting serial data register mn (SDRmn) SDRmn[15:9] = (0000000B, 0000001B) is prohibited.

Remarks 1. When UART is used, the value of SDRmn[15:9] is the value of bits 15 to 9 of the SDRmn register (0000010B to 1111111B) and therefore is 2 to 127.

2. m: Unit number (m = 0, 1), n: Channel number (n = 0 to 3), mn = 00 to 03, 10 to 13

The operation clock (f_{MCK}) is determined by serial clock select register m (SPSm) and bit 15 (CKSmn) of serial mode register mn (SMRmn).

Table 14-4. Selection of Operation Clock For UART

SMRmn Register	SPSm Register								Operation Clock (f_{MCK})[Note]	
CKSmn	PRS m13	PRS m12	PRS m11	PRS m10	PRS m03	PRS m02	PRS m01	PRS m00		f_{CLK} = 24 MHz
0	X	X	X	X	0	0	0	0	f_{CLK}	24 MHz
	X	X	X	X	0	0	0	1	$f_{CLK}/2$	12 MHz
	X	X	X	X	0	0	1	0	$f_{CLK}/2^2$	6 MHz
	X	X	X	X	0	0	1	1	$f_{CLK}/2^3$	3 MHz
	X	X	X	X	0	1	0	0	$f_{CLK}/2^4$	1.5 MHz
	X	X	X	X	0	1	0	1	$f_{CLK}/2^5$	750 kHz
	X	X	X	X	0	1	1	0	$f_{CLK}/2^6$	375 kHz
	X	X	X	X	0	1	1	1	$f_{CLK}/2^7$	187.5 kHz
	X	X	X	X	1	0	0	0	$f_{CLK}/2^8$	93.8 kHz
	X	X	X	X	1	0	0	1	$f_{CLK}/2^9$	46.9 kHz
	X	X	X	X	1	0	1	0	$f_{CLK}/2^{10}$	23.4 kHz
	X	X	X	X	1	0	1	1	$f_{CLK}/2^{11}$	11.7 kHz
	X	X	X	X	1	1	0	0	$f_{CLK}/2^{12}$	5.86 kHz
	X	X	X	X	1	1	0	1	$f_{CLK}/2^{13}$	2.93 kHz
	X	X	X	X	1	1	1	0	$f_{CLK}/2^{14}$	1.46 kHz
	X	X	X	X	1	1	1	1	$f_{CLK}/2^{15}$	732 Hz
1	0	0	0	0	X	X	X	X	f_{CLK}	24 MHz
	0	0	0	1	X	X	X	X	$f_{CLK}/2$	12 MHz
	0	0	1	0	X	X	X	X	$f_{CLK}/2^2$	6 MHz
	0	0	1	1	X	X	X	X	$f_{CLK}/2^3$	3 MHz
	0	1	0	0	X	X	X	X	$f_{CLK}/2^4$	1.5 MHz
	0	1	0	1	X	X	X	X	$f_{CLK}/2^5$	750 kHz
	0	1	1	0	X	X	X	X	$f_{CLK}/2^6$	375 kHz
	0	1	1	1	X	X	X	X	$f_{CLK}/2^7$	187.5 kHz
	1	0	0	0	X	X	X	X	$f_{CLK}/2^8$	93.8 kHz
	1	0	0	1	X	X	X	X	$f_{CLK}/2^9$	46.9 kHz
	1	0	1	0	X	X	X	X	$f_{CLK}/2^{10}$	23.4 kHz
	1	0	1	1	X	X	X	X	$f_{CLK}/2^{11}$	11.7 kHz
	1	1	0	0	X	X	X	X	$f_{CLK}/2^{12}$	5.86 kHz
	1	1	0	1	X	X	X	X	$f_{CLK}/2^{13}$	2.93 kHz
	1	1	1	0	X	X	X	X	$f_{CLK}/2^{14}$	1.46 kHz
	1	1	1	1	X	X	X	X	$f_{CLK}/2^{15}$	732 Hz

Note When changing the clock selected for f_{CLK} (by changing the system clock control register (CKC) value), do so after having stopped (serial channel stop register m (STm) = 000FH) the operation of the serial array unit (SAU).

Remarks 1. X: Don't care

2. m: Unit number (m = 0, 1), n: Channel number (n = 0 to 3), mn = 00 to 03, 10 to 13

(2) Baud rate error during transmission

The baud rate error of UART (UART0 to UART3) communication during transmission can be calculated by the following expression. Make sure that the baud rate at the transmission side is within the permissible baud rate range at the reception side.

(Baud rate error) = (Calculated baud rate value) ÷ (Target baud rate) × 100 – 100 [%]

Here is an example of setting a UART baud rate at f_{CLK} = 24 MHz.

UART Baud Rate (Target Baud Rate)	f_{CLK} = 24 MHz			
	Operation Clock (f_{MCK})	SDRmn[15:9]	Calculated Baud Rate	Error from Target Baud Rate
300 bps	$f_{CLK}/2^9$	77	300.48 bps	+0.16 %
600 bps	$f_{CLK}/2^8$	77	600.96 bps	+0.16 %
1200 bps	$f_{CLK}/2^7$	77	1201.92 bps	+0.16 %
2400 bps	$f_{CLK}/2^6$	77	2403.85 bps	+0.16 %
4800 bps	$f_{CLK}/2^5$	77	4807.69 bps	+0.16 %
9600 bps	$f_{CLK}/2^4$	77	9615.38 bps	+0.16 %
19200 bps	$f_{CLK}/2^3$	77	19230.8 bps	+0.16 %
31250 bps	$f_{CLK}/2^3$	47	31250.0 bps	±0.0 %
38400 bps	$f_{CLK}/2^2$	77	38461.5 bps	+0.16 %
76800 bps	$f_{CLK}/2$	77	76923.1 bps	+0.16 %
153600 bps	f_{CLK}	77	153846 bps	+0.16 %
312500 bps	f_{CLK}	37	315789 bps	+1.05 %

Remark m: Unit number (m = 0, 1), n: Channel number (n = 0, 2), mn = 00, 02, 10, 12

(3) Permissible baud rate range for reception

The permissible baud rate range for reception during UART (UART0 to UART3) communication can be calculated by the following expression. Make sure that the baud rate at the transmission side is within the permissible baud rate range at the reception side.

$$\text{(Maximum receivable baud rate)} = \frac{2 \times k \times Nfr}{2 \times k \times Nfr - k + 2} \times Brate$$

$$\text{(Minimum receivable baud rate)} = \frac{2 \times k \times (Nfr - 1)}{2 \times k \times Nfr - k - 2} \times Brate$$

Brate: Calculated baud rate value at the reception side (See **14.6.4 (1) Baud rate calculation expression**.)

k: SDRmn[15:9] + 1

Nfr: 1 data frame length [bits]

= (Start bit) + (Data length) + (Parity bit) + (Stop bit)

Remark m: Unit number (m = 0, 1), n: Channel number (n = 1, 3), mn = 01, 03, 11, 13

Figure 14-95. Permissible Baud Rate Range for Reception (1 Data Frame Length = 11 Bits)

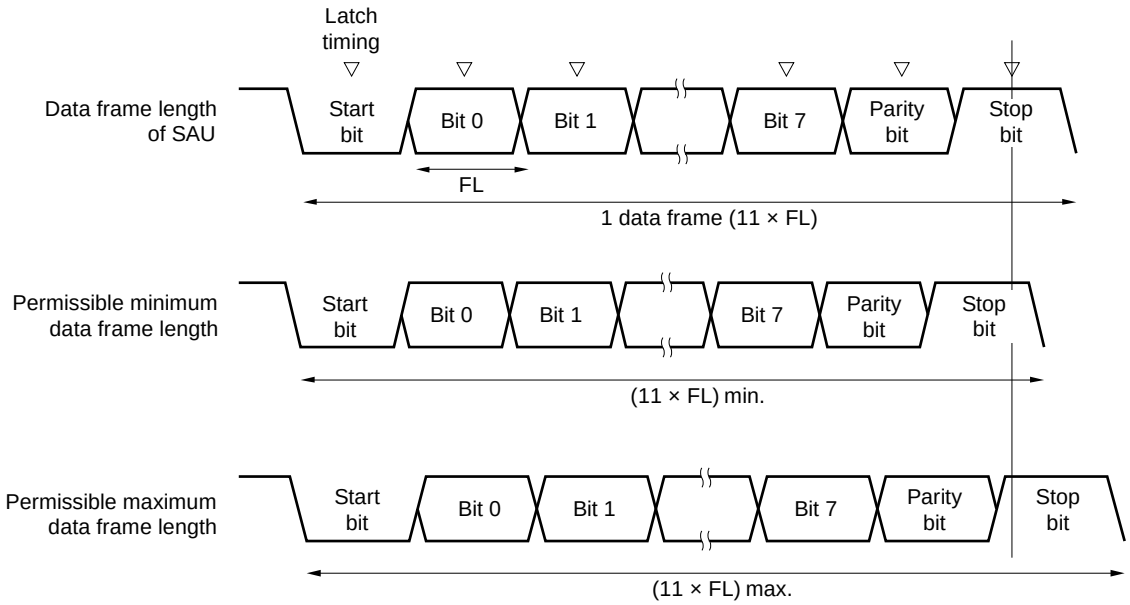

As shown in Figure 14-95, the timing of latching receive data is determined by the division ratio set by bits 15 to 9 of serial data register mn (SDRmn) after the start bit is detected. If the last data (stop bit) is received before this latch timing, the data can be correctly received.

14.6.5 Procedure for processing errors that occurred during UART (UART0 to UART3) communication

The procedure for processing errors that occurred during UART (UART0 to UART3) communication is described in Figures 14-96 and 14-97.

Figure 14-96. Processing Procedure in Case of Parity Error or Overrun Error

Software manipulation	Hardware status	Remark
Reads serial data register mn (SDRmn). →	The BFFmn bit of the SSRmn register is set to 0 and channel n is enabled to receive data.	This is to prevent an overrun error if the next reception is completed during error processing.
Reads serial status register mn (SSRmn).		Error type is identified and the read value is used to clear error flag.
Writes 1 to serial flag clear trigger register mn (SIRmn). →	Error flag is cleared.	Error can be cleared only during reading, by writing the value read from the SSRmn register to the SIRmn register without modification.

Figure 14-97. Processing Procedure in Case of Framing Error

Software manipulation	Hardware status	Remark
Reads serial data register mn (SDRmn). →	The BFFmn bit of the SSRmn register is set to 0 and channel n is enabled to receive data.	This is to prevent an overrun error if the next reception is completed during error processing.
Reads serial status register mn (SSRmn).		Error type is identified and the read value is used to clear error flag.
Writes serial flag clear trigger register mn (SIRmn). →	Error flag is cleared.	Error can be cleared only during reading, by writing the value read from the SSRmn register to the SIRmn register without modification.
Sets the STmn bit of serial channel stop register m (STm) to 1. →	The SEmn bit of serial channel enable status register m (SEm) is set to 0 and channel n stops operating.	
Synchronization with other party of communication		Synchronization with the other party of communication is re-established and communication is resumed because it is considered that a framing error has occurred because the start bit has been shifted.
Sets the SSmn bit of serial channel start register m (SSm) to 1. →	The SEmn bit of serial channel enable status register m (SEm) is set to 1 and channel n is enabled to operate.	

Remark m: Unit number (m = 0, 1), n: Channel number (n = 0 to 3), mn = 00 to 03, 10 to 13

14.7 LIN Communication Operation

14.7.1 LIN transmission

Of UART transmission, UART0 support LIN communication.

For LIN transmission, channel 0 of unit 0 is used.

UART	UART0	UART1	UART2	UART3
Support of LIN communication	Supported	Not supported	Not supported	Not supported
Target channel	Channel 0 of SAU0	–	–	–
Pins used	TxD0	–	–	–
Interrupt	INTST0	–	–	–
	Transfer end interrupt (in single-transfer mode) or buffer empty interrupt (in continuous transfer mode) can be selected.			
Error detection flag	None			
Transfer data length	8 bits			
Transfer rate	Max. $f_{MCK}/6$ [bps] (SDR00[15:9] = 2 or more), Min. $f_{CLK}/(2 \times 2^{15} \times 128)$ [bps]Note			
Data phase	Non-reverse output (default: high level) Reverse output (default: low level)			
Parity bit	No parity bit			
Stop bit	Appending 1 bit			
Data direction	LSB first			

Note Use this operation within a range that satisfies the conditions above and the peripheral functions characteristics in the electrical specifications (see **CHAPTER 32 ELECTRICAL SPECIFICATIONS (T_A = –40 to +85°C)** and **CHAPTER 33 ELECTRICAL SPECIFICATIONS (T_A = –40 to +105°C)**). In addition, LIN communication is usually 2.4/9.6/19.2 kbps is often used.

Caution 16-bit timer KB20 cannot be used together with the LIN-bus functions. When using 16-bit timer KB20, set the ISC register to its initial value (00H).

Remark f_{MCK}: Operation clock frequency of target channel

f_{CLK}: System clock frequency

LIN stands for Local Interconnect Network and is a low-speed (1 to 20 kbps) serial communication protocol designed to reduce the cost of an automobile network.

Communication of LIN is single-master communication and up to 15 slaves can be connected to one master.

The slaves are used to control switches, actuators, and sensors, which are connected to the master via LIN.

Usually, the master is connected to a network such as CAN (Controller Area Network).

A LIN bus is a single-wire bus to which nodes are connected via transceiver conforming to ISO9141.

According to the protocol of LIN, the master transmits a frame by attaching baud rate information to it. A slave receives this frame and corrects a baud rate error from the master. If the baud rate error of a slave is within ±15%, communication can be established.

Figure 14-98 outlines a master transmission operation of LIN.

Figure 14-98. Transmission Operation of LIN

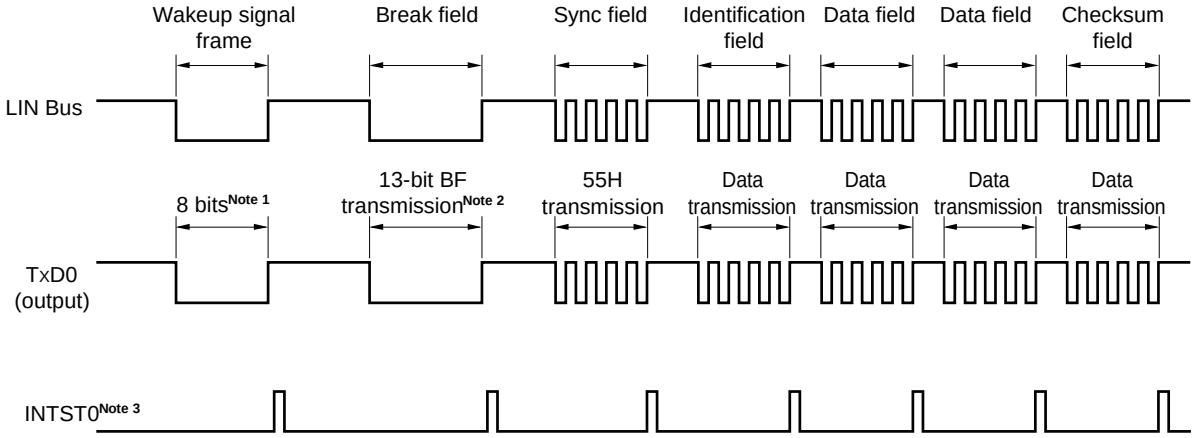

Notes 1. Set the baud rate in accordance with the wakeup signal regulations and transmit data of 80H.

2. A break field is defined to have a width of 13 bits and output a low level. Where the baud rate for main transfer is N [bps], therefore, the baud rate of the break field is calculated as follows.

(Baud rate of break field) = 9/13 × N

By transmitting data of 00H at this baud rate, a break field is generated.

3. INTST0 is output upon completion of transmission. INTST0 is also output at BF transmission.

Remark The interval between fields is controlled by software.

Figure 14-99. Flowchart for LIN Transmission

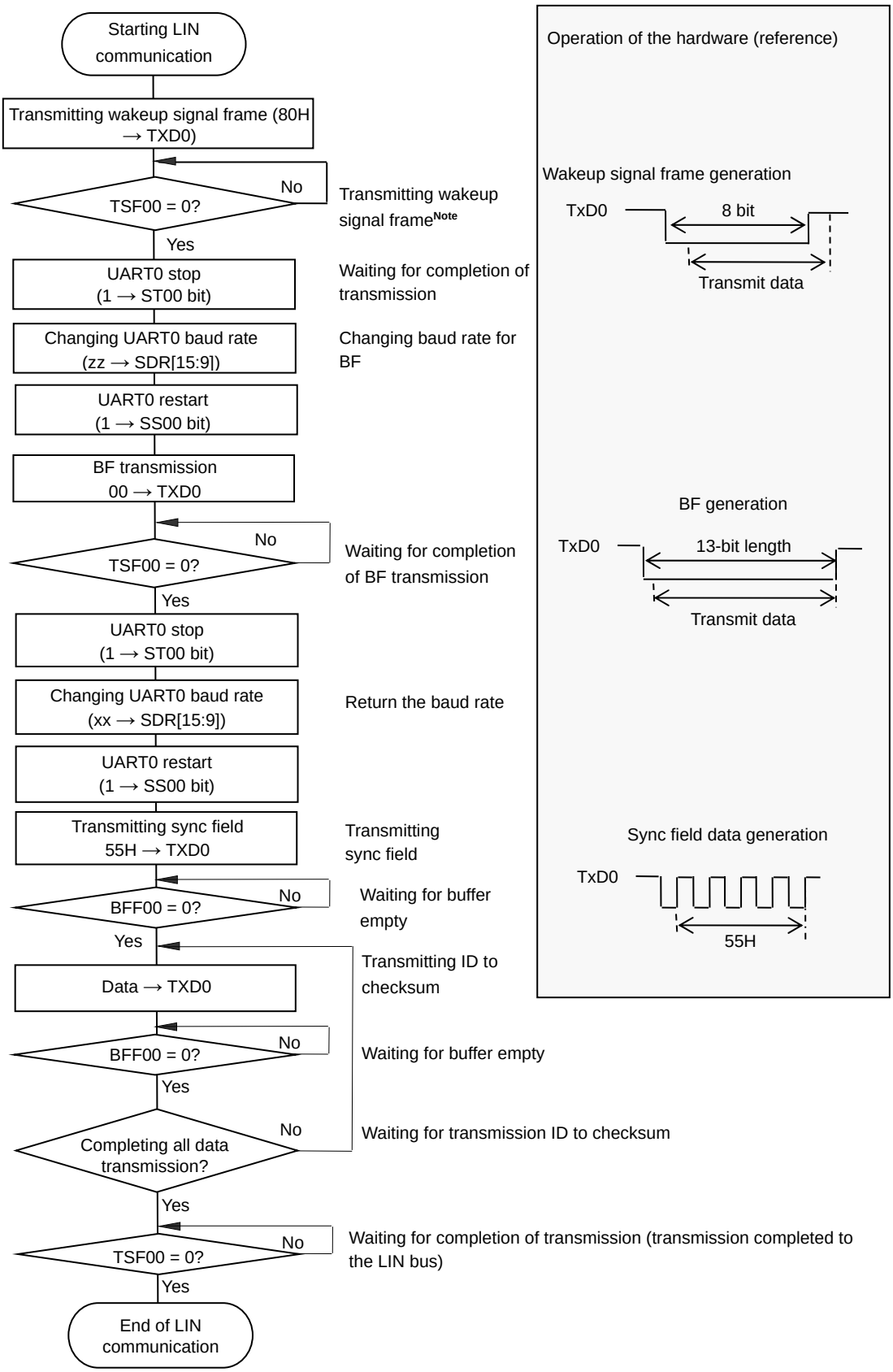

Note When LIN-bus start from sleep status only

Remark Default setting of the UART is complete, and the flow from the transmission enable status.

14.7.2 LIN reception

Of UART reception, UART0 support LIN communication.

For LIN reception, channel 1 of unit 1 is used.

UART	UART0	UART1	UART2	UART3
Support of LIN communication	Supported	Not supported	Not supported	Not supported
Target channel	Channel 1 of SAU0	–	–	–
Pins used	RxD0	–	–	–
Interrupt	INTSR0	–	–	–
	Transfer end interrupt only (Setting the buffer empty interrupt is prohibited.)			
Error interrupt	INTSRE0	–	–	–
Error detection flag	● Framing error detection flag (FEF01) ● Overrun error detection flag (OVF01)			
Transfer data length	8 bits			
Transfer rate	Max. $f_{MCK}/6$ [bps] (SDR01 [15:9] = 2 or more), Min. $f_{CLK}/(2 \times 2^{15} \times 128)$ [bps]Note			
Data phase	Non-reverse output (default: high level) Reverse output (default: low level)			
Parity bit	No parity bit (The parity bit is not checked.)			
Stop bit	Check the first bit			
Data direction	LSB first			

Note Use this operation within a range that satisfies the conditions above and the peripheral functions characteristics in the electrical specifications (see **CHAPTER 32 ELECTRICAL SPECIFICATIONS (T_A = –40 to +85°C)** and **CHAPTER 33 ELECTRICAL SPECIFICATIONS (T_A = –40 to +105°C)**).

Caution 16-bit timer KB20 cannot be used together with the LIN-bus functions. When using 16-bit timer KB20, set the ISC register to its initial value (00H).

Remark f_{MCK}: Operation clock frequency of target channel
f_{CLK}: System clock frequency

Figure 14-100 outlines a reception operation of LIN.

Figure 14-100. Reception Operation of LIN

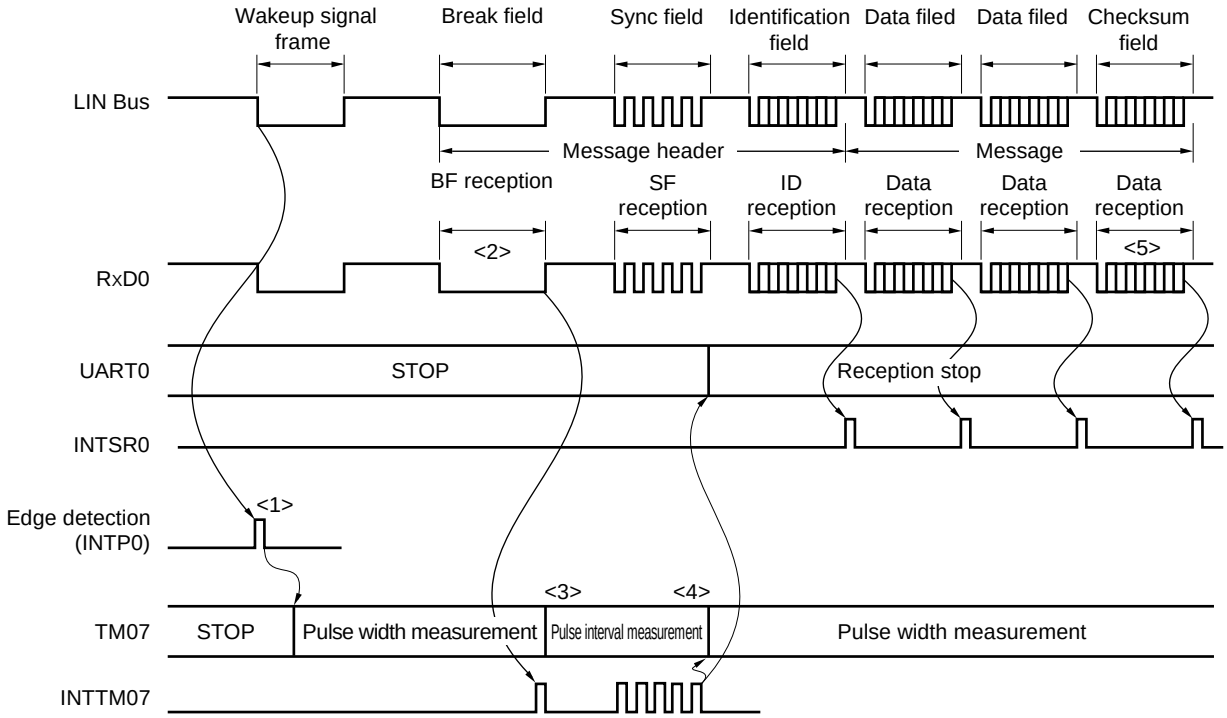

Here is the flow of signal processing.

<1> The wakeup signal is detected by detecting an interrupt edge (INTP0) on a pin. When the wakeup signal is detected, change TM07 to pulse width measurement upon detection of the wakeup signal to measure the low-level width of the BF signal. Then wait for BF signal reception.

<2> TM07 starts measuring the low-level width upon detection of the falling edge of the BF signal, and then captures the data upon detection of the rising edge of the BF signal. The captured data is used to judge whether it is the BF signal.

<3> When the BF signal has been received normally, change TM07 to pulse interval measurement and measure the interval between the falling edges of the RxD0 signal in the Sync field four times (see **6.8.3 Operation as input pulse interval measurement**).

<4> Calculate a baud rate error from the bit interval of sync field (SF). Stop UART2 once and adjust (re-set) the baud rate.

<5> The checksum field should be distinguished by software. In addition, processing to initialize UART2 after the checksum field is received and to wait for reception of BF should also be performed by software.

Figure 14-101. Flowchart for LIN Reception

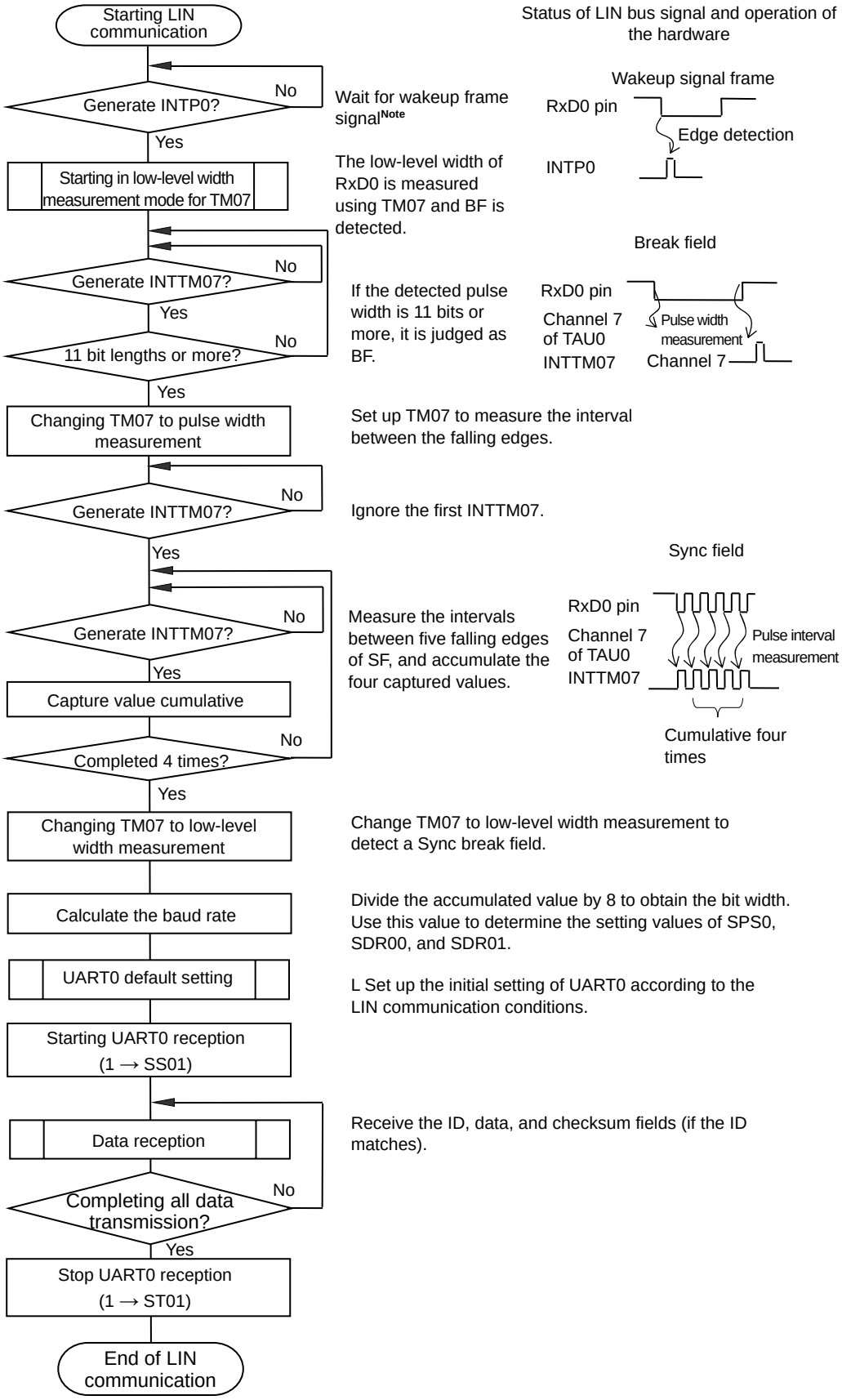

Note Required in the sleep status only.

Figure 14-102 shows the configuration of a port that manipulates reception of LIN.

The wakeup signal transmitted from the master of LIN is received by detecting an edge of an external interrupt (INTP0). The length of the sync field transmitted from the master can be measured by using the external event capture operation of the timer array unit 0 to calculate a baud-rate error.

By controlling switch of port input (ISC0/ISC1), the input source of port input (RxD0) for reception can be input to the external interrupt pin (INTP0) and timer array unit

Figure 14-102. Port Configuration for Manipulating Reception of LIN

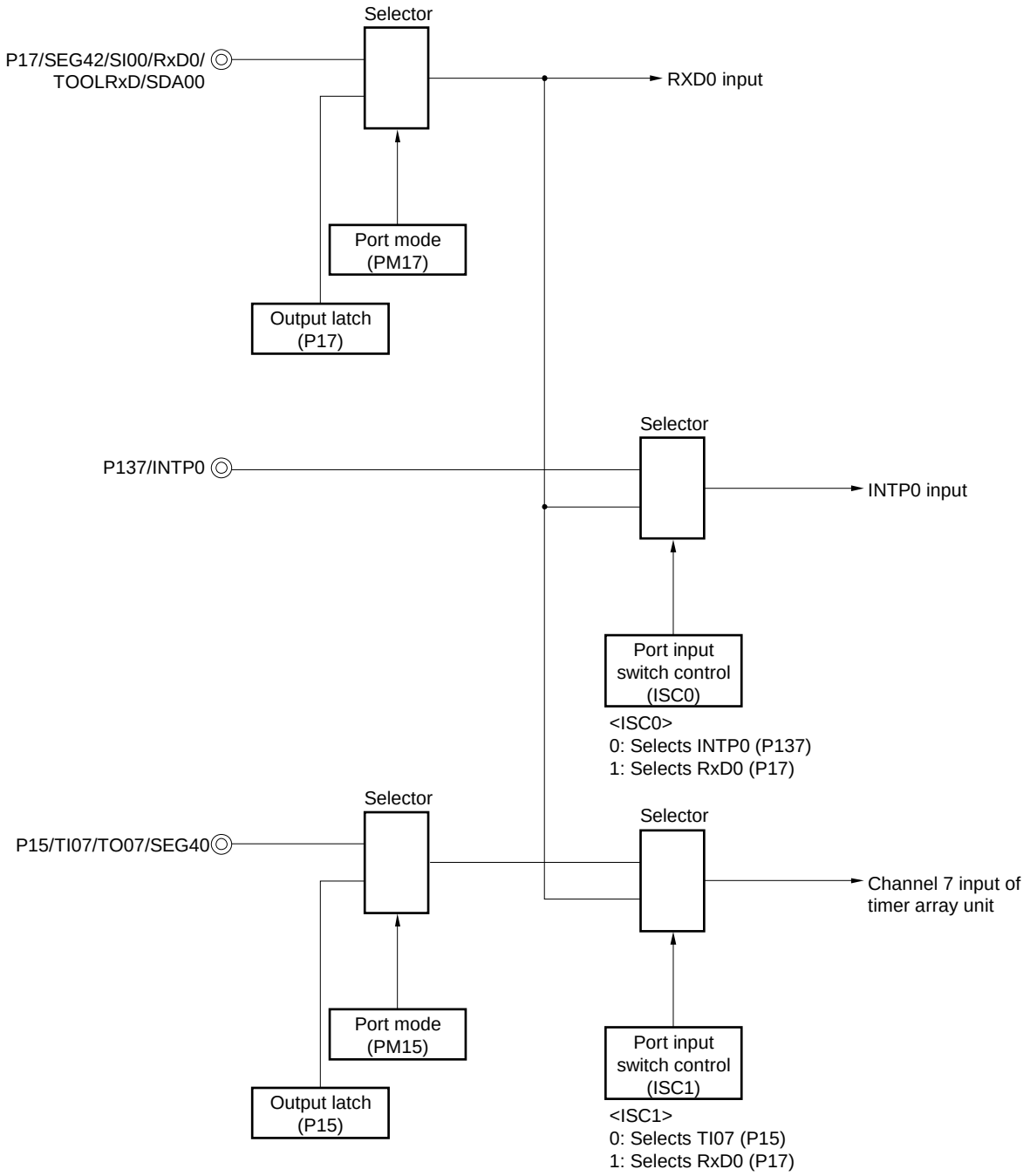

Remark ISC0, ISC1: Bits 0 and 1 of the input switch control register (ISC) (See **Figure 14-21**.)

The peripheral functions used for the LIN communication operation are as follows.

<Peripheral functions used>

- External interrupt (INTP0); Wakeup signal detection
  Usage: To detect an edge of the wakeup signal and the start of communication
- Channel 7 of timer array unit; Baud rate error detection, break field detection.
  Usage: To detect the length of the sync field (SF) and divide it by the number of bits in order to detect an error (The interval of the edge input to RxD0 is measured in the capture mode.)
  Measured the low-level width, determine whether break field (BF).
- Channels 0 and 1 (UART0) of serial array unit 0 (SAU0)

14.8 Operation of Simplified I^{2}C (IIC00, IIC10) Communication

This is a clocked communication function to communicate with two or more devices by using two lines: serial clock (SCL) and serial data (SDA). This communication function is designed to execute single communication with devices such as EEPROM, flash memory, and A/D converter, and therefore, can be used only by the master.

Operate the control registers by software for setting the start and stop conditions while observing the specifications of the I^{2}C bus line

[Data transmission/reception]

- Master transmission, master reception (only master function with a single master)
- ACK output function[Note] and ACK detection function
- Data length of 8 bits
  (When an address is transmitted, the address is specified by the higher 7 bits, and the least significant bit is used for R/W control.)
- Gneration of start condition and stop condition for software

[Interrupt function]

- Transfer end interrupt

[Error detection flag]

- Parity error (ACK error)

* [Functions not supported by simplified I^{2}C]
  - Slave transmission, slave reception
  - Multi-master function (arbitration loss detection function)
  - Wait detection function

Note When receiving the last data, ACK will not be output if 0 is written to the SOEmn (SOEm register) bit and serial communication data output is stopped. See the processing flow in **14.8.3 (2)** for details.

Remark m: Unit number (m = 0), n: Channel number (n = 0, 2), mn = 00, 02

The channel supporting simplified I²C (IIC00, IIC10) is channels 0 and 2 of SAU0.

- 64-pin products

Unit	Channel	Used as Simplified SPI (CSI)	Used as UART	Used as Simplified I²C
0	0	CSI00	UART0 (supporting LIN-bus)	IIC00
	1	–		–
	2	CSI10	UART1	IIC10
	3	–		–
1	0	–	UART2	–
	1	–		–

- 80-pin products

Unit	Channel	Used as Simplified SPI (CSI)	Used as UART	Used as Simplified I²C
0	0	CSI00	UART0 (supporting LIN-bus)	IIC00
	1	–		–
	2	CSI10	UART1	IIC10
	3	–		–
1	0	–	UART2	–
	1	–		–
	2	–	UART3	–
	3	–		–

Simplified I²C (IIC00, IIC10) performs the following four types of communication operations.

- Address field transmission (See **14.8.1**.)
- Data transmission (See **14.8.2**.)
- Data reception (See **14.8.3**.)
- Stop condition generation (See **14.8.4**.)

14.8.1 Address field transmission

Address field transmission is a transmission operation that first executes in I^2C communication to identify the target for transfer (slave). After a start condition is generated, an address (7 bits) and a transfer direction (1 bit) are transmitted in one frame.

Simplified I^2C	IIC00	IIC10
Target channel	Channel 0 of SAU0	Channel 2 of SAU0
Pins used	SCL00, SDA00[Note 1]	SCL10, SDA10[Note 1]
Interrupt	INTIIC00	INTIIC10
	Transfer end interrupt only (Setting the buffer empty interrupt is prohibited.)	
Error detection flag	ACK error detection flag (PEFmn)	
Transfer data length	8 bits (transmitted with specifying the higher 7 bits as address and the least significant bit as R/W control)	
Transfer rate[Note 2]	Max. $f_{MCK}/4$ [Hz] (SDRmn[15:9] = 1 or more) f_{MCK}: Operation clock frequency of target channel However, the following condition must be satisfied in each mode of I^2C. ● Max. 1 MHz (fast mode plus) ● Max. 400 kHz (fast mode) ● Max. 100 kHz (standard mode)	
Data level	Non-reversed output (default: high level)	
Parity bit	No parity bit	
Stop bit	Appending 1 bit (for ACK reception timing)	
Data direction	MSB first	

Notes 1. To perform communication via simplified I^2C, set the N-ch open-drain output (V_{DD} tolerance) mode (POM06, POM17 = 1) for the port output mode registers (POM0, POM1) (see **4.3 Registers Controlling Port Function** for details). When IIC00, IIC10 communicating with an external device with a different potential, set the N-ch open-drain output (V_{DD} tolerance) mode (POM05, POM16 = 1) also for the clock input/output pins (SCL00, SCL10) (see **4.4.4 Handling different potential (1.8 V, 2.5 V, 3 V) by using I/O buffers** for details).

2. Use this operation within a range that satisfies the conditions above and the peripheral functions characteristics in the electrical specifications (see **CHAPTER 32 ELECTRICAL SPECIFICATIONS (T_A = –40 to +85°C)** and **CHAPTER 33 ELECTRICAL SPECIFICATIONS (T_A = –40 to +105°C)**).

Remark m: Unit number (m = 0), n: Channel number (n = 0, 2), mn = 00, 02

(1) Register setting

Figure 14-103. Example of Contents of Registers for Address Field Transmission of Simplified I²C (IIC00, IIC10) (1/2)

(a) Serial mode register mn (SMRmn)

	15	14	13	12	11	10	9	8	7	6	5	4	3	2	1	0
SMRmn	CKSmn	CCSmn						STSmn		SISmn0				MDmn2	MDmn1	MDmn0
	0/1	0	0	0	0	0	0	0	0	0	1	0	0	1	0	0

Operation clock (f_{MCK}) of channel n
0: Prescaler output clock CKm0 set by the SPSm register
1: Prescaler output clock CKm1 set by the SPSm register

Operation mode of channel n
0: Transfer end interrupt

(b) Serial communication operation setting register mn (SCRmn)

	15	14	13	12	11	10	9	8	7	6	5	4	3	2	1	0
SCRmn	TXEmn	RXEmn	DAPmn	CKPmn		EOCmn	PTCmn1	PTCmn0	DIRmn		SLCmn1	SLCmn0			DLSmn1	DLSmn0
	1	0	0	0	0	0	0	0	0	0	0	1	0	1	1 Note	1

Setting of parity bit
00B: No parity

Setting of stop bit
01B: Appending 1 bit (ACK)

(c) Serial data register mn (SDRmn) (lower 8 bits: SIOr)

	15	14	13	12	11	10	9	8	7	6	5	4	3	2	1	0
SDRmn	Baud rate setting							0	Transmit data setting (address + R/W)							

SIOr

(d) Serial output register m (SOm)

	15	14	13	12	11	10	9	8	7	6	5	4	3	2	1	0
SOm						CKOm2		CKOm0						SOm2		SOm0
	0	0	0	0	1	0/1	1	0/1	0	0	0	0	1	0/1	1	0/1

Start condition is generated by manipulating the SOmn bit.

(e) Serial output enable register m (SOEm)

	15	14	13	12	11	10	9	8	7	6	5	4	3	2	1	0
SOEm														SOEm2		SOEm0
	0	0	0	0	0	0	0	0	0	0	0	0	0	0/1	0	0/1

SOEmn = 0 until the start condition is generated, and SOEmn = 1 after generation.

Note Only provided for the SCR00 register. This bit is fixed to 1 for the other registers.

Remarks 1. m: Unit number (m = 0), n: Channel number (n = 0, 2), r: IIC number (r = 00, 10), mn = 00, 02

2. ☐: Setting is fixed in the IIC mode, ▒: Setting disabled (set to the initial value)
×: Bit that cannot be used in this mode (set to the initial value when not used in any mode)
0/1: Set to 0 or 1 depending on the usage of the user

Figure 14-103. Example of Contents of Registers for Address Field Transmission of Simplified I²C (IIC00, IIC10) (2/2)

(f) Serial channel start register m (SSm) … Sets only the bits of the target channel is 1.

	15	14	13	12	11	10	9	8	7	6	5	4	3	2	1	0
SSm	0	0	0	0	0	0	0	0	0	0	0	0	SSm3 ×	SSm2 0/1	SSm1 ×	SSm0 0/1

SSmn = 0 until the start condition is generated, and SSmn = 1 after generation.

Remarks 1. m: Unit number (m = 0), n: Channel number (n = 0, 2), r: IIC number (r = 00, 10), mn = 00, 02

2. ☐ : Setting disabled (set to the initial value)

×: Bit that cannot be used in this mode (set to the initial value when not used in any mode)

0/1: Set to 0 or 1 depending on the usage of the user

(2) Operation procedure

Figure 14-104. Initial Setting Procedure for Simplified I²C

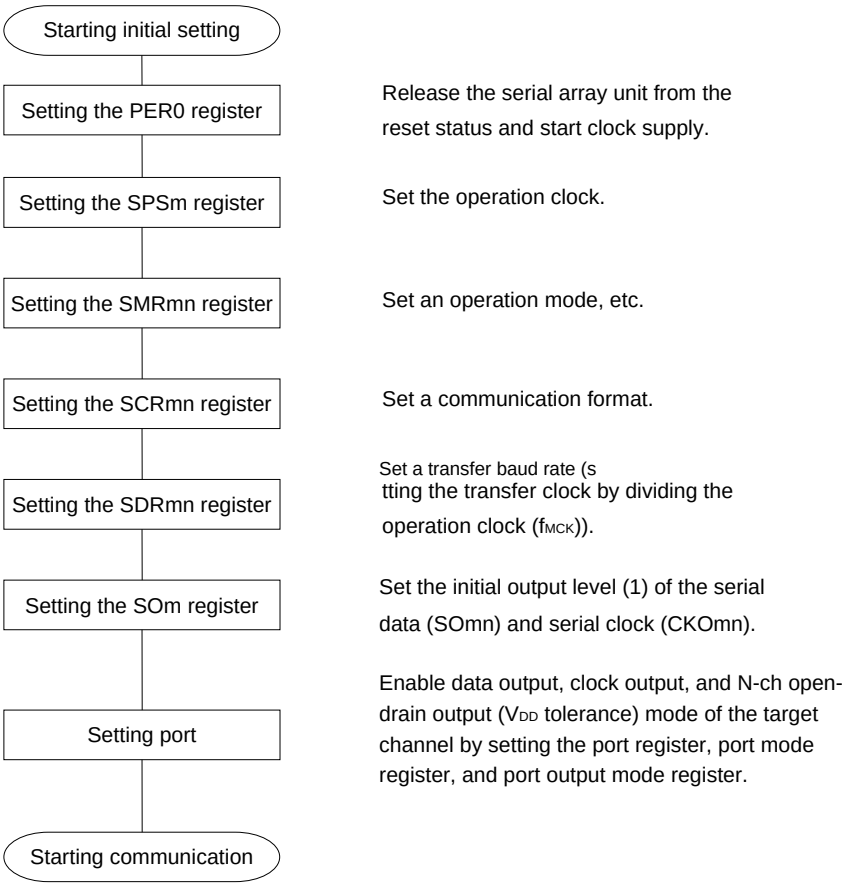

(3) Processing flow

Figure 14-105. Timing Chart of Address Field Transmission

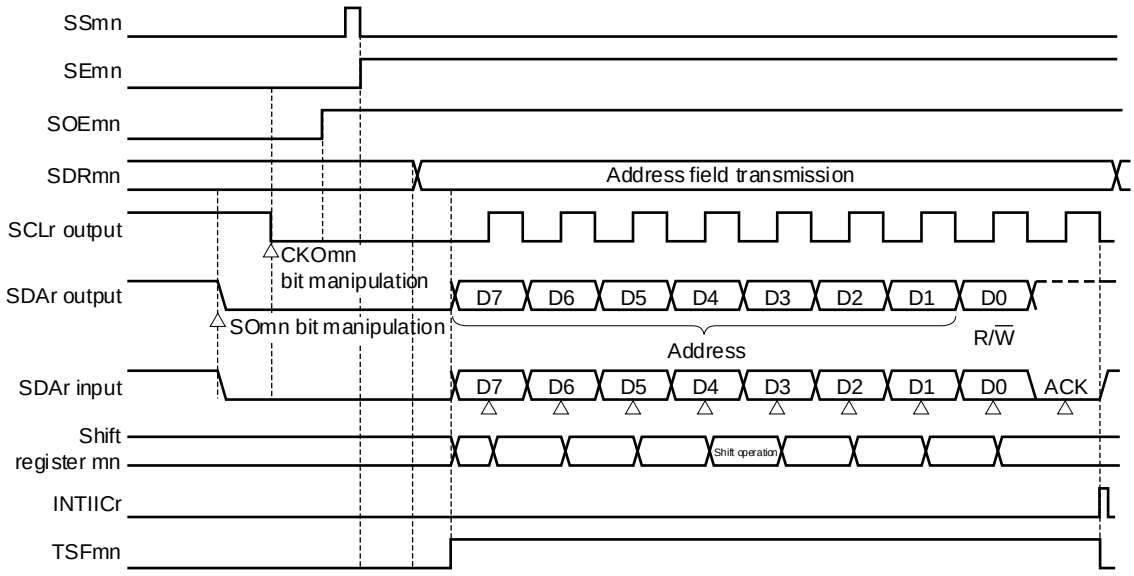

Remark m: Unit number (m = 0), n: Channel number (n = 0, 2), r: IIC number (r = 00, 10), mn = 00, 02

Figure 14-106. Flowchart of Simplified I²C Address Field Transmission

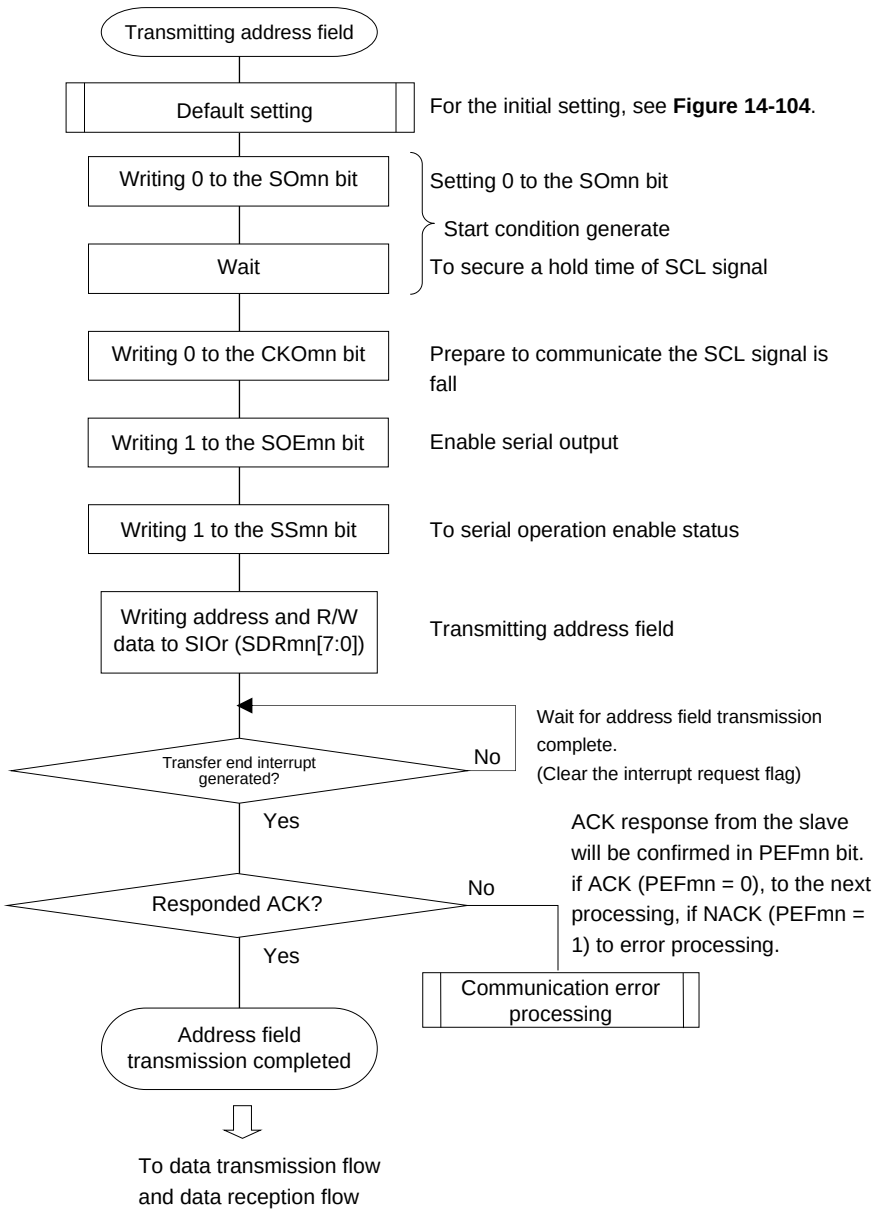

14.8.2 Data transmission

Data transmission is an operation to transmit data to the target for transfer (slave) after transmission of an address field. After all data are transmitted to the slave, a stop condition is generated and the bus is released.

Simplified I^2C	IIC00	IIC10
Target channel	Channel 0 of SAU0	Channel 2 of SAU0
Pins used	SCL00, SDA00[Note 1]	SCL10, SDA10[Note 1]
Interrupt	INTIIC00	INTIIC10
	Transfer end interrupt only (Setting the buffer empty interrupt is prohibited.)	
Error detection flag	ACK error flag (PEFmn)	
Transfer data length	8 bits	
Transfer rate[Note 2]	Max. $f_{MCK}/4$ [Hz] (SDRmn[15:9] = 1 or more) f_{MCK}: Operation clock frequency of target channel However, the following condition must be satisfied in each mode of I^2C. ● Max. 1 MHz (fast mode plus) ● Max. 400 kHz (fast mode) ● Max. 100 kHz (standard mode)	
Data level	Non-reversed output (default: high level)	
Parity bit	No parity bit	
Stop bit	Appending 1 bit (for ACK reception timing)	
Data direction	MSB first	

Notes 1. To perform communication via simplified I^2C, set the N-ch open-drain output (V_{DD} tolerance) mode (POM06, POM17 = 1) for the port output mode registers (POM0, POM1) (see **4.3 Registers Controlling Port Function** for details). When IIC00, IIC10 communicating with an external device with a different potential, set the N-ch open-drain output (V_{DD} tolerance) mode (POM05, POM16 = 1) also for the clock input/output pins (SCL00, SCL10) (see **4.4.4 Handling different potential (1.8 V, 2.5 V, 3 V) by using I/O buffers** for details).

2. Use this operation within a range that satisfies the conditions above and the peripheral functions characteristics in the electrical specifications (see **CHAPTER 32 ELECTRICAL SPECIFICATIONS (T_A = –40 to +85°C)** and **CHAPTER 33 ELECTRICAL SPECIFICATIONS (T_A = –40 to +105°C)**).

Remark m: Unit number (m = 0), n: Channel number (n = 0, 2), mn = 00, 02

(1) Register setting

Figure 14-107. Example of Contents of Registers for Data Transmission of Simplified I²C (IIC00, IIC10) (1/2)

(a) Serial mode register mn (SMRmn) … Do not manipulate this register during data transmission/reception.

	15	14	13	12	11	10	9	8	7	6	5	4	3	2	1	0
SMRmn	CKSmn 0/1	CCSmn 0	0	0	0	0	0	STSmn 0	0	SISmn0 0	1	0	0	MDmn2 1	MDmn1 0	MDmn0 0

(b) Serial communication operation setting register mn (SCRmn) … Do not manipulate the bits of this register, except the TXEmn and RXEmn bits, during data transmission/reception.

	15	14	13	12	11	10	9	8	7	6	5	4	3	2	1	0
SCRmn	TXEmn 1	RXEmn 0	DAPmn 0	CKPmn 0	0	EOCmn 0	PTCmn1 0	PTCmn0 0	DIRmn 0	0	SLCmn1 0	SLCmn0 1	0	1	DLSmn1 1 Note 1	DLSmn0 1

(c) Serial data register mn (SDRmn) (lower 8 bits: SIOr) … During data transmission/reception, valid only lower 8-bits (SIOr)

	15	14	13	12	11	10	9	8	7	6	5	4	3	2	1	0
SDRmn	Baud rate setting Note 2							0	Transmit data setting							

SIOr

(d) Serial output register m (SOm) … Do not manipulate this register during data transmission/reception.

	15	14	13	12	11	10	9	8	7	6	5	4	3	2	1	0
SOm	0	0	0	0	1	CKOm2 0/1 Note 3	1	CKOm0 0/1 Note 3	0	0	0	0	1	SOm2 0/1 Note 3	1	SOm0 0/1 Note 3

(e) Serial output enable register m (SOEm) … Do not manipulate this register during data transmission/reception.

	15	14	13	12	11	10	9	8	7	6	5	4	3	2	1	0
SOEm	0	0	0	0	0	0	0	0	0	0	0	0	0	SOEm2 1	0	SOEm0 1

Notes 1. Only provided for the SCR00 register. This bit is fixed to 1 for the other registers.
2. Because the setting is completed by address field transmission, setting is not required.
3. The value varies depending on the communication data during communication operation.

Remarks 1. m: Unit number (m = 0), n: Channel number (n = 0, 2), r: IIC number (r = 00, 10), mn = 00, 02
2. ☐: Setting is fixed in the IIC mode, ▒: Setting disabled (set to the initial value)
×: Bit that cannot be used in this mode (set to the initial value when not used in any mode)
0/1: Set to 0 or 1 depending on the usage of the user

Figure 14-107. Example of Contents of Registers for Data Transmission of Simplified I²C (IIC00, IIC10) (2/2)

(f) Serial channel start register m (SSm) … Do not manipulate this register during data transmission/reception.

	15	14	13	12	11	10	9	8	7	6	5	4	3	2	1	0
SSm	0	0	0	0	0	0	0	0	0	0	0	0	SSm3 ×	SSm2 0/1	SSm1 ×	SSm0 0/1

Remarks 1. m: Unit number (m = 0), n: Channel number (n = 0, 2), r: IIC number (r = 00, 10), mn = 00, 02

2. ▒ : Setting disabled (set to the initial value)

×: Bit that cannot be used in this mode (set to the initial value when not used in any mode)

0/1: Set to 0 or 1 depending on the usage of the user

(2) Processing flow

Figure 14-108. Timing Chart of Data Transmission

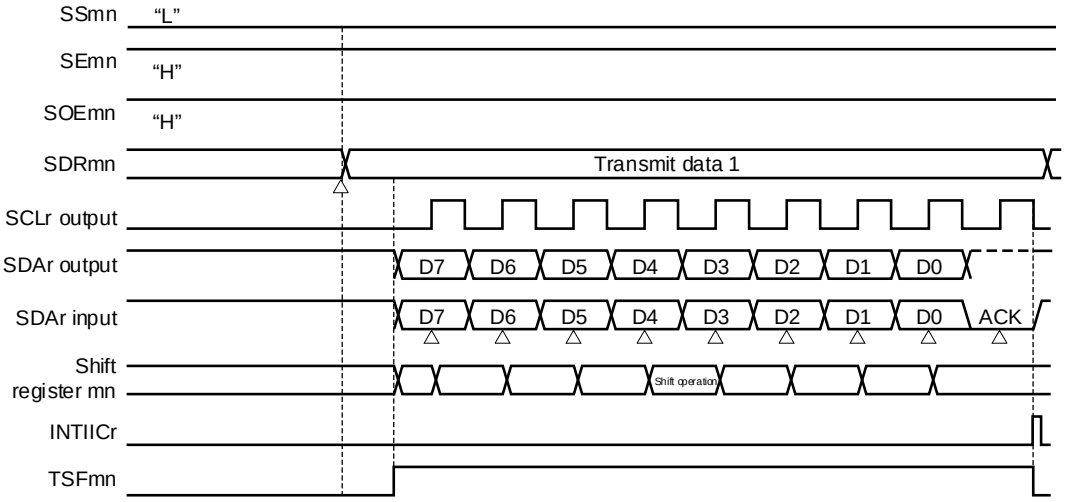

Figure 14-109. Flowchart of Simplified I²C Data Transmission

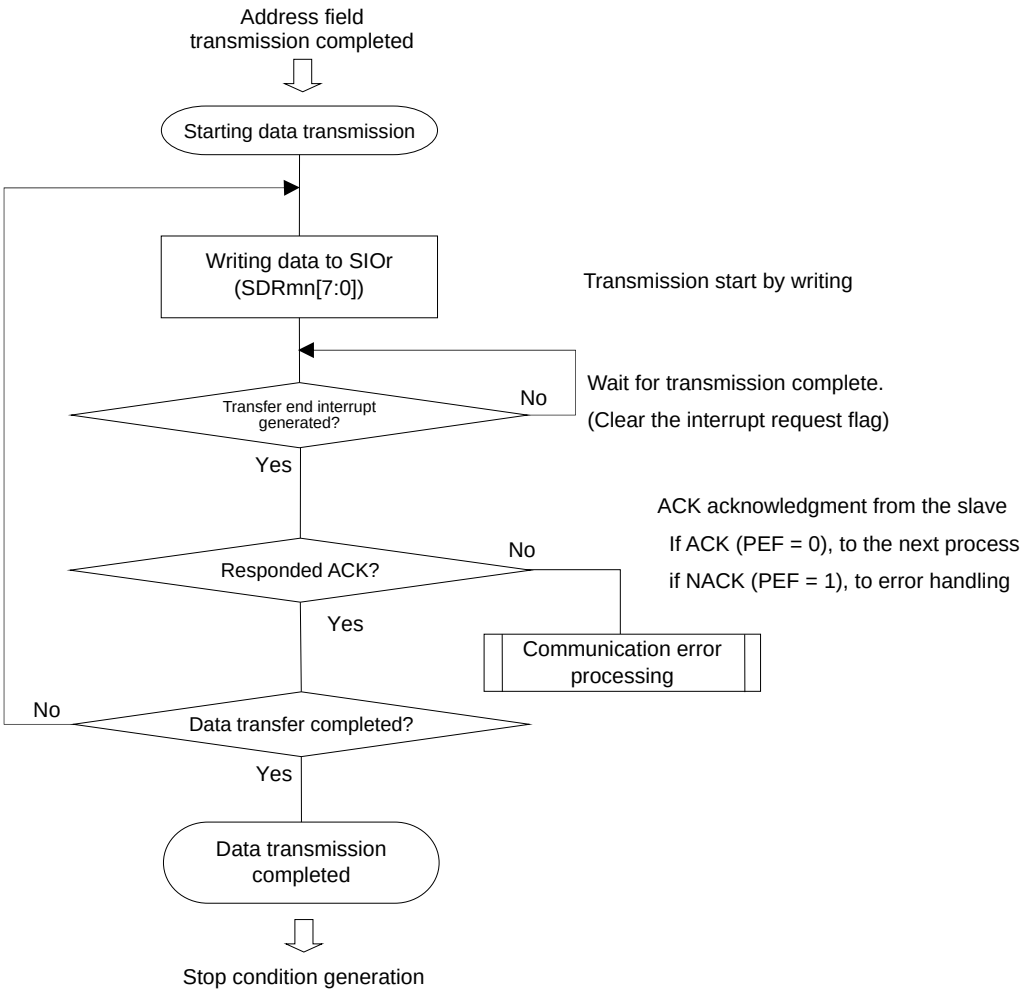

14.8.3 Data reception

Data reception is an operation to receive data to the target for transfer (slave) after transmission of an address field. After all data are received to the slave, a stop condition is generated and the bus is released.

Simplified I^2C	IIC00	IIC10
Target channel	Channel 0 of SAU0	Channel 2 of SAU0
Pins used	SCL00, SDA00[Note 1]	SCL10, SDA10[Note 1]
Interrupt	INTIIC00	INTIIC10
	Transfer end interrupt only (Setting the buffer empty interrupt is prohibited.)	
Error detection flag	Overrun error detection flag (OVFmn) only	
Transfer data length	8 bits	
Transfer rate[Note 2]	Max. $f_{MCK}/4$ [Hz] (SDRmn[15:9] = 1 or more) f_{MCK}: Operation clock frequency of target channel However, the following condition must be satisfied in each mode of I^2C. ● Max. 1 MHz (fast mode plus) ● Max. 400 kHz (fast mode) ● Max. 100 kHz (standard mode)	
Data level	Non-reversed output (default: high level)	
Parity bit	No parity bit	
Stop bit	Appending 1 bit (ACK transmission)	
Data direction	MSB first	

Notes 1. To perform communication via simplified I^2C, set the N-ch open-drain output (V_{DD} tolerance) mode (POM06, POM17 = 1) for the port output mode registers (POM0, POM1) (see **4.3 Registers Controlling Port Function** for details). When IIC00, IIC10 communicating with an external device with a different potential, set the N-ch open-drain output (V_{DD} tolerance) mode (POM05, POM16 = 1) also for the clock input/output pins (SCL00, SCL10) (see **4.4.4 Handling different potential (1.8 V, 2.5 V, 3 V) by using I/O buffers** for details).

2. Use this operation within a range that satisfies the conditions above and the peripheral functions characteristics in the electrical specifications (see **CHAPTER 32 ELECTRICAL SPECIFICATIONS (T_A = –40 to +85°C)** and **CHAPTER 33 ELECTRICAL SPECIFICATIONS (T_A = –40 to +105°C)**).

Remark m: Unit number (m = 0), n: Channel number (n = 0, 2), mn = 00, 02

(1) Register setting

Figure 14-110. Example of Contents of Registers for Data Reception of Simplified I²C (IIC00, IIC10) (1/2)

(a) Serial mode register mn (SMRmn) … Do not manipulate this register during data transmission/reception.

	15	14	13	12	11	10	9	8	7	6	5	4	3	2	1	0
SMRmn	CKSmn 0/1	CCSmn 0	0	0	0	0	0	STSmn 0	0	SISmn0 0	1	0	0	MDmn2 1	MDmn1 0	MDmn0 0

(b) Serial communication operation setting register mn (SCRmn) … Do not manipulate the bits of this register, except the TXEmn and RXEmn bits, during data transmission/reception.

	15	14	13	12	11	10	9	8	7	6	5	4	3	2	1	0
SCRmn	TXEmn 0	RXEmn 1	DAPmn 0	CKPmn 0	0	EOCmn 0	PTCmn1 0	PTCmn0 0	DIRmn 0	0	SLCmn1 0	SLCmn0 1	0	1	DLSmn1 1 Note 1	DLSmn0 1

(c) Serial data register mn (SDRmn) (lower 8 bits: SIOr)

	15	14	13	12	11	10	9	8	7	6	5	4	3	2	1	0
SDRmn	Baud rate setting Note 2							0	Dummy transmit data setting (FFH)							

SIOr

(d) Serial output register m (SOm) … Do not manipulate this register during data transmission/reception.

	15	14	13	12	11	10	9	8	7	6	5	4	3	2	1	0
SOm	0	0	0	0	1	CKOm2 0/1 Note 3	1	CKOm0 0/1 Note 3	0	0	0	0	1	SOm2 0/1 Note 3	1	SOm0 0/1 Note 3

(e) Serial output enable register m (SOEm) … Do not manipulate this register during data transmission/reception.

	15	14	13	12	11	10	9	8	7	6	5	4	3	2	1	0
SOEm	0	0	0	0	0	0	0	0	0	0	0	0	0	SOEm2 0/1	0	SOEm0 0/1

Notes 1. Only provided for the SCR00 register. This bit is fixed to 1 for the other registers.

2. The baud rate setting is not required because the baud rate has already been set when the address field was transmitted.

3. The value varies depending on the communication data during communication operation.

Remarks 1. m: Unit number (m = 0), n: Channel number (n = 0, 2), r: IIC number (r = 00, 10), mn = 00, 02

2. ☐: Setting is fixed in the IIC mode, ▒: Setting disabled (set to the initial value)

×: Bit that cannot be used in this mode (set to the initial value when not used in any mode)

0/1: Set to 0 or 1 depending on the usage of the user

Figure 14-110. Example of Contents of Registers for Data Reception of Simplified I²C (IIC00, IIC10) (2/2)

(f) Serial channel start register m (SSm) … Do not manipulate this register during data transmission/reception.

	15	14	13	12	11	10	9	8	7	6	5	4	3	2	1	0
SSm	0	0	0	0	0	0	0	0	0	0	0	0	SSm3 ×	SSm2 0/1	SSm1 ×	SSm0 0/1

Remarks 1. m: Unit number (m = 0), n: Channel number (n = 0, 2), r: IIC number (r = 00, 10), mn = 00, 02

2. ▒: Setting disabled (set to the initial value)

×: Bit that cannot be used in this mode (set to the initial value when not used in any mode)

0/1: Set to 0 or 1 depending on the usage of the user

(2) Processing flow

Figure 14-111. Timing Chart of Data Reception

(a) When starting data reception

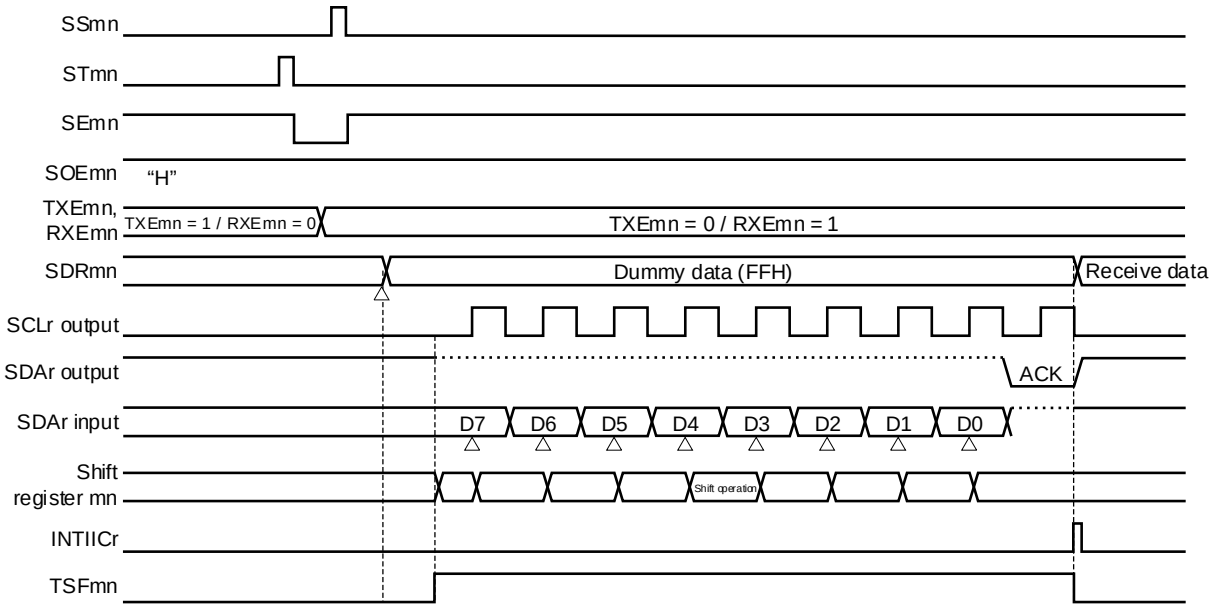

(b) When receiving last data

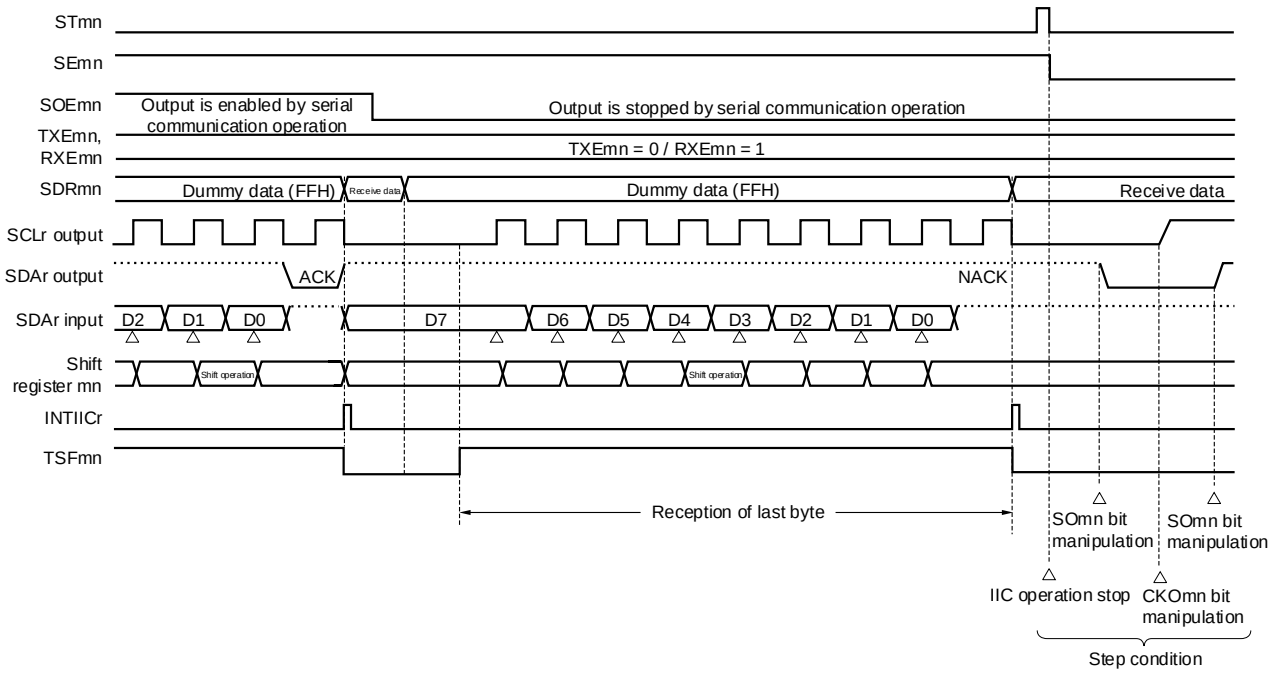

Remark m: Unit number (m = 0), n: Channel number (n = 0, 2), r: IIC number (r = 00, 10), mn = 00, 02

Figure 14-112. Flowchart of Data Reception

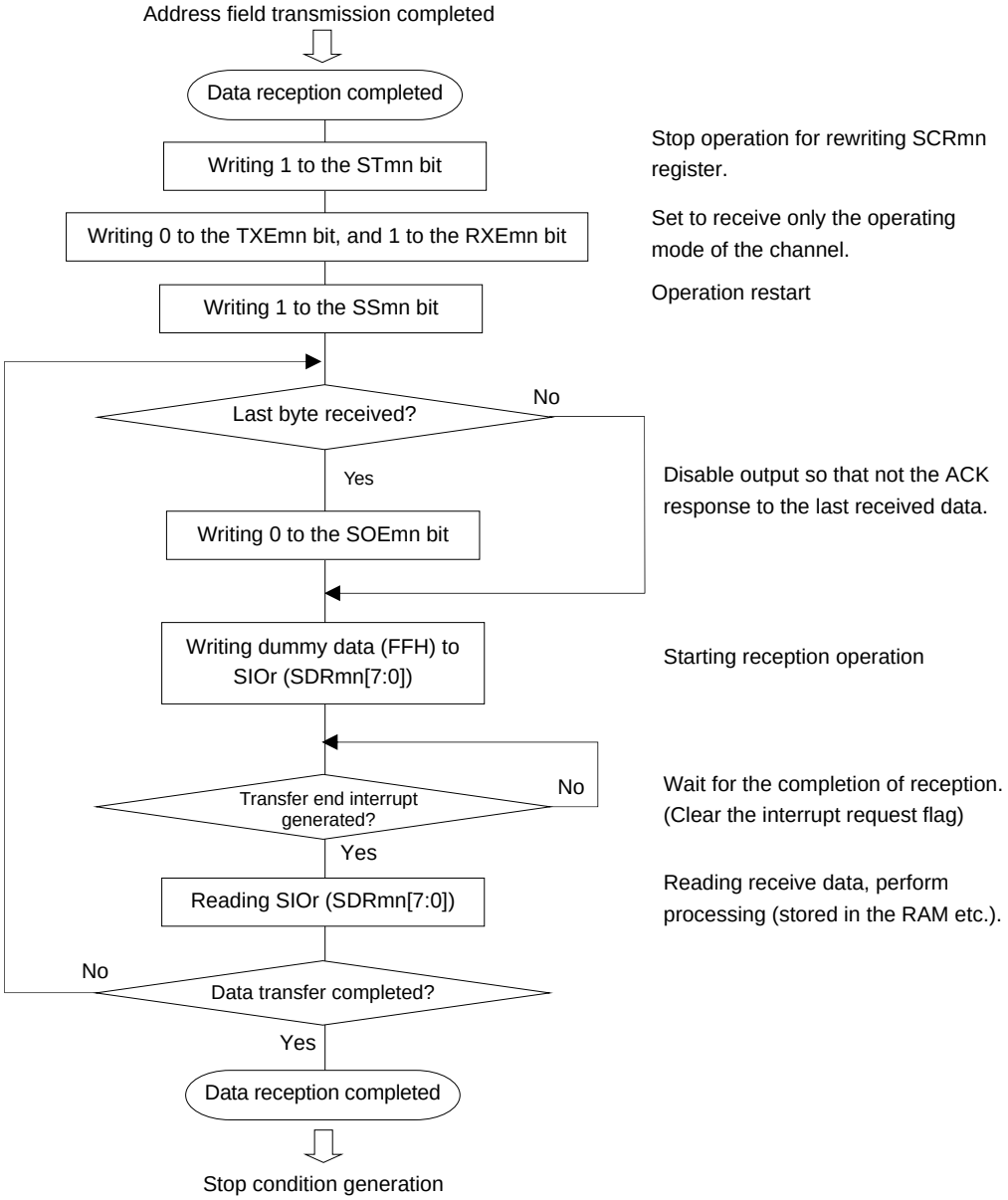

Caution ACK is not output when the last data is received (NACK). Communication is then completed by setting "1" to the STmn bit of serial channel stop register m (STm) to stop operation and generating a stop condition.

14.8.4 Stop condition generation

After all data are transmitted to or received from the target slave, a stop condition is generated and the bus is released.

(1) Processing flow

Figure 14-113. Timing Chart of Stop Condition Generation

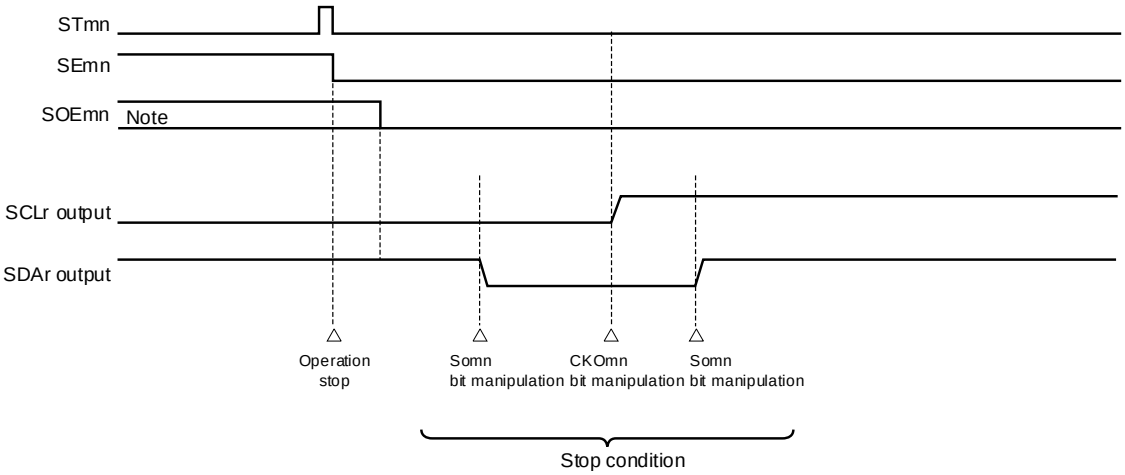

Note During a receive operation, the SOEmn bit of serial output enable register m (SOEm) is cleared to 0 before receiving the last data.

Figure 14-114. Flowchart of Stop Condition Generation

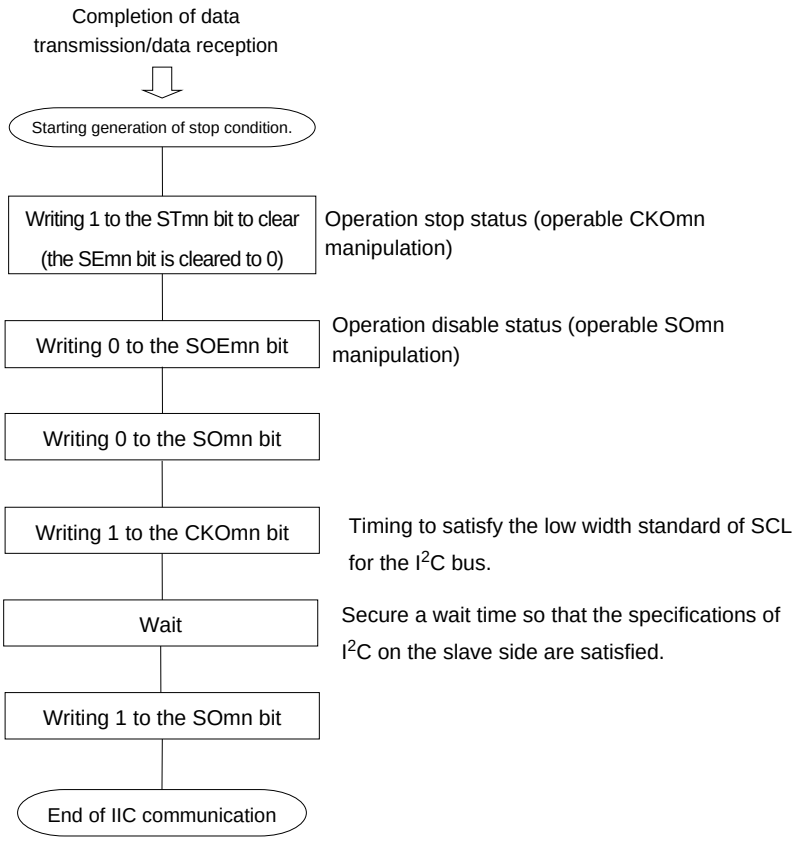

14.8.5 Calculating transfer rate

The transfer rate for simplified I²C (IIC00, IIC10) communication can be calculated by the following expressions.

(Transfer rate) = {Operation clock (f_{MCK}) frequency of target channel} ÷ (SDRmn[15:9] + 1) ÷ 2

Caution SDRmn[15:9] must not be set to 00000000B. Be sure to set a value of 00000001B or greater for SDRmn[15:9]. The duty ratio of the SCL signal output by the simplified I2C is 50%. The I2C bus specifications define that the low-level width of the SCL signal is longer than the high-level width. If 400 kbps (fast mode) or 1 Mbps (fast mode plus) is specified, therefore, the low-level width of the SCL output signal becomes shorter than the value specified in the I2C bus specifications. Make sure that the SDRmn[15:9] value satisfies the I2C bus specifications.

Remarks 1. The value of SDRmn[15:9] is the value of bits 15 to 9 of the SDRmn register (0000001B to 1111111B) and therefore is 1 to 127.

2. m: Unit number (m = 0), n: Channel number (n = 0, 2), mn = 00, 02

The operation clock (f_{MCK}) is determined by serial clock select register m (SPSm) and bit 15 (CKSmn) of serial mode register mn (SMRmn).

Table 14-5. Selection of Operation Clock For Simplified I²C

SMRmn Register	SPSm Register								Operation Clock (f_{MCK}) Note	
CKSmn	PRS m13	PRS m12	PRS m11	PRS m10	PRS m03	PRS m02	PRS m01	PRS m00		f_{CLK} = 24 MHz
0	X	X	X	X	0	0	0	0	f_{CLK}	24 MHz
	X	X	X	X	0	0	0	1	$f_{CLK}/2$	12 MHz
	X	X	X	X	0	0	1	0	$f_{CLK}/2^2$	6 MHz
	X	X	X	X	0	0	1	1	$f_{CLK}/2^3$	3 MHz
	X	X	X	X	0	1	0	0	$f_{CLK}/2^4$	1.5 MHz
	X	X	X	X	0	1	0	1	$f_{CLK}/2^5$	750 kHz
	X	X	X	X	0	1	1	0	$f_{CLK}/2^6$	375 kHz
	X	X	X	X	0	1	1	1	$f_{CLK}/2^7$	187.5 kHz
	X	X	X	X	1	0	0	0	$f_{CLK}/2^8$	93.8 kHz
	X	X	X	X	1	0	0	1	$f_{CLK}/2^9$	46.9 kHz
	X	X	X	X	1	0	1	0	$f_{CLK}/2^{10}$	23.4 kHz
	X	X	X	X	1	0	1	1	$f_{CLK}/2^{11}$	11.7 kHz
1	0	0	0	0	X	X	X	X	f_{CLK}	24 MHz
	0	0	0	1	X	X	X	X	$f_{CLK}/2$	12 MHz
	0	0	1	0	X	X	X	X	$f_{CLK}/2^2$	6 MHz
	0	0	1	1	X	X	X	X	$f_{CLK}/2^3$	3 MHz
	0	1	0	0	X	X	X	X	$f_{CLK}/2^4$	1.5 MHz
	0	1	0	1	X	X	X	X	$f_{CLK}/2^5$	750 kHz
	0	1	1	0	X	X	X	X	$f_{CLK}/2^6$	375 kHz
	0	1	1	1	X	X	X	X	$f_{CLK}/2^7$	187.5 kHz
	1	0	0	0	X	X	X	X	$f_{CLK}/2^8$	93.8 kHz
	1	0	0	1	X	X	X	X	$f_{CLK}/2^9$	46.9 kHz
	1	0	1	0	X	X	X	X	$f_{CLK}/2^{10}$	23.4 kHz
	1	0	1	1	X	X	X	X	$f_{CLK}/2^{11}$	11.7 kHz
Other than above									Setting prohibited	

Note When changing the clock selected for f_{CLK} (by changing the system clock control register (CKC) value), do so after having stopped (serial channel stop register m (STm) = 000FH) the operation of the serial array unit (SAU).

Remarks 1. X: Don't care

2. m: Unit number (m = 0), n: Channel number (n = 0, 2), mn = 00, 02

Here is an example of setting an I²C transfer rate where f_{MCK} = f_{CLK} = 24 MHz.

I²C Transfer Mode (Desired Transfer Rate)	f_{CLK} = 24 MHz			
	Operation Clock (f_{MCK})	SDRmn[15:9]	Calculated Transfer Rate	Error from Desired Transfer Rate
100 kHz	$f_{CLK}/2$	59	100 kHz	0.0%
400 kHz	f_{CLK}	29	380 kHz	5.0% Note
1 MHz	f_{CLK}	5	0.84 MHz	16.0% Note

Note The error cannot be set to about 0% because the duty ratio of the SCL signal is 50%.

14.8.6 Procedure for processing errors that occurred during simplified I²C (IIC00, IIC10) communication

The procedure for processing errors that occurred during simplified I²C (IIC00, IIC10) communication is described in Figures 14-115 and 14-116.

Figure 14-115. Processing Procedure in Case of Overrun Error

Software manipulation	Hardware status	Remark
Reads serial data register mn (SDRmn). →	The BFFmn bit of the SSRmn register is set to 0 and channel n is enabled to receive data.	This is to prevent an overrun error if the next reception is completed during error processing.
Reads serial status register mn (SSRmn).		The error type is identified and the read value is used to clear the error flag.
Writes 1 to serial flag clear trigger register mn (SIRmn). →	The error flag is cleared.	The error only during reading can be cleared, by writing the value read from the SSRmn register to the SIRmn register without modification.

Figure 14-116. Processing Procedure in Case of Parity Error (ACK error) in Simplified I²C Mode

Software manipulation	Hardware status	Remark
Reads serial data register mn (SDRmn). →	The BFFmn bit of the SSRmn register is set to 0 and channel n is enabled to receive data.	This is to prevent an overrun error if the next reception is completed during error processing.
Reads serial status register mn (SSRmn).		Error type is identified and the read value is used to clear error flag.
Writes serial flag clear trigger register mn (SIRmn). →	Error flag is cleared.	Error can be cleared only during reading, by writing the value read from the SSRmn register to the SIRmn register without modification.
Sets the STmn bit of serial channel stop register m (STm) to 1. →	The SEmn bit of serial channel enable status register m (SEm) is set to 0 and channel n stops operation.	Slave is not ready for reception because ACK is not returned. Therefore, a stop condition is created, the bus is released, and communication is started again from the start condition. Or, a restart condition is generated and transmission can be redone from address transmission.
Creates stop condition.		
Creates start condition.		
Sets the SSmn bit of serial channel start register m (SSm) to 1. →	The SEmn bit of serial channel enable status register m (SEm) is set to 1 and channel n is enabled to operate.	

Remark m: Unit number (m = 0), n: Channel number (n = 0, 2), r: IIC number (r = 00, 10), mn = 00, 02

CHAPTER 15 SERIAL INTERFACE IICA

15.1 Functions of Serial Interface IICA

Serial interface IICA has the following three modes.

(1) Operation stop mode

This mode is used when serial transfers are not performed. It can therefore be used to reduce power consumption.

(2) I^2C bus mode (multimaster supported)

This mode is used for 8-bit data transfers with several devices via two lines: a serial clock (SCLAn) line and a serial data bus (SDAAn) line.

This mode complies with the I^2C bus format and the master device can generated “start condition”, “address”, “transfer direction specification”, “data”, and “stop condition” data to the slave device, via the serial data bus. The slave device automatically detects these received status and data by hardware. This function can simplify the part of application program that controls the I^2C bus.

Since the SCLAn and SDAAn pins are used for open drain outputs, serial interface IICA requires pull-up resistors for the serial clock line and the serial data bus line.

(3) Wakeup mode

The STOP mode can be released by generating an interrupt request signal (INTIICAn) when an extension code from the master device or a local address has been received while in STOP mode. This can be set by using the WUPn bit of IICA control register n1 (IICCTLn1).

Figure 15-1 shows a block diagram of serial interface IICA.

Remark n = 0

Figure 15-1. Block Diagram of Serial Interface IICA0

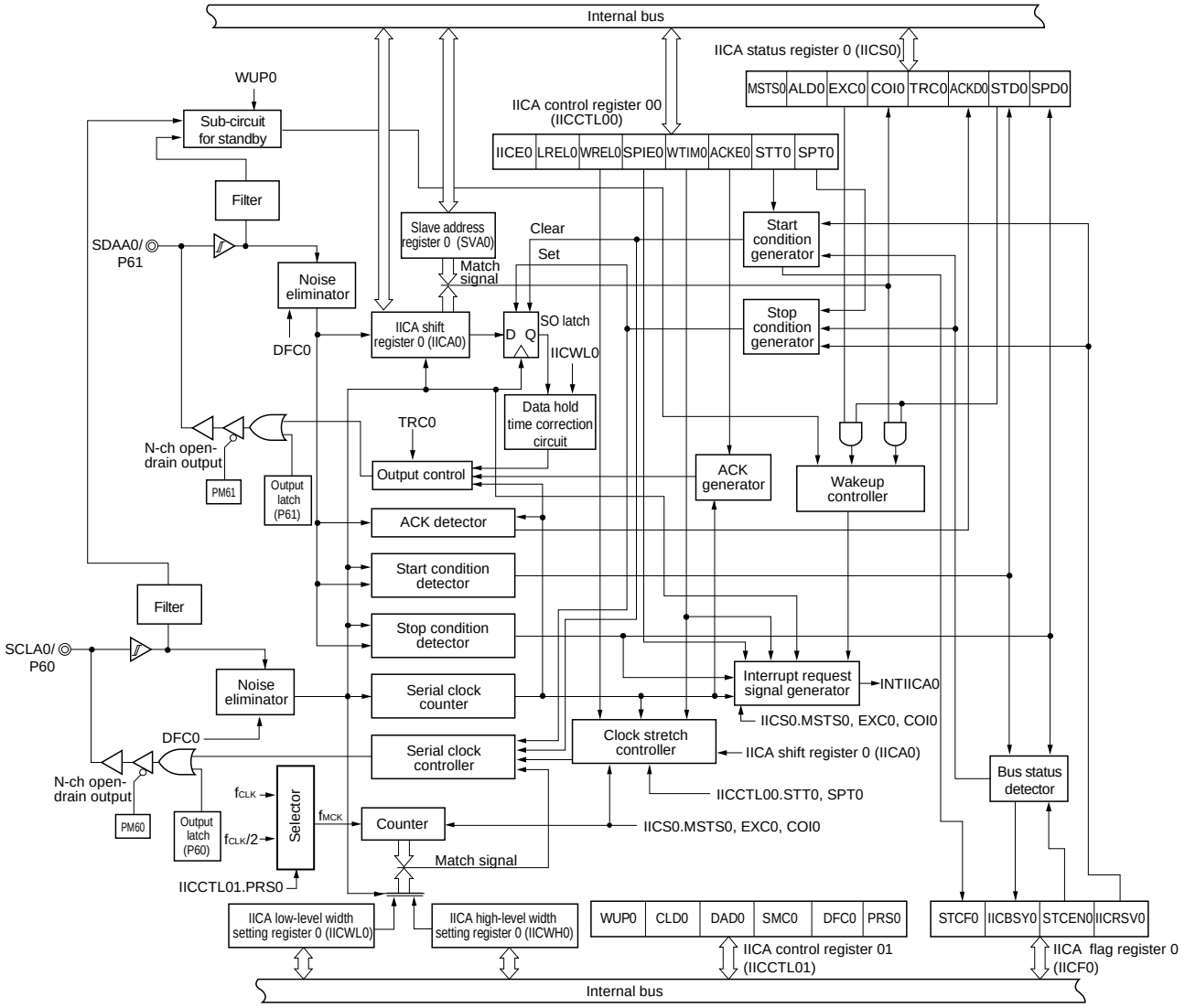

Figure 15-2 shows a serial bus configuration example.

Figure 15-2. Serial Bus Configuration Example Using I²C Bus

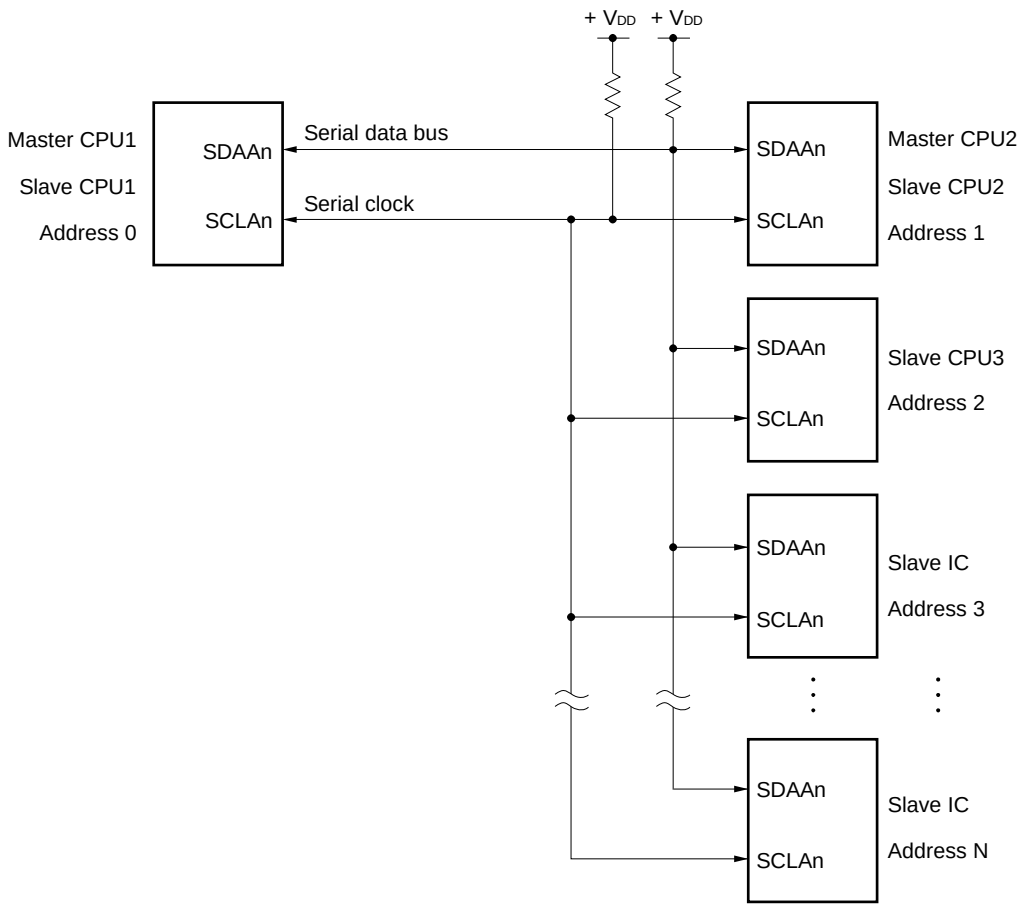

Remark n = 0

15.2 Configuration of Serial Interface IICA

Serial interface IICA includes the following hardware.

Table 15-1. Configuration of Serial Interface IICA

Item	Configuration
Registers	IICA shift register n (IICAn) Slave address register n (SVAn)
Control registers	Peripheral enable register 0 (PER0) IICA control register n0 (IICCTLn0) IICA status register n (IICSn) IICA flag register n (IICFn) IICA control register n1 (IICCTLn1) IICA low-level width setting register n (IICWLn) IICA high-level width setting register n (IICWHn) Port mode register 6 (PM6) Port register 6 (P6)

Remark n = 0

(1) IICA shift register n (IICAn)

The IICAn register is used to convert 8-bit serial data to 8-bit parallel data and vice versa in synchronization with the serial clock. The IICAn register can be used for both transmission and reception.

The actual transmit and receive operations can be controlled by writing and reading operations to the IICAn register. Cancel the clock stretch state and start data transfer by writing data to the IICAn register during the clock stretch period.

The IICAn register can be set by an 8-bit memory manipulation instruction.

Reset signal generation clears IICAn to 00H.

Figure 15-3. Format of IICA Shift Register n (IICAn)

Address: FFF50H After reset: 00H R/W

Symbol	7	6	5	4	3	2	1	0
IICAn								

Cautions 1. Do not write data to the IICAn register during data transfer.

2. Write or read the IICAn register only during the clock stretch period. Accessing the IICAn register in a communication state other than during the clock stretch period is prohibited. When the device serves as the master, however, the IICAn register can be written only once after the communication trigger bit (STTn) is set to 1.

3. When communication is reserved, write data to the IICAn register after the interrupt triggered by a stop condition is detected.

Remark n = 0

(2) Slave address register n (SVAn)

This register stores seven bits of local addresses {A6, A5, A4, A3, A2, A1, A0} when in slave mode.

The SVAn register can be set by an 8-bit memory manipulation instruction.

However, rewriting to this register is prohibited while STDn = 1 (while the start condition is detected).

Reset signal generation clears the SVAn register to 00H.

Figure 15-4. Format of Slave Address Register n (SVAn)

Address: F0234H After reset: 00H R/W

Symbol	7	6	5	4	3	2	1	0
SVAn	A6	A5	A4	A3	A2	A1	A0	0[Note]

Note Bit 0 is fixed to 0.

(3) SO latch

The SO latch is used to retain the SDAAn pin's output level.

(4) Wakeup controller

This circuit generates an interrupt request (INTIICAn) when the address received by this register matches the address value set to the slave address register n (SVAn) or when an extension code is received.

(5) Serial clock counter

This counter counts the serial clocks that are output or input during transmit/receive operations and is used to verify that 8-bit data was transmitted or received.

(6) Interrupt request signal generator

This circuit controls the generation of interrupt request signals (INTIICAn).

An I^2C interrupt request is generated by the following two triggers.

- Falling edge of eighth or ninth clock of the serial clock (set by the WTIMn bit)
- Interrupt request generated when a stop condition is detected (set by the SPIEn bit)

Remark WTIMn bit: Bit 3 of IICA control register n0 (IICCTLn0)
SPIEn bit: Bit 4 of IICA control register n0 (IICCTLn0)

(7) Serial clock controller

In master mode, this circuit generates the clock output via the SCLAn pin from a sampling clock.

(8) Clock stretch controller

This circuit controls the timing of clock stretching.

(9) ACK generator, stop condition detector, start condition detector, and ACK detector

These circuits generate and detect each status.

(10) Data hold time correction circuit

This circuit generates the hold time for data corresponding to the falling edge of the serial clock.

Remark n = 0

(11) Start condition generator

This circuit generates a start condition when the STTn bit is set to 1.

However, in the communication reservation disabled status (IICRSVn bit = 1), when the bus is not released (IICBSYn bit = 1), start condition requests are ignored and the STCFn bit is set to 1.

(12) Stop condition generator

This circuit generates a stop condition when the SPTn bit is set to 1.

(13) Bus status detector

This circuit detects whether or not the bus is released by detecting start conditions and stop conditions.

However, as the bus status cannot be detected immediately following operation, the initial status is set by the STCENn bit.

Remarks 1. STTn bit: Bit 1 of IICA control register n0 (IICCTLn0)
SPTn bit: Bit 0 of IICA control register n0 (IICCTLn0)
IICRSVn bit: Bit 0 of IICA flag register n (IICFn)
IICBSYn bit: Bit 6 of IICA flag register n (IICFn)
STCFn bit: Bit 7 of IICA flag register n (IICFn)
STCENn bit: Bit 1 of IICA flag register n (IICFn)

2. n = 0

15.3 Registers Controlling Serial Interface IICA

Serial interface IICA is controlled by the following eight registers.

- Peripheral enable register 0 (PER0)
- IICA control register n0 (IICCTLn0)
- IICA flag register n (IICFn)
- IICA status register n (IICSn)
- IICA control register n1 (IICCTLn1)
- IICA low-level width setting register n (IICWLn)
- IICA high-level width setting register n (IICWHn)
- Port mode register 6 (PM6)
- Port register 6 (P6)

Remark n = 0

15.3.1 Peripheral enable register 0 (PER0)

This register is used to enable or disable supplying the clock to the peripheral hardware. Clock supply to a hardware macro that is not used is stopped in order to reduce the power consumption and noise.

When serial interface IICAn is used, be sure to set bit 4 (IICA0EN) of this register to 1.

The PER0 register can be set by a 1-bit or 8-bit memory manipulation instruction.

Reset signal generation clears this register to 00H.

Figure 15-5. Format of Peripheral Enable Register 0 (PER0)

Address: F00F0H After reset: 00H R/W

Symbol	<7>	6	<5>	<4>	<3>	<2>	1	<0>
PER0	RTCWEN	0	ADCEN	IICA0EN	SAU1EN	SAU0EN	0	TAU0EN

IICAnEN	Control of serial interface IICAn input clock supply
0	Stops input clock supply. ● SFR used by serial interface IICAn cannot be written. ● Serial interface IICAn is in the reset status.
1	Enables input clock supply. ● SFR used by serial interface IICAn can be read/written.

Cautions 1. When setting serial interface IICA, be sure to set the following registers first while the IICAnEN bit is set to 1. If IICAnEN = 0, the control registers of serial interface IICA are set to their initial values, and writing to them is ignored (except for port mode register 6 (PM6) and port register 6 (P6)).

- **IICA control register n0 (IICCTLn0)**
- **IICA flag register n (IICFn)**
- **IICA status register n (IICSn)**
- **IICA control register n1 (IICCTLn1)**
- **IICA low-level width setting register n (IICWLn)**
- **IICA high-level width setting register n (IICWHn)**
- <R> **IICA shift register n (IICAn)**
- **Slave address register n (SVAn)**

2. Be sure to clear bits 1, 6 to 0.

Remark n = 0

15.3.2 IICA control register n0 (IICCTLn0)

This register is used to enable/stop I^2C operations, set clock stretching timing, and set other I^2C operations.

The IICCTLn0 register can be set by a 1-bit or 8-bit memory manipulation instruction. However, set the SPIEn, WTIMn, and ACKEn bits while IICEn = 0 or during the clock stretch period. These bits can be set at the same time when the IICEn bit is set from “0” to “1”.

Reset signal generation clears this register to 00H.

Remark n = 0

Figure 15-6. Format of IICA Control Register n0 (IICCTLn0) (1/4)

Address: F0230H After reset: 00H R/W

Symbol	<7>	<6>	<5>	<4>	<3>	<2>	<1>	<0>
IICCTLn0	IICEn	LRELn	WRELn	SPIEn	WTIMn	ACKEn	STTn	SPTn

IICEn	I^2C operation enable
0	Stop operation. Reset the IICA status register n (IICSn)[Note 1]. Stop internal operation.
1	Enable operation.
Be sure to set this bit (1) while the SCLAn and SDAAn lines are at high level.	
Condition for clearing (IICEn = 0)	Condition for setting (IICEn = 1)
● Cleared by instruction ● Reset	● Set by instruction

LRELn[Notes 2, 3]	Exit from communications
0	Normal operation
1	This exits from the current communications and sets standby mode. This setting is automatically cleared to 0 after being executed. Its uses include cases in which a locally irrelevant extension code has been received. The SCLAn and SDAAn lines are set to high impedance. The following flags of IICA control register n0 (IICCTLn0) and the IICA status register n (IICSn) are cleared to 0. ● STTn ● SPTn ● MSTSn ● EXCn ● COIn ● TRCn ● ACKDn ● STDn
The standby mode following exit from communications remains in effect until the following communications entry conditions are met. ● After a stop condition is detected, restart is in master mode. ● An address match or extension code reception occurs after the start condition.	
Condition for clearing (LRELn = 0)	Condition for setting (LRELn = 1)
● Automatically cleared after execution ● Reset	● Set by instruction

WRELn[Notes 2, 3]	Clock stretching cancellation
0	Do not cancel clock stretching
1	Cancel clock stretching. This setting is automatically cleared after clock stretching is canceled.
When the WRELn bit is set (clock stretching canceled) during the clock stretch period at the ninth clock pulse in the transmission status (TRCn = 1), the SDAAn line goes into the high impedance state (TRCn = 0).	
Condition for clearing (WRELn = 0)	Condition for setting (WRELn = 1)
● Automatically cleared after execution ● Reset	● Set by instruction

Notes 1. The IICA status register n (IICSn), the STCFn and IICBSYn bits of the IICA flag register n (IICFn), and the CLDn and DADn bits of IICA control register n1 (IICCTLn1) are reset.

2. The signal of this bit is invalid while IICEn is 0.

3. When the LRELn and WRELn bits are read, 0 is always read.

Caution **If the operation of I^2C is enabled (IICEn = 1) when the SCLAn line is high level, the SDAAn line is low level, and the digital filter is turned on (DFCn bit of IICCTLn1 register = 1), a start condition will be inadvertently detected immediately. In this case, set (1) the LRELn bit by using a 1-bit memory manipulation instruction immediately after enabling operation of I^2C (IICEn = 1).**

Remark n = 0

Figure 15-6. Format of IICA Control Register n0 (IICCTLn0) (2/4)

SPIEn[Note 1]	Enable/disable generation of interrupt request when stop condition is detected
0	Disable
1	Enable
If the WUPn bit of IICA control register n1 (IICCTLn1) is 1, no stop condition interrupt will be generated even if SPIEn = 1.	
Condition for clearing (SPIEn = 0)	Condition for setting (SPIEn = 1)
● Cleared by instruction ● Reset	● Set by instruction

WTIMn[Note 1]	Control of clock stretching and interrupt request generation
0	Interrupt request is generated at the eighth clock's falling edge. Master mode: After output of eight clocks, clock output is set to low level and clock stretching is set. Slave mode: After input of eight clocks, the clock is set to low level and clock stretching is set for master device.
1	Interrupt request is generated at the ninth clock's falling edge. Master mode: After output of nine clocks, clock output is set to low level and clock stretching is set. Slave mode: After input of nine clocks, the clock is set to low level and clock stretching is set for master device.
An interrupt is generated at the falling edge of the ninth clock during address transfer independently of the setting of this bit. The setting of this bit is valid when the address transfer is completed. When in master mode, a clock stretching is inserted at the falling edge of the ninth clock during address transfers. For a slave device that has received a local address, a clock stretching is inserted at the falling edge of the ninth clock after an acknowledge (ACK) is issued. However, when the slave device has received an extension code, a clock stretching is inserted at the falling edge of the eighth clock.	
Condition for clearing (WTIMn = 0)	Condition for setting (WTIMn = 1)
● Cleared by instruction ● Reset	● Set by instruction

ACKEn[Notes 1, 2]	Acknowledgment control
0	Disable acknowledgment.
1	Enable acknowledgment. During the ninth clock period, the SDAAn line is set to low level.
Condition for clearing (ACKEn = 0)	Condition for setting (ACKEn = 1)
● Cleared by instruction ● Reset	● Set by instruction

Notes 1. The signal of this bit is invalid while IICEn is 0. Set this bit during that period.

2. The set value is invalid during address transfer and if the code is not an extension code.
When the device serves as a slave and the addresses match, an acknowledgment is generated regardless of the set value.

Remark n = 0

Figure 15-6. Format of IICA Control Register n0 (IICCTLn0) (3/4)

STTn[Notes 1, 2]	Start condition trigger
0	Do not generate a start condition.
1	When bus is released (in standby state, when IICBSYn = 0): If this bit is set (1), a start condition is generated (startup as the master). When a third party is communicating: ● When communication reservation function is enabled (IICRSVn = 0) Functions as the start condition reservation flag. When set to 1, automatically generates a start condition after the bus is released. ● When communication reservation function is disabled (IICRSVn = 1) Even if this bit is set (1), the STTn bit is cleared and the STTn clear flag (STCFn) is set (1). No start condition is generated. In the clock stretch state (when master device): Generates a restart condition after releasing the clock stretching.

Cautions concerning set timing

- For master reception: Cannot be set to 1 during transfer. Can be set to 1 only in the clock stretch period when the ACKEn bit has been cleared to 0 and slave has been notified of final reception.
- For master transmission: A start condition cannot be generated normally during the acknowledge period. Set to 1 during the clock stretch period that follows output of the ninth clock.
- Cannot be set to 1 at the same time as stop condition trigger (SPTn).
- Once STTn is set (1), setting it again (1) before the clear condition is met is not allowed.

Condition for clearing (STTn = 0)	Condition for setting (STTn = 1)
● Cleared by setting the STTn bit to 1 while communication reservation is prohibited. ● Cleared by loss in arbitration ● Cleared after start condition is generated by master device ● Cleared by LRELn = 1 (exit from communications) ● When IICEn = 0 (operation stop) ● Reset	● Set by instruction

Notes 1. The signal of this bit is invalid while IICEn is 0.

2. The STTn bit is always read as 0.

Remarks 1. Bit 1 (STTn) becomes 0 when it is read after data setting.

2. IICRSVn: Bit 0 of IIC flag register n (IICFn)

STCFn: Bit 7 of IIC flag register n (IICFn)

3. n = 0

Figure 15-6. Format of IICA Control Register n0 (IICCTLn0) (4/4)

SPTn[Note]	Stop condition trigger
0	Stop condition is not generated.
1	Stop condition is generated (termination of master device's transfer).

Cautions concerning set timing

- For master reception: Cannot be set to 1 during transfer.
  Can be set to 1 only in the clock stretch period when the ACKEn bit has been cleared to 0 and slave has been notified of final reception.
- For master transmission: A stop condition cannot be generated normally during the acknowledge period.
  Therefore, set it during the clock stretch period that follows output of the ninth clock.
- Cannot be set to 1 at the same time as start condition trigger (STTn).
- The SPTn bit can be set to 1 only when in master mode.
- When the WTIMn bit has been cleared to 0, if the SPTn bit is set to 1 during the clock stretch period that follows output of eight clocks, note that a stop condition will be generated during the high-level period of the ninth clock. The WTIMn bit should be changed from 0 to 1 during the clock stretch period following the output of eight clocks, and the SPTn bit should be set to 1 during the clock stretch period that follows the output of the ninth clock.
- Once SPTn is set (1), setting it again (1) before the clear condition is met is not allowed.

Condition for clearing (SPTn = 0)	Condition for setting (SPTn = 1)
● Cleared by loss in arbitration ● Automatically cleared after stop condition is detected ● Cleared by LRELn = 1 (exit from communications) ● When IICEn = 0 (operation stop) ● Reset	● Set by instruction

Note The STTn bit is always read as 0.

Caution **When bit 3 (TRCn) of the IICA status register n (IICSn) is set to 1 (transmission status), bit 5 (WRELn) of IICA control register n0 (IICCTLn0) is set to 1 during the ninth clock and clock stretching is canceled, after which the TRCn bit is cleared (reception status) and the SDAAn line is set to high impedance. Release the clock stretching performed while the TRCn bit is 1 (transmission status) by writing to the IICA shift register n.**

Remarks **1.** Bit 0 (SPTn) becomes 0 when it is read after data setting.
2. n = 0

15.3.3 IICA status register n (IICSn)

This register indicates the status of I²C.

The IICSn register is read by a 1-bit or 8-bit memory manipulation instruction only when STTn = 1 and during the clock stretch period.

Reset signal generation clears this register to 00H.

Caution Reading the IICSn register while the address match wakeup function is enabled (WUPn = 1) in STOP mode is prohibited. When the WUPn bit is changed from 1 to 0 (wakeup operation is stopped), regardless of the INTIICAn interrupt request, the change in status is not reflected until the next start condition or stop condition is detected. To use the wakeup function, therefore, enable (SPIEn = 1) the interrupt generated by detecting a stop condition and read the IICSn register after the interrupt has been detected.

Remark STTn: bit 1 of IICA control register n0 (IICCTLn0)
WUPn: bit 7 of IICA control register n1 (IICCTLn1)

Figure 15-7. Format of IICA Status Register n (IICSn) (1/3)

Address: FFF51H After reset: 00H R

Symbol	<7>	<6>	<5>	<4>	<3>	<2>	<1>	<0>
IICSn	MSTSn	ALDn	EXCn	COIn	TRCn	ACKDn	STDn	SPDn

MSTSn	Master status check flag
0	Slave device status or communication standby status
1	Master device communication status

Condition for clearing (MSTSn = 0)	Condition for setting (MSTSn = 1)
● When a stop condition is detected ● When ALDn = 1 (arbitration loss) ● Cleared by LRELn = 1 (exit from communications) ● When the IICEn bit changes from 1 to 0 (operation stop) ● Reset	● When a start condition is generated

ALDn	Detection of arbitration loss
0	This status means either that there was no arbitration or that the arbitration result was a “win”.
1	This status indicates the arbitration result was a “loss”. The MSTSn bit is cleared.

Condition for clearing (ALDn = 0)	Condition for setting (ALDn = 1)
● Automatically cleared after the IICSn register is read[Note] ● When the IICEn bit changes from 1 to 0 (operation stop) ● Reset	● When the arbitration result is a “loss”.

Note This register is also cleared when a 1-bit memory manipulation instruction is executed for bits other than the IICSn register. Therefore, when using the ALDn bit, read the data of this bit before the data of the other bits.

Remarks 1. LRELn: Bit 6 of IICA control register n0 (IICCTLn0)
IICEn: Bit 7 of IICA control register n0 (IICCTLn0)

2. n = 0

Figure 15-7. Format of IICA Status Register n (IICSn) (2/3)

EXCn	Detection of extension code reception
0	Extension code was not received.
1	Extension code was received.

Condition for clearing (EXCn = 0)	Condition for setting (EXCn = 1)
● When a start condition is detected ● When a stop condition is detected ● Cleared by LRELn = 1 (exit from communications) ● When the IICEn bit changes from 1 to 0 (operation stop) ● Reset	● When the higher four bits of the received address data is either “0000” or “1111” (set at the rising edge of the eighth clock).

COIn	Detection of matching addresses
0	Addresses do not match.
1	Addresses match.

Condition for clearing (COIn = 0)	Condition for setting (COIn = 1)
● When a start condition is detected ● When a stop condition is detected ● Cleared by LRELn = 1 (exit from communications) ● When the IICEn bit changes from 1 to 0 (operation stop) ● Reset	● When the received address matches the local address (slave address register n (SVAn)) (set at the rising edge of the eighth clock).

TRCn	Detection of transmit/receive status
0	Receive status (other than transmit status). The SDAAn line is set for high impedance.
1	Transmit status. The value in the SOn latch is enabled for output to the SDAAn line (valid starting at the falling edge of the first byte’s ninth clock).

Condition for clearing (TRCn = 0)	Condition for setting (TRCn = 1)
<Both master and slave> ● When a stop condition is detected ● Cleared by LRELn = 1 (exit from communications) ● When the IICEn bit changes from 1 to 0 (operation stop) ● Cleared by WRELn = 1[Note] (clock stretching cancel) ● When the ALDn bit changes from 0 to 1 (arbitration loss) ● Reset ● When not used for communication (MSTSn, EXCn, COIn = 0) <Master> ● When “1” is output to the first byte’s LSB (transfer direction specification bit) <Slave> ● When a start condition is detected ● When “0” is input to the first byte’s LSB (transfer direction specification bit)	<Master> ● When a start condition is generated ● When 0 (master transmission) is output to the LSB (transfer direction specification bit) of the first byte (during address transfer) <Slave> ● When 1 (slave transmission) is input to the LSB (transfer direction specification bit) of the first byte from the master (during address transfer)

Note When bit 3 (TRCn) of the IICA status register n (IICSn) is set to 1 (transmission status), bit 5 (WRELn) of IICA control register n0 (IICCTLn0) is set to 1 during the ninth clock and clock stretching is canceled, after which the TRCn bit is cleared (reception status) and the SDAAn line is set to high impedance. Release the clock stretching performed while the TRCn bit is 1 (transmission status) by writing to the IICA shift register n.

Remarks 1. LRELn: Bit 6 of IICA control register n0 (IICCTLn0)
IICEn: Bit 7 of IICA control register n0 (IICCTLn0)

2. n = 0

Figure 15-7. Format of IICA Status Register n (IICSn) (3/3)

ACKDn	Detection of acknowledge (ACK)
0	Acknowledge was not detected.
1	Acknowledge was detected.

Condition for clearing (ACKDn = 0)	Condition for setting (ACKDn = 1)
● When a stop condition is detected ● At the rising edge of the next byte's first clock ● Cleared by LRELn = 1 (exit from communications) ● When the IICEn bit changes from 1 to 0 (operation stop) ● Reset	● After the SDAAn line is set to low level at the rising edge of SCLAn line's ninth clock

STDn	Detection of start condition
0	Start condition was not detected.
1	Start condition was detected. This indicates that the address transfer period is in effect.

Condition for clearing (STDn = 0)	Condition for setting (STDn = 1)
● When a stop condition is detected ● At the rising edge of the next byte's first clock following address transfer ● Cleared by LRELn = 1 (exit from communications) ● When the IICEn bit changes from 1 to 0 (operation stop) ● Reset	● When a start condition is detected

SPDn	Detection of stop condition
0	Stop condition was not detected.
1	Stop condition was detected. The master device's communication is terminated and the bus is released.

Condition for clearing (SPDn = 0)	Condition for setting (SPDn = 1)
● At the rising edge of the address transfer byte's first clock following setting of this bit and detection of a start condition ● When the WUPn bit changes from 1 to 0 ● When the IICEn bit changes from 1 to 0 (operation stop) ● Reset	● When a stop condition is detected

Remarks 1. LRELn: Bit 6 of IICA control register n0 (IICCTLn0)
IICEn: Bit 7 of IICA control register n0 (IICCTLn0)
2. n = 0

15.3.4 IICA flag register n (IICFn)

This register sets the operation mode of I^2C and indicates the status of the I^2C bus.

The IICFn register can be set by a 1-bit or 8-bit memory manipulation instruction. However, the STTn clear flag (STCFn) and I^2C bus status flag (IICBSYn) bits are read-only.

The IICRSVn bit can be used to enable/disable the communication reservation function.

The STCENn bit can be used to set the initial value of the IICBSYn bit.

The IICRSVn and STCENn bits can be written only when the operation of I^2C is disabled (bit 7 (IICEn) of IICA control register n0 (IICCTLn0) = 0). When operation is enabled, the IICFn register can be read.

Reset signal generation clears this register to 00H.

Figure 15-8. Format of IICA Flag Register n (IICFn)

Address: FFF52H After reset: 00H R/W[Note]

Symbol	<7>	<6>	5	4	3	2	<1>	<0>
IICFn	STCFn	IICBSYn	0	0	0	0	STCENn	IICRSVn

STCFn	STTn clear flag
0	Generate start condition
1	Start condition generation unsuccessful: clear the STTn flag

Condition for clearing (STCFn = 0)	Condition for setting (STCFn = 1)
● Cleared by STTn = 1 ● When IICEn = 0 (operation stop) ● Reset	● Generating start condition unsuccessful and the STTn bit cleared to 0 when communication reservation is disabled (IICRSVn = 1).

IICBSYn	I^2C bus status flag
0	Bus release status (communication initial status when STCENn = 1)
1	Bus communication status (communication initial status when STCENn = 0)

Condition for clearing (IICBSYn = 0)	Condition for setting (IICBSYn = 1)
● Detection of stop condition ● When IICEn = 0 (operation stop) ● Reset	● Detection of start condition ● Setting of the IICEn bit when STCENn = 0

STCENn	Initial start enable trigger
0	After operation is enabled (IICEn = 1), enable generation of a start condition upon detection of a stop condition.
1	After operation is enabled (IICEn = 1), enable generation of a start condition without detecting a stop condition.

Condition for clearing (STCENn = 0)	Condition for setting (STCENn = 1)
● Cleared by instruction ● Detection of start condition ● Reset	● Set by instruction

IICRSVn	Communication reservation function disable bit
0	Enable communication reservation
1	Disable communication reservation

Condition for clearing (IICRSVn = 0)	Condition for setting (IICRSVn = 1)
● Cleared by instruction ● Reset	● Set by instruction

Note Bits 6 and 7 are read-only.

Cautions 1. Write to the STCENn bit only when the operation is stopped (IICEn = 0).

2. As the bus release status (IICBSYn = 0) is recognized regardless of the actual bus status when STCENn = 1, when generating the first start condition (STTn = 1), it is necessary to verify that no third party communications are in progress in order to prevent such communications from being destroyed.

3. Write to IICRSVn only when the operation is stopped (IICEn = 0).

Remarks 1. STTn: Bit 1 of IICA control register n0 (IICCTLn0)
IICEn: Bit 7 of IICA control register n0 (IICCTLn0)

2. n = 0

15.3.5 IICA control register n1 (IICCTLn1)

This register is used to set the operation mode of I²C and detect the statuses of the SCLAn and SDAAn pins.

The IICCTLn1 register can be set by a 1-bit or 8-bit memory manipulation instruction. However, the CLDn and DADn bits are read-only.

Set the IICCTLn1 register, except the WUPn bit, while operation of I²C is disabled (bit 7 (IICEn) of IICA control register n0 (IICCTLn0) is 0).

Reset signal generation clears this register to 00H.

Figure 15-9. Format of IICA Control Register n1 (IICCTLn1) (1/2)

Address: F0231H After reset: 00H R/W[Note 1]

Symbol	<7>	6	<5>	<4>	<3>	<2>	1	<0>
IICCTLn1	WUPn	0	CLDn	DADn	SMCn	DFCn	0	PRSn

WUPn	Control of address match wakeup
0	Stops operation of address match wakeup function in STOP mode.
1	Enables operation of address match wakeup function in STOP mode.

To shift to STOP mode when WUPn = 1, execute the STOP instruction at least three clocks of f_{MCK} after setting (1) the WUPn bit (see **Figure 15-22 Flow When Setting WUPn = 1**).
Clear (0) the WUPn bit after the address has matched or an extension code has been received. The subsequent communication can be entered by the clearing (0) WUPn bit. (The clock stretching must be released and transmit data must be written after the WUPn bit has been cleared (0).)
The interrupt timing when the address has matched or when an extension code has been received, while WUPn = 1, is identical to the interrupt timing when WUPn = 0. (A delay of the difference of sampling by the clock will occur.) Furthermore, when WUPn = 1, a stop condition interrupt is not generated even if the SPIEn bit is set to 1.

Condition for clearing (WUPn = 0)	Condition for setting (WUPn = 1)
● Cleared by instruction (after address match or extension code reception)	● Set by instruction (when the MSTSn, EXCn, and COIn bits are “0”, and the STDn bit also “0” (communication not entered))[Note 2]

Notes 1. Bits 4 and 5 are read-only.

2. The status of the IICA status register n (IICSn) must be checked and the WUPn bit must be set during the period shown below.

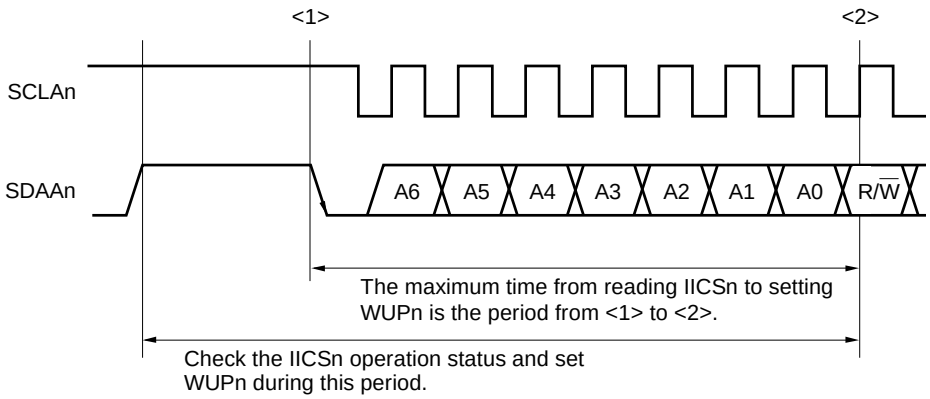

Remark n = 0

Figure 15-9. Format of IICA Control Register n1 (IICCTLn1) (2/2)

CLDn	Detection of SCLAn pin level (valid only when IICEn = 1)
0	The SCLAn pin was detected at low level.
1	The SCLAn pin was detected at high level.
Condition for clearing (CLDn = 0)	Condition for setting (CLDn = 1)
● When the SCLAn pin is at low level ● When IICEn = 0 (operation stop) ● Reset	● When the SCLAn pin is at high level

DADn	Detection of SDAAn pin level (valid only when IICEn = 1)
0	The SDAAn pin was detected at low level.
1	The SDAAn pin was detected at high level.
Condition for clearing (DADn = 0)	Condition for setting (DADn = 1)
● When the SDAAn pin is at low level ● When IICEn = 0 (operation stop) ● Reset	● When the SDAAn pin is at high level

SMCn	Operation mode switching
0	Operates in standard mode (fastest transfer rate: 100 kbps).
1	Operates in fast mode (fastest transfer rate: 400 kbps) or fast mode plus (fastest transfer rate: 1 Mbps).

DFCn	Digital filter operation control
0	Digital filter off.
1	Digital filter on.
Digital filter can be used only in fast mode and fast mode plus. In fast mode and fast mode plus, the transfer clock does not vary, regardless of the DFCn bit being set (1) or cleared (0). The digital filter is used for noise elimination in fast mode and fast mode plus.	

PRSn	IICA operation clock (f_{MCK}) control
0	Selects f_{CLK} (1 MHz ≤ f_{CLK} ≤ 20 MHz)
1	Selects $f_{CLK}/2$ (20 MHz < f_{CLK})

Cautions 1. The fastest operation frequency of the IICA operation clock (f_{MCK}) is 20 MHz (Max.). Set bit 0 (PRSn) of the IICA control register n1 (IICCTLn1) to "1" only when the f_{CLK} exceeds 20 MHz.

2. Note the minimum f_{CLK} operation frequency when setting the transfer clock.
The minimum f_{CLK} operation frequency for serial interface IICA is determined according to the mode.
Fast mode: f_{CLK} = 3.5 MHz (MIN.)
Fast mode plus: f_{CLK} = 10 MHz (MIN.)
Normal mode: f_{CLK} = 1 MHz (MIN.)

3. The fast mode plus is only available in the products for A: Consumer applications (T_A = –40 °C to +85 °C).

Remarks 1. IICEn: Bit 7 of IICA control register n0 (IICCTLn0)
2. n = 0

15.3.6 IICA low-level width setting register n (IICWLn)

This register is used to set the low-level width (t_{LOW}) of the SCLAn pin signal that is output by serial interface IICA. The data hold time is decided by value the higher 6 bits of IICWL register.

The IICWLn register can be set by an 8-bit memory manipulation instruction.

Set the IICWLn register while operation of I^2C is disabled (bit 7 (IICEn) of IICA control register n0 (IICCTLn0) is 0).

Reset signal generation sets this register to FFH.

For details about setting the IICWLn register, see **15.4.2 Setting transfer clock by using IICWLn and IICWHn registers**.

The data hold time is one-quarter of the time set by the IICWLn register.

Figure 15-10. Format of IICA Low-Level Width Setting Register n (IICWLn)

Address: F0232H After reset: FFH R/W

Symbol	7	6	5	4	3	2	1	0
IICWLn								

15.3.7 IICA high-level width setting register n (IICWHn)

This register is used to set the high-level width of the SCLAn pin signal that is output by serial interface IICA.

The IICWHn register can be set by an 8-bit memory manipulation instruction.

Set the IICWHn register while operation of I^2C is disabled (bit 7 (IICEn) of IICA control register n0 (IICCTLn0) is 0).

Reset signal generation sets this register to FFH.

Figure 15-11. Format of IICA High-Level Width Setting Register n (IICWHn)

Address: F0233H After reset: FFH R/W

Symbol	7	6	5	4	3	2	1	0
IICWHn								

Remarks 1. For setting procedures of the transfer clock on master side and of the IICWLn and IICWHn registers on slave side, see **15.4.2 (1)** and **15.4.2 (2)**, respectively.

2. n = 0

15.3.8 Port mode register 6 (PM6)

This register sets the input/output of port 6 in 1-bit units.

When using the P60/SCLA0 pin as clock I/O and the P61/SDAA0 pin as serial data I/O, clear PM60 and PM61, and the output latches of P60 and P61 to 0.

Set the IICEn bit (bit 7 of IICA control register n0 (IICCTLn0)) to 1 before setting the output mode because the P60/SCLA0 and P61/SDAA0 pins output a low level (fixed) when the IICEn bit is 0.

The PM6 register can be set by a 1-bit or 8-bit memory manipulation instruction.

Reset signal generation sets this register to FFH.

Figure 15-12. Format of Port Mode Register 6 (PM6)

Address: FFF26H After reset: FFH R/W

Symbol	7	6	5	4	3	2	1	0
PM6	1	1	1	1	1	1	PM61	PM60

PM6n	P6n pin I/O mode selection (n = 0, 1)
0	Output mode (output buffer on)
1	Input mode (output buffer off)

15.4 I²C Bus Mode Functions

15.4.1 Pin configuration

The serial clock pin (SCLAn) and the serial data bus pin (SDAAn) are configured as follows.

(1) SCLAn .... This pin is used for serial clock input and output.
This pin is an N-ch open-drain output for both master and slave devices. Input is Schmitt input.

(2) SDAAn .... This pin is used for serial data input and output.
This pin is an N-ch open-drain output for both master and slave devices. Input is Schmitt input.

Since outputs from the serial clock line and the serial data bus line are N-ch open-drain outputs, an external pull-up resistor is required.

Figure 15-13. Pin Configuration Diagram

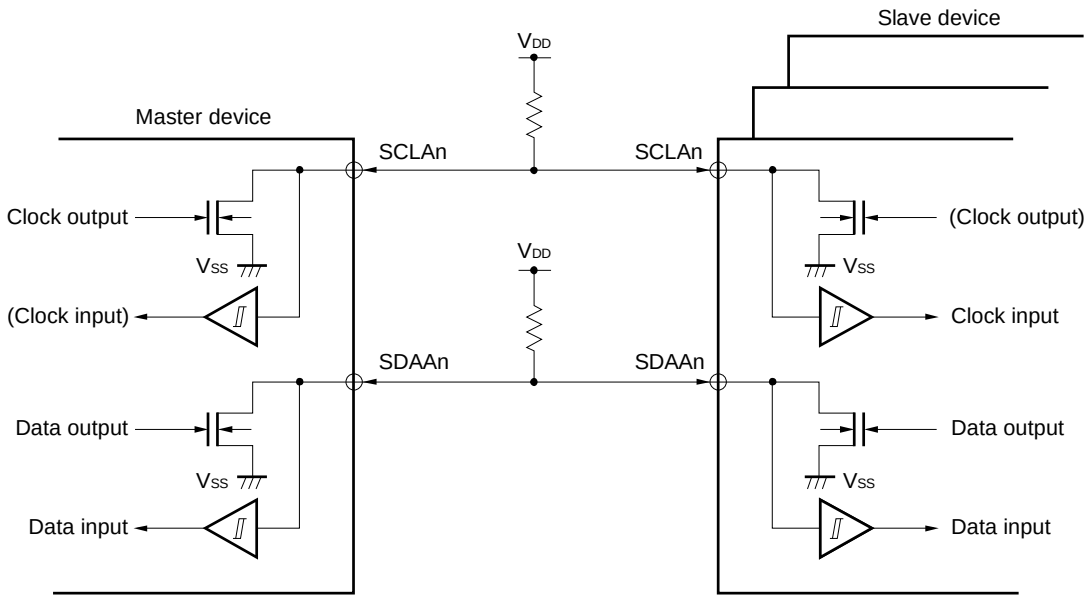

Remark n = 0

15.4.2 Setting transfer clock by using IICWLn and IICWHn registers

(1) Setting transfer clock on master side

$$\text{Transfer clock} = \frac{f_{MCK}}{IICWL0 + IICWH0 + f_{MCK}(t_R + t_F)}$$

At this time, the optimal setting values of the IICWLn and IICWHn registers are as follows.
(The fractional parts of all setting values are rounded up.)

● When the fast mode

$$IICWLn = \frac{0.52}{\text{Transfer clock}} \times f_{MCK}$$
$$IICWHn = \left(\frac{0.48}{\text{Transfer clock}} - t_R - t_F\right) \times f_{MCK}$$

● When the normal mode

$$IICWLn = \frac{0.47}{\text{Transfer clock}} \times f_{MCK}$$
$$IICWHn = \left(\frac{0.53}{\text{Transfer clock}} - t_R - t_F\right) \times f_{MCK}$$

● When the fast mode plus

$$IICWLn = \frac{0.50}{\text{Transfer clock}} \times f_{MCK}$$
$$IICWHn = \left(\frac{0.50}{\text{Transfer clock}} - t_R - t_F\right) \times f_{MCK}$$

(2) Setting IICWLn and IICWHn registers on slave side

(The fractional parts of all setting values are truncated.)

● When the fast mode

$$IICWLn = 1.3\ \mu s \times f_{MCK}$$
$$IICWHn = (1.2\ \mu s - t_R - t_F) \times f_{MCK}$$

● When the normal mode

$$IICWLn = 4.7\ \mu s \times f_{MCK}$$
$$IICWHn = (5.3\ \mu s - t_R - t_F) \times f_{MCK}$$

● When the fast mode plus

$$IICWLn = 0.50\ \mu s \times f_{MCK}$$
$$IICWHn = (0.50\ \mu s - t_R - t_F) \times f_{MCK}$$

(**Cautions** and **Remarks** are listed on the next page.)

Cautions 1. The fastest operation frequency of the IICA operation clock (f_{MCK}) is 20 MHz (Max.).
Set bit 0 (PRSn) of the IICA control register n1 (IICCTLn1) to "1" only when the f_{CLK} exceeds 20 MHz.

2. Note the minimum f_{CLK} operation frequency when setting the transfer clock. The minimum f_{CLK} operation frequency for serial interface IICA is determined according to the mode.

Fast mode: f_{CLK} = 3.5 MHz (MIN.)
Fast mode plus: f_{CLK} = 10 MHz (MIN.)
Normal mode: f_{CLK} = 1 MHz (MIN.)

Remarks 1. Calculate the rise time (t_R) and fall time (t_F) of the SDAAn and SCLAn signals separately, because they differ depending on the pull-up resistance and wire load.

2. IICWLn: IICA low-level width setting register n
IICWHn: IICA high-level width setting register n
t_F: SDAAn and SCLAn signal falling times
t_R: SDAAn and SCLAn signal rising times
f_{MCK}: IICA operation clock frequency

3. n = 0

15.5 I²C Bus Definitions and Control Methods

The following section describes the I²C bus's serial data communication format and the signals used by the I²C bus. Figure 15-14 shows the transfer timing for the "start condition", "address", "data", and "stop condition" output via the I²C bus's serial data bus.

Figure 15-14. I²C Bus Serial Data Transfer Timing

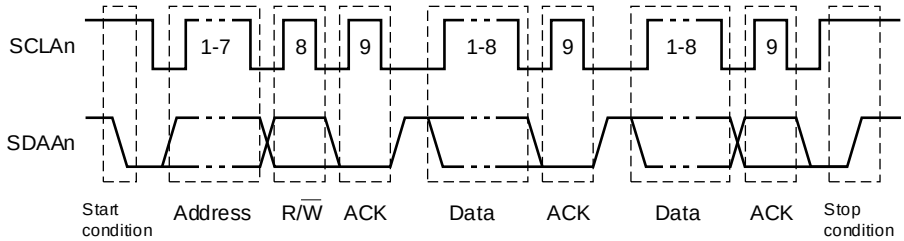

The master device generates the start condition, slave address, and stop condition.
The acknowledge (ACK) can be generated by either the master or slave device (normally, it is output by the device that receives 8-bit data).

The serial clock (SCLAn) is continuously output by the master device. However, in the slave device, the SCLAn pin low level period can be extended and a clock stretching can be inserted.

15.5.1 Start conditions

A start condition is met when the SCLAn pin is at high level and the SDAAn pin changes from high level to low level. The start conditions for the SCLAn pin and SDAAn pin are signals that the master device generates to the slave device when starting a serial transfer. When the device is used as a slave, start conditions can be detected.

Figure 15-15. Start Conditions

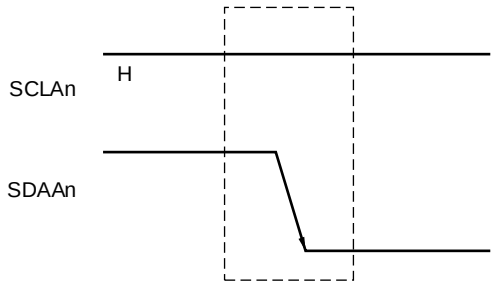

A start condition is output when bit 1 (STTn) of IICA control register n0 (IICCTLn0) is set (1) after a stop condition has been detected (SPDn: Bit 0 of the IICA status register n (IICSn) = 1). When a start condition is detected, bit 1 (STDn) of the IICSn register is set (1).

Remark n = 0

15.5.2 Addresses

The address is defined by the 7 bits of data that follow the start condition.

An address is a 7-bit data segment that is output in order to select one of the slave devices that are connected to the master device via the bus lines. Therefore, each slave device connected via the bus lines must have a unique address.

The slave devices include hardware that detects the start condition and checks whether or not the 7-bit address data matches the data values stored in the slave address register n (SVAn). If the address data matches the SVAn register values, the slave device is selected and communicates with the master device until the master device generates a start condition or stop condition.

Figure 15-16. Address

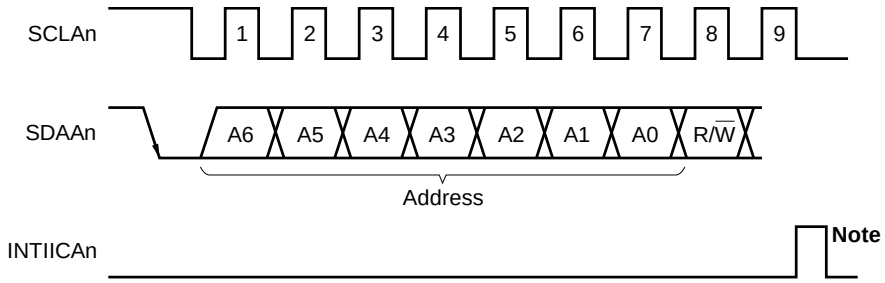

Note INTIICAn is not issued if data other than a local address or extension code is received during slave device operation.

Addresses are output when a total of 8 bits consisting of the slave address and the transfer direction described in **15.5.3 Transfer direction specification** are written to the IICA shift register n (IICAn). The received addresses are written to the IICAn register.

The slave address is assigned to the higher 7 bits of the IICAn register.

15.5.3 Transfer direction specification

In addition to the 7-bit address data, the master device sends 1 bit that specifies the transfer direction.

When this transfer direction specification bit has a value of “0”, it indicates that the master device is transmitting data to a slave device. When the transfer direction specification bit has a value of “1”, it indicates that the master device is receiving data from a slave device.

Figure 15-17. Transfer Direction Specification

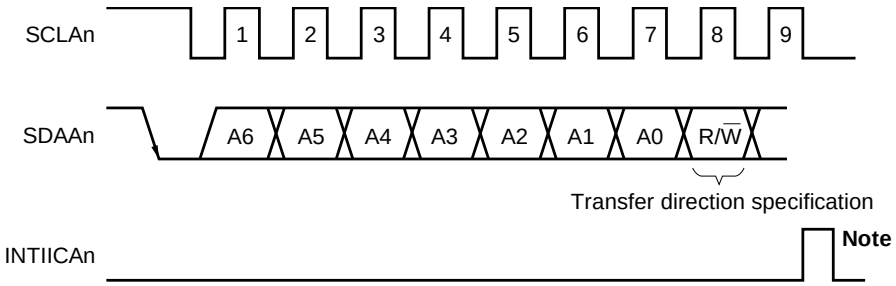

Note INTIICAn is not issued if data other than a local address or extension code is received during slave device operation.

Remark n = 0

15.5.4 Acknowledge (ACK)

ACK is used to check the status of serial data at the transmission and reception sides.

The reception side returns ACK each time it has received 8-bit data.

The transmission side usually receives ACK after transmitting 8-bit data. When ACK is returned from the reception side, it is assumed that reception has been correctly performed and processing is continued. Whether ACK has been detected can be checked by using bit 2 (ACKDn) of the IICA status register n (IICSn).

When the master receives the last data item, it does not return ACK and instead generates a stop condition. If a slave does not return ACK after receiving data, the master outputs a stop condition or restart condition and stops transmission. If ACK is not returned, the possible causes are as follows.

<1> Reception was not performed normally.
<2> The final data item was received.
<3> The reception side specified by the address does not exist.

To generate ACK, the reception side makes the SDAAn line low at the ninth clock (indicating normal reception).

Automatic generation of ACK is enabled by setting bit 2 (ACKEn) of IICA control register n0 (IICCTLn0) to 1. Bit 3 (TRCn) of the IICSn register is set by the data of the eighth bit that follows 7-bit address information. Usually, set the ACKEn bit to 1 for reception (TRCn = 0).

If a slave can receive no more data during reception (TRCn = 0) or does not require the next data item, then the slave must inform the master, by clearing the ACKEn bit to 0, that it will not receive any more data.

When the master does not require the next data item during reception (TRCn = 0), it must clear the ACKEn bit to 0 so that ACK is not generated. In this way, the master informs a slave at the transmission side that it does not require any more data (transmission will be stopped).

Figure 15-18. ACK

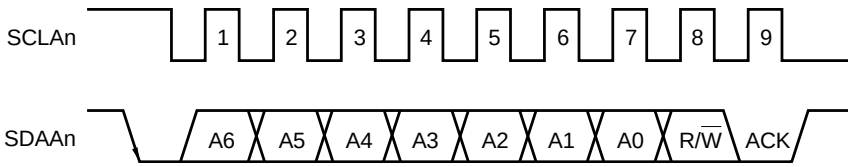

When the local address is received, ACK is automatically generated, regardless of the value of the ACKEn bit. When an address other than that of the local address is received, ACK is not generated (NACK).

When an extension code is received, ACK is generated if the ACKEn bit is set to 1 in advance.

How ACK is generated when data is received differs as follows depending on the setting of the clock stretching timing.

- When 8th cycle clock stretching is selected (bit 3 (WTIMn) of IICCTLn0 register = 0):
  By setting the ACKEn bit to 1 before releasing the clock stretch state, ACK is generated at the falling edge of the eighth clock of the SCLAn pin.
- When 9th cycle clock stretching is selected (bit 3 (WTIMn) of IICCTLn0 register = 1):
  ACK is generated by setting the ACKEn bit to 1 in advance.

Remark n = 0

15.5.5 Stop condition

When the SCLAn pin is at high level, changing the SDAAn pin from low level to high level generates a stop condition.

A stop condition is a signal that the master device generates to the slave device when serial transfer has been completed. When the device is used as a slave, stop conditions can be detected.

Figure 15-19. Stop Condition

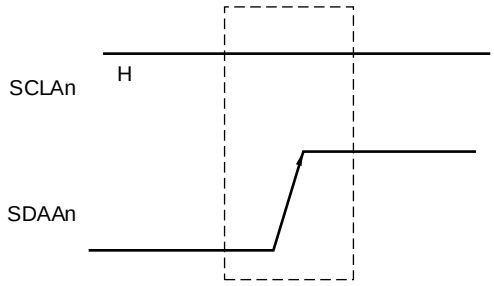

A stop condition is generated when bit 0 (SPTn) of IICA control register n0 (IICCTLn0) is set to 1. When the stop condition is detected, bit 0 (SPDn) of the IICA status register n (IICSn) is set to 1 and INTIICAn is generated when bit 4 (SPIEn) of the IICCTLn0 register is set to 1.

Remark n = 0

15.5.6 Clock stretching

The clock stretching is used to notify the communication partner that a device (master or slave) is preparing to transmit or receive data (i.e., is in a clock stretch state).

Setting the SCLAn pin to low level notifies the communication partner of the clock stretch state. When clock stretch state has been canceled for both the master and slave devices, the next data transfer can begin.

Figure 15-20. Clock stretching (1/2)

(1) When clock stretching is set for the ninth and eighth clock cycles for the master and slave devices, respectively (master transmits, slave receives, and ACKEn = 1)

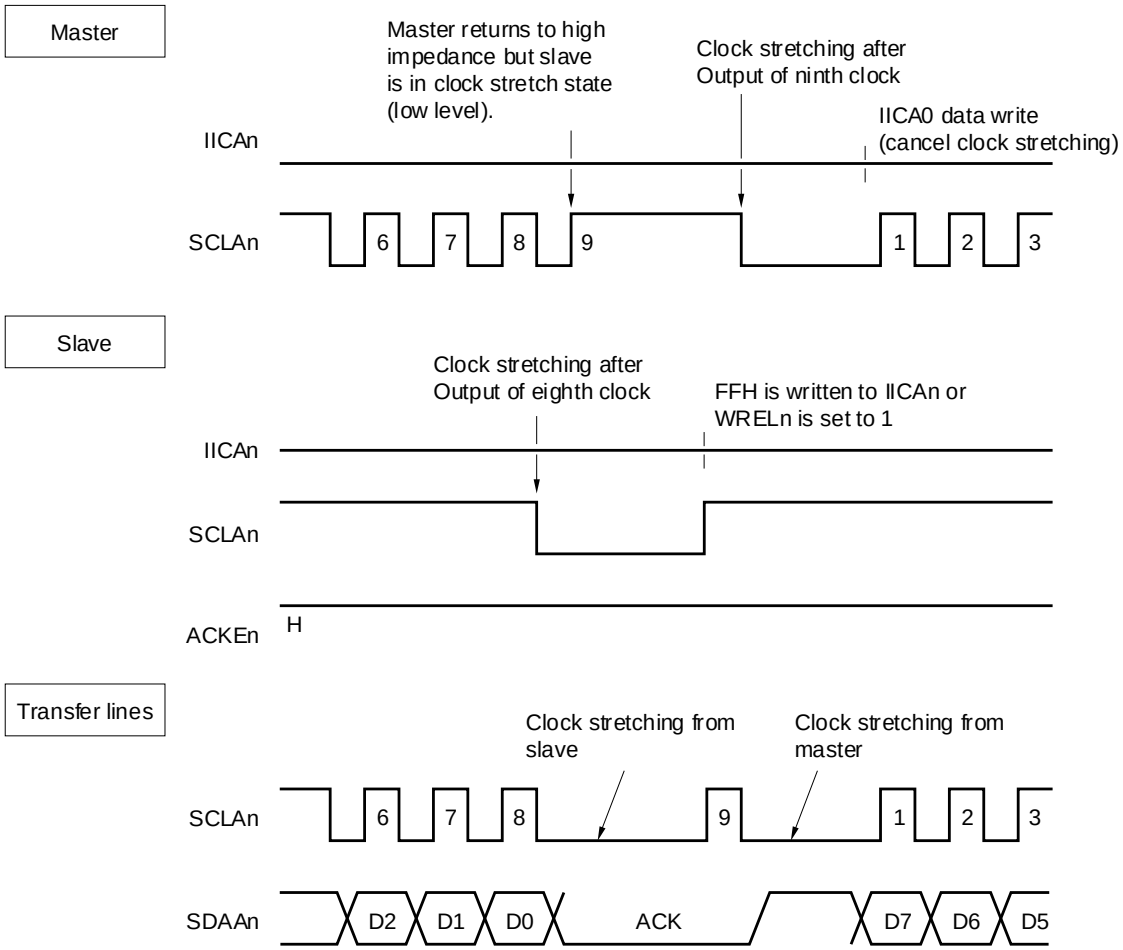

Remark n = 0

Figure 15-20. Clock stretching (2/2)

(2) When clock stretching is set for the ninth clock cycle for both the master and slave devices (master transmits, slave receives, and ACKEn = 1)

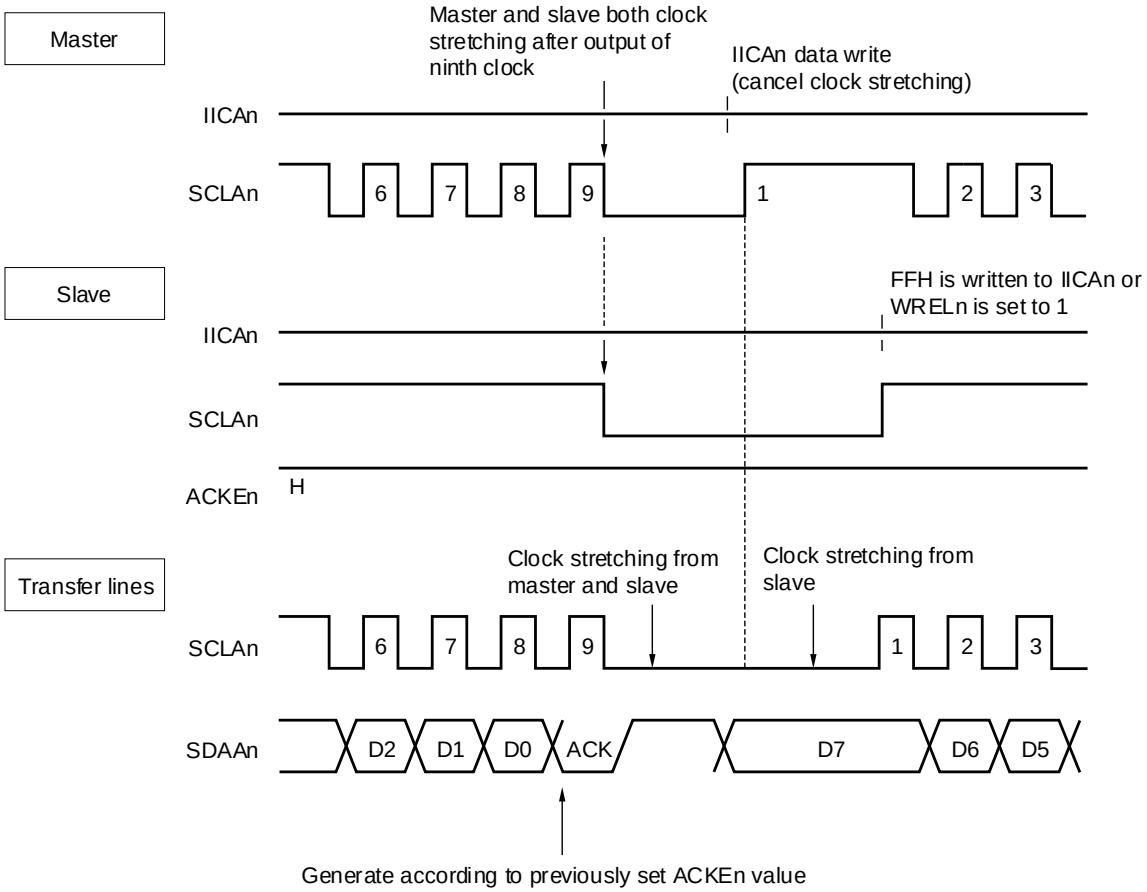

Remark ACKEn: Bit 2 of IICA control register n0 (IICCTLn0)
WRELn: Bit 5 of IICA control register n0 (IICCTLn0)

A clock stretching may be automatically generated depending on the setting of bit 3 (WTIMn) of IICA control register n0 (IICCTLn0).

Normally, the receiving side cancels the clock stretch state when bit 5 (WRELn) of the IICCTLn0 register is set to 1 or when FFH is written to the IICA shift register n (IICAn), and the transmitting side cancels the clock stretch state when data is written to the IICAn register.

The master device can also cancel the clock stretch state via either of the following methods.

- By setting bit 1 (STTn) of the IICCTLn0 register to 1
- By setting bit 0 (SPTn) of the IICCTLn0 register to 1

Remark n = 0

15.5.7 Canceling clock stretching

The I²C usually cancels a clock stretch state by the following processing.

- Writing data to the IICA shift register n (IICAn)
- Setting bit 5 (WRELn) of IICA control register n0 (IICCTLn0) (canceling clock stretching)
- Setting bit 1 (STTn) of the IICCTLn0 register (generating start condition)[Note]
- Setting bit 0 (SPTn) of the IICCTLn0 register (generating stop condition)[Note]

Note Master only

When the above clock stretching canceling processing is executed, the I²C cancels the clock stretch state and communication is resumed.

To cancel a clock stretch state and transmit data (including addresses), write the data to the IICAn register.

To receive data after canceling a clock stretch state, or to complete data transmission, set bit 5 (WRELn) of the IICCTLn0 register to 1.

To generate a restart condition after canceling a clock stretch state, set bit 1 (STTn) of the IICCTLn0 register to 1.

To generate a stop condition after canceling a clock stretch state, set bit n (SPTn) of the IICCTLn0 register to 1.

Execute the canceling processing only once for one clock stretch state.

If, for example, data is written to the IICAn register after canceling a clock stretch state by setting the WRELn bit to 1, an incorrect value may be output to SDAAn line because the timing for changing the SDAAn line conflicts with the timing for writing the IICAn register.

In addition to the above, communication is stopped if the IICEn bit is cleared to 0 when communication has been aborted, so that the clock stretch state can be canceled.

If the I²C bus has deadlocked due to noise, processing is saved from communication by setting bit 6 (LRELn) of the IICCTLn0 register, so that the clock stretch state can be canceled.

Caution **If a processing to cancel a clock stretch state is executed when WUPn = 1, the clock stretch state will not be canceled.**

Remark n = 0

15.5.8 Interrupt request (INTIICAn) generation timing and clock stretching control

The setting of bit 3 (WTIMn) of IICA control register n0 (IICCTLn0) determines the timing by which INTIICAn is generated and the corresponding clock stretching control, as shown in Table 15-2.

Table 15-2. INTIICAn Generation Timing and Clock Stretching Control

WTIMn	During Slave Device Operation			During Master Device Operation		
	Address	Data Reception	Data Transmission	Address	Data Reception	Data Transmission
0	9 Notes 1, 2	8 Note 2	8 Note 2	9	8	8
1	9 Notes 1, 2	9 Note 2	9 Note 2	9	9	9

Notes 1. The slave device's INTIICAn signal and clock stretch period occurs at the falling edge of the ninth clock only when there is a match with the address set to the slave address register n (SVAn).
At this point, ACK is generated regardless of the value set to the IICCTLn0 register's bit 2 (ACKEn). For a slave device that has received an extension code, INTIICAn occurs at the falling edge of the eighth clock.
However, if the address does not match after restart, INTIICAn is generated at the falling edge of the 9th clock, but clock stretching does not occur.

2. If the received address does not match the contents of the slave address register n (SVAn) and extension code is not received, neither INTIICAn nor a clock stretching occurs.

Remark The numbers in the table indicate the number of the serial clock's clock signals. Interrupt requests and clock stretching control are both synchronized with the falling edge of these clock signals.

(1) During address transmission/reception

- Slave device operation: Interrupt and clock stretching timing are determined depending on the conditions described in Notes 1 and 2 above, regardless of the WTIMn bit.
- Master device operation: Interrupt and clock stretching timing occur at the falling edge of the ninth clock regardless of the WTIMn bit.

(2) During data reception

- Master/slave device operation: Interrupt and clock stretching timing are determined according to the WTIMn bit.

(3) During data transmission

- Master/slave device operation: Interrupt and clock stretching timing are determined according to the WTIMn bit.

(4) Clock stretching cancellation method

The four clock stretching cancellation methods are as follows.

- Writing data to the IICA shift register n (IICAn)
- Setting bit 5 (WRELn) of IICA control register n0 (IICCTLn0) (canceling clock stretching)
- Setting bit 1 (STTn) of IICCTLn0 register (generating start condition)Note
- Setting bit 0 (SPTn) of IICCTLn0 register (generating stop condition)Note

Note Master only.

When 8th cycle clock stretching has been selected (WTIMn = 0), the presence/absence of ACK generation must be determined prior to clock stretching cancellation.

(5) Stop condition detection

INTIICAn is generated when a stop condition is detected (only when SPIEn = 1).

Remark n = 0

15.5.9 Address match detection method

In I²C bus mode, the master device can select a particular slave device by transmitting the corresponding slave address.

Address match can be detected automatically by hardware. An interrupt request (INTIICAn) occurs when the address set to the slave address register n (SVAn) matches the slave address sent by the master device, or when an extension code has been received.

15.5.10 Error detection

In I²C bus mode, the status of the serial data bus (SDAAn) during data transmission is captured by the IICA shift register n (IICAn) of the transmitting device, so the IICA data prior to transmission can be compared with the transmitted IICA data to enable detection of transmission errors. A transmission error is judged as having occurred when the compared data values do not match.

Remark n = 0

15.5.11 Extension code

(1) When the higher 4 bits of the receive address are either “0000” or “1111”, the extension code reception flag (EXCn) is set to 1 for extension code reception and an interrupt request (INTIICAn) is issued at the falling edge of the eighth clock. The local address stored in the slave address register n (SVAn) is not affected.

(2) The settings below are specified if 11110xx0 is transferred from the master by using a 10-bit address transfer when the SVAn register is set to 11110xx0. Note that INTIICAn occurs at the falling edge of the eighth clock.

- Higher four bits of data match: EXCn = 1
- Seven bits of data match: COIn = 1

Remark EXCn: Bit 5 of IICA status register n (IICSn)
COIn: Bit 4 of IICA status register n (IICSn)

(3) Since the processing after the interrupt request occurs differs according to the data that follows the extension code, such processing is performed by software.
If the extension code is received while a slave device is operating, then the slave device is participating in communication even if its address does not match.
For example, after the extension code is received, if you do not wish to operate the target device as a slave device, set bit 6 (LRELn) of IICA control register n0 (IICCTLn0) to 1 to set the standby mode for the next communication operation.

Table 15-3. Bit Definitions of Major Extension Codes

Slave Address	R/W Bit	Description
0 0 0 0 0 0 0	0	General call address
1 1 1 1 0 x x	0	10-bit slave address specification (during address authentication)
1 1 1 1 0 x x	1	10-bit slave address specification (after address match, when read command is issued)

Remarks 1. See the I²C bus specifications issued by NXP Semiconductors for details of extension codes other than those described above.
2. n = 0

15.5.12 Arbitration

When several master devices simultaneously generate a start condition (when the STTn bit is set to 1 before the STDn bit is set to 1), communication among the master devices is performed as the number of clocks are adjusted until the data differs. This kind of operation is called arbitration.

When one of the master devices loses in arbitration, an arbitration loss flag (ALDn) in the IICA status register n (IICSn) is set (1) via the timing by which the arbitration loss occurred, and the SCLAn and SDAAn lines are both set to high impedance, which releases the bus.

The arbitration loss is detected based on the timing of the next interrupt request (the eighth or ninth clock, when a stop condition is detected, etc.) and the ALDn = 1 setting that has been made by software.

For details of interrupt request timing, see **15.5.8 Interrupt request (INTIICAn) generation timing and clock stretching control**.

Remark STDn: Bit 1 of IICA status register n (IICSn)
STTn: Bit 1 of IICA control register n0 (IICCTLn0)

Figure 15-21. Arbitration Timing Example

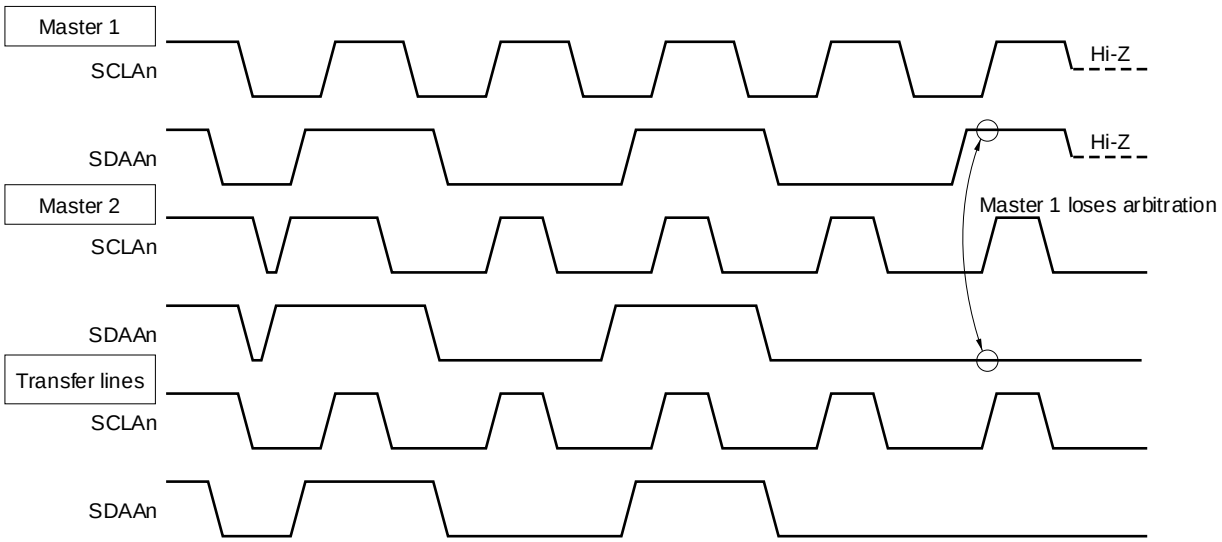

Remark n = 0

Table 15-4. Status During Arbitration and Interrupt Request Generation Timing

Status During Arbitration	Interrupt Request Generation Timing
During address transmission	At falling edge of eighth or ninth clock following byte transfer[Note 1]
Read/write data after address transmission	
During extension code transmission	
Read/write data after extension code transmission	
During data transmission	
During ACK transfer period after data transmission	
When restart condition is detected during data transfer	
When stop condition is detected during data transfer	When stop condition is generated (when SPIEn = 1)[Note 2]
When data is at low level while attempting to generate a restart condition	At falling edge of eighth or ninth clock following byte transfer[Note 1]
When stop condition is detected while attempting to generate a restart condition	When stop condition is generated (when SPIEn = 1)[Note 2]
When data is at low level while attempting to generate a stop condition	At falling edge of eighth or ninth clock following byte transfer[Note 1]
When SCLAn is at low level while attempting to generate a restart condition	

Notes 1. When the WTIMn bit (bit 3 of IICA control register n0 (IICCTLn0)) = 1, an interrupt request occurs at the falling edge of the ninth clock. When WTIMn = 0 and the extension code's slave address is received, an interrupt request occurs at the falling edge of the eighth clock.

2. When there is a chance that arbitration will occur, set SPIEn = 1 for master device operation.

Remarks 1. SPIEn: Bit 4 of IICA control register n0 (IICCTLn0)

2. n = 0

15.5.13 Wakeup function

The I²C bus slave function is a function that generates an interrupt request signal (INTIICAn) when a local address and extension code have been received.

This function makes processing more efficient by preventing unnecessary INTIICAn signal from occurring when addresses do not match.

When a start condition is detected, wakeup standby mode is set. This wakeup standby mode is in effect while addresses are transmitted due to the possibility that an arbitration loss may change the master device (which has generated a start condition) to a slave device.

To use the wakeup function in the STOP mode, set the WUPn bit to 1. Addresses can be received regardless of the operation clock. An interrupt request signal (INTIICAn) is also generated when a local address and extension code have been received. Operation returns to normal operation by using an instruction to clear (0) the WUPn bit after this interrupt has been generated.

Figure 15-22 shows the flow for setting WUPn = 1 and Figure 15-23 shows the flow for setting WUPn = 0 upon an address match.

Figure 15-22. Flow When Setting WUPn = 1

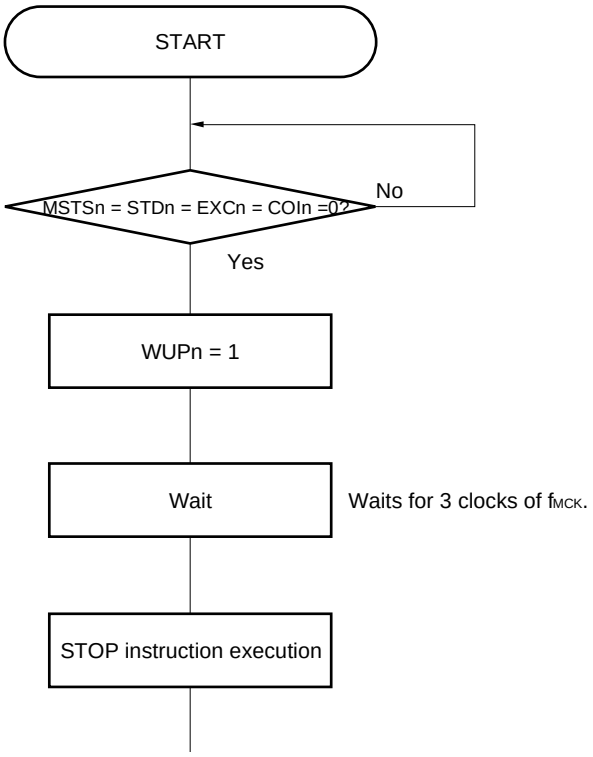

Remark n = 0

Figure 15-23. Flow When Setting WUPn = 0 upon Address Match (Including Extension Code Reception)

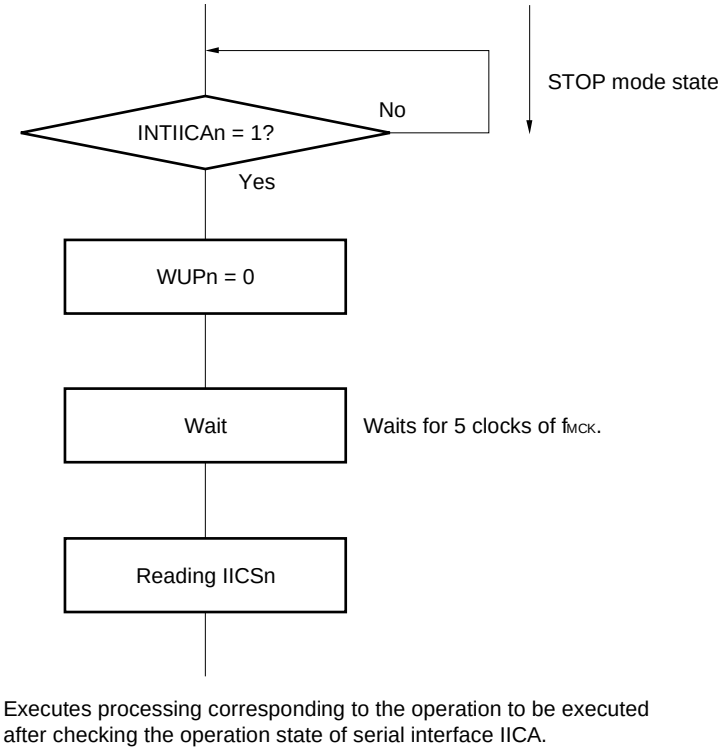

Use the following flows to perform the processing to release the STOP mode other than by an interrupt request (INTIICAn) generated from serial interface IICA.

- When operating next IIC communication as master: Flow shown in Figure 15-24
- When operating next IIC communication as slave:
  When restored by INTIICAn interrupt: Same as the flow in Figure 15-23
  When restored by other than INTIICAn interrupt: Until the INTIICAn interrupt occurs, continue operating with WUPn left set to 1

Remark n = 0

Figure 15-24. When Operating as Master Device after Releasing STOP Mode Other than by INTIICAn

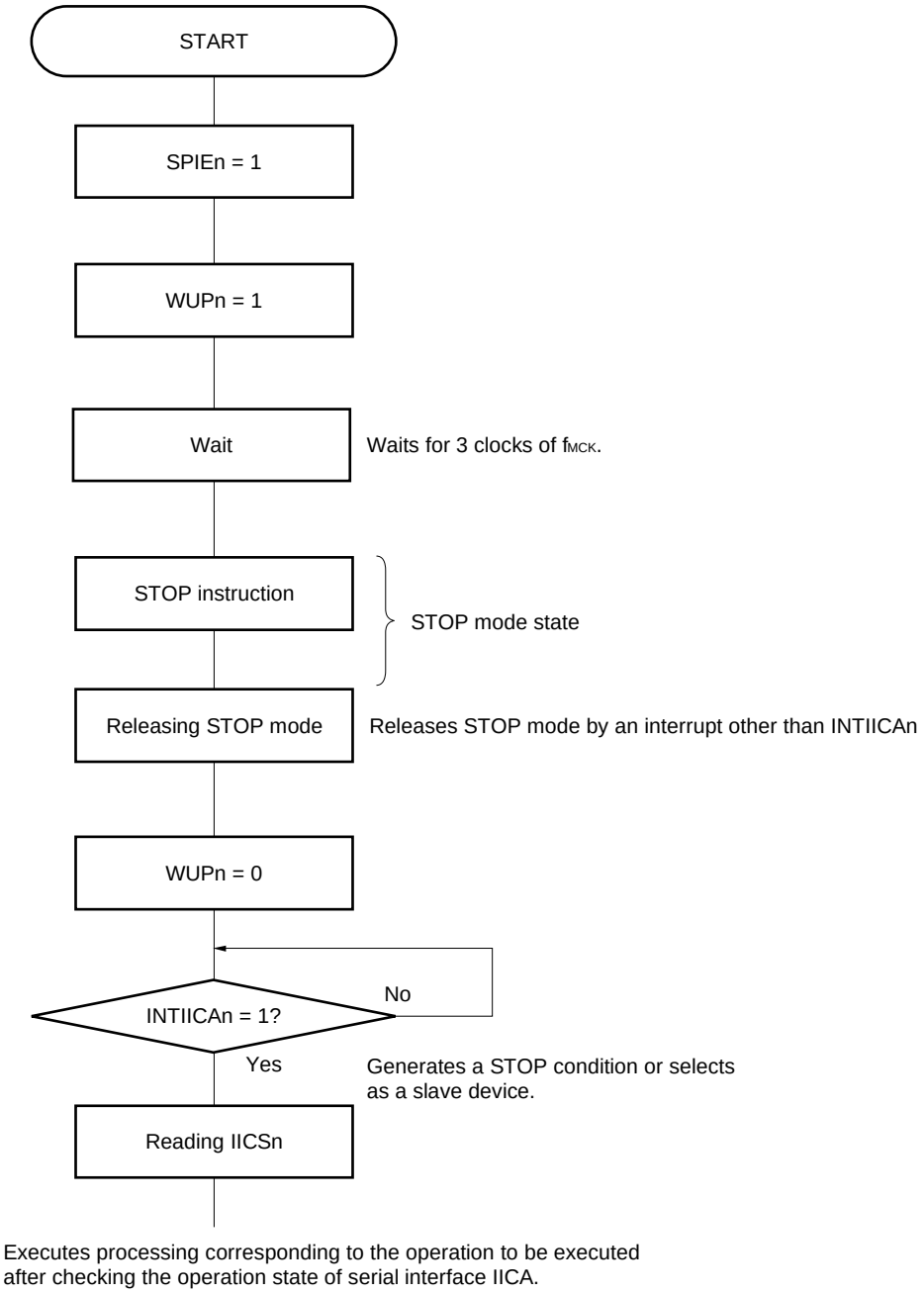

Remark n = 0

15.5.14 Communication reservation

(1) When communication reservation function is enabled (bit n (IICRSVn) of IICA flag register n (IICFn) = 0)

To start master device communications when not currently using a bus, a communication reservation can be made to enable transmission of a start condition when the bus is released. There are two modes under which the bus is not used.

- When arbitration results in neither master nor slave operation
- When an extension code is received and slave operation is disabled (ACK is not returned and the bus was released by setting bit 6 (LRELn) of IICA control register n0 (IICCTLn0) to 1 and saving communication).

If bit 1 (STTn) of the IICCTLn0 register is set to 1 while the bus is not used (after a stop condition is detected), a start condition is automatically generated and wait state is set.
If an address is written to the IICA shift register n (IICAn) after bit 4 (SPIEn) of the IICCTLn0 register was set to 1, and it was detected by generation of an interrupt request signal (INTIICAn) that the bus was released (detection of the stop condition), then the device automatically starts communication as the master. Data written to the IICAn register before the stop condition is detected is invalid.
When the STTn bit has been set to 1, the operation mode (as start condition or as communication reservation) is determined according to the bus status.

- If the bus has been released ..... a start condition is generated
- If the bus has not been released (standby mode)..... communication reservation

Check whether the communication reservation operates or not by using the MSTSn bit (bit 7 of the IICA status register n (IICSn)) after the STTn bit is set to 1 and the wait time elapses.
Use software to secure the wait time calculated by the following expression.

Wait time from setting STTn = 1 to checking the MSTSn flag: (IICWLn setting value + IICWHn setting value + 4) / f_{MCK} + t_F × 2

Remarks 1. IICWLn: IICA low-level width setting register n
IICWHn: IICA high-level width setting register n
t_F: SDAAn and SCLAn signal falling times
f_{MCK}: IICA operation clock frequency
2. n = 0

Figure 15-25 shows the communication reservation timing.

Figure 15-25. Communication Reservation Timing

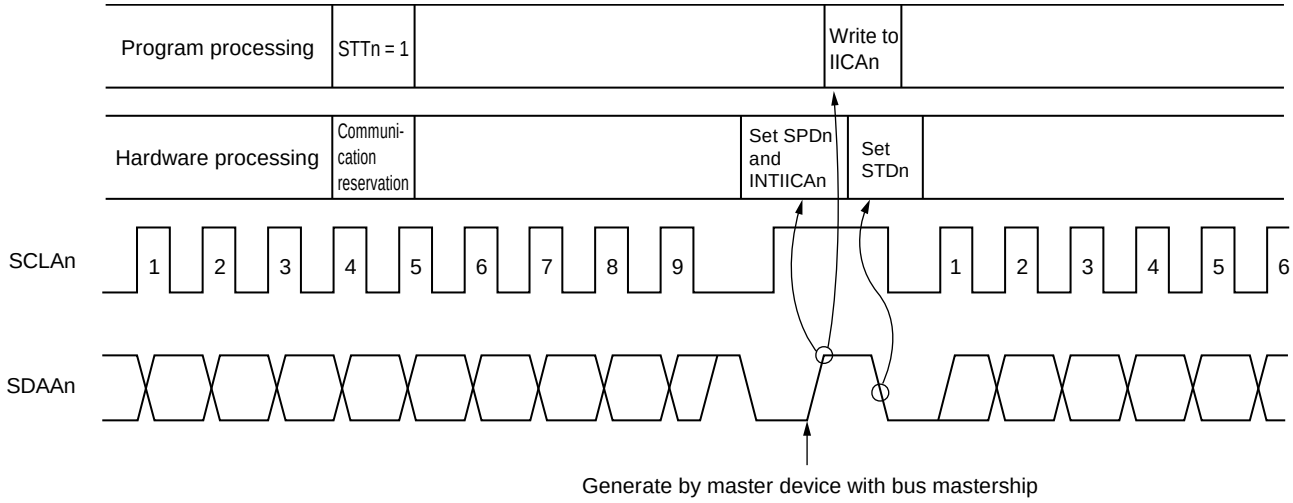

Remark IICAn: IICA shift register n
STTn: Bit 1 of IICA control register n0 (IICCTLn0)
STDn: Bit 1 of IICA status register n (IICSn)
SPDn: Bit 0 of IICA status register n (IICSn)

Communication reservations are accepted via the timing shown in Figure 15-26. After bit 1 (STDn) of the IICA status register n (IICSn) is set to 1, a communication reservation can be made by setting bit 1 (STTn) of IICA control register n0 (IICCTLn0) to 1 before a stop condition is detected.

Figure 15-26. Timing for Accepting Communication Reservations

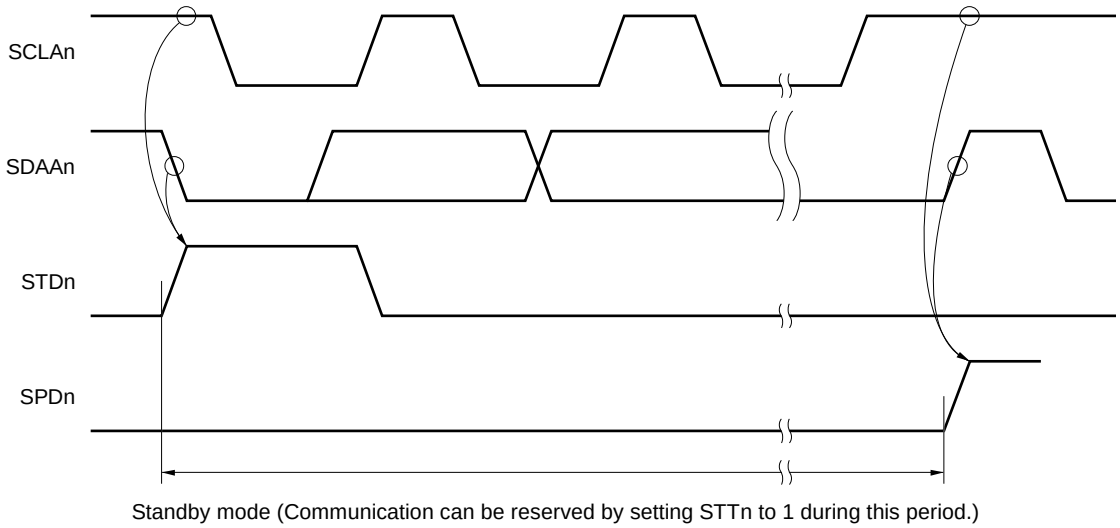

Figure 15-27 shows the communication reservation protocol.

Remark n = 0

Figure 15-27. Communication Reservation Protocol

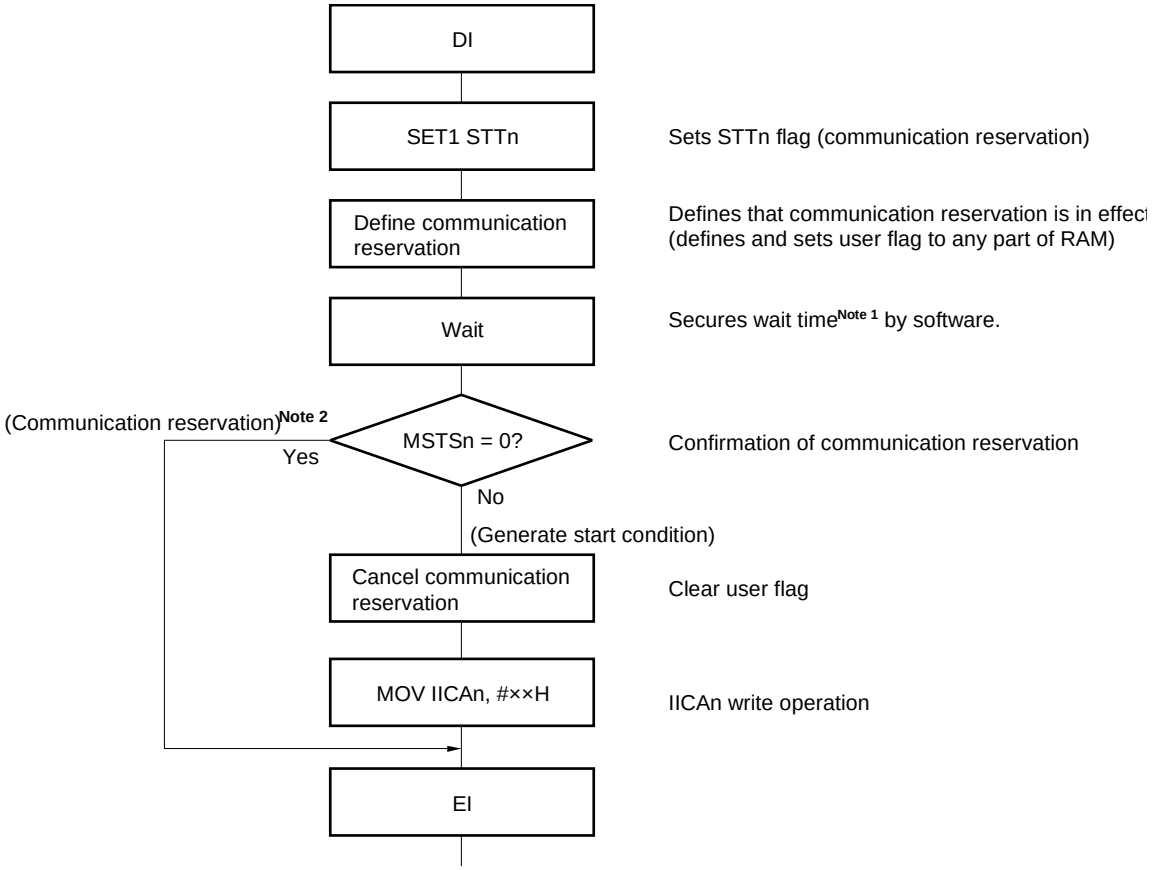

Notes 1. The wait time is calculated as follows.
(IICWLn setting value + IICWHn setting value + 4) / f_{MCK} + t_F × 2

2. The communication reservation operation executes a write to the IICA shift register n (IICAn) when a stop condition interrupt request occurs.

Remarks 1. STTn: Bit 1 of IICA control register n0 (IICCTLn0)
MSTSn: Bit 7 of IICA status register n (IICSn)
IICAn: IICA shift register n
IICWLn: IICA low-level width setting register n
IICWHn: IICA high-level width setting register n
t_F: SDAAn and SCLAn signal falling times
f_{MCK}: IICA operation clock frequency

2. n = 0

(2) When communication reservation function is disabled (bit 0 (IICRSVn) of IICA flag register n (IICFn) = 1)

When bit 1 (STTn) of IICA control register n0 (IICCTLn0) is set to 1 when the bus is not used in a communication during bus communication, this request is rejected and a start condition is not generated. The following two statuses are included in the status where bus is not used.

- When arbitration results in neither master nor slave operation
- When an extension code is received and slave operation is disabled (ACK is not returned and the bus was released by setting bit 6 (LRELn) of the IICCTLn0 register to 1 and saving communication)

To confirm whether the start condition was generated or request was rejected, check STCFn (bit 7 of the IICFn register). It takes up to 5 clocks of f_{MCK} until the STCFn bit is set to 1 after setting STTn = 1. Therefore, secure the time by software.

Remark n = 0

15.5.15 Cautions

(1) When STCENn = 0

Immediately after I²C operation is enabled (IICEn = 1), the bus communication status (IICBSYn = 1) is recognized regardless of the actual bus status. When changing from a mode in which no stop condition has been detected to a master device communication mode, first generate a stop condition to release the bus, then perform master device communication.

When using multiple masters, it is not possible to perform master device communication when the bus has not been released (when a stop condition has not been detected).

Use the following sequence for generating a stop condition.

<1> Set IICA control register n1 (IICCTLn1).
<2> Set bit 7 (IICEn) of IICA control register n0 (IICCTLn0) to 1.
<3> Set bit 0 (SPTn) of the IICCTLn0 register to 1.

(2) When STCENn = 1

Immediately after I²C operation is enabled (IICEn = 1), the bus released status (IICBSYn = 0) is recognized regardless of the actual bus status. To generate the first start condition (STTn = 1), it is necessary to confirm that the bus has been released, so as to not disturb other communications.

(3) If other I²C communications are already in progress

If I²C operation is enabled and the device participates in communication already in progress when the SDAAn pin is low and the SCLAn pin is high, the macro of I²C recognizes that the SDAAn pin has gone low (detects a start condition). If the value on the bus at this time can be recognized as an extension code, ACK is returned, but this interferes with other I²C communications. To avoid this, start I²C in the following sequence.

<1> Clear bit 4 (SPIEn) of the IICCTLn0 register to 0 to disable generation of an interrupt request signal (INTIICAn) when the stop condition is detected.
<2> Set bit 7 (IICEn) of the IICCTLn0 register to 1 to enable the operation of I²C.
<3> Wait for detection of the start condition.
<4> Set bit 6 (LRELn) of the IICCTLn0 register to 1 before ACK is returned (4 to 72 clocks of f_{MCK} after setting the IICEn bit to 1), to forcibly disable detection.

(4) Setting the STTn and SPTn bits (bits 1 and 0 of the IICCTLn0 register) again after they are set and before they are cleared to 0 is prohibited.

(5) When transmission is reserved, set the SPIEn bit (bit 4 of the IICCTLn0 register) to 1 so that an interrupt request is generated when the stop condition is detected. Transfer is started when communication data is written to the IICA shift register n (IICAn) after the interrupt request is generated. Unless the interrupt is generated when the stop condition is detected, the device stops in the wait state because the interrupt request is not generated when communication is started. However, it is not necessary to set the SPIEn bit to 1 when the MSTSn bit (bit 7 of the IICA status register n (IICSn)) is detected by software.

Remark n = 0

15.5.16 Communication operations

The following shows three operation procedures with the flowchart.

(1) Master operation in single master system

The flowchart when using the RL78/L13 as the master in a single master system is shown below.

This flowchart is broadly divided into the initial settings and communication processing. Execute the initial settings at startup. If communication with the slave is required, prepare the communication and then execute communication processing.

(2) Master operation in multimaster system

In the I^2C bus multimaster system, whether the bus is released or used cannot be judged by the I^2C bus specifications when the bus takes part in a communication. Here, when data and clock are at a high level for a certain period (1 frame), the RL78/L13 takes part in a communication with bus released state.

This flowchart is broadly divided into the initial settings, communication waiting, and communication processing. The processing when the RL78/L13 looses in arbitration and is specified as the slave is omitted here, and only the processing as the master is shown. Execute the initial settings at startup to take part in a communication. Then, wait for the communication request as the master or wait for the specification as the slave. The actual communication is performed in the communication processing, and it supports the transmission/reception with the slave and the arbitration with other masters.

(3) Slave operation

An example of when the RL78/L13 is used as the I^2C bus slave is shown below.

When used as the slave, operation is started by an interrupt. Execute the initial settings at startup, then wait for the INTIICAn interrupt occurrence (communication waiting). When an INTIICAn interrupt occurs, the communication status is judged and its result is passed as a flag over to the main processing.

By checking the flags, necessary communication processing is performed.

Remark n = 0

(1) Master operation in single-master system

Figure 15-28. Master Operation in Single-Master System

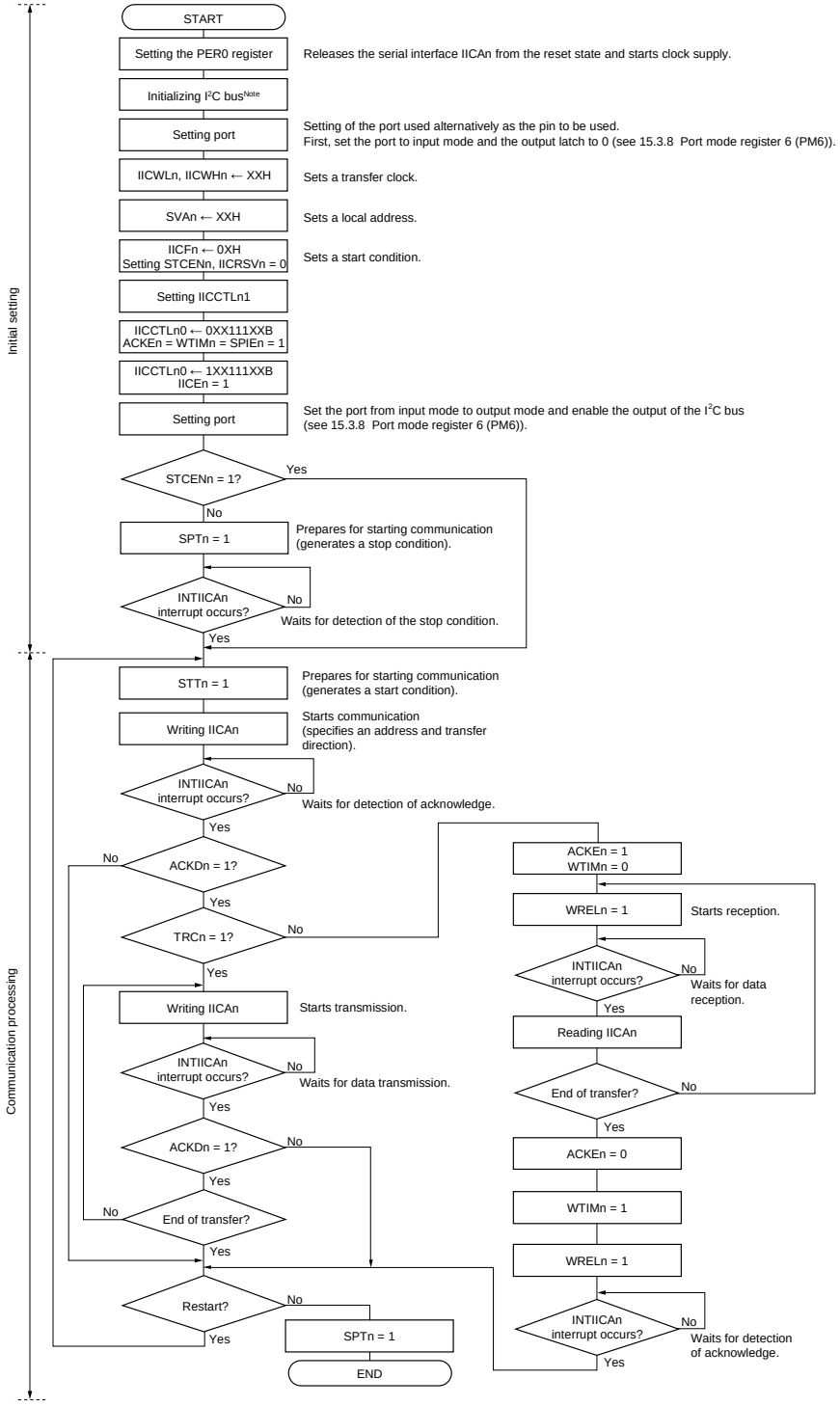

Note Release (SCLAn and SDAAn pins = high level) the I²C bus in conformance with the specifications of the product that is communicating. If EEPROM is outputting a low level to the SDAAn pin, for example, set the SCLAn pin in the output port mode, and output a clock pulse from the output port until the SDAAn pin is constantly at high level.

Remarks 1. Conform to the specifications of the product that is communicating, with respect to the transmission and reception formats.

2. n = 0

(2) Master operation in multi-master system

Figure 15-29. Master Operation in Multi-Master System (1/3)

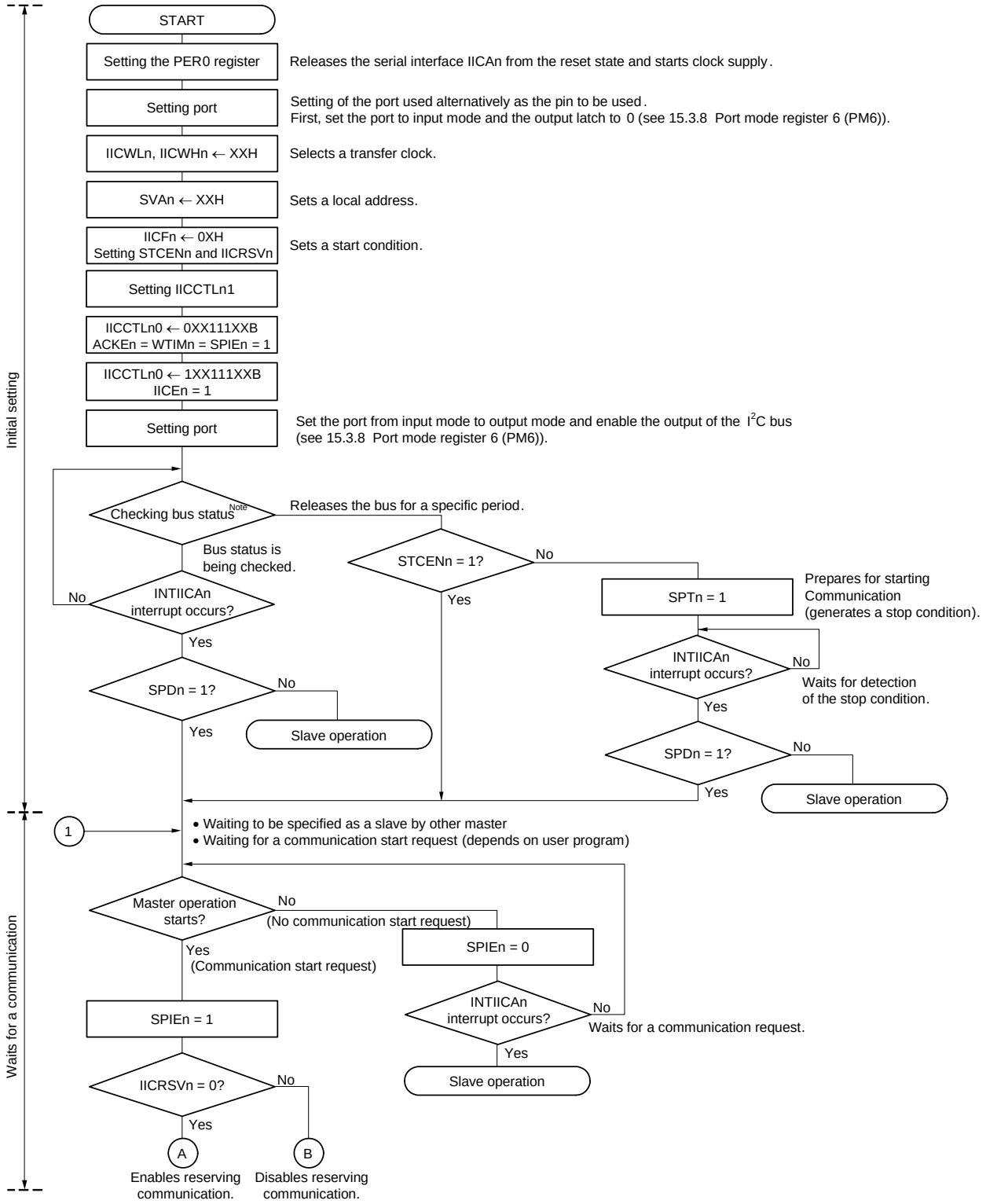

Note Confirm that the bus is released (CLDn bit = 1, DADn bit = 1) for a specific period (for example, for a period of one frame). If the SDAAn pin is constantly at low level, decide whether to release the I²C bus (SCLAn and SDAAn pins = high level) in conformance with the specifications of the product that is communicating.

Remark n = 0

Figure 15-29. Master Operation in Multi-Master System (2/3)

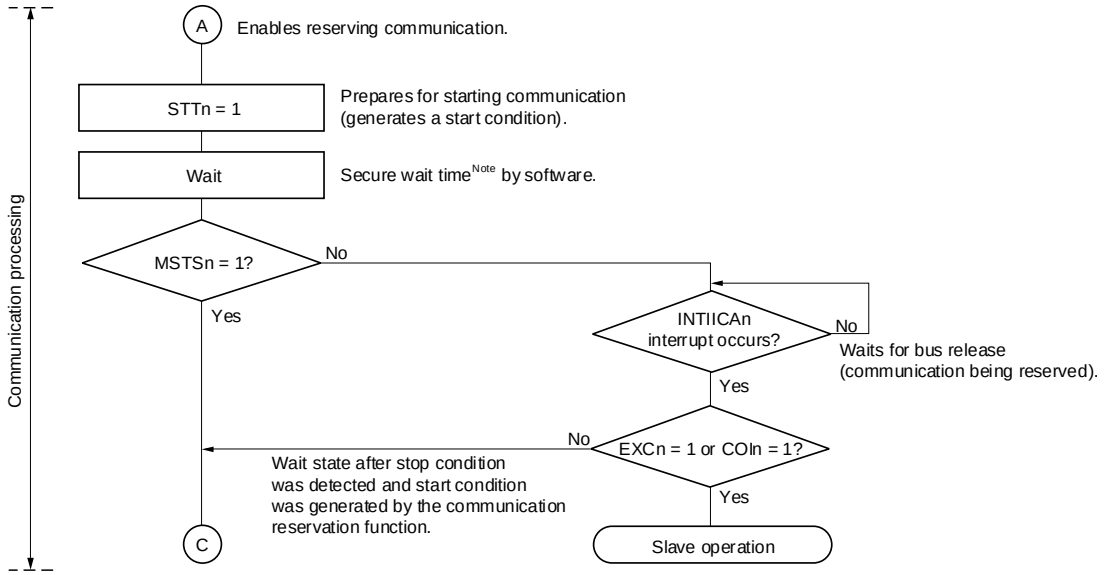

Note The wait time is calculated as follows.

(IICWLn setting value + IICWHn setting value + 4)/f_{MCK} + t_F × 2

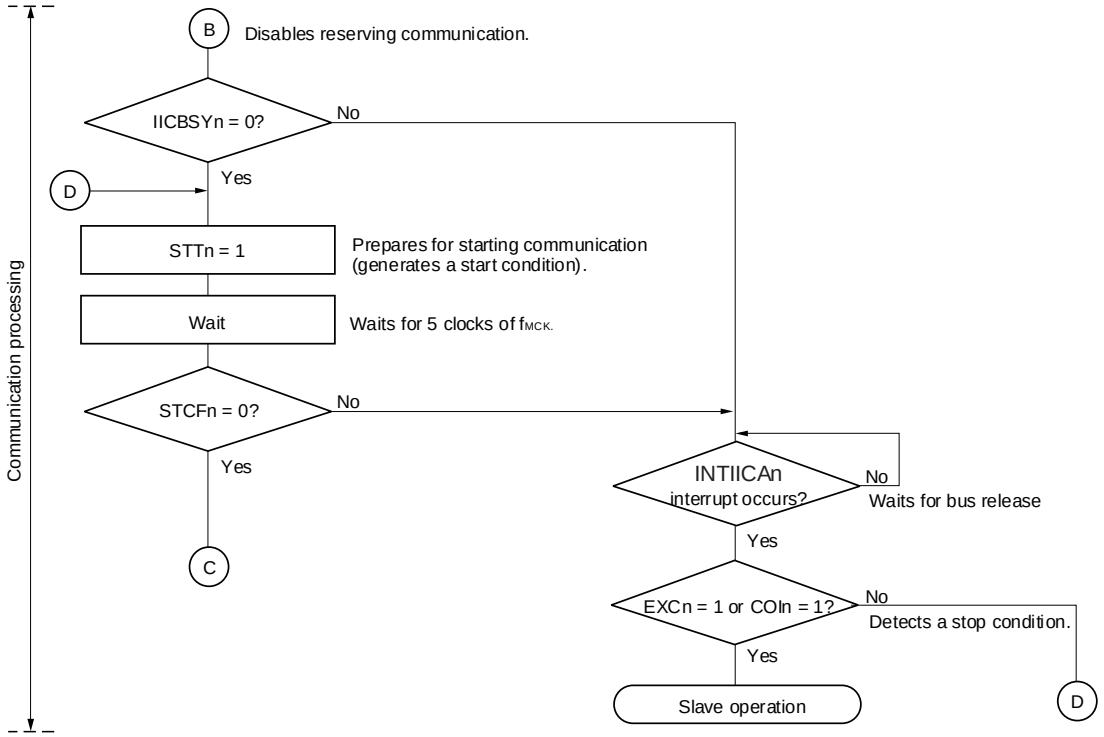

Remarks 1. IICWLn: IICA low-level width setting register n

IICWHn: IICA high-level width setting register n

t_F: SDAAn and SCLAn signal falling times

f_{MCK}: IICA operation clock frequency

2. n = 0

Figure 15-29. Master Operation in Multi-Master System (3/3)

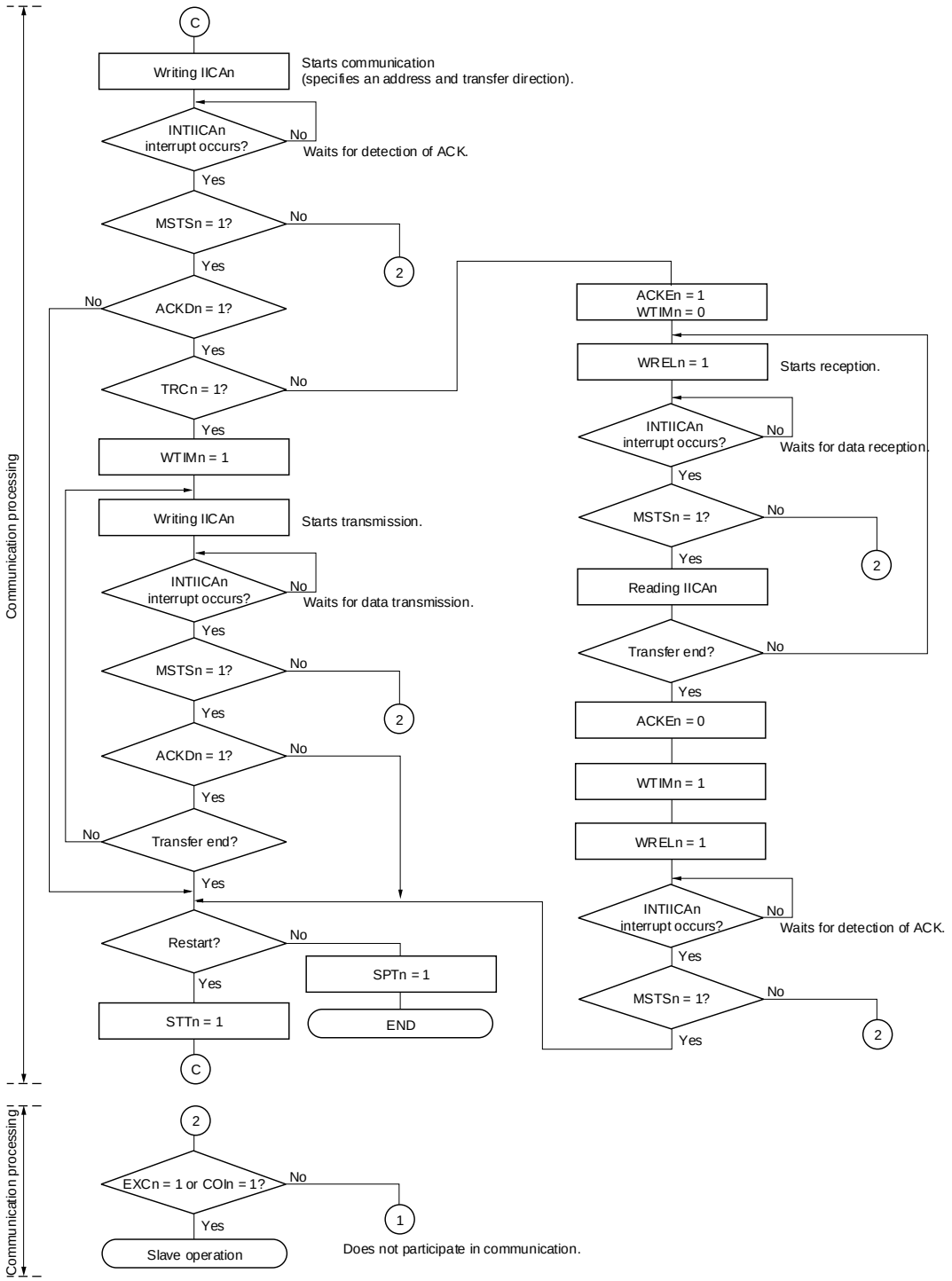

Remarks 1. Conform to the specifications of the product that is communicating, with respect to the transmission and reception formats.

2. To use the device as a master in a multi-master system, read the MSTSn bit each time interrupt INTIICAn has occurred to check the arbitration result.

3. To use the device as a slave in a multi-master system, check the status by using the IICA status register n (IICSn) and IICA flag register n (IICFn) each time interrupt INTIICAn has occurred, and determine the processing to be performed next.

4. n = 0

(3) Slave operation

The processing procedure of the slave operation is as follows.

Basically, the slave operation is event-driven. Therefore, processing by the INTIICAn interrupt (processing that must substantially change the operation status such as detection of a stop condition during communication) is necessary.

In the following explanation, it is assumed that the extension code is not supported for data communication. It is also assumed that the INTIICAn interrupt servicing only performs status transition processing, and that actual data communication is performed by the main processing.

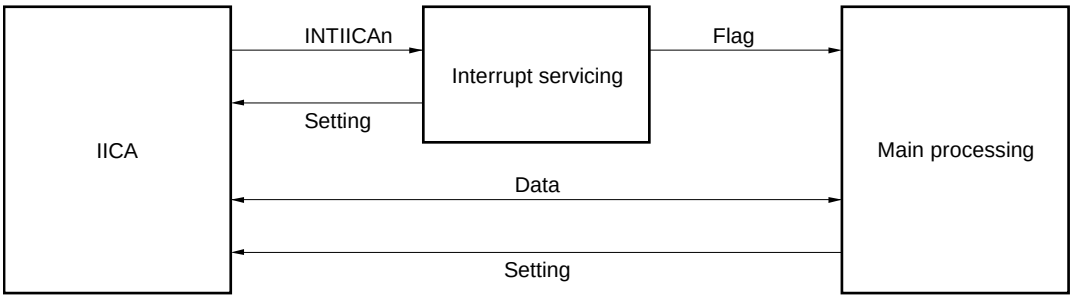

Therefore, data communication processing is performed by preparing the following three flags and passing them to the main processing instead of INTIICAn.

<1> Communication mode flag

This flag indicates the following two communication statuses.

- Clear mode: Status in which data communication is not performed
- Communication mode: Status in which data communication is performed (from valid address detection to stop condition detection, no detection of ACK from master, address mismatch)

<2> Ready flag

This flag indicates that data communication is enabled. Its function is the same as the INTIICAn interrupt for ordinary data communication. This flag is set by interrupt servicing and cleared by the main processing. Clear this flag by interrupt servicing when communication is started. However, the ready flag is not set by interrupt servicing when the first data is transmitted. Therefore, the first data is transmitted without the flag being cleared (an address match is interpreted as a request for the next data).

<3> Communication direction flag

This flag indicates the direction of communication. Its value is the same as the TRCn bit.

Remark n = 0

The main processing of the slave operation is explained next.

Start serial interface IICA and wait until communication is enabled. When communication is enabled, execute communication by using the communication mode flag and ready flag (processing of the stop condition and start condition is performed by an interrupt. Here, check the status by using the flags).

The transmission operation is repeated until the master no longer returns ACK. If ACK is not returned from the master, communication is completed.

For reception, the necessary amount of data is received. When communication is completed, ACK is not returned as the next data. After that, the master generates a stop condition or restart condition. Exit from the communication status occurs in this way.

Figure 15-30. Slave Operation Flowchart (1)

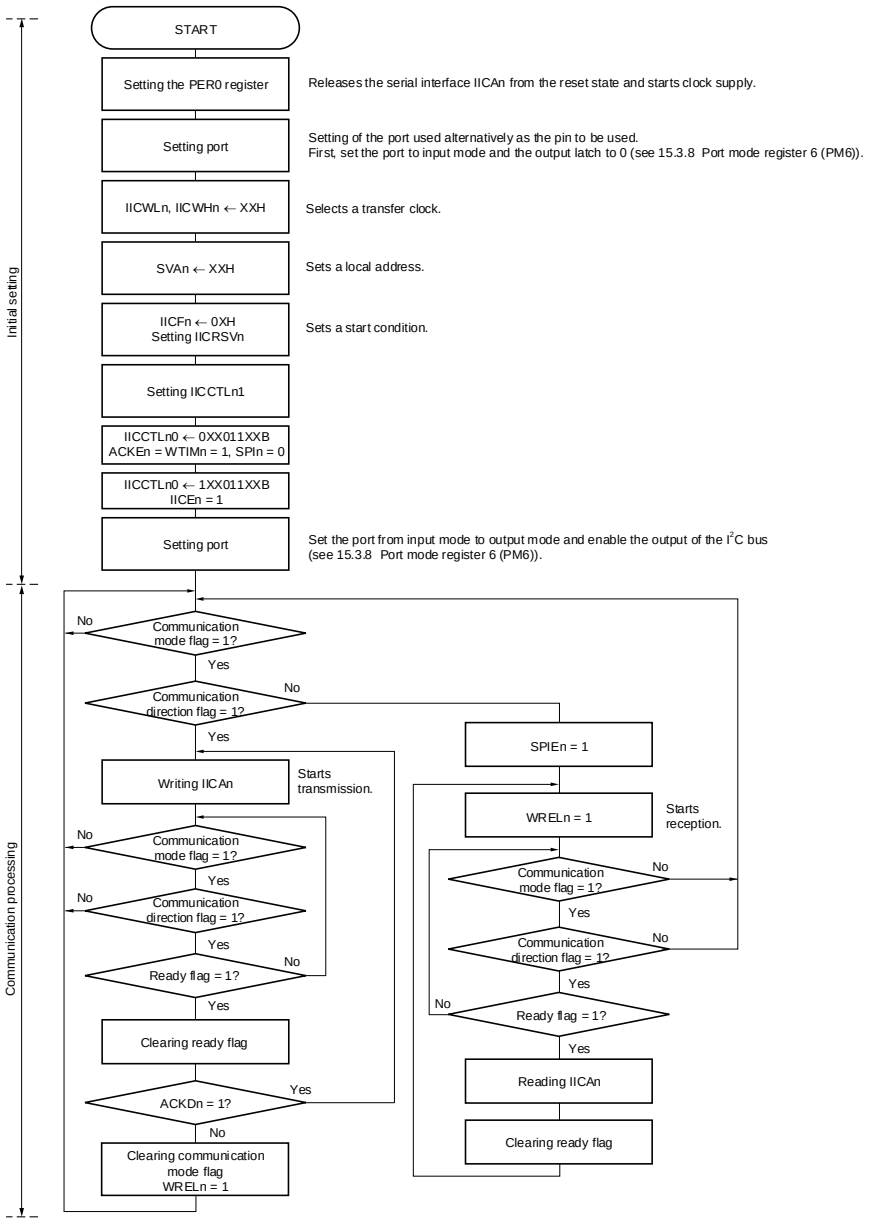

Remarks 1. Conform to the specifications of the product that is in communication, regarding the transmission and reception formats.

2. n = 0

An example of the processing procedure of the slave with the INTIICAn interrupt is explained below (processing is performed assuming that no extension code is used). The INTIICAn interrupt checks the status, and the following operations are performed.

<1> Communication is stopped if the stop condition is issued.
<2> If the start condition is issued, the address is checked and communication is completed if the address does not match. If the address matches, the communication mode is set, wait is cancelled, and processing returns from the interrupt (the ready flag is cleared).
<3> For data transmit/receive, only the ready flag is set. Processing returns from the interrupt with the I²C bus remaining in the wait state.

Remark <1> to <3> above correspond to <1> to <3> in Figure 15-31 Slave Operation Flowchart (2).

Figure 15-31. Slave Operation Flowchart (2)

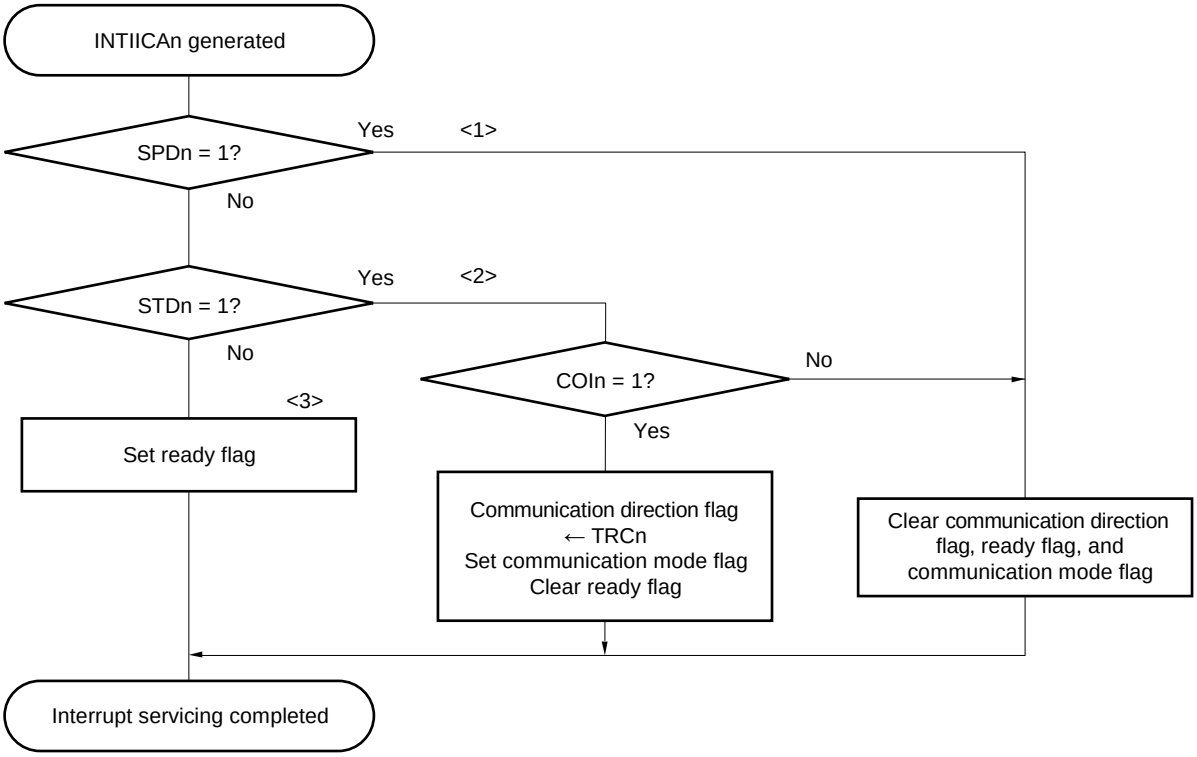

Remark n = 0

15.5.17 Timing of I²C interrupt request (INTIICAn) occurrence

The timing of transmitting or receiving data and generation of interrupt request signal INTIICAn, and the value of the IICA status register n (IICSn) when the INTIICAn signal is generated are shown below.

Remarks 1. ST: Start condition
AD6 to AD0: Address
R/$\overline{W}$: Transfer direction specification
ACK: Acknowledge
D7 to D0: Data
SP: Stop condition
2. n = 0

(1) Master device operation

(a) Start ~ Address ~ Data ~ Data ~ Stop (transmission/reception)

(i) When WTIMn = 0

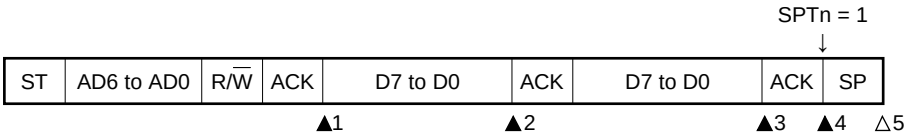

▲1: IICSn = 1000×110B
▲2: IICSn = 1000×000B
▲3: IICSn = 1000×000B (Sets the WTIMn bit to 1)[Note]
▲4: IICSn = 1000××00B (Sets the SPTn bit to 1)[Note]
△5: IICSn = 00000001B

Note To generate a stop condition, set the WTIMn bit to 1 and change the timing for generating the INTIICAn interrupt request signal.

Remark ▲: Always generated
△: Generated only when SPIEn = 1
×: Don’t care

(ii) When WTIMn = 1

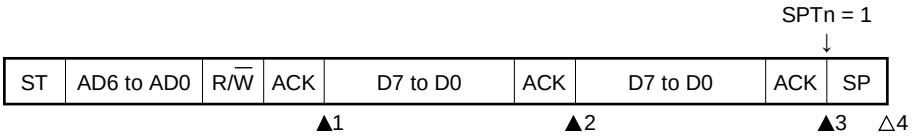

▲1: IICSn = 1000×110B
▲2: IICSn = 1000×100B
▲3: IICSn = 1000××00B (Sets the SPTn bit to 1)
△4: IICSn = 00000001B

Remark ▲: Always generated
△: Generated only when SPIEn = 1
×: Don’t care

Remark n = 0

(b) Start ~ Address ~ Data ~ Start ~ Address ~ Data ~ Stop (restart)

(i) When WTIMn = 0

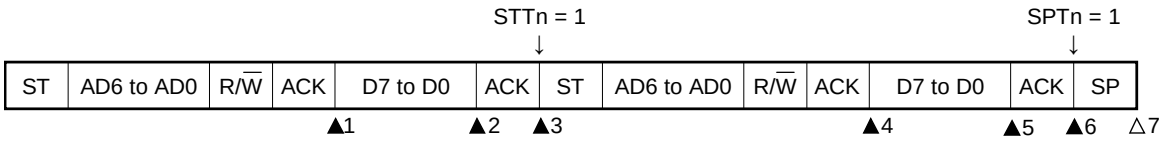

▲1: IICSn = 1000×110B
▲2: IICSn = 1000×000B (Sets the WTIMn bit to 1)[Note 1]
▲3: IICSn = 1000××00B (Clears the WTIMn bit to 0[Note 2], sets the STTn bit to 1)
▲4: IICSn = 1000×110B
▲5: IICSn = 1000×000B (Sets the WTIMn bit to 1)[Note 3]
▲6: IICSn = 1000××00B (Sets the SPTn bit to 1)
△7: IICSn = 00000001B

Notes 1. To generate a start condition, set the WTIMn bit to 1 and change the timing for generating the INTIICAn interrupt request signal.
2. Clear the WTIMn bit to 0 to restore the original setting.
3. To generate a stop condition, set the WTIMn bit to 1 and change the timing for generating the INTIICAn interrupt request signal.

Remark ▲: Always generated
△: Generated only when SPIEn = 1
×: Don't care

(ii) When WTIMn = 1

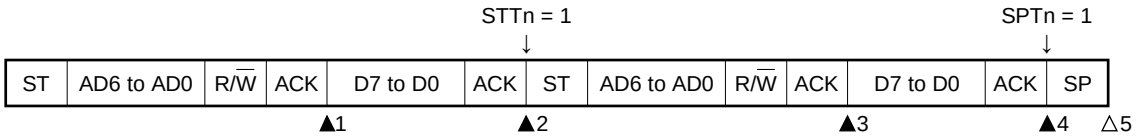

▲1: IICSn = 1000×110B
▲2: IICSn = 1000××00B (Sets the STTn bit to 1)
▲3: IICSn = 1000×110B
▲4: IICSn = 1000××00B (Sets the SPTn bit to 1)
△5: IICSn = 00000001B

Remark ▲: Always generated
△: Generated only when SPIEn = 1
×: Don't care

Remark n = 0

(c) Start ~ Code ~ Data ~ Data ~ Stop (extension code transmission)

(i) When WTIMn = 0

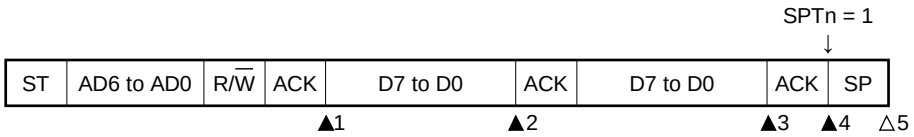

▲1: IICSn = 1010×110B
▲2: IICSn = 1010×000B
▲3: IICSn = 1010×000B (Sets the WTIMn bit to 1)[Note]
▲4: IICSn = 1010××00B (Sets the SPTn bit to 1)
△5: IICSn = 00000001B

Note To generate a stop condition, set the WTIMn bit to 1 and change the timing for generating the INTIICAn interrupt request signal.

Remark ▲: Always generated
△: Generated only when SPIEn = 1
×: Don't care

(ii) When WTIMn = 1

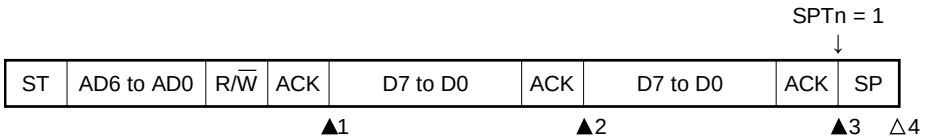

▲1: IICSn = 1010×110B
▲2: IICSn = 1010×100B
▲3: IICSn = 1010××00B (Sets the SPTn bit to 1)
△4: IICSn = 00001001B

Remark ▲: Always generated
△: Generated only when SPIEn = 1
×: Don't care

Remark n = 0

(2) Slave device operation (slave address data reception)

(a) Start ~ Address ~ Data ~ Data ~ Stop

(i) When WTIMn = 0

ST	AD6 to AD0	R/$\overline{W}$	ACK	D7 to D0	ACK	D7 to D0	ACK	SP
				▲1	▲2		▲3	△4

▲1: IICSn = 0001×110B
▲2: IICSn = 0001×000B
▲3: IICSn = 0001×000B
△4: IICSn = 00000001B

Remark ▲: Always generated
△: Generated only when SPIEn = 1
×: Don't care

(ii) When WTIMn = 1

ST	AD6 to AD0	R/$\overline{W}$	ACK	D7 to D0	ACK	D7 to D0	ACK	SP
				▲1	▲2		▲3	△4

▲1: IICSn = 0001×110B
▲2: IICSn = 0001×100B
▲3: IICSn = 0001××00B
△4: IICSn = 00000001B

Remark ▲: Always generated
△: Generated only when SPIEn = 1
×: Don't care

Remark n = 0

(b) Start ~ Address ~ Data ~ Start ~ Address ~ Data ~ Stop

(i) When WTIMn = 0 (after restart, matches with SVAn)

ST	AD6 to AD0	R/$\overline{W}$	ACK	D7 to D0	ACK	ST	AD6 to AD0	R/$\overline{W}$	ACK	D7 to D0	ACK	SP
				▲1	▲2					▲3	▲4	△5

▲1: IICSn = 0001×110B
▲2: IICSn = 0001×000B
▲3: IICSn = 0001×110B
▲4: IICSn = 0001×000B
△5: IICSn = 00000001B

Remark ▲: Always generated
△: Generated only when SPIEn = 1
×: Don’t care

(ii) When WTIMn = 1 (after restart, matches with SVAn)

ST	AD6 to AD0	R/$\overline{W}$	ACK	D7 to D0	ACK	ST	AD6 to AD0	R/$\overline{W}$	ACK	D7 to D0	ACK	SP
				▲1		▲2				▲3	▲4	△5

▲1: IICSn = 0001×110B
▲2: IICSn = 0001××00B
▲3: IICSn = 0001×110B
▲4: IICSn = 0001××00B
△5: IICSn = 00000001B

Remark ▲: Always generated
△: Generated only when SPIEn = 1
×: Don’t care

Remark n = 0

(c) Start ~ Address ~ Data ~ Start ~ Code ~ Data ~ Stop

(i) When WTIMn = 0 (after restart, does not match address (= extension code))

ST	AD6 to AD0	R/$\overline{W}$	ACK	D7 to D0	ACK	ST	AD6 to AD0	R/$\overline{W}$	ACK	D7 to D0	ACK	SP
				▲1	▲2				▲3		▲4	△5

▲1: IICSn = 0001×110B
▲2: IICSn = 0001×000B
▲3: IICSn = 0010×010B
▲4: IICSn = 0010×000B
△5: IICSn = 00000001B

Remark ▲: Always generated
△: Generated only when SPIEn = 1
×: Don't care

(ii) When WTIMn = 1 (after restart, does not match address (= extension code))

ST	AD6 to AD0	R/$\overline{W}$	ACK	D7 to D0	ACK	ST	AD6 to AD0	R/$\overline{W}$	ACK	D7 to D0	ACK	SP
				▲1		▲2			▲3	▲4	▲5	△6

▲1: IICSn = 0001×110B
▲2: IICSn = 0001××00B
▲3: IICSn = 0010×010B
▲4: IICSn = 0010×110B
▲5: IICSn = 0010××00B
△6: IICSn = 00000001B

Remark ▲: Always generated
△: Generated only when SPIEn = 1
×: Don't care

Remark n = 0

(d) Start ~ Address ~ Data ~ Start ~ Address ~ Data ~ Stop

(i) When WTIMn = 0 (after restart, does not match address (= not extension code))

ST	AD6 to AD0	R/$\overline{W}$	ACK	D7 to D0	ACK	ST	AD6 to AD0	R/$\overline{W}$	ACK	D7 to D0	ACK	SP
				▲1	▲2					▲3		△4

▲1: IICSn = 0001×110B
▲2: IICSn = 0001×000B
▲3: IICSn = 00000×10B
△4: IICSn = 00000001B

Remark ▲: Always generated
△: Generated only when SPIEn = 1
×: Don't care

(ii) When WTIMn = 1 (after restart, does not match address (= not extension code))

ST	AD6 to AD0	R/$\overline{W}$	ACK	D7 to D0	ACK	ST	AD6 to AD0	R/$\overline{W}$	ACK	D7 to D0	ACK	SP
				▲1	▲2					▲3		△4

▲1: IICSn = 0001×110B
▲2: IICSn = 0001××00B
▲3: IICSn = 00000×10B
△4: IICSn = 00000001B

Remark ▲: Always generated
△: Generated only when SPIEn = 1
×: Don't care

Remark n = 0

(3) Slave device operation (when receiving extension code)

The device is always participating in communication when it receives an extension code.

(a) Start ~ Code ~ Data ~ Data ~ Stop

(i) When WTIMn = 0

ST	AD6 to AD0	R/$\overline{W}$	ACK	D7 to D0	ACK	D7 to D0	ACK	SP
			▲1		▲2		▲3	△4

▲1: IICSn = 0010×010B
▲2: IICSn = 0010×000B
▲3: IICSn = 0010×000B
△4: IICSn = 00000001B

Remark ▲: Always generated
△: Generated only when SPIEn = 1
×: Don’t care

(ii) When WTIMn = 1

ST	AD6 to AD0	R/$\overline{W}$	ACK	D7 to D0	ACK	D7 to D0	ACK	SP
			▲1	▲2		▲3	▲4	△5

▲1: IICSn = 0010×010B
▲2: IICSn = 0010×110B
▲3: IICSn = 0010×100B
▲4: IICSn = 0010××00B
△5: IICSn = 00000001B

Remark ▲: Always generated
△: Generated only when SPIEn = 1
×: Don’t care

Remark n = 0

(b) Start ~ Code ~ Data ~ Start ~ Address ~ Data ~ Stop

(i) When WTIMn = 0 (after restart, matches SVAn)

ST	AD6 to AD0	R/$\overline{W}$	ACK	D7 to D0	ACK	ST	AD6 to AD0	R/$\overline{W}$	ACK	D7 to D0	ACK	SP
			▲1		▲2					▲3	▲4	△5

▲1: IICSn = 0010×010B
▲2: IICSn = 0010×000B
▲3: IICSn = 0001×110B
▲4: IICSn = 0001×000B
△5: IICSn = 00000001B

Remark ▲: Always generated
△: Generated only when SPIEn = 1
×: Don't care

(ii) When WTIMn = 1 (after restart, matches SVAn)

ST	AD6 to AD0	R/$\overline{W}$	ACK	D7 to D0	ACK	ST	AD6 to AD0	R/$\overline{W}$	ACK	D7 to D0	ACK	SP
			▲1	▲2		▲3				▲4	▲5	△6

▲1: IICSn = 0010×010B
▲2: IICSn = 0010×110B
▲3: IICSn = 0010××00B
▲4: IICSn = 0001×110B
▲5: IICSn = 0001××00B
△6: IICSn = 00000001B

Remark ▲: Always generated
△: Generated only when SPIEn = 1
×: Don't care

Remark n = 0

(c) Start ~ Code ~ Data ~ Start ~ Code ~ Data ~ Stop

(i) When WTIMn = 0 (after restart, extension code reception)

ST	AD6 to AD0	R/$\overline{W}$	ACK	D7 to D0	ACK	ST	AD6 to AD0	R/$\overline{W}$	ACK	D7 to D0	ACK	SP
			▲1		▲2				▲3		▲4	△5

▲1: IICSn = 0010×010B
▲2: IICSn = 0010×000B
▲3: IICSn = 0010×010B
▲4: IICSn = 0010×000B
△5: IICSn = 00000001B

Remark ▲: Always generated
△: Generated only when SPIEn = 1
×: Don't care

(ii) When WTIMn = 1 (after restart, extension code reception)

ST	AD6 to AD0	R/$\overline{W}$	ACK	D7 to D0	ACK	ST	AD6 to AD0	R/$\overline{W}$	ACK	D7 to D0	ACK	SP
			▲1	▲2		▲3			▲4	▲5	▲6	△7

▲1: IICSn = 0010×010B
▲2: IICSn = 0010×110B
▲3: IICSn = 0010××00B
▲4: IICSn = 0010×010B
▲5: IICSn = 0010×110B
▲6: IICSn = 0010××00B
△7: IICSn = 00000001B

Remark ▲: Always generated
△: Generated only when SPIEn = 1
×: Don't care

Remark n = 0

(d) Start ~ Code ~ Data ~ Start ~ Address ~ Data ~ Stop

(i) When WTIMn = 0 (after restart, does not match address (= not extension code))

ST	AD6 to AD0	R/$\overline{W}$	ACK	D7 to D0	ACK	ST	AD6 to AD0	R/$\overline{W}$	ACK	D7 to D0	ACK	SP
			▲1		▲2					▲3		△4

▲1: IICSn = 0010×010B
▲2: IICSn = 0010×000B
▲3: IICSn = 00000×10B
△4: IICSn = 00000001B

Remark ▲: Always generated
△: Generated only when SPIEn = 1
×: Don’t care

(ii) When WTIMn = 1 (after restart, does not match address (= not extension code))

ST	AD6 to AD0	R/$\overline{W}$	ACK	D7 to D0	ACK	ST	AD6 to AD0	R/$\overline{W}$	ACK	D7 to D0	ACK	SP
			▲1	▲2		▲3				▲4		△5

▲1: IICSn = 0010×010B
▲2: IICSn = 0010×110B
▲3: IICSn = 0010××00B
▲4: IICSn = 00000×10B
△5: IICSn = 00000001B

Remark ▲: Always generated
△: Generated only when SPIEn = 1
×: Don’t care

Remark n = 0

(4) Operation without communication

(a) Start ~ Code ~ Data ~ Data ~ Stop

ST	AD6 to AD0	R/$\overline{W}$	ACK	D7 to D0	ACK	D7 to D0	ACK	SP
								△1

△1: IICSn = 00000001B

Remark △: Generated only when SPIEn = 1

(5) Arbitration loss operation (operation as slave after arbitration loss)

When the device is used as a master in a multi-master system, read the MSTSn bit each time interrupt request signal INTIICAn has occurred to check the arbitration result.

(a) When arbitration loss occurs during transmission of slave address data

(i) When WTIMn = 0

ST	AD6 to AD0	R/$\overline{W}$	ACK	D7 to D0	ACK	D7 to D0	ACK	SP
				▲1	▲2		▲3	△4

▲1: IICSn = 0101×110B
▲2: IICSn = 0001×000B
▲3: IICSn = 0001×000B
△4: IICSn = 00000001B

Remark ▲: Always generated
△: Generated only when SPIEn = 1
×: Don't care

Remark n = 0

(ii) When WTIMn = 1

ST	AD6 to AD0	R/$\overline{W}$	ACK	D7 to D0	ACK	D7 to D0	ACK	SP

▲1 ▲2 ▲3 △4

▲1: IICSn = 0101×110B
▲2: IICSn = 0001×100B
▲3: IICSn = 0001××00B
△4: IICSn = 00000001B

Remark ▲: Always generated
△: Generated only when SPIEn = 1
×: Don’t care

(b) When arbitration loss occurs during transmission of extension code

(i) When WTIMn = 0

ST	AD6 to AD0	R/$\overline{W}$	ACK	D7 to D0	ACK	D7 to D0	ACK	SP

▲1 ▲2 ▲3 △4

▲1: IICSn = 0110×010B
▲2: IICSn = 0010×000B
▲3: IICSn = 0010×000B
△4: IICSn = 00000001B

Remark ▲: Always generated
△: Generated only when SPIEn = 1
×: Don’t care

Remark n = 0

(ii) When WTIMn = 1

ST	AD6 to AD0	R/$\overline{W}$	ACK	D7 to D0	ACK	D7 to D0	ACK	SP

▲1 ▲2 ▲3 ▲4 △5

▲1: IICSn = 0110×010B
▲2: IICSn = 0010×110B
▲3: IICSn = 0010×100B
▲4: IICSn = 0010××00B
△5: IICSn = 00000001B

Remark ▲: Always generated
△: Generated only when SPIEn = 1
×: Don't care

(6) Operation when arbitration loss occurs (no communication after arbitration loss)

When the device is used as a master in a multi-master system, read the MSTSn bit each time interrupt request signal INTIICAn has occurred to check the arbitration result.

(a) When arbitration loss occurs during transmission of slave address data (when WTIMn = 1)

ST	AD6 to AD0	R/$\overline{W}$	ACK	D7 to D0	ACK	D7 to D0	ACK	SP

▲1 △2

▲1: IICSn = 01000110B
△2: IICSn = 00000001B

Remark ▲: Always generated
△: Generated only when SPIEn = 1

Remark n = 0

(b) When arbitration loss occurs during transmission of extension code

ST	AD6 to AD0	R/$\overline{W}$	ACK	D7 to D0	ACK	D7 to D0	ACK	SP
			▲1					△2

▲1: IICSn = 0110×010B
Sets LRELn = 1 by software
△2: IICSn = 00000001B

Remark ▲: Always generated
△: Generated only when SPIEn = 1
×: Don't care

(c) When arbitration loss occurs during transmission of data

(i) When WTIMn = 0

ST	AD6 to AD0	R/$\overline{W}$	ACK	D7 to D0	ACK	D7 to D0	ACK	SP
				▲1	▲2			△3

▲1: IICSn = 10001110B
▲2: IICSn = 01000000B
△3: IICSn = 00000001B

Remark ▲: Always generated
△: Generated only when SPIEn = 1

Remark n = 0

(ii) When WTIMn = 1

ST	AD6 to AD0	R/$\overline{W}$	ACK	D7 to D0	ACK	D7 to D0	ACK	SP
				▲1		▲2		△3

▲1: IICSn = 10001110B
▲2: IICSn = 01000100B
△3: IICSn = 00000001B

Remark ▲: Always generated
△: Generated only when SPIEn = 1

(d) When loss occurs due to restart condition during data transfer

(i) Not extension code (Example: unmatches with SVAn)

ST	AD6 to AD0	R/$\overline{W}$	ACK	D7 to Dm	ST	AD6 to AD0	R/$\overline{W}$	ACK	D7 to D0	ACK	SP
				▲1					▲2		△3

▲1: IICSn = 1000×110B
▲2: IICSn = 01000110B
△3: IICSn = 00000001B

Remark ▲: Always generated
△: Generated only when SPIEn = 1
×: Don’t care
m = 6 to 0

Remark n = 0

(ii) Extension code

ST	AD6 to AD0	R/$\overline{W}$	ACK	D7 to Dm	ST	AD6 to AD0	R/$\overline{W}$	ACK	D7 to D0	ACK	SP
				▲1				▲2			△3

▲1: IICSn = 1000×110B
▲2: IICSn = 01100010B
Sets LRELn = 1 by software
△3: IICSn = 00000001B

Remark ▲: Always generated
△: Generated only when SPIEn = 1
×: Don’t care
m = 6 to 0

(e) When loss occurs due to stop condition during data transfer

ST	AD6 to AD0	R/$\overline{W}$	ACK	D7 to Dm	SP
				▲1	△2

▲1: IICSn = 10000110B
△2: IICSn = 01000001B

Remark ▲: Always generated
△: Generated only when SPIEn = 1
×: Don’t care
m = 6 to 0

Remark n = 0

(f) When arbitration loss occurs due to low-level data when attempting to generate a restart condition

(i) When WTIMn = 0

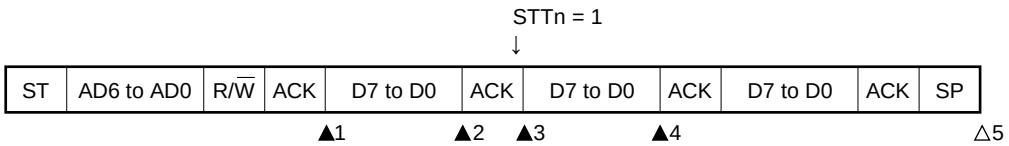

▲1: IICSn = 1000×110B
▲2: IICSn = 1000×000B (Sets the WTIMn bit to 1)
▲3: IICSn = 1000×100B (Clears the WTIMn bit to 0)
▲4: IICSn = 01000000B
△5: IICSn = 00000001B

Remark ▲: Always generated
△: Generated only when SPIEn = 1
×: Don't care

(ii) When WTIMn = 1

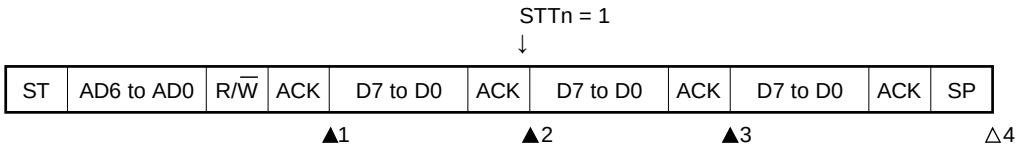

▲1: IICSn = 1000×110B
▲2: IICSn = 1000×100B (Sets the STTn bit to 1)
▲3: IICSn = 01000100B
△4: IICSn = 00000001B

Remark ▲: Always generated
△: Generated only when SPIEn = 1
×: Don't care

Remark n = 0

(g) When arbitration loss occurs due to a stop condition when attempting to generate a restart condition

(i) When WTIMn = 0

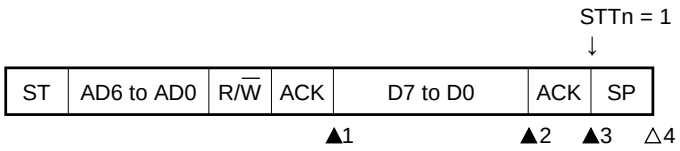

▲1: IICSn = 1000×110B
▲2: IICSn = 1000×000B (Sets the WTIMn bit to 1)
▲3: IICSn = 1000××00B (Sets the STTn bit to 1)
△4: IICSn = 01000001B

Remark ▲: Always generated
△: Generated only when SPIEn = 1
×: Don't care

(ii) When WTIMn = 1

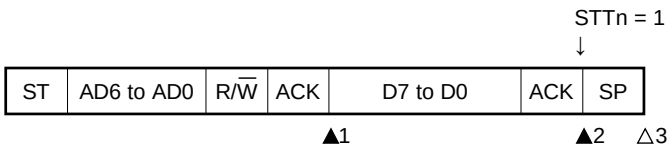

▲1: IICSn = 1000×110B
▲2: IICSn = 1000××00B (Sets the STTn bit to 1)
△3: IICSn = 01000001B

Remark ▲: Always generated
△: Generated only when SPIEn = 1
×: Don't care

Remark n = 0

(h) When arbitration loss occurs due to low-level data when attempting to generate a stop condition

(i) When WTIMn = 0

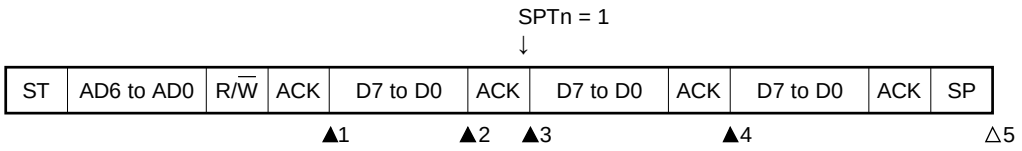

▲1: IICSn = 1000×110B
▲2: IICSn = 1000×000B (Sets the WTIMn bit to 1)
▲3: IICSn = 1000×100B (Clears the WTIMn bit to 0)
▲4: IICSn = 01000100B
△5: IICSn = 00000001B

Remark ▲: Always generated
△: Generated only when SPIEn = 1
×: Don't care

(ii) When WTIMn = 1

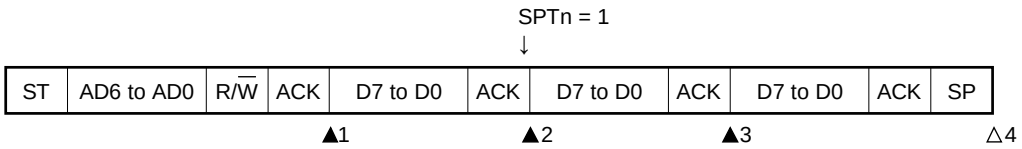

▲1: IICSn = 1000×110B
▲2: IICSn = 1000×100B (Sets the SPTn bit to 1)
▲3: IICSn = 01000100B
△4: IICSn = 00000001B

Remark ▲: Always generated
△: Generated only when SPIEn = 1
×: Don't care

Remark n = 0

15.6 Timing Charts

When using the I^2C bus mode, the master device outputs an address via the serial bus to select one of several slave devices as its communication partner.

After outputting the slave address, the master device transmits the TRCn bit (bit 3 of the IICA status register n (IICSn)), which specifies the data transfer direction, and then starts serial communication with the slave device.

Figures 15-32 and 15-33 show timing charts of the data communication.

The IICA shift register n (IICAn)'s shift operation is synchronized with the falling edge of the serial clock (SCLAn). The transmit data is transferred to the SO latch and is output (MSB first) via the SDAAn pin.

Data input via the SDAAn pin is captured into IICAn at the rising edge of SCLAn.

Remark n = 0

Figure 15-32. Example of Master to Slave Communication
(9th Cycle Clock Stretching Is Selected for Master, 9th Cycle Clock Stretching Is Selected for Slave) (1/4)

(1) Start condition ~ address ~ data

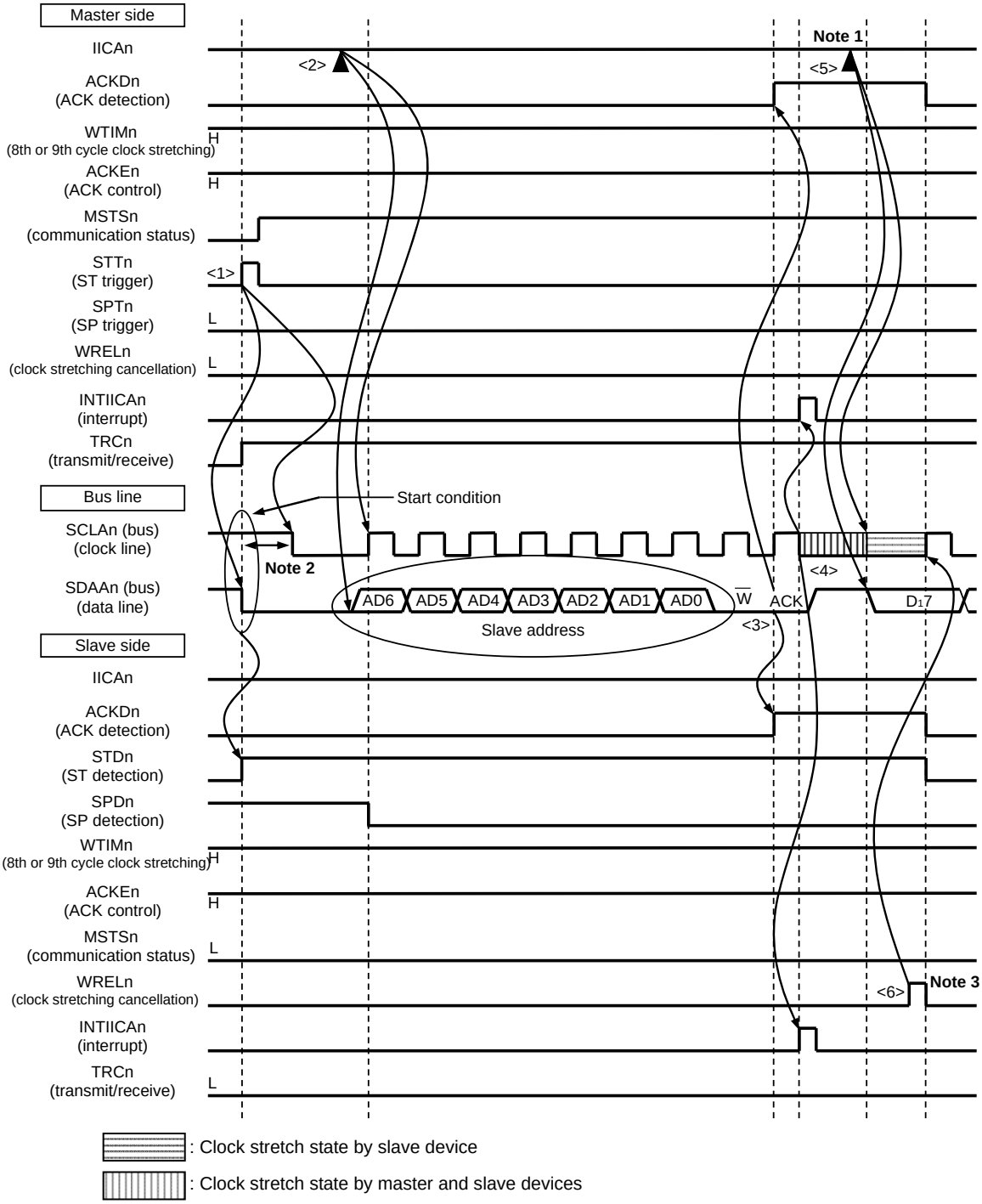

Notes 1. Write data to IICAn, not setting the WRELn bit, in order to cancel a clock stretch state during transmission by a master device.

2. Make sure that the time between the fall of the SDAAn pin signal and the fall of the SCLAn pin signal is at least 4.0 μs when specifying standard mode and at least 0.6 μs when specifying fast mode.

3. For releasing clock stretch state during reception of a slave device, write “FFH” to IICAn or set the WRELn bit.

Remark n = 0

The meanings of <1> to <6> in (1) Start condition ~ address ~ data in Figure 15-32 are explained below.

<1> The start condition trigger is set by the master device (STTn = 1) and a start condition (i.e. SCLAn = 1 changes SDAAn from 1 to 0) is generated once the bus data line goes low (SDAAn). When the start condition is subsequently detected, the master device enters the master device communication status (MSTSn = 1). The master device is ready to communicate once the bus clock line goes low (SCLAn = 0) after the hold time has elapsed.

<2> The master device writes the address + W (transmission) to the IICA shift register n (IICAn) and transmits the slave address.

<3> In the slave device if the address received matches the address (SVAn value) of a slave device[Note], that slave device sends an ACK by hardware to the master device. The ACK is detected by the master device (ACKDn = 1) at the rising edge of the 9th clock.

<4> The master device issues an interrupt (INTIICAn: end of address transmission) at the falling edge of the 9th clock. The slave device whose address matched the transmitted slave address sets a clock stretch status (SCLAn = 0) and issues an interrupt (INTIICAn: address match)[Note].

<5> The master device writes the data to transmit to the IICAn register and releases the clock stretch status that it set by the master device.

<6> If the slave device releases the clock stretch status (WRELn = 1), the master device starts transferring data to the slave device.

Note If the transmitted address does not match the address of the slave device, the slave device does not return an ACK to the master device (NACK: SDAAn = 1). The slave device also does not issue the INTIICAn interrupt (address match) and does not set a clock stretch status. The master device, however, issues the INTIICAn interrupt (end of address transmission) regardless of whether it receives an ACK or NACK.

Remarks 1. <1> to <15> in Figure 15-32 represent the entire procedure for communicating data using the I^2C bus.
Figure 15-32 (1) Start condition ~ address ~ data shows the processing from <1> to <6>, Figure 15-32 (2) Address ~ data ~ data shows the processing from <3> to <10>, and Figure 15-32 (3) Data ~ data ~ stop condition shows the processing from <7> to <15>.

2. n = 0

Figure 15-32. Example of Master to Slave Communication
(9th Cycle Clock Stretching Is Selected for Master, 9th Cycle Clock Stretching Is Selected for Slave) (2/4)

(2) Address ~ data ~ data

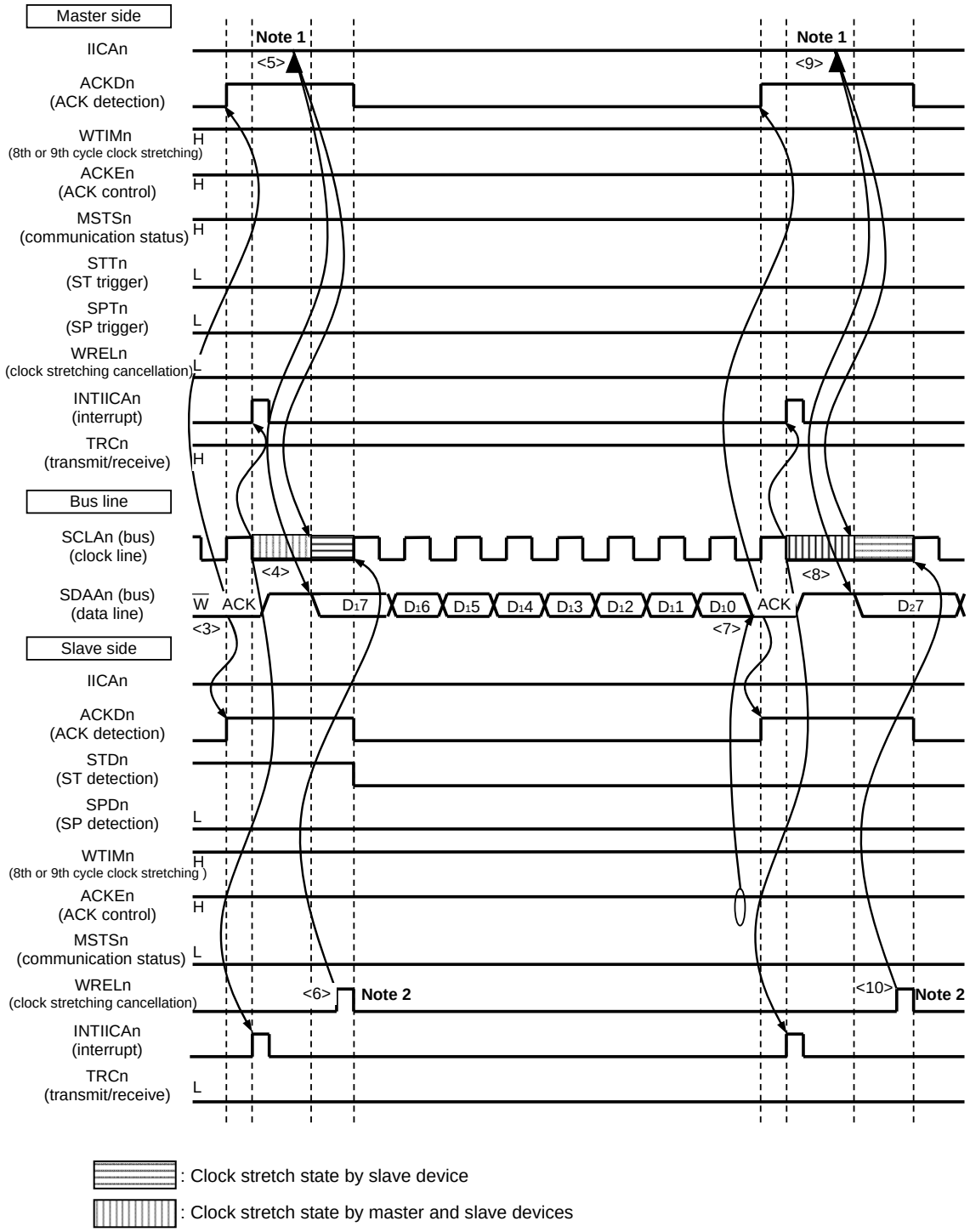

Notes 1. Write data to IICAn, not setting the WRELn bit, in order to cancel a clock stretch state during transmission by a master device.

2. For releasing clock stretch state during reception of a slave device, write “FFH” to IICAn or set the WRELn bit.

Remark n = 0

The meanings of <3> to <10> in (2) Address ~ data ~ data in Figure 15-32 are explained below.

<3> In the slave device if the address received matches the address (SVAn value) of a slave device[Note], that slave device sends an ACK by hardware to the master device. The ACK is detected by the master device (ACKDn = 1) at the rising edge of the 9th clock.

<4> The master device issues an interrupt (INTIICAn: end of address transmission) at the falling edge of the 9th clock. The slave device whose address matched the transmitted slave address sets a clock stretch status (SCLAn = 0) and issues an interrupt (INTIICAn: address match)[Note].

<5> The master device writes the data to transmit to the IICA shift register n (IICAn) and releases the clock stretch status that it set by the master device.

<6> If the slave device releases the clock stretch status (WRELn = 1), the master device starts transferring data to the slave device.

<7> After data transfer is completed, because of ACKEn = 1, the slave device sends an ACK by hardware to the master device. The ACK is detected by the master device (ACKDn = 1) at the rising edge of the 9th clock.

<8> The master device and slave device set a clock stretch status (SCLAn = 0) at the falling edge of the 9th clock, and both the master device and slave device issue an interrupt (INTIICAn: end of transfer).

<9> The master device writes the data to transmit to the IICAn register and releases the clock stretch status that it set by the master device.

<10> The slave device reads the received data and releases the clock stretch status (WRELn = 1). The master device then starts transferring data to the slave device.

Note If the transmitted address does not match the address of the slave device, the slave device does not return an ACK to the master device (NACK: SDAAn = 1). The slave device also does not issue the INTIICAn interrupt (address match) and does not set a clock stretch status. The master device, however, issues the INTIICAn interrupt (end of address transmission) regardless of whether it receives an ACK or NACK.

Remarks 1. <1> to <15> in Figure 15-32 represent the entire procedure for communicating data using the I^2C bus.
Figure 15-32 (1) Start condition ~ address ~ data shows the processing from <1> to <6>, Figure 15-32 (2) Address ~ data ~ data shows the processing from <3> to <10>, and Figure 15-32 (3) Data ~ data ~ stop condition shows the processing from <7> to <15>.

2. n = 0

Figure 15-32. Example of Master to Slave Communication
(9th Cycle Clock Stretching Is Selected for Master, 9th Cycle Clock Stretching Is Selected for Slave) (3/4)

(3) Data ~ data ~ Stop condition

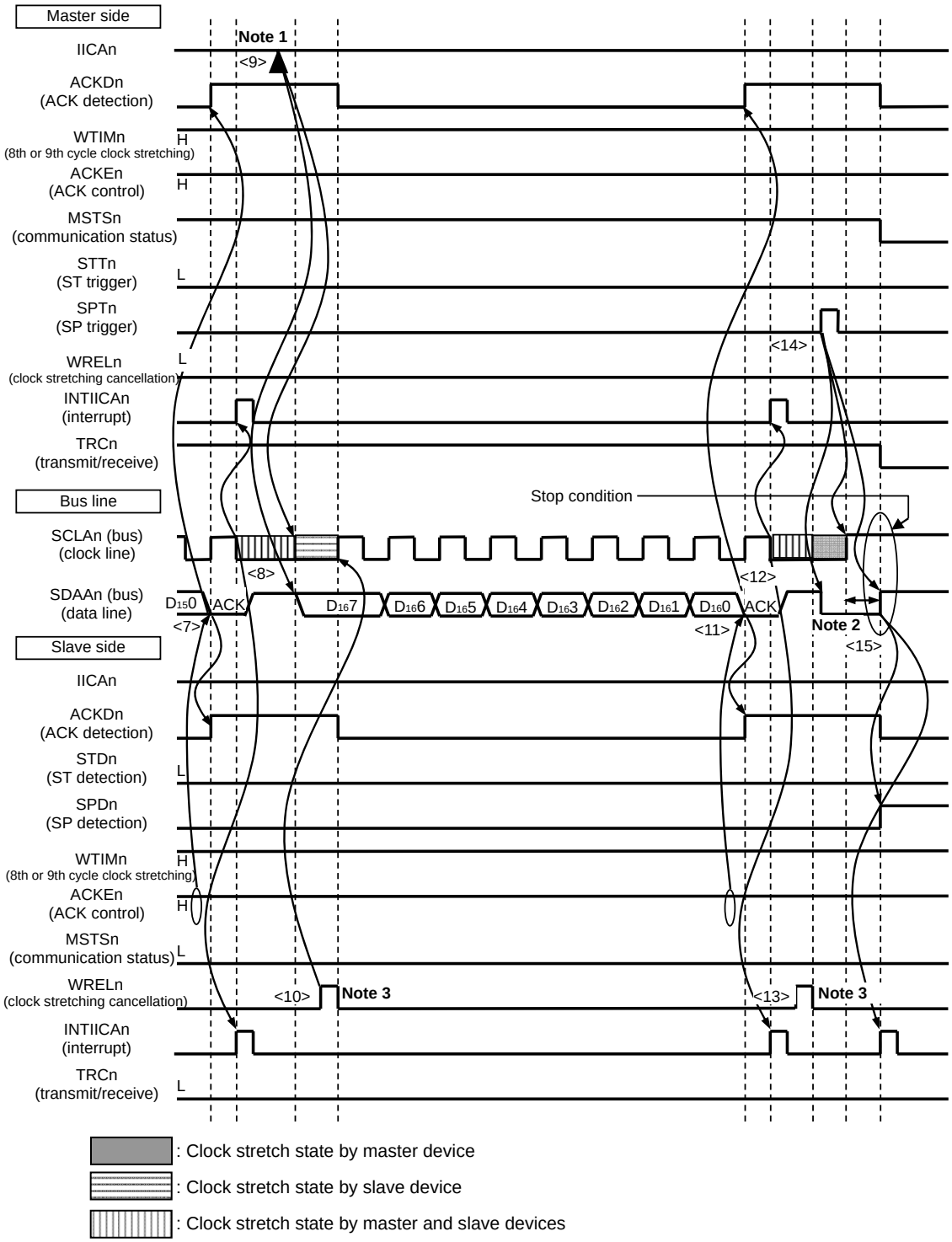

Notes 1. Write data to IICAn, not setting the WRELn bit, in order to cancel a clock stretch state during transmission by a master device.

2. Make sure that the time between the rise of the SCLAn pin signal and the generation of the stop condition after a stop condition has been issued is at least 4.0 μs when specifying standard mode and at least 0.6 μs when specifying fast mode.

3. For releasing clock stretch state during reception of a slave device, write “FFH” to IICAn or set the WRELn bit.

Remark n = 0

The meanings of <7> to <15> in (3) Data ~ data ~ stop condition in Figure 15-32 are explained below.

<7> After data transfer is completed, because of ACKEn = 1, the slave device sends an ACK by hardware to the master device. The ACK is detected by the master device (ACKDn = 1) at the rising edge of the 9th clock.

<8> The master device and slave device set a clock stretch status (SCLAn = 0) at the falling edge of the 9th clock, and both the master device and slave device issue an interrupt (INTIICAn: end of transfer).

<9> The master device writes the data to transmit to the IICA shift register n (IICAn) and releases the clock stretch status that it set by the master device.

<10> The slave device reads the received data and releases the clock stretch status (WRELn = 1). The master device then starts transferring data to the slave device.

<11> When data transfer is complete, the slave device (ACKEn =1) sends an ACK by hardware to the master device. The ACK is detected by the master device (ACKDn = 1) at the rising edge of the 9th clock.

<12> The master device and slave device set a clock stretch status (SCLAn = 0) at the falling edge of the 9th clock, and both the master device and slave device issue an interrupt (INTIICAn: end of transfer).

<13> The slave device reads the received data and releases the clock stretch status (WRELn = 1).

<14> By the master device setting a stop condition trigger (SPTn = 1), the bus data line is cleared (SDAAn = 0) and the bus clock line is set (SCLAn = 1). After the stop condition setup time has elapsed, by setting the bus data line (SDAAn = 1), the stop condition is then generated (i.e. SCLAn =1 changes SDAAn from 0 to 1).

<15> When a stop condition is generated, the slave device detects the stop condition and issues an interrupt (INTIICAn: stop condition).

Remarks 1. <1> to <15> in Figure 15-32 represent the entire procedure for communicating data using the I^2C bus.
Figure 15-32 (1) Start condition ~ address ~ data shows the processing from <1> to <6>, Figure 15-32 (2) Address ~ data ~ data shows the processing from <3> to <10>, and Figure 15-32 (3) Data ~ data ~ stop condition shows the processing from <7> to <15>.

2. n = 0

Figure 15-32. Example of Master to Slave Communication
(9th Cycle Clock Stretching Is Selected for Master, 9th Cycle Clock Stretching Is Selected for Slave) (4/4)

(4) Data ~ restart condition ~ address

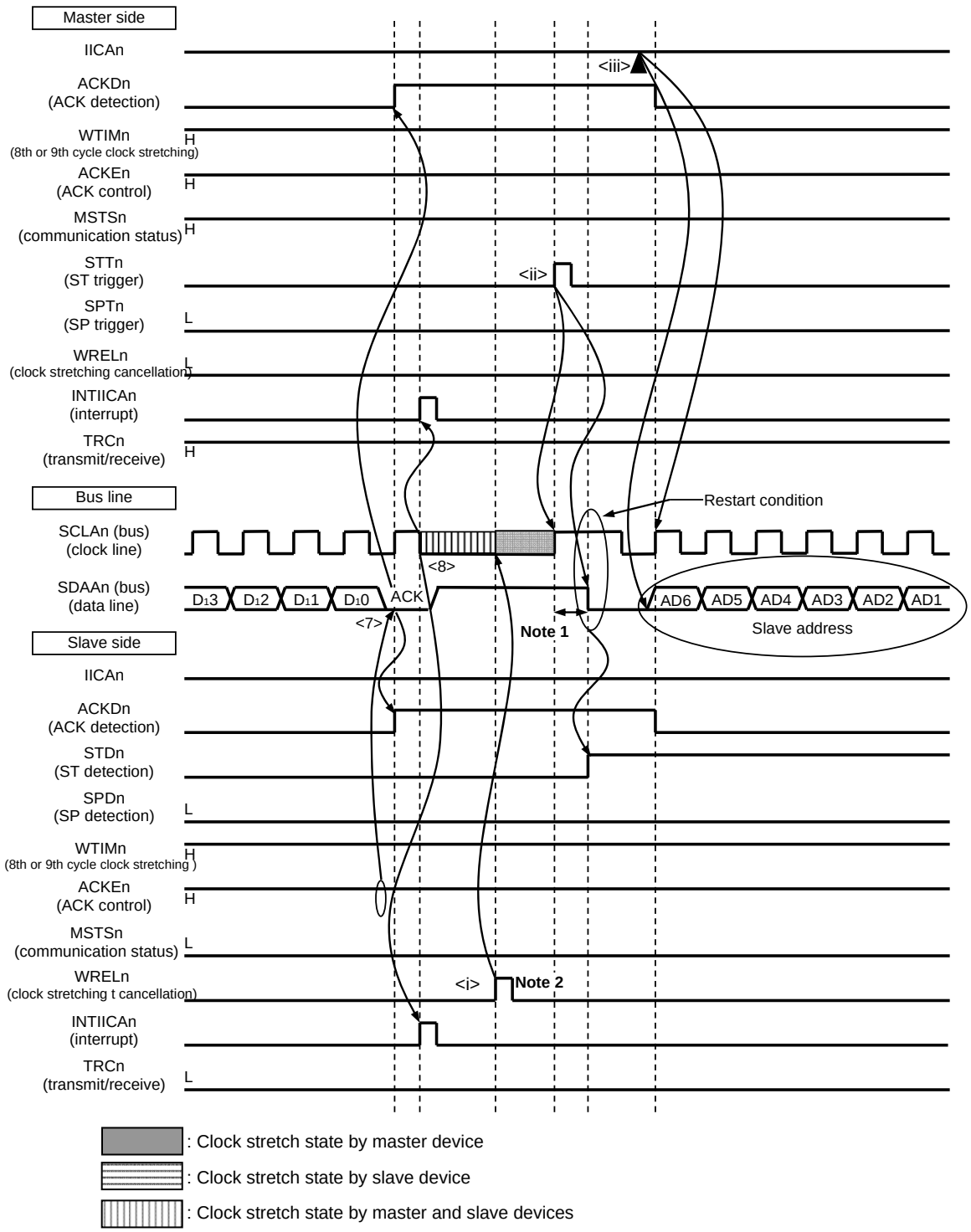

Notes 1. Make sure that the time between the rise of the SCLAn pin signal and the generation of the start condition after a restart condition has been issued is at least 4.7 μs when specifying standard mode and at least 0.6 μs when specifying fast mode.

2. For releasing clock stretch state during reception of a slave device, write “FFH” to IICAn or set the WRELn bit.

Remark n = 0

The following describes the operations in Figure 15-32 (4) Data ~ restart condition ~ address. After the operations in steps <7> and <8>, the operations in steps <i> to <iii> are performed. These steps return the processing to step <iii>, the data transmission step.

<7> After data transfer is completed, because of ACKEn = 1, the slave device sends an ACK by hardware to the master device. The ACK is detected by the master device (ACKDn = 1) at the rising edge of the 9th clock.

<8> The master device and slave device set a clock stretch status (SCLAn = 0) at the falling edge of the 9th clock, and both the master device and slave device issue an interrupt (INTIICAn: end of transfer).

<i> The slave device reads the received data and releases the clock stretch status (WRELn = 1).

<ii> The start condition trigger is set again by the master device (STTn = 1) and a start condition (i.e. SCLAn =1 changes SDAAn from 1 to 0) is generated once the bus clock line goes high (SCLAn = 1) and the bus data line goes low (SDAAn = 0) after the restart condition setup time has elapsed. When the start condition is subsequently detected, the master device is ready to communicate once the bus clock line goes low (SCLAn = 0) after the hold time has elapsed.

<iii> The master device writing the address + R/W (transmission) to the IICA shift register (IICAn) enables the slave address to be transmitted.

Remark n = 0

Figure 15-33. Example of Slave to Master Communication
(8th Cycle Clock Stretching Is Selected for Master, 9th Cycle Clock Stretching Is Selected for Slave) (1/3)

(1) Start condition ~ address ~ data

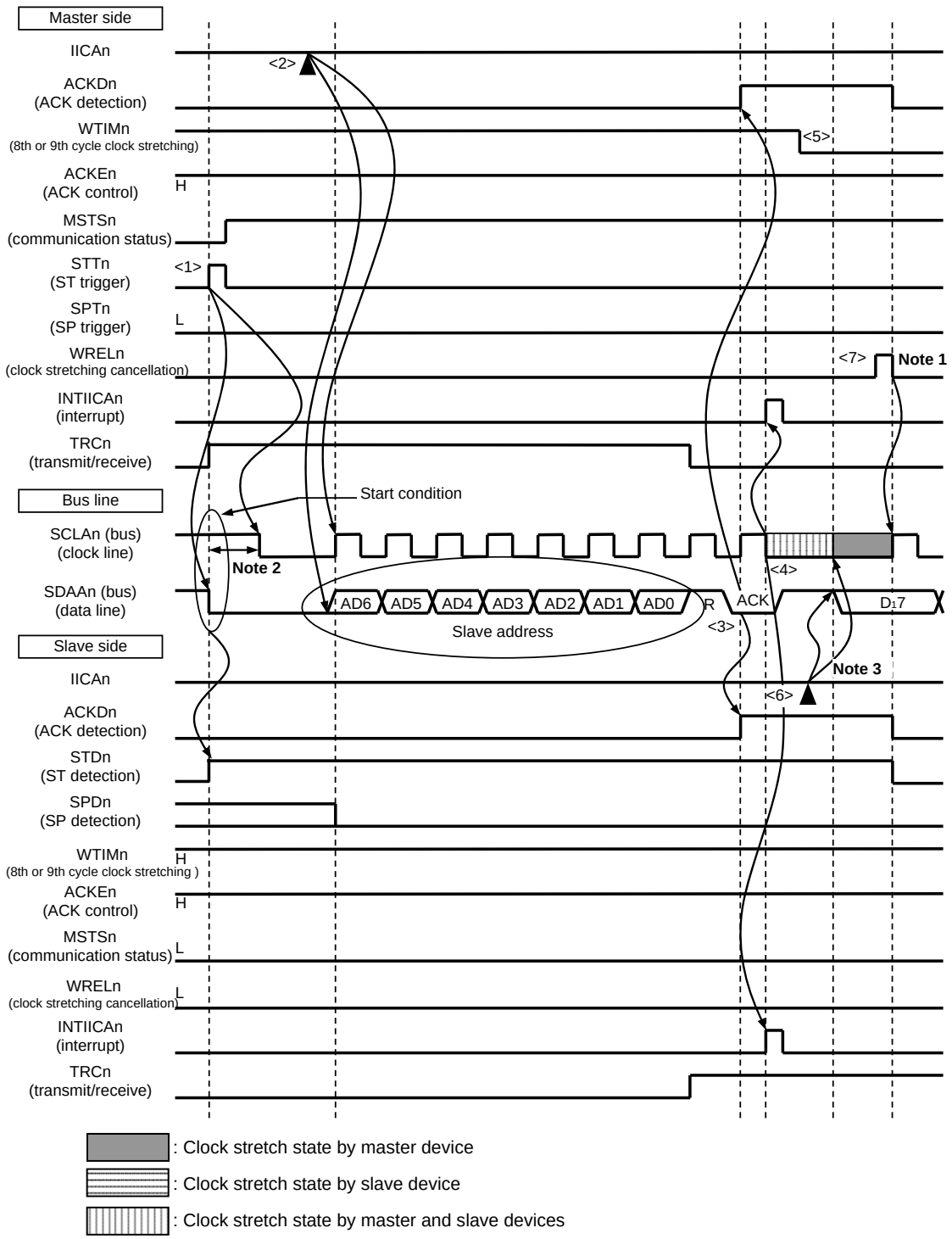

Notes 1. For releasing clock stretch state during reception of a master device, write “FFH” to IICAn or set the WRELn bit.

2. Make sure that the time between the fall of the SDAAn pin signal and the fall of the SCLAn pin signal is at least 4.0 μs when specifying standard mode and at least 0.6 μs when specifying fast mode.

3. Write data to IICAn, not setting the WRELn bit, in order to cancel a clock stretch state during transmission by a slave device.

Remark n = 0

The meanings of <1> to <7> in (1) Start condition ~ address ~ data in Figure 15-33 are explained below.

<1> The start condition trigger is set by the master device (STTn = 1) and a start condition (i.e. SCLAn =1 changes SDAAn from 1 to 0) is generated once the bus data line goes low (SDAAn). When the start condition is subsequently detected, the master device enters the master device communication status (MSTSn = 1). The master device is ready to communicate once the bus clock line goes low (SCLAn = 0) after the hold time has elapsed.

<2> The master device writes the address + R (reception) to the IICA shift register n (IICAn) and transmits the slave address.

<3> In the slave device if the address received matches the address (SVAn value) of a slave device**Note**, that slave device sends an ACK by hardware to the master device. The ACK is detected by the master device (ACKDn = 1) at the rising edge of the 9th clock.

<4> The master device issues an interrupt (INTIICAn: end of address transmission) at the falling edge of the 9th clock. The slave device whose address matched the transmitted slave address sets a clock stretch status (SCLAn = 0) and issues an interrupt (INTIICAn: address match)**Note**.

<5> The timing at which the master device sets the clock stretch status changes to the 8th clock (WTIMn = 0).

<6> The slave device writes the data to transmit to the IICAn register and releases the clock stretch status that it set by the slave device.

<7> The master device releases the clock stretch status (WRELn = 1) and starts transferring data from the slave device to the master device.

Note If the transmitted address does not match the address of the slave device, the slave device does not return an ACK to the master device (NACK: SDAAn = 1). The slave device also does not issue the INTIICAn interrupt (address match) and does not set a clock stretch status. The master device, however, issues the INTIICAn interrupt (end of address transmission) regardless of whether it receives an ACK or NACK.

Remarks 1. <1> to <19> in Figure 15-33 represent the entire procedure for communicating data using the I^2C bus.
Figure 15-33 (1) Start condition ~ address ~ data shows the processing from <1> to <7>, Figure 15-33 (2) Address ~ data ~ data shows the processing from <3> to <12>, and Figure 15-33 (3) Data ~ data ~ stop condition shows the processing from <8> to <19>.

2. n = 0

Figure 15-33. Example of Slave to Master Communication
(8th Cycle Clock Stretching Is Selected for Master, 9th Cycle Clock Stretching Is Selected for Slave) (2/3)

(2) Address ~ data ~ data

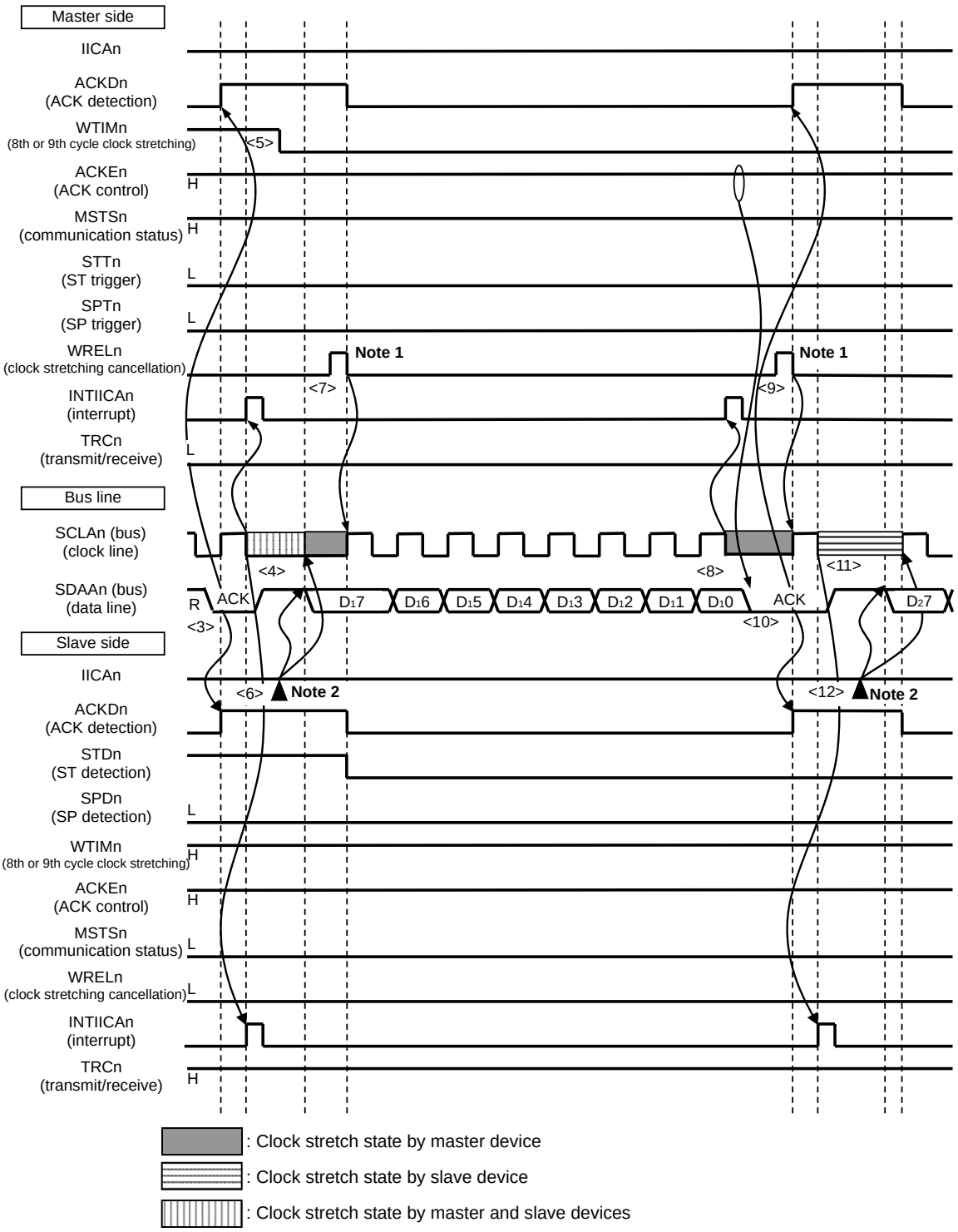

Notes 1. For releasing clock stretch state during reception of a master device, write “FFH” to IICAn or set the WRELn bit.

2. Write data to IICAn, not setting the WRELn bit, in order to cancel a clock stretch state during transmission by a slave device.

Remark n = 0

The meanings of <3> to <12> in (2) Address ~ data ~ data in Figure 15-33 are explained below.

<3> In the slave device if the address received matches the address (SVAn value) of a slave device[Note], that slave device sends an ACK by hardware to the master device. The ACK is detected by the master device (ACKDn = 1) at the rising edge of the 9th clock.

<4> The master device issues an interrupt (INTIICAn: end of address transmission) at the falling edge of the 9th clock. The slave device whose address matched the transmitted slave address sets a clock stretch status (SCLAn = 0) and issues an interrupt (INTIICAn: address match)[Note].

<5> The master device changes the timing of the clock stretch status to the 8th clock (WTIMn = 0).

<6> The slave device writes the data to transmit to the IICA shift register n (IICAn) and releases the clock stretch status that it set by the slave device.

<7> The master device releases the clock stretch status (WRELn = 1) and starts transferring data from the slave device to the master device.

<8> The master device sets a clock stretch status (SCLAn = 0) at the falling edge of the 8th clock, and issues an interrupt (INTIICAn: end of transfer). Because of ACKEn = 1 in the master device, the master device then sends an ACK by hardware to the slave device.

<9> The master device reads the received data and releases the clock stretch status (WRELn = 1).

<10> The ACK is detected by the slave device (ACKDn = 1) at the rising edge of the 9th clock.

<11> The slave device set a clock stretch status (SCLAn = 0) at the falling edge of the 9th clock, and the slave device issue an interrupt (INTIICAn: end of transfer).

<12> By the slave device writing the data to transmit to the IICAn register, the clock stretch status set by the slave device is released. The slave device then starts transferring data to the master device.

Note If the transmitted address does not match the address of the slave device, the slave device does not return an ACK to the master device (NACK: SDAAn = 1). The slave device also does not issue the INTIICAn interrupt (address match) and does not set a clock stretch status. The master device, however, issues the INTIICAn interrupt (end of address transmission) regardless of whether it receives an ACK or NACK.

Remarks 1. <1> to <19> in Figure 15-33 represent the entire procedure for communicating data using the I^2C bus.
Figure 15-33 (1) Start condition ~ address ~ data shows the processing from <1> to <7>, Figure 15-33 (2) Address ~ data ~ data shows the processing from <3> to <12>, and Figure 15-33 (3) Data ~ data ~ stop condition shows the processing from <8> to <19>.

2. n = 0

Figure 15-33. Example of Slave to Master Communication
(8th Cycle Clock Stretching is Changed to 9th Cycle Clock Stretching for Master, 9th Cycle Clock Stretching is Selected for Slave) (3/3)

(3) Data ~ data ~ stop condition

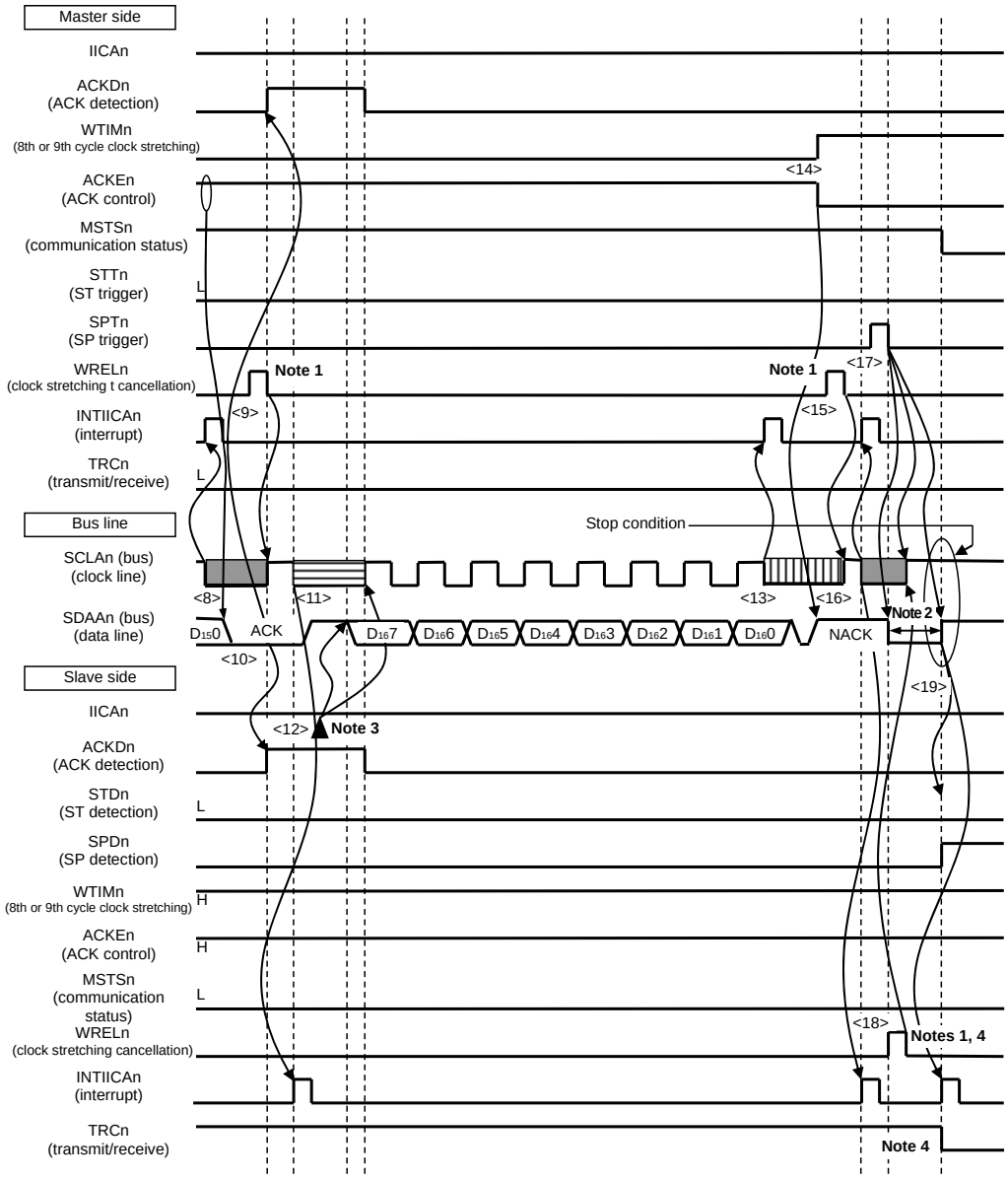

Notes 1. To cancel a clock stretch state, write “FFH” to IICAn or set the WRELn bit.

2. Make sure that the time between the rise of the SCLAn pin signal and the generation of the stop condition after a stop condition has been issued is at least 4.0 μs when specifying standard mode and at least 0.6 μs when specifying fast mode.

3. Write data to IICAn, not setting the WRELn bit, in order to cancel a clock stretch state during transmission by a slave device.

4. If a clock stretch state during transmission by a slave device is canceled by setting the WRELn bit, the TRCn bit will be cleared.

Remark n = 0

The meanings of <8> to <19> in (3) Data ~ data ~ stop condition in Figure 15-33 are explained below.

<8> The master device sets a clock stretch status (SCLAn = 0) at the falling edge of the 8th clock, and issues an interrupt (INTIICAn: end of transfer). Because of ACKEn = 0 in the master device, the master device then sends an ACK by hardware to the slave device.

<9> The master device reads the received data and releases the clock stretch status (WRELn = 1).

<10> The ACK is detected by the slave device (ACKDn = 1) at the rising edge of the 9th clock.

<11> The slave device set a clock stretch status (SCLAn = 0) at the falling edge of the 9th clock, and the slave device issue an interrupt (INTIICAn: end of transfer).

<12> By the slave device writing the data to transmit to the IICA register, the clock stretch status set by the slave device is released. The slave device then starts transferring data to the master device.

<13> The master device issues an interrupt (INTIICAn: end of transfer) at the falling edge of the 8th clock, and sets a clock stretch status (SCLAn = 0). Because ACK control (ACKEn = 1) is performed, the bus data line is at the low level (SDAAn = 0) at this stage.

<14> The master device sets NACK as the response (ACKEn = 0) and changes the timing at which it sets the clock stretch status to the 9th clock (WTIMn = 1).

<15> If the master device releases the clock stretch status (WRELn = 1), the slave device detects the NACK (ACK = 0) at the rising edge of the 9th clock.

<16> The master device and slave device set a clock stretch status (SCLAn = 0) at the falling edge of the 9th clock, and both the master device and slave device issue an interrupt (INTIICAn: end of transfer).

<17> When the master device issues a stop condition (SPTn = 1), the bus data line is cleared (SDAAn = 0) and the master device releases the clock stretch status. The master device then waits until the bus clock line is set (SCLAn = 1).

<18> The slave device acknowledges the NACK, halts transmission, and releases the clock stretch status (WRELn = 1) to end communication. Once the slave device releases the clock stretch status, the bus clock line is set (SCLAn = 1).

<19> Once the master device recognizes that the bus clock line is set (SCLAn = 1) and after the stop condition setup time has elapsed, the master device sets the bus data line (SDAAn = 1) and issues a stop condition (i.e. SCLAn =1 changes SDAAn from 0 to 1). The slave device detects the generated stop condition and slave device issue an interrupt (INTIICAn: stop condition).

Remarks 1. <1> to <19> in Figure 15-33 represent the entire procedure for communicating data using the I^2C bus.
Figure 15-33 (1) Start condition ~ address ~ data shows the processing from <1> to <7>, Figure 15-33 (2) Address ~ data ~ data shows the processing from <3> to <12>, and Figure 15-33 (3) Data ~ data ~ stop condition shows the processing from <8> to <19>.

2. n = 0

CHAPTER 16 LCD CONTROLLER/DRIVER

The number of LCD display function pins of the RL78/L13 differs depending on the product. The following table shows the number of pins of each product.

Table 16-1. Number of LCD Display Function Pins of Each Product

Item	RL78/L13															
	64 pins (R5F10WLx (x = G, F, E, D, C, A))								80 pins (R5F10WMx (x = G, F, E, D, C, A))							
LCD controller/ driver	Segment signal outputs: 36 (32) Note Common signal outputs: 8								Segment signal outputs: 51 (47) Note Common signal outputs: 8							
Multiplexed I/O port	bit 7	bit 6	bit 5	bit 4	bit 3	bit 2	bit 1	bit 0	bit 7	bit 6	bit 5	bit 4	bit 3	bit 2	bit 1	bit 0
P0	SEG 50	SEG 49	SEG 48	SEG 47	SEG 46	SEG 45	SEG 44	SEG 43	SEG 50	SEG 49	SEG 48	SEG 47	SEG 46	SEG 45	SEG 44	SEG 43
P1	SEG 42	SEG 41	SEG 40	SEG 39	SEG 38	SEG 37	SEG 36	SEG 35	SEG 42	SEG 41	SEG 40	SEG 39	SEG 38	SEG 37	SEG 36	SEG 35
P2	SEG 34	SEG 33	–	–	–	SEG 29	–	–	SEG 34	SEG 33	SEG 32	SEG 31	SEG 30	SEG 29	–	–
P3	–	–	–	–	SEG 23	SEG 22	SEG 21	SEG 20	–	–	SEG 25	SEG 24	SEG 23	SEG 22	SEG 21	SEG 20
P4	–	–	–	–	–	–	–	–	SEG 27	SEG 26	–	–	–	–	–	–
P5	SEG 11	–	–	SEG 8	SEG 7	SEG 6	–	–	SEG 11	SEG 10	SEG 9	SEG 8	SEG 7	SEG 6	SEG 5	SEG 4
P7	SEG 19	SEG 18	SEG 17	SEG 16	–	–	–	SEG 12	SEG 19	SEG 18	SEG 17	SEG 16	SEG 15	SEG 14	SEG 13	SEG 12
P13	–	–	–	–	–	–	–	–	–	–	–	–	–	–	–	SEG 28
Not multiplexed with I/O port																
COM4	SEG0								SEG0							
COM5	SEG1								SEG1							
COM6	SEG2								SEG2							
COM7	SEG3								SEG3							

Note ( ) indicates the number of signal output pins when 8 com is used.

16.1 Functions of LCD Controller/Driver

The functions of the LCD controller/driver in the RL78/L13 microcontrollers are as follows.

(1) Waveform A or B selectable
(2) The LCD driver voltage generator can switch internal voltage boosting method, capacitor split method, and external resistance division method.
(3) Automatic output of segment and common signals based on automatic display data register read
(4) The reference voltage to be generated when operating the voltage boost circuit can be selected from 16 steps (contrast adjustment).
(5) LCD blinking is available

Table 16-2 lists the maximum number of pixels that can be displayed in each display mode.

Table 16-2. Maximum Number of Pixels

(a) 64-pin products

Drive Waveform for LCD Driver	LCD Driver Voltage Generator	Bias Mode	Number of Time Slices	Maximum Number of Pixels
Waveform A	External resistance division	–	Static	36 (36 segment signals, 1 common signal)
		1/2	2	72 (36 segment signals, 2 common signals)
			3	108 (36 segment signals, 3 common signals)
		1/3	3	
			4	144 (36 segment signals, 4 common signals)
		1/4	8	256 (32 segment signals, 8 common signals)
	Internal voltage boosting	1/3	3	108 (36 segment signals, 3 common signals)
			4	144 (36 segment signals, 4 common signals)
		1/4	8	256 (32 segment signals, 8 common signals)
	Capacitor split	1/3	3	108 (36 segment signals, 3 common signals)
			4	144 (36 segment signals, 4 common signals)
Waveform B	External resistance division, internal voltage boosting	1/3	4	
		1/4	8	256 (32 segment signals, 8 common signals)
	Capacitor split	1/3	4	144 (36 segment signals, 4 common signals)

(b) 80-pin products

Drive Waveform for LCD Driver	LCD Driver Voltage Generator	Bias Mode	Number of Time Slices	Maximum Number of Pixels
Waveform A	External resistance division	–	Static	51 (51 segment signals, 1 common signal)
		1/2	2	102 (51 segment signals, 2 common signals)
			3	153 (51 segment signals, 3 common signals)
		1/3	3	
			4	204 (51 segment signals, 4 common signals)
		1/4	8	376 (47 segment signals, 8 common signals)
	Internal voltage boosting	1/3	3	153 (51 segment signals, 3 common signals)
			4	204 (51 segment signals, 4 common signals)
		1/4	8	376 (47 segment signals, 8 common signals)
	Capacitor split	1/3	3	153 (51 segment signals, 3 common signals)
			4	204 (51 segment signals, 4 common signals)
Waveform B	External resistance division, internal voltage boosting	1/3	4	
		1/4	8	376 (47 segment signals, 8 common signals)
	Capacitor split	1/3	4	204 (51 segment signals, 4 common signals)

16.2 Configuration of LCD Controller/Driver

The LCD controller/driver consists of the following hardware.

Table 16-3. Configuration of LCD Controller/Driver

Item	Configuration
Control registers	LCD mode register 0 (LCDM0) LCD mode register 1 (LCDM1) Subsystem clock supply mode control register (OSMC) LCD clock control register 0 (LCDC0) LCD boost level control register (VLCD) LCD input switch control register (ISCLCD) LCD port function registers 0 to 6 (PFSEG0 to PFSEG6) Port mode registers 0 to 5, 7, 13 (PM0 to PM5, PM7, PM13)

Figure 16-1. Block Diagram of LCD Controller/Driver

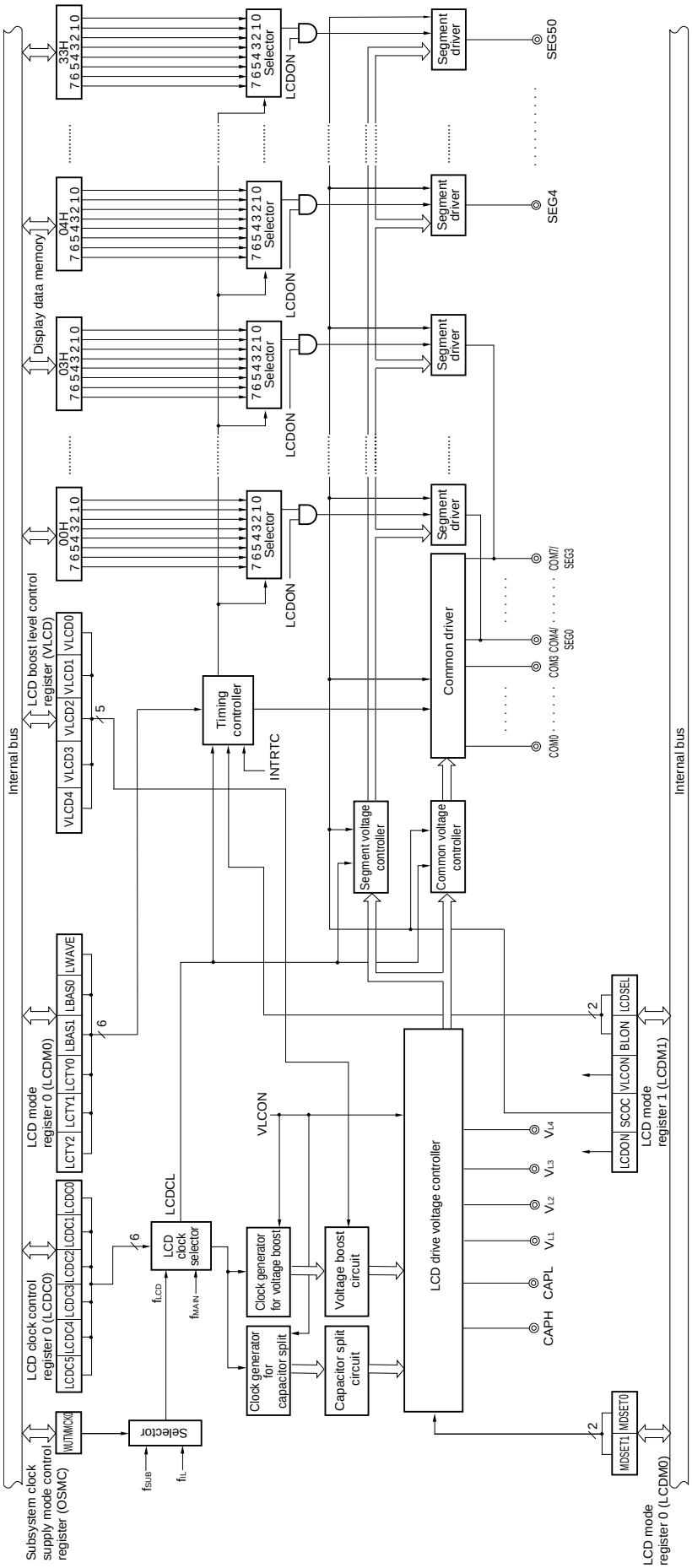

16.3 Registers Controlling LCD Controller/Driver

The following eight registers are used to control the LCD controller/driver.

- LCD mode register 0 (LCDM0)
- LCD mode register 1 (LCDM1)
- Subsystem clock supply mode control register (OSMC)
- LCD clock control register 0 (LCDC0)
- LCD boost level control register (VLCD)
- LCD input switch control register (ISCLCD)
- LCD port function registers 0 to 6 (PFSEG0 to PFSEG6)
- Port mode registers 0 to 5, 7, 13 (PM0 to PM5, PM7, PM13)

16.3.1 LCD mode register 0 (LCDM0)

LCDM0 specifies the LCD operation.

This register is set by using an 8-bit memory manipulation instruction.

Reset signal generation sets LCDM0 to 00H.

Figure 16-2. Format of LCD Mode Register 0 (LCDM0)

Address: FFF40H After reset: 00H R/W

Symbol	7	6	5	4	3	2	1	0
LCDM0	MDSET1	MDSET0	LWAVE	LDTY2	LDTY1	LDTY0	LBAS1	LBAS0

MDSET1	MDSET0	LCD drive voltage generator selection
0	0	External resistance division method
0	1	Internal voltage boosting method
1	0	Capacitor split method
1	1	Setting prohibited

LWAVE	LCD display waveform selection
0	Waveform A
1	Waveform B

LDTY2	LDTY1	LDTY0	Selection of time slice of LCD display
0	0	0	Static
0	0	1	2-time slice
0	1	0	3-time slice
0	1	1	4-time slice
1	0	1	8-time slice
Other than above			Setting prohibited

LBAS1	LBAS0	LCD display bias mode selection
0	0	1/2 bias method
0	1	1/3 bias method
1	0	1/4 bias method
1	1	Setting prohibited

Cautions 1. Do not rewrite the LCDM0 value while the SCOC bit of the LCDM1 register = 1.

2. When “Static” is selected (LDTY2 to LDTY0 bits = 000B), be sure to set the LBAS1 and LBAS0 bits to the default value (00B). Otherwise, the operation will not be guaranteed.

3. Only the combinations of display waveform, number of time slices, and bias method shown in Table 16-4 are supported.
Combinations of settings not shown in Table 16-4 are prohibited.

Table 16-4. Combinations of Display Waveform, Time Slices, Bias Method, and Frame Frequency

Display Mode			Set Value						Driving Voltage Generation Method		
Display Waveform	Number of Time Slices	Bias Mode	LWAVE	LDTY2	LDTY1	LDTY0	LBAS1	LBAS0	External Resistance Division	Internal Voltage Boosting	Capacitor Split
Waveform A	8	1/4	0	1	0	1	1	0	○ (24 to 128 Hz)	○ (24 to 64 Hz)	×
Waveform A	4	1/3	0	0	1	1	0	1	○ (24 to 128 Hz)	○ (24 to 128 Hz)	○ (24 to 128 Hz)
Waveform A	3	1/3	0	0	1	0	0	1	○ (32 to 128 Hz)	○ (32 to 128 Hz)	○ (32 to 128 Hz)
Waveform A	3	1/2	0	0	1	0	0	0	○ (32 to 128 Hz)	×	×
Waveform A	2	1/2	0	0	0	1	0	0	○ (24 to 128 Hz)	×	×
Waveform A	Static		0	0	0	0	0	0	○ (24 to 128 Hz)	×	×
Waveform B	8	1/4	1	1	0	1	1	0	○ (24 to 128 Hz)	○ (24 to 64 Hz)	×
Waveform B	4	1/3	1	0	1	1	0	1	○ (24 to 128 Hz)	○ (24 to 128 Hz)	○ (24 to 128 Hz)

Remark ○: Supported
×: Not supported

16.3.2 LCD mode register 1 (LCDM1)

LCDM1 enables or disables display operation, voltage boost circuit operation, and capacitor split circuit operation, and specifies the display data area and the low voltage mode.

LCDM1 is set using a 1-bit or 8-bit memory manipulation instruction.

Reset signal generation sets LCDM1 to 00H.

Figure 16-3. Format of LCD Mode Register 1 (LCDM1) (1/2)

Address: FFF41H After reset: 00H R/W

Symbol	<7>	<6>	<5>	<4>	<3>	2	1	<0>
LCDM1	LCDON	SCOC	VLCON	BLON	LCDSEL	0	0	LCDVLM

SCOC	LCDON	LCD display enable/disable Waveform A or B is output
0	0	Output ground level to segment/common pin
0	1	
1	0	Display off (all segment outputs are deselected.)
1	1	Display on

VLCON	Voltage boost circuit or capacitor split circuit operation enable/disable
0	Stops voltage boost circuit or capacitor split circuit operation
1[Note 1]	Enables voltage boost circuit or capacitor split circuit operation

BLON[Note 2]	LCDSEL	Display data area control
0	0	Displaying an A-pattern area data (lower four bits of LCD display data register)
0	1	Displaying a B-pattern area data (higher four bits of LCD display data register)
1	0	Alternately displaying A-pattern and B-pattern area data (blinking display corresponding to the constant-period interrupt (INTRTC) timing of real-time clock 2 (RTC2))
1	1	

Notes 1. Cannot be set during external resistance division mode.

2. When f_{IL} is selected as the LCD source clock (f_{LCD}), be sure to set the BLON bit to “0”.

(**Cautions** are listed on the next page.)

Figure 16-3. Format of LCD Mode Register 1 (LCDM1) (2/2)

Address: FFF41H After reset: 00H R/W

Symbol	<7>	<6>	<5>	<4>	<3>	2	1	<0>
LCDM1	LCDON	SCOC	VLCON	BLON	LCDSEL	0	0	LCDVLM

LCDVLM[Note]	Control of default value of voltage boosting pin
0	Set when $V_{DD} \geq 2.7$ V
1	Set when $V_{DD} \leq 4.2$ V

Note This function is used to shorten the boost stabilization time by setting the V_{Lx} pin to the default status when the voltage boost circuit is used.
If the V_{DD} voltage is 2.7 V or higher when boosting is started, set the LCDVLM bit to “0”; if the V_{DD} voltage is 4.2 V or less, set the LCDVLM bit to “1”. However, when 2.7 V ≤ V_{DD} ≤ 4.2 V, operation is possible with LCDVLM = 0 or LCDVLM = 1.

Cautions 1. When the voltage boost circuit is used, set the SCOC bit = 0 and the VLCON bit = 0, and the MDSET1 and MDSET0 bits = 00B in order to reduce power consumption when the LCD is not used. When the MDSET1 and MDSET0 bits = 01B, power is consumed by the internal reference voltage generator.

2. When the external resistance division method has been set (MDSET1 and MDSET0 of LCDM0 = 00B) or capacitor split method has been set (MDSET1 and MDSET0 = 10B), set the LCDVLM bit to 0.

3. Do not rewrite the VLCON and LCDVLM bits while the SCOC bit = 1.

4. Set the BLON and LCDSEL bits to 0 when 8 has been selected as the number of time slices for the display mode.

5. To use the internal voltage boosting method, specify the reference voltage by using the VLCD register (select the internal boosting method (by setting the MDSET1 and MDSET0 bits of the LCDM0 register to 01B) if the default reference voltage is used), wait for the reference voltage setup time (5 ms (min.)), and then set the VLCON bit to 1.

16.3.3 Subsystem clock supply mode control register (OSMC)

OSMC is used to reduce power consumption by stopping as many unnecessary clock functions as possible.

If the RTCLPC bit is set to 1, power consumption can be reduced, because clock supply to the peripheral functions, except real-time clock 2, 12-bit interval timer, clock output/buzzer output controller, and LCD controller/driver, is stopped in STOP mode or HALT mode while the subsystem clock is selected as the CPU clock.

In addition, the OSMC register can be used to select the operation clock of real-time clock 2, 12-bit interval timer, clock output/buzzer output, and LCD controller/driver.

This register is set by using an 8-bit memory manipulation instruction.

Reset signal generation sets this register to 00H.

Figure 16-4. Format of Subsystem Clock Supply Mode Control Register (OSMC)

Address: F00F3H After reset: 00H R/W

Symbol	7	6	5	4	3	2	1	0
OSMC	RTCLPC	0	0	WUTMMCK0	0	0	0	0

RTCLPC	Setting in STOP mode or HALT mode while subsystem clock is selected as CPU clock
0	Enables subsystem clock supply to peripheral functions. (See **Tables 21-1** to **21-3** for the peripheral functions whose operations are enabled.)
1	Stops subsystem clock supply to peripheral functions except real-time clock 2, 12-bit interval timer, clock output/buzzer output, and LCD controller/driver.

WUTMMCK0	Selection of operation clock for real-time clock 2, 12-bit interval timer, and LCD controller/driver	Selection of clock output from PCLBUZn pin of clock output/buzzer output controller
0	Subsystem clock (f_{SUB})	Selecting the subsystem clock (f_{SUB}) is enabled.
1	Low-speed on-chip oscillator clock (f_{IL})	Selecting the subsystem clock (f_{SUB}) is disabled.

Cautions 1. Be sure to select the subsystem clock (WUTMMCK0 bit = 0) if the subsystem clock is oscillating.

2. When WUTMMCK0 is set to 1, the low-speed on-chip oscillator clock oscillates.

3. The subsystem clock and low-speed on-chip oscillator clock can only be switched by using the WUTMMCK0 bit if real-time clock 2, 12-bit interval timer, and LCD controller/driver are all stopped.

Remark RTCE: Bit 7 of real-time clock control register 0 (RTCC0)
RINTE: Bit 15 of interval timer control register (ITMC)
SCOC: Bit 6 of LCD mode register 1 (LCDM1)
VLCON: Bit 5 of LCD mode register 1 (LCDM1)

16.3.4 LCD clock control register 0 (LCDC0)

LCDC0 specifies the LCD clock.

The frame frequency is determined according to the LCD clock and the number of time slices.

This register is set by using an 8-bit memory manipulation instruction.

Reset signal generation sets LCDC0 to 00H.

Figure 16-5. Format of LCD Clock Control Register 0 (LCDC0)

Address: FFF42H After reset: 00H R/W

Symbol	7	6	5	4	3	2	1	0
LCDC0	0	0	LCDC05	LCDC04	LCDC03	LCDC02	LCDC01	LCDC00

LCDC05	LCDC04	LCDC03	LCDC02	LCDC01	LCDC00	LCD clock (LCDCL)
0	0	0	1	0	0	$f_{SUB}/2^5$ or $f_{IL}/2^5$
0	0	0	1	0	1	$f_{SUB}/2^6$ or $f_{IL}/2^6$
0	0	0	1	1	0	$f_{SUB}/2^7$ or $f_{IL}/2^7$
0	0	0	1	1	1	$f_{SUB}/2^8$ or $f_{IL}/2^8$
0	0	1	0	0	0	$f_{SUB}/2^9$ or $f_{IL}/2^9$
0	0	1	0	0	1	$f_{SUB}/2^{10}$
0	1	0	0	1	1	$f_{MAIN}/2^{10}$
0	1	0	1	0	0	$f_{MAIN}/2^{11}$
0	1	0	1	0	1	$f_{MAIN}/2^{12}$
0	1	0	1	1	0	$f_{MAIN}/2^{13}$
0	1	0	1	1	1	$f_{MAIN}/2^{14}$
0	1	1	0	0	0	$f_{MAIN}/2^{15}$
0	1	1	0	0	1	$f_{MAIN}/2^{16}$
0	1	1	0	1	0	$f_{MAIN}/2^{17}$
0	1	1	0	1	1	$f_{MAIN}/2^{18}$
1	0	1	0	1	1	$f_{MAIN}/2^{19}$
Other than above						Setting prohibited

Cautions 1. Do not set LCDC0 when the SCOC bit of the LCDM1 register is 1.

2. Be sure to set bits 6 and 7 to "0".

3. When the internal voltage boosting method or capacitor split method is set, set the LCD clock (LCDCL) as follows:

- **512 Hz or less when f_{SUB} is selected.**
- **235 Hz or less when f_{IL} is selected.**

For details, see Table 16-4. Combinations of Display Waveform, Time Slices, Bias Method, and Frame Frequency.

Remark f_{MAIN}: Main system clock frequency

f_{IL}: Low-speed on-chip oscillator clock frequency

f_{SUB}: Subsystem clock frequency

16.3.5 LCD boost level control register (VLCD)

VLCD selects the reference voltage that is to be generated when operating the voltage boost circuit (contrast adjustment). The reference voltage can be selected from 16 steps.

This register is set by using an 8-bit memory manipulation instruction.

Reset signal generation sets VLCD to 04H.

Figure 16-6. Format of LCD Boost Level Control Register (VLCD)

Address: FFF43H After reset: 04H R/W

Symbol	7	6	5	4	3	2	1	0
VLCD	0	0	0	VLCD4	VLCD3	VLCD2	VLCD1	VLCD0

VLCD4	VLCD3	VLCD2	VLCD1	VLCD0	Reference voltage selection (contrast adjustment)	V_{L4} voltage	
						1/3 bias method	1/4 bias method
0	0	1	0	0	1.00 V (default)	3.00 V	4.00 V
0	0	1	0	1	1.05 V	3.15 V	4.20 V
0	0	1	1	0	1.10 V	3.30 V	4.40 V
0	0	1	1	1	1.15 V	3.45 V	4.60 V
0	1	0	0	0	1.20 V	3.60 V	4.80 V
0	1	0	0	1	1.25 V	3.75 V	5.00 V
0	1	0	1	0	1.30 V	3.90 V	5.20 V
0	1	0	1	1	1.35 V	4.05 V	Setting prohibited
0	1	1	0	0	1.40 V	4.20 V	Setting prohibited
0	1	1	0	1	1.45 V	4.35 V	Setting prohibited
0	1	1	1	0	1.50 V	4.50 V	Setting prohibited
0	1	1	1	1	1.55 V	4.65 V	Setting prohibited
1	0	0	0	0	1.60 V	4.80 V	Setting prohibited
1	0	0	0	1	1.65 V	4.95 V	Setting prohibited
1	0	0	1	0	1.70 V	5.10 V	Setting prohibited
1	0	0	1	1	1.75 V	5.25 V	Setting prohibited
Other than above					Setting prohibited		

Cautions 1. The VLCD setting is valid only when the voltage boost circuit is operating.

2. Be sure to set bits 5 to 7 to “0”.

3. Be sure to change the VLCD value after having stopped the operation of the voltage boost circuit (VLCON = 0).

4. To use the internal voltage boosting method, specify the reference voltage by using the VLCD register (select the internal boosting method (by setting the MDSET1 and MDSET0 bits of the LCDM0 register to 01B) if the default reference voltage is used), wait for the reference voltage setup time (5 ms (min.)), and then set VLCON to 1.

5. To use the external resistance division method or capacitor split method, use the VLCD register with its initial value (04H).

16.3.6 LCD input switch control register (ISCLCD)

Input to the Schmitt trigger buffer must be disabled until the CAPL/P126, CAPH/P127, and V_{L3}/P125 pins are set to operate as LCD function pins in order to prevent through-current from entering.

This register is set by using a 1-bit or 8-bit memory manipulation instruction.

Reset signal generation sets ISCLCD to 00H.

Figure 16-7. Format of LCD Input Switch Control Register (ISCLCD)

Address: F0308H After reset: 00H R/W

Symbol	7	6	5	4	3	2	1	0
ISCLCD	0	0	0	0	0	0	ISCVL3	ISCCAP

ISCVL3	V_{L3}/P125 pin Schmitt trigger buffer control
0	Input invalid
1	Input valid

ISCCAP	CAPL/P126, CAPH/P127 pins Schmitt trigger buffer control
0	Input invalid
1	Input valid

Caution If ISCVL3 = 0 and ISCCAP = 0, set the corresponding port registers as follows:
PU127 bit of PU12 register = 0, P127 bit of P12 register = 0
PU126 bit of PU12 register = 0, P126 bit of P12 register = 0
PU125 bit of PU12 register = 0, P125 bit of P12 register = 0

(a) Operation of ports that alternately function as V_{L3}, CAPL, and CAPH pins

The functions of the V_{L3}/P125, CAPL/P126, and CAPH/P127 pins can be selected by using the LCD input switch control register (ISCLCD), LCD mode register 0 (LCDM0), and port mode register 12 (PM12).

- **V_{L3}/P125**

Table 16-5. Settings of V_{L3}/P125 Pin Function

Bias Setting (LBAS1 and LBAS0 Bits of LCDM0 Register)	ISCVL3 Bit of ISCLCD Register	PM125 Bit of PM12 Register	Pin Function	Initial Status
Other than 1/4 bias method (LBAS1, LBAS0 = 00 or 01)	0	1	Digital input invalid mode	√
	1	0	Digital output mode	–
	1	1	Digital input mode	–
1/4 bias method (LBAS1, LBAS0 = 10)	0	1	V_{L3} function mode	–
Other than above			Setting prohibited	

The following shows the V_{L3}/P125 pin function status transitions.

Figure 16-8. V_{L3}/P125 Pin Function Status Transitions

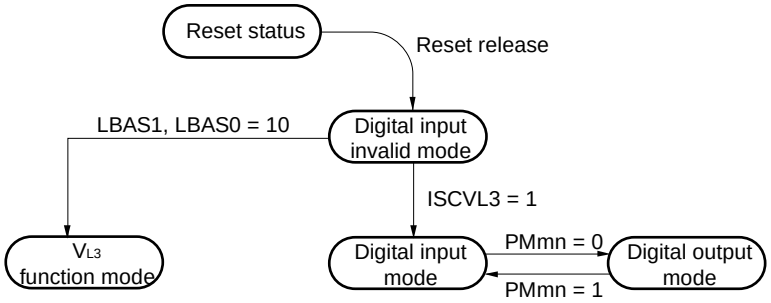

Caution Be sure to set the V_{L3} function mode before segment output starts (while SCOC bit of LCD mode register 1 (LCDM1) is 0).

● **CAPL/P126 and CAPH/P127**

Table 16-6. Settings of CAPL/P126 and CAPH/P127 Pin Functions

LCD Drive Voltage Generator (MDSET1 and MDSET0 Bits of LCDM0 Register)	ISCCAP Bit of ISCLCD Register	PM126 and PM127 Bits of PM12 Register	Pin Function	Initial Status
External resistance division (MDSET1, MDSET0 = 00)	0	1	Digital input invalid mode	√
	1	0	Digital output mode	–
	1	1	Digital input mode	–
Internal voltage boosting or capacitor split (MDSET1, MDSET0 = 01 or 10)	0	1	CAPL/CAPH function mode	–
Other than above			Setting prohibited	

The following shows the CAPL/P126 and CAPH/P127 pin function status transitions.

Figure 16-9. CAPL/P126 and CAPH/P127 Pin Function Status Transitions

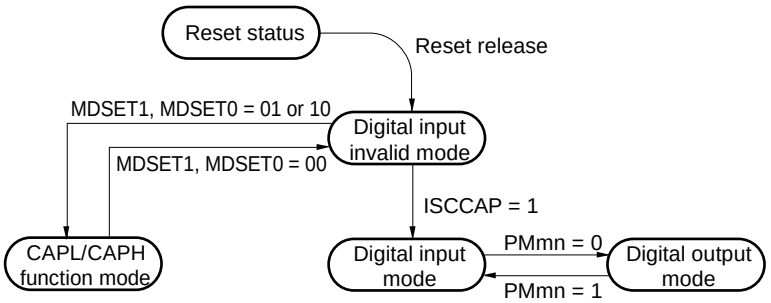

Caution Be sure to set the CAPL/CAPH function mode before segment output starts (while SCOC bit of LCD mode register 1 (LCDM1) is 0).

16.3.7 LCD port function registers 0 to 6 (PFSEG0 to PFSEG6)

These registers set whether to use pins P00 to P07, P10 to P17, P22 to P27, P30 to P35, P46, P47, P50 to P57, P70 to P77, and P130 as port pins (or alternate function pins) or segment output, and whether to use P45 as a port pin or an analog input pin.

These registers are set by using a 1-bit or 8-bit memory manipulation instruction.

Reset signal generation sets these registers to FFH (PFSEG0 is F0H, PFSEG6 is 0FH).

Remark The correspondence between the segment output pins (SEGxx) and the PFSEG register (PFSEGxx bits) and the existence of SEGxx pins in each product are shown in **Table 16-7 Segment Output Pins in Each Product and Correspondence with PFSEG Register (PFSEG Bits)**.

Figure 16-10. Format of LCD Port Function Registers 0 to 6 (80-pin Products)

Address: F0300H After reset: F0H R/W

Symbol	7	6	5	4	3	2	1	0
PFSEG0	PFSEG07	PFSEG06	PFSEG05	PFSEG04	0	0	0	0

Address: F0301H After reset: FFH R/W

Symbol	7	6	5	4	3	2	1	0
PFSEG1	PFSEG15	PFSEG14	PFSEG13	PFSEG12	PFSEG11	PFSEG10	PFSEG09	PFSEG08

Address: F0302H After reset: FFH R/W

Symbol	7	6	5	4	3	2	1	0
PFSEG2	PFSEG23	PFSEG22	PFSEG21	PFSEG20	PFSEG19	PFSEG18	PFSEG17	PFSEG16

Address: F0303H After reset: FFH R/W

Symbol	7	6	5	4	3	2	1	0
PFSEG3	PFSEG30	PFSEG29	PFSEG28	PFSEG27	PFSEG26	PFDEG	PFSEG25	PFSEG24

Address: F0304H After reset: FFH R/W

Symbol	7	6	5	4	3	2	1	0
PFSEG4	PFSEG38	PFSEG37	PFSEG36	PFSEG35	PFSEG34	PFSEG33	PFSEG32	PFSEG31

Address: F0305H After reset: FFH R/W

Symbol	7	6	5	4	3	2	1	0
PFSEG5	PFSEG46	PFSEG45	PFSEG44	PFSEG43	PFSEG42	PFSEG41	PFSEG40	PFSEG39

Address: F0306H After reset: 0FH R/W

Symbol	7	6	5	4	3	2	1	0
PFSEG6	0	0	0	0	PFSEG50	PFSEG49	PFSEG48	PFSEG47

PFSEGxx (xx = 04 to 50)	Specification of port (other than segment output)/segment output for Pmn pins (mn = 00 to 07, 10 to 17, 22 to 27, 30 to 35, 46, 47, 50 to 57, 70 to 77, 130)
0	Used as port (other than segment output)
1	Used as segment output

PFDEG	Specification of port/analog input (IVREF0) for P45 pin
0	Used as port
1	Used as analog input (IVREF0)

Remark To use the Pmn pins as segment output pins (PFSEGxx = 1), be sure to set the PUmn bit of the PUm register, POMmn bit of the POMm register, and PIMmn bit of the PIMm register to “0”.

Table 16-7. Segment Output Pins in Each Product and Correspondence with PFSEG Register (PFSEG Bits)

Bit name of PFSEG Register	Corresponding SEGxx Pins	Alternate Port	80-pin	64-pin
PFSEG04	SEG4	P50	√	–
PFSEG05	SEG5	P51	√	–
PFSEG06	SEG6	P52	√	√
PFSEG07	SEG7	P53	√	√
PFSEG08	SEG8	P54	√	√
PFSEG09	SEG9	P55	√	–
PFSEG10	SEG10	P56	√	–
PFSEG11	SEG11	P57	√	√
PFSEG12	SEG12	P70	√	√
PFSEG13	SEG13	P71	√	–
PFSEG14	SEG14	P72	√	–
PFSEG15	SEG15	P73	√	–
PFSEG16	SEG16	P74	√	√
PFSEG17	SEG17	P75	√	√
PFSEG18	SEG18	P76	√	√
PFSEG19	SEG19	P77	√	√
PFSEG20	SEG20	P30	√	√
PFSEG21	SEG21	P31	√	√
PFSEG22	SEG22	P32	√	√
PFSEG23	SEG23	P33	√	√
PFSEG24	SEG24	P34	√	–
PFSEG25	SEG25	P35	√	–
PFSEG26	SEG26	P46	√	–
PFSEG27	SEG27	P47	√	–
PFSEG28	SEG28	P130	√	–
PFSEG29	SEG29	P22	√	√
PFSEG30	SEG30	P23	√	–
PFSEG31	SEG31	P24	√	–
PFSEG32	SEG32	P25	√	–
PFSEG33	SEG33	P26	√	√
PFSEG34	SEG34	P27	√	√
PFSEG35	SEG35	P10	√	√
PFSEG36	SEG36	P11	√	√
PFSEG37	SEG37	P12	√	√
PFSEG38	SEG38	P13	√	√
PFSEG39	SEG39	P14	√	√
PFSEG40	SEG40	P15	√	√
PFSEG41	SEG41	P16	√	√
PFSEG42	SEG42	P17	√	√
PFSEG43	SEG43	P00	√	√
PFSEG44	SEG44	P01	√	√
PFSEG45	SEG45	P02	√	√
PFSEG46	SEG46	P03	√	√
PFSEG47	SEG47	P04	√	√
PFSEG48	SEG48	P05	√	√
PFSEG49	SEG49	P06	√	√
PFSEG50	SEG50	P07	√	√

(a) Operation of ports that alternately function as SEGxx pins

The functions of ports that also serve as segment output pins (SEGxx) can be selected by using the port mode control register (PMCxx), port mode register (PMxx), and LCD port function registers 0 to 6 (PFSEG0 to PFSEG6).

- **P00 to P07, P14 to P17, P30 to P35, P46, P47, P50 to P57, P70 to P77, P130 (ports that do not serve as analog input pins (ANIxx))**

Table 16-8. Settings of SEGxx/Port Pin Function

PFSEGxx Bit of PFSEG0 to PFSEG6 Registers	PMxx Bit of PMxx Register	Pin Function	Initial Status
1	1	Digital input invalid mode	√
0	0	Digital output mode	–
0	1	Digital input mode	–
1	0	Segment output mode	–

The following shows the SEGxx/port pin function status transitions.

Figure 16-11. SEGxx/Port Pin Function Status Transitions

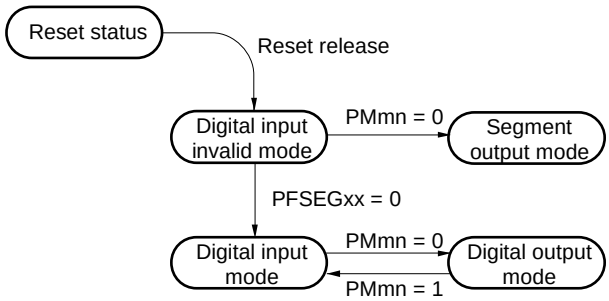

Caution Be sure to set the segment output mode before segment output starts (while SCOC bit of LCD mode register 1 (LCDM1) is 0).

● **P10 to P13, P22 to P27 (ports that serve as analog input pins (ANIxx))**

Table 16-9. Settings of ANIxx/SEGxx/Port Pin Function

PMCxx Bit of PMCxx Register	PFSEGxx Bit of PFSEG3 and PFSEG4 Registers	PMxx Bit of PMxx Register	Pin Function	Initial Status
1	1	1	Analog input mode	√
0	0	0	Digital output mode	–
0	0	1	Digital input mode	–
0	1	0	Segment output mode	–
0	1	1	Digital input invalid mode	–
Other than above			Setting prohibited	

The following shows the ANIxx/SEGxx/port pin function status transitions.

Figure 16-12. ANIxx/SEGxx/Port Pin Function Status Transitions

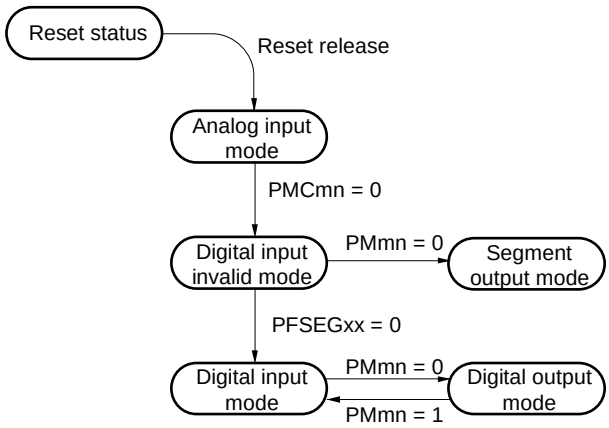

Caution Be sure to set the segment output mode before segment output starts (while SCOC bit of LCD mode register 1 (LCDM1) is 0).

16.3.8 Port mode registers 0 to 5, 7, 13 (PM0 to PM5, PM7, PM13)

These registers specify input/output of ports 0 to 5, 7, and 13 in 1-bit units.

When using the ports (such as P00/SEG43/SO00/TxD0/TOOLTxD) to be shared with the segment output pin for segment output, set the port mode register (PMxx) bit and port register (Pxx) bit corresponding to each port to 0.

Example: When using P00/SEG43/SO00/TxD0/TOOLTxD for segment output
Set the PM00 bit of port mode register 0 to “0”.
Set the P00 bit of port register 0 to “0”.

These registers are set by using a 1-bit or 8-bit memory manipulation instruction.

Reset signal generation sets these registers to FFH.

Figure 16-13. Format of Port Mode Registers 0 to 5, 7, 13 (PM0 to PM5, PM7, PM13) (80-pin Products)

Symbol	7	6	5	4	3	2	1	0	Address	After reset	R/W
PM0	PM07	PM06	PM05	PM04	PM03	PM02	PM01	PM00	FFF20H	FFH	R/W
PM1	PM17	PM16	PM15	PM14	PM13	PM12	PM11	PM10	FFF21H	FFH	R/W
PM2	PM27	PM26	PM25	PM24	PM23	PM22	PM21	PM20	FFF22H	FFH	R/W
PM3	1	1	PM35	PM34	PM33	PM32	PM31	PM30	FFF23H	FFH	R/W
PM4	PM47	PM46	PM45	PM44	PM43	PM42	PM41	PM40	FFF24H	FFH	R/W
PM5	PM57	PM56	PM55	PM54	PM53	PM52	PM51	PM50	FFF25H	FFH	R/W
PM7	PM77	PM76	PM75	PM74	PM73	PM72	PM71	PM70	FFF27H	FFH	R/W
PM13	1	1	1	1	1	1	1	PM130	FFF2DH	FFH	R/W

PMmn	Pmn pin I/O mode selection (m = 0 to 5, 7, 13; n = 0 to 7)
0	Output mode (output buffer on)
1	Input mode (output buffer off)

Remark The figure shown above presents the format of port mode registers 0 to 5, 7, and 13 of the 80-pin products. The format of the port mode register of other products, see **Table 4-3. PMxx, Pxx, PUxx, PIMxx, POMxx, and PMCxx Registers and Bits Mounted on Each Product**.

16.4 LCD Display Data Registers

The LCD display data registers are mapped as shown in Table 16-10. The contents displayed on the LCD can be changed by changing the contents of the LCD display data registers.

Table 16-10. Relationship Between LCD Display Data Register Contents and Segment/Common Outputs (1/4)

(a) Other than 8-time-slice (static, 2-time slice, 3-time slice, and 4-time slice) (1/2)

Register Name	Address	bit 7	bit 6	bit 5	bit 4	bit 3	bit 2	bit 1	bit 0	80-pin	64-pin
		COM7	COM6	COM5	COM4	COM3	COM2	COM1	COM0		
SEG0	F0400H	SEG0 (B-pattern area)				SEG0 (A-pattern area)				√	√
SEG1	F0401H	SEG1 (B-pattern area)				SEG1 (A-pattern area)				√	√
SEG2	F0402H	SEG2 (B-pattern area)				SEG2 (A-pattern area)				√	√
SEG3	F0403H	SEG3 (B-pattern area)				SEG3 (A-pattern area)				√	√
SEG4	F0404H	SEG4 (B-pattern area)				SEG4 (A-pattern area)				√	–
SEG5	F0405H	SEG5 (B-pattern area)				SEG5 (A-pattern area)				√	–
SEG6	F0406H	SEG6 (B-pattern area)				SEG6 (A-pattern area)				√	√
SEG7	F0407H	SEG7 (B-pattern area)				SEG7 (A-pattern area)				√	√
SEG8	F0408H	SEG8 (B-pattern area)				SEG8 (A-pattern area)				√	√
SEG9	F0409H	SEG9 (B-pattern area)				SEG9 (A-pattern area)				√	–
SEG10	F040AH	SEG10 (B-pattern area)				SEG10 (A-pattern area)				√	–
SEG11	F040BH	SEG11 (B-pattern area)				SEG11 (A-pattern area)				√	√
SEG12	F040CH	SEG12 (B-pattern area)				SEG12 (A-pattern area)				√	√
SEG13	F040DH	SEG13 (B-pattern area)				SEG13 (A-pattern area)				√	–
SEG14	F040EH	SEG14 (B-pattern area)				SEG14 (A-pattern area)				√	–
SEG15	F040FH	SEG15 (B-pattern area)				SEG15 (A-pattern area)				√	–
SEG16	F0410H	SEG16 (B-pattern area)				SEG16 (A-pattern area)				√	√
SEG17	F0411H	SEG17 (B-pattern area)				SEG17 (A-pattern area)				√	√
SEG18	F0412H	SEG18 (B-pattern area)				SEG18 (A-pattern area)				√	√
SEG19	F0413H	SEG19 (B-pattern area)				SEG19 (A-pattern area)				√	√
SEG20	F0414H	SEG20 (B-pattern area)				SEG20 (A-pattern area)				√	√
SEG21	F0415H	SEG21 (B-pattern area)				SEG21 (A-pattern area)				√	√
SEG22	F0416H	SEG22 (B-pattern area)				SEG22 (A-pattern area)				√	√
SEG23	F0417H	SEG23 (B-pattern area)				SEG23 (A-pattern area)				√	√
SEG24	F0418H	SEG24 (B-pattern area)				SEG24 (A-pattern area)				√	–
SEG25	F0419H	SEG25 (B-pattern area)				SEG25 (A-pattern area)				√	–
Use prohibited	F041AH	Use prohibited									
SEG26	F041BH	SEG26 (B-pattern area)				SEG26 (A-pattern area)				√	–
SEG27	F041CH	SEG27 (B-pattern area)				SEG27 (A-pattern area)				√	–
SEG28	F041DH	SEG28 (B-pattern area)				SEG28 (A-pattern area)				√	–
SEG29	F041EH	SEG29 (B-pattern area)				SEG29 (A-pattern area)				√	√
SEG30	F041FH	SEG30 (B-pattern area)				SEG30 (A-pattern area)				√	–
SEG31	F0420H	SEG31 (B-pattern area)				SEG31 (A-pattern area)				√	–
SEG32	F0421H	SEG32 (B-pattern area)				SEG32 (A-pattern area)				√	–

Table 16-10. Relationship Between LCD Display Data Register Contents and Segment/Common Outputs (2/4)

(a) Other than 8-time-slice (static, 2-time slice, 3-time slice, and 4-time slice) (2/2)

Register Name	Address	bit 7	bit 6	bit 5	bit 4	bit 3	bit 2	bit 1	bit 0	80-pin	64-pin
		COM7	COM6	COM5	COM4	COM3	COM2	COM1	COM0		
SEG33	F0422H	SEG33 (B-pattern area)				SEG33 (A-pattern area)				√	√
SEG34	F0423H	SEG34 (B-pattern area)				SEG34 (A-pattern area)				√	√
SEG35	F0424H	SEG35 (B-pattern area)				SEG35 (A-pattern area)				√	√
SEG36	F0425H	SEG36 (B-pattern area)				SEG36 (A-pattern area)				√	√
SEG37	F0426H	SEG37 (B-pattern area)				SEG37 (A-pattern area)				√	√
SEG38	F0427H	SEG38 (B-pattern area)				SEG38 (A-pattern area)				√	√
SEG39	F0428H	SEG39 (B-pattern area)				SEG39 (A-pattern area)				√	√
SEG40	F0429H	SEG40 (B-pattern area)				SEG40 (A-pattern area)				√	√
SEG41	F042AH	SEG41 (B-pattern area)				SEG41 (A-pattern area)				√	√
SEG42	F042BH	SEG42 (B-pattern area)				SEG42 (A-pattern area)				√	√
SEG43	F042CH	SEG43 (B-pattern area)				SEG43 (A-pattern area)				√	√
SEG44	F042DH	SEG44 (B-pattern area)				SEG44 (A-pattern area)				√	√
SEG45	F042EH	SEG45 (B-pattern area)				SEG45 (A-pattern area)				√	√
SEG46	F042FH	SEG46 (B-pattern area)				SEG46 (A-pattern area)				√	√
SEG47	F0430H	SEG47 (B-pattern area)				SEG47 (A-pattern area)				√	√
SEG48	F0431H	SEG48 (B-pattern area)				SEG48 (A-pattern area)				√	√
SEG49	F0432H	SEG49 (B-pattern area)				SEG49 (A-pattern area)				√	√
SEG50	F0433H	SEG50 (B-pattern area)				SEG50 (A-pattern area)				√	√

Remark √: Supported, –: Not supported

Table 16-10. Relationship Between LCD Display Data Register Contents and Segment/Common Outputs (3/4)

(b) 8-time slice (1/2)

Register Name	Address	bit 7	bit 6	bit 5	bit 4	bit 3	bit 2	bit 1	bit 0	80-pin	64-pin
		COM7	COM6	COM5	COM4	COM3	COM2	COM1	COM0		
SEG0	F0400H	SEG0[Note]								√	√
SEG1	F0401H	SEG1[Note]								√	√
SEG2	F0402H	SEG2[Note]								√	√
SEG3	F0403H	SEG3[Note]								√	√
SEG4	F0404H	SEG4								√	–
SEG5	F0405H	SEG5								√	–
SEG6	F0406H	SEG6								√	√
SEG7	F0407H	SEG7								√	√
SEG8	F0408H	SEG8								√	√
SEG9	F0409H	SEG9								√	–
SEG10	F040AH	SEG10								√	–
SEG11	F040BH	SEG11								√	√
SEG12	F040CH	SEG12								√	√
SEG13	F040DH	SEG13								√	–
SEG14	F040EH	SEG14								√	–
SEG15	F040FH	SEG15								√	–
SEG16	F0410H	SEG16								√	√
SEG17	F0411H	SEG17								√	√
SEG18	F0412H	SEG18								√	√
SEG19	F0413H	SEG19								√	√
SEG20	F0414H	SEG20								√	√
SEG21	F0415H	SEG21								√	√
SEG22	F0416H	SEG22								√	√
SEG23	F0417H	SEG23								√	√
SEG24	F0418H	SEG24								√	–
SEG25	F0419H	SEG25								√	–
Use prohibited	F041AH	Use prohibited									
SEG26	F041BH	SEG26								√	–
SEG27	F041CH	SEG27								√	–
SEG28	F041DH	SEG28								√	–
SEG29	F041EH	SEG29								√	√
SEG30	F041FH	SEG30								√	–
SEG31	F0420H	SEG31								√	–
SEG32	F0421H	SEG32								√	–
SEG33	F0422H	SEG33								√	√
SEG34	F0423H	SEG34								√	√
SEG35	F0424H	SEG35								√	√
SEG36	F0425H	SEG36								√	√
SEG37	F0426H	SEG37								√	√
SEG38	F0427H	SEG38								√	√
SEG39	F0428H	SEG39								√	√

Table 16-10. Relationship Between LCD Display Data Register Contents and Segment/Common Outputs (4/4)

(b) 8-time slice (2/2)

Register Name	Address	bit 7	bit 6	bit 5	bit 4	bit 3	bit 2	bit 1	bit 0	80-pin	64-pin
		COM7	COM6	COM5	COM4	COM3	COM2	COM1	COM0		
SEG40	F0429H	SEG40								√	√
SEG41	F042AH	SEG41								√	√
SEG42	F042BH	SEG42								√	√
SEG43	F042CH	SEG43								√	√
SEG44	F042DH	SEG44								√	√
SEG45	F042EH	SEG45								√	√
SEG46	F042FH	SEG46								√	√
SEG47	F0430H	SEG47								√	√
SEG48	F0431H	SEG48								√	√
SEG49	F0432H	SEG49								√	√
SEG50	F0433H	SEG50								√	√

Note The COM4 to COM7 pins and SEG0 to SEG3 pins are used alternatively.

Remark √: Supported, –: Not supported

To use the LCD display data register when the number of time slices is static, two, three, or four, the lower four bits and higher four bits of each address of the LCD display data register become an A-pattern area and a B-pattern area, respectively.

The correspondences between A-pattern area data and COM signals are as follows: bit 0 ↔ COM0, bit 1 ↔ COM1, bit 2 ↔ COM2, and bit 3 ↔ COM3.

The correspondences between B-pattern area data and COM signals are as follows: bit 4 ↔ COM0, bit 5 ↔ COM1, bit 6 ↔ COM2, and bit 7 ↔ COM3.

A-pattern area data will be displayed on the LCD panel when BLON = LCDSEL = 0 has been selected, and B-pattern area data will be displayed on the LCD panel when BLON = 0 and LCDSEL = 1 have been selected.

16.5 Selection of LCD Display Register

With RL78/L13, to use the LCD display data registers when the number of time slices is static, two, three, or four, the LCD display data register can be selected from the following three types, according to the BLON and LCDSEL bit settings.

- Displaying an A-pattern area data (lower four bits of LCD display data register)
- Displaying a B-pattern area data (higher four bits of LCD display data register)
- Alternately displaying A-pattern and B-pattern area data (blinking display corresponding to the constant-period interrupt timing of real-time clock 2 (RTC2))

Caution When the number of time slices is eight, LCD display data registers (A-pattern, B-pattern, or blinking display) cannot be selected.

Figure 16-14. Example of Setting LCD Display Registers When Pattern Is Changed

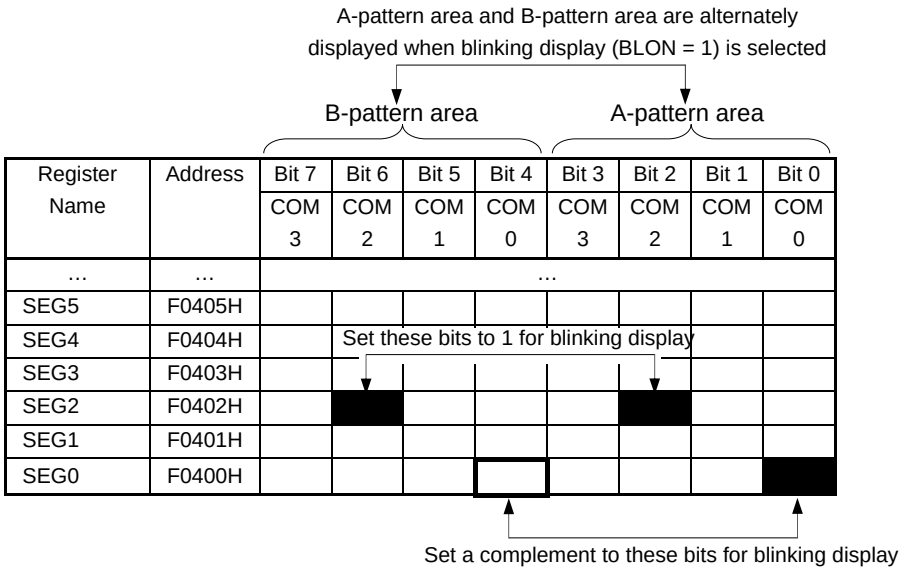

16.5.1 A-pattern area and B-pattern area data display

When BLON = LCDSEL = 0, A-pattern area (lower four bits of the LCD display data register) data will be output as the LCD display register.

When BLON = 0, and LCDSEL = 1, B-pattern area (higher four bits of the LCD display data register) data will be output as the LCD display register.

See **16.4 LCD Display Data Registers** for details about the display area.

16.5.2 Blinking display (Alternately displaying A-pattern and B-pattern area data)

When BLON = 1 has been set, A-pattern and B-pattern area data will be alternately displayed, according to the constant-period interrupt (INTRTC) timing of real-time clock 2 (RTC2). See **CHAPTER 8 REAL-TIME CLOCK 2** about the setting of the RTC2 constant-period interrupt (INTRTC, 0.5 s setting only) timing.

For blinking display of the LCD, set inverted values to the B-pattern area bits corresponding to the A-pattern area bits. (Example: Write 1 to bit 0 of 00H, and set 0 to bit 4 of F0400H for blinking display.) When not setting blinking display of the LCD, set the same values. (Example: Write 1 to bit 2 of F0402H, and write 1 to bit 6 of F0402H for lighting display.)

See **16.4 LCD Display Data Registers** for details about the display area.

Next, the timing operation of display switching is shown.

Figure 16-15. Switching Operation from A-Pattern Display to Blinking Display

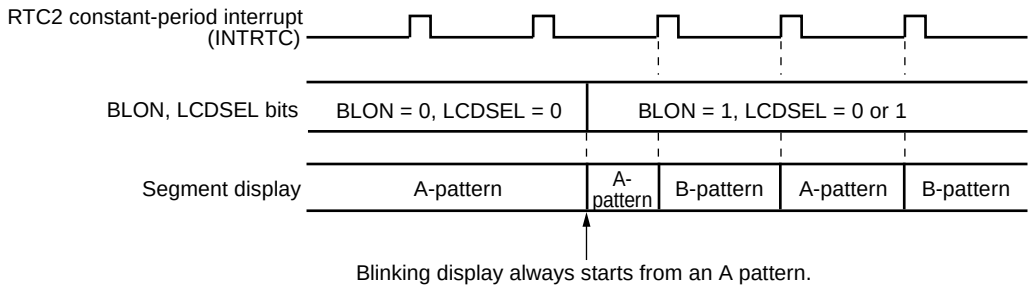

Figure 16-16. Switching Operation from Blinking Display to A-Pattern Display

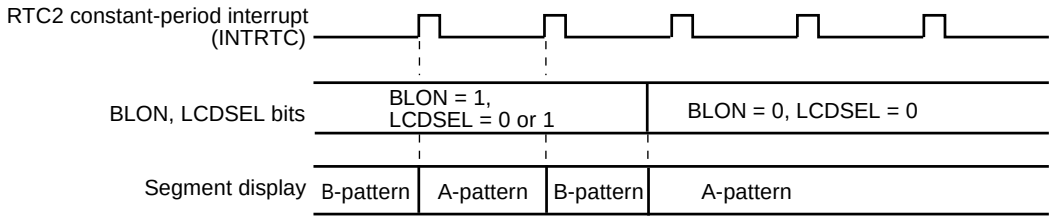

16.6 Setting the LCD Controller/Driver

Set the LCD controller/driver using the following procedure.

Cautions 1. To operate the LCD controller/driver, be sure to follow procedures (1) to (3). Unless these procedures are observed, the operation will not be guaranteed.

2. The steps shown in the flowcharts in (1) to (3) are performed by the CPU.

(1) External resistance division method

Figure 16-17. External Resistance Division Method Setting Procedure

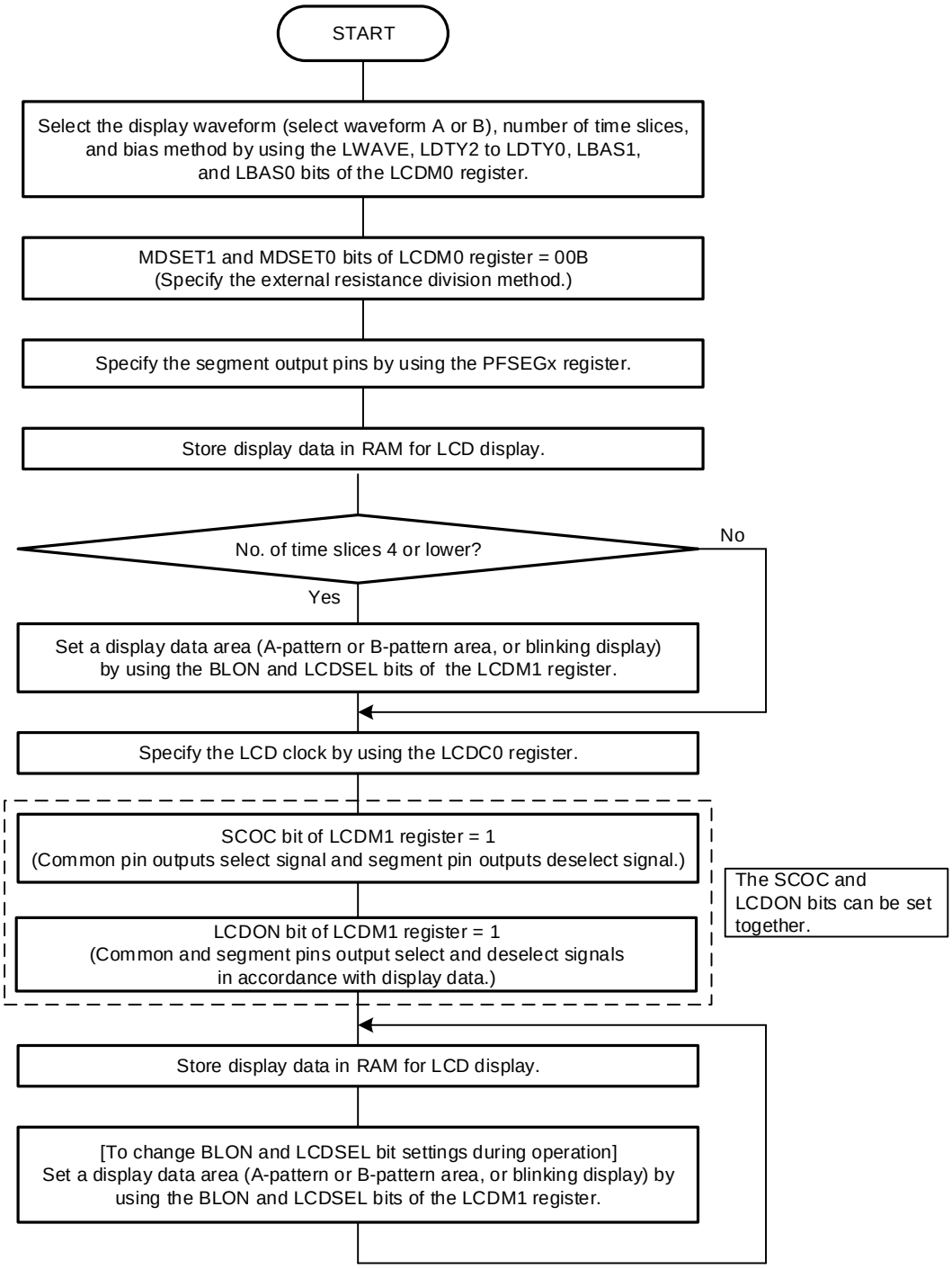

(2) Internal voltage boosting method

Figure 16-18. Internal Voltage Boosting Method Setting Procedure

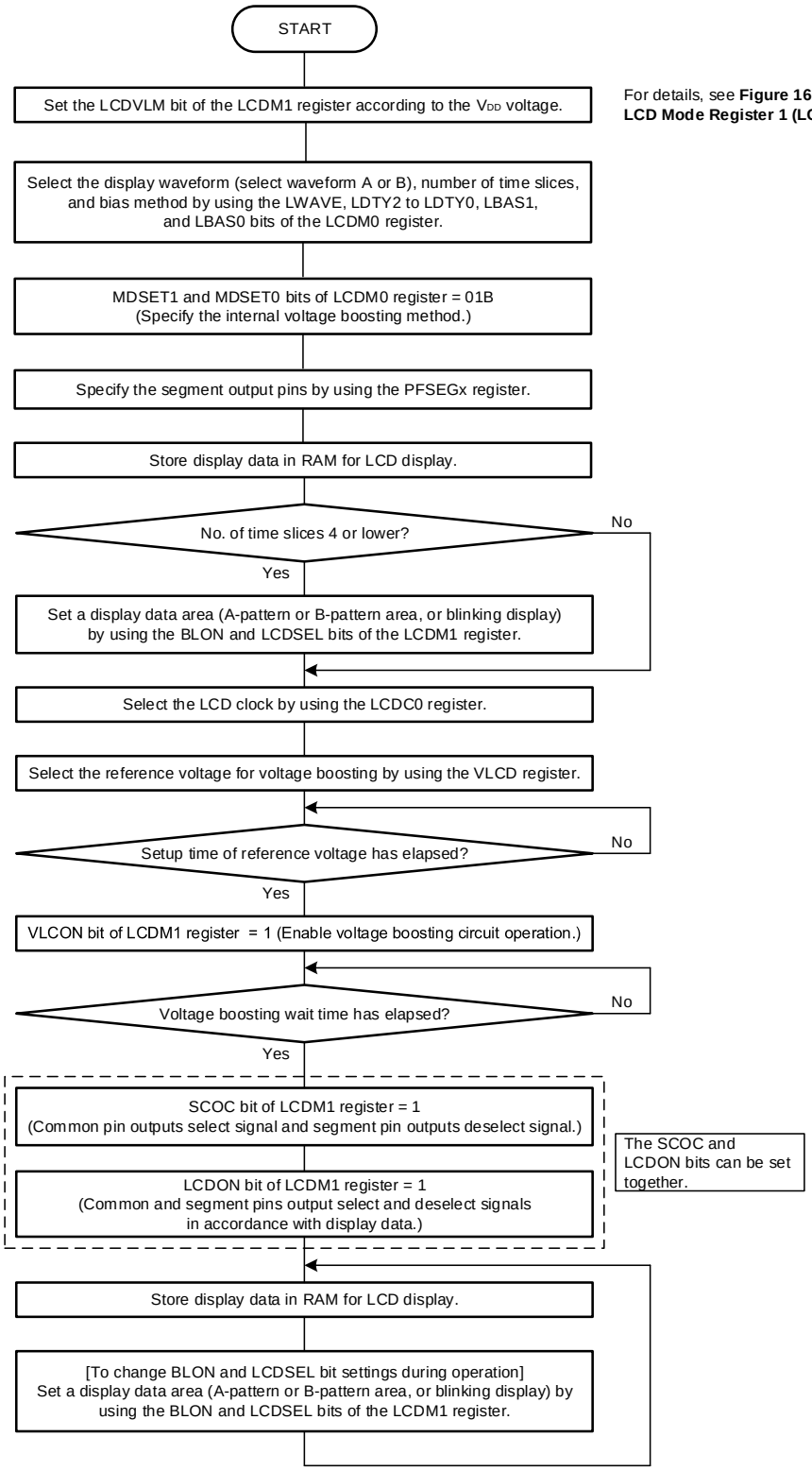

Cautions 1. Wait until the setup time has elapsed even if not changing the setting of the VLCD register.

2. For the specifications of the reference voltage setup time and voltage boosting wait time, see CHAPTER 32 ELECTRICAL SPECIFICATIONS (T_A = –40 to +85°C) and CHAPTER 33 ELECTRICAL SPECIFICATIONS (T_A = –40 to +105°C).

(3) Capacitor split method

Figure 16-19. Capacitor Split Method Setting Procedure

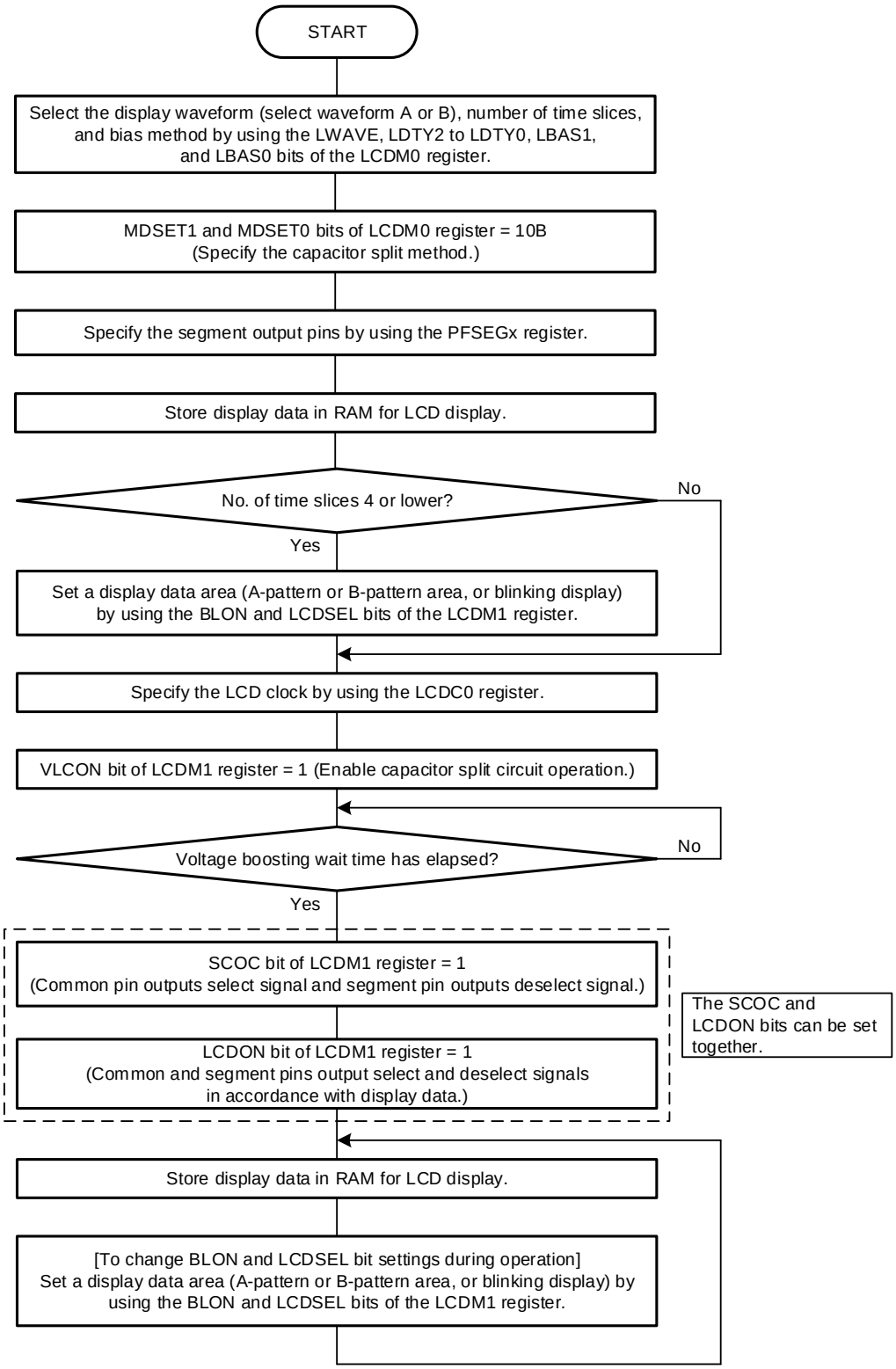

Caution For the specifications of the voltage boosting wait time, see CHAPTER 32 ELECTRICAL SPECIFICATIONS (T_A = –40 to +85°C) and CHAPTER 33 ELECTRICAL SPECIFICATIONS (T_A = –40 to +105°C).

16.7 Operation Stop Procedure

To stop the operation of the LCD while it is displaying waveforms, follow the steps shown in the flowchart below.
The LCD stops operating when the LCDON bit of LCDM1 register and SCOC bit of the LCDM1 register are set to “0”.

Figure 16-20. Operation Stop Procedure

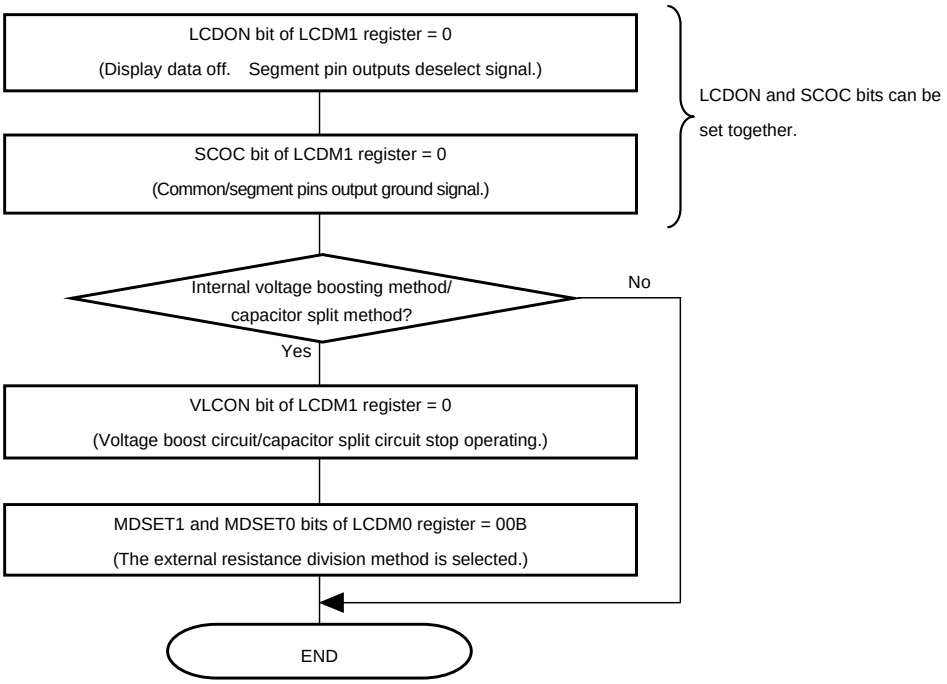

Caution Stopping the voltage boost/capacitor split circuits is prohibited while the display is on (SCOC and LCDON bits of LCDM1 register = 11B). Otherwise, the operation will not be guaranteed. Be sure to turn off display (SCOC and LCDON bits of LCDM1 register = 10B) before stopping the voltage boost/capacitor split circuits (VLCON bit of LCDM1 register = 0).

16.8 Supplying LCD Drive Voltages V_{L1}, V_{L2}, V_{L3}, and V_{L4}

16.8.1 External resistance division method

Figure 16-21 shows examples of LCD drive voltage connection, corresponding to each bias method.

Figure 16-21. Examples of LCD Drive Power Connections (External Resistance Division Method) (1/2)

(a) Static display mode

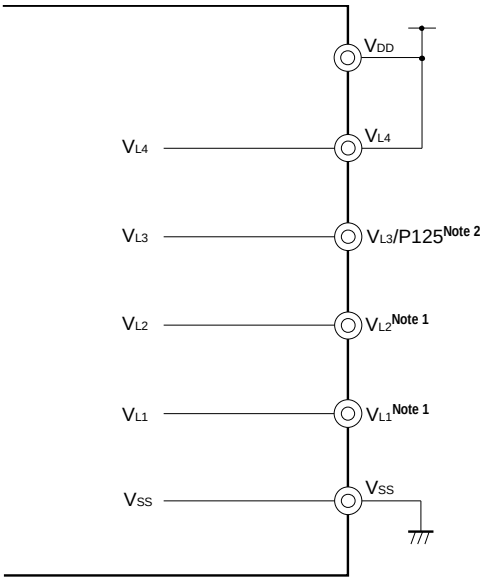

$V_{L4} = V_{DD}$

(b) 1/2 bias method

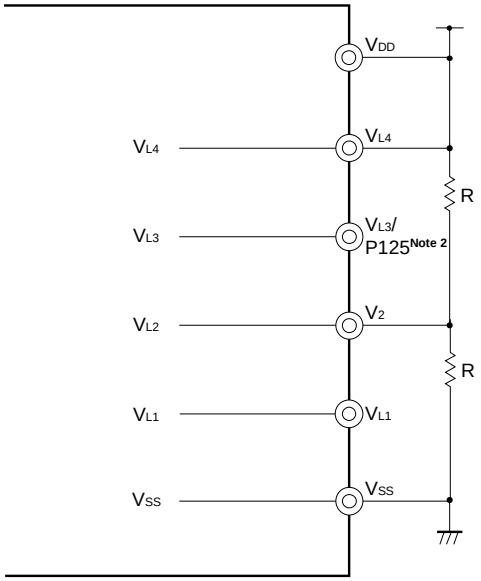

$V_{L4} = V_{DD}$

Notes 1. Connect V_{L1} and V_{L2} to GND or leave open.

2. V_{L3} can be used as port (P125).

Figure 16-21. Examples of LCD Drive Power Connections (External Resistance Division Method) (2/2)

(c) 1/3 bias method

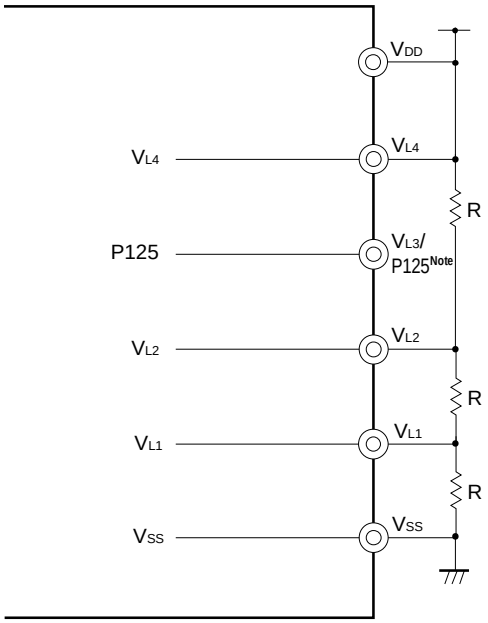

$V_{L4} = V_{DD}$

(d) 1/4 bias method

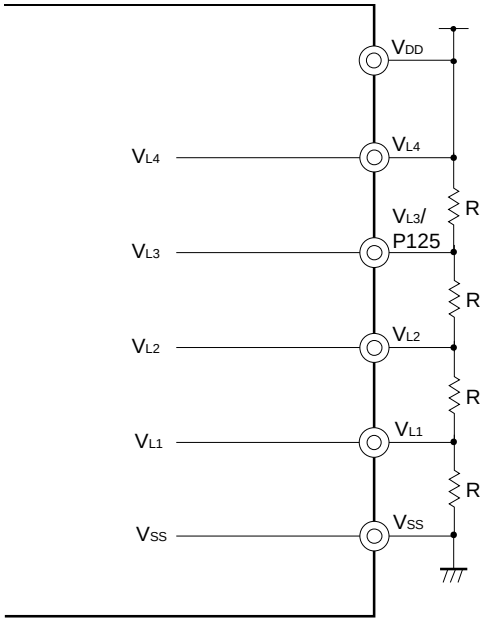

$V_{L4} = V_{DD}$

Note V_{L3} can be used as port (P125).

Caution The reference resistance "R" value for external resistance division is 10 kΩ to 1 MΩ. In addition, to stabilize the potential of the V_{L1} to V_{L4} pins, connect a capacitor between each of pins V_{L1} to V_{L4} and the GND pin as needed. The reference capacitance is about 0.22 μF but it depends on the LCD panel used, the number of segment pins, the number of common pins, the frame frequency, and the operating environment. Thoroughly evaluate these values in accordance with your system and adjust and determine the capacitance.

16.8.2 Internal voltage boosting method

The RL78/L13 contains an internal voltage boost circuit for generating LCD drive power supplies. The internal voltage boost circuit and external capacitors (0.47 μF±30%) are used to generate an LCD drive voltage. Only 1/3 bias mode or 1/4 bias mode can be set for the internal voltage boosting method.

The LCD drive voltage of the internal voltage boosting method can supply a constant voltage, regardless of changes in V_{DD}, because it is a power supply separate from the main unit.

In addition, a contrast can be adjusted by using the LCD boost level control register (VLCD).

Table 16-11. LCD Drive Voltages (Internal Voltage Boosting Method)

Bias Method / LCD Drive Voltage Pin	1/3 Bias Method	1/4 Bias Method
V_{L4}	3 × V_{L1}	4 × V_{L1}
V_{L3}	–	3 × V_{L1}
V_{L2}	2 × V_{L1}	2 × V_{L1}
V_{L1}	LCD reference voltage	LCD reference voltage

Figure 16-22. Examples of LCD Drive Power Connections (Internal Voltage Boosting Method)

(a) 1/3 bias method

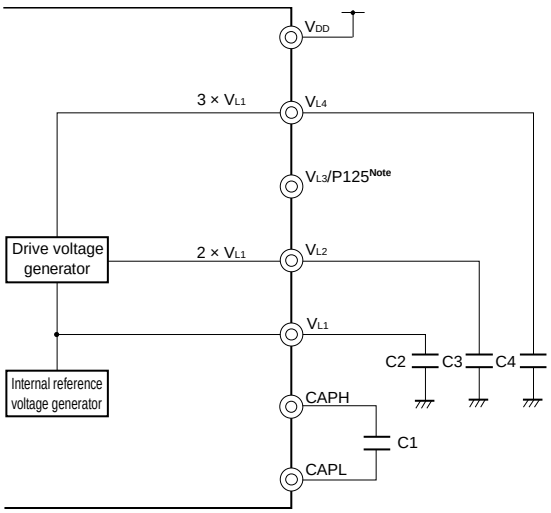

(b) 1/4 bias method

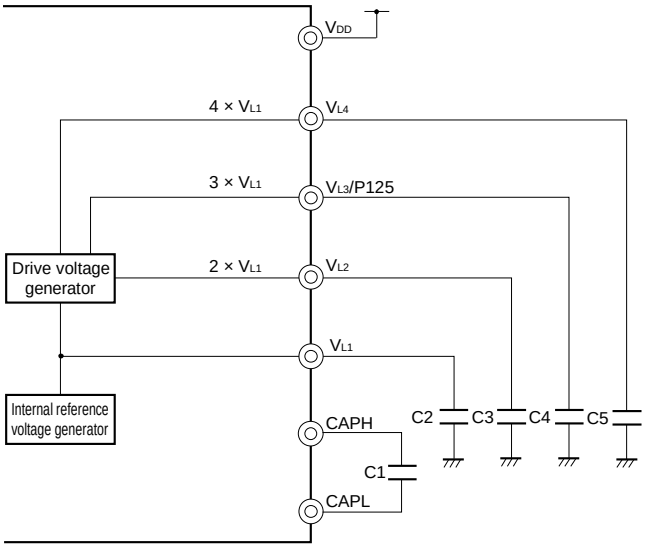

Note V_{L3} can be used as port (P125).

Remark Use a capacitor with as little leakage as possible.
In addition, make C1 a nonpolar capacitor.

16.8.3 Capacitor split method

The RL78/L13 contains an internal voltage reduction circuit for generating LCD drive power supplies. The internal voltage reduction circuit and external capacitors (0.47 μF±30%) are used to generate an LCD drive voltage. Only 1/3 bias mode can be set for the capacitor split method.

Different from the external resistance division method, there is always no current flowing with the capacitor split method, so current consumption can be reduced.

Table 16-12. LCD Drive Voltages (Capacitor Split Method)

Bias Method / LCD Drive Voltage Pin	1/3 Bias Method
V_{L4}	V_{DD}
V_{L3}	–
V_{L2}	2/3 × V_{L4}
V_{L1}	1/3 × V_{L4}

Figure 16-23. Examples of LCD Drive Power Connections (Capacitor Split Method)

• 1/3 bias method

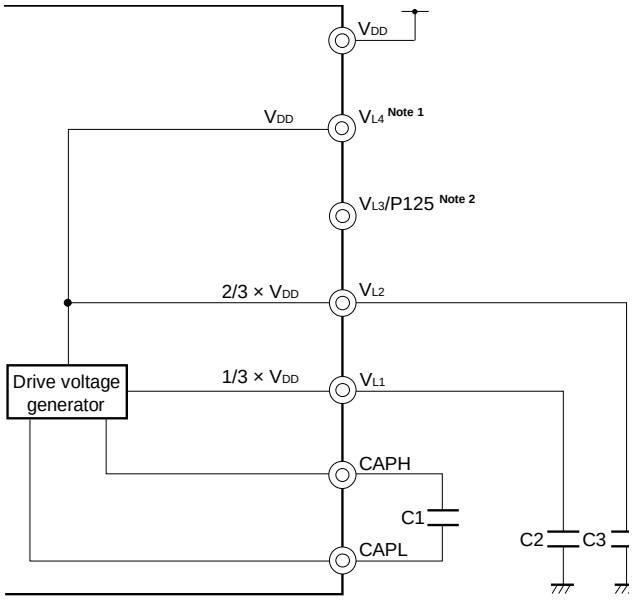

Notes 1. When switching to internal voltage boosting method, connect capacitor C4 as shown in **Figure 16-22 Examples of LCD Drive Power Connections (Internal Voltage Boosting Method)**.

2. V_{L3} can be used as port (P125).

Remark Use a capacitor with as little leakage as possible.
In addition, make C1 a nonpolar capacitor.

16.9 Common and Segment Signals

Each pixel of the LCD panel turns on when the potential difference between the corresponding common and segment signals becomes higher than a specific voltage (LCD drive voltage, V_{LCD}). The pixels turn off when the potential difference becomes lower than V_{LCD}.

Applying DC voltage to the common and segment signals of an LCD panel causes deterioration. To avoid this problem, this LCD panel is driven by AC voltage.

(1) Common signals

Each common signal is selected sequentially according to a specified number of time slices at the timing listed in Table 16-13. In the static display mode, the same signal is output to COM0 to COM3.

In the two-time-slice mode, leave the COM2 and COM3 pins open. In the three-time-slice mode, leave the COM3 pin open.

Use the COM4 to COM7 pins other than in the eight-time-slice mode as open or segment pins.

Table 16-13. COM Signals

COM Signal / Number of Time Slices	COM0	COM1	COM2	COM3	COM4	COM5	COM6	COM7
Static display mode					**Note**	**Note**	**Note**	**Note**
Two-time-slice mode			Open	Open	**Note**	**Note**	**Note**	**Note**
Three-time-slice mode				Open	**Note**	**Note**	**Note**	**Note**
Four-time-slice mode					**Note**	**Note**	**Note**	**Note**
Eight-time-slice mode								

Note Use the pins as open or segment pins.

(2) Segment signals

The segment signals correspond to the LCD display data register (see **16.4 LCD Display Data Registers**).

When the number of time slices is eight, bits 0 to 7 of each display data register are read in synchronization with COM0 to COM7, respectively. If a bit is 1, it is converted to the select voltage, and if it is 0, it is converted to the deselect voltage. The conversion results are output to the segment pins (SEG4 to SEG50).

When the number of time slices is number other than eight, bits 0 to 3 of each byte in A-pattern area are read in synchronization with COM0 to COM3, and bits 4 to 7 of each byte in B-pattern area are read in synchronization with COM0 to COM3, respectively. If a bit is 1, it is converted to the select voltage, and if it is 0, it is converted to the deselect voltage. The conversion results are output to the segment pins (SEG0 to SEG50).

Check, with the information given above, what combination of front-surface electrodes (corresponding to the segment signals) and rear-surface electrodes (corresponding to the common signals) forms display patterns in the LCD display data register, and write the bit data that corresponds to the desired display pattern on a one-to-one basis.

Remark The mounted segment output pins vary depending on the product.

- 64-pin products: SEG0 to SEG3, SEG6 to SEG8, SEG11, SEG12, SEG16 to SEG23, SEG29, SEG33 to SEG50
- 80-pin products: SEG0 to SEG50

(3) Output waveforms of common and segment signals

The voltages listed in Table 16-14 are output as common and segment signals.

When both common and segment signals are at the select voltage, a display on-voltage of $\pm V_{LCD}$ is obtained. The other combinations of the signals correspond to the display off-voltage.

Table 16-14. LCD Drive Voltage

(a) Static display mode

Common Signal \ Segment Signal	Select Signal Level	Deselect Signal Level
	V_{SS}/V_{L4}	V_{L4}/V_{SS}
V_{L4}/V_{SS}	$-V_{LCD}/+V_{LCD}$	0 V/0 V

(b) 1/2 bias method

Common Signal \ Segment Signal		Select Signal Level	Deselect Signal Level
		V_{SS}/V_{L4}	V_{L4}/V_{SS}
Select signal level	V_{L4}/V_{SS}	$-V_{LCD}/+V_{LCD}$	0 V/0 V
Deselect signal level	V_{L2}	$-\frac{1}{2}V_{LCD}/+\frac{1}{2}V_{LCD}$	$+\frac{1}{2}V_{LCD}/-\frac{1}{2}V_{LCD}$

(c) 1/3 bias method (waveform A or B)

Common Signal \ Segment Signal		Select Signal Level	Deselect Signal Level
		V_{SS}/V_{L4}	V_{L2}/V_{L1}
Select signal level	V_{L4}/V_{SS}	$-V_{LCD}/+V_{LCD}$	$-\frac{1}{3}V_{LCD}/+\frac{1}{3}V_{LCD}$
Deselect signal level	V_{L1}/V_{L2}	$-\frac{1}{3}V_{LCD}/+\frac{1}{3}V_{LCD}$	$+\frac{1}{3}V_{LCD}/-\frac{1}{3}V_{LCD}$

(d) 1/4 bias method (waveform A or B)

Common Signal \ Segment Signal		Select Signal Level	Deselect Signal Level
		V_{SS}/V_{L4}	V_{L2}
Select signal level	V_{L4}/V_{SS}	$-V_{LCD}/+V_{LCD}$	$-\frac{1}{2}V_{LCD}/+\frac{1}{2}V_{LCD}$
Deselect signal level	V_{L1}/V_{L3}	$-\frac{1}{4}V_{LCD}/+\frac{1}{4}V_{LCD}$	$+\frac{1}{4}V_{LCD}/-\frac{1}{4}V_{LCD}$

Figure 16-24 shows the common signal waveforms, and Figure 16-25 shows the voltages and phases of the common and segment signals.

Figure 16-24. Common Signal Waveforms (1/2)

(a) Static display mode

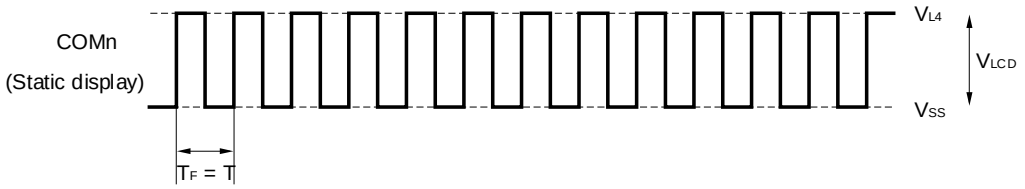

T: One LCD clock period TF: Frame frequency

(b) 1/2 bias method

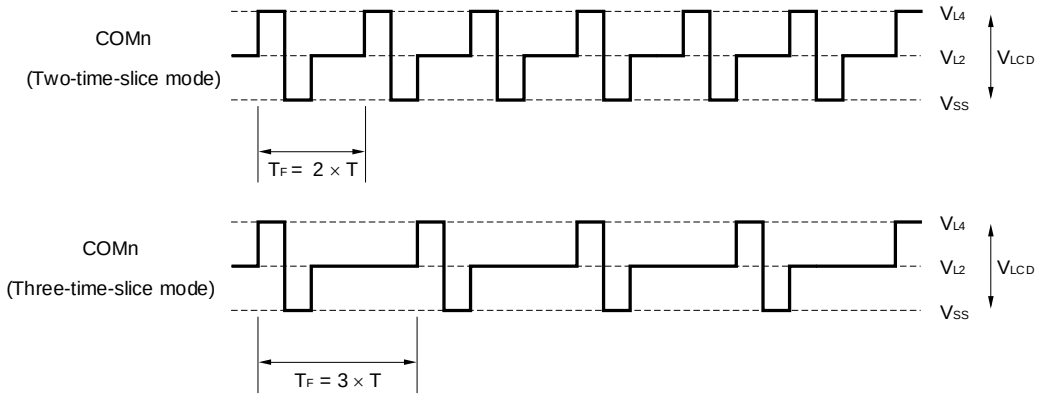

T: One LCD clock period TF: Frame frequency

Figure 16-24. Common Signal Waveforms (2/2)

(c) 1/3 bias method

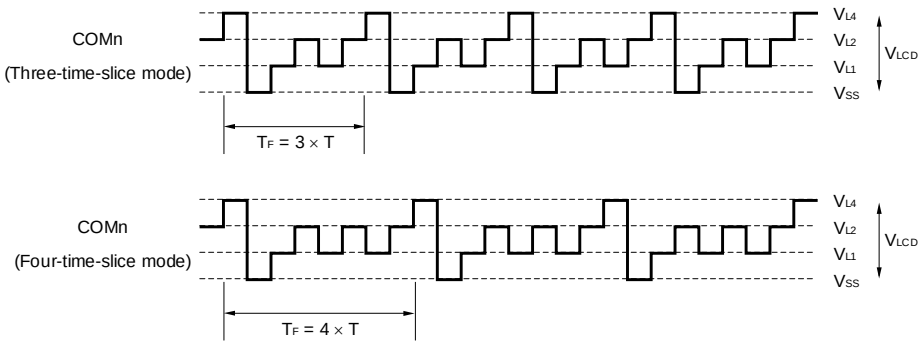

T: One LCD clock period T_F: Frame frequency

< Example of calculation of LCD frame frequency (When four-time slot mode is used) >

LCD clock: $32768/2^7$ = 256 Hz (When setting to LCDC0 = 06H)

LCD frame frequency: 64 Hz

(d) 1/4 bias method

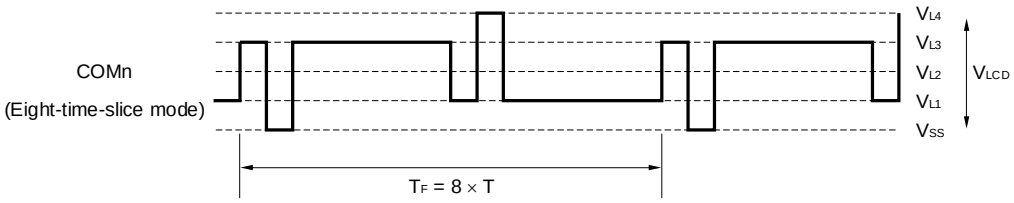

T: One LCD clock period T_F: Frame frequency

< Example of calculation of LCD frame frequency (When eight-time slot mode is used) >

LCD clock: $32768/2^7$ = 256 Hz (When setting to LCDC0 = 06H)

LCD frame frequency: 32 Hz

Figure 16-25. Voltages and Phases of Common and Segment Signals (1/3)

(a) Static display mode (waveform A)

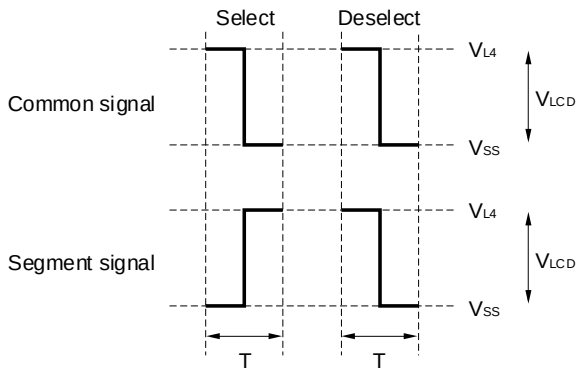

T: One LCD clock period

(b) 1/2 bias method (waveform A)

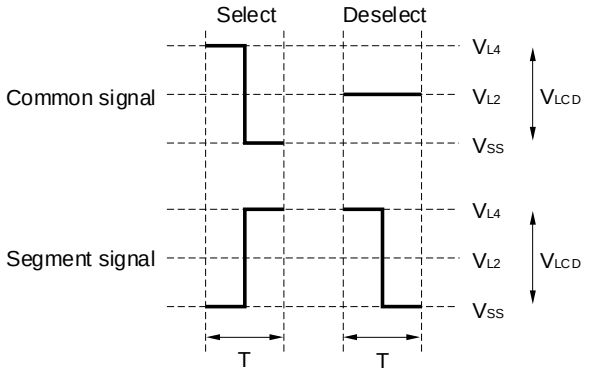

T: One LCD clock period

Figure 16-25. Voltages and Phases of Common and Segment Signals (2/3)

(c) 1/3 bias method (waveform A)

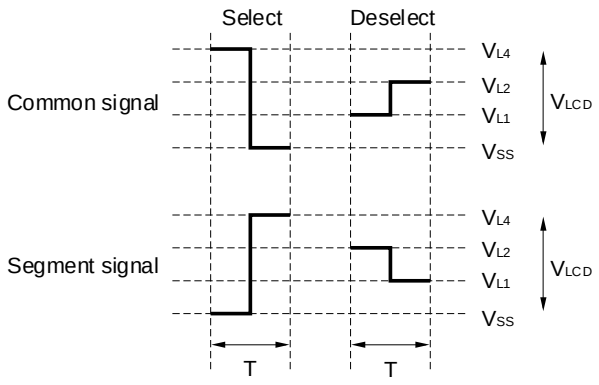

T: One LCD clock period

(d) 1/3 bias method (waveform B)

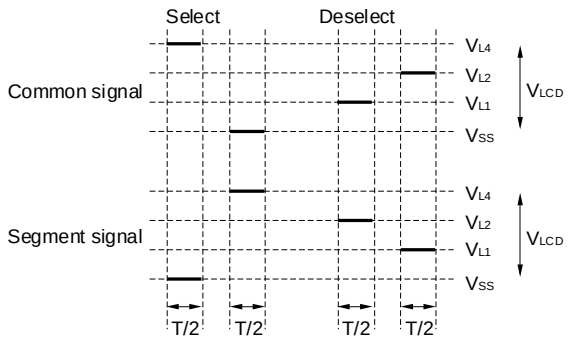

T: One LCD clock period

Figure 16-25. Voltages and Phases of Common and Segment Signals (3/3)

(e) 1/4 bias method (waveform A)

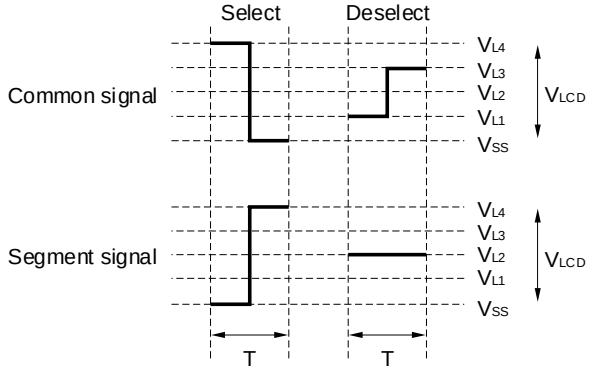

T: One LCD clock period

(f) 1/4 bias method (waveform B)

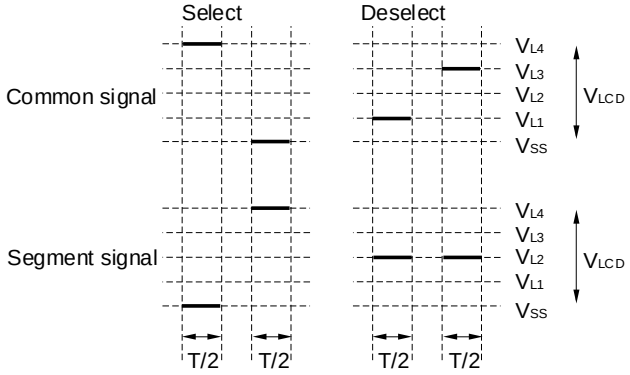

T: One LCD clock period

16.10 Display Modes

16.10.1 Static display example

Figure 16-27 shows how the three-digit LCD panel having the display pattern shown in Figure 16-26 is connected to the segment signals (SEG0 to SEG23) and the common signal (COM0). This example displays data “12.3” in the LCD panel. The contents of the display data register (F0400H to F0417H) correspond to this display.

The following description focuses on numeral “2.” (2.) displayed in the second digit. To display “2.” in the LCD panel, it is necessary to apply the select or deselect voltage to the SEG8 to SEG15 pins according to Table 16-15 at the timing of the common signal COM0; see Figure 16-26 for the relationship between the segment signals and LCD segments.

Table 16-15. Select and Deselect Voltages (COM0)

Segment / Common	SEG8	SEG9	SEG10	SEG11	SEG12	SEG13	SEG14	SEG15
COM0	Select	Deselect	Select	Select	Deselect	Select	Select	Select

According to the above, it is determined that the bit-0 pattern of the display data register locations (F0408H to F040FH) must be 10110111.

Figure 16-28 shows the LCD drive waveforms of SEG11 and SEG12, and COM0. When the select voltage is applied to SEG11 at the timing of COM0, an alternate rectangle waveform, $+V_{LCD}/-V_{LCD}$, is generated to turn on the corresponding LCD segment.

COM1 to COM3 are supplied with the same waveform as for COM0. So, COM0 to COM3 may be connected together to increase the driving capacity.

Figure 16-26. Static LCD Display Pattern and Electrode Connections

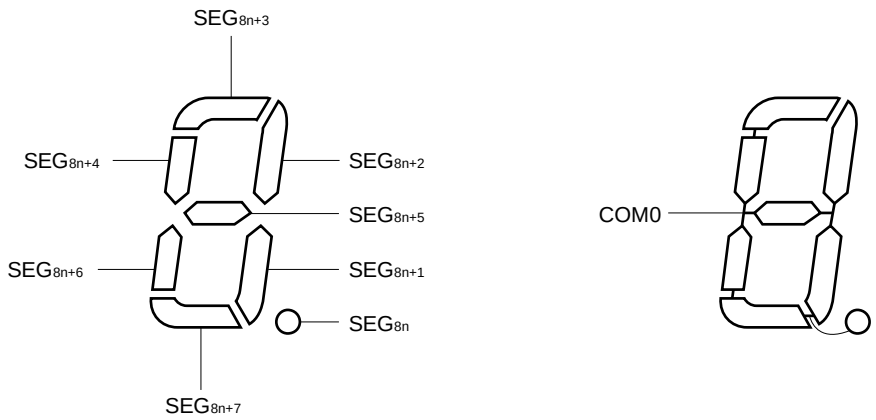

Remark 80-pin products: n = 0 to 5

Figure 16-27. Example of Connecting Static LCD Panel

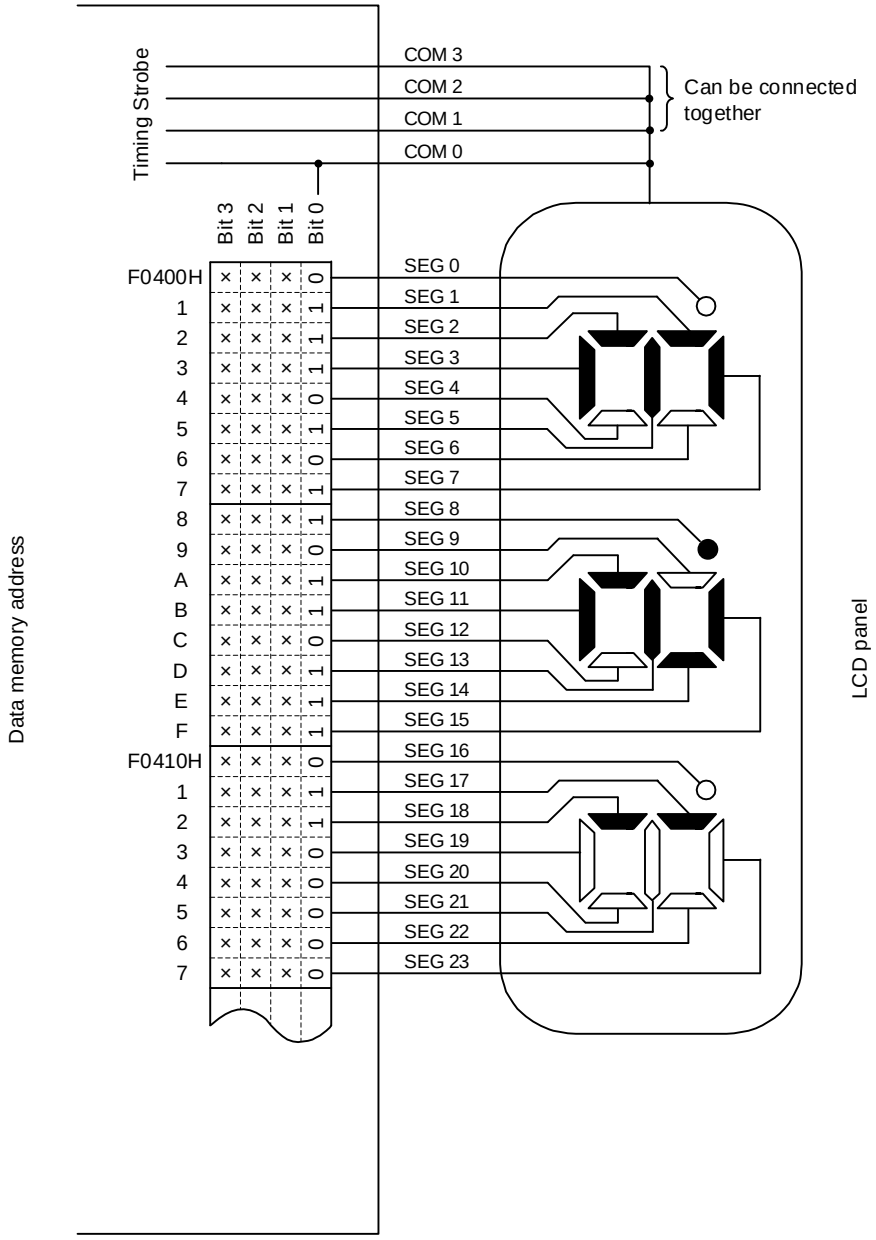

Figure 16-28. Static LCD Drive Waveform Examples for SEG11, SEG12, and COM0

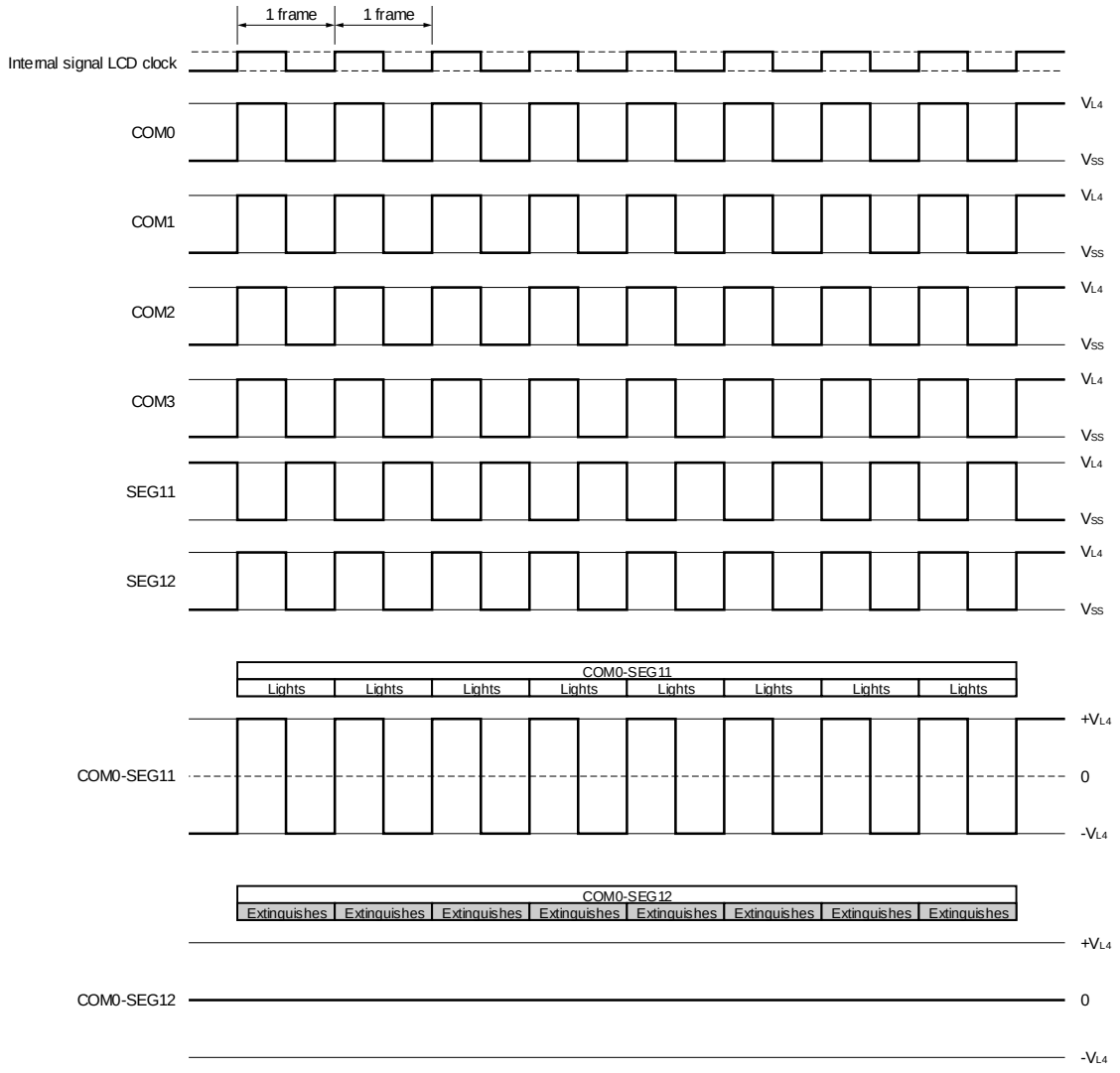

16.10.2 Two-time-slice display example

Figure 16-30 shows how the 6-digit LCD panel having the display pattern shown in Figure 16-29 is connected to the segment signals (SEG0 to SEG23) and the common signals (COM0 and COM1). This example displays data “12345.6” in the LCD panel. The contents of the display data register (F0400H to F0417H) correspond to this display.

The following description focuses on numeral “3” (3) displayed in the fourth digit. To display “3” in the LCD panel, it is necessary to apply the select or deselect voltage to the SEG12 to SEG15 pins according to Table 16-16 at the timing of the common signals COM0 and COM1; see Figure 16-29 for the relationship between the segment signals and LCD segments.

Table 16-16. Select and Deselect Voltages (COM0 and COM1)

Common \ Segment	SEG12	SEG13	SEG14	SEG15
COM0	Select	Select	Deselect	Deselect
COM1	Deselect	Select	Select	Select

According to the above, it is determined that the display data register location (F040FH) that corresponds to SEG15 must contain xx10.

Figure 16-31 shows examples of LCD drive waveforms between the SEG15 signal and each common signal. When the select voltage is applied to SEG15 at the timing of COM1, an alternate rectangle waveform, $+V_{LCD}/-V_{LCD}$, is generated to turn on the corresponding LCD segment.

Figure 16-29. Two-Time-Slice LCD Display Pattern and Electrode Connections

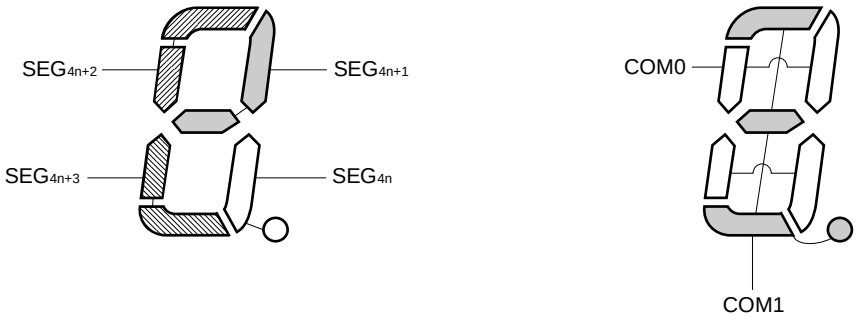

Remark 80-pin products: n = 0 to 12

Figure 16-30. Example of Connecting Two-Time-Slice LCD Panel

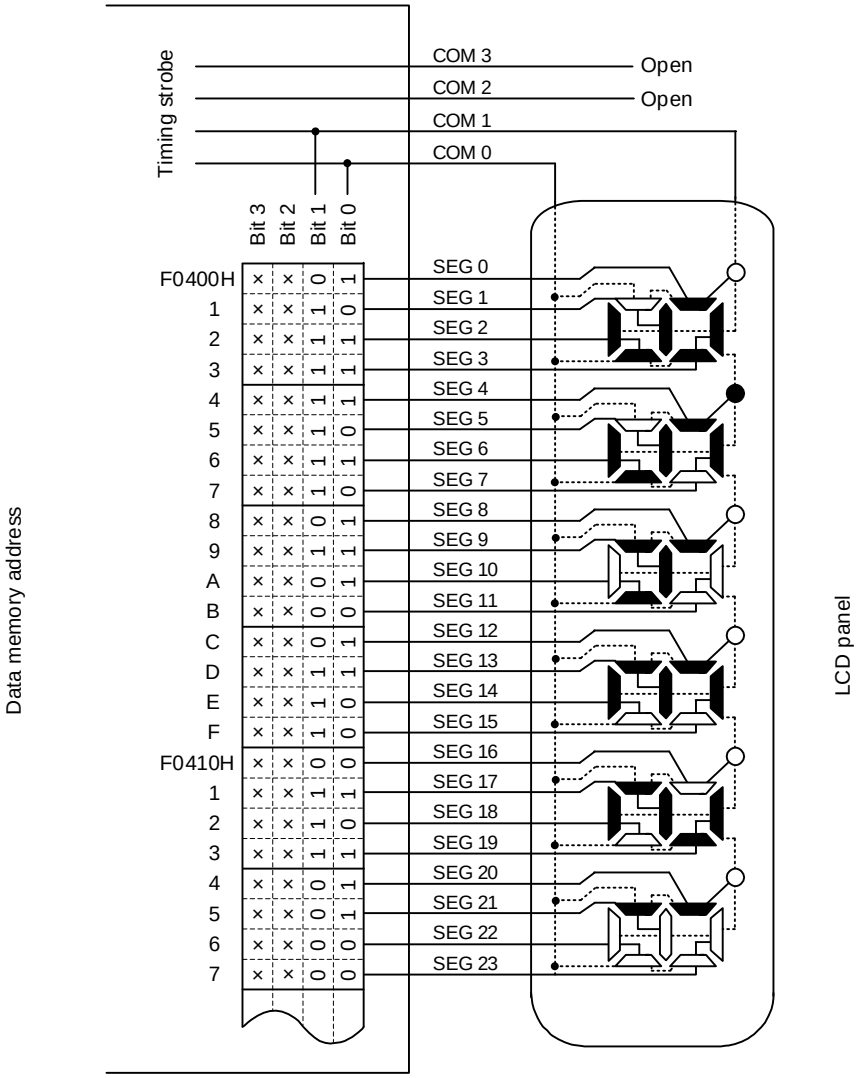

×: Can always be used to store any data because the two-time-slice mode is being used.

Figure 16-31. Two-Time-Slice LCD Drive Waveform Examples Between SEG15 and Each Common Signals (1/2 Bias Method)

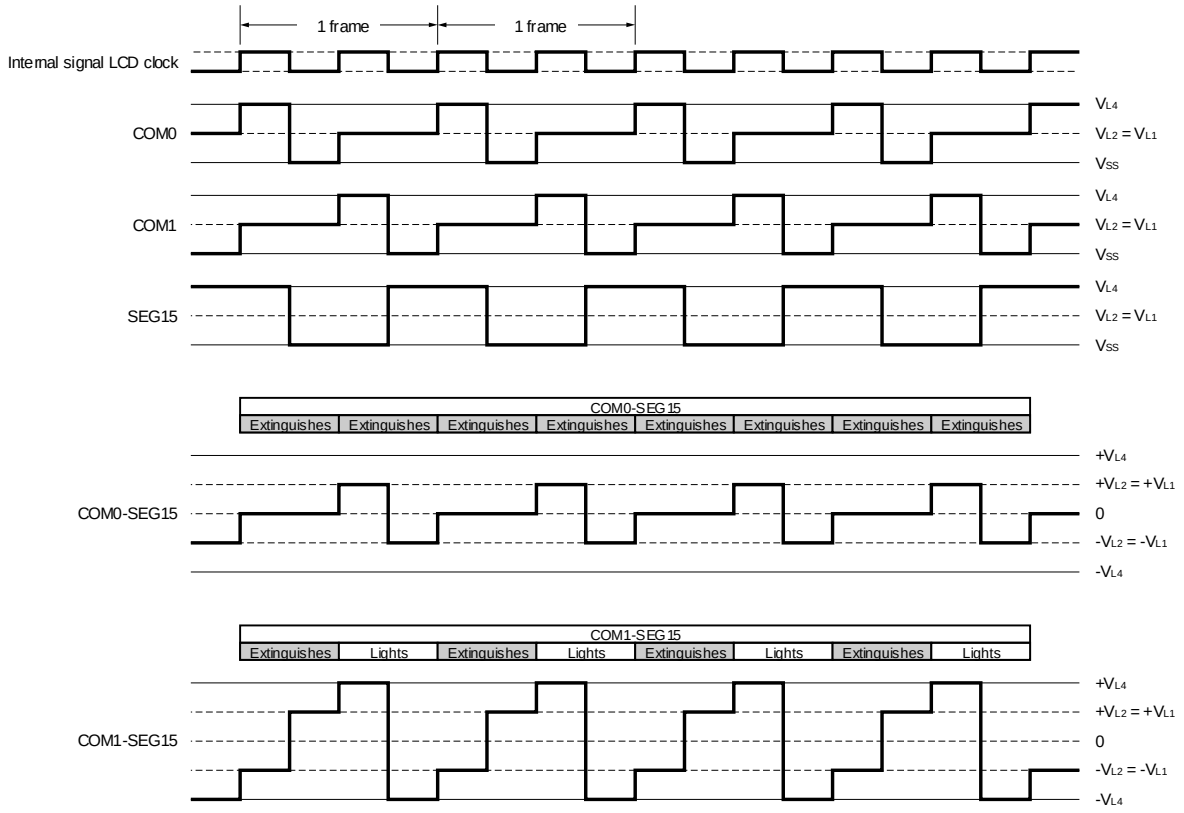

16.10.3 Three-time-slice display example

Figure 16-33 shows how the 8-digit LCD panel having the display pattern shown in Figure 16-32 is connected to the segment signals (SEG0 to SEG23) and the common signals (COM0 to COM2). This example displays data “123456.78” in the LCD panel. The contents of the display data register (addresses F0400H to F0417H) correspond to this display.

The following description focuses on numeral “6.” (6.) displayed in the third digit. To display “6.” in the LCD panel, it is necessary to apply the select or deselect voltage to the SEG6 to SEG8 pins according to Table 16-17 at the timing of the common signals COM0 to COM2; see Figure 16-32 for the relationship between the segment signals and LCD segments.

Table 16-17. Select and Deselect Voltages (COM0 to COM2)

Common \ Segment	SEG6	SEG7	SEG8
COM0	Deselect	Select	Select
COM1	Select	Select	Select
COM2	Select	Select	–

According to the above, it is determined that the display data register location (F0406H) that corresponds to SEG6 must contain x110.

Figures 16-34 and 16-35 show examples of LCD drive waveforms between the SEG6 signal and each common signal in the 1/2 and 1/3 bias methods, respectively. When the select voltage is applied to SEG6 at the timing of COM1 or COM2, an alternate rectangle waveform, $+V_{LCD}/-V_{LCD}$, is generated to turn on the corresponding LCD segment.

Figure 16-32. Three-Time-Slice LCD Display Pattern and Electrode Connections

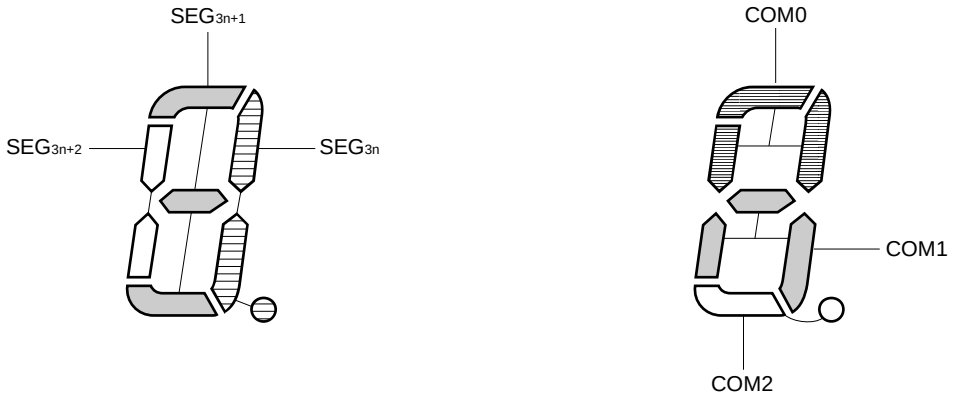

Remark 80-pin products: n = 0 to 16

Figure 16-33. Example of Connecting Three-Time-Slice LCD Panel

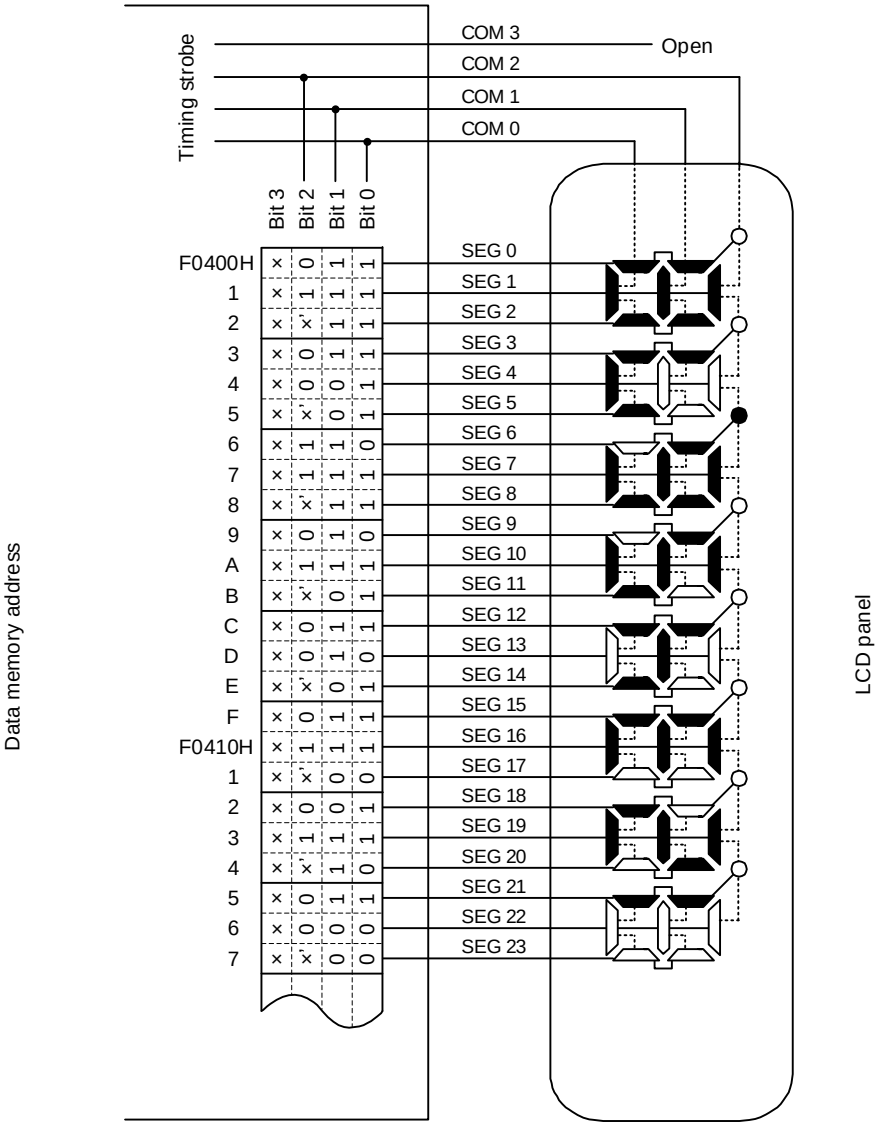

×': Can be used to store any data because there is no corresponding segment in the LCD panel.

×: Can always be used to store any data because the three-time-slice mode is being used.

Figure 16-34. Three-Time-Slice LCD Drive Waveform Examples Between SEG6 and Each Common Signals (1/2 Bias Method)

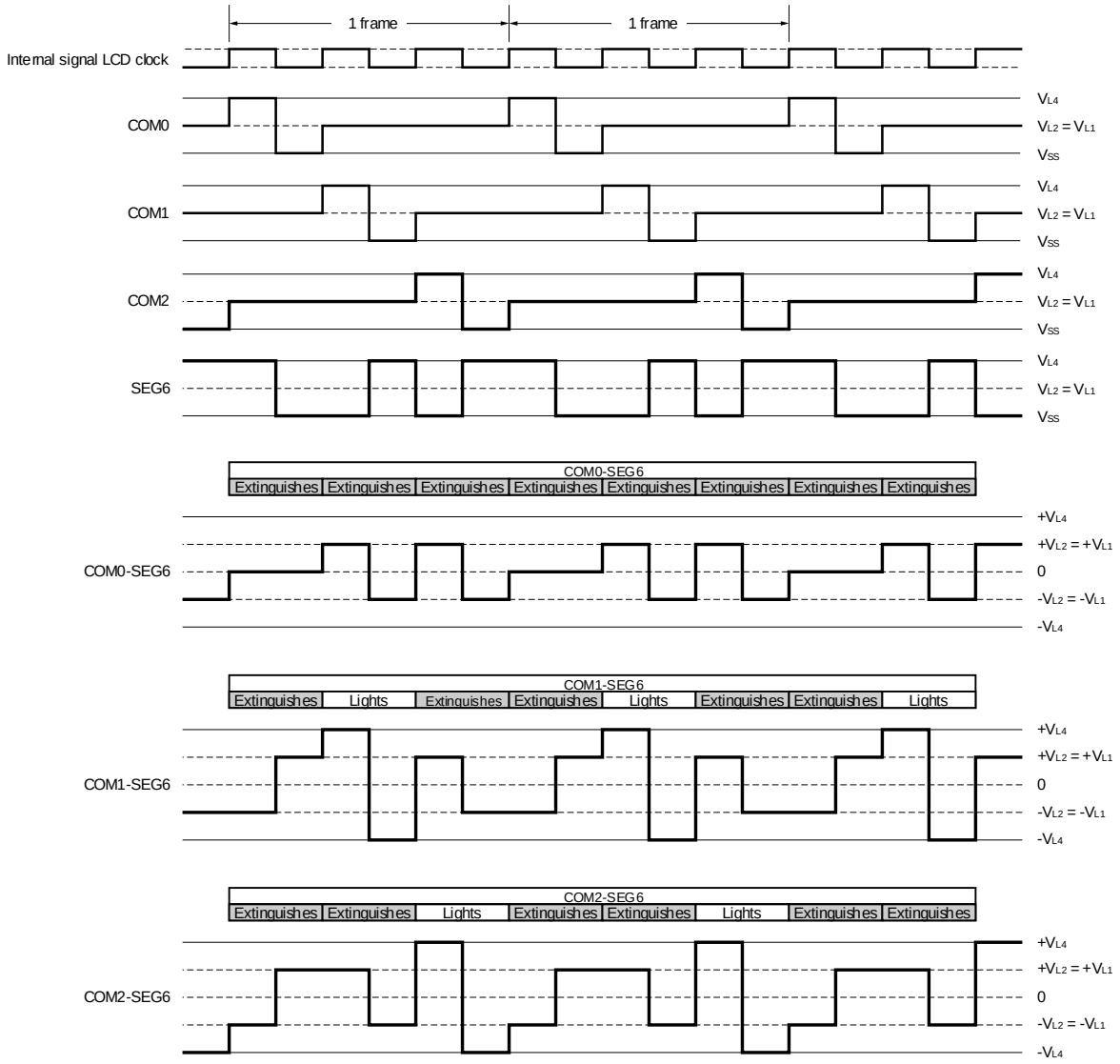

Figure 16-35. Three-Time-Slice LCD Drive Waveform Examples Between SEG6 and Each Common Signals (1/3 Bias Method)

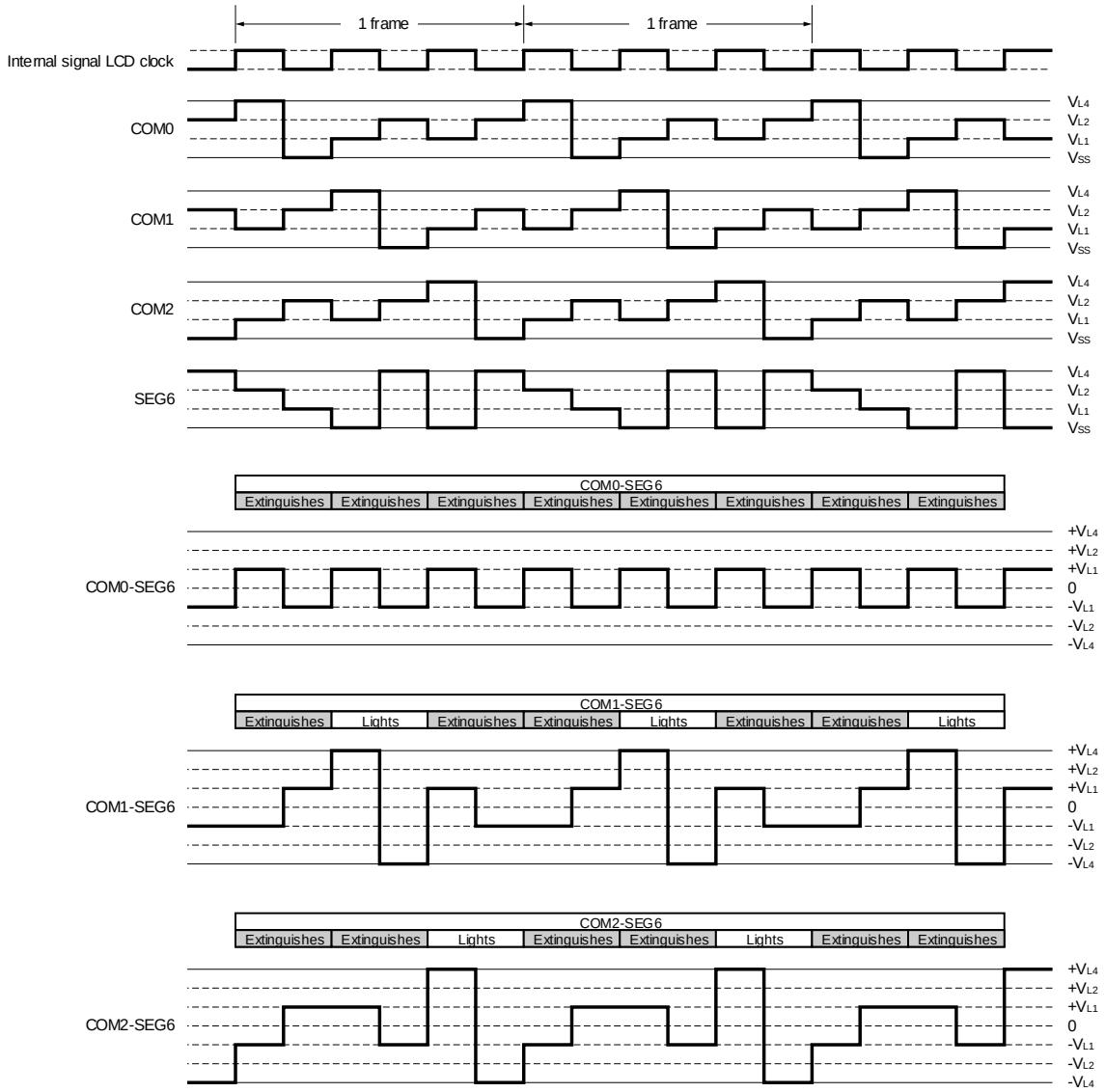

16.10.4 Four-time-slice display example

Figure 16-37 shows how the 12-digit LCD panel having the display pattern shown in Figure 16-36 is connected to the segment signals (SEG0 to SEG23) and the common signals (COM0 to COM3). This example displays data “123456.789012” in the LCD panel. The contents of the display data register (addresses F0400H to F0417H) correspond to this display.

The following description focuses on numeral “6.” (6.) displayed in the seventh digit. To display “6.” in the LCD panel, it is necessary to apply the select or deselect voltage to the SEG12 and SEG13 pins according to Figure 16-18 at the timing of the common signals COM0 to COM3; see Figure 16-36 for the relationship between the segment signals and LCD segments.

Table 16-18. Select and Deselect Voltages (COM0 to COM3)

Common \ Segment	SEG12	SEG13
COM0	Select	Select
COM1	Deselect	Select
COM2	Select	Select
COM3	Select	Select

According to the above, it is determined that the display data register location (F040CH) that corresponds to SEG12 must contain 1101.

Figure 16-38 shows examples of LCD drive waveforms between the SEG12 signal and each common signal. When the select voltage is applied to SEG12 at the timing of COM0, an alternate rectangle waveform, $+V_{LCD}/-V_{LCD}$, is generated to turn on the corresponding LCD segment.

Figure 16-36. Four-Time-Slice LCD Display Pattern and Electrode Connections

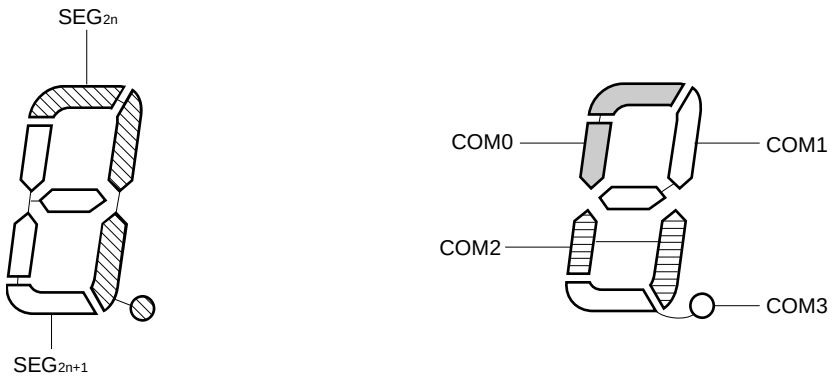

Remark 80-pin products: n = 0 to 25

Figure 16-37. Example of Connecting Four-Time-Slice LCD Panel

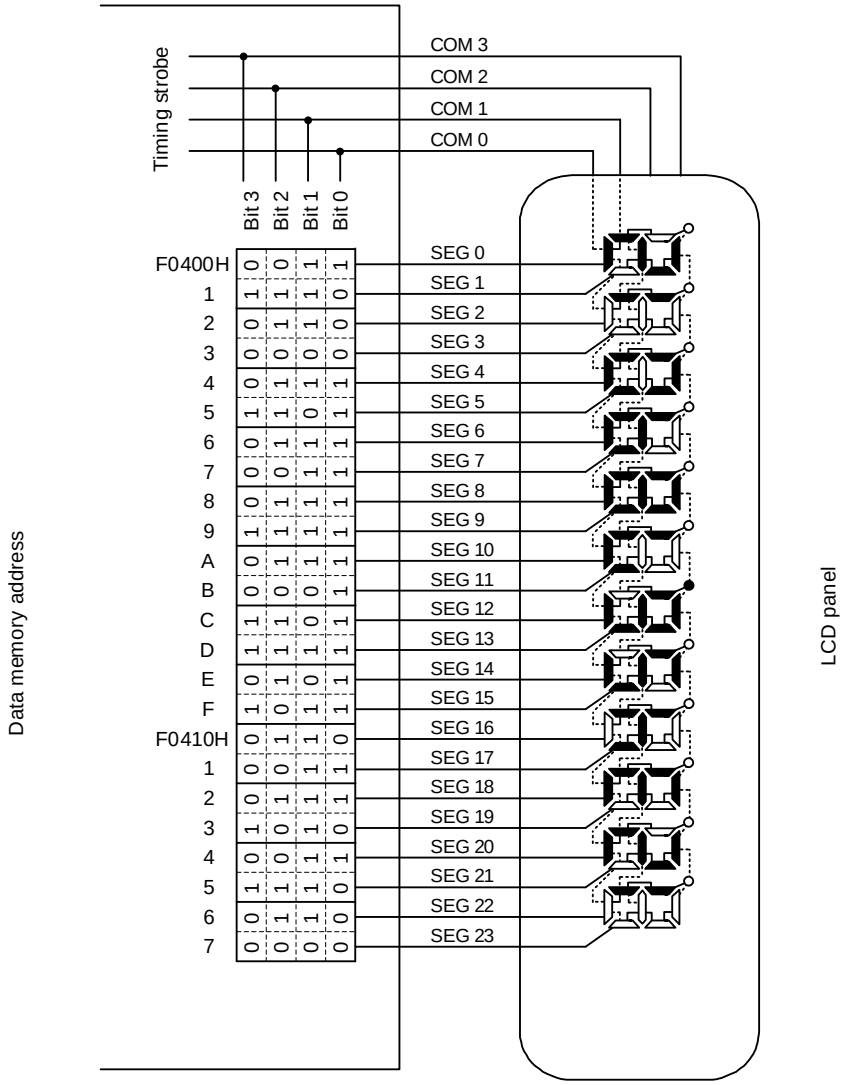

Figure 16-38. Four-Time-Slice LCD Drive Waveform Examples Between SEG12 and Each Common Signals (1/3 Bias Method) (1/2)

(a) Waveform A

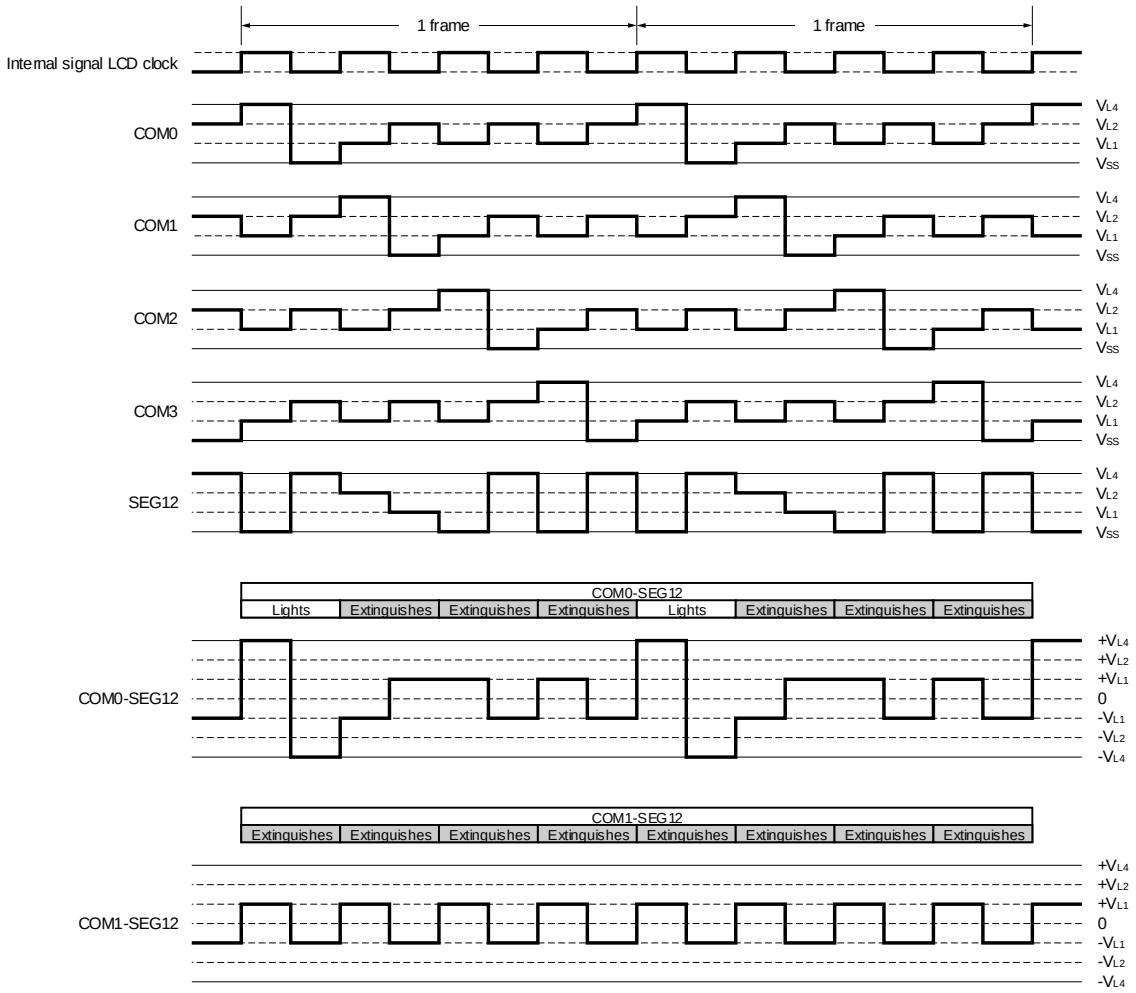

Figure 16-38. Four-Time-Slice LCD Drive Waveform Examples Between SEG12 and Each Common Signals (1/3 Bias Method) (2/2)

(b) Waveform B

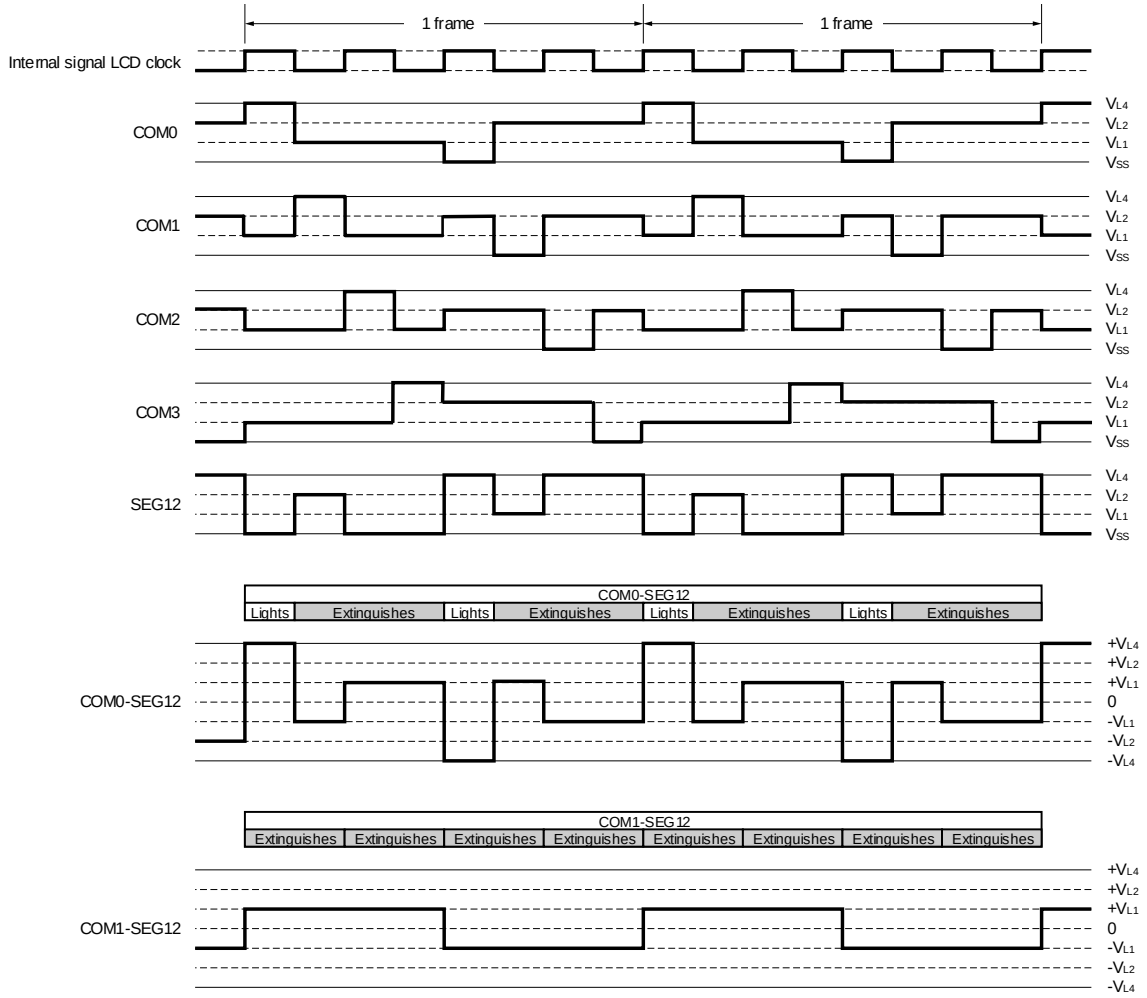

16.10.5 Eight-time-slice display example

Figure 16-40 shows how the 15x8 dot LCD panel having the display pattern shown in Figure 16-39 is connected to the segment signals (SEG4 to SEG18) and the common signals (COM0 to COM7). This example displays data “123” in the LCD panel. The contents of the display data register (addresses F0404H to F0412H) correspond to this display.

The following description focuses on numeral “3.” (∃) displayed in the first digit. To display “3.” in the LCD panel, it is necessary to apply the select or deselect voltage to the SEG4 to SEG8 pins according to Table 16-19 at the timing of the common signals COM0 to COM7; see Figure 16-39 for the relationship between the segment signals and LCD segments.

Table 16-19. Select and Deselect Voltages (COM0 to COM7)

Common \ Segment	SEG4	SEG5	SEG6	SEG7	SEG8
COM0	Select	Select	Select	Select	Select
COM1	Deselect	Select	Deselect	Deselect	Deselect
COM2	Deselect	Deselect	Select	Deselect	Deselect
COM3	Deselect	Select	Deselect	Deselect	Deselect
COM4	Select	Deselect	Deselect	Deselect	Deselect
COM5	Select	Deselect	Deselect	Deselect	Select
COM6	Deselect	Select	Select	Select	Deselect
COM7	Deselect	Deselect	Deselect	Deselect	Deselect

According to the above, it is determined that the display data register location (F0404H) that corresponds to SEG4 must contain 00110001.

Figure 16-41 shows examples of LCD drive waveforms between the SEG4 signal and each common signal. When the select voltage is applied to SEG4 at the timing of COM0, a waveform is generated to turn on the corresponding LCD segment.

Figure 16-39. Eight-Time-Slice LCD Display Pattern and Electrode Connections

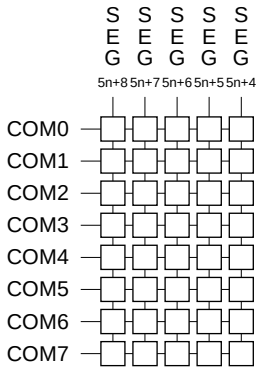

Remark 80-pin products: n = 0 to 8

Figure 16-40. Example of Connecting Eight-Time-Slice LCD Panel

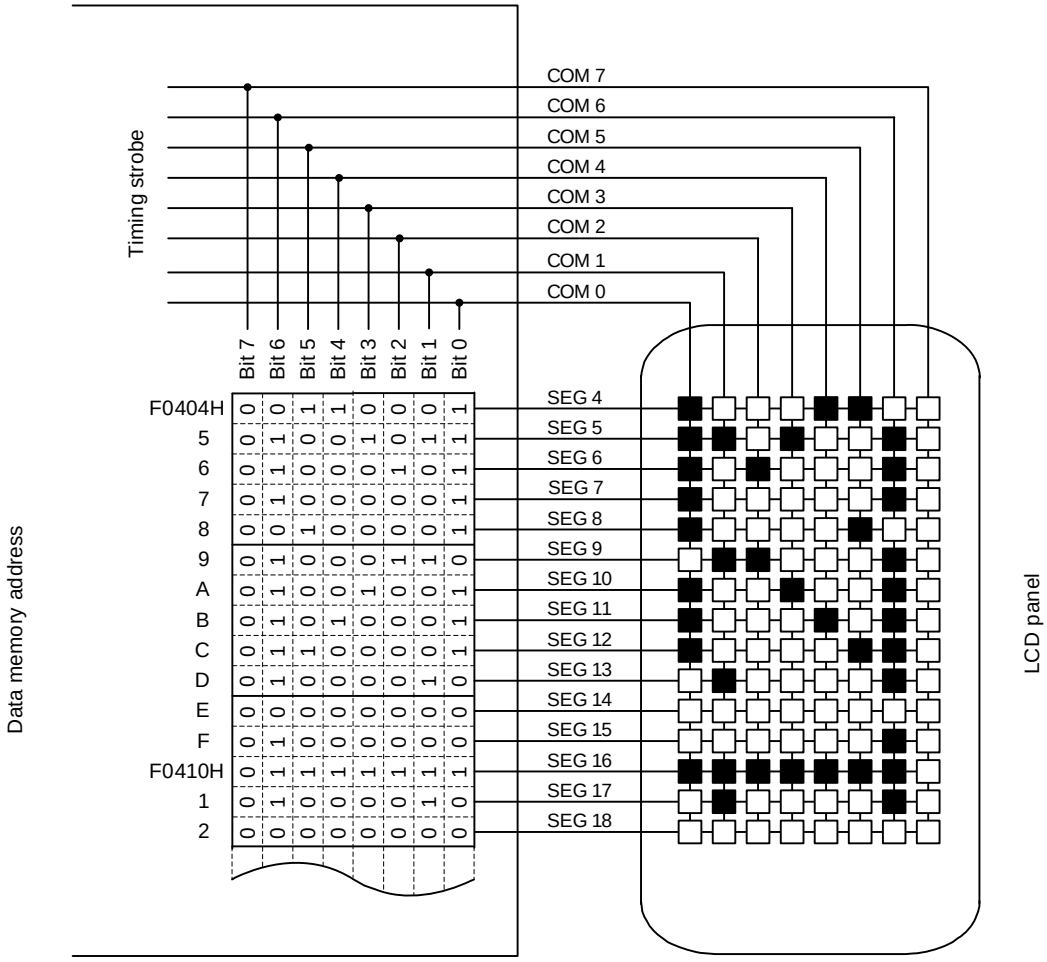

Figure 16-41. Eight-Time-Slice LCD Drive Waveform Examples Between SEG4 and Each Common Signals (1/4 Bias Method) (1/2)

(a) Waveform A

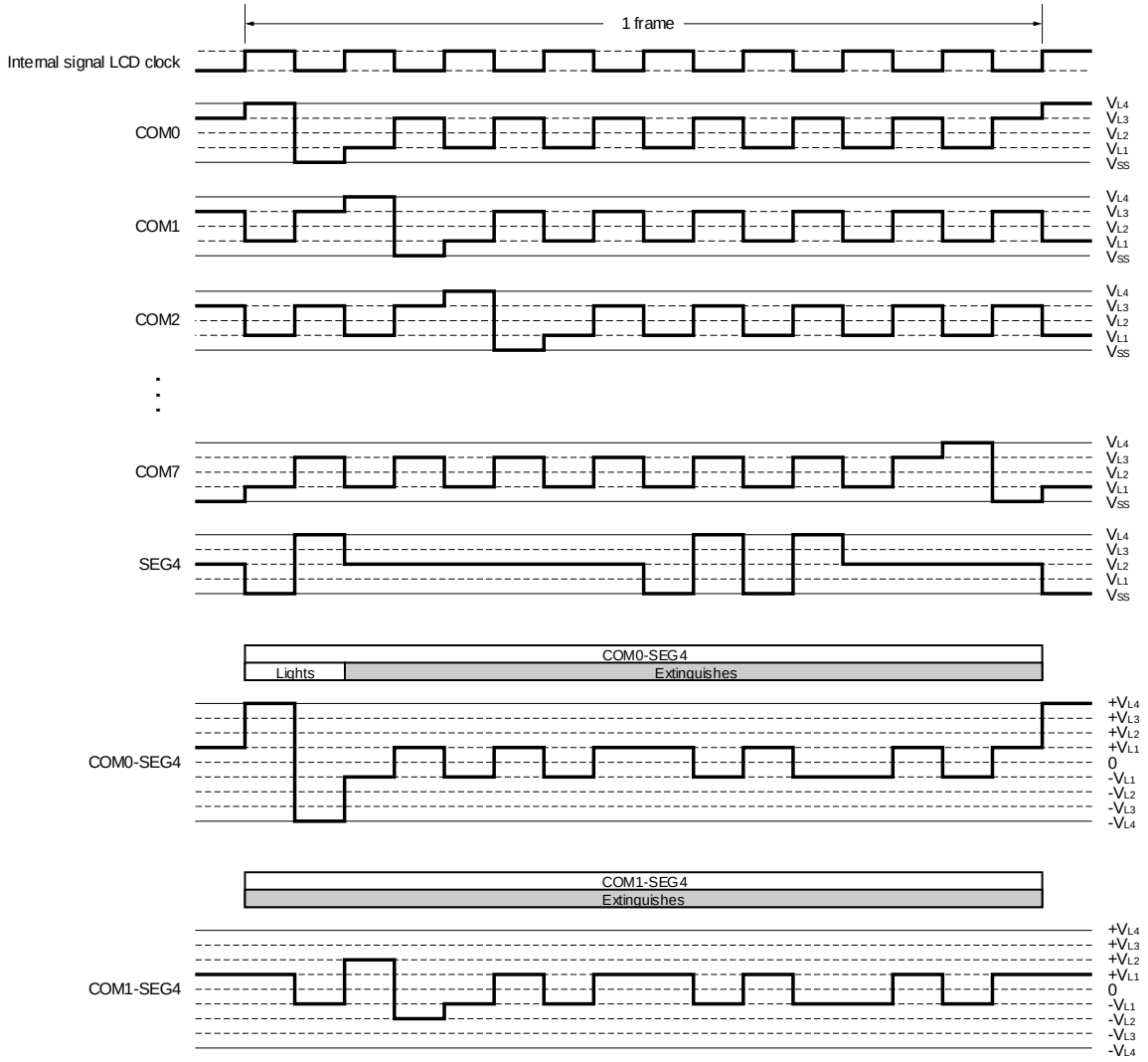

Figure 16-41. Eight-Time-Slice LCD Drive Waveform Examples Between SEG4 and Each Common Signals (1/4 Bias Method) (2/2)

(b) Waveform B

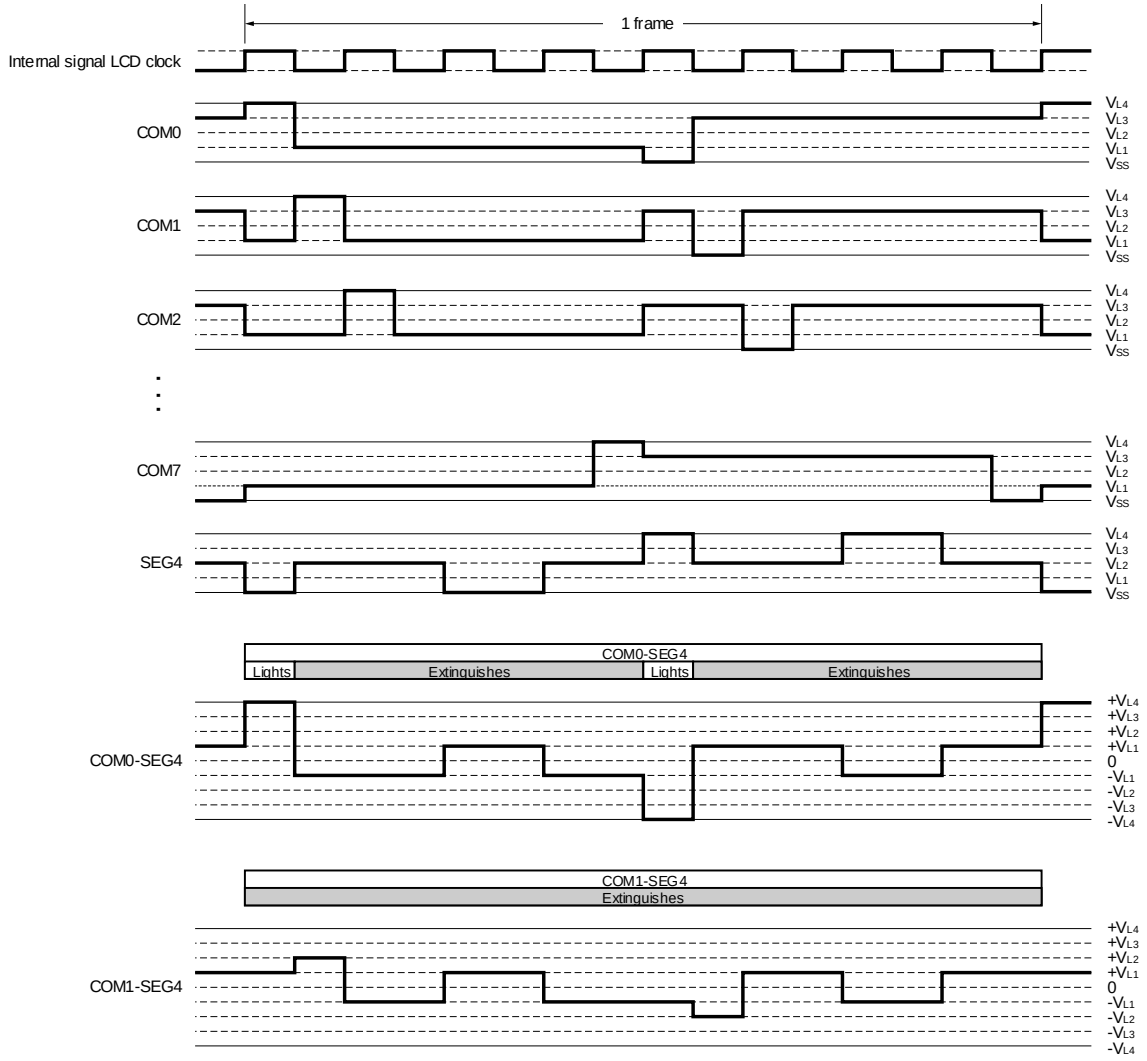

CHAPTER 17 MULTIPLIER AND DIVIDER/MULTIPLY-ACCUMULATOR

17.1 Functions of Multiplier and Divider/Multiply-Accumulator

The multiplier and divider/multiply-accumulator has the following functions.

- 16 bits × 16 bits = 32 bits (Unsigned)
- 16 bits × 16 bits = 32 bits (Signed)
- 16 bits × 16 bits + 32 bits = 32 bits (Unsigned)
- 16 bits × 16 bits + 32 bits = 32 bits (Signed)
- 32 bits ÷ 32 bits = 32 bits, 32-bits remainder (Unsigned)

17.2 Configuration of Multiplier and Divider/Multiply-Accumulator

The multiplier and divider/multiply-accumulator consists of the following hardware.

Table 17-1. Configuration of Multiplier and Divider/Multiply-Accumulator

Item	Configuration
Registers	Multiplication/division data register A (L) (MDAL) Multiplication/division data register A (H) (MDAH) Multiplication/division data register B (L) (MDBL) Multiplication/division data register B (H) (MDBH) Multiplication/division data register C (L) (MDCL) Multiplication/division data register C (H) (MDCH)
Control register	Multiplication/division control register (MDUC)

Figure 17-1 shows a block diagram of the multiplier and divider/multiply-accumulator.

Figure 17-1. Block Diagram of Multiplier and Divider/Multiply-Accumulator

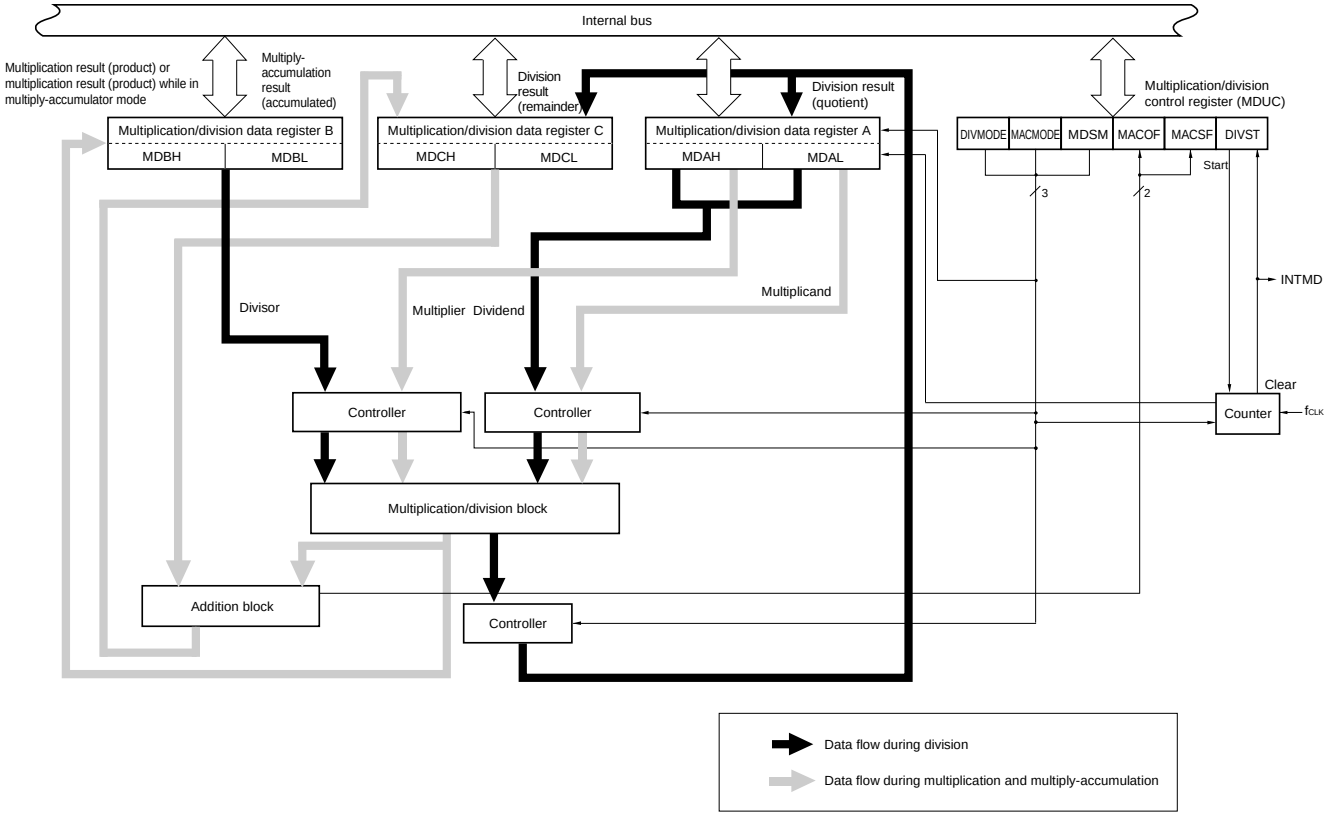

Remark f_{CLK}: CPU/peripheral hardware clock frequency

17.2.1 Multiplication/division data register A (MDAH, MDAL)

The MDAH and MDAL registers set the values that are used for a multiplication or division operation and store the operation result. They set the multiplier and multiplicand data in the multiplication mode or multiply-accumulator mode, and set the dividend data in the division mode. Furthermore, the operation result (quotient) is stored in the MDAH and MDAL registers in the division mode.

The MDAH and MDAL registers can be set by a 16-bit manipulation instruction.

Reset signal generation clears these registers to 0000H.

Figure 17-2. Format of Multiplication/Division Data Register A (MDAH, MDAL)

Address: FFFF0H, FFFF1H, FFFF2H, FFFF3H After reset: 0000H, 0000H R/W

Symbol	FFFF3H								FFFF2H							
MDAH	MDAH 15	MDAH 14	MDAH 13	MDAH 12	MDAH 11	MDAH 10	MDAH 9	MDAH 8	MDAH 7	MDAH 6	MDAH 5	MDAH 4	MDAH 3	MDAH 2	MDAH 1	MDAH 0

Symbol	FFFF1H								FFFF0H							
MDAL	MDAL 15	MDAL 14	MDAL 13	MDAL 12	MDAL 11	MDAL 10	MDAL 9	MDAL 8	MDAL 7	MDAL 6	MDAL 5	MDAL 4	MDAL 3	MDAL 2	MDAL 1	MDAL 0

Cautions 1. Do not rewrite the MDAH and MDAL registers values during division operation processing (when the multiplication/division control register (MDUC) value is 81H or C1H). The operation will be executed in this case, but the operation result will be an undefined value.

2. The MDAH and MDAL registers values read during division operation processing (when the MDUC register value is 81H or C1H) will not be guaranteed.

3. The data is in the two's complement format in either the multiplication mode (signed) or multiply-accumulator mode (signed).

The following table shows the functions of the MDAH and MDAL registers during operation execution.

Table 17-2. Functions of MDAH and MDAL Registers During Operation Execution

Operation Mode	Setting	Operation Result
Multiplication mode (unsigned) Multiply-accumulator mode (unsigned)	MDAH: Multiplier (unsigned) MDAL: Multiplicand (unsigned)	–
Multiplication mode (signed) Multiply-accumulator mode (signed)	MDAH: Multiplier (signed) MDAL: Multiplicand (signed)	–
Division mode (unsigned)	MDAH: Dividend (unsigned) (higher 16 bits) MDAL: Dividend (unsigned) (lower 16 bits)	MDAH: Division result (unsigned) Higher 16 bits MDAL: Division result (unsigned) Lower 16 bits

17.2.2 Multiplication/division data register B (MDBL, MDBH)

The MDBH and MDBL registers set the values that are used for multiplication or division operation and store the operation result. They store the operation result (product) in the multiplication mode and multiply-accumulator mode, and set the divisor data in the division mode.

The MDBH and MDBL registers can be set by a 16-bit manipulation instruction.

Reset signal generation clears these registers to 0000H.

Figure 17-3. Format of Multiplication/Division Data Register B (MDBH, MDBL)

Address: FFFF4H, FFFF5H, FFFF6H, FFFF7H After reset: 0000H, 0000H R/W

Symbol	FFFF7H								FFFF6H							
MDBH	MDBH 15	MDBH 14	MDBH 13	MDBH 12	MDBH 11	MDBH 10	MDBH 9	MDBH 8	MDBH 7	MDBH 6	MDBH 5	MDBH 4	MDBH 3	MDBH 2	MDBH 1	MDBH 0

Symbol	FFFF5H								FFFF4H							
MDBL	MDBL 15	MDBL 14	MDBL 13	MDBL 12	MDBL 11	MDBL 10	MDBL 9	MDBL 8	MDBL 7	MDBL 6	MDBL 5	MDBL 4	MDBHL 3	MDBL 2	MDBL 1	MDBL 0

Cautions 1. Do not rewrite the MDBH and MDBL registers values during division operation processing (when the multiplication/division control register (MDUC) value is 81H or C1H) or multiply-accumulation operation processing. The operation result will be an undefined value.

2. Do not set the MDBH and MDBL registers to 0000H in the division mode. If they are set, the operation result will be an undefined value.

3. The data is in the two's complement format in either the multiplication mode (signed) or multiply-accumulator mode (signed).

The following table shows the functions of the MDBH and MDBL registers during operation execution.

Table 17-3. Functions of MDBH and MDBL Registers During Operation Execution

Operation Mode	Setting	Operation Result
Multiplication mode (unsigned) Multiply-accumulator mode (unsigned)	–	MDBH: Multiplication result (product) (unsigned) Higher 16 bits MDBL: Multiplication result (product) (unsigned) Lower 16 bits
Multiplication mode (signed) Multiply-accumulator mode (signed)	–	MDBH: Multiplication result (product) (signed) Higher 16 bits MDBL: Multiplication result (product) (signed) Lower 16 bits
Division mode (unsigned)	MDBH: Divisor (unsigned) (higher 16 bits) MDBL: Divisor (unsigned) (lower 16 bits)	–

17.2.3 Multiplication/division data register C (MDCL, MDCH)

The MDCH and MDCL registers are used to store the accumulated result while in the multiply-accumulator mode or the remainder of the operation result while in the division mode. These registers are not used while in the multiplication mode.

The MDCH and MDCL registers can be set by a 16-bit manipulation instruction.

Reset signal generation clears these registers to 0000H.

Figure 17-4. Format of Multiplication/Division Data Register C (MDCH, MDCL)

Address: F00E0H, F00E1H, F00E2H, F00E3H After reset: 0000H, 0000H R/W

Symbol	F00E3H								F00E2H							
MDCH	MDCH 15	MDCH 14	MDCH 13	MDCH 12	MDCH 11	MDCH 10	MDCH 9	MDCH 8	MDCH 7	MDCH 6	MDCH 5	MDCH 4	MDCH 3	MDCH 2	MDCH 1	MDCH 0

Symbol	F00E1H								F00E0H							
MDCL	MDCL 15	MDCL 14	MDCL 13	MDCL 12	MDCL 11	MDCL 10	MDCL 9	MDCL 8	MDCL 7	MDCL 6	MDCL 5	MDCL 4	MDCL 3	MDCL 2	MDCL 1	MDCL 0

Cautions 1. The MDCH and MDCL registers values read during division operation processing (when the multiplication/division control register (MDUC) value is 81H or C1H) will not be guaranteed.

2. During multiply-accumulator processing, do not use software to rewrite the values of the MDCH and MDCL registers. If this is done, the operation result will be undefined.

3. The data is in the two's complement format in the multiply-accumulator mode (signed).

Table 17-4. Functions of MDCH and MDCL Registers During Operation Execution

Operation Mode	Setting	Operation Result
Multiplication mode (unsigned or signed)	–	–
Multiply-accumulator mode (unsigned)	MDCH: Initial accumulated value (unsigned) (higher 16 bits) MDCL: Initial accumulated value (unsigned) (lower 16 bits)	MDCH: accumulated value (unsigned) (higher 16 bits) MDCL: accumulated value (unsigned) (lower 16 bits)
Multiply-accumulator mode (signed)	MDCH: Initial accumulated value (signed) (higher 16 bits) MDCL: Initial accumulated value (signed) (lower 16 bits)	MDCH: accumulated value (signed) (higher 16 bits) MDCL: accumulated value (signed) (lower 16 bits)
Division mode (unsigned)	–	MDCH: Remainder (unsigned) (higher 16 bits) MDCL: Remainder (unsigned) (lower 16 bits)

The register configuration differs between when multiplication is executed and when division is executed, as follows.

● Register configuration during multiplication

<Multiplier A> <Multiplier B> <Product>

MDAL (bits 15 to 0) × MDAH (bits 15 to 0) = [MDBH (bits 15 to 0), MDBL (bits 15 to 0)]

● Register configuration during multiply-accumulation

<Multiplier A> <Multiplier B> < accumulated value > < accumulated result >

MDAL (bits 15 to 0) × MDAH (bits 15 to 0) + MDC (bits 31 to 0) = [MDCH (bits 15 to 0), MDCL (bits 15 to 0)]

(The multiplication result is stored in the MDBH (bits 15 to 0) and MDBL (bits 15 to 0).)

● Register configuration during division

<Dividend> <Divisor>

[MDAH (bits 15 to 0), MDAL (bits 15 to 0)] ÷ [MDBH (bits 15 to 0), MDBL (bits 15 to 0)] =

<Quotient> <Remainder>

[MDAH (bits 15 to 0), MDAL (bits 15 to 0)] ··· [MDCH (bits 15 to 0), MDCL (bits 15 to 0)]

17.3 Register Controlling Multiplier and Divider/Multiply-Accumulator

The multiplier and divider/multiply-accumulator is controlled by using the multiplication/division control register (MDUC).

17.3.1 Multiplication/division control register (MDUC)

The MDUC register is an 8-bit register that controls the operation of the multiplier and divider/multiply-accumulator.

The MDUC register can be set by a 1-bit or 8-bit memory manipulation instruction.

Note that the overflow flag (MACOF) and sign flag (MACSF) of the multiply-accumulation result (accumulated) are read-only flags.

Reset signal generation clears this register to 00H.

Figure 17-5. Format of Multiplication/Division Control Register (MDUC)

Address: F00E8H After reset: 00H R/W[Note 1]

Symbol	<7>	<6>	5	4	<3>	<2>	<1>	<0>
MDUC	DIVMODE	MACMODE	0	0	MDSM	MACOF	MACSF	DIVST

DIVMODE	MACMODE	MDSM	Operation mode selection
0	0	0	Multiplication mode (unsigned) (default)
0	0	1	Multiplication mode (signed)
0	1	0	Multiply-accumulator mode (unsigned)
0	1	1	Multiply-accumulator mode (signed)
1	0	0	Division mode (unsigned), generation of a division completion interrupt (INTMD)
1	1	0	Division mode (unsigned), not generation of a division completion interrupt (INTMD)
Other than above			Setting prohibited

MACOF	Overflow flag of multiply-accumulation result (accumulated value)
0	No overflow
1	With over flow

<Set condition>

- For the multiply-accumulator mode (unsigned)

  The bit is set when the accumulated value goes outside the range from 00000000h to FFFFFFFFh.

- For the multiply-accumulator mode (signed)

  The bit is set when the result of adding a positive product to a positive accumulated value exceeds 7FFFFFFFh and is negative, or when the result of adding a negative product to a negative accumulated value exceeds 80000000h and is positive.

MACSF	Sign flag of multiply-accumulation result (accumulated value)
0	The accumulated value is positive.
1	The accumulated value is negative.

Multiply-accumulator mode (unsigned): The bit is always 0.

Multiply-accumulator mode (signed): The bit indicates the sign bit of the accumulated value.

DIVST[Note 2]	Division operation start/stop
0	Division operation processing complete
1	Starts division operation/division operation processing in progress

(**Note** and **Cautions** are listed on the next page.)

Notes 1. Bits 1 and 2 are read-only bits.

2. The DIVST bit can only be set (1) in the division mode. In the division mode, division operation is started by setting (1) the DIVST bit. The DIVST bit is automatically cleared (0) when the operation ends. In the multiplication mode, operation is automatically started by setting the multiplier and multiplicand to multiplication/division data register A (MDAH, MDAL), respectively.

Cautions 1. Do not rewrite the DIVMODE, MDSM bits during operation processing (while the DIVST bit is 1). If it is rewritten, the operation result will be an undefined value.

2. The DIVST bit cannot be cleared (0) by using software during division operation processing (while the DIVST bit is 1).

17.4 Operations of Multiplier and Divider/Multiply-Accumulator

17.4.1 Multiplication (unsigned) operation

- Initial setting
  - <1> Set the multiplication/division control register (MDUC) to 00H.
  - <2> Set the multiplicand to multiplication/division data register A (L) (MDAL).
  - <3> Set the multiplier to multiplication/division data register A (H) (MDAH).
    (There is no preference in the order of executing steps <2> and <3>. Multiplication operation is automatically started when the multiplier and multiplicand are set to the MDAH and MDAL registers, respectively.)
- During operation processing
  - <4> Wait for at least one clock. The operation will end when one clock has been issued.
- Operation end
  - <5> Read the product (lower 16 bits) from multiplication/division data register B (L) (MDBL).
  - <6> Read the product (higher 16 bits) from multiplication/division data register B (H) (MDBH).
    (There is no preference in the order of executing steps <5> and <6>.)
- Next operation
  - <7> Start with the initial settings of each step to change the operation mode.
    When the same operation mode is used sequentially, settings <1> and <2> can be omitted.

Remark Steps <1> to <7> correspond to <1> to <7> in Figure 17-6.

Figure 17-6. Timing Diagram of Multiplication (Unsigned) Operation (2 × 3 = 6)

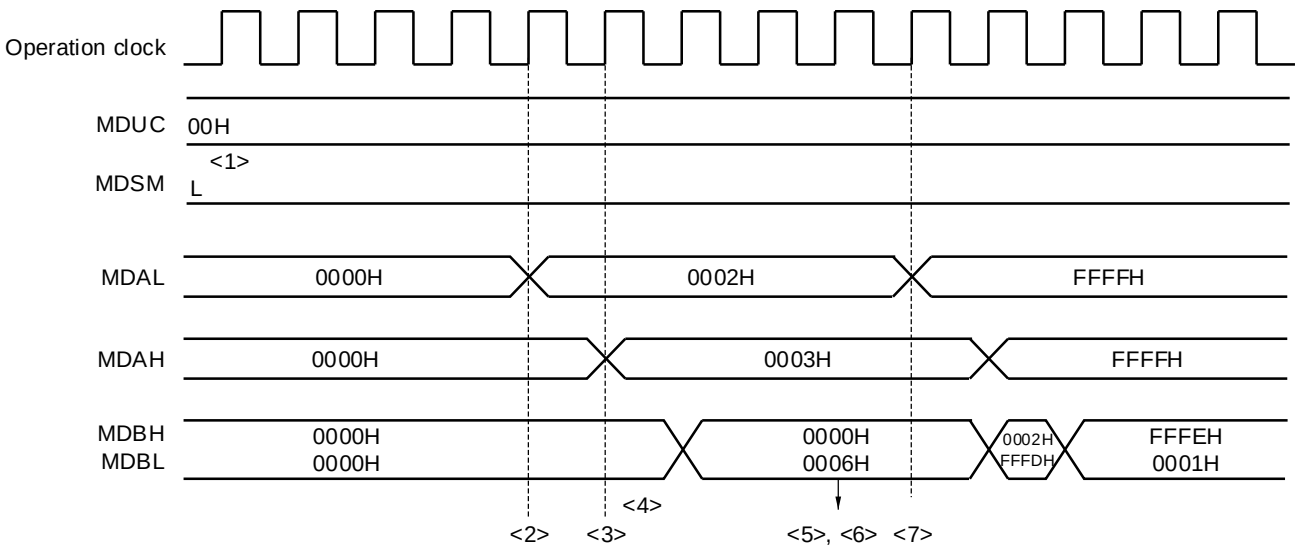

17.4.2 Multiplication (signed) operation

- Initial setting
  - <1> Set the multiplication/division control register (MDUC) to 08H.
  - <2> Set the multiplicand to multiplication/division data register A (L) (MDAL).
  - <3> Set the multiplier to multiplication/division data register A (H) (MDAH).
    (There is no preference in the order of executing steps <2> and <3>. Multiplication operation is automatically started when the multiplier and multiplicand are set to the MDAH and MDAL registers, respectively.)
- During operation processing
  - <4> Wait for at least one clock. The operation will end when one clock has been issued.
- Operation end
  - <5> Read the product (lower 16 bits) from multiplication/division data register B (L) (MDBL).
  - <6> Read the product (higher 16 bits) from multiplication/division data register B (H) (MDBH).
    (There is no preference in the order of executing steps <5> and <6>.)
- Next operation
  - <7> Start with the initial settings of each step to change the operation mode.
    When the same operation mode is used sequentially, settings <1> and <2> can be omitted.

Caution The data is in the two's complement format in multiplication mode (signed).

Remark Steps <1> to <7> correspond to <1> to <7> in Figure 17-7.

Figure 17-7. Timing Diagram of Multiplication (Signed) Operation (–2 × 32767 = –65534)

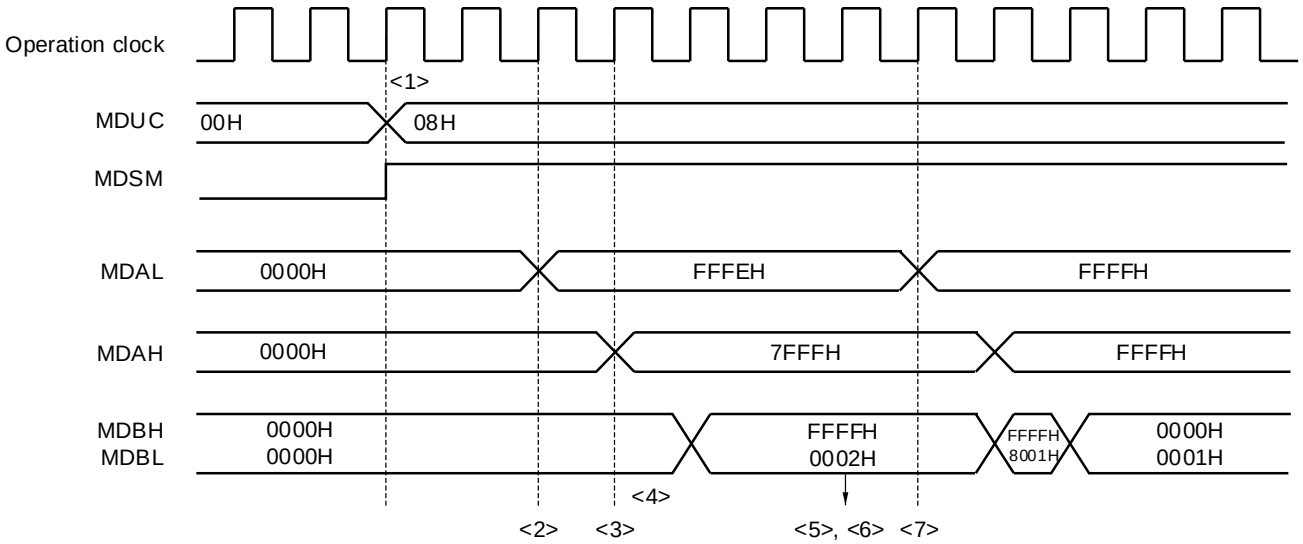

17.4.3 Multiply-accumulation (unsigned) operation

- Initial setting
  - <1> Set the multiplication/division control register (MDUC) to 40H.
  - <2> Set the initial accumulated value of higher 16 bits to multiplication/division data register C (L) (MDCL).
  - <3> Set the initial accumulated value of lower 16 bits to multiplication/division data register C (H) (MDCH).
  - <4> Set the multiplicand to multiplication/division data register A (L) (MDAL).
  - <5> Set the multiplier to multiplication/division data register A (H) (MDAH).
    (There is no preference in the order of executing steps <2>, <3>, and <4>. Multiplication operation is automatically started when the multiplier is set to the MDAH register, respectively.)
- During operation processing
  - <6> The multiplication operation finishes in one clock cycle.
    (The multiplication result is stored in multiplication/division data register B (L) (MDBL) and multiplication/division data register B (H) (MDBH).)
  - <7> After <6>, the multiply-accumulation operation finishes in one additional clock cycle. (There is a wait of at least two clock cycles after specifying the initial settings is finished (<5>).)
- Operation end
  - <8> Read the accumulated value (lower 16 bits) from the MDCL register.
  - <9> Read the accumulated value (higher 16 bits) from the MDCH register.
    (There is no preference in the order of executing steps <8> and <9>.)
  - (<10> If the result of the multiply-accumulation operation causes an overflow, the MACOF bit is set to 1, INTMD signal is occurred.)
- Next operation
  - <11> Start with the initial settings of each step to change the operation mode.
    When the same operation mode is used sequentially, settings <1> to <4> can be omitted.

Remark Steps <1> to <10> correspond to <1> to <10> in Figure 17-8.

Figure 17-8. Timing Diagram of Multiply-Accumulation (Unsigned) Operation
(2 × 3 + 3 = 9 → 32767 × 2 + 4294901762 = 0 (over flow generated))

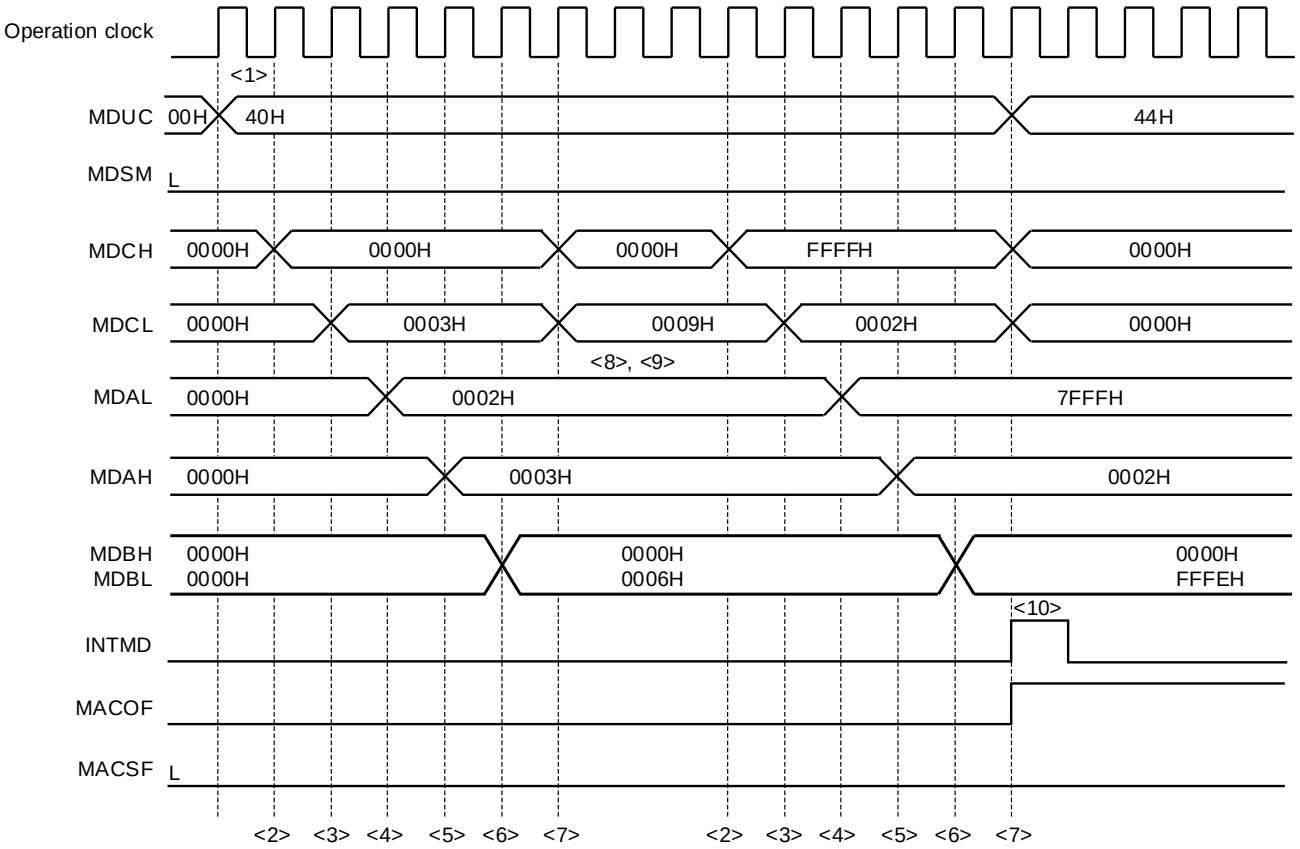

17.4.4 Multiply-accumulation (signed) operation

- Initial setting
  - <1> Set the multiplication/division control register (MDUC) to 48H.
  - <2> Set the initial accumulated value of higher 16 bits to multiplication/division data register C (H) (MDCH).
    (<3> If the accumulated value in the MDCH register is negative, the MACSF bit is set to 1.)
  - <4> Set the initial accumulated value of lower 16 bits to multiplication/division data register C (L) (MDCL).
  - <5> Set the multiplicand to multiplication/division data register A (L) (MDAL).
  - <6> Set the multiplier to multiplication/division data register A (H) (MDAH).
    (There is no preference in the order of executing steps <2>, <4>, and <5>. Multiplication operation is automatically started when the multiplier is set to the MDAH register of <6>, respectively.)
- During operation processing
  - <7> The multiplication operation finishes in one clock cycle.
    (The multiplication result is stored in multiplication/division data register B (L) (MDBL) and multiplication/division data register B (H) (MDBH).)
  - <8> After <7>, the multiply-accumulation operation finishes in one additional clock cycle. (There is a wait of at least two clock cycles after specifying the initial settings is finished (<6>).)
- Operation end
  - <9> If the accumulated value stored in the MDCL and MDCH registers is positive, the MACSF bit is cleared to 0.
  - <10> Read the accumulated value (lower 16 bits) from the MDCL register.
  - <11> Read the accumulated value (higher 16 bits) from the MDCH register.
    (There is no preference in the order of executing steps <10> and <11>.)
  - (<12> If the result of the multiply-accumulation operation causes an overflow, the MACOF bit is set to 1, INTMD signal is occurred.)
- Next operation
  - <13> Start with the initial settings of each step to change the operation mode.
    When the same operation mode is used sequentially, settings <1> to <5> can be omitted.

Caution The data is in the two's complement format in multiply-accumulation (signed) operation.

Remark Steps <1> to <12> correspond to <1> to <12> in Figure 17-9.

Figure 17-9. Timing Diagram of Multiply-Accumulation (Signed) Operation
(2 × 3 + (–4) = 2 → 32767 × (–1) + (–2147483647) = –2147516414 (overflow occurs.))

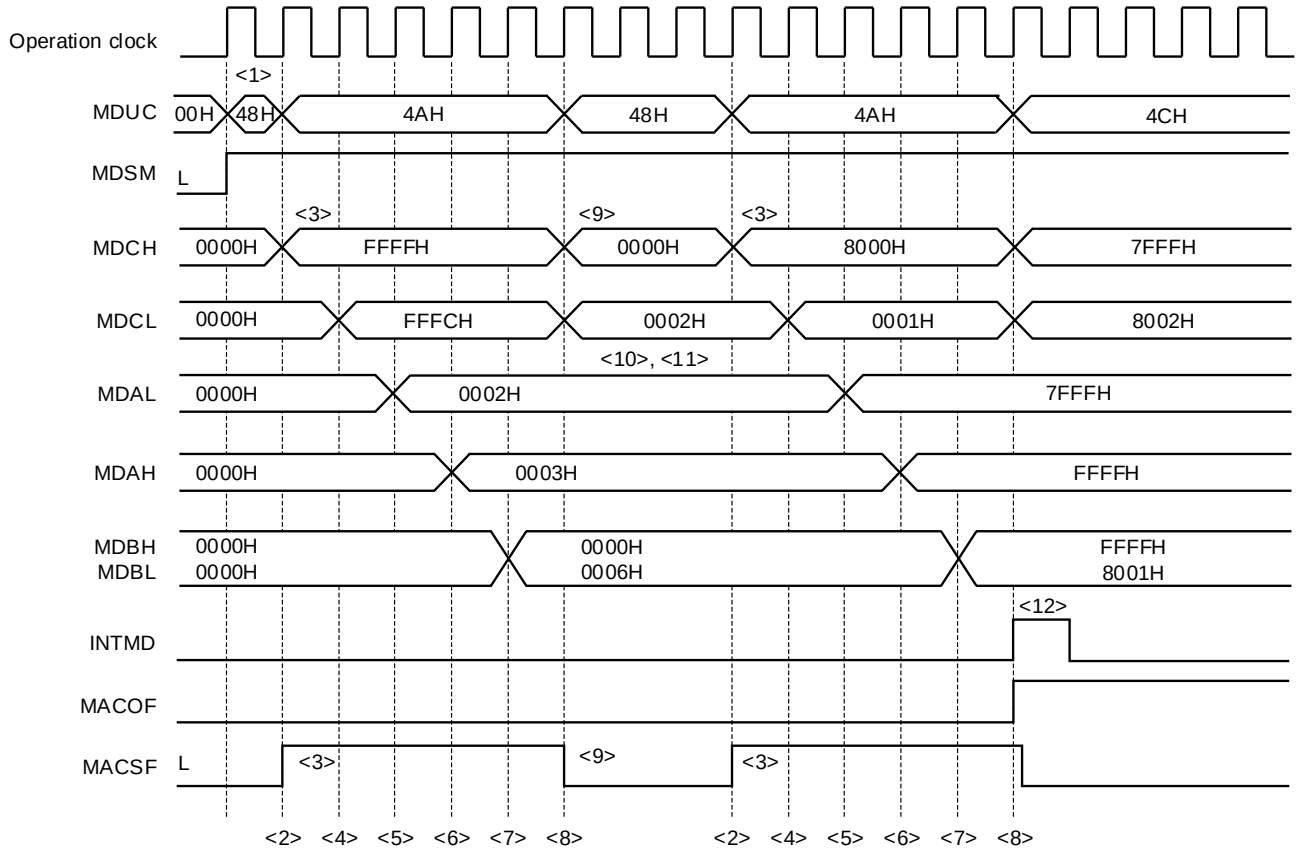

17.4.5 Division operation

- Initial setting
  - <1> Set the multiplication/division control register (MDUC) to 80H.
  - <2> Set the dividend (higher 16 bits) to multiplication/division data register A (H) (MDAH).
  - <3> Set the dividend (lower 16 bits) to multiplication/division data register A (L) (MDAL).
  - <4> Set the divisor (higher 16 bits) to multiplication/division data register B (H) (MDBH).
  - <5> Set the divisor (lower 16 bits) to multiplication/division data register B (L) (MDBL).
  - <6> Set bit 0 (DIVST) of the MDUC register to 1.
    (There is no preference in the order of executing steps <2> to <5>.)
- During operation processing
  - <7> The operation will end when one of the following processing is completed.
    - A wait of at least 16 clocks (The operation will end when 16 clocks have been issued.)
    - A check whether the DIVST bit has been cleared

    (The read values of the MDBL, MDBH, MDCL, and MDCH registers during operation processing are not guaranteed.)
- Operation end
  - <8> The DIVST bit is cleared and the operation ends. At this time, an interrupt request signal (INTMD) is generated if the operation was performed with MACMODE = 0.
  - <9> Read the quotient (lower 16 bits) from the MDAL register.
  - <10> Read the quotient (higher 16 bits) from the MDAH register.
  - <11> Read the remainder (lower 16 bits) from multiplication/division data register C (L) (MDCL).
  - <12> Read the remainder (higher 16 bits) from multiplication/division data register C (H) (MDCH).
    (There is no preference in the order of executing steps <9> to <12>.)
- Next operation
  - <13> Start with the initial settings of each step to change the operation mode.
    When the same operation mode is used sequentially, settings <1> to <5> can be omitted.

Remark Steps <1> to <12> correspond to <1> to <12> in Figure 17-10.

Figure 17-10. Timing Diagram of Division Operation (Example: 35 ÷ 6 = 5, Remainder 5)

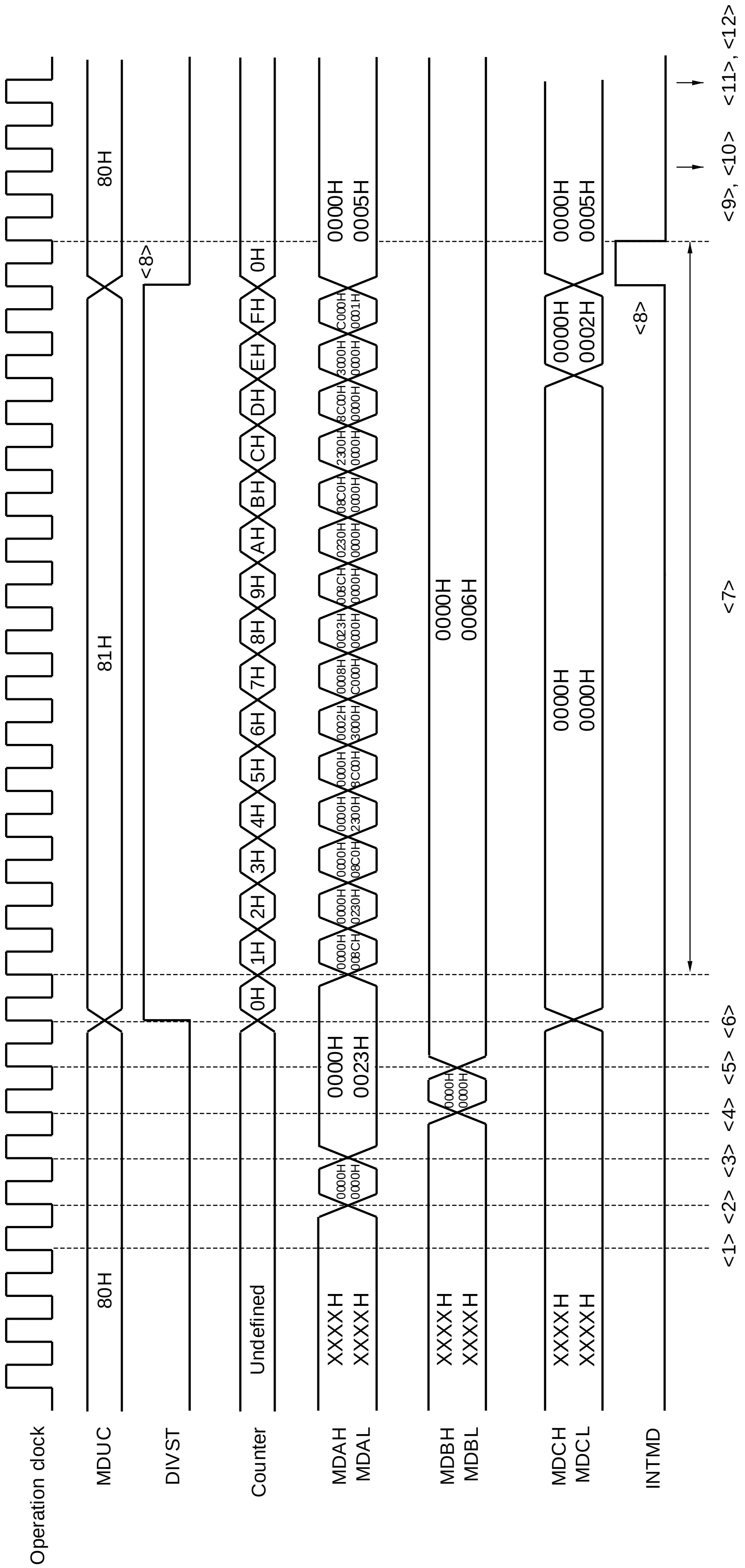

CHAPTER 18 DMA CONTROLLER

The RL78/L13 has an internal DMA (Direct Memory Access) controller.

Data can be automatically transferred between the peripheral hardware supporting DMA, SFRs, and internal RAM without via CPU.

As a result, the normal internal operation of the CPU and data transfer can be executed in parallel with transfer between the SFR and internal RAM, and therefore, a large capacity of data can be processed. In addition, real-time control using communication, timer, and A/D can also be realized.

18.1 Functions of DMA Controller

○ Number of DMA channels: 4 channels
○ Transfer unit: 8 or 16 bits
○ Maximum transfer unit: 1024 times
○ Transfer type: 2-cycle transfer (One transfer is processed in 2 clocks and the CPU stops during that processing.)
○ Transfer mode: Single-transfer mode
○ Transfer request: Selectable from the following peripheral hardware interrupts
- A/D converter
- Serial interface
  (CSI00, CSI10, UART0 to UART3)
- Timer array unit (channel 0, 1, 2, or 3)
- 16-bit timer KB20

○ Transfer target: Between SFR and internal RAM

Here are examples of functions using DMA.
- Successive transfer of serial interface
- Consecutive capturing of A/D conversion results
- Capturing port value at fixed interval

18.2 Configuration of DMA Controller

The DMA controller includes the following hardware.

Table 18-1. Configuration of DMA Controller

Item	Configuration
Address registers	● DMA SFR address registers 0 to 3 (DSA0 to DSA3) ● DMA RAM address registers 0 to 3 (DRA0 to DRA3)
Count register	● DMA byte count registers 0 to 3 (DBC0 to DBC3)
Control registers	● DMA mode control registers 0 to 3 (DMC0 to DMC3) ● DMA operation control registers 0 to 3 (DRC0 to DRC3)

18.2.1 DMA SFR address register n (DSAn)

This is an 8-bit register that is used to set an SFR address that is the transfer source or destination of DMA channel n.
Set the lower 8 bits of the SFR addresses FFF00H to FFFFFH.
This register is not automatically incremented but fixed to a specific value.
In the 16-bit transfer mode, the least significant bit is ignored and is treated as an even address.
The DSAn register can be read or written in 8-bit units. However, it cannot be written during DMA transfer.
Reset signal generation clears this register to 00H.

Figure 18-1. Format of DMA SFR Address Register n (DSAn)

Address: FFFB0H (DSA0), FFFB1H (DSA1), F0200H (DSA2), F0201H (DSA3) After reset: 00H R/W

	7	6	5	4	3	2	1	0
DSAn								

Remark n: DMA channel number (n = 0 to 3)

18.2.2 DMA RAM address register n (DRAn)

This is a 16-bit register that is used to set a RAM address that is the transfer source or destination of DMA channel n.

Addresses of the internal RAM area other than the general-purpose registers (see **Table 18-2**) can be set to this register.

Set the lower 16 bits of the RAM address.

This register is automatically incremented when DMA transfer has been started. It is incremented by +1 in the 8-bit transfer mode and by +2 in the 16-bit transfer mode. DMA transfer is started from the address set to this DRAn register. When the data of the last address has been transferred, the DRAn register stops with the value of the last address +1 in the 8-bit transfer mode, and the last address +2 in the 16-bit transfer mode.

In the 16-bit transfer mode, the least significant bit is ignored and is treated as an even address.

The DRAn register can be read or written in 8-bit or 16-bit units. However, it cannot be written during DMA transfer.

Reset signal generation clears this register to 0000H.

Figure 18-2. Format of DMA RAM Address Register n (DRAn)

Address: FFFB2H, FFFB3H (DRA0), FFFB4H, FFFB5H (DRA1) , F0202H, F0203H (DRA2), F0204H, F0205H (DRA3) After reset: 0000H R/W

DRA0H: FFFB3H	DRA0L: FFFB2H
DRA1H: FFFB5H	DRA1L: FFFB4H
DRA2H: F0203H	DRA2L: F0202H
DRA3H: F0205H	DRA3L: F0204H

	15	14	13	12	11	10	9	8	7	6	5	4	3	2	1	0
DRAn																

(n = 0 to 3)

Table 18-2. Internal RAM Area other than the General-purpose Registers

Part Number	Internal RAM Area Other than the General-purpose Registers
R5F10WLA, R5F10WMA	FFB00H to FFEDFH
R5F10WLC, R5F10WMC	FF900H to FFEDFH
R5F10WLD, R5F10WMD	FF700H to FFEDFH
R5F10WLE, R5F10WME	FEF00H to FFEDFH
R5F10WLF, R5F10WMF	FF700H to FFEDFH
R5F10WLG, R5F10WMG	FDF00H to FFEDFH

Remark n: DMA channel number (n = 0 to 3)

18.2.3 DMA byte count register n (DBCn)

This is a 10-bit register that is used to set the number of times DMA channel n executes transfer. Be sure to set the number of times of transfer to this DBCn register before executing DMA transfer (up to 1024 times).

Each time DMA transfer has been executed, this register is automatically decremented. By reading this DBCn register during DMA transfer, the remaining number of times of transfer can be learned.

The DBCn register can be read or written in 8-bit or 16-bit units. However, it cannot be written during DMA transfer.

Reset signal generation clears this register to 0000H.

Figure 18-3. Format of DMA Byte Count Register n (DBCn)

Address: FFFB6H, FFFB7H (DBC0), FFFB8H, FFFB9H (DBC1) After reset: 0000H R/W
F0206H, F0207H (DBC2), F0208H, F0209H (DBC3)

DBC0H: FFFB7H
DBC1H: FFFB9H
DBC2H: F0207H
DBC3H: F0209H

DBC0L: FFFB6H
DBC1L: FFFB8H
DBC2L: F0206H
DBC3L: F0208H

	15	14	13	12	11	10	9	8	7	6	5	4	3	2	1	0
DBCn	0	0	0	0	0	0										

(n = 0 to 3)

DBCn[9:0]	Number of Times of Transfer (When DBCn is Written)	Remaining Number of Times of Transfer (When DBCn is Read)
000H	1024	Completion of transfer or waiting for 1024 times of DMA transfer
001H	1	Waiting for remaining one time of DMA transfer
002H	2	Waiting for remaining two times of DMA transfer
003H	3	Waiting for remaining three times of DMA transfer
• • •	• • •	• • •
3FEH	1022	Waiting for remaining 1022 times of DMA transfer
3FFH	1023	Waiting for remaining 1023 times of DMA transfer

Cautions 1. Be sure to clear bits 15 to 10 to "0".

2. If the general-purpose register is specified or the internal RAM space is exceeded as a result of continuous transfer, the general-purpose register or SFR space are written or read, resulting in loss of data in these spaces. Be sure to set the number of times of transfer that is within the internal RAM space.

Remark n: DMA channel number (n = 0 to 3)

18.3 Registers Controlling DMA Controller

DMA controller is controlled by the following registers.

- DMA mode control register n (DMCn)
- DMA operation control register n (DRCn)

Remark n: DMA channel number (n = 0 to 3)

18.3.1 DMA mode control register n (DMCn)

The DMCn register is a register that is used to set a transfer mode of DMA channel n. It is used to select a transfer direction, data size, setting of pending, and start source. Bit 7 (STGn) is a software trigger that starts DMA.

Rewriting bits 6, 5, and 3 to 0 of the DMCn register is prohibited during operation (when DSTn = 1).

The DMCn register can be set by a 1-bit or 8-bit memory manipulation instruction.

Reset signal generation clears this register to 00H.

Figure 18-4. Format of DMA Mode Control Register n (DMCn) (1/3)

Address: FFFBAH (DMC0), FFFBBH (DMC1), F020AH (DMC2), F020BH (DMC3) After reset: 00H R/W

Symbol	<7>	<6>	<5>	<4>	3	2	1	0
DMCn	STGn	DRSn	DSn	DWAITn	IFCn3	IFCn2	IFCn1	IFCn0

STGn[Note 1]	DMA transfer start software trigger
0	No trigger operation
1	DMA transfer is started when DMA operation is enabled (DENn = 1).
DMA transfer is performed once by writing 1 to the STGn bit when DMA operation is enabled (DENn = 1). When this bit is read, 0 is always read.	

DRSn	Selection of DMA transfer direction
0	SFR to internal RAM
1	Internal RAM to SFR

DSn	Specification of transfer data size for DMA transfer
0	8 bits
1	16 bits

DWAITn [Note 2]	Pending of DMA transfer
0	Executes DMA transfer upon DMA start request (not held pending).
1	Holds DMA start request pending if any.
DMA transfer that has been held pending can be started by clearing the value of the DWAITn bit to 0. It takes 2 clocks to actually hold DMA transfer pending when the value of the DWAITn bit is set to 1.	

Notes 1. The software trigger (STGn) can be used regardless of the IFCn0 to IFCn3 bits values.

2. When DMA transfer is held pending while using two or more DMA channels, be sure to hold the DMA transfer pending for all channels (by setting the DWAIT0, DWAIT1, DWAIT2, and DWAIT3 bits to 1).

Remark n: DMA channel number (n = 0 to 3)

Figure 18-4. Format of DMA Mode Control Register n (DMCn) (2/3)

Address: FFFBAH (DMC0), FFFBBH (DMC1) After reset: 00H R/W

Symbol	<7>	<6>	<5>	<4>	3	2	1	0
DMCn	STGn	DRSn	DSn	DWAITn	IFCn3	IFCn2	IFCn1	IFCn0

(When n = 0 or 1)

IFCn 3	IFCn 2	IFCn 1	IFCn 0	Selection of DMA start source[Note]	
				Trigger signal	Trigger contents
0	0	0	0	–	Disables DMA transfer by interrupt. (Only software trigger is enabled.)
0	0	0	1	INTAD	A/D conversion end interrupt
0	0	1	0	INTTM00	End of timer channel 00 count or capture end interrupt
0	0	1	1	INTTM01	End of timer channel 01 count or capture end interrupt
0	1	0	0	INTTM02	End of timer channel 02 count or capture end interrupt
0	1	0	1	INTTM03	End of timer channel 03 count or capture end interrupt
0	1	1	0	INTST0/INTCSI00	UART0 transmission transfer end or buffer empty interrupt/CSI00 transfer end or buffer empty interrupt
0	1	1	1	INTSR0	UART0 reception transfer end interrupt
1	0	0	0	INTST1/INTCSI10	UART1 transmission transfer end or buffer empty interrupt/CSI10 transfer end or buffer empty interrupt
1	0	0	1	INTSR1	UART1 reception transfer end interrupt
1	0	1	0	INTST2	UART2 transmission transfer end or buffer empty interrupt
1	0	1	1	INTSR2	UART2 reception transfer end interrupt
Other than above				Setting prohibited	

Note The software trigger (STGn) can be used regardless of the IFCn0 to IFCn3 bits values.

Remark n: DMA channel number (n = 0, 1)

Figure 18-4. Format of DMA Mode Control Register n (DMCn) (3/3)

Address: F020AH (DMC2), F020BH (DMC3) After reset: 00H R/W

Symbol	<7>	<6>	<5>	<4>	3	2	1	0
DMCn	STGn	DRSn	DSn	DWAITn	IFCn3	IFCn2	IFCn1	IFCn0

(When n = 2 or 3)

IFCn 3	IFCn 2	IFCn 1	IFCn 0	Selection of DMA start source[Note 1]	
				Trigger signal	Trigger contents
0	0	0	0	–	Disables DMA transfer by interrupt. (Only software trigger is enabled.)
0	0	0	1	INTAD	A/D conversion end interrupt
0	0	1	0	INTTKB2	Timer KB20 count end interrupt
0	1	1	0	INTST3[Note 2]	UART3 transmission transfer end or buffer empty interrupt
0	1	1	1	INTSR3[Note 2]	UART3 reception transfer end interrupt
1	0	0	0	INTST1/INTCSI10	UART1 transmission transfer end or buffer empty interrupt/CSI10 transfer end or buffer empty interrupt
1	0	0	1	INTSR1	UART1 reception transfer end interrupt
1	0	1	0	INTST2	UART2 transmission transfer end or buffer empty interrupt
1	0	1	1	INTSR2	UART2 reception transfer end interrupt
Other than above				Setting prohibited	

Notes 1. The software trigger (STGn) can be used regardless of the IFCn0 to IFCn3 bits values.

2. 80-pin products only.

Remark n: DMA channel number (n = 2, 3)

18.3.2 DMA operation control register n (DRCn)

The DRCn register is a register that is used to enable or disable transfer of DMA channel n.

Rewriting bit 7 (DENn) of this register is prohibited during operation (when DSTn = 1).

The DRCn register can be set by a 1-bit or 8-bit memory manipulation instruction.

Reset signal generation clears this register to 00H.

Figure 18-5. Format of DMA Operation Control Register n (DRCn)

Address: FFFBCH (DRC0), FFFBDH (DRC1), F020CH (DRC2), F020DH (DRC3) After reset: 00H R/W

Symbol	<7>	6	5	4	3	2	1	<0>
DRCn	DENn	0	0	0	0	0	0	DSTn

DENn	DMA operation enable flag
0	Disables operation of DMA channel n (stops operating clock of DMA).
1	Enables operation of DMA channel n.
DMAC waits for a DMA trigger when DSTn = 1 after DMA operation is enabled (DENn = 1).	

DSTn	DMA transfer mode flag
0	DMA transfer of DMA channel n is completed.
1	DMA transfer of DMA channel n is not completed (still under execution).
DMAC waits for a DMA trigger when DSTn = 1 after DMA operation is enabled (DENn = 1). When a software trigger (STGn) or the start source trigger set by the IFCn3 to IFCn0 bits is input, DMA transfer is started. When DMA transfer is completed after that, this bit is automatically cleared to 0. Write 0 to this bit to forcibly terminate DMA transfer under execution.	

Caution The DSTn flag is automatically cleared to 0 when a DMA transfer is completed. Writing the DENn flag is enabled only when DSTn = 0. When a DMA transfer is terminated without waiting for generation of the interrupt (INTDMAn) of DMAn, therefore, set the DSTn bit to 0 and then the DENn bit to 0 (for details, see 18.5.5 Forced termination by software).

Remark n: DMA channel number (n = 0 to 3)

18.4 Operation of DMA Controller

18.4.1 Operation procedure

<1> The DMA controller is enabled to operate when DENn = 1. Before writing the other registers, be sure to set the DENn bit to 1. Use 80H to write with an 8-bit manipulation instruction.

<2> Set an SFR address, a RAM address, the number of times of transfer, and a transfer mode of DMA transfer to DMA SFR address register n (DSAn), DMA RAM address register n (DRAn), DMA byte count register n (DBCn), and DMA mode control register n (DMCn).

<3> The DMA controller waits for a DMA trigger when DSTn = 1. Use 81H to write with an 8-bit manipulation instruction.

<4> When a software trigger (STGn) or a start source trigger specified by the IFCn3 to IFCn0 bits is input, a DMA transfer is started.

<5> Transfer is completed when the number of times of transfer set by the DBCn register reaches 0, and transfer is automatically terminated by occurrence of an interrupt (INTDMAn).

<6> Stop the operation of the DMA controller by clearing the DENn bit to 0 when the DMA controller is not used.

Figure 18-6. Operation Procedure

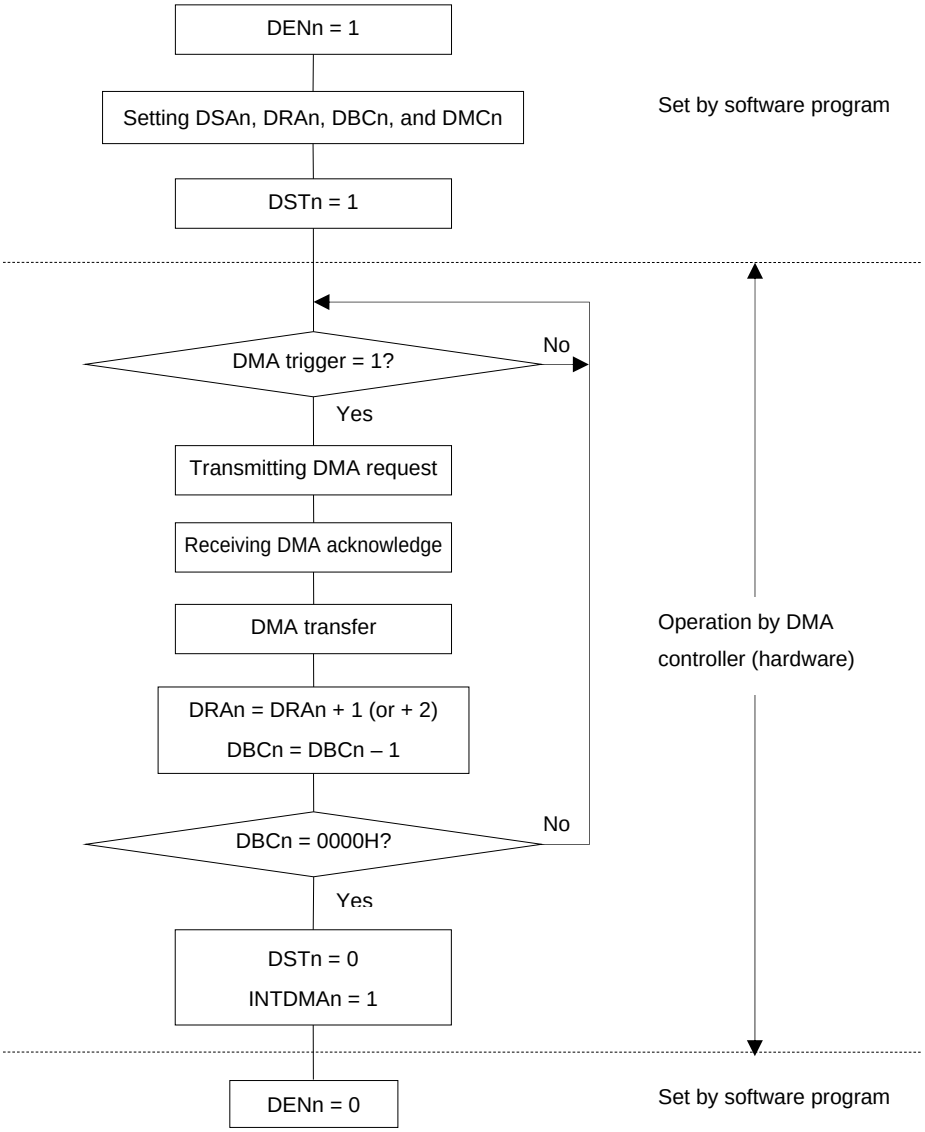

Remark n: DMA channel number (n = 0 to 3)

18.4.2 Transfer mode

The following four modes can be selected for DMA transfer by using bits 6 and 5 (DRSn and DSn) of DMA mode control register n (DMCn).

DRSn	DSn	DMA Transfer Mode
0	0	Transfer from SFR of 1-byte data (fixed address) to RAM (address is incremented by +1)
0	1	Transfer from SFR of 2-byte data (fixed address) to RAM (address is incremented by +2)
1	0	Transfer from RAM of 1-byte data (address is incremented by +1) to SFR (fixed address)
1	1	Transfer from RAM of 2-byte data (address is incremented by +2) to SFR (fixed address)

By using these transfer modes, up to 1024 bytes of data can be consecutively transferred by using the serial interface, data resulting from A/D conversion can be consecutively transferred, and port data can be scanned at fixed time intervals by using a timer.

18.4.3 Termination of DMA transfer

When DBCn = 00H and DMA transfer is completed, the DSTn bit is automatically cleared to 0. An interrupt request (INTDMAn) is generated and transfer is terminated.

When the DSTn bit is cleared to 0 to forcibly terminate DMA transfer, DMA byte count register n (DBCn) and DMA RAM address register n (DRAn) hold the value when transfer is terminated.

The interrupt request (INTDMAn) is not generated if transfer is forcibly terminated.

Remark n: DMA channel number (n = 0 to 3)

18.5 Example of Setting of DMA Controller

18.5.1 Simplified SPI (CSI) consecutive transmission

A flowchart showing an example of setting for simplified SPI (CSI) consecutive transmission is shown below.

- Consecutive transmission of CSI10 (256 bytes)
- DMA channel 0 is used for DMA transfer.
- DMA start source: INTCSI10 (software trigger (STG0) only for the first start source)
- Interrupt of CSI10 is specified by IFC03 to IFC00 = 1000B.
- Transfers FFB00H to FFBFFH (256 bytes) of RAM to FFF44H of the data register (SIO10) of simplified SPI (CSI).

Remark IFC03 to IFC00: Bits 3 to 0 of DMA mode control registers 0 (DMC0)

<R> **Note** Although the CSI function is generally called SPI, it is also called CSI in this product, so it is referred to as such in this manual.

Figure 18-7. Example of Setting for Simplified SPI (CSI) Consecutive Transmission

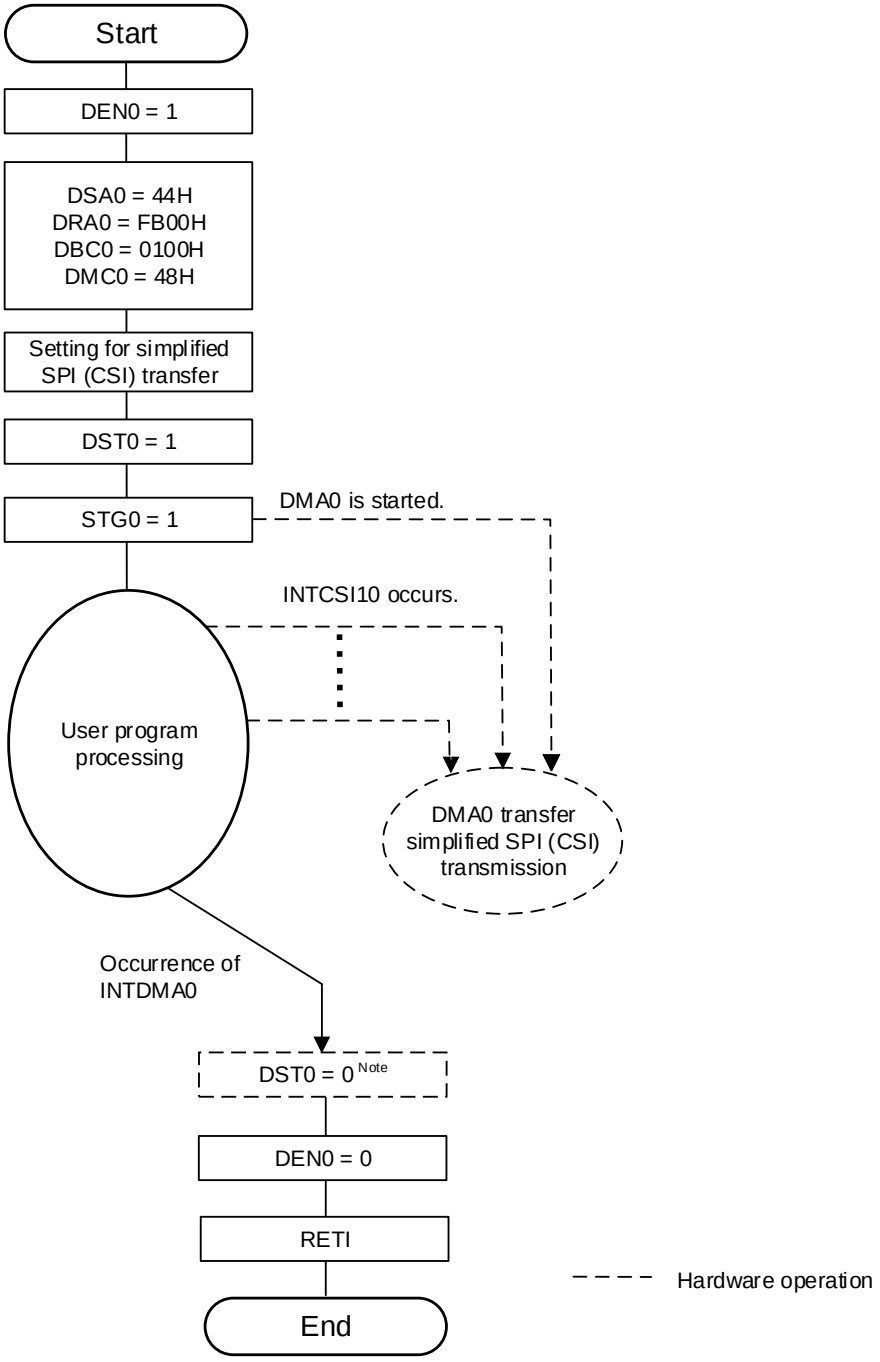

Note The DST0 flag is automatically cleared to 0 when a DMA transfer is completed.
Writing the DEN0 flag is enabled only when DST0 = 0. To terminate a DMA transfer without waiting for occurrence of the interrupt of DMA0 (INTDMA0), set the DST0 bit to 0 and then the DEN0 bit to 0 (for details, see **18.5.5 Forced termination by software**).

The fist trigger for consecutive transmission is not started by the interrupt of simplified SPI (CSI). In this example, it start by a software trigger.

Simplified SPI (CSI) transmission of the second time and onward is automatically executed.

A DMA interrupt (INTDMA0) occurs when the last transmit data has been written to the data register.

18.5.2 Consecutive capturing of A/D conversion results

A flowchart of an example of setting for consecutively capturing A/D conversion results is shown below.

- Consecutive capturing of A/D conversion results.
- DMA channel 1 is used for DMA transfer.
- DMA start source: INTAD
- Interrupt of A/D is specified by IFC13 to IFC10 = 0001B.
- Transfers FFF1EH and FFF1FH (2 bytes) of the 10-bit A/D conversion result register (ADCR) to 512 bytes of FFCE0H to FFEDFH of RAM.

Remark IFC13 to IFC10: Bits 3 to 0 of DMA mode control registers 1 (DMC1)

Figure 18-8. Example of Setting of Consecutively Capturing A/D Conversion Results

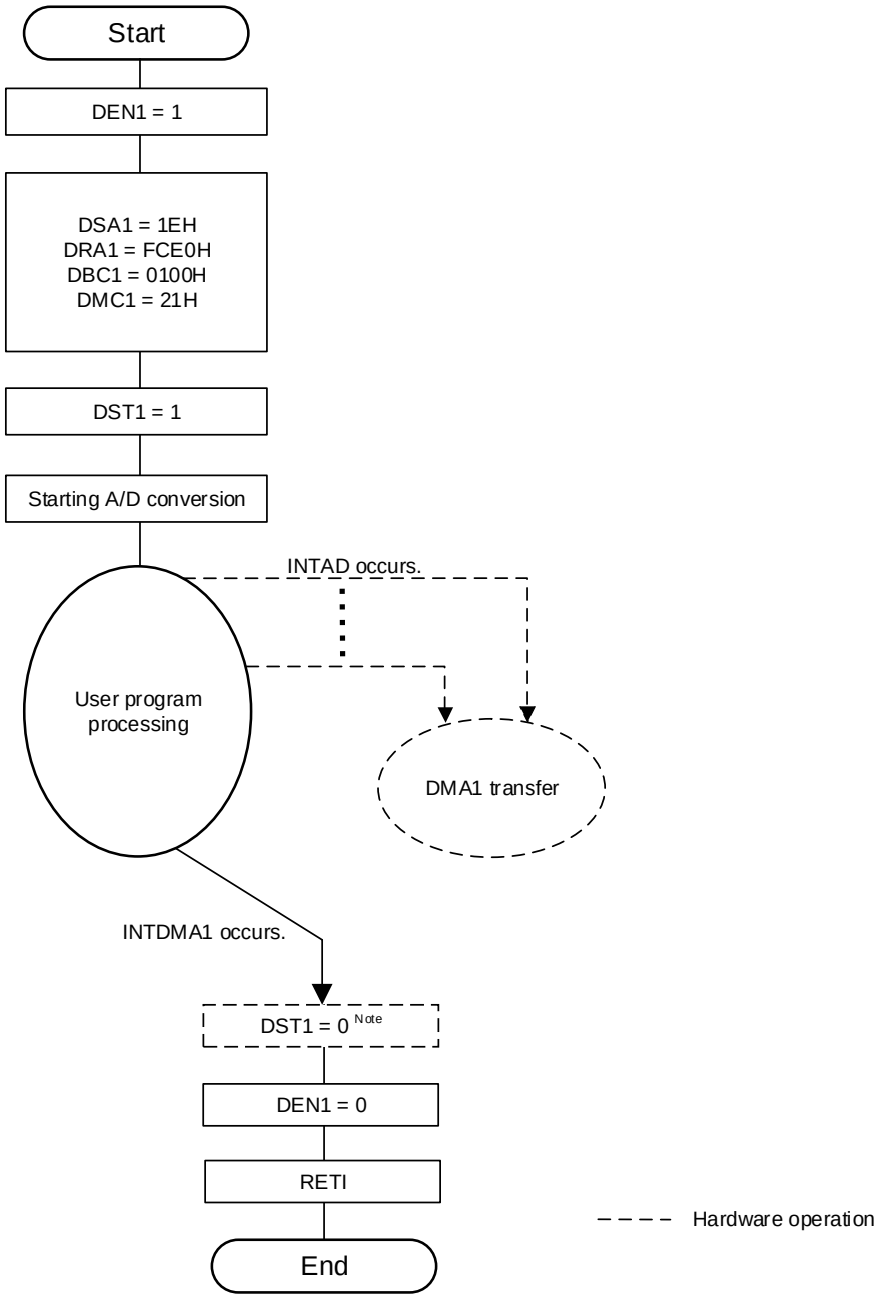

Note The DST1 flag is automatically cleared to 0 when a DMA transfer is completed.
Writing the DEN1 flag is enabled only when DST1 = 0. To terminate a DMA transfer without waiting for occurrence of the interrupt of DMA1 (INTDMA1), set the DST1 bit to 0 and then the DEN1 bit to 0 (for details, see **18.5.5 Forced termination by software**).

18.5.3 UART consecutive reception + ACK transmission

A flowchart illustrating an example of setting for UART consecutive reception + ACK transmission is shown below.

- Consecutively receives data from UART0 and outputs ACK to P10 on completion of reception.
- DMA channel 0 is used for DMA transfer.
- DMA start source: Software trigger (DMA transfer on occurrence of an interrupt is disabled.)
- Transfers FFF12H of UART receive data register 0 (RXD0) to 64 bytes of FFE00H to FFE3FH of RAM.

Figure 18-9. Example of Setting for UART Consecutive Reception + ACK Transmission

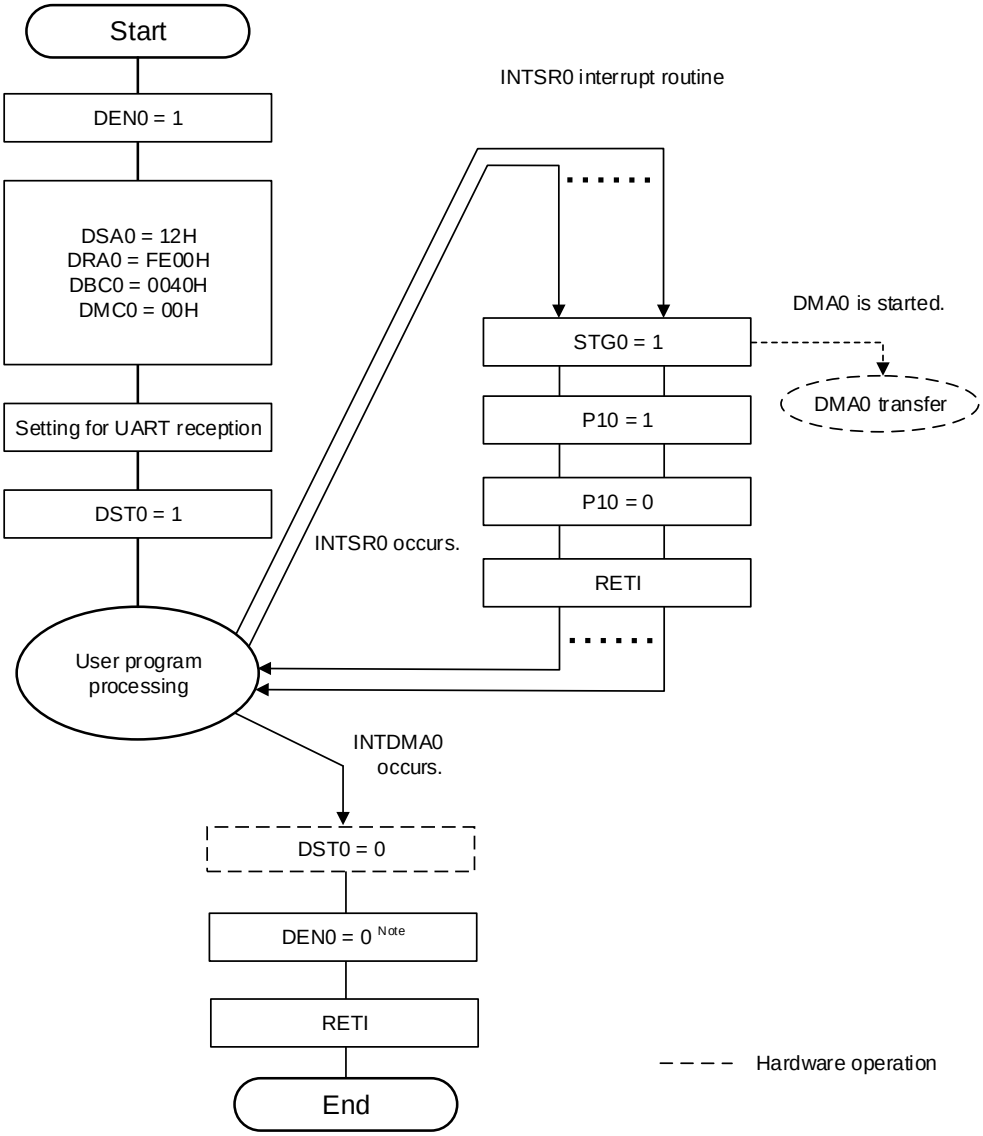

Note The DST0 flag is automatically cleared to 0 when a DMA transfer is completed.
Writing the DEN0 flag is enabled only when DST0 = 0. To terminate a DMA transfer without waiting for occurrence of the interrupt of DMA0 (INTDMA0), set the DST0 bit to 0 and then the DEN0 bit to 0 (for details, see **18.5.5 Forced termination by software**).

Remark This is an example where a software trigger is used as a DMA start source.
If ACK is not transmitted and if only data is consecutively received from UART, the UART reception end interrupt (INTSR0) can be used to start DMA for data reception.

18.5.4 Holding DMA transfer pending by DWAITn bit

When DMA transfer is started, transfer is performed while an instruction is executed. At this time, the operation of the CPU is stopped and delayed for the duration of 2 clocks. If this poses a problem to the operation of the set system, a DMA transfer can be held pending by setting the DWAITn bit to 1. The DMA transfer for a transfer trigger that occurred while DMA transfer was held pending is executed after the pending status is canceled. However, because only one transfer trigger can be held pending for each channel, even if multiple transfer triggers occur for one channel during the pending status, only one DMA transfer is executed after the pending status is canceled.

To output a pulse with a width of 10 clocks of the operating frequency from the P10 pin, for example, the clock width increases to 12 if a DMA transfer is started midway. In this case, the DMA transfer can be held pending by setting the DWAITn bit to 1.

After setting the DWAITn bit to 1, it takes two clocks until a DMA transfer is held pending.

Figure 18-10. Example of Setting for Holding DMA Transfer Pending by DWAITn Bit

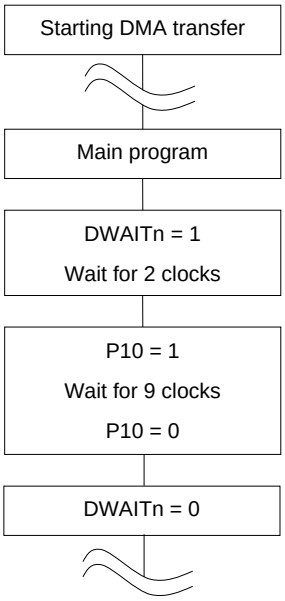

Caution When DMA transfer is held pending while using two or more DMA channels, be sure to held the DMA transfer pending for all channels (by setting DWAIT0, DWAIT1, DWAIT2, and DWAIT3 to 1). If the DMA transfer of one channel is executed while that of the other channel is held pending, DMA transfer might not be held pending for the latter channel.

Remarks 1. n: DMA channel number (n = 0 to 3)

2. 1 clock: $1/f_{CLK}$ (f_{CLK}: CPU clock)

18.5.5 Forced termination by software

After the DSTn bit is set to 0 by software, it takes up to 2 clocks until a DMA transfer is actually stopped and the DSTn bit is set to 0. To forcibly terminate a DMA transfer by software without waiting for occurrence of the interrupt (INTDMAn) of DMAn, therefore, perform either of the following processes.

<When using one DMA channel>

- Set the DSTn bit to 0 (use DRCn = 80H to write with an 8-bit manipulation instruction) by software, confirm by polling that the DSTn bit has actually been cleared to 0, and then set the DENn bit to 0 (use DRCn = 00H to write with an 8-bit manipulation instruction).

- Set the DSTn bit to 0 (use DRCn = 80H to write with an 8-bit manipulation instruction) by software and then set the DENn bit to 0 (use DRCn = 00H to write with an 8-bit manipulation instruction) two or more clocks after.

<When using two or more DMA channels>

- To forcibly terminate DMA transfer by software when using two or more DMA channels (by setting DSTn to 0), clear the DSTn bit to 0 after the DMA transfer is held pending by setting the DWAITn bits of all using channels to 1. Next, clear the DWAITn bits of all using channels to 0 to cancel the pending status, and then clear the DENn bit to 0.

Figure 18-11. Forced Termination of DMA Transfer (1/2)

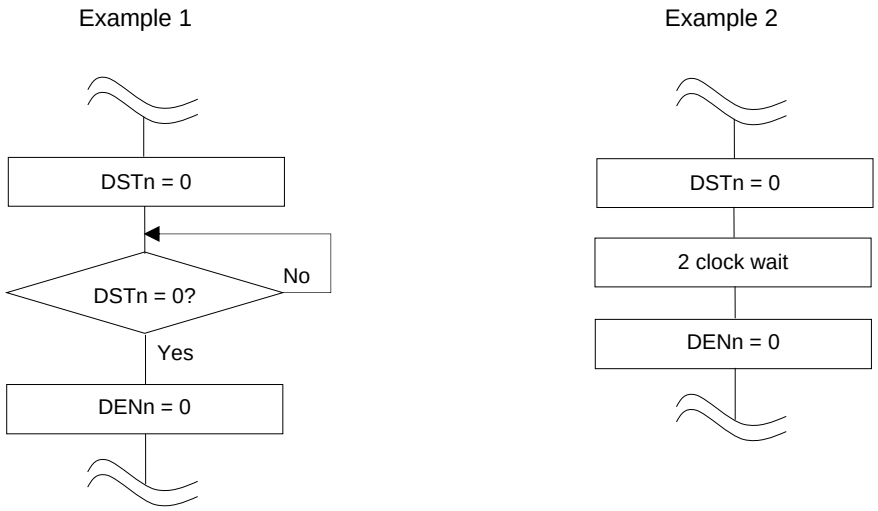

Remarks 1. n: DMA channel number (n = 0 to 3)

2. 1 clock: $1/f_{CLK}$ (f_{CLK}: CPU clock)

Figure 18-11. Forced Termination of DMA Transfer (2/2)

Example 3

- Procedure for forcibly terminating the DMA transfer for one channel if both channels are used

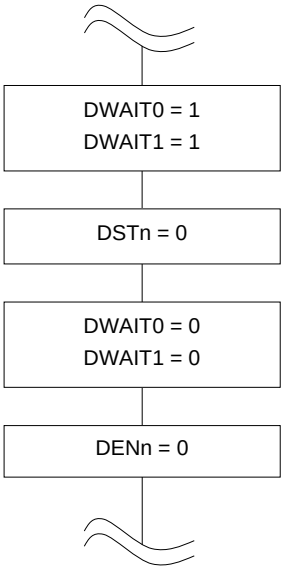

- Procedure for forcibly terminating the DMA transfer for both channels if both channels are used

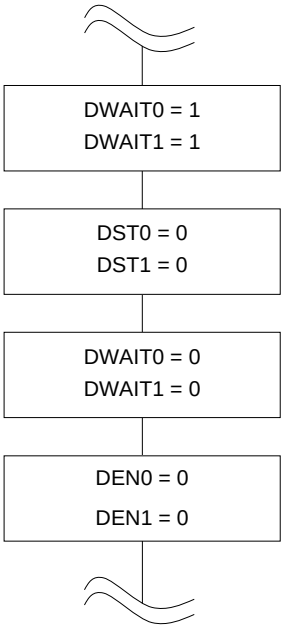

Caution **In example 3, the system is not required to wait two clock cycles after the DWAITn bit is set to 1. In addition, the system does not have to wait two clock cycles after clearing the DSTn bit to 0, because more than two clock cycles elapse from when the DSTn bit is cleared to 0 to when the DENn bit is cleared to 0.**

Remarks **1.** n: DMA channel number (n = 0, 1)

2. 1 clock: $1/f_{CLK}$ (f_{CLK}: CPU clock)

18.6 Cautions on Using DMA Controller

(1) Priority of DMA

During DMA transfer, a request from the other DMA channel is held pending even if generated. The pending DMA transfer is started after the ongoing DMA transfer is completed. If two or more DMA requests are generated at the same time, however, their priority are DMA channel 0 > DMA channel 1 > DMA channel 2 > DMA channel 3. If a DMA request and an interrupt request are generated at the same time, the DMA transfer takes precedence, and then interrupt servicing is executed.

(2) DMA response time

The response time of DMA transfer is as follows.

Table 18-3. Response Time of DMA Transfer

	Minimum Time	Maximum Time
Response time	3 clocks	10 clocks[Note]

Note The maximum time necessary to execute an instruction from internal RAM is 16 clock cycles.

Cautions 1. The above response time does not include the two clock cycles required for a DMA transfer.

2. When executing a DMA pending instruction (see 18.6 (4)), the maximum response time is extended by the execution time of that instruction to be held pending.

3. Do not specify successive transfer triggers for a channel within a period equal to the maximum response time plus one clock cycle, because they might be ignored.

Remark 1 clock: $1/f_{CLK}$ (f_{CLK}: CPU clock)

(3) Operation in standby mode

The DMA controller operates as follows in the standby mode.

Table 18-4. DMA Operation in Standby Mode

Status	DMA Operation
HALT mode	Normal operation
STOP mode	Stops operation. If DMA transfer and STOP instruction execution contend, DMA transfer may be damaged. Therefore, stop DMA before executing the STOP instruction.

(4) DMA pending instruction

Even if a DMA request is generated, DMA transfer is held pending immediately after the following instructions.

- CALL !addr16
- CALL $!addr20
- CALL !!addr20
- CALL rp
- CALLT [addr5]
- BRK
- MOV PSW, #byte
- MOV PSW, A
- MOV1 PSW. bit, CY
- SET1 PSW. bit
- CLR1 PSW. bit
- POP PSW
- BTCLR PSW. bit, $addr20
- EI
- DI
- Write instructions for registers IF0L, IF0H, IF1L, IF1H, IF2L, IF2H, IF3L, MK0L, MK0H, MK1L, MK1H, MK2L, MK2H, MK3L, PR00L, PR00H, PR01L, PR01H, PR02L, PR02H, PR03L, PR10L, PR10H, PR11L, PR11H, PR12L, PR12H, and PR13L each.
- Instruction for accessing the data flash memory

(5) Operation if address in general-purpose register area or other than those of internal RAM area is specified

The address indicated by DMA RAM address register n (DRAn) is incremented during DMA transfer. If the address is incremented to an address in the general-purpose register area or exceeds the area of the internal RAM, the following operation is performed.

- In mode of transfer from SFR to RAM
  The data of that address is lost.

- In mode of transfer from RAM to SFR
  Undefined data is transferred to SFR.

In either case, malfunctioning may occur or damage may be done to the system. Therefore, make sure that the address is within the internal RAM area other than the general-purpose register area.

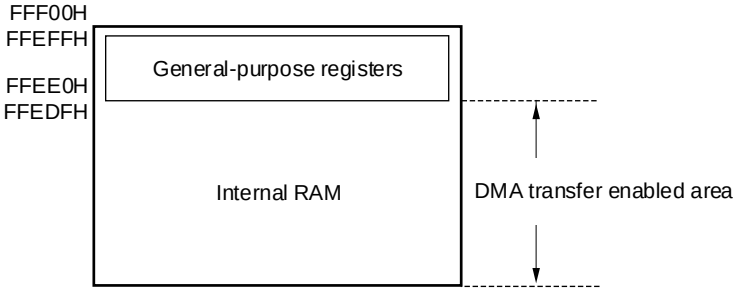

(6) Operation if instructions for accessing the data flash area

- If the data flash area is accessed one instruction execution after start of DMA transfer, a 3-clock wait will be inserted to the next instruction.

```
Instruction 1
DMA transfer
Instruction 2  ◄- The wait of three clock cycles occurs.
MOV A,         ! DataFlash area
```

CHAPTER 19 INTERRUPT FUNCTIONS

The interrupt function switches the program execution to other processing. When the branch processing is finished, the program returns to the interrupted processing.

The number of interrupt sources differs, depending on the product.

		64-pin	80-pin
Maskable interrupts	External	11	
	Internal	32	35

19.1 Interrupt Function Types

The following two types of interrupt functions are used.

(1) Maskable interrupts

These interrupts undergo mask control. Maskable interrupts can be divided into four priority groups by setting the priority specification flag registers (PR00L, PR00H, PR01L, PR01H, PR02L, PR02H, PR03L, PR10L, PR10H, PR11L, PR11H, PR12L, PR12H, PR13L).

Multiple interrupt servicing can be applied to low-priority interrupts when high-priority interrupts are generated. If two or more interrupt requests, each having the same priority, are simultaneously generated, then they are processed according to the default priority of vectored interrupt servicing. Default priority, see **Table 19-1**.

A standby release signal is generated and STOP, HALT, and SNOOZE modes are released.

External interrupt requests and internal interrupt requests are provided as maskable interrupts.

(2) Software interrupt

This is a vectored interrupt generated by executing the BRK instruction. It is acknowledged even when interrupts are disabled. The software interrupt does not undergo interrupt priority control.

19.2 Interrupt Sources and Configuration

Interrupt sources include maskable interrupts and software interrupts. In addition, they also have up to seven reset sources (see **Table 19-1**). The vector codes that store the program start address when branching due to the generation of a reset or various interrupt requests are two bytes each, so interrupts jump to a 64 K address of 00000H to 0FFFFH.

Table 19-1. Interrupt Source List (1/3)

Interrupt Type	Default Priority[Note 1]	Interrupt Source		Internal/ External	Vector Table Address	Basic Configuration Type[Note 2]	80-pin	64-pin
		Name	Trigger					
Maskable	0	INTWDTI	Watchdog timer interval[Note 3] (75% of overflow time+1/2f_{IL})	Internal	00004H	(A)	√	√
	1	INTLVI	Voltage detection[Note 4]		00006H		√	√
	2	INTP0	Pin input edge detection	External	00008H	(B)	√	√
	3	INTP1			0000AH		√	√
	4	INTP2			0000CH		√	√
	5	INTP3			0000EH		√	√
	6	INTP4			00010H		√	√
	7	INTP5			00012H		√	√
	8	INTST2	UART2 transmission transfer end or buffer empty interrupt	Internal	00014H	(A)	√	√
	9	INTSR2/ INTCSI21/ INTIIC21	UART2 reception transfer end/CSI21 transfer end or buffer empty interrupt/IIC21 transfer end		00016H		√	√
	10	INTSRE2	UART2 reception communication error occurrence		00018H		√	√
	11	INTDMA0	End of DMA0 transfer		0001AH		√	√
	12	INTDMA1	End of DMA1 transfer		0001CH		√	√
	13	INTST0/ INTCSI00/ INTIIC00	UART0 transmission transfer end or buffer empty interrupt/CSI00 transfer end or buffer empty interrupt/IIC00 transfer end		0001EH		√	√
	14	INTTM00	End of timer channel 00 count or capture		00020H		√	√
	15	INTSR0	UART0 reception transfer end		00022H		√	√
	16	INTSRE0	UART0 reception communication error occurrence		00024H		√	√
		INTTM01H	End of timer channel 01 count or capture (at higher 8-bit timer operation)				√	√
	17	INTST1/ INTCSI10/ INTIIC10	UART1 transmission transfer end or buffer empty interrupt/CSI10 transfer end or buffer empty interrupt/IIC10 transfer end		00026H		√	√
	18	INTSR1	UART1 reception transfer end		00028H		√	√
	19	INTSRE1	UART1 reception communication error occurrence		0002AH		√	√
		INTTM03H	End of timer channel 03 count or capture (at higher 8-bit timer operation)				√	√
	20	INTIICA0	End of IICA0 communication		0002CH		√	√
	21	INTRTIT	RTC2 correction timing		0002EH		√	√
	22	INTTM01	End of timer channel 01 count or capture (at 16-bit/lower 8-bit timer operation)		00032H		√	√

Notes 1. The default priority determines the sequence of interrupts if two or more maskable interrupts occur simultaneously. Zero indicates the highest priority and 44 indicates the lowest priority.

2. Basic configuration types (A) to (D) correspond to (A) to (D) in Figure 19-1.

3. When bit 7 (WDTINT) of the option byte (000C0H) is set to 1.

4. When bit 7 (LVIMD) of the voltage detection level register (LVIS) is cleared to 0.

Table 19-1. Interrupt Source List (2/3)

Interrupt Type	Default Priority[Note 1]	Interrupt Source		Internal/ External	Vector Table Address	Basic Configuration Type[Note 2]	80-pin	64-pin
		Name	Trigger					
Maskable	23	INTTM02	End of timer channel 02 count or capture	Internal	00034H	(A)	√	√
	24	INTTM03	End of timer channel 03 count or capture (at 16-bit/lower 8-bit timer operation)		00036H		√	√
	25	INTAD	End of A/D conversion		00038H		√	√
	26	INTRTC	Fixed-cycle signal of real-time clock 2/alarm match detection		0003AH		√	√
	27	INTIT	Interval signal of 12-bit interval timer detection		0003CH		√	√
	28	INTKR	Key return signal detection	External	0003EH	(C)	√	√
	29	INTST3	UART3 transmission transfer end or buffer empty interrupt	Internal	00040H	(A)	√	–
	30	INTSR3	UART3 reception transfer end		00042H		√	–
	31	INTTKB20	End of timer KB20 count		00044H		√	√
	32	INTTM04	End of timer channel 04 count or capture		00046H		√	√
	33	INTTM05	End of timer channel 05 count or capture		00048H		√	√
	34	INTP6	Pin input edge detection	External	0004AH	(B)	√	√
	35	INTP7			0004CH		√	√
	36	INTCMP0	Comparator detection 0		00050H		√	√
	37	INTCMP1	Comparator detection 1		00052H		√	√
	38	INTTM06	End of timer channel 06 count or capture	Internal	00054H	(A)	√	√
	39	INTTM07	End of timer channel 07 count or capture		00056H		√	√
	40	INTSRE3	UART3 reception communication error occurrence		0005CH		√	–
	41	INTMD	End of division operation/overflow occur		0005EH		√	√
	42	INTFL	Reserved[Note 3]		00062H		√	√
	43	INTDMA2	End of DMA2 transfer		00064H		√	√
	44	INTDMA3	End of DMA3 transfer		00066H		√	√

Notes 1. The default priority determines the sequence of interrupts if two or more maskable interrupts occur simultaneously. Zero indicates the highest priority and 44 indicates the lowest priority.

2. Basic configuration types (A) to (D) correspond to (A) to (D) in Figure 19-1.

3. Be used at the flash self programming library or the data flash library.

Table 19-1. Interrupt Source List (3/3)

Interrupt Type	Default Priority[Note 1]	Interrupt Source		Internal/ External	Vector Table Address	Basic Configuration Type[Note 2]	80-pin	64-pin
Software	–	BRK	Execution of BRK instruction	–	0007EH	(D)	√	√
Reset	–	RESET	$\overline{\text{RESET}}$ pin input	–	00000H	–	√	√
		POR	Power-on-reset				√	√
		LVD	Voltage detection[Note 3]				√	√
		WDT	Overflow of watchdog timer				√	√
		TRAP	Execution of illegal instruction[Note 4]				√	√
		IAW	Illegal-memory access				√	√
		RPE	RAM parity error				√	√

Notes 1. The default priority determines the sequence of interrupts if two or more maskable interrupts occur simultaneously. Zero indicates the highest priority and 44 indicates the lowest priority.

2. Basic configuration types (A) to (D) correspond to (A) to (D) in Figure 19-1.

3. When bit 7 (LVIMD) of the voltage detection level register (LVIS) is set to 1.

4. When the instruction code in FFH is executed.
Reset by the illegal instruction execution not issued by emulation with the in-circuit emulator or on-chip debug emulator.

Figure 19-1. Basic Configuration of Interrupt Function (1/2)

(A) Internal maskable interrupt

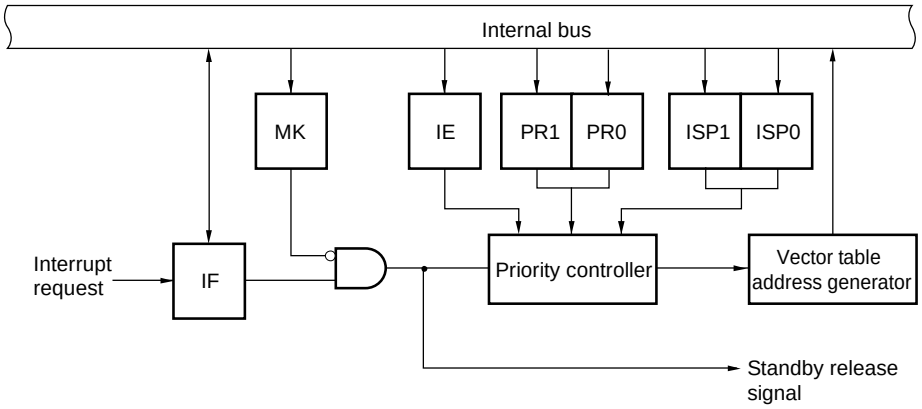

(B) External maskable interrupt (INTPn)

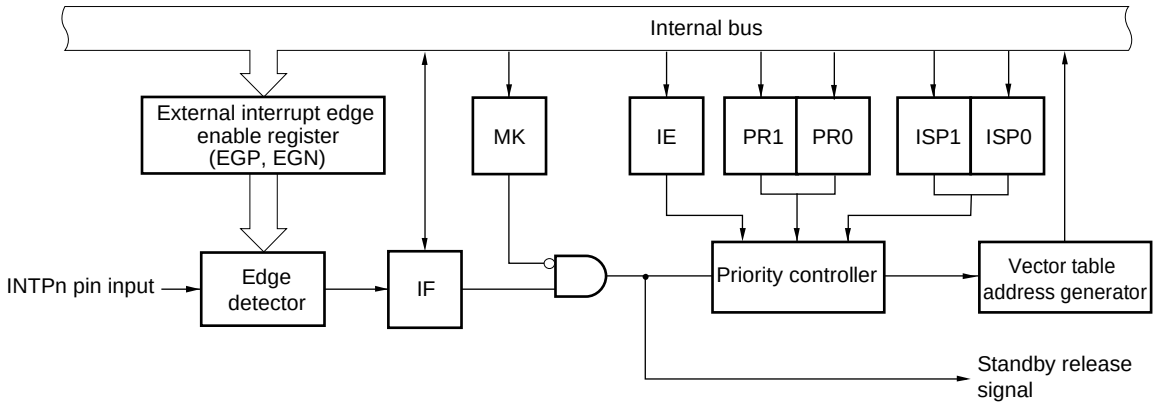

IF: Interrupt request flag
IE: Interrupt enable flag
ISP0: In-service priority flag 0
ISP1: In-service priority flag 1
MK: Interrupt mask flag
PR0: Priority specification flag 0
PR1: Priority specification flag 1

Remark n = 0 to 7

Figure 19-1. Basic Configuration of Interrupt Function (2/2)

(C) External maskable interrupt (INTKR)

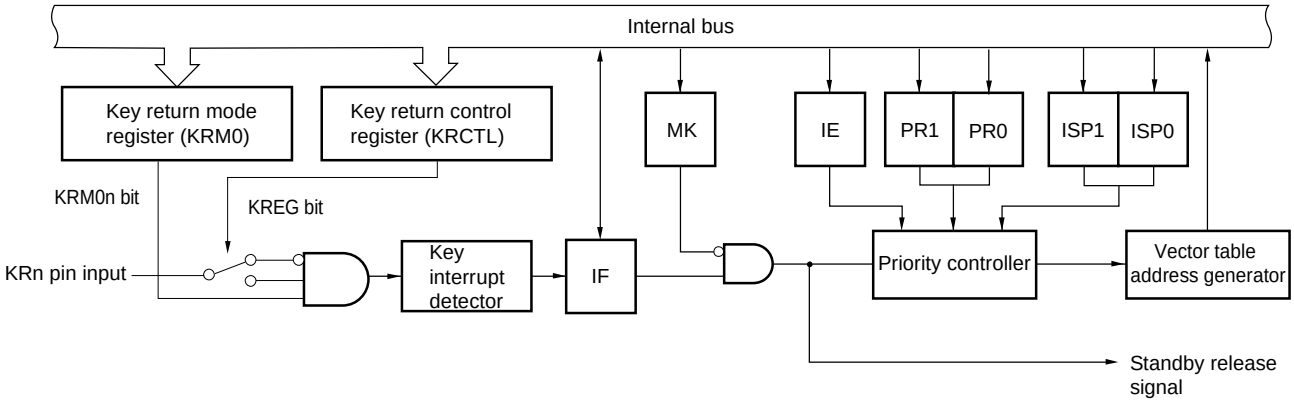

(D) Software interrupt

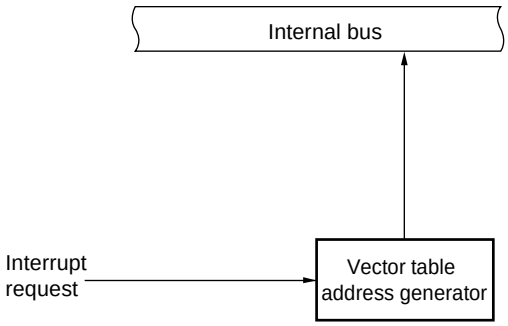

IF: Interrupt request flag
IE: Interrupt enable flag
ISP0: In-service priority flag 0
ISP1: In-service priority flag 1
MK: Interrupt mask flag
PR0: Priority specification flag 0
PR1: Priority specification flag 1

Remark 64-pin: n = 0 to 4, 7
80-pin: n = 0 to 7

19.3 Registers Controlling Interrupt Functions

The following 6 types of registers are used to control the interrupt functions.

- Interrupt request flag registers (IF0L, IF0H, IF1L, IF1H, IF2L, IF2H, IF3L)
- Interrupt mask flag registers (MK0L, MK0H, MK1L, MK1H, MK2L, MK2H, MK3L)
- Priority specification flag registers (PR00L, PR00H, PR01L, PR01H, PR02L, PR02H, PR03L, PR10L, PR10H, PR11L, PR11H, PR12L, PR12H, PR13L)
- External interrupt rising edge enable register (EGP0)
- External interrupt falling edge enable register (EGN0)
- Program status word (PSW)

Table 19-2 shows a list of interrupt request flags, interrupt mask flags, and priority specification flags corresponding to interrupt request sources.

Table 19-2. Flags Corresponding to Interrupt Request Sources (1/3)

Interrupt Source	Interrupt Request Flag		Interrupt Mask Flag		Priority Specification Flag		80-pin	64-pin
		Register		Register		Register		
INTWDTI	WDTIIF	IF0L	WDTIMK	MK0L	WDTIPR0, WDTIPR1	PR00L, PR10L	√	√
INTLVI	LVIIF		LVIMK		LVIPR0, LVIPR1		√	√
INTP0	PIF0		PMK0		PPR00, PPR10		√	√
INTP1	PIF1		PMK1		PPR01, PPR11		√	√
INTP2	PIF2		PMK2		PPR02, PPR12		√	√
INTP3	PIF3		PMK3		PPR03, PPR13		√	√
INTP4	PIF4		PMK4		PPR04, PPR14		√	√
INTP5	PIF5		PMK5		PPR05, PPR15		√	√
INTST2	STIF2	IF0H	STMK2	MK0H	STPR02, STPR12	PR00H, PR10H	√	√
INTSR2	SRIF2		SRMK2		SRPR02, SRPR12		√	√
INTSRE2	SREIF2		SREMK2		SREPR02, SREPR12		√	√
INTDMA0	DMAIF0		DMAMK0		DMAPR00, DMAPR10		√	√
INTDMA1	DMAIF1		DMAMK1		DMAPR01, DMAPR11		√	√
INTST0[Note]	STIF0[Note]		STMK0[Note]		STPR00, STPR10[Note]		√	√
INTCSI00[Note]	CSIIF00[Note]		CSIMK00[Note]		CSIPR000, CSIPR100[Note]		√	√
INTIIC00[Note]	IICIF00[Note]		IICMK00[Note]		IICPR000, IICPR100[Note]		√	√
INTTM00	TMIF00		TMMK00		TMPR000, TMPR100		√	√
INTSR0	SRIF0		SRMK0		SRPR00, SRPR10		√	√

Note If one of the interrupt sources INTST0, INTCSI00, and INTIIC00 is generated, bit 5 of the IF0H register is set to 1. Bit 5 of the MK0H, PR00H, and PR10H registers supports these three interrupt sources.

Table 19-2. Flags Corresponding to Interrupt Request Sources (2/3)

Interrupt Source	Interrupt Request Flag	Register	Interrupt Mask Flag	Register	Priority Specification Flag	Register	80-pin	64-pin
INTSRE0[Note 1]	SREIF0[Note 1]	IF1L	SREMK0[Note 1]	MK1L	SREPR00, SREPR10[Note 1]	PR01L, PR11L	√	√
INTTM01H[Note 1]	TMIF01H[Note 1]		TMMK01H[Note 1]		TMPR001H, TMPR101H[Note 1]		√	√
INTST1[Note 2]	STIF1[Note 2]		STMK1[Note 2]		STPR01, STPR11[Note 2]		√	√
INTCSI10[Note 2]	CSIIF10[Note 2]		CSIMK10[Note 2]		CSIPR010, CSIPR110[Note 2]		√	√
INTIIC10[Note 2]	IICIF10[Note 2]		IICMK10[Note 2]		IICPR010, IICPR110[Note 2]		√	√
INTSR1	SRIF1		SRMK1		SRPR01, SRPR11		√	√
INTSRE1[Note 3]	SREIF1[Note 3]		SREMK1[Note 3]		SREPR01, SREPR11[Note 3]		√	√
INTTM03H[Note 3]	TMIF03H[Note 3]		TMMK03H[Note 3]		TMPR003H, TMPR103H[Note 3]		√	√
INTIICA0	IICAIF0		IICAMK0		IICAPR00, IICAPR10		√	√
INTRTIT	RTITIF		RTITMK		RTITPR0, RTITPR1		√	√
INTTM01	TMIF01		TMMK01		TMPR001, TMPR101		√	√
INTTM02	TMIF02	IF1H	TMMK02	MK1H	TMPR002, TMPR102	PR01H, PR11H	√	√
INTTM03	TMIF03		TMMK03		TMPR003, TMPR103		√	√
INTAD	ADIF		ADMK		ADPR0, ADPR1		√	√
INTRTC	RTCIF		RTCMK		RTCPR0, RTCPR1		√	√
INTIT	TMKAIF		TMKAMK		TMKAPR0, TMKAPR1		√	√
INTKR	KRIF		KRMK		KRPR0, KRPR1		√	√
INTST3	STIF3		STMK3		STPR03, STPR13		√	–
INTSR3	SRIF3		SRMK3		SRPR03, SRPR13		√	–
INTTKB20	TKBIF20	IF2L	TKBMK20	MK2L	TKBPR020, TKBPR120	PR02L, PR12L	√	√
INTTM04	TMIF04		TMMK04		TMPR004, TMPR104		√	√
INTTM05	TMIF05		TMMK05		TMPR005, TMPR105		√	√
INTP6	PIF6		PMK6		PPR06, PPR16		√	√
INTP7	PIF7		PMK7		PPR07, PPR17		√	√
INTCMP0	CMPIF0		CMPMK0		CMPPR00, CMPPR10		√	√
INTCMP1	CMPIF1		CMPMK1		CMPPR01, CMPPR11		√	√

Notes 1. Do not use a UART0 reception error interrupt and an interrupt of channel 1 of TAU0 (at higher 8-bit timer operation) at the same time because they share flags for the interrupt request sources. If the UART0 reception error interrupt is not used (EOC01 = 0), UART0 and channel 1 of TAU0 (at higher 8-bit timer operation) can be used at the same time. If one of the interrupt sources INTSRE0 and INTTM01H is generated, bit 0 of the IF1L register is set to 1. Bit 0 of the MK1L, PR01L, and PR11L registers supports these two interrupt sources.

2. If one of the interrupt sources INTST1, INTCSI10, and INTIIC10 is generated, bit 1 of the IF1L register is set to 1. Bit 1 of the MK1L, PR01L, and PR11L registers supports these three interrupt sources.

3. Do not use a UART1 reception error interrupt and an interrupt of channel 3 of TAU0 (at higher 8-bit timer operation) at the same time because they share flags for the interrupt request sources. If the UART1 reception error interrupt is not used (EOC03 = 0), UART1 and channel 3 of TAU0 (at higher 8-bit timer operation) can be used at the same time. If one of the interrupt sources INTSRE1 and INTTM03H is generated, bit 3 of the IF1L register is set to 1. Bit 3 of the MK1L, PR01L, and PR11L registers supports these two interrupt sources.

Table 19-2. Flags Corresponding to Interrupt Request Sources (3/3)

Interrupt Source	Interrupt Request Flag		Interrupt Mask Flag		Priority Specification Flag		80-pin	64-pin
		Register		Register		Register		
INTTM06	TMIF06	IF2H	TMMK06	MK2H	TMPR006, TMPR106	PR02H, PR12H	√	√
INTTM07	TMIF07		TMMK07		TMPR007, TMPR107		√	√
INTSRE3	SREIF3		SREMK3		SREPR03, SREPR13		√	–
INTMD	MDIF		MDMK		MDPR0, MDPR1		√	√
INTFL	FLIF		FLMK		FLPR0, FLPR1		√	√
INTDMA2	DMAIF2	IF3L	DMAMK2	MK3L	DMAPR02, DMAPR12	PR03L, PR13L	√	√
INTDMA3	DMAIF3		DMAMK3		DMAPR03, DMAPR13		√	√

19.3.1 Interrupt request flag registers (IF0L, IF0H, IF1L, IF1H, IF2L, IF2H, IF3L)

The interrupt request flags are set to 1 when the corresponding interrupt request is generated or an instruction is executed. They are cleared to 0 when an instruction is executed upon acknowledgment of an interrupt request or upon reset signal generation.

When an interrupt is acknowledged, the interrupt request flag is automatically cleared and then the interrupt routine is entered.

The IF0L, IF0H, IF1L, IF1H, IF2L, IF2H, and IF3L registers can be set by a 1-bit or 8-bit memory manipulation instruction. When the IF0L and IF0H registers, the IF1L and IF1H registers, and the IF2L and IF2H registers are combined to form 16-bit registers IF0, IF1, and IF2, they can be set by a 16-bit memory manipulation instruction.

Reset signal generation clears these registers to 00H.

Remark If an instruction that writes data to this register is executed, the number of instruction execution clocks increases by 2 clocks.

Figure 19-2. Format of Interrupt Request Flag Registers (IF0L, IF0H, IF1L, IF1H, IF2L, IF2H, IF3L) (1/2)

Address: FFFE0H After reset: 00H R/W

Symbol	<7>	<6>	<5>	<4>	<3>	<2>	<1>	<0>
IF0L	PIF5	PIF4	PIF3	PIF2	PIF1	PIF0	LVIIF	WDTIIF

Address: FFFE1H After reset: 00H R/W

Symbol	<7>	<6>	<5>	<4>	<3>	<2>	<1>	<0>
IF0H	SRIF0	TMIF00	STIF0 CSIIF00 IICIF00	DMAIF1	DMAIF0	SREIF2	SRIF2	STIF2

Address: FFFE2H After reset: 00H R/W

Symbol	<7>	6	<5>	<4>	<3>	<2>	<1>	<0>
IF1L	TMIF01	0	RTITIF	IICAIF0	SREIF1 TMIF03H	SRIF1	STIF1 CSIIF10 IICIF10	SREIF0 TMIF01H

Address: FFFE3H After reset: 00H R/W

Symbol	<7>	<6>	<5>	<4>	<3>	<2>	<1>	<0>
IF1H	SRIF3	STIF3	KRIF	TMKAIF	RTCIF	ADIF	TMIF03	TMIF02

Address: FFFD0H After reset: 00H R/W

Symbol	<7>	<6>	5	<4>	<3>	<2>	<1>	<0>
IF2L	CMPIF1	CMPIF0	0	PIF7	PIF6	TMIF05	TMIF04	TKBIF20

Address: FFFD1H After reset: 00H R/W

Symbol	<7>	6	<5>	<4>	3	2	<1>	<0>
IF2H	FLIF	0	MDIF	SREIF3	0	0	TMIF07	TMIF06

Figure 19-2. Format of Interrupt Request Flag Registers (IF0L, IF0H, IF1L, IF1H, IF2L, IF2H, IF3L) (2/2)

Address: FFFD2H After reset: 00H R/W

Symbol	7	6	5	4	3	2	<1>	<0>
IF3L	0	0	0	0	0	0	DMAIF3	DMAIF2

XXIFX	Interrupt request flag
0	No interrupt request signal is generated
1	Interrupt request is generated, interrupt request status

Cautions 1. The available bits differ depending on the product. For details about the bits available for each product, see Table 19-2. Be sure to clear bits that are not available to 0.

2. When manipulating a flag of the interrupt request flag register, use a 1-bit memory manipulation instruction (CLR1). When describing in C language, use a bit manipulation instruction such as "IF0L.0 = 0;" or "_asm("clr1 IF0L.0");" because the compiled assembler must be a 1-bit memory manipulation instruction (CLR1).

If a program is described in C language using an 8-bit memory manipulation instruction such as "IF0L &= 0xfe;" and compiled, it becomes the assembler of three instructions.

```
mov a, IF0L
and a, #0FEH
mov IF0L, a
```

In this case, even if the request flag of the another bit of the same interrupt request flag register (IF0L) is set to 1 at the timing between "mov a, IF0L" and "mov IF0L, a", the flag is cleared to 0 at "mov IF0L, a". Therefore, care must be exercised when using an 8-bit memory manipulation instruction in C language.

19.3.2 Interrupt mask flag registers (MK0L, MK0H, MK1L, MK1H, MK2L, MK2H, MK3L)

The interrupt mask flags are used to enable/disable the corresponding maskable interrupt.

The MK0L, MK0H, MK1L, MK1H, MK2L, MK2H, and MK3L registers can be set by a 1-bit or 8-bit memory manipulation instruction. When the MK0L and MK0H registers, the MK1L and MK1H registers, and the MK2L and MK2H registers are combined to form 16-bit registers MK0, MK1, and MK2, they can be set by a 16-bit memory manipulation instruction.

Reset signal generation sets these registers to FFH.

Remark If an instruction that writes data to this register is executed, the number of instruction execution clocks increases by 2 clocks.

Figure 19-3. Format of Interrupt Mask Flag Registers (MK0L, MK0H, MK1L, MK1H, MK2L, MK2H, MK3L)

Address: FFFE4H After reset: FFH R/W

Symbol	<7>	<6>	<5>	<4>	<3>	<2>	<1>	<0>
MK0L	PMK5	PMK4	PMK3	PMK2	PMK1	PMK0	LVIMK	WDTIMK

Address: FFFE5H After reset: FFH R/W

Symbol	<7>	<6>	<5>	<4>	<3>	<2>	<1>	<0>
MK0H	SRMK0	TMMK00	STMK0 CSIMK00 IICMK00	DMAMK1	DMAMK0	SREMK2	SRMK2	STMK2

Address: FFFE6H After reset: FFH R/W

Symbol	<7>	6	<5>	<4>	<3>	<2>	<1>	<0>
MK1L	TMMK01	1	RTITMK	IICAMK0	SREMK1 TMMK03H	SRMK1	STMK1 CSIMK10 IICMK10	SREMK0 TMMK01H

Address: FFFE7H After reset: FFH R/W

Symbol	<7>	<6>	<5>	<4>	<3>	<2>	<1>	<0>
MK1H	SRMK3	STMK3	KRMK	TMKAMK	RTCMK	ADMK	TMMK03	TMMK02

Address: FFFD4H After reset: FFH R/W

Symbol	<7>	<6>	5	<4>	<3>	<2>	<1>	<0>
MK2L	CMPMK1	CMPMK0	1	PMK7	PMK6	TMMK05	TMMK04	TKBMK20

Address: FFFD5H After reset: FFH R/W

Symbol	<7>	6	<5>	<4>	3	2	<1>	<0>
MK2H	FLMK	1	MDMK	SREMK3	1	1	TMMK07	TMMK06

Address: FFFD6H After reset: FFH R/W

Symbol	7	6	5	4	3	2	<1>	<0>
MK3L	1	1	1	1	1	1	DMAMK3	DMAMK2

XXMKX	Interrupt servicing control
0	Interrupt servicing enabled
1	Interrupt servicing disabled

Caution The available bits differ depending on the product. For details about the bits available for each product, see Table 19-2. Be sure to set bits that are not available to 1.

19.3.3 Priority specification flag registers (PR00L, PR00H, PR01L, PR01H, PR02L, PR02H, PR03L, PR10L, PR10H, PR11L, PR11H, PR12L, PR12H, PR13L)

The priority specification flag registers are used to set the corresponding maskable interrupt priority level.

A priority level is set by using the PR0xy and PR1xy registers in combination (xy = 0L, 0H, 1L, 1H, 2L, 2H, or 3L).

The PR00L, PR00H, PR01L, PR01H, PR02L, PR02H, PR03L, PR10L, PR10H, PR11L, PR11H, PR12L, PR12H, and the PR13L registers can be set by a 1-bit or 8-bit memory manipulation instruction. If the PR00L and PR00H registers, the PR01L and PR01H registers, the PR02L and PR02H registers, the PR10L and PR10H registers, the PR11L and PR11H registers, and the PR12L and PR12H registers are combined to form 16-bit registers PR00, PR01, PR02, PR10, PR11, and PR12, they can be set by a 16-bit memory manipulation instruction.

Reset signal generation sets these registers to FFH.

Remark If an instruction that writes data to this register is executed, the number of instruction execution clocks increases by 2 clocks.

Figure 19-4. Format of Priority Specification Flag Registers (PR00L, PR00H, PR01L, PR01H, PR02L, PR02H, PR03L, PR10L, PR10H, PR11L, PR11H, PR12L, PR12H, PR13L) (1/2)

Address: FFFE8H After reset: FFH R/W

Symbol	<7>	<6>	<5>	<4>	<3>	<2>	<1>	<0>
PR00L	PPR05	PPR04	PPR03	PPR02	PPR01	PPR00	LVIPR0	WDTIPR0

Address: FFFECH After reset: FFH R/W

Symbol	<7>	<6>	<5>	<4>	<3>	<2>	<1>	<0>
PR10L	PPR15	PPR14	PPR13	PPR12	PPR11	PPR10	LVIPR1	WDTIPR1

Address: FFFE9H After reset: FFH R/W

Symbol	<7>	<6>	<5>	<4>	<3>	<2>	<1>	<0>
PR00H	SRPR00	TMPR000	STPR00 CSIPR000 IICPR000	DMAPR01	DMAPR00	SREPR02	SRPR02	STPR02

Address: FFFEDH After reset: FFH R/W

Symbol	<7>	<6>	<5>	<4>	<3>	<2>	<1>	<0>
PR10H	SRPR10	TMPR100	STPR10 CSIPR100 IICPR100	DMAPR11	DMAPR10	SREPR12	SRPR12	STPR12

Address: FFFEAH After reset: FFH R/W

Symbol	<7>	6	<5>	<4>	<3>	<2>	<1>	<0>
PR01L	TMPR001	1	RTITPR0	IICAPR00	SREPR01 TMPR003H	SRPR01	STPR01 CSIPR010 IICPR010	SREPR00 TMPR001H

Address: FFFEEH After reset: FFH R/W

Symbol	<7>	6	<5>	<4>	<3>	<2>	<1>	<0>
PR11L	TMPR101	1	RTITPR1	IICAPR10	SREPR11 TMPR103H	SRPR11	STPR11 CSIPR110 IICPR110	SREPR10 TMPR101H

Figure 19-4. Format of Priority Specification Flag Registers (PR00L, PR00H, PR01L, PR01H, PR02L, PR02H, PR03L, PR10L, PR10H, PR11L, PR11H, PR12L, PR12H, PR13L) (2/2)

Address: FFFEBH After reset: FFH R/W

Symbol	<7>	<6>	<5>	<4>	<3>	<2>	<1>	<0>
PR01H	SRPR03	STPR03	KRPR0	TMKAPR0	RTCPR0	ADPR0	TMPR003	TMPR002

Address: FFFEFH After reset: FFH R/W

Symbol	<7>	<6>	<5>	<4>	<3>	<2>	<1>	<0>
PR11H	SRPR13	STPR13	KRPR1	TMKAPR1	RTCPR1	ADPR1	TMPR103	TMPR102

Address: FFFD8H After reset: FFH R/W

Symbol	<7>	<6>	5	<4>	<3>	<2>	<1>	<0>
PR02L	CMPPR01	CMPPR00	1	PPR07	PPR06	TMPR005	TMPR004	TKBPR020

Address: FFFDCH After reset: FFH R/W

Symbol	<7>	<6>	5	<4>	<3>	<2>	<1>	<0>
PR12L	CMPPR11	CMPPR10	1	PPR17	PPR16	TMPR105	TMPR104	TKBPR120

Address: FFFD9H After reset: FFH R/W

Symbol	<7>	6	<5>	<4>	3	2	<1>	<0>
PR02H	FLPR0	1	MDPR0	SREPR03	1	1	TMPR007	TMPR006

Address: FFFDDH After reset: FFH R/W

Symbol	<7>	6	<5>	<4>	3	2	<1>	<0>
PR12H	FLPR1	1	MDPR1	SREPR13	1	1	TMPR107	TMPR106

Address: FFFDAH After reset: FFH R/W

Symbol	7	6	5	4	3	2	<1>	<0>
PR03L	1	1	1	1	1	1	DMAPR03	DMAPR02

Address: FFFDEH After reset: FFH R/W

Symbol	7	6	5	4	3	2	<1>	<0>
PR13L	1	1	1	1	1	1	DMAPR13	DMAPR12

XXPR1X	XXPR0X	Priority level selection
0	0	Specify level 0 (high priority level)
0	1	Specify level 1
1	0	Specify level 2
1	1	Specify level 3 (low priority level)

Caution The available bits differ depending on the product. For details about the bits available for each product, see Table 19-2. Be sure to set bits that are not available to 1.

19.3.4 External interrupt rising edge enable register (EGP0), external interrupt falling edge enable register (EGN0)

These registers specify the valid edge for INTP0 to INTP7.

The EGP0 and EGN0 registers can be set by a 1-bit or 8-bit memory manipulation instruction.

Reset signal generation clears these registers to 00H.

Figure 19-5. Format of External Interrupt Rising Edge Enable Register (EGP0) and External Interrupt Falling Edge Enable Register (EGN0)

Address: FFF38H After reset: 00H R/W

Symbol	7	6	5	4	3	2	1	0
EGP0	EGP7	EGP6	EGP5	EGP4	EGP3	EGP2	EGP1	EGP0

Address: FFF39H After reset: 00H R/W

Symbol	7	6	5	4	3	2	1	0
EGN0	EGN7	EGN6	EGN5	EGN4	EGN3	EGN2	EGN1	EGN0

EGPn	EGNn	INTPn pin valid edge selection (n = 0 to 7)
0	0	Edge detection disabled
0	1	Falling edge
1	0	Rising edge
1	1	Both rising and falling edges

Table 19-3 shows the ports corresponding to the EGPn and EGNn bits.

Table 19-3. Ports Corresponding to EGPn and EGNn bits

Detection Enable Bit		Interrupt Request Signal
EGP0	EGN0	INTP0
EGP1	EGN1	INTP1
EGP2	EGN2	INTP2
EGP3	EGN3	INTP3
EGP4	EGN4	INTP4
EGP5	EGN5	INTP5
EGP6	EGN6	INTP6
EGP7	EGN7	INTP7

Caution Select the port mode by clearing the EGPn and EGNn bits to 0 because an edge may be detected when the external interrupt function is switched to the port function.

Remarks 1. For edge detection port, see **2.1 Port Function.**

2. n = 0 to 7

19.3.5 Program status word (PSW)

The program status word is a register used to hold the instruction execution result and the current status for an interrupt request. The IE flag that sets maskable interrupt enable/disable and the ISP0 and ISP1 flags that controls multiple interrupt servicing are mapped to the PSW.

Besides 8-bit read/write, this register can carry out operations using bit manipulation instructions and dedicated instructions (EI and DI). When a vectored interrupt request is acknowledged, if the BRK instruction is executed, the contents of the PSW are automatically saved into a stack and the IE flag is reset to 0. Upon acknowledgment of a maskable interrupt request, if the value of the priority specification flag register of the acknowledged interrupt is not 00, its value minus 1 is transferred to the ISP0 and ISP1 flags. The PSW contents are also saved into the stack with the PUSH PSW instruction. They are restored from the stack with the RETI, RETB, and POP PSW instructions.

Reset signal generation sets PSW to 06H.

Figure 19-6. Configuration of Program Status Word

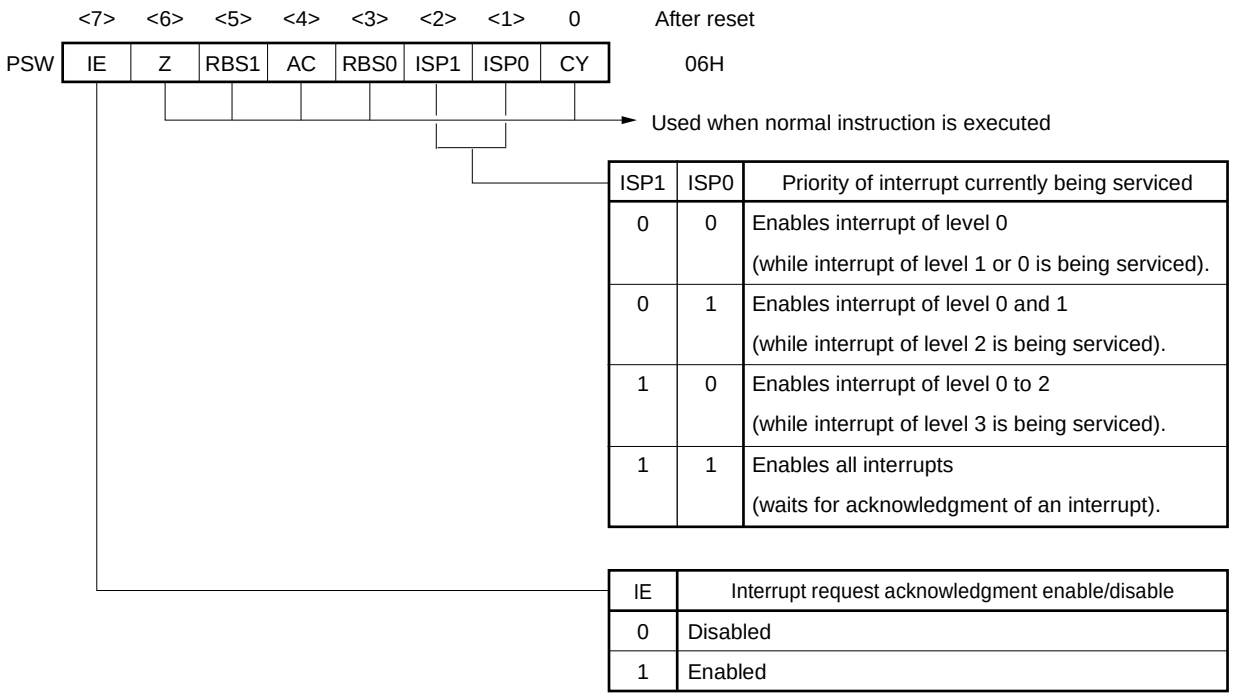

ISP1	ISP0	Priority of interrupt currently being serviced
0	0	Enables interrupt of level 0 (while interrupt of level 1 or 0 is being serviced).
0	1	Enables interrupt of level 0 and 1 (while interrupt of level 2 is being serviced).
1	0	Enables interrupt of level 0 to 2 (while interrupt of level 3 is being serviced).
1	1	Enables all interrupts (waits for acknowledgment of an interrupt).

IE	Interrupt request acknowledgment enable/disable
0	Disabled
1	Enabled

19.4 Interrupt Servicing Operations

19.4.1 Maskable interrupt request acknowledgment

A maskable interrupt request becomes acknowledgeable when the interrupt request flag is set to 1 and the mask (MK) flag corresponding to that interrupt request is cleared to 0. A vectored interrupt request is acknowledged if interrupts are in the interrupt enabled state (when the IE flag is set to 1). However, a low-priority interrupt request is not acknowledged during servicing of a higher priority interrupt request.

The times from generation of a maskable interrupt request until vectored interrupt servicing is performed are listed in Table 19-4 below.

For the interrupt request acknowledgment timing, see **Figures 19-8** and **19-9**.

Table 19-4. Time from Generation of Maskable Interrupt Until Servicing

	Minimum Time	Maximum Time[Note]
Servicing time	9 clocks	16 clocks

Note Maximum time does not apply when an instruction from the internal RAM area is executed.

Remark 1 clock: $1/f_{CLK}$ (f_{CLK}: CPU clock)

If two or more maskable interrupt requests are generated simultaneously, the request with a higher priority level specified in the priority specification flag is acknowledged first. If two or more interrupts requests have the same priority level, the request with the highest default priority is acknowledged first.

An interrupt request that is held pending is acknowledged when it becomes acknowledgeable.

Figure 19-7 shows the interrupt request acknowledgment algorithm.

If a maskable interrupt request is acknowledged, the contents are saved into the stacks in the order of PSW, then PC, the IE flag is reset (0), and the contents of the priority specification flag corresponding to the acknowledged interrupt are transferred to the ISP1 and ISP0 flags. The vector table data determined for each interrupt request is the loaded into the PC and branched.

Restoring from an interrupt is possible by using the RETI instruction.

Figure 19-7. Interrupt Request Acknowledgment Processing Algorithm

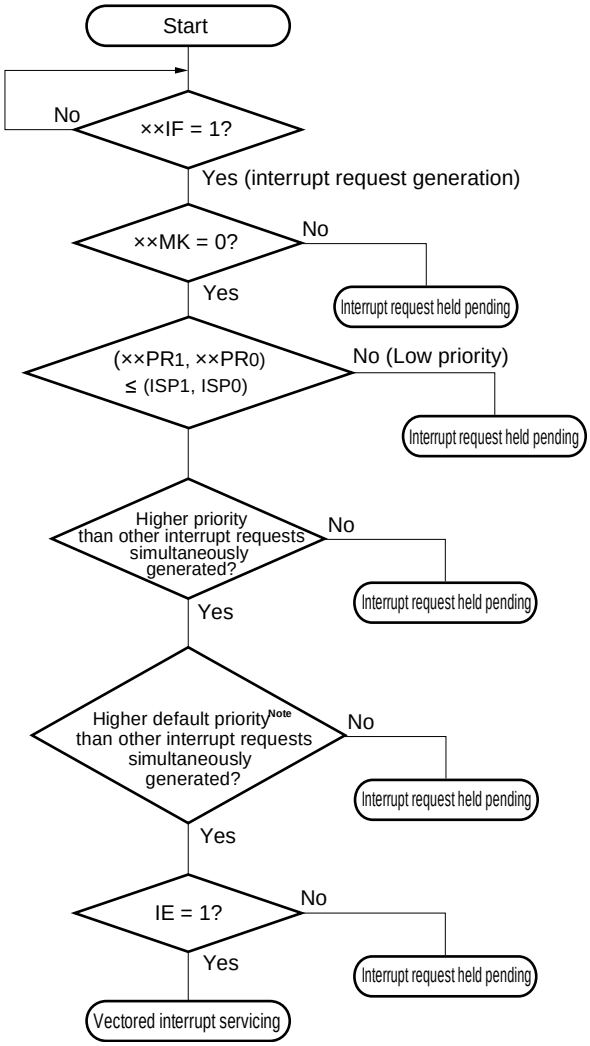

××IF:	Interrupt request flag
××MK:	Interrupt mask flag
××PR0:	Priority specification flag 0
××PR1:	Priority specification flag 1
IE:	Flag that controls acknowledgment of maskable interrupt request (1 = Enable, 0 = Disable)
ISP0, ISP1:	Flag that indicates the priority level of the interrupt currently being serviced (see **Figure 19-6**)

Note For the default priority, see **Table 19-1 Interrupt Source List**.

Figure 19-8. Interrupt Request Acknowledgment Timing (Minimum Time)

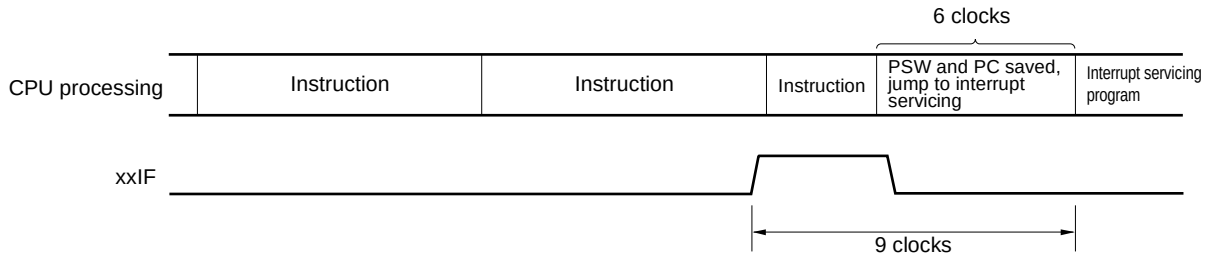

Remark 1 clock: 1/f_{CLK} (f_{CLK}: CPU clock)

Figure 19-9. Interrupt Request Acknowledgment Timing (Maximum Time)

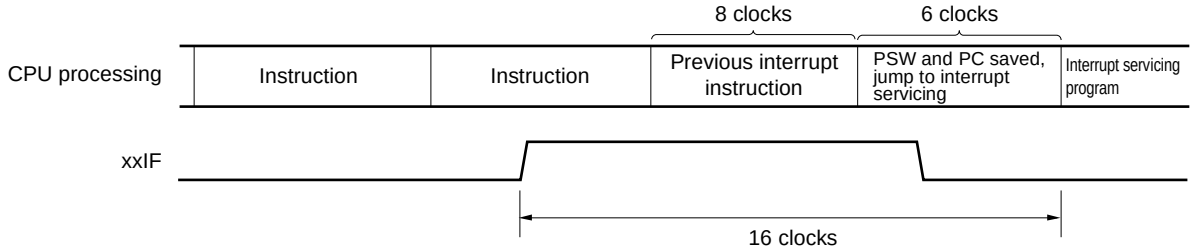

Remark 1 clock: 1/f_{CLK} (f_{CLK}: CPU clock)

19.4.2 Software interrupt request acknowledgment

A software interrupt request is acknowledged by BRK instruction execution. Software interrupts cannot be disabled.

If a software interrupt request is acknowledged, the contents are saved into the stacks in the order of the program status word (PSW), then program counter (PC), the IE flag is reset (0), and the contents of the vector table (0007EH, 0007FH) are loaded into the PC and branched.

Restoring from a software interrupt is possible by using the RETB instruction.

Caution Can not use the RETI instruction for restoring from the software interrupt.

19.4.3 Multiple interrupt servicing

Multiple interrupt servicing occurs when another interrupt request is acknowledged during execution of an interrupt.

Multiple interrupt servicing does not occur unless the interrupt request acknowledgment enabled state is selected (IE = 1). When an interrupt request is acknowledged, interrupt request acknowledgment becomes disabled (IE = 0). Therefore, to enable multiple interrupt servicing, it is necessary to set (1) the IE flag with the EI instruction during interrupt servicing to enable interrupt acknowledgment.

Moreover, even if interrupts are enabled, multiple interrupt servicing may not be enabled, this being subject to interrupt priority control. Two types of priority control are available: default priority control and programmable priority control. Programmable priority control is used for multiple interrupt servicing.

In the interrupt enabled state, if an interrupt request with a priority equal to or higher than that of the interrupt currently being serviced is generated, it is acknowledged for multiple interrupt servicing. If an interrupt with a priority lower than that of the interrupt currently being serviced is generated during interrupt servicing, it is not acknowledged for multiple interrupt servicing. However, when setting the IE flag to 1 during the interrupt at level 0, other level 0 interrupts can be allowed. Interrupt requests that are not enabled because interrupts are in the interrupt disabled state or because they have a lower priority are held pending. When servicing of the current interrupt ends, the pending interrupt request is acknowledged following execution of at least one main processing instruction execution.

Table 19-5 shows relationship between interrupt requests enabled for multiple interrupt servicing and Figure 19-10 shows multiple interrupt servicing examples.

Table 19-5. Relationship Between Interrupt Requests Enabled for Multiple Interrupt Servicing During Interrupt Servicing

Multiple Interrupt Request / Interrupt Being Serviced		Maskable Interrupt Request								Software Interrupt Request
		Priority Level 0 (PR = 00)		Priority Level 1 (PR = 01)		Priority Level 2 (PR = 10)		Priority Level 3 (PR = 11)		
		IE = 1	IE = 0	IE = 1	IE = 0	IE = 1	IE = 0	IE = 1	IE = 0	
Maskable interrupt	ISP1 = 0 ISP0 = 0	○	×	×	×	×	×	×	×	○
	ISP1 = 0 ISP0 = 1	○	×	○	×	×	×	×	×	○
	ISP1 = 1 ISP0 = 0	○	×	○	×	○	×	×	×	○
	ISP1 = 1 ISP0 = 1	○	×	○	×	○	×	○	×	○
Software interrupt		○	×	○	×	○	×	○	×	○

Remarks 1. ○: Multiple interrupt servicing enabled

2. ×: Multiple interrupt servicing disabled

3. ISP0, ISP1, and IE are flags contained in the PSW.

ISP1 = 0, ISP0 = 0: An interrupt of level 1 or level 0 is being serviced.

ISP1 = 0, ISP0 = 1: An interrupt of level 2 is being serviced.

ISP1 = 1, ISP0 = 0: An interrupt of level 3 is being serviced.

ISP1 = 1, ISP0 = 1: Wait for An interrupt acknowledgment (all interrupts are enabled).

IE = 0: Interrupt request acknowledgment is disabled.

IE = 1: Interrupt request acknowledgment is enabled.

4. PR is a flag contained in the PR00L, PR00H, PR01L, PR01H, PR02L, PR02H, PR03L, PR10L, PR10H, PR11L, PR11H, PR12L, PR12H, and PR13L registers.

PR = 00: Specify level 0 with ××PR1× = 0, ××PR0× = 0 (higher priority level)

PR = 01: Specify level 1 with ××PR1× = 0, ××PR0× = 1

PR = 10: Specify level 2 with ××PR1× = 1, ××PR0× = 0

PR = 11: Specify level 3 with ××PR1× = 1, ××PR0× = 1 (lower priority level)

Figure 19-10. Examples of Multiple Interrupt Servicing (1/2)

Example 1. Multiple interrupt servicing occurs twice

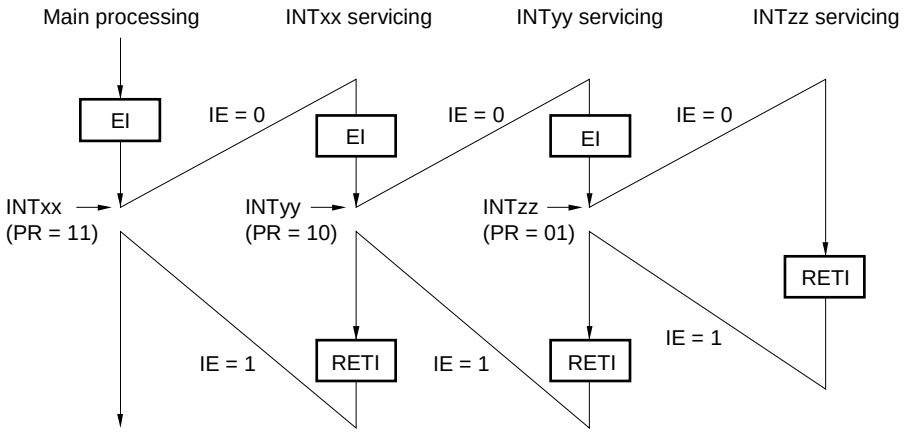

During servicing of interrupt INTxx, two interrupt requests, INTyy and INTzz, are acknowledged, and multiple interrupt servicing takes place. Before each interrupt request is acknowledged, the EI instruction must always be issued to enable interrupt request acknowledgment.

Example 2. Multiple interrupt servicing does not occur due to priority control

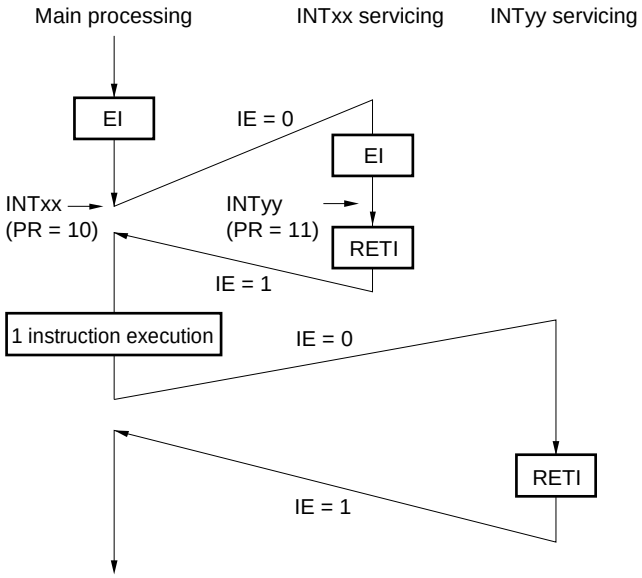

Interrupt request INTyy issued during servicing of interrupt INTxx is not acknowledged because its priority is lower than that of INTxx, and multiple interrupt servicing does not take place. The INTyy interrupt request is held pending, and is acknowledged following execution of one main processing instruction.

PR = 00: Specify level 0 with ××PR1× = 0, ××PR0× = 0 (higher priority level)
PR = 01: Specify level 1 with ××PR1× = 0, ××PR0× = 1
PR = 10: Specify level 2 with ××PR1× = 1, ××PR0× = 0
PR = 11: Specify level 3 with ××PR1× = 1, ××PR0× = 1 (lower priority level)
IE = 0: Interrupt request acknowledgment is disabled
IE = 1: Interrupt request acknowledgment is enabled.

Figure 19-10. Examples of Multiple Interrupt Servicing (2/2)

Example 3. Multiple interrupt servicing does not occur because interrupts are not enabled

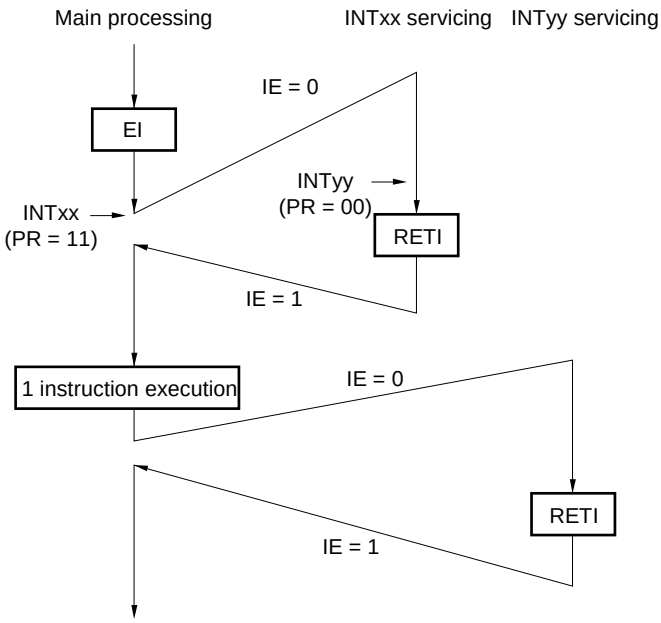

Interrupts are not enabled during servicing of interrupt INTxx (EI instruction is not issued), therefore, interrupt request INTyy is not acknowledged and multiple interrupt servicing does not take place. The INTyy interrupt request is held pending, and is acknowledged following execution of one main processing instruction.

PR = 00: Specify level 0 with ××PR1× = 0, ××PR0× = 0 (higher priority level)
PR = 01: Specify level 1 with ××PR1× = 0, ××PR0× = 1
PR = 10: Specify level 2 with ××PR1× = 1, ××PR0× = 0
PR = 11: Specify level 3 with ××PR1× = 1, ××PR0× = 1 (lower priority level)
IE = 0: Interrupt request acknowledgment is disabled
IE = 1: Interrupt request acknowledgment is enabled.

19.4.4 Interrupt request hold

There are instructions where, even if an interrupt request is issued while the instructions are being executed, interrupt request acknowledgment is held pending until the end of execution of the next instruction. These instructions (interrupt request hold instructions) are listed below.

- MOV PSW, #byte
- MOV PSW, A
- MOV1 PSW. bit, CY
- SET1 PSW. bit
- CLR1 PSW. bit
- RETB
- RETI
- POP PSW
- BTCLR PSW. bit, $addr20
- EI
- DI
- SKC
- SKNC
- SKZ
- SKNZ
- SKH
- SKNH
- MULHU
- MULH
- MACHU
- MACH
- Write instructions for the IF0L, IF0H, IF1L, IF1H, IF2L, IF2H, IF3L, MK0L, MK0H, MK1L, MK1H, MK2L, MK2H, MK3L, PR00L, PR00H, PR01L, PR01H, PR02L, PR02H, PR03L, PR10L, PR10H, PR11L, PR11H, PR12L, PR12H, and PR13L registers

Figure 19-11 shows the timing at which interrupt requests are held pending.

Figure 19-11. Interrupt Request Hold

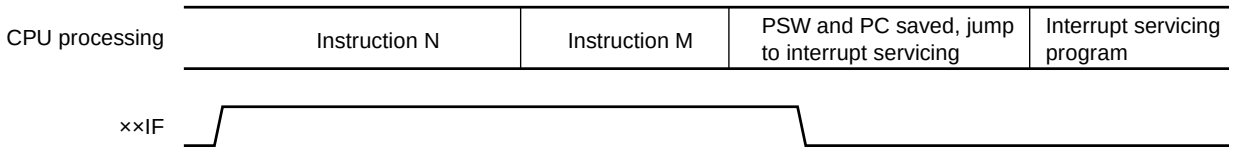

Remarks 1. Instruction N: Interrupt request hold instruction

2. Instruction M: Instruction other than interrupt request hold instruction

CHAPTER 20 KEY INTERRUPT FUNCTION

The number of key interrupt input channels differs, depending on the product.

	64-pin	80-pin
Key interrupt input channels	5 ch	8 ch

20.1 Functions of Key Interrupt

A key interrupt (INTKR) can be generated by inputting a rising edge/falling edge to the key interrupt input pins (KR0 to KR7).

Table 20-1. Assignment of Key Interrupt Detection Pins

Key Interrupt Input Pins	Key Return Mode Register (KRM)
KR0	KRM00
KR1	KRM01
KR2	KRM02
KR3	KRM03
KR4	KRM04
KR5	KRM05
KR6	KRM06
KR7	KRM07

Remark KR1 to KR3: Available in the 80-pin products only.

20.2 Configuration of Key Interrupt

The key interrupt includes the following hardware.

Table 20-2. Configuration of Key Interrupt

Item	Configuration
Input	KR0 to KR7
Control register	Key return control register (KRCTL) Key return mode register (KRM0) Key return flag register (KRF) Port mode register 7 (PM7) Port register 7 (P7)

Figure 20-1. Block Diagram of Key Interrupt

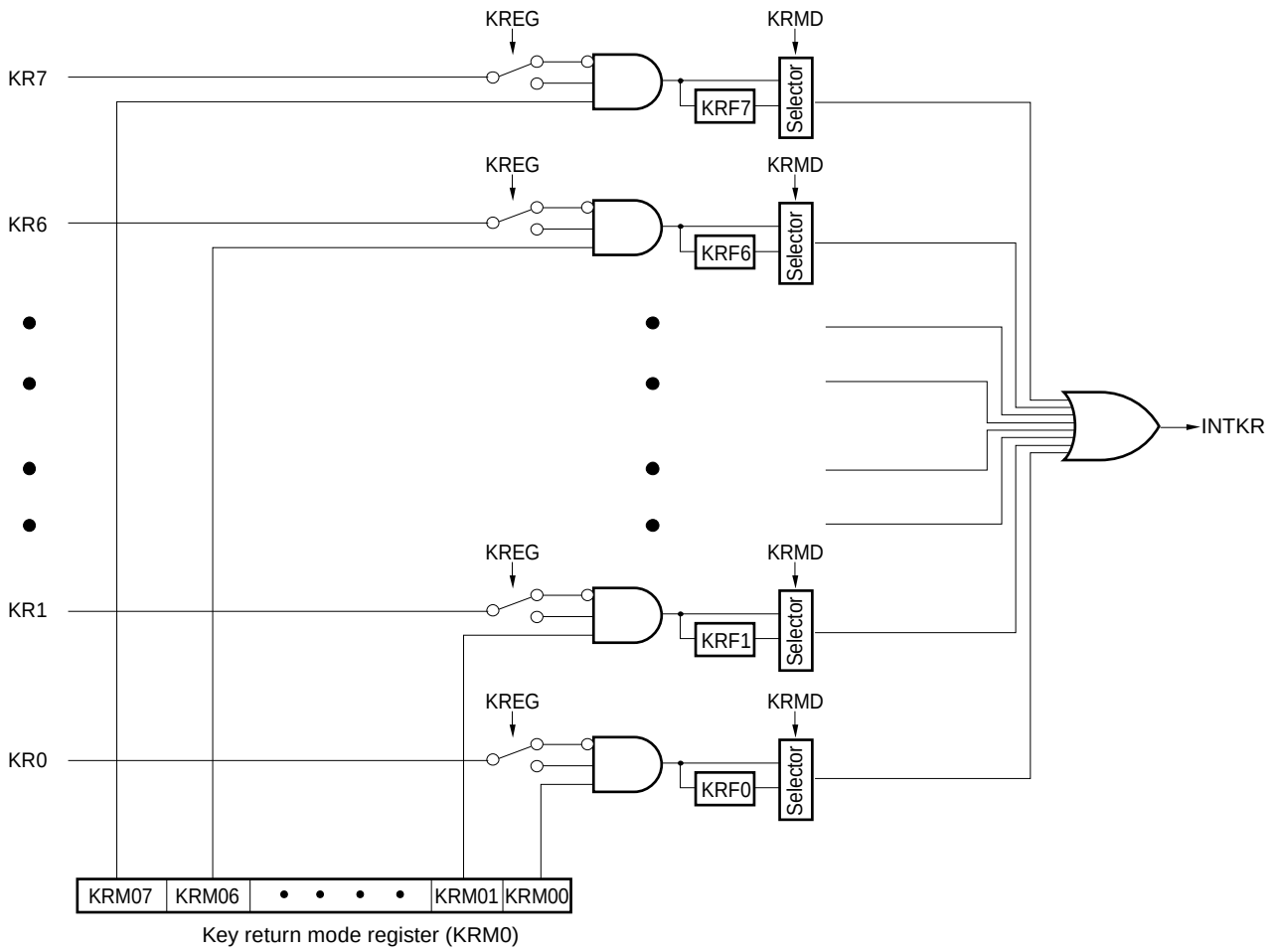

20.3 Register Controlling Key Interrupt

The key interrupt function is controlled by the following registers:

- Key return control register (KRCTL)
- Key return mode register (KRM0)
- Key return flag register (KRF)
- Port mode register 7 (PM7)
- Port register 7 (P7)

20.3.1 Key return control register (KRCTL)

This register controls the usage of the key return flags (KRF0 to KRF7) and sets the detection edge.
The KRCTL register can be set by a 1-bit or 8-bit memory manipulation instruction.
Reset signal generation clears this register to 00H.

Figure 20-2. Format of Key Return Control Register (KRCTL)

Address: FFF34H After reset: 00H R/W

Symbol	7	6	5	4	3	2	1	0
KRCTL	KRMD	0	0	0	0	0	0	KREG

KRMD	Usage of key return flags (KRF0 to KRF7)
0	Does not use key return flags
1	Uses key return flags

KREG	Selection of detection edge (KR0 to KR7)
0	Falling edge
1	Rising edge

20.3.2 Key return mode register (KRM0)

This register set the key interrupt mode.

The KRM0 register can be set by a 1-bit or 8-bit memory manipulation instruction.

Reset signal generation clears this register to 00H.

Figure 20-3. Format of Key Return Mode Register (KRM0)

Address: FFF37H After reset: 00H R/W

Symbol	7	6	5	4	3	2	1	0
KRM0	KRM07	KRM06	KRM05	KRM04	KRM03[Note]	KRM02[Note]	KRM01[Note]	KRM00

KRM0n	Key interrupt mode control
0	Does not detect key interrupt signal
1	Detects key interrupt signal

Note 80-pin products only.

Cautions 1. When selecting the falling edge detection, the on-chip pull-up resistor can be used by setting the corresponding bit (PU70 to PU77) in pull-up resistor option register 7 (PU7) to 1.

2. An interrupt will be generated if the target bit of the KRM0 register is set while a low level (when the bit 0 (KREG) of the key return control register (KRCTL) is set to 0) or high level (when the bit 0 (KREG) of the key return control register (KRCTL) is set to 1) is being input to the key interrupt input pin.

To ignore this interrupt, set the KRM0 register after disabling interrupt servicing by using the interrupt mask flag. Afterward, clear the interrupt request flag and enable interrupt servicing after waiting for the key interrupt input high-level width or low-level width (see 32.4 or 33.4 AC Characteristics).

3. The bits not used in the key interrupt mode can be used as normal ports.

20.3.3 Key return flag register (KRF)

This register controls the key return flags (KRF0 to KRF7).

The KRF register can be set by an 8-bit memory manipulation instruction.

Reset signal generation clears this register to 00H.

Figure 20-4. Format of Key Return Flag Register (KRF)

Address: FFF35H After reset: 00H R/W[Note 1]

Symbol	7	6	5	4	3	2	1	0
KRF	KRF7	KRF6	KRF5	KRF4	KRF3[Note 2]	KRF2[Note 2]	KRF1[Note 2]	KRF0

KRFn	Key interrupt flag (n = 0 to 7)
0	No key interrupt signal has been detected.
1	A key interrupt signal has been detected.

Notes 1. The bits in this register cannot be set to 1. To clear KRFn, write to the bits by using an 8-bit memory manipulation instruction in which 0 is written to the target bit and 1 is written to the other bits.

2. 80-pin products only.

Caution When using the key return flag (KRMD = 1), if other KRMm is set to 1 before clearing KRFn (m ≠ n) that set to 1, the key interrupt is not generated. To acknowledge next key interrupt after key interrupt is generated, be sure to clear the corresponding KRFn.

20.3.4 Port mode register 7 (PM7)

Write 1 to the bit of port mode register (PM7) corresponding to each port when using P70/KR0 to P77/KR7 as a key input. The output latches of P7n at this time may be 0 or 1.

The PM7 register can be set by a 1-bit or 8-bit memory manipulation instruction.

Reset signal generation clears this register to FFH.

Figure 20-5. Format of Port Mode Register 7 (PM7) (80-pin products)

Address: FFF27H After reset: 00H R/W

Symbol	7	6	5	4	3	2	1	0
PM7	PM77	PM76	PM75	PM74	PM73	PM72	PM71	PM70

PM7n	I/O mode selection for P7n/KRn pin (n = 0 to 7)
0	Output mode (output buffer on)
1	Input mode (output buffer off)

CHAPTER 21 STANDBY FUNCTION

21.1 Standby Function

The standby function reduces the operating current of the system, and the following three modes are available.

(1) HALT mode

HALT instruction execution sets the HALT mode. In the HALT mode, the CPU operation clock is stopped. If the high-speed system clock oscillator, high-speed on-chip oscillator, or subsystem clock oscillator is operating before the HALT mode is set, oscillation of each clock continues. In this mode, the operating current is not decreased as much as in the STOP mode, but the HALT mode is effective for restarting operation immediately upon interrupt request generation and carrying out intermittent operations frequently.

(2) STOP mode

STOP instruction execution sets the STOP mode. In the STOP mode, the high-speed system clock oscillator and high-speed on-chip oscillator stop, stopping the whole system, thereby considerably reducing the CPU operating current.

Because this mode can be cleared by an interrupt request, it enables intermittent operations to be carried out. However, because a wait time is required to secure the oscillation stabilization time after the STOP mode is released when the X1 clock is selected, select the HALT mode if it is necessary to start processing immediately upon interrupt request generation.

(3) SNOOZE mode

In the case of CSIp or UARTq data reception and an A/D conversion request by the timer trigger signal (the interrupt request signal (INTRTC/INTIT)), the STOP mode is exited, the CSIp or UARTq data is received without operating the CPU, and A/D conversion is performed. This can only be specified when the high-speed on-chip oscillator is selected for the CPU/peripheral hardware clock (f_{CLK}).

In all these modes, all the contents of registers, flags and data memory just before the standby mode is set are held. The I/O port output latches and output buffer statuses are also held.

Cautions 1. The STOP mode can be used only when the CPU is operating on the main system clock. Do not set to the STOP mode while the CPU operates with the subsystem clock. The HALT mode can be used when the CPU is operating on either the main system clock or the subsystem clock.

2. When shifting to the STOP mode, be sure to stop the peripheral hardware operation operating with main system clock before executing STOP instruction (except SNOOZE mode setting unit).

3. When using CSIp, UARTq, or the A/D converter in the SNOOZE mode, set up serial standby control register m (SSCm) and A/D converter mode register 2 (ADM2) before switching to the STOP mode. For details, see 14.3 Registers Controlling Serial Array Unit and 12.3 Registers Used in A/D Converter.

4. The following sequence is recommended for power consumption reduction of the A/D converter when the standby function is used: First clear bit 7 (ADCS) and bit 0 (ADCE) of A/D converter mode register 0 (ADM0) to 0 to stop the A/D conversion operation, and then execute the STOP instruction.

5. It can be selected by the option byte whether the low-speed on-chip oscillator continues oscillating or stops in the HALT or STOP mode. For details, see CHAPTER 27 OPTION BYTE.

Remark p = 00; q = 0, 2; m = 0, 1

21.2 Registers Controlling Standby Function

The registers which control the standby function are described below.

- Subsystem clock supply mode control register (OSMC)
- Oscillation stabilization time counter status register (OSTC)
- Oscillation stabilization time select register (OSTS)

Remark For details of registers described above, see **CHAPTER 5 CLOCK GENERATOR**. For registers which control the SNOOZE mode, **CHAPTER 12 A/D CONVERTER** and **CHAPTER 14 SERIAL ARRAY UNIT**.

21.3 Standby Function Operation

21.3.1 HALT mode

(1) HALT mode

The HALT mode is set by executing the HALT instruction. HALT mode can be set regardless of whether the CPU clock before the setting was the high-speed system clock, high-speed on-chip oscillator clock, or subsystem clock.
The operating statuses in the HALT mode are shown below.

Caution Because the interrupt request signal is used to clear the HALT mode, if the interrupt mask flag is 0 (the interrupt processing is enabled) and the interrupt request flag is 1 (the interrupt request signal is generated), the HALT mode is not entered even if the HALT instruction is executed in such a situation.

Table 21-1. Operating Statuses in HALT Mode (1/2)

HALT Mode Setting / Item			When HALT Instruction Is Executed While CPU Is Operating on Main System Clock		
			When CPU Is Operating on High-speed On-chip Oscillator Clock (f_{IH})	When CPU Is Operating on X1 Clock (f_X)	When CPU Is Operating on External Main System Clock (f_{EX})
System clock			Clock supply to the CPU is stopped		
	Main system clock	f_{IH}	Operation continues (cannot be stopped)	Operation disabled	
		f_X	Operation disabled	Operation continues (cannot be stopped)	Cannot operate
		f_{EX}		Cannot operate	Operation continues (cannot be stopped)
	Subsystem clock	f_{XT}	Status before HALT mode was set is retained		
		f_{EXS}			
	f_{IL}		Set by bits 0 (WDSTBYON) and 4 (WDTON) of option byte (000C0H), and WUTMMCK0 bit of subsystem clock supply mode control register (OSMC) ● WUTMMCK0 = 1: Oscillates ● WUTMMCK0 = 0 and WDTON = 0: Stops ● WUTMMCK0 = 0, WDTON = 1, and WDSTBYON = 1: Oscillates ● WUTMMCK0 = 0, WDTON = 1, and WDSTBYON = 0: Stops		
CPU			Operation stopped		
Code flash memory			Operation stopped		
Data flash memory					
RAM					
Port (latch)			Status before HALT mode was set is retained		
Timer array unit			Operable		
Timer KB20					
Real-time clock 2					
12-bit interval timer			Operation stopped (operable when DMA is executed)		
Watchdog timer			See **CHAPTER 11 WATCHDOG TIMER**		
Clock output/buzzer output			Operable		
A/D converter					
Comparator					
Serial array unit (SAU)					
Serial interface (IICA)					
LCD driver/controller			Operable (However, this depends on the status of the clock selected as the LCD source clock: operation is possible if the selected clock is operating, but operation will stop if the selected clock is stopped.)		
Multiplier and divider/multiply-accumulator			Operable		
DMA controller					
Power-on-reset function					
Voltage detection function					
External interrupt					
Key interrupt function					
CRC operation function	High-speed CRC				
	General-purpose CRC		In the calculation of the RAM area, operable when DMA is executed only		
RAM parity error detection function			Operable when DMA is executed only		
RAM guard function					
SFR guard function					
Illegal-memory access detection function					

(**Remark** is listed on the next page.)

Remark Operation stopped: Operation is automatically stopped before switching to the HALT mode.
Operation disabled: Operation is stopped before switching to the HALT mode.

f_{IH}:	High-speed on-chip oscillator clock	f_{EX}:	External main system clock
f_{IL}:	Low-speed on-chip oscillator clock	f_{XT}:	XT1 clock
f_X:	X1 clock	f_{EXS}:	External subsystem clock

Table 21-1. Operating Statuses in HALT Mode (2/2)

Item \ HALT Mode Setting			When HALT Instruction Is Executed While CPU Is Operating on Subsystem Clock	
			When CPU Is Operating on XT1 Clock (f_{XT})	When CPU Is Operating on External Subsystem Clock (f_{EXS})
System clock			Clock supply to the CPU is stopped	
	Main system clock	f_{IH}	Operation disabled	
		f_X		
		f_{EX}		
	Subsystem clock	f_{XT}	Operation continues (cannot be stopped)	Cannot operate
		f_{EXS}	Cannot operate	Operation continues (cannot be stopped)
	f_{IL}		Set by bits 0 (WDSTBYON) and 4 (WDTON) of option byte (000C0H), and WUTMMCK0 bit of subsystem clock supply mode control register (OSMC) ● WUTMMCK0 = 1: Oscillates ● WUTMMCK0 = 0 and WDTON = 0: Stops ● WUTMMCK0 = 0, WDTON = 1, and WDSTBYON = 1: Oscillates ● WUTMMCK0 = 0, WDTON = 1, and WDSTBYON = 0: Stops	
CPU			Operation stopped	
Code flash memory				
Data flash memory				
RAM				
Port (latch)			Status before HALT mode was set is retained	
Timer array unit			Operates when the RTCLPC bit is 0 (operation is disabled when the RTCLPC bit is not 0).	
Timer KB20				
Real-time clock 2			Operable	
12-bit interval timer				
Watchdog timer			See **CHAPTER 11 WATCHDOG TIMER**	
Clock output/buzzer output			Operable	
A/D converter			Operation disabled	
Comparator			Operable when external input (IVREFn) is selected for comparator reference voltage.	
Serial array unit (SAU)			Operates when the RTCLPC bit is 0 (operation is disabled when the RTCLPC bit is not 0).	
Serial interface (IICA)			Operation disabled	
LCD driver/controller			Operable (However, this depends on the status of the clock selected as the LCD source clock: operation is possible if the selected clock is operating, but operation will stop if the selected clock is stopped.)	
Multiplier and divider/multiply-accumulator			Operates when the RTCLPC bit is 0 (operation is disabled when the RTCLPC bit is not 0).	
DMA controller				
Power-on-reset function			Operable	
Voltage detection function				
External interrupt				
Key interrupt function				
CRC operation function	High-speed CRC		Operation disabled	
	General-purpose CRC		In the calculation of the RAM area, operable when DMA is executed only	
RAM parity error detection function			Operable when DMA is executed only	
RAM guard function				
SFR guard function				
Illegal-memory access detection function				

(**Remark** is listed on the next page.)

Remark Operation stopped: Operation is automatically stopped before switching to the HALT mode.
Operation disabled: Operation is stopped before switching to the HALT mode.

f_{IH}:	High-speed on-chip oscillator clock	f_{EX}:	External main system clock
f_{IL}:	Low-speed on-chip oscillator clock	f_{XT}:	XT1 clock
f_X:	X1 clock	f_{EXS}:	External subsystem clock

(2) HALT mode release

The HALT mode can be released by the following two sources.

(a) Release by unmasked interrupt request

When an unmasked interrupt request is generated, the HALT mode is released. If interrupt acknowledgment is enabled, vectored interrupt servicing is carried out. If interrupt acknowledgment is disabled, the next address instruction is executed.

Figure 21-1. HALT Mode Release by Interrupt Request Generation

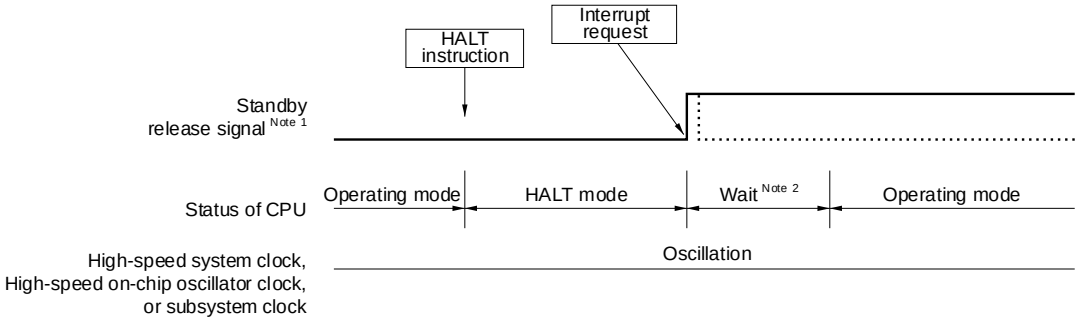

Notes 1. For details of the standby release signal, see **Figure 19-1**

2. Wait time for HALT mode release

- When vectored interrupt servicing is carried out
  - Main system clock: 15 to 16 clock
  - Subsystem clock (RTCLPC = 0): 10 to 11 clock
  - Subsystem clock (RTCLPC = 1): 11 to 12 clock
- When vectored interrupt servicing is not carried out
  - Main system clock: 9 to 10 clock
  - Subsystem clock (RTCLPC = 0): 4 to 5 clock
  - Subsystem clock (RTCLPC = 1): 5 to 6 clock

Remark The broken lines indicate the case when the interrupt request which has released the standby mode is acknowledged.

(b) Release by reset signal generation

When the reset signal is generated, HALT mode is released, and then, as in the case with a normal reset operation, the program is executed after branching to the reset vector address.

Figure 21-2. HALT Mode Release by Reset (1/2)

(1) When high-speed on-chip oscillator clock is used as CPU clock

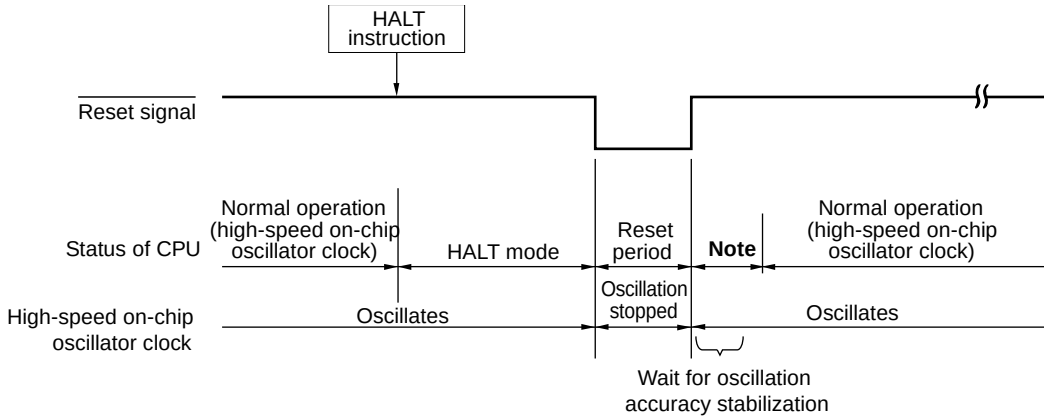

(2) When high-speed system clock is used as CPU clock

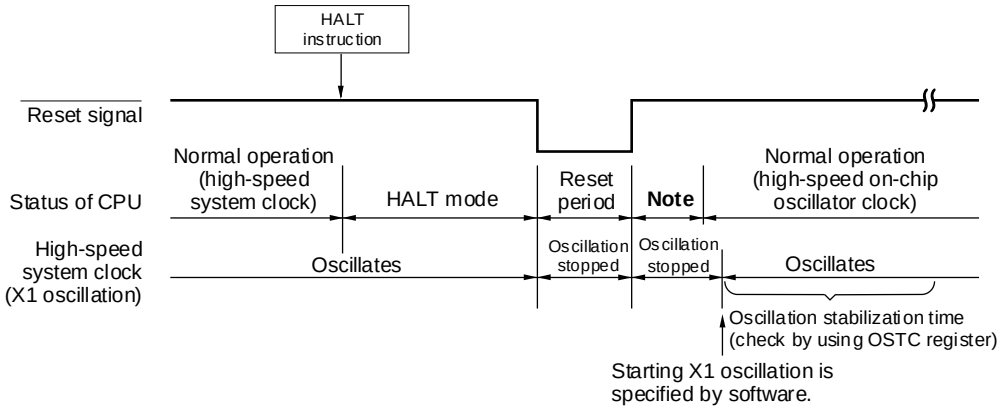

Note For the reset processing time, see **CHAPTER 22 RESET FUNCTION**. For the reset processing time of the power-on-reset circuit (POR) and voltage detector (LVD), see **CHAPTER 23 POWER-ON-RESET CIRCUIT**.

Figure 21-2. HALT Mode Release by Reset (2/2)

(3) When subsystem clock is used as CPU clock

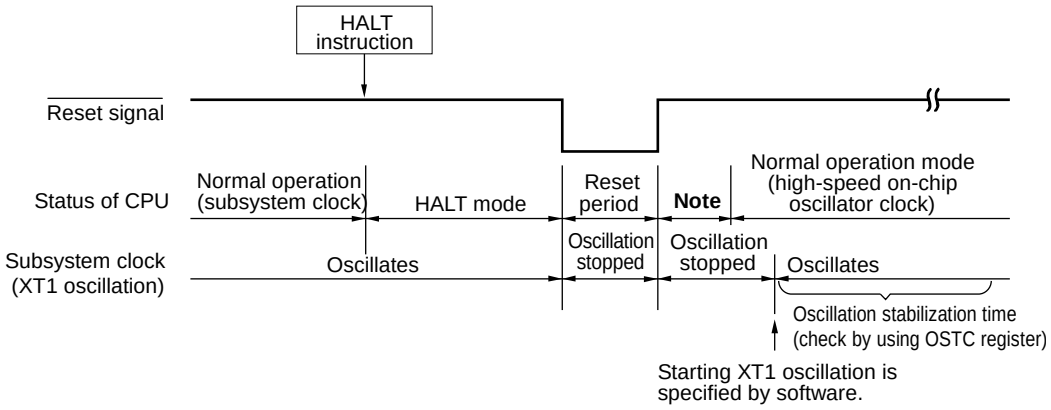

Note For the reset processing time, see **CHAPTER 22 RESET FUNCTION**. For the reset processing time of the power-on-reset circuit (POR) and voltage detector (LVD), see **CHAPTER 23 POWER-ON-RESET CIRCUIT**.

21.3.2 STOP mode

(1) STOP mode setting and operating statuses

The STOP mode is set by executing the STOP instruction, and it can be set only when the CPU clock before the setting was the high-speed on-chip oscillator clock, X1 clock, or external main system clock.

Caution Because the interrupt request signal is used to clear the STOP mode, if the interrupt mask flag is 0 (the interrupt processing is enabled) and the interrupt request flag is 1 (the interrupt request signal is generated), the STOP mode is immediately cleared if set when the STOP instruction is executed in such a situation. Accordingly, once the STOP instruction is executed, the system returns to its normal operating mode after the elapse of release time from the STOP mode.

The operating statuses in the STOP mode are shown below.

Table 21-2. Operating Statuses in STOP Mode

Item \ STOP Mode Setting	When STOP Instruction Is Executed While CPU Is Operating on Main System Clock		
	When CPU Is Operating on High-speed on-chip oscillator clock (f_{IH})	When CPU Is Operating on X1 Clock (f_X)	When CPU Is Operating on External Main System Clock (f_{EX})
System clock	Clock supply to the CPU is stopped		
Main system clock: f_{IH}	Stopped		
Main system clock: f_X			
Main system clock: f_{EX}			
Subsystem clock: f_{XT}	Status before STOP mode was set is retained		
Subsystem clock: f_{EXS}			
f_{IL}	Set by bits 0 (WDSTBYON) and 4 (WDTON) of option byte (000C0H), and WUTMMCK0 bit of subsystem clock supply mode control register (OSMC) ● WUTMMCK0 = 1: Oscillates ● WUTMMCK0 = 0 and WDTON = 0: Stops ● WUTMMCK0 = 0, WDTON = 1, and WDSTBYON = 1: Oscillates ● WUTMMCK0 = 0, WDTON = 1, and WDSTBYON = 0: Stops		
CPU	Operation stopped		
Code flash memory			
Data flash memory	Operation stopped		
RAM	Operation stopped		
Port (latch)	Status before STOP mode was set is retained		
Timer array unit	Operation disabled		
Timer KB20			
Real-time clock 2	Operable		
12-bit interval timer			
Watchdog timer	See **CHAPTER 11 WATCHDOG TIMER**		
Clock output/buzzer output	Operable only when subsystem clock is selected as the count clock		
A/D converter	Wakeup operation is enabled (switching to the SNOOZE mode)		
Comparator	Operable (only when digital filter is not used and external input (IVREFn) is selected for comparator reference voltage)		
Serial array unit (SAU)	Wakeup operation is enabled only for CSIp and UARTq (switching to the SNOOZE mode) Operation is disabled for anything other than CSIp and UARTq		
Serial interface (IICA)	Wakeup by address match operable		
LCD driver/controller	Operable (However, this depends on the status of the clock selected as the LCD source clock: operation is possible if the selected clock is operating, but operation will stop if the selected clock is stopped.)		
Multiplier and divider/multiply-accumulator	Operation disabled		
DMA controller			
Power-on-reset function	Operable		
Voltage detection function			
External interrupt			
Key interrupt function			
CRC operation function: High-speed CRC	Operation stopped		
CRC operation function: General-purpose CRC			
RAM parity error detection function			
RAM guard function			
SFR guard function			
Illegal-memory access detection function			

(**Remarks** are listed on the next page.)

Remarks 1. Operation stopped: Operation is automatically stopped before switching to the STOP mode.
Operation disabled: Operation is stopped before switching to the STOP mode.
f_{IH}: High-speed on-chip oscillator clock f_{IL}: Low-speed on-chip oscillator clock
f_X: X1 clock f_{EX}: External main system clock
f_{XT}: XT1 clock f_{EXS}: External subsystem clock
2. p = 00; q = 0, 2

(2) STOP mode release

The STOP mode can be released by the following two sources.

(a) Release by unmasked interrupt request

When an unmasked interrupt request is generated, the STOP mode is released. After the oscillation stabilization time has elapsed, if interrupt acknowledgment is enabled, vectored interrupt servicing is carried out. If interrupt acknowledgment is disabled, the next address instruction is executed.

Figure 21-3. STOP Mode Release by Interrupt Request Generation (1/3)

(1) When high-speed on-chip oscillator clock is used as CPU clock

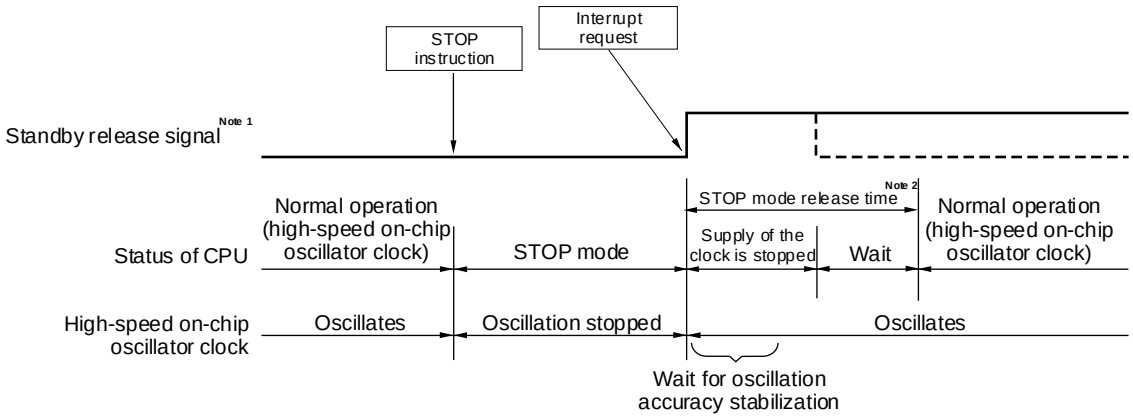

Notes 1. For details of the standby release signal, see **Figure 19-1**.
2. STOP mode release time
Supply of the clock is stopped:
- FRQSEL4 = 0: 18 µs to "whichever is longer 65 µs or the oscillation stabilization time (set by OSTS)"
- FRQSEL4 = 1: 18 µs to "whichever is longer 80 µs or the oscillation stabilization time (set by OSTS)"

Wait
- When vectored interrupt servicing is carried out: 7 clocks
- When vectored interrupt servicing is not carried out: 1 clock

Remarks 1. The clock supply stop time varies depending on the temperature conditions and STOP mode period.
2. The broken lines indicate the case when the interrupt request that has released the standby mode is acknowledged.

Figure 21-3. STOP Mode Release by Interrupt Request Generation (2/3)

(2) When high-speed system clock (X1 oscillation) is used as CPU clock

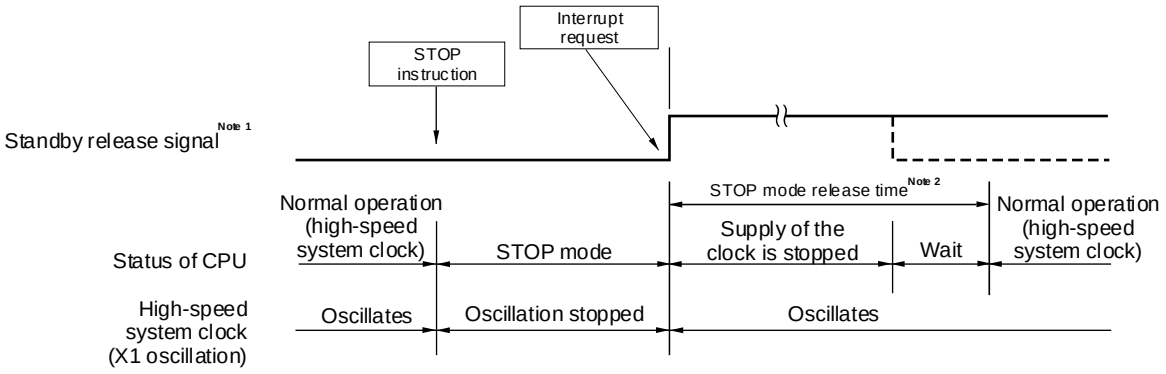

Notes 1. For details of the standby release signal, see **Figure 19-1**

2. STOP mode release time

Supply of the clock is stopped:

- FRQSEL4 = 0: 18 µs to “whichever is longer 65 µs or the oscillation stabilization time (set by OSTS)”
- FRQSEL4 = 1: 18 µs to “whichever is longer 80 µs or the oscillation stabilization time (set by OSTS)”

Wait

- When vectored interrupt servicing is carried out: 10 to 11 clocks
- When vectored interrupt servicing is not carried out: 4 to 5 clocks

Caution To reduce the oscillation stabilization time after release from the STOP mode while CPU operates based on the high-speed system clock (X1 oscillation), switch the clock to the high-speed on-chip oscillator clock temporarily before executing the STOP instruction.

Remarks 1. The clock supply stop time varies depending on the temperature conditions and STOP mode period.

2. The broken lines indicate the case when the interrupt request that has released the standby mode is acknowledged.

Figure 21-3. STOP Mode Release by Interrupt Request Generation (3/3)

(3) When high-speed system clock (external clock input) is used as CPU clock

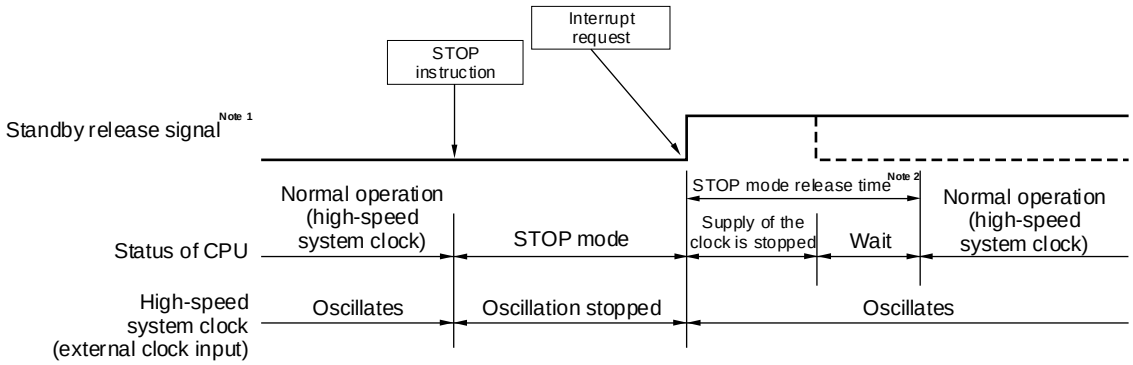

Notes 1. For details of the standby release signal, see **Figure 19-1**

2. STOP mode release time

Supply of the clock is stopped:

- FRQSEL4 = 0: 18 μs to “whichever is longer 65 μs or the oscillation stabilization time (set by OSTS)”
- FRQSEL4 = 1: 18 μs to “whichever is longer 80 μs or the oscillation stabilization time (set by OSTS)”

Wait

- When vectored interrupt servicing is carried out: 7 clocks
- When vectored interrupt servicing is not carried out: 1 clock

Caution To reduce the oscillation stabilization time after release from the STOP mode while CPU operates based on the high-speed system clock (X1 oscillation), switch the clock to the high-speed on-chip oscillator clock temporarily before executing the STOP instruction.

Remarks 1. The clock supply stop time varies depending on the temperature conditions and STOP mode period.

2. The broken lines indicate the case when the interrupt request that has released the standby mode is acknowledged.

(b) Release by reset signal generation

When the reset signal is generated, STOP mode is released, and then, as in the case with a normal reset operation, the program is executed after branching to the reset vector address.

Figure 21-4. STOP Mode Release by Reset

(1) When high-speed on-chip oscillator clock is used as CPU clock

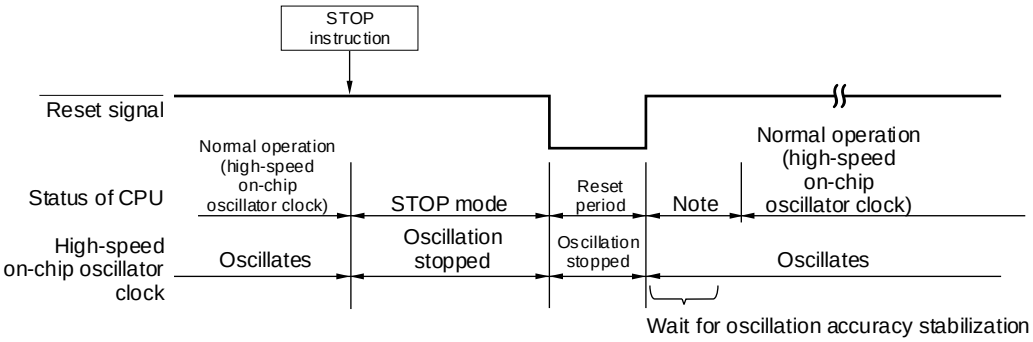

(2) When high-speed system clock is used as CPU clock

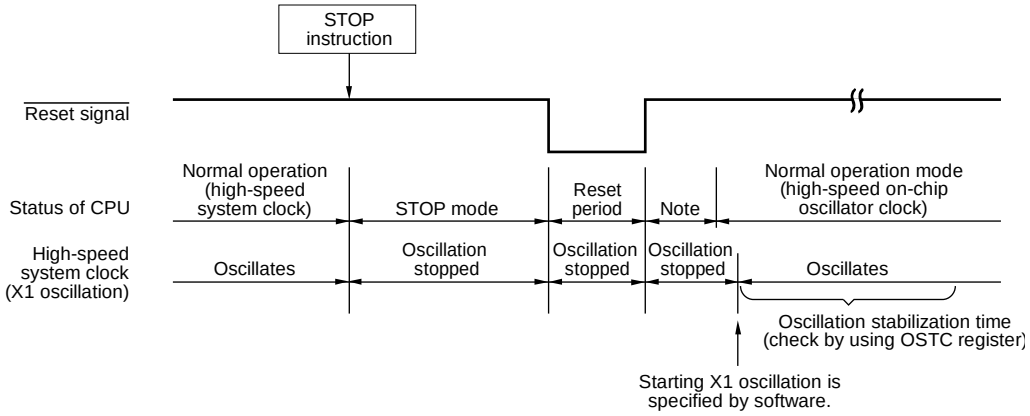

Note For the reset processing time, see **CHAPTER 22 RESET FUNCTION**. For the reset processing time of the power-on-reset circuit (POR) and voltage detector (LVD), see **CHAPTER 23 POWER-ON-RESET CIRCUIT**.

21.3.3 SNOOZE mode

(1) SNOOZE mode setting and operating statuses

The SNOOZE mode can only be specified for CSIp, UARTq, or the A/D converter. Note that this mode can only be specified if the CPU clock is the high-speed on-chip oscillator clock.

When using CSIp or UARTq in the SNOOZE mode, set the SWCm bit of serial standby control register m (SSCm) to 1 immediately before switching to the STOP mode. For details, see **14.3 Registers Controlling Serial Array Unit**.

When using the A/D converter in the SNOOZE mode, set the AWC bit of A/D converter mode register 2 (ADM2) to 1 immediately before switching to the STOP mode. For details, see **12.3 Registers Used in A/D Converter**.

Remark p = 00; q = 0, 2; m = 0, 1

The following time is required for mode transition.

Transition time from STOP mode to SNOOZE mode:

FRQSEL4 = 0: 18 to 65 μs

FRQSEL4 = 1: 18 to 80 μs

Transition time from SNOOZE mode to normal operation:

- When vectored interrupt servicing is carried out:
  HS (High-speed main) mode : 4.99 to 9.44 μs + 7 clocks
  LS (Low-speed main) mode : 1.10 to 5.08 μs + 7 clocks
  LV (Low-voltage main) mode : 16.58 to 25.40 μs + 7 clocks
- When vectored interrupt servicing is not carried out:
  HS (High-speed main) mode : 4.99 to 9.44 μs + 1 clock
  LS (Low-speed main) mode : 1.10 to 5.08 μs + 1 clock
  LV (Low-voltage main) mode : 16.58 to 25.40 μs + 1 clock

The operating statuses in the SNOOZE mode are shown below.

Table 21-3. Operating Statuses in SNOOZE Mode

Item \ STOP Mode Setting	When Inputting CSIp/UARTq Data Reception Signal or A/D Converter Timer Trigger Signal While in STOP Mode
	When CPU Is Operating on High-speed on-chip oscillator clock (f_{IH})
System clock	Clock supply to the CPU is stopped
Main system clock f_{IH}	Operation started
Main system clock f_X	Stopped
Main system clock f_{EX}	
Subsystem clock f_{XT}	Use of the status while in the STOP mode continues
Subsystem clock f_{EXS}	
f_{IL}	Set by bits 0 (WDSTBYON) and 4 (WDTON) of option byte (000C0H), and WUTMMCK0 bit of subsystem clock supply mode control register (OSMC) ● WUTMMCK0 = 1: Oscillates ● WUTMMCK0 = 0 and WDTON = 0: Stops ● WUTMMCK0 = 0, WDTON = 1, and WDSTBYON = 1: Oscillates ● WUTMMCK0 = 0, WDTON = 1, and WDSTBYON = 0: Stops
CPU	Operation stopped
Code flash memory	
Data flash memory	
RAM	
Port (latch)	Use of the status while in the STOP mode continues
Timer array unit	Operation disabled
Timer KB20	
Real-time clock 2	Operable
12-bit interval timer	
Watchdog timer	See **CHAPTER 11 WATCHDOG TIMER**
Clock output/buzzer output	Operable only when subsystem clock is selected as the count clock
A/D converter	Operable
Comparator	Operable (when digital filter is not used)
Serial array unit (SAU)	Operable only CSIp and UARTq only. Operation disabled other than CSIp and UARTq.
Serial interface (IICA)	Operation disabled
LCD driver/controller	Operable (However, this depends on the status of the clock selected as the LCD source clock: operation is possible if the selected clock is operating, but operation will stop if the selected clock is stopped.)
Multiplier and divider/multiply-accumulator	Operation disabled
DMA controller	
Power-on-reset function	Operable
Voltage detection function	
External interrupt	
Key interrupt function	
CRC operation function: High-speed CRC	Operation disabled
CRC operation function: General-purpose CRC	
RAM parity error detection function	
RAM guard function	
SFR guard function	
Illegal-memory access detection function	

(**Remark** is listed on the next page.)

Remarks 1. Operation stopped: Operation is automatically stopped before switching to the SNOOZE mode.
Operation disabled: Operation is stopped before switching to the SNOOZE mode.
f_{IH}: High-speed on-chip oscillator clock f_{IL}: Low-speed on-chip oscillator clock
f_X: X1 clock f_{EX}: External main system clock
f_{XT}: XT1 clock f_{EXS}: External subsystem clock
2. p = 00; q = 0, 2

(2) Timing diagram when the interrupt request signal is generated in the SNOOZE mode

Figure 21-5. When the Interrupt Request Signal is Generated in the SNOOZE Mode

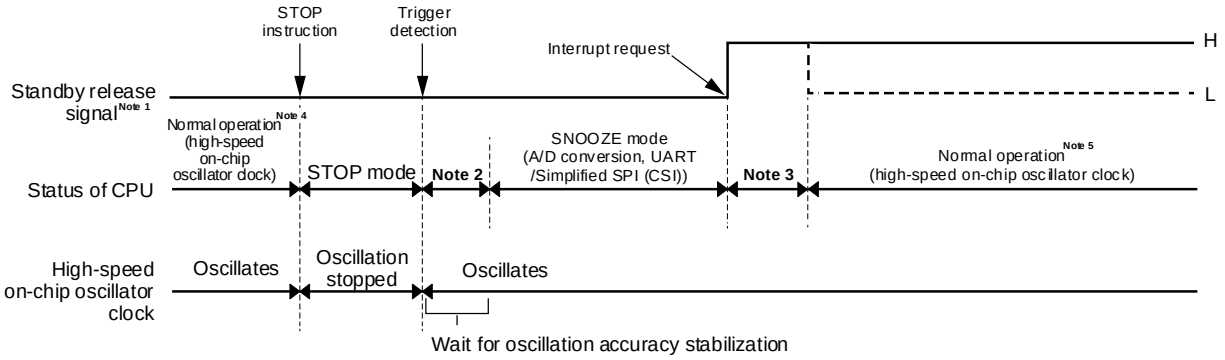

Notes 1. For details of the standby release signal, see **Figure 19-1**.
2. Transition time from STOP mode to SNOOZE mode
3. Transition time from SNOOZE mode to normal operation
4. Enable the SNOOZE mode (AWC = 1 or SWC = 1) immediately before switching to the STOP mode.
5. Be sure to release the SNOOZE mode (AWC = 0 or SWC = 0) immediately after return to the normal operation.

(3) Timing diagram when the interrupt request signal is not generated in the SNOOZE mode

Figure 21-6. When the Interrupt Request Signal is not Generated in the SNOOZE Mode

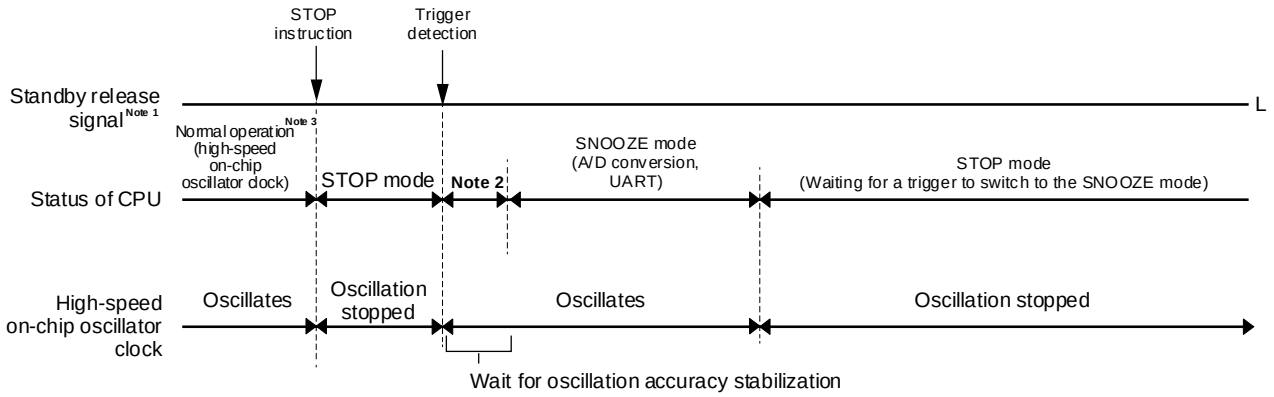

Notes 1. For details of the standby release signal, see **Figure 19-1**.
2. Transition time from STOP mode to SNOOZE mode
3. Enable the SNOOZE mode (AWC = 1 or SWC = 1) immediately before switching to the STOP mode.

Remark For details of the SNOOZE mode function, see **CHAPTER 12 A/D CONVERTER** and **CHAPTER 14 SERIAL ARRAY UNIT**.

CHAPTER 22 RESET FUNCTION

The following seven operations are available to generate a reset signal.

(1) External reset input via $\overline{\text{RESET}}$ pin
(2) Internal reset by watchdog timer program loop detection
(3) Internal reset by comparison of supply voltage and detection voltage of power-on-reset (POR) circuit
(4) Internal reset by comparison of supply voltage of the voltage detector (LVD) and detection voltage
(5) Internal reset by execution of illegal instruction[Note]
(6) Internal reset by RAM parity error
(7) Internal reset by illegal-memory access

External and internal resets start program execution from the address at 00000H and 00001H when the reset signal is generated.

A reset is effected when a low level is input to the $\overline{\text{RESET}}$ pin, the watchdog timer overflows, or by POR and LVD circuit voltage detection, execution of illegal instruction[Note], RAM parity error or illegal-memory access, and each item of hardware is set to the status shown in Table 22-1.

Note This reset occurs when instruction code FFH is executed.
This reset does not occur during emulation using an in-circuit emulator or an on-chip debugging emulator.

Cautions 1. For an external reset, input a low level for 10 μs or more to the $\overline{\text{RESET}}$ pin.
To perform an external reset upon power application, input a low level to the $\overline{\text{RESET}}$ pin, turn power on, continue to input a low level to the pin for 10 μs or more within the operating voltage range shown in 32.4 or 33.4 AC Characteristics, and then input a high level to the pin.

2. During reset input, the X1 clock, high-speed on-chip oscillator clock, and low-speed on-chip oscillator clock stop oscillating. External main system clock input and external subsystem clock input become invalid.

3. When reset is effected, port pins become high-impedance, because each SFR and 2nd SFR are initialized.
- **P40: High-impedance during the external reset period or reset period by the POR. High level during other types of reset or after receiving a reset signal (connected to the on-chip pull-up resistor).**
- **Ports other than P40: High-impedance during the reset period or after receiving a reset signal.**

Figure 22-1. Block Diagram of Reset Function

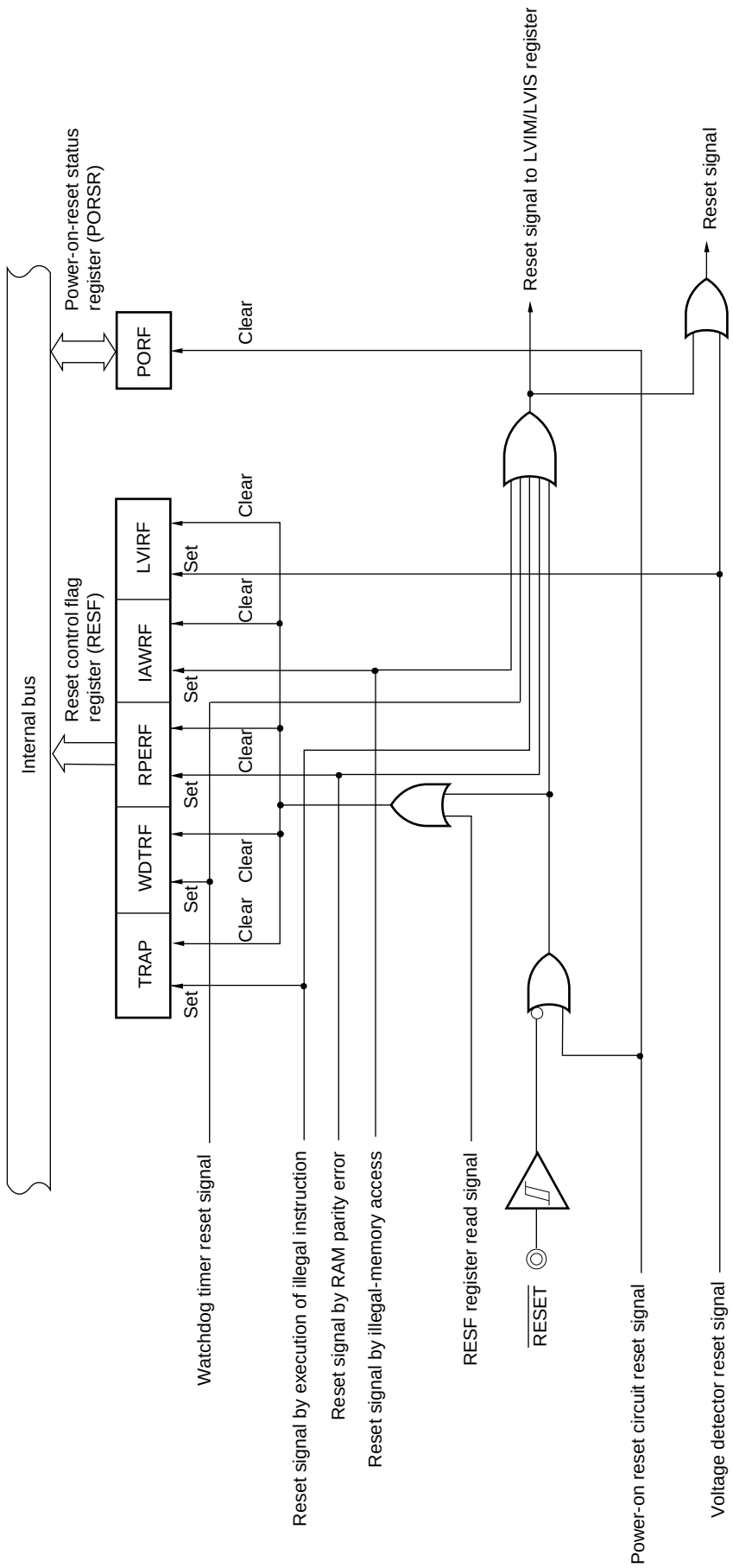

Caution An LVD circuit internal reset does not reset the LVD circuit.

Remarks 1. LVIM: Voltage detection register
2. LVIS: Voltage detection level register

22.1 Timing of Reset Operation

This LSI is reset by input of the low level on the $\overline{\text{RESET}}$ pin and released from the reset state by input of the high level on the $\overline{\text{RESET}}$ pin. After reset processing, execution of the program with the high-speed on-chip oscillator clock as the operating clock starts.

Figure 22-2. Timing of Reset by $\overline{\text{RESET}}$ Input

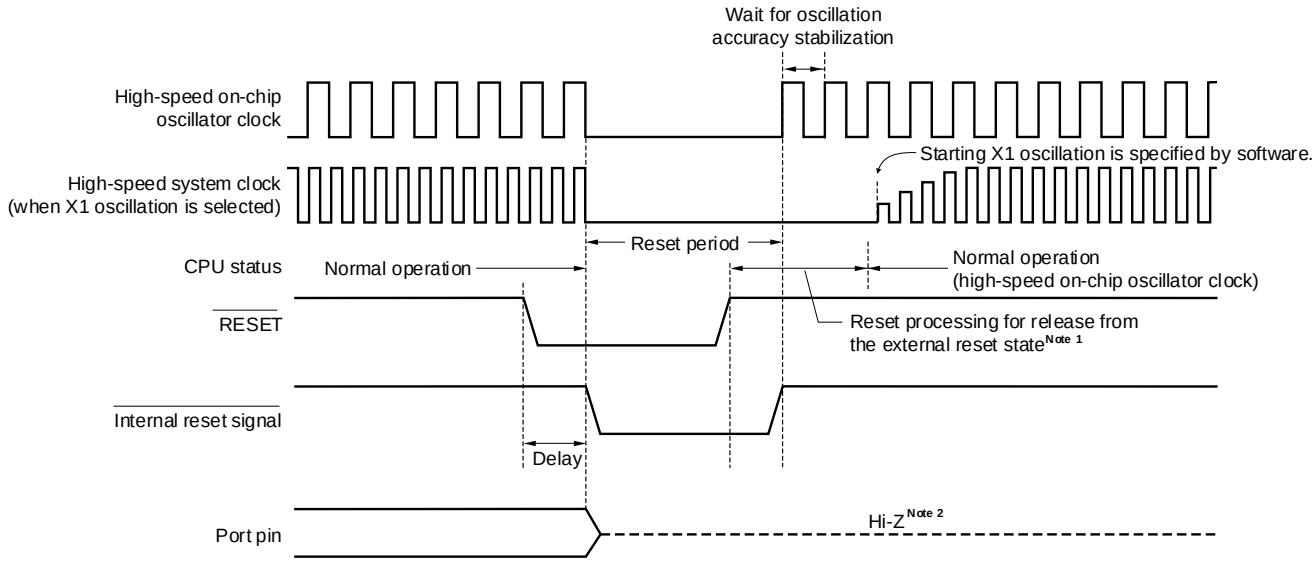

Release from the reset state is automatic in the case of a reset due to a watchdog timer overflow, execution of an illegal instruction, detection of a RAM parity error, or detection of illegal memory access. After reset processing, execution of the program with the high-speed on-chip oscillator clock as the operating clock starts.

Figure 22-3. Timing of Reset Due to Watchdog Timer Overflow, Execution of Illegal Instruction, Detection of RAM Parity Error, or Detection of Illegal Memory Access Overflow

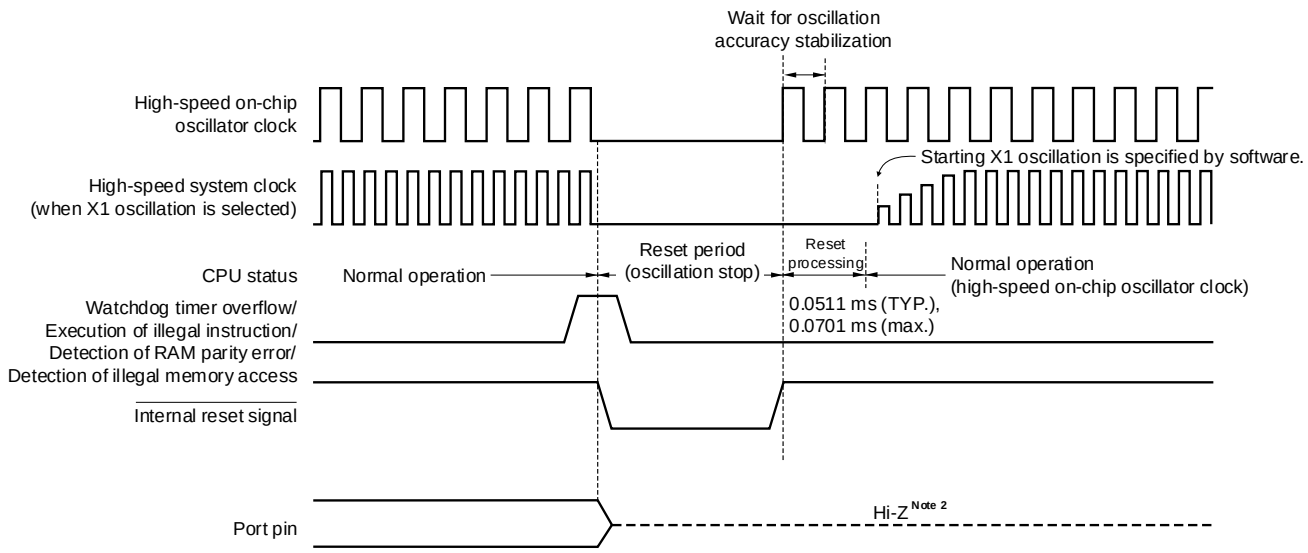

(**Notes** are listed on the next page.)

Notes 1. Reset times (times for release from the external reset state)

After the first release of the POR: 0.672 ms (typ.), 0.832 ms (max.) when the LVD is in use.
0.399 ms (typ.), 0.519 ms (max.) when the LVD is off.

After the second release of the POR: 0.531 ms (typ.), 0.675 ms (max.) when the LVD is in use.
0.259 ms (typ.), 0.362 ms (max.) when the LVD is off.

After power is supplied, a voltage stabilization waiting time of about 0.99 ms (typ.) and up to 2.30 ms (max.) is required before reset processing starts after release of the external reset.

2. The state of P40 is as follows.

- High-impedance during the external reset period or reset period by the POR.
- High level during other types of reset or after receiving a reset signal (connected to the internal pull-up resistor).

Reset by POR and LVD circuit supply voltage detection is automatically released when $V_{DD} \geq V_{POR}$ or $V_{DD} \geq V_{LVD}$ after the reset. After reset processing, execution of the program with the high-speed on-chip oscillator clock as the operating clock starts. For details, see **CHAPTER 23 POWER-ON-RESET CIRCUIT** or **CHAPTER 24 VOLTAGE DETECTOR**.

Remark V_{POR}: POR power supply rise detection voltage
V_{LVD}: LVD detection voltage

22.2 States of Operation During Reset Periods

Table 22-1 shows the states of operation during reset periods. Table 22-2 shows the states of the hardware after receiving a reset signal.

Table 22-1. Operation Statuses During Reset Period

Item			During Reset Period
System clock			Clock supply to the CPU is stopped.
	Main system clock	f_{IH}	Operation stopped
		f_X	Operation stopped (the X1 and X2 pins are input port mode)
		f_{EX}	Clock input invalid (the pin is input port mode)
	Subsystem clock	f_{XT}	Operation possible
		f_{EXS}	Clock input invalid (the pin is input port mode)
	f_{IL}		Operation stopped
CPU			Operation stopped
Code flash memory			Operation stopped
Data flash memory			Operation stopped
RAM			Operation stopped
Port (latch)			High impedance[Note]
Timer array unit			Operation stopped
16-bit timer KB20			
Real-time clock 2			During a reset other than the POR reset: Operation possible During a POR reset: Calendar operation possible; operation of the RTCC0, RTCC1, and SUBCUD registers stops.
12-bit interval timer			Operation stopped
Watchdog timer			
Clock output/buzzer output			
A/D converter			
Comparator			
Serial array unit (SAU)			
Serial interface (IICA)			
LCD controller/driver			
Multiplier & divider, multiply-accumulator			
DMA controller			
Power-on-reset function			Detection operation possible
Voltage detection function			Operation is possible in the case of an LVD reset and stopped in the case of other types of reset.
External interrupt			Operation stopped
Key interrupt function			
CRC operation function	High-speed CRC		
	General-purpose CRC		
RAM parity error detection function			
RAM guard function			
SFR guard function			
Illegal-memory access detection function			

(**Note** and **Remark** are listed on the next page.)

Note High-impedance during the external reset period or reset period by the POR. High level during other types of reset (connected to the on-chip pull-up resistor).

Remark f_{IH}: High-speed on-chip oscillator clock
f_X: X1 oscillation clock
f_{EX}: External main system clock
f_{XT}: XT1 oscillation clock
f_{EXS}: External subsystem clock
f_{IL}: Low-speed on-chip oscillator clock

Table 22-2. State of Hardware After Receiving a Reset Signal

Hardware		After Reset Acknowledgment[Note]
Program counter (PC)		The contents of the reset vector table (00000H, 00001H) are set.
Stack pointer (SP)		Undefined
Program status word (PSW)		06H
RAM	Data memory	Undefined
	General-purpose registers	Undefined

Note During reset signal generation or oscillation stabilization time wait, only the PC contents among the hardware statuses become undefined. All other hardware statuses remain unchanged after reset.

Remark For the state of the special function register (SFR) after receiving a reset signal, see **3.1.4 Special function register (SFR) area** and **3.1.5 Extended special function register (2nd SFR: 2nd Special Function Register) area**.

22.3 Register for Confirming Reset Source

22.3.1 Reset control flag register (RESF)

Many internal reset generation sources exist in the RL78 microcontroller. The reset control flag register (RESF) is used to store which source has generated the reset request.

The RESF register can be read by an 8-bit memory manipulation instruction.

$\overline{\text{RESET}}$ input, reset by power-on-reset (POR) circuit, and reading the RESF register clear TRAP, WDTRF, RPERF, IAWRF, and LVIRF flags.

Figure 22-4. Format of Reset Control Flag Register (RESF)

Address: FFFA8H After reset: Undefined[Note 1] R

Symbol	7	6	5	4	3	2	1	0
RESF	TRAP	0	0	WDTRF	0	RPERF	IAWRF	LVIRF

TRAP	Internal reset request by execution of illegal instruction[Note 2]
0	No internal reset request has been generated, or the RESF register has been cleared.
1	An internal reset request has been generated.

WDTRF	Internal reset request by watchdog timer (WDT)
0	No internal reset request has been generated, or the RESF register has been cleared.
1	An internal reset request has been generated.

RPERF	Internal reset request by RAM parity
0	No internal reset request has been generated, or the RESF register has been cleared.
1	An internal reset request has been generated.

IAWRF	Internal reset request by illegal-memory access
0	No internal reset request has been generated, or the RESF register has been cleared.
1	An internal reset request has been generated.

LVIRF	Internal reset request by voltage detector (LVD)
0	No internal reset request has been generated, or the RESF register has been cleared.
1	An internal reset request has been generated.

Notes 1. The value after reset varies depending on the reset source. See **Table 22-3**.

2. This reset occurs when instruction code FFH is executed.
This reset does not occur during emulation using an in-circuit emulator or an on-chip debugging emulator.

Cautions 1. Do not read data by a 1-bit memory manipulation instruction.

2. When enabling RAM parity error resets (RPERDIS = 0), be sure to initialize the used RAM area at data access or the used RAM area + 10 bytes at execution of instruction from the RAM area. Reset generation enables RAM parity error resets (RPERDIS = 0). For details, see 25.3.3 RAM parity error detection function.

The status of the RESF register when a reset request is generated is shown in Table 22-3.

Table 22-3. RESF Register Status When Reset Request Is Generated

Flag \ Reset Source	$\overline{\text{RESET}}$ Input	Reset by POR	Reset by Execution of Illegal Instruction	Reset by WDT	Reset by RAM Parity Error	Reset by Illegal-Memory Access	Reset by LVD
TRAP bit	Cleared (0)	Cleared (0)	Set (1)	Held	Held	Held	Held
WDTRF bit			Held	Set (1)			
RPERF bit				Held	Set (1)		
IAWRF bit					Held	Set (1)	
LVIRF bit						Held	Set (1)

The RESF register is automatically cleared when it is read by an 8-bit memory manipulation instruction.
Figure 22-6 shows the procedure for checking a reset source.

22.3.2 Power-on-reset status register (PORSR)

The PORSR register is used to check the occurrence of a power-on reset.
Writing 1 to bit 0 (PORF) of the PORSR register enables this function. Writing 0 disables this function.
Write 1 to the PORF bit in advance to enable checking of the occurrence of a power-on reset.
The PORSR register can be set by an 8-bit memory manipulation instruction.
Power-on reset signal generation clears this register to 00H.

Cautions 1. The PORSR register is reset only by a power-on reset; it retains the value when a reset caused by another factor occurs.

2. If the PORF bit is set to 1, it guarantees that no power-on reset has occurred, but it does not guarantee that the RAM value is retained.

Figure 22-5. Format of Power-on-Reset Status Register (PORSR)

Address: F00F9H After reset: 00H R/W

Symbol	7	6	5	4	3	2	1	0
PORSR	0	0	0	0	0	0	0	PORF

PORF	Checking occurrence of power-on reset
0	A value 1 has not been written, or a power-on reset has occurred.
1	No power-on reset has occurred.

Figure 22-6 shows the procedure for checking a reset source.

Figure 22-6. Example of Procedure for Checking Reset Source

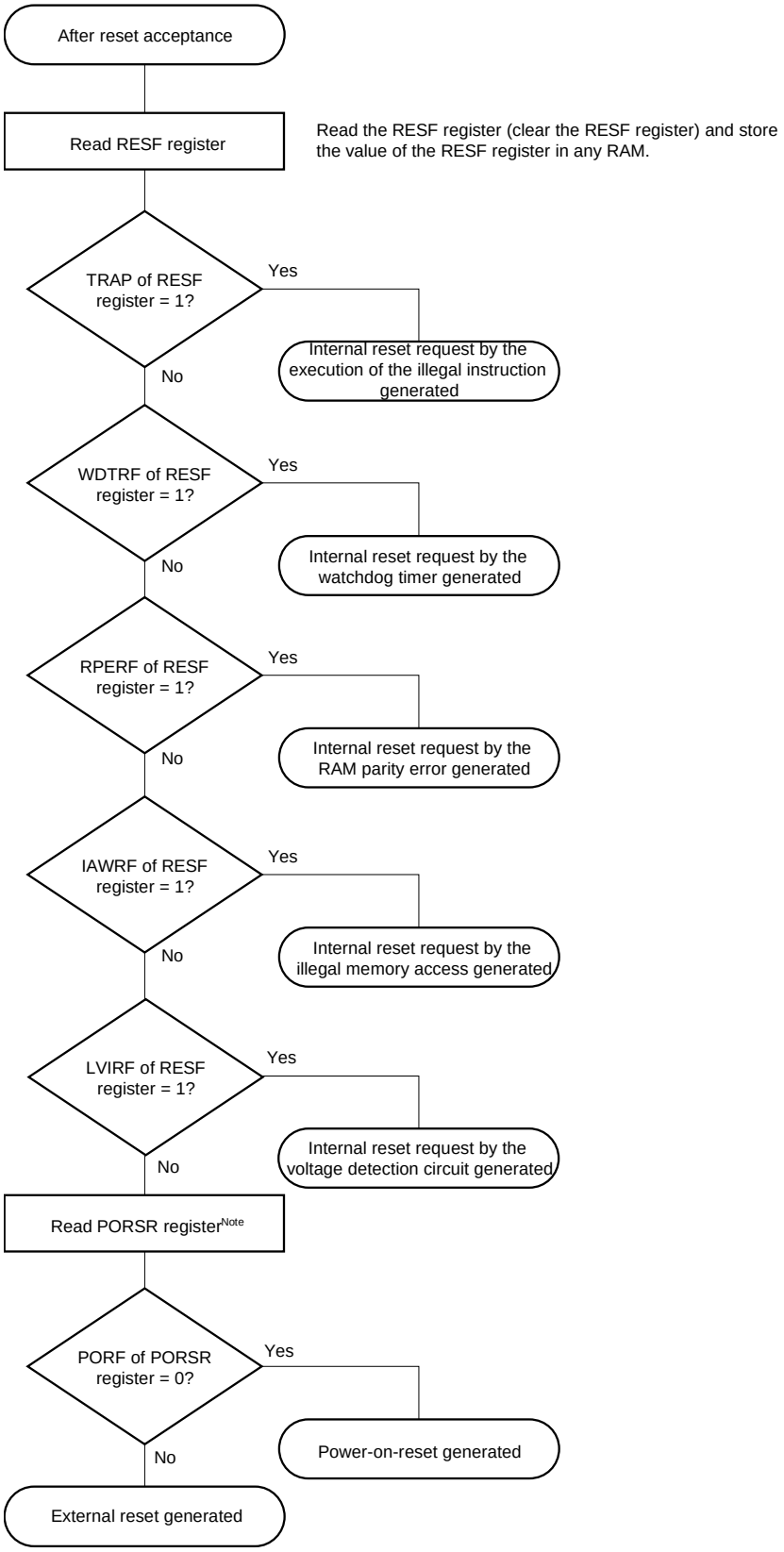

Note Writing “1” to bit 0 (PORF) of the PORSR register before receiving a reset signal.

The flow described above is an example of the procedure for checking.

CHAPTER 23 POWER-ON-RESET CIRCUIT

23.1 Functions of Power-on-reset Circuit

The power-on-reset circuit (POR) has the following functions.

- Generates internal reset signal at power on.
  The reset signal is released when the supply voltage (V_{DD}) exceeds the detection voltage (V_{POR}). Note that the reset state must be retained until the operating voltage becomes in the range defined in **32.4** or **33.4 AC Characteristics**. This is done by utilizing the voltage detector or controlling the externally input reset signal.

- Compares supply voltage (V_{DD}) and detection voltage (V_{PDR}), generates internal reset signal when $V_{DD} < V_{PDR}$. Note that, after power is supplied, this LSI should be placed in the STOP mode, or in the reset state by utilizing the voltage detector or externally input reset signal, before the operation voltage falls below the range defined in **32.4** or **33.4 AC Characteristics**. When restarting the operation, make sure that the operation voltage has returned within the range of operation.

Caution If an internal reset signal is generated in the power-on-reset circuit, the reset control flag register (RESF) and power-on-reset status register (PORSR) are cleared.

Remarks 1. The RL78/L13 incorporates multiple hardware functions that generate an internal reset signal. A flag that indicates the reset source is located in the reset control flag register (RESF) for when an internal reset signal is generated by the watchdog timer (WDT), voltage detector (LVD), illegal instruction execution, RAM parity error, or illegal-memory access. The RESF register is not cleared to 00H and the flag is set to 1 when an internal reset signal is generated by the watchdog timer (WDT), voltage detector (LVD), illegal instruction execution, RAM parity error, or illegal-memory access.
For details of the RESF register, see **CHAPTER 22 RESET FUNCTION**.

2. Whether an internal reset has been generated by the power-on reset circuit can be checked by using the power-on-reset status register (PORSR). For details of the PORSR register, see **CHAPTER 22 RESET FUNCTION**.

23.2 Configuration of Power-on-reset Circuit

The block diagram of the power-on-reset circuit is shown in Figure 23-1.

Figure 23-1. Block Diagram of Power-on-reset Circuit

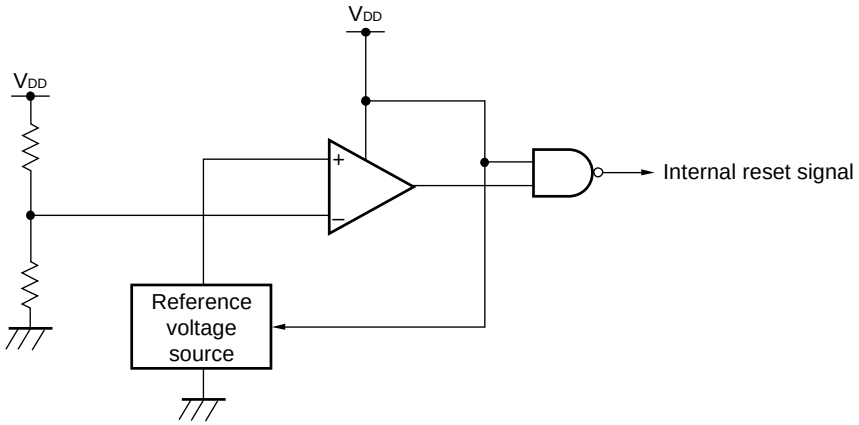

23.3 Operation of Power-on-reset Circuit

The timing of generation of the internal reset signal by the power-on-reset circuit and voltage detector is shown below.

Figure 23-2. Timing of Generation of Internal Reset Signal by Power-on-reset Circuit and Voltage Detector (1/3)

(1) When the externally input reset signal on the $\overline{\text{RESET}}$ pin is used

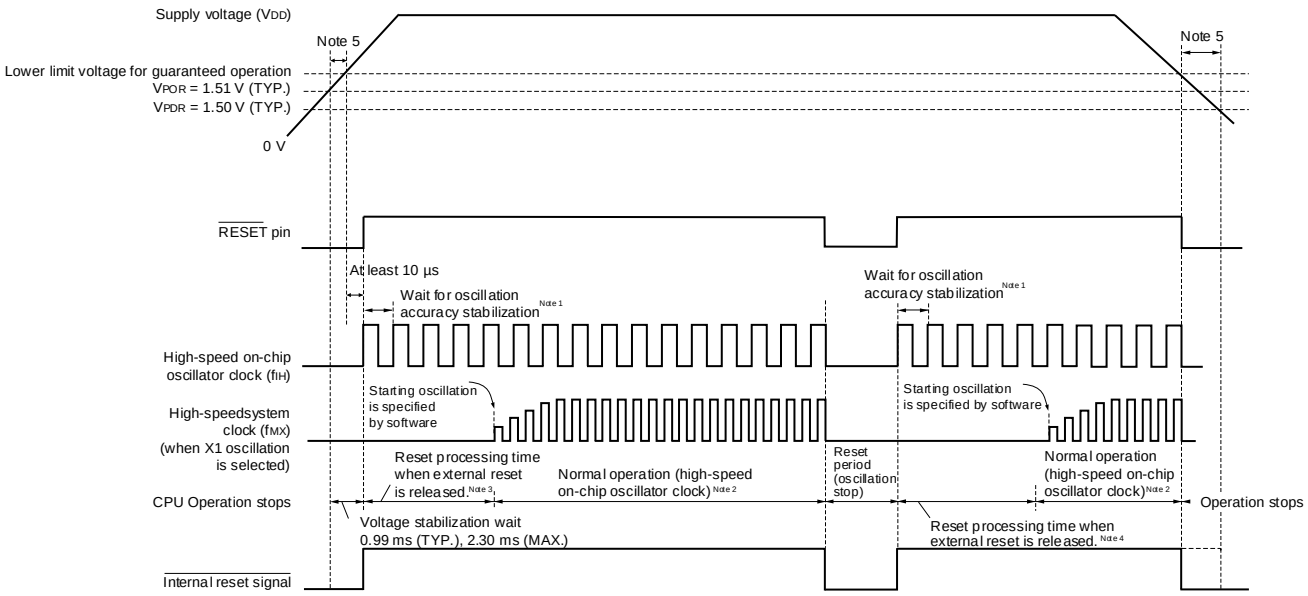

Notes 1. The internal reset processing time includes the oscillation accuracy stabilization time of the high-speed on-chip oscillator clock.

2. The high-speed on-chip oscillator clock and a high-speed system clock or subsystem clock can be selected as the CPU clock. To use the X1 clock, use the oscillation stabilization time counter status register (OSTC)

to confirm the lapse of the oscillation stabilization time. To use the XT1 clock, use the timer function for confirmation of the lapse of the stabilization time.

Notes 3. The time until normal operation starts includes the following reset processing time when the external reset is released (release from the first external reset following release from the POR state) after the $\overline{\text{RESET}}$ signal is driven high (1) as well as the voltage stabilization wait time after VPOR (1.51 V, typ.) is reached.
Reset processing time when the external reset is released is shown below.
Release from the first external reset following release from the POR state:
0.672 ms (typ.), 0.832 ms (max.) (when the LVD is in use)
0.399 ms (typ.), 0.519 ms (max.) (when the LVD is off)

4. Reset times in cases of release from an external reset other than the above are listed below.
Release from the reset state for external resets other than the above case:
0.531 ms (typ.), 0.675 ms (max.) (when the LVD is in use)
0.259 ms (typ.), 0.362 ms (max.) (when the LVD is off)

5. After power is supplied, the reset state must be retained until the operating voltage becomes in the range defined in **32.4** or **33.4 AC Characteristics**. This is done by controlling the externally input reset signal. After power supply is turned off, this LSI should be placed in the STOP mode, or in the reset state by utilizing the voltage detector or externally input reset signal, before the voltage falls below the operating range. When restarting the operation, make sure that the operation voltage has returned within the range of operation.

Caution For power-on reset, be sure to use the externally input reset signal on the $\overline{\text{RESET}}$ pin when the LVD is off. For details, see CHAPTER 24 VOLTAGE DETECTOR.

Remark V_{POR}: POR power supply rise detection voltage
V_{PDR}: POR power supply fall detection voltage

Figure 23-2. Timing of Generation of Internal Reset Signal by Power-on-reset Circuit and Voltage Detector (2/3)

(2) When LVD is in interrupt & reset mode (option byte 000C1H: LVIMDS1, LVIMDS0 = 1, 0)

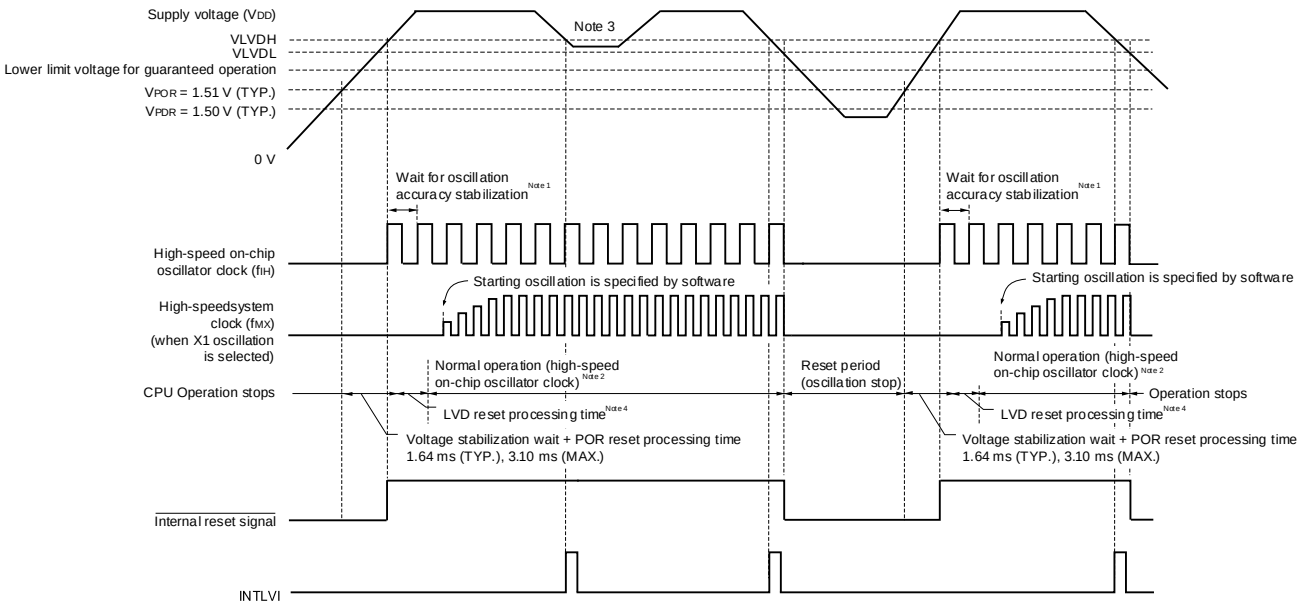

Notes 1. The internal reset processing time includes the oscillation accuracy stabilization time of the high-speed on-chip oscillator clock.

2. The high-speed on-chip oscillator clock and a high-speed system clock or subsystem clock can be selected as the CPU clock. To use the X1 clock, use the oscillation stabilization time counter status register (OSTC) to confirm the lapse of the oscillation stabilization time. To use the XT1 clock, use the timer function for confirmation of the lapse of the stabilization time.

3. After the interrupt request signal (INTLVI) is generated, the LVILV and LVIMD bits of the voltage detection level register (LVIS) are automatically set to 1. After INTLVI is generated, appropriate settings should be made according to **Figure 24 - 8 Setting Procedure for Operating Voltage Check and Reset** and **Figure 24 - 9 Setting Procedure for Initial Setting of Interrupt and Reset Mode**, taking into consideration that the supply voltage might return to the high-voltage detection level (V_{LVDH}) or higher without falling below the low-voltage detection level (V_{LVDL}).

4. The time until normal operation starts includes the following LVD reset processing time after the LVD detection level (V_{LVDH}) is reached as well as the voltage stabilization wait + POR reset processing time after the V_{POR} (1.51 V, typ.) is reached.
LVD reset processing time: 0 ms to 0.0701 ms (max.)

Remark V_{LVDH}, V_{LVDL}: LVD detection voltage
V_{POR}: POR power supply rise detection voltage
V_{PDR}: POR power supply fall detection voltage

Figure 23-2. Timing of Generation of Internal Reset Signal by Power-on-reset Circuit and Voltage Detector (3/3)

(3) LVD reset mode (option byte 000C1H: LVIMDS1 = 1, LVIMDS0 = 1)

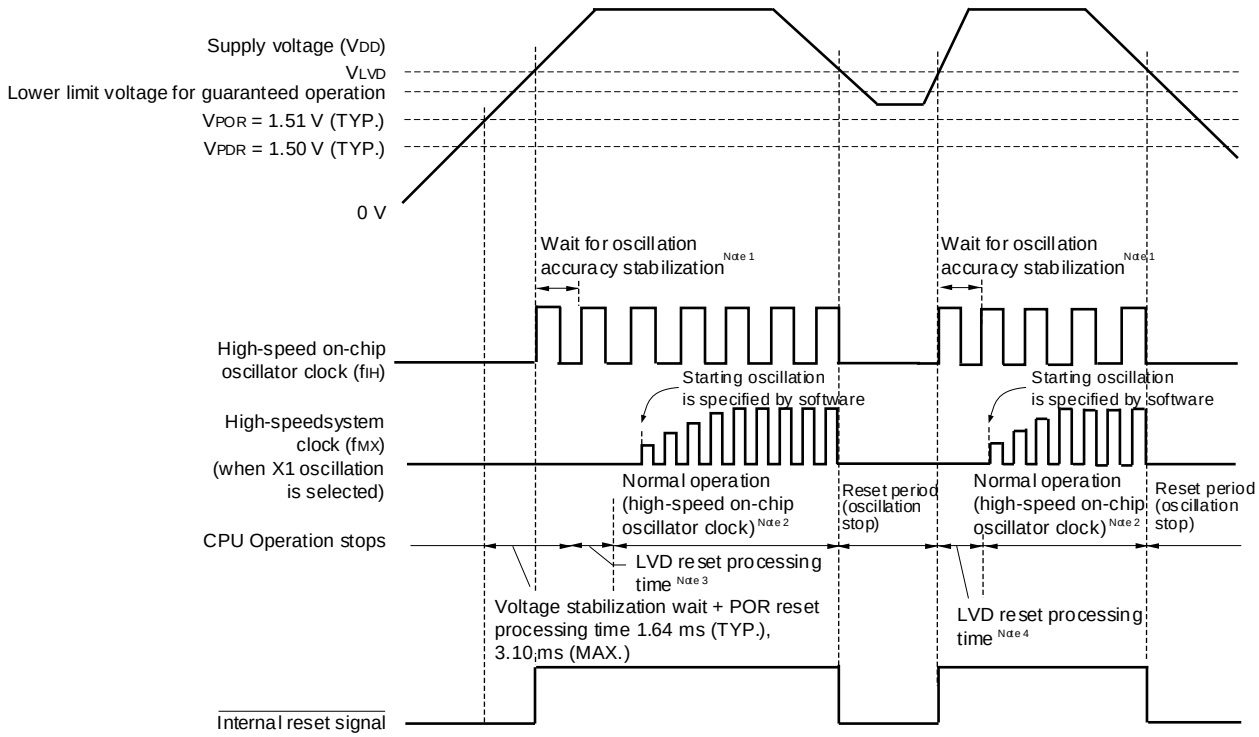

Notes 1. The internal reset processing time includes the oscillation accuracy stabilization time of the high-speed on-chip oscillator clock.

2. The high-speed on-chip oscillator clock and a high-speed system clock or subsystem clock can be selected as the CPU clock. To use the X1 clock, use the oscillation stabilization time counter status register (OSTC) to confirm the lapse of the oscillation stabilization time. To use the XT1 clock, use the timer function for confirmation of the lapse of the stabilization time.

3. The time until normal operation starts includes the following LVD reset processing time after the LVD detection level (V_{LVD}) is reached as well as the voltage stabilization wait + POR reset processing time after the V_{POR} (1.51 V, typ.) is reached.
LVD reset processing time: 0 ms to 0.0701 ms (max.)

4. When the power supply voltage is below the lower limit for operation and the power supply voltage is then restored after an internal reset is generated only by the voltage detector (LVD), the following LVD reset processing time is required after the LVD detection level (V_{LVD}) is reached.
LVD reset processing time: 0.0511 ms (typ.), 0.0701 ms (max.)

Remarks 1. V_{LVDH}, V_{LVDL}: LVD detection voltage
V_{POR}: POR power supply rise detection voltage
V_{PDR}: POR power supply fall detection voltage

2. When the LVD interrupt mode is selected (option byte 000C1H: LVIMD1 = 0, LVIMD0 = 1), the time until normal operation starts after power is turned on is the same as the time specified in Note 3 of Figure 23-2 (3).

CHAPTER 24 VOLTAGE DETECTOR

24.1 Functions of Voltage Detector

The operation mode and detection voltages (V_{LVDH}, V_{LVDL}, V_{LVD}) for the voltage detector is set by using the option byte (000C1H).

The voltage detector (LVD) has the following functions.

- The LVD circuit compares the supply voltage (V_{DD}) with the detection voltage (V_{LVDH}, V_{LVDL}, V_{LVD}), and generates an internal reset or internal interrupt signal.
- The detection level for the power supply detection voltage (V_{LVDH}, V_{LVDL}, V_{LVD}) can be selected by using the option byte as one of 14 levels (For details, see **CHAPTER 27 OPTION BYTE**).
- Operable in STOP mode.
- After power is supplied, the reset state must be retained until the operating voltage becomes in the range defined in **32.4** or **34.4 AC Characteristics**. This is done by utilizing the voltage detector or controlling the externally input reset signal. After the power supply is turned off, this LSI should be placed in the STOP mode, or placed in the reset state by utilizing the voltage detection circuit or controlling the externally input reset signal before the voltage falls below the operating range. The range of operating voltage varies with the setting of the user option byte (000C2H or 010C2H).

(a) Interrupt & reset mode (option byte LVIMDS1, LVIMDS0 = 1, 0)
The two detection voltages (V_{LVDH}, V_{LVDL}) are selected by the option byte 000C1H. The high-voltage detection level (V_{LVDH}) is used for releasing resets and generating interrupts. The low-voltage detection level (V_{LVDL}) is used for generating resets.

(b) Reset mode (option byte LVIMDS1, LVIMDS0 = 1, 1)
The detection voltage (V_{LVD}) selected by the option byte 000C1H is used for generating/releasing resets.

(c) Interrupt mode (option byte LVIMDS1, LVIMDS0 = 0, 1)
The detection voltage (V_{LVD}) selected by the option byte 000C1H is used for releasing resets/generating interrupts.

The interrupt signals and internal reset signals are generated in each mode as follows.

Interrupt & Reset Mode (LVIMDS1, LVIMDS0 = 1, 0)	Reset Mode (LVIMDS1, LVIMDS0 = 1, 1)	Interrupt Mode (LVIMDS1, LVIMDS0 = 0, 1)
Generates an interrupt request signal by detecting $V_{DD} < V_{LVDH}$ when the operating voltage falls, and releases an internal reset by detecting $V_{DD} < V_{LVDH}$. Releases an internal reset by detecting $V_{DD} \geq V_{LVDH}$.	Releases an internal reset by detecting $V_{DD} \geq V_{LVD}$. Generates an internal reset by detecting $V_{DD} < V_{LVD}$.	Retains the state of an internal reset by the LVD immediately after a reset until $V_{DD} \geq V_{LVD}$. Releases the LVD internal reset by detecting $V_{DD} \geq V_{LVD}$. Generates an interrupt request signal (INTLVI) by detecting $V_{DD} < V_{LVD}$ or $V_{DD} \geq V_{LVD}$ after the LVD internal reset is released.

While the voltage detector is operating, whether the supply voltage or the input voltage from an external input pin is more than or less than the detection level can be checked by reading the voltage detection flag (LVIF: bit 0 of the voltage detection register (LVIM)).

Bit 0 (LVIRF) of the reset control flag register (RESF) is set to 1 if reset occurs. For details of the RESF register, see **CHAPTER 22 RESET FUNCTION**.ssss

24.2 Configuration of Voltage Detector

The block diagram of the voltage detector is shown in Figure 24-1.

Figure 24-1. Block Diagram of Voltage Detector

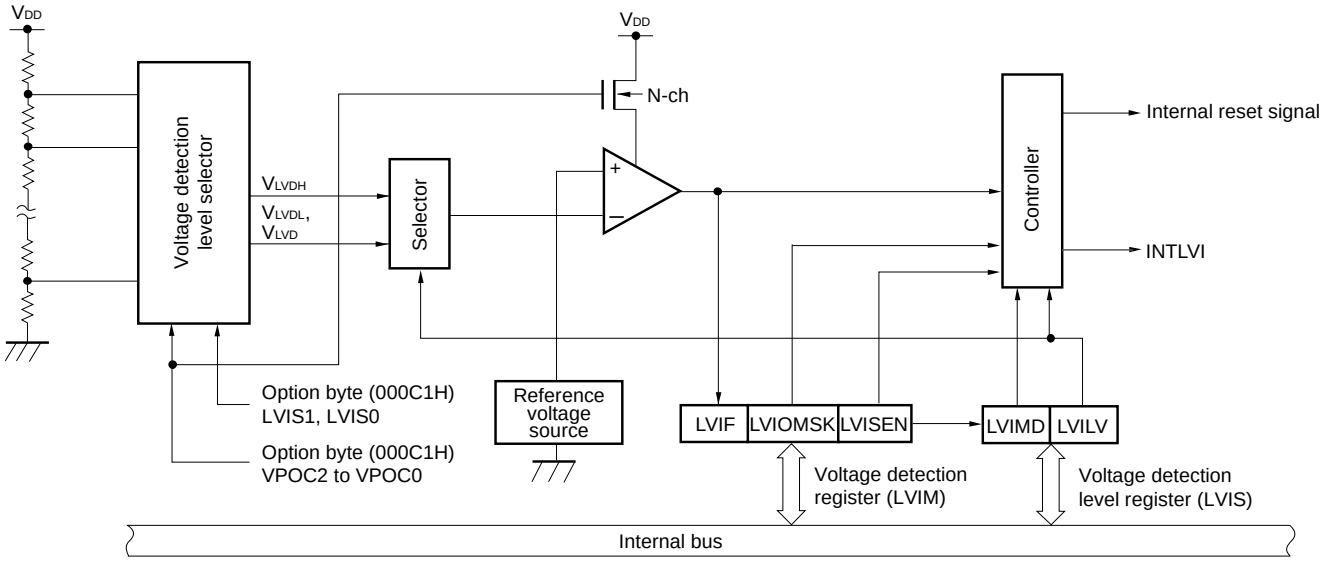

24.3 Registers Controlling Voltage Detector

The voltage detector is controlled by the following registers.

- Voltage detection register (LVIM)
- Voltage detection level register (LVIS)

24.3.1 Voltage detection register (LVIM)

This register is used to specify whether to enable or disable rewriting the voltage detection level register (LVIS), as well as to check the LVD output mask status.

This register can be set by a 1-bit or 8-bit memory manipulation instruction.

Reset signal generation clears this register to 00H.

Figure 24-2. Format of Voltage Detection Register (LVIM)

Address: FFFA9H After reset: 00H[Note 1] R/W[Note 2]

Symbol	<7>	6	5	4	3	2	<1>	<0>
LVIM	LVISEN[Note 3]	0	0	0	0	0	LVIOMSK	LVIF

LVISEN[Note 3]	Specification of whether to enable or disable rewriting the voltage detection level register (LVIS)
0	Disabling of rewriting the LVIS register (LVIOMSK = 0 (Mask of LVD output is invalid))
1	Enabling of rewriting the LVIS register (LVIOMSK = 1 (Mask of LVD output is valid))

LVIOMSK	Mask status flag of LVD output
0	Mask of LVD output is invalid
1	Mask of LVD output is valid[Note 4]

LVIF	Voltage detection flag
0	Supply voltage (V_{DD}) ≥ detection voltage (V_{LVD}), or when LVD is off
1	Supply voltage (V_{DD}) < detection voltage (V_{LVD})

Notes 1. The reset value changes depending on the reset source.
If the LVIS register is reset by LVD, it is not reset but holds the current value. In other reset, LVISEN is cleared to 0.

2. Bits 0 and 1 are read-only.

3. This can be set only in the interrupt & reset mode (option byte LVIMDS1, LVIMDS0 = 1, 0). Do not change the initial value in other modes.

4. LVIOMSK bit is automatically set to “1” only in the interrupt & reset mode (option byte LVIMDS1, LVIMDS0 = 1, 0) and reset or interrupt by LVD is masked.

- Period during LVISEN = 1
- Waiting period from the time when LVD interrupt is generated until LVD detection voltage becomes stable
- Waiting period from the time when the value of LVILV bit changes until LVD detection voltage becomes stable

24.3.2 Voltage detection level register (LVIS)

This register selects the voltage detection level.

This register can be set by a 1-bit or 8-bit memory manipulation instruction.

Reset signal generation sets this register to 00H/01H/81H[Note 1].

Figure 24-3. Format of Voltage Detection Level Select Register (LVIS)

Address: FFFAAH After reset: 00H/01H/81H[Note 1] R/W

Symbol	<7>	6	5	4	3	2	1	<0>
LVIS	LVIMD	0	0	0	0	0	0	LVILV

LVIMD[Note 2]	Operation mode of voltage detection
0	Interrupt mode
1	Reset mode

LVILV[Note 2]	LVD detection level
0	High-voltage detection level (V_{LVDH})
1	Low-voltage detection level (V_{LVDL} or V_{LVD})

Notes 1. The reset value changes depending on the reset source and the setting of the option byte.
This register is not cleared (00H) by LVD reset.
The generation of reset signal other than an LVD reset sets as follows.
- When option byte LVIMDS1, LVIMDS0 = 1, 0: 00H
- When option byte LVIMDS1, LVIMDS0 = 1, 1: 81H
- When option byte LVIMDS1, LVIMDS0 = 0, 1: 01H

2. Writing “0” can only be allowed in the interrupt & reset mode (option byte LVIMDS1, LVIMDS0 = 1, 0). Do not set LVIMD and LVILV in other cases. The value is switched automatically when reset or interrupt is generated in the interrupt & reset mode.

Cautions 1. Rewrite the value of the LVIS register according to Figures 24-8.

2. Specify the LVD operation mode and detection voltage (V_{LVDH}, V_{LVDL}, V_{LVD}) of each mode by using the option byte 000C1H. Figure 24-4 shows the format of the user option byte (000C1H/010C1H). For details about the option byte, see CHAPTER 27 OPTION BYTE.

Figure 24-4. LVD Operation Mode and Detection Voltage Settings for User Option Byte (000C1H) (1/2)

Address: 000C1H/010C1H[Note]

7	6	5	4	3	2	1	0
VPOC2	VPOC1	VPOC0	1	LVIS1	LVIS0	LVIMDS1	LVIMDS0

- LVD setting (interrupt & reset mode)

Detection voltage			Option byte setting value						
V_{LVDH}		V_{LVDL}	VPOC2	VPOC1	VPOC0	LVIS1	LVIS0	Mode setting	
Rising edge	Falling edge	Falling edge						LVIMDS1	LVIMDS0
1.77 V	1.73 V	1.63 V	0	0	0	1	0	1	0
1.88 V	1.84 V					0	1		
2.92 V	2.86 V					0	0		
1.98 V	1.94 V	1.84 V		0	1	1	0		
2.09 V	2.04 V					0	1		
3.13 V	3.06 V					0	0		
2.61 V	2.55 V	2.45 V		1	0	1	0		
2.71 V	2.65 V					0	1		
3.75 V	3.67 V					0	0		
2.92 V	2.86 V	2.75 V		1	1	1	0		
3.02 V	2.96 V					0	1		
4.06 V	3.98 V					0	0		
–			Setting of values other than above is prohibited.						

- LVD setting (reset mode)

Detection voltage		Option byte setting value						
V_{LVD}		VPOC2	VPOC1	VPOC0	LVIS1	LVIS0	Mode setting	
Rising edge	Falling edge						LVIMDS1	LVIMDS0
1.67 V	1.63 V	0	0	0	1	1	1	1
1.77 V	1.73 V		0	0	1	0		
1.88 V	1.84 V		0	1	1	1		
1.98 V	1.94 V		0	1	1	0		
2.09 V	2.04 V		0	1	0	1		
2.50 V	2.45 V		1	0	1	1		
2.61 V	2.55 V		1	0	1	0		
2.71 V	2.65 V		1	0	0	1		
2.81 V	2.75 V		1	1	1	1		
2.92 V	2.86 V		1	1	1	0		
3.02 V	2.96 V		1	1	0	1		
3.13 V	3.06 V		0	1	0	0		
3.75 V	3.67 V		1	0	0	0		
4.06 V	3.98 V		1	1	0	0		
–		Setting of values other than above is prohibited.						

Note Set the same value as 000C1H to 010C1H when the boot swap operation is used because 000C1H is replaced by 010C1H.

Remark The detection voltage is a TYP. value. For details, see **32.6.5** or **33.6.5 LVD circuit characteristics**.

Figure 24-4. LVD Operation Mode and Detection Voltage Settings for User Option Byte (000C1H) (2/2)

Address: 000C1H/010C1H[Note]

7	6	5	4	3	2	1	0
VPOC2	VPOC1	VPOC0	1	LVIS1	LVIS0	LVIMDS1	LVIMDS0

● LVD setting (interrupt mode)

Detection voltage		Option byte setting value						
V_{LVD}		VPOC2	VPOC1	VPOC0	LVIS1	LVIS0	Mode setting	
Rising edge	Falling edge						LVIMDS1	LVIMDS0
1.67 V	1.63 V	0	0	0	1	1	0	1
1.77 V	1.73 V		0	0	1	0		
1.88 V	1.84 V		0	1	1	1		
1.98 V	1.94 V		0	1	1	0		
2.09 V	2.04 V		0	1	0	1		
2.50 V	2.45 V		1	0	1	1		
2.61 V	2.55 V		1	0	1	0		
2.71 V	2.65 V		1	0	0	1		
2.81 V	2.75 V		1	1	1	1		
2.92 V	2.86 V		1	1	1	0		
3.02 V	2.96 V		1	1	0	1		
3.13 V	3.06 V		0	1	0	0		
3.75 V	3.67 V		1	0	0	0		
4.06 V	3.98 V		1	1	0	0		
–		Setting of values other than above is prohibited.						

● LVD off (use of external reset input via $\overline{\text{RESET}}$ pin)

Detection voltage		Option byte setting value						
V_{LVD}		VPOC2	VPOC1	VPOC0	LVIS1	LVIS0	Mode setting	
Rising edge	Falling edge						LVIMDS1	LVIMDS0
–	–	1	×	×	×	×	×	1
–		Setting of values other than above is prohibited.						

Note Set the same value as 000C1H to 010C1H when the boot swap operation is used because 000C1H is replaced by 010C1H.

Cautions 1. Be sure to set bit 4 to 1.

2. After power is supplied, the reset state must be retained until the operating voltage becomes in the range defined in 32.4 or 33.4 AC Characteristics. This is done by utilizing the voltage detection circuit or controlling the externally input reset signal. After the power supply is turned off, this LSI should be placed in the STOP mode, or placed in the reset state by utilizing the voltage detection circuit or controlling the externally input reset signal, before the voltage falls below the operating range.

The range of operating voltage varies with the setting of the user option byte (000C2H or 010C2H).

Remarks 1. ×: don't care

2. The detection voltage is a TYP. value. For details, see **32.6.5** or **33.6.5 LVD circuit characteristics**.

24.4 Operation of Voltage Detector

24.4.1 When used as reset mode

Specify the operation mode (the reset mode (LVIMDS1, LVIMDS0 = 1, 1)) and the detection voltage (V_{LVD}) by using the option byte 000C1H.

The operation is started in the following initial setting state when the reset mode is set.

- Bit 7 (LVISEN) of the voltage detection register (LVIM) is set to 0 (disable rewriting of voltage detection level register (LVIS))
- The initial value of the voltage detection level select register (LVIS) is set to 81H.
  Bit 7 (LVIMD) is 1 (reset mode).
  Bit 0 (LVILV) is 1 (low-voltage detection level: V_{LVD}).

- Operation in LVD reset mode
  In the reset mode (option byte LVIMDS1, LVIMDS0 = 1, 1), the state of an internal reset by LVD is retained until the supply voltage (V_{DD}) exceeds the voltage detection level (V_{LVD}) after power is supplied. The internal reset is released when the supply voltage (V_{DD}) exceeds the voltage detection level (V_{LVD}).
  At the fall of the operating voltage, an internal reset by LVD is generated when the supply voltage (V_{DD}) falls below the voltage detection level (V_{LVD})

Figure 24-5 shows the timing of the internal reset signal generated in the LVD reset mode.

Figure 24-5. Timing of Voltage Detector Internal Reset Signal Generation
(Option Byte LVIMDS1, LVIMDS0 = 1, 1)

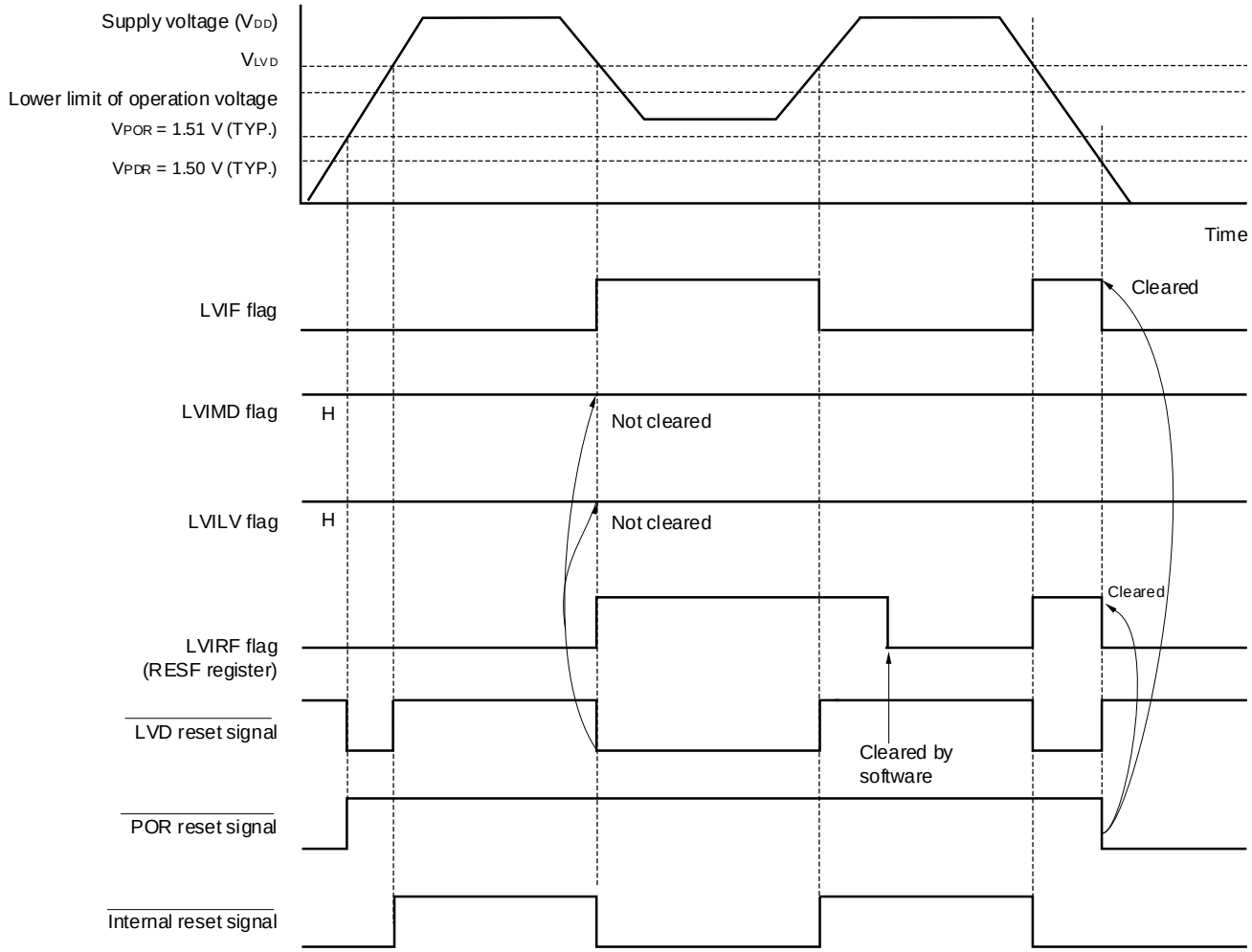

Remark V_{POR}: POR power supply rise detection voltage
V_{PDR}: POR power supply fall detection voltage

24.4.2 When used as interrupt mode

Specify the operation mode (the interrupt mode (LVIMDS1, LVIMDS0 = 0, 1)) and the detection voltage (V_{LVD}) by using the option byte 000C1H.

The operation is started in the following initial setting state when the interrupt mode is set.

- Bit 7 (LVISEN) of the voltage detection register (LVIM) is set to 0 (disable rewriting of voltage detection level register (LVIS))
- The initial value of the voltage detection level select register (LVIS) is set to 01H.
  Bit 7 (LVIMD) is 0 (interrupt mode).
  Bit 0 (LVILV) is 1 (low-voltage detection level: V_{LVD}).

- Operation in LVD interrupt mode
  The state of an internal reset by LVD is retained until $V_{DD} \geq V_{LVD}$ immediately after reset generation. The internal reset is released when $V_{DD} \geq V_{LVD}$ is detected.
  After that, an interrupt request signal (INTLVI) is generated when $V_{DD} < V_{LVD}$ or $V_{DD} \geq V_{LVD}$ is detected.

  Figure 24-6 shows the timing of the interrupt request signal generated in the LVD interrupt mode.

Figure 24-6. Timing of Voltage Detector Internal Interrupt Signal Generation (Option Byte LVIMDS1, LVIMDS0 = 0, 1)

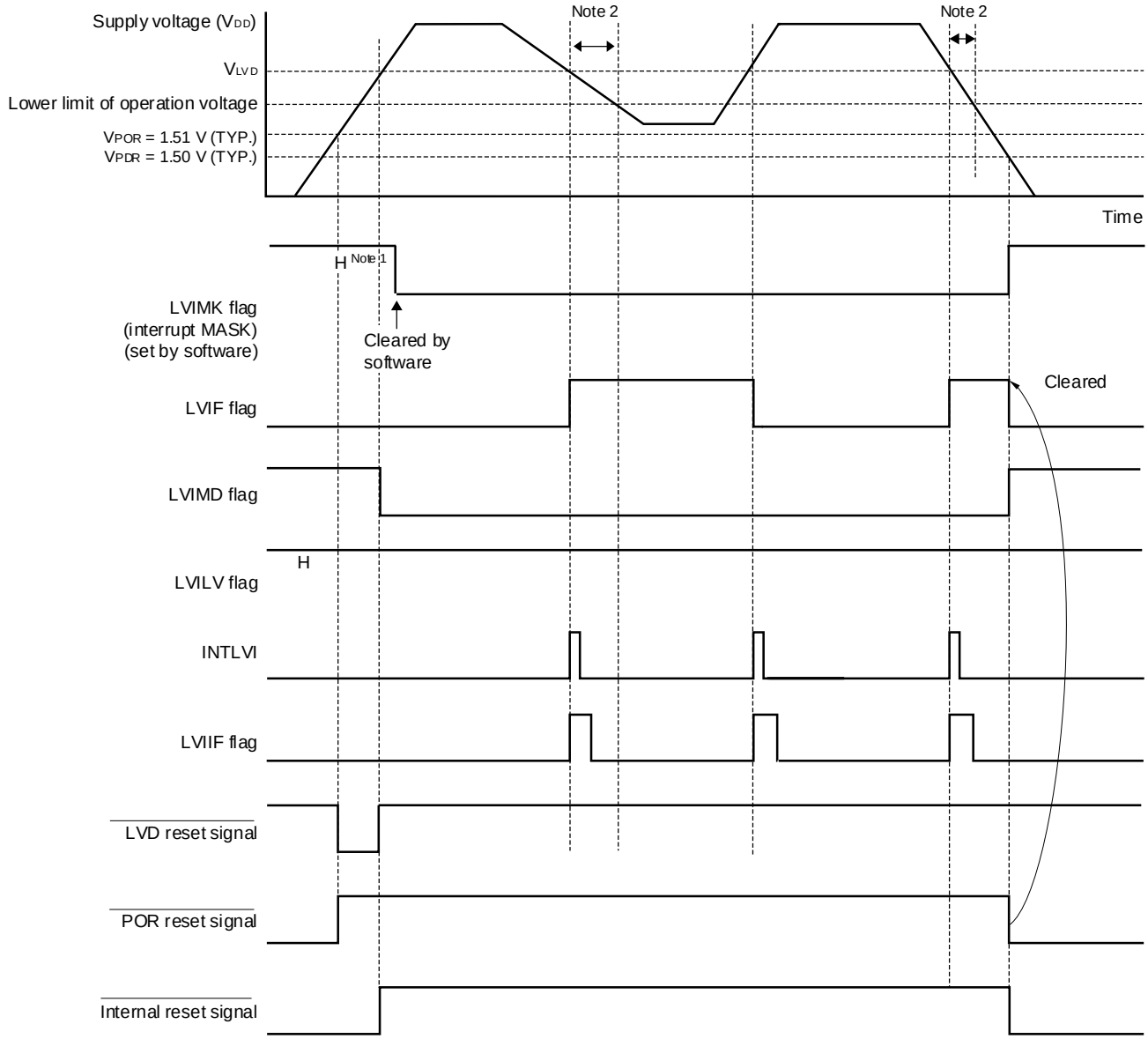

Notes 1. The LVIMK flag is set to “1” by reset signal generation.

2. When the voltage falls, this LSI should be placed in the STOP mode, or placed in the reset state by controlling the externally input reset signal, before the voltage falls below the operating voltage range defined in **32.4** or **33.4 AC Characteristics**. When restarting the operation, make sure that the operation voltage has returned within the range of operation.

Remark V_{POR}: POR power supply rise detection voltage

V_{PDR}: POR power supply fall detection voltage

24.4.3 When used as interrupt and reset mode

Specify the operation mode (the interrupt and reset (LVIMDS1, LVIMDS0 = 1, 0)) and the detection voltage (V_{LVDH}, V_{LVDL}) by using the option byte 000C1H.

The operation is started in the following initial setting state when the interrupt & reset mode is set.

- Bit 7 (LVISEN) of the voltage detection register (LVIM) is set to 0 (disable rewriting of voltage detection level register (LVIS))
- The initial value of the voltage detection level select register (LVIS) is set to 00H.
  Bit 7 (LVIMD) is 0 (interrupt mode).
  Bit 0 (LVILV) is 0 (high-voltage detection level: V_{LVDH}).

- Operation in LVD interrupt & reset mode
  In the interrupt & reset mode (option byte LVIMDS1, LVIMDS0 = 1, 0), the state of an internal reset by LVD is retained until the supply voltage (V_{DD}) exceeds the high-voltage detection level (V_{LVDH}) after power is supplied.
  The internal reset is released when the supply voltage (V_{DD}) exceeds the high-voltage detection level (V_{LVDH}).
  An interrupt request signal by LVD (INTLVI) is generated and arbitrary save processing is performed when the supply voltage (V_{DD}) falls below the high-voltage detection level (V_{LVDH}). After that, an internal reset by LVD is generated when the supply voltage (V_{DD}) falls below the low-voltage detection level (V_{LVDL}). After INTLVI is generated, an interrupt request signal is not generated even if the supply voltage becomes equal to or higher than the high-voltage detection voltage (V_{LVDH}) without falling below the low-voltage detection voltage (V_{LVDL}).
  To use the LVD reset & interrupt mode, follow the procedure in **Figure 24-8 Setting Procedure for Operating Voltage Check and Reset** and **Figure 24-9 Setting Procedure for Initial Setting of Interrupt and Reset Mode**.

Figure 24-7 shows the timing of the internal reset signal and interrupt signal generated in the LVD interrupt & reset mode.

Figure 24-7. Timing of Voltage Detector Reset Signal and Interrupt Signal Generation (Option Byte LVIMDS1, LVIMDS0 = 1, 0) (1/2)

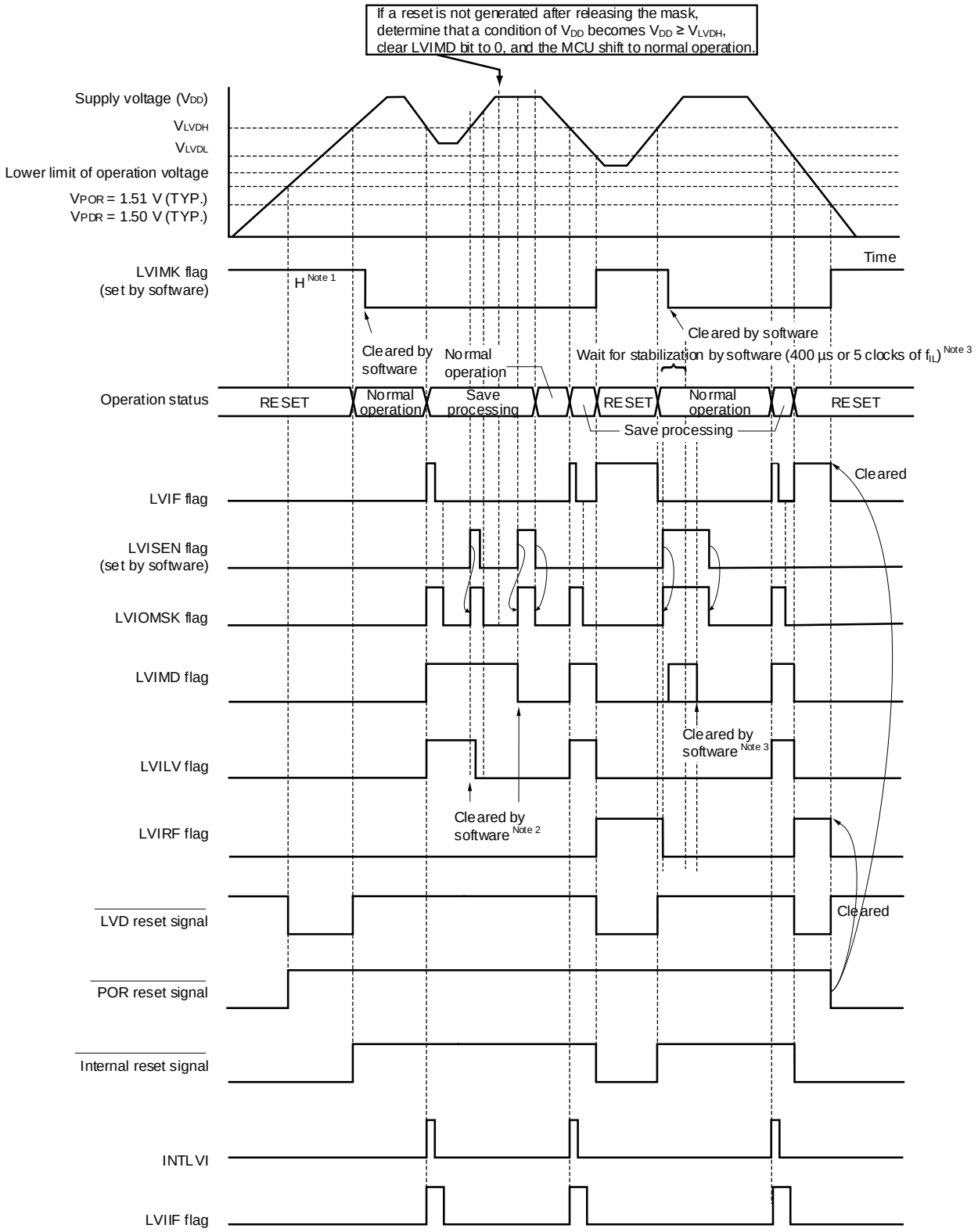

(**Notes** and **Remark** are listed on the next page.)

Notes 1. The LVIMK flag is set to “1” by reset signal generation.

2. After an interrupt is generated, follow the procedure in **Figure 24-8 Setting Procedure for Operating Voltage Check and Reset** in interrupt and reset mode.

3. After a reset is released, follow the procedure in **Figure 24-9 Initial Setting of Interrupt and Reset Mode**.

Remark V_{POR}: POR power supply rise detection voltage

V_{PDR}: POR power supply fall detection voltage

Figure 24-7. Timing of Voltage Detector Reset Signal and Interrupt Signal Generation (Option Byte LVIMDS1, LVIMDS0 = 1, 0) (2/2)

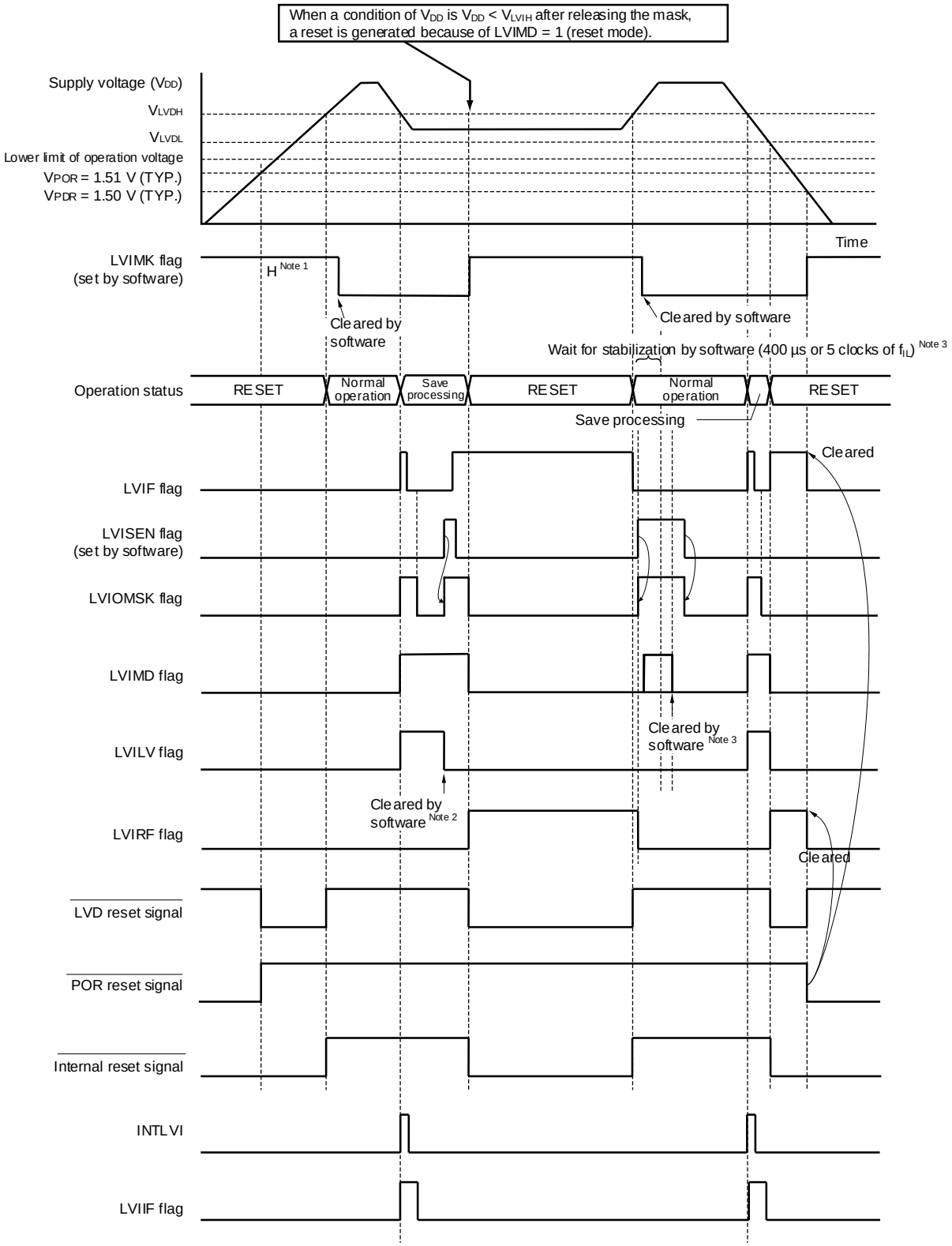

(**Notes** and **Remark** are listed on the next page.)

Notes 1. The LVIMK flag is set to “1” by reset signal generation.

2. After an interrupt is generated, perform the processing according to **Figure 24-8 Setting Procedure for Operating Voltage Check and Reset** in interrupt and reset mode.

3. After a reset is released, perform the processing according to **Figure 24-9 Initial Setting of Interrupt and Reset Mode**.

Remark V_{POR}: POR power supply rise detection voltage

V_{PDR}: POR power supply fall detection voltage

Figure 24-8. Setting Procedure for Operating Voltage Check and Reset

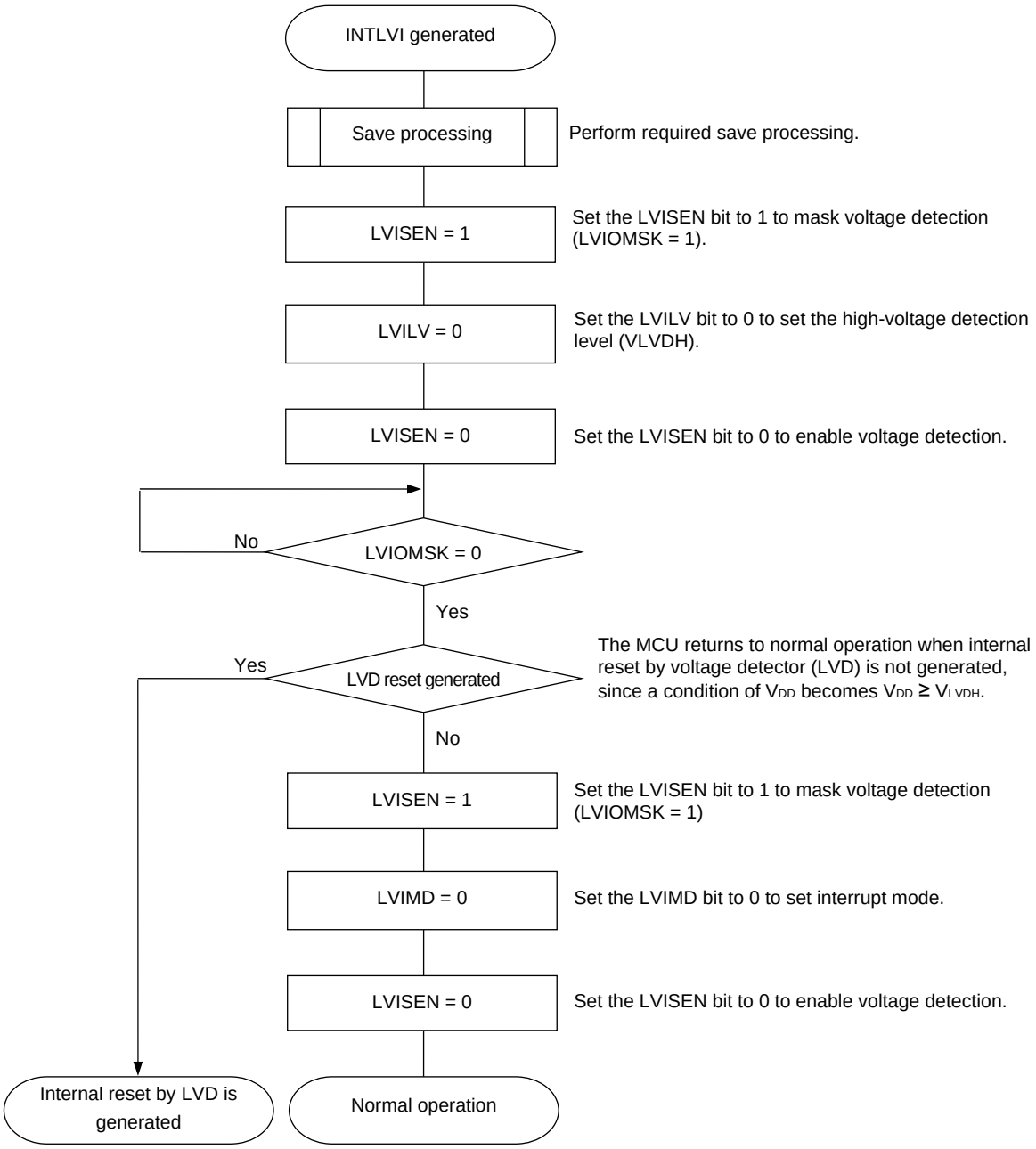

When setting an interrupt and reset mode (LVIMDS1, LVIMDS0 = 1, 0), voltage detection stabilization wait time for 400 μs or 5 clocks of fIL is necessary after LVD reset is released (LVIRF = 1). After waiting until voltage detection stabilizes, (0) clear the LVIMD bit for initialization. While voltage detection stabilization wait time is being counted and when the LVIMD bit is rewritten, set LVISEN to 1 to mask a reset or interrupt generation by LVD. Figure 24-9 shows the procedure for initial setting of interrupt and reset mode.

Figure 24-9. Initial Setting of Interrupt and Reset Mode

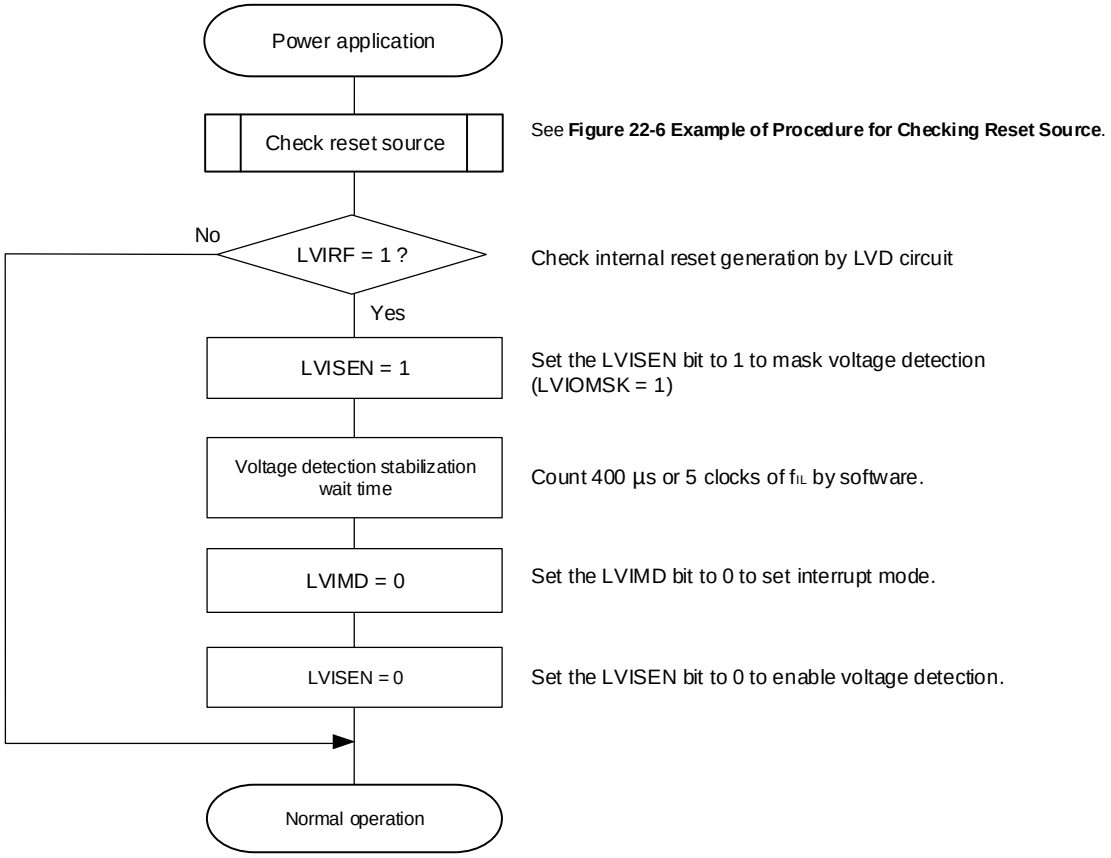

Remark f_{IL}: Low-speed on-chip oscillator clock frequency

24.5 Cautions for Voltage Detector

(1) Voltage fluctuation when power is supplied

In a system where the supply voltage (V_{DD}) fluctuates for a certain period in the vicinity of the LVD detection voltage, the system may be repeatedly reset and released from the reset status. In this case, the time from release of reset to the start of the operation of the microcontroller can be arbitrarily set by taking the following action.

<Action>

After releasing the reset signal, wait for the supply voltage fluctuation period of each system by means of a software counter that uses a timer, and then initialize the ports.

Figure 24-10. Example of Software Processing If Supply Voltage Fluctuation is 50 ms or Less in Vicinity of LVD Detection Voltage

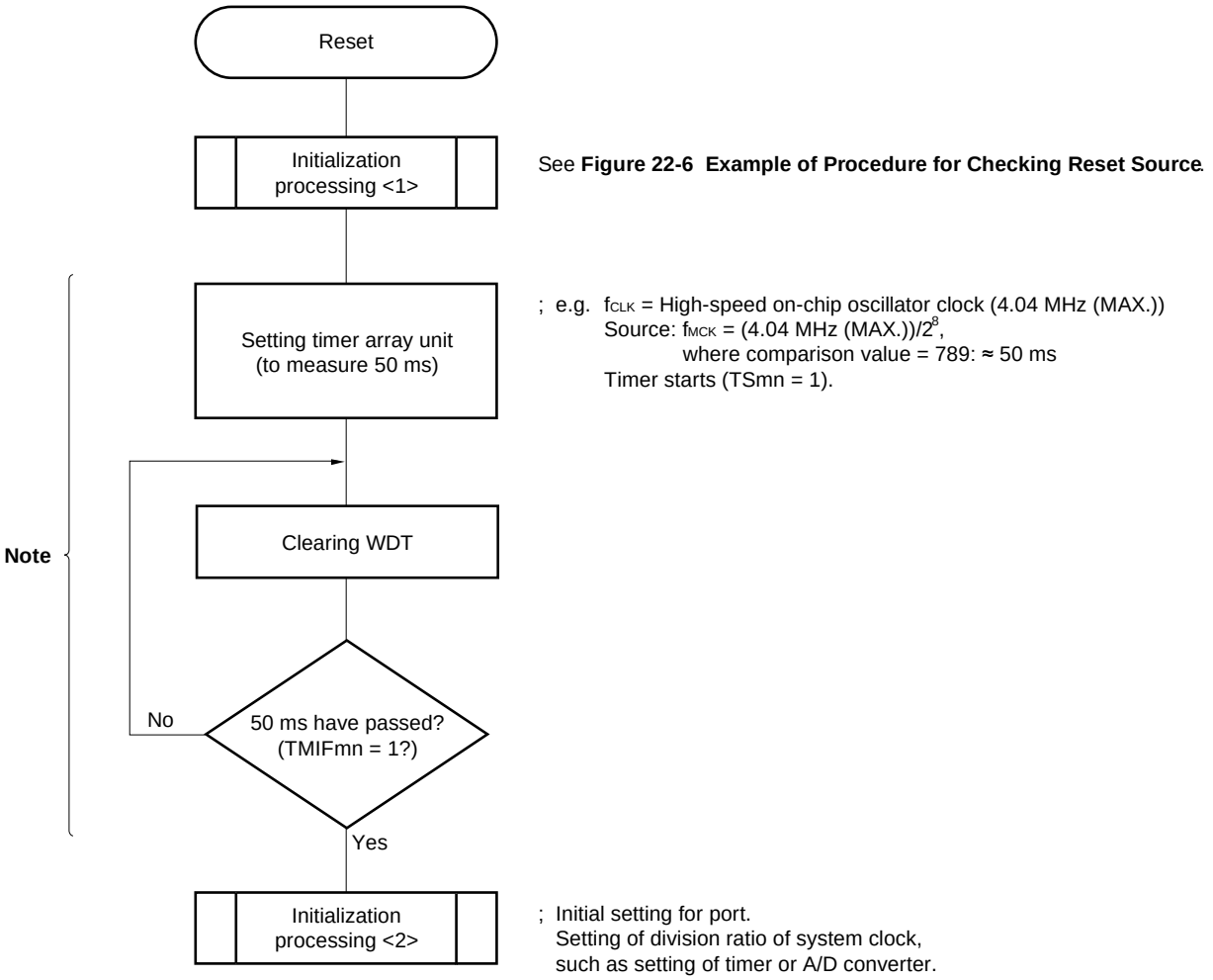

Note If reset is generated again during this period, initialization processing <2> is not started.

Remark m = 0
n = 0 to 7

(2) Delay from the time LVD reset source is generated until the time LVD reset has been generated or released

There is some delay from the time supply voltage (V_{DD}) < LVD detection voltage (V_{LVD}) until the time LVD reset has been generated.

In the same way, there is also some delay from the time LVD detection voltage (V_{LVD}) ≤ supply voltage (V_{DD}) until the time LVD reset has been released (see **Figure 24-11**).

Figure 24-11. Delay from the Time LVD Reset Source Is Generated Until the Time LVD Reset has Been Generated or Released

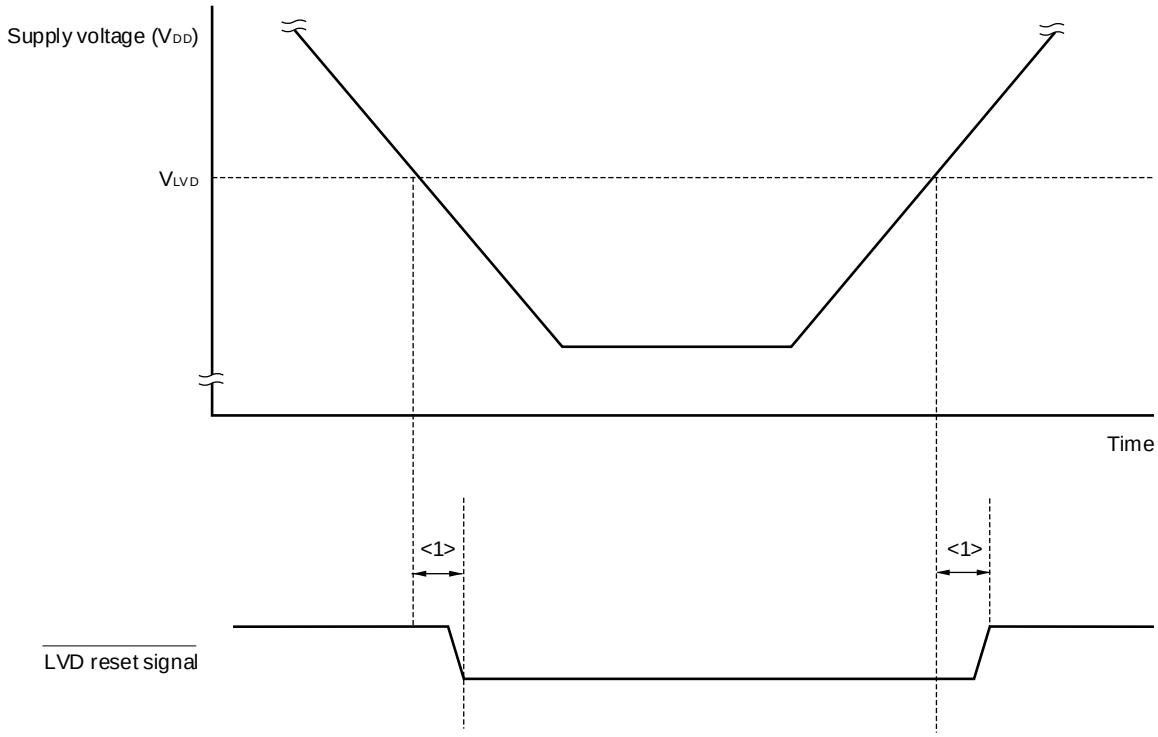

<1>: Detection delay (300 μs (MAX.))

(3) Power on when LVD is off

Use the external rest input via the $\overline{\text{RESET}}$ pin when the LVD is off.

For an external reset, input a low level for 10 μs or more to the $\overline{\text{RESET}}$ pin. To perform an external reset upon power application, input a low level to the $\overline{\text{RESET}}$ pin, turn power on, continue to input a low level to the pin for 10 μs or more within the operating voltage range shown in **32.4** or **33.4 AC Characteristics**, and then input a high level to the pin.

(4) Operating voltage fall when LVD is off or LVD interrupt mode is selected

When the operating voltage falls with the LVD is off or with the LVD interrupt mode is selected, this LSI should be placed in the STOP mode, or placed in the reset state by controlling the externally input reset signal, before the voltage falls below the operating voltage range defined in **32.4** or **33.4 AC characteristics**. When restarting the operation, make sure that the operation voltage has returned within the range of operation.

CHAPTER 25 SAFETY FUNCTIONS

25.1 Overview of Safety Functions

The following safety functions are provided in the RL78/L13 to comply with the IEC60730 and IEC61508 safety standards.

These functions enable the microcontroller to self-diagnose abnormalities and stop operating if an abnormality is detected.

(1) Flash memory CRC operation function (high-speed CRC, general-purpose CRC)

This detects data errors in the flash memory by performing CRC operations.

Two CRC functions are provided in the RL78/L13 that can be used according to the application or purpose of use.

- High-speed CRC: The CPU can be stopped and a high-speed check executed on its entire code flash memory area during the initialization routine.
- General CRC: This can be used for checking various data in addition to the code flash memory area while the CPU is running.

(2) RAM parity error detection function

This detects parity errors when the RAM is read as data.

(3) RAM guard function

This prevents RAM data from being rewritten when the CPU freezes.

(4) SFR guard function

This prevents SFRs from being rewritten when the CPU freezes.

(5) Invalid memory access detection function

This detects illegal accesses to invalid memory areas (such as areas where no memory is allocated and areas to which access is restricted).

(6) Frequency detection function

This function allows a self-check of the CPU/peripheral hardware clock frequencies using the timer array unit.

(7) A/D test function

This is used to perform a self-check of the A/D converter by performing A/D conversion of the A/D converter's positive and negative reference voltages, analog input channel (ANI), temperature sensor output voltage, and internal reference voltage.

(8) Digital output signal level detection function for I/O pins

When the I/O pins are output mode, the output level of the pin can be read.

Remark For usage examples of the safety functions complying with the IEC60730 safety standards, refer to the **RL78 MCU series IEC60730/60335 Application Notes (R01AN0749)**.

25.2 Registers Used by Safety Functions

The safety functions use the following registers for each function.

Register	Each Function of Safety Function
● Flash memory CRC control register (CRC0CTL) ● Flash memory CRC operation result register (PGCRCL)	Flash memory CRC operation function (high-speed CRC)
● CRC input register (CRCIN) ● CRC data register (CRCD)	CRC operation function (general-purpose CRC)
● RAM parity error control register (RPECTL)	RAM parity error detection function
● Invalid memory access detection control register (IAWCTL)	RAM guard function
	SFR guard function
	Invalid memory access detection function
● Timer input select register 0 (TIS0)	Frequency detection function
● A/D test register (ADTES)	A/D test function
● Port mode select register (PMS)	Digital output signal level detection function for I/O pins

The content of each register is described in **25.3 Operation of Safety Functions**.

25.3 Operation of Safety Functions

25.3.1 Flash memory CRC operation function (high-speed CRC)

The IEC60730 standard mandates the checking of data in the flash memory, and recommends using CRC to do it. The high-speed CRC provided in the RL78/L13 can be used to check the entire code flash memory area during the initialization routine. The high-speed CRC can be executed only when the program is allocated on the RAM and in the HALT mode of the main system clock.

The high-speed CRC performs an operation by reading 32-bit data per clock from the flash memory while stopping the CPU. This function therefore can finish a check in a shorter time (for example, 341 µs@24 MHz with 32-KB flash memory).

The CRC generator polynomial used complies with “$X^{16} + X^{12} + X^5 + 1$” of CRC-16-CCITT.

The high-speed CRC operates in MSB first order from bit 31 to bit 0.

Caution **The CRC operation result might differ during on-chip debugging because the monitor program is allocated.**

Remark The operation result is different between the high-speed CRC and the general CRC, because the general CRC operates in LSB first order.

25.3.1.1 Flash memory CRC control register (CRC0CTL)

This register is used to control the operation of the high-speed CRC ALU, as well as to specify the operation range.

The CRC0CTL register can be set by a 1-bit or 8-bit memory manipulation instruction.

Reset signal generation clears this register to 00H.

Figure 25-1. Format of Flash Memory CRC Control Register (CRC0CTL)

Address: F02F0H After reset: 00H R/W

Symbol	<7>	6	5	4	3	2	1	0
CRC0CTL	CRC0EN	0	0	0	0	FEA2[Note]	FEA1	FEA0

CRC0EN	Control of CRC ALU operation
0	Stop the operation.
1	Start the operation according to HALT instruction execution.

FEA2[Note]	FEA1	FEA0	High-speed CRC operation range
0	0	0	0000H to 3FFBH (16 K – 4 bytes)
0	0	1	0000H to 7FFBH (32 K – 4 bytes)
0	1	0	0000H to BFFBH (48 K – 4 bytes)
0	1	1	0000H to FFFBH (64 K – 4 bytes)
1	0	0	00000H to 13FFBH (80 K – 4 bytes)
1	0	1	00000H to 17FFBH (96 K – 4 bytes)
1	1	0	00000H to 1BFFBH (112 K – 4 bytes)
1	1	1	00000H to 1FFFBH (128 K – 4 bytes)

Note Be sure to clear bit 2 to “0” in products with a 64 KB flash memory.

Remark Input the expected CRC operation result value to be used for comparison in the lowest 4 bytes of the flash memory. Note that the operation range will thereby be reduced by 4 bytes.

25.3.1.2 Flash memory CRC operation result register (PGCRCL)

This register is used to store the high-speed CRC operation results.

The PGCRCL register can be set by a 16-bit memory manipulation instruction.

Reset signal generation clears this register to 0000H.

Figure 25-2. Format of Flash Memory CRC Operation Result Register (PGCRCL)

Address: F02F2H After reset: 0000H R/W

Symbol	15	14	13	12	11	10	9	8
PGCRCL	PGCRC15	PGCRC14	PGCRC13	PGCRC12	PGCRC11	PGCRC10	PGCRC9	PGCRC8
	7	6	5	4	3	2	1	0
	PGCRC7	PGCRC6	PGCRC5	PGCRC4	PGCRC3	PGCRC2	PGCRC1	PGCRC0

PGCRC15 to 0	High-speed CRC operation results
0000H to FFFFH	Store the high-speed CRC operation results.

Caution The PGCRCL register can only be written if CRC0EN (bit 7 of the CRC0CTL register) = 1.

Figure 25-3 shows the flowchart of flash memory CRC operation function (high-speed CRC).

<Operation flow>

Figure 25-3. Flowchart of Flash Memory CRC Operation Function (High-speed CRC)

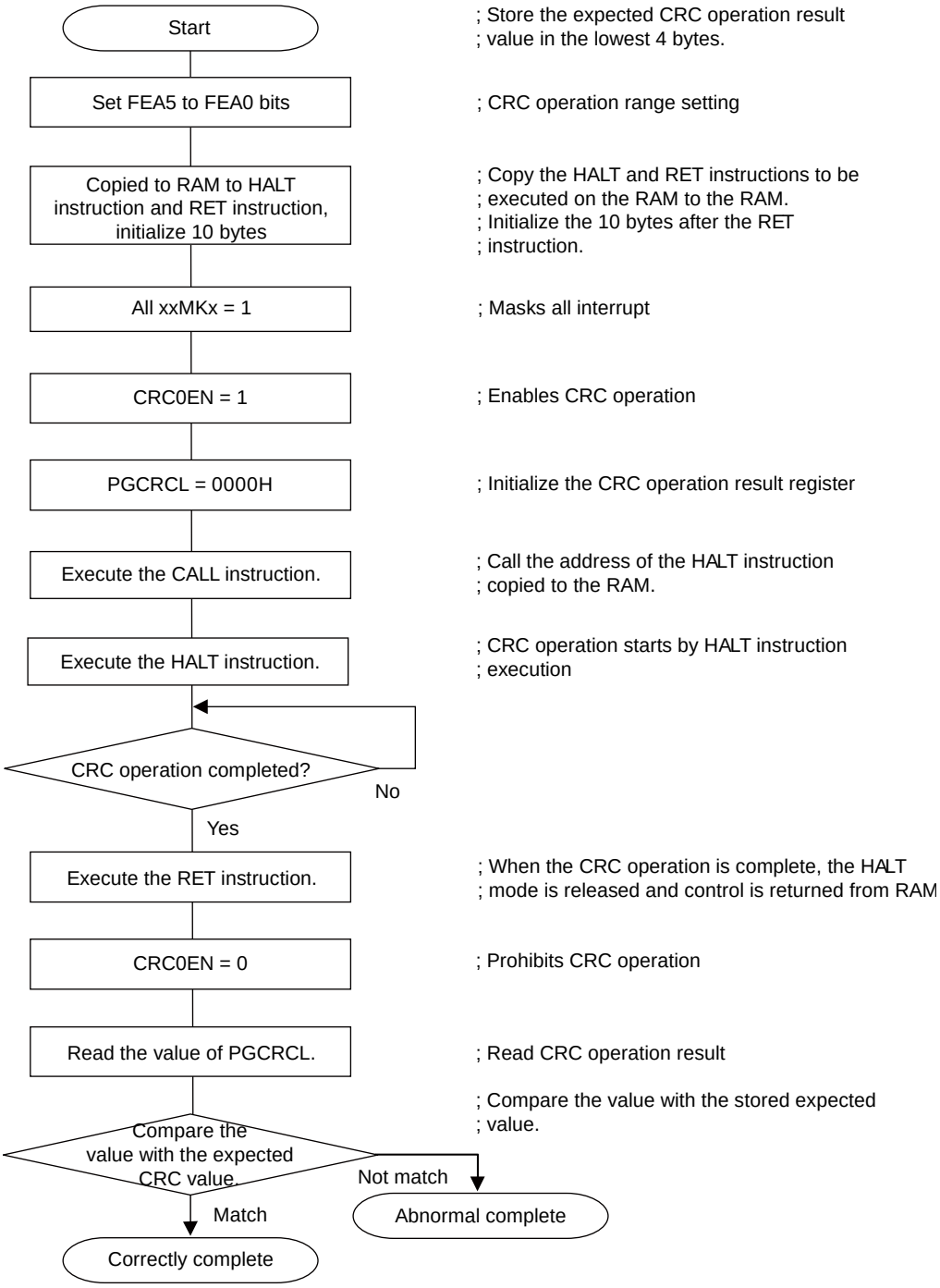

Cautions 1. The CRC operation is executed only on the code flash.

2. Store the expected CRC operation value in the area below the operation range in the code flash.

3. The CRC operation is enabled by executing the HALT instruction in the RAM area.
Be sure to execute the HALT instruction in RAM area.

The expected CRC value can be calculated by using the Integrated Development Environment CubeSuite+. See the **Integrated Development Environment CubeSuite+ User's Manual** for details.

25.3.2 CRC operation function (general-purpose CRC)

In order to guarantee safety during operation, the IEC61508 standard mandates the checking of data even while the CPU is operating.

In the RL78/L13, a general CRC operation can be executed as a peripheral function while the CPU is operating. The general CRC can be used for checking various data in addition to the code flash memory area. The data to be checked can be specified by using software (a user-created program). CRC calculation function in the HALT mode can be used only during the DMA transmission.

The general CRC operation can be executed in the main system clock operation mode as well as the subsystem clock operation mode.

The CRC generator polynomial used is "$X^{16} + X^{12} + X^5 + 1$" of CRC-16-CCITT. The data to be input is inverted in bit order and then calculated to allow for LSB-first communication. For example, if the data 12345678H is sent from the LSB, values are written to the CRCIN register in the order of 78H, 56H, 34H, and 12H, enabling a value of 08F6H to be obtained from the CRCD register. This is the result obtained by executing a CRC operation on the bit rows shown below, which consist of the data 12345678H inverted in bit order.

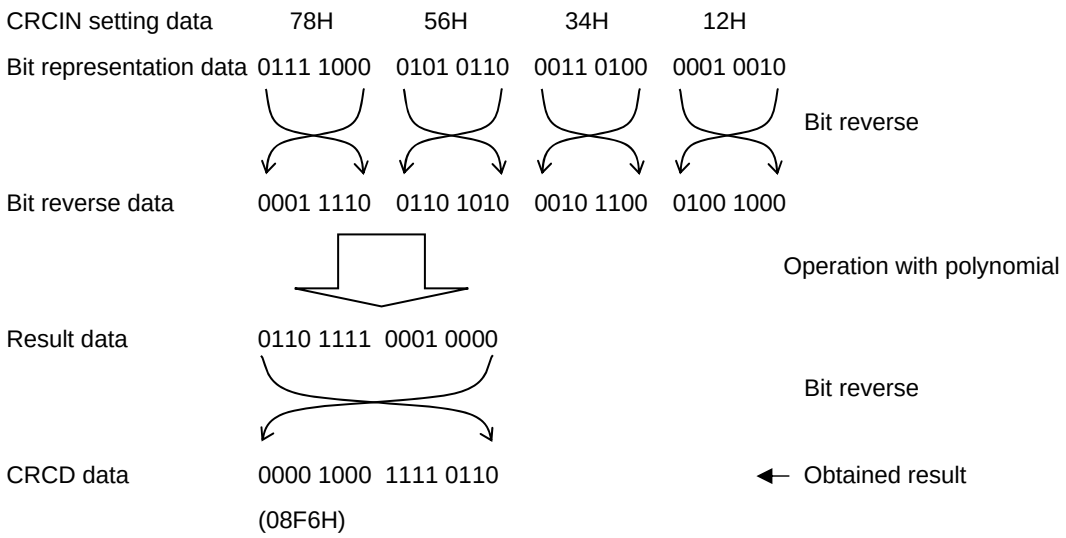

Caution Because the debugger rewrites the software break setting line to a break instruction during program execution, the CRC operation result differs if a software break is set in the CRC operation target area.

25.3.2.1 CRC input register (CRCIN)

CRCIN register is an 8-bit register that is used to set the CRC operation data of general-purpose CRC.

The possible setting range is 00H to FFH.

The CRCIN register can be set by an 8-bit memory manipulation instruction.

Reset signal generation clears this register to 00H.

Figure 25-4. Format of CRC Input Register (CRCIN)

Address: FFFACH After reset: 00H R/W

Symbol	7	6	5	4	3	2	1	0
CRCIN								

Bits 7 to 0	Function
00H to FFH	Data input.

25.3.2.2 CRC data register (CRCD)

This register is used to store the CRC operation result of the general-purpose CRC.

The setting range is 0000H to FFFFH.

When one cycle of the CPU/peripheral hardware clock (f_{CLK}) has elapsed after the time CRCIN register is written, the CRC operation result is stored to the CRCD register.

The CRCD register can be set by a 16-bit memory manipulation instruction.

Reset signal generation clears this register to 0000H.

Figure 25-5. Format of CRC Data Register (CRCD)

Address: F02FAH After reset: 0000H R/W

Symbol	15	14	13	12	11	10	9	8	7	6	5	4	3	2	1	0
CRCD																

Cautions 1. Read the value written to CRCD register before writing to CRCIN register.

2. If conflict between writing and storing operation result to CRCD register occurs, the writing is ignored.

<Operation flow>

Figure 25-6. CRC Operation Function (General-Purpose CRC)

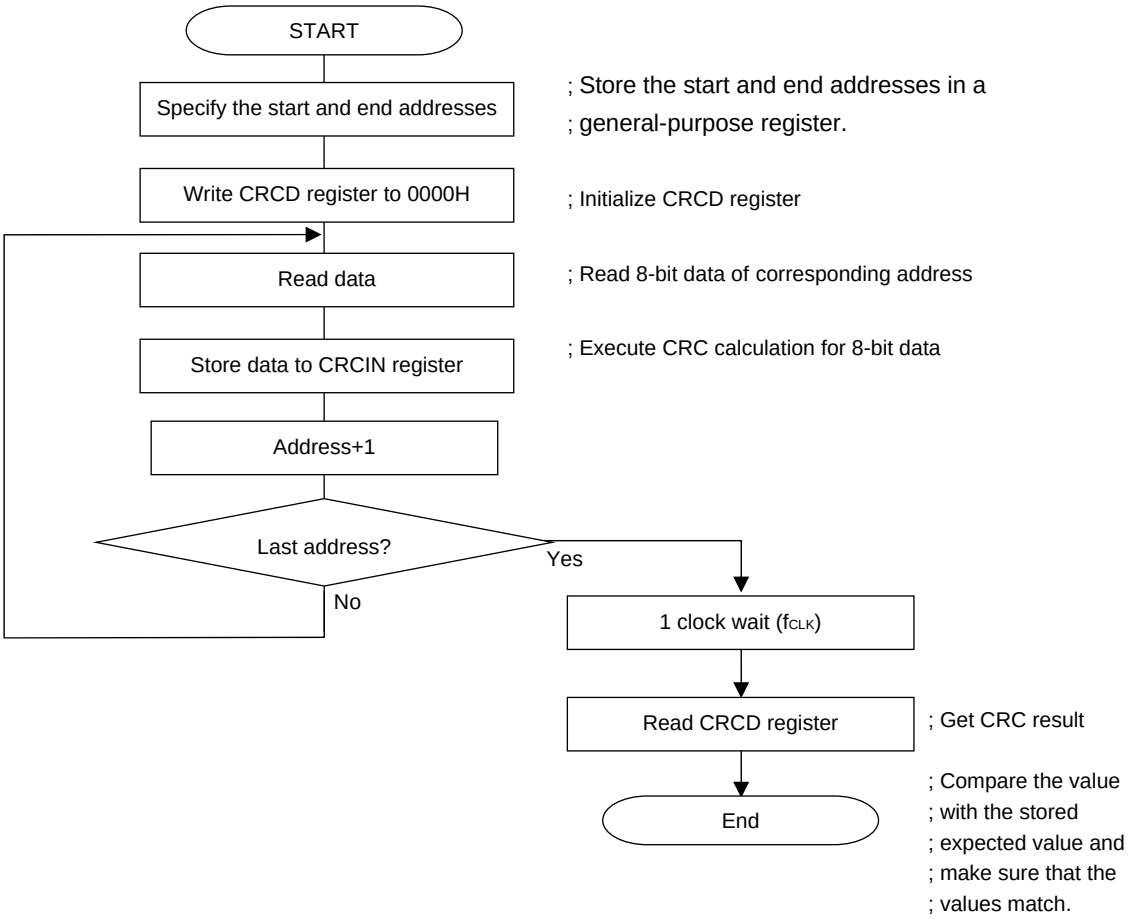

25.3.3 RAM parity error detection function

The IEC60730 standard mandates the checking of RAM data. A single-bit parity bit is therefore added to all 8-bit data in the RL78/L13's RAM. By using this RAM parity error detection function, the parity bit is appended when data is written, and the parity is checked when the data is read. This function can also be used to trigger a reset when a parity error occurs.

25.3.3.1 RAM parity error control register (RPECTL)

This register is used to control the parity error generation check bit and reset generation due to parity errors.

The RPECTL register can be set by a 1-bit or 8-bit memory manipulation instruction.

Reset signal generation clears this register to 00H.

Figure 25-7. Format of RAM Parity Error Control Register (RPECTL)

Address: F00F5H After reset: 00H R/W

Symbol	<7>	6	5	4	3	2	1	<0>
RPECTL	RPERDIS	0	0	0	0	0	0	RPEF

RPERDIS	Parity error reset mask flag
0	Enable parity error resets.
1	Disable parity error resets.

RPEF	Parity error status flag
0	No parity error has occurred.
1	A parity error has occurred.

Caution The parity bit is appended when data is written, and the parity is checked when the data is read. Therefore, while RAM parity error resets are enabled (RPERDIS = 0), be sure to initialize RAM areas where data access is to proceed before reading data.

The RL78's CPU executes look-ahead due to the pipeline operation, the CPU might read an uninitialized RAM area that is allocated beyond the RAM used, which causes a RAM parity error. Therefore, while RAM parity error resets are enabled (RPERDIS = 0), be sure to initialize the RAM area + 10 bytes when instructions are fetched from RAM areas. When using the self-programming function while RAM parity error resets are enabled (RPERDIS = 0), be sure to initialize the RAM area to overwrite + 10 bytes before overwriting.

Remarks 1. The parity error reset is enabled by default (RPERDIS = 0).

2. Even if the parity error reset is disabled (RPERDIS = 1), the RPEF flag will be set (1) if a parity error occurs. If parity error resets are enabled (RPERDIS = 0) with RPEF set to 1, a parity error reset is generated when the RPERDIS bit is cleared to 0.

3. The RPEF flag in the RPECTL register is set (1) when the RAM parity error occurs and cleared (0) by writing 0 to it or by any reset source. When RPEF = 1, the value is retained even if RAM for which no parity error has occurred is read.

4. The general registers are not included for RAM parity error detection.

Figure 25-8. Flowchart of RAM Parity Check

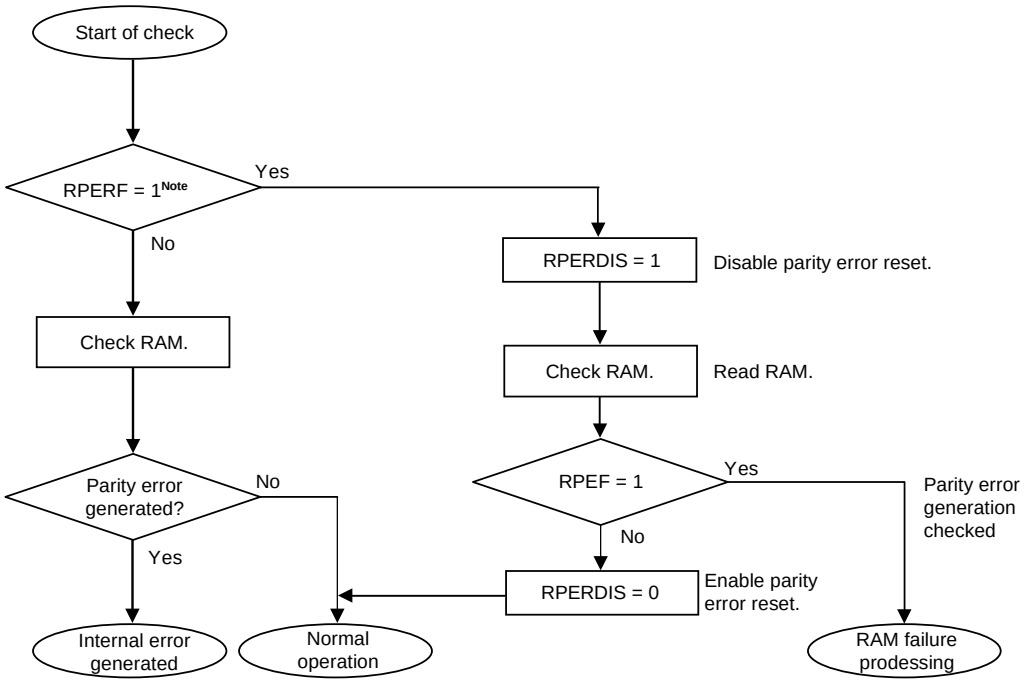

Note To check internal reset status using a RAM parity error, see **CHAPTER 22 RESET FUNCTION**.

25.3.4 RAM guard function

In order to guarantee safety during operation, the IEC61508 standard mandates that important data stored in the RAM be protected, even if the CPU freezes.

This RAM guard function is used to protect data in the specified memory space.

If the RAM guard function is specified, writing to the specified RAM space is disabled, but reading from the space can be carried out as usual.

25.3.4.1 Invalid memory access detection control register (IAWCTL)

This register is used to control detection of invalid memory access and the RAM/SFR guard function.

The GRAM1 and GRAM0 bits are used for the RAM guard function.

The IAWCTL register can be set by an 8-bit memory manipulation instruction.

Reset signal generation clears this register to 00H.

Figure 25-9. Format of Invalid Memory Access Detection Control Register (IAWCTL)

Address: F0078H After reset: 00H R/W

Symbol	7	6	5	4	3	2	1	0
IAWCTL	IAWEN	0	GRAM1	GRAM0	0	GPORT	GINT	GCSC

GRAM1	GRAM0	RAM guard space[Note]
0	0	Disabled. RAM can be written to.
0	1	The 128 bytes of space starting at the start address in the RAM
1	0	The 256 bytes of space starting at the start address in the RAM
1	1	The 512 bytes of space starting at the start address in the RAM

Note The RAM start address differs depending on the size of the RAM provided with the product.

25.3.5 SFR guard function

In order to guarantee safety during operation, the IEC61508 standard mandates that important SFRs be protected from being overwritten, even if the CPU freezes.

This SFR guard function is used to protect data in the control registers used by the port function, interrupt function, clock control function, voltage detection function, and RAM parity error detection function.

If the SFR guard function is specified, writing to the specified SFRs is disabled, but reading from the SFRs can be carried out as usual.

25.3.5.1 Invalid memory access detection control register (IAWCTL)

This register is used to control detection of invalid memory access and the RAM/SFR guard function.

The GPORT, GINT and GCSC bits are used for SFR guard function.

The IAWCTL register can be set by an 8-bit memory manipulation instruction.

Reset signal generation clears this register to 00H.

Figure 25-10. Format of Invalid Memory Access Detection Control Register (IAWCTL)

Address: F0078H After reset: 00H R/W

Symbol	7	6	5	4	3	2	1	0
IAWCTL	IAWEN	0	GRAM1	GRAM0	0	GPORT	GINT	GCSC

GPORT	Control registers of port function guard
0	Disabled. Control registers of port function can be read or written to.
1	Enabled. Writing to control registers of port function is disabled. Reading is enabled. [Guarded SFR] PMxx, PUxx, PIMxx, POMxx, PMCxx, ADPC, PIOR, PFSEGxx, ISCLCD[Note]

GINT	Registers of interrupt function guard
0	Disabled. Registers of interrupt function can be read or written to.
1	Enabled. Writing to registers of interrupt function is disabled. Reading is enabled. [Guarded SFR] IFxx, MKxx, PRxx, EGPx, EGNx

GCSC	Control registers of clock control function, voltage detector and RAM parity error detection function guard
0	Disabled. Control registers of clock control function, voltage detector and RAM parity error detection function can be read or written to.
1	Enabled. Writing to control registers of clock control function, voltage detector and RAM parity error detection function is disabled. Reading is enabled. [Guarded SFR] CMC, CSC, OSTS, CKC, PERx, OSMC, LVIM, LVIS, RPECTL

Note Pxx (port register) is not guarded.

25.3.6 Invalid memory access detection function

The IEC60730 standard mandates checking that the CPU and interrupts are operating correctly.

The illegal memory access detection function triggers a reset if a memory space specified as access-prohibited is accessed.

The illegal memory access detection function applies to the areas indicated by NG in Figure 25-11.

Figure 25-11. Invalid Access Detection Area

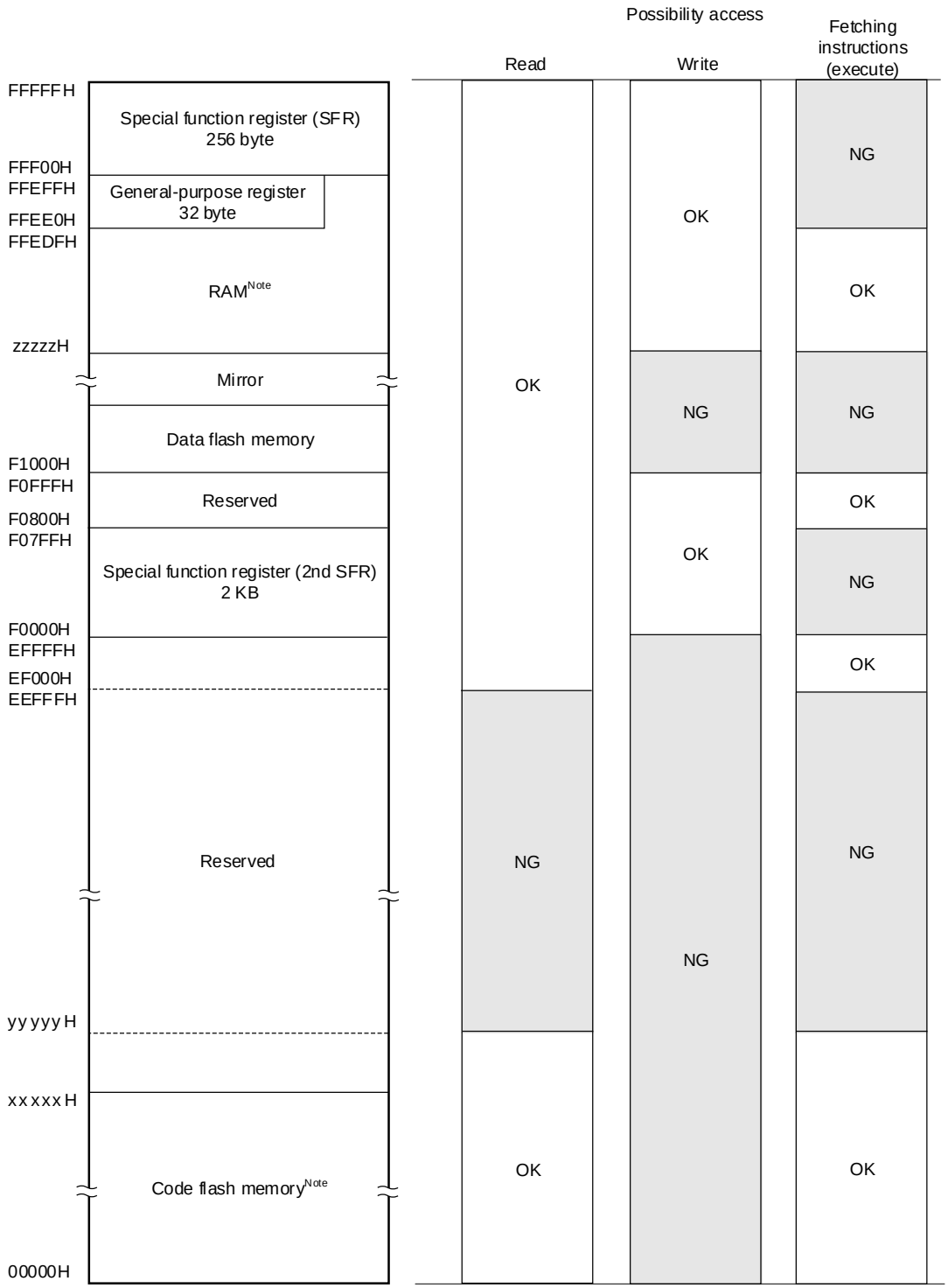

Note The following table lists the code flash memory, RAM, and lowest detection address for each product: (Description is listed on the next page.)

Products	Code flash memory (00000H to xxxxxH)	RAM (zzzzzH to FFEFFH)	Detected lowest address for read/instruction fetch (execution) (yyyyyH)
R5F10WLA, R5F10WMA	16384 × 8 bits (00000H to 03FFFH)	1024 × 8 bits (FFB00H to FFEFFH)	10000H
R5F10WLC, R5F10WMC	32768 × 8 bits (00000H to 07FFFH)	1536 × 8 bits (FF900H to FFEFFH)	10000H
R5F10WLD, R5F10WMD	49152 × 8 bits (00000H to 0BFFFH)	2048 × 8 bits (FF700H to FFEFFH)	10000H
R5F10WLE, R5F10WME	65536 × 8 bits (00000H to 0FFFFH)	4096 × 8 bits (FEF00H to FFEFFH)	10000H
R5F10WLF, R5F10WMF	98304 × 8 bits (00000H to 17FFFH)	6144 × 8 bits (FE700H to FFEFFH)	20000H
R5F10WLG, R5F10WMG	131072 × 8 bits (00000H to 1FFFFH)	8192 × 8 bits (FDF00H to FFEFFH)	20000H

25.3.6.1 Invalid memory access detection control register (IAWCTL)

This register is used to control detection of invalid memory access and the RAM/SFR guard function.

The IAWEN bit is used for the invalid memory access detection function.

The IAWCTL register can be set by an 8-bit memory manipulation instruction.

Reset signal generation clears this register to 00H.

Figure 25-12. Format of Invalid Memory Access Detection Control Register (IAWCTL)

Address: F0078H After reset: 00H R/W

Symbol	7	6	5	4	3	2	1	0
IAWCTL	IAWEN	0	GRAM1	GRAM0	0	GPORT	GINT	GCSC

IAWEN[Note]	Control of invalid memory access detection
0	Disable the detection of invalid memory access.
1	Enable the detection of invalid memory access.

Note Only writing 1 to the IAWEN bit is valid; not writing 0 to the IAWEN bit is ignored after it is set to 1.

Remark By specifying WDTON = 1 (watchdog timer operation enable) for the option byte (000C0H), the invalid memory access function is enabled even IAWEN = 0.

25.3.7 Frequency detection function

The IEC60730 standard mandates checking that the oscillation frequency is correct.

By using the CPU/peripheral hardware clock frequency (f_{CLK}) and measuring the pulse width of the input signal to channel 5 of the timer array unit 0 (TAU0), whether the proportional relationship between the two clock frequencies is correct can be determined. Note that, however, if one or both clock operations are completely stopped, the proportional relationship between the clocks cannot be determined.

<Clocks to be compared>

<1> CPU/peripheral hardware clock frequency (f_{CLK}):

- High-speed on-chip oscillator clock (f_{IH})
- High-speed system clock (f_{MX})

<2> Input to channel 1 of the timer array unit

- Timer input to channel 1 (TI01)
- Low-speed on-chip oscillator clock (f_{IL}: 15 kHz (typ.))
- Subsystem clock (f_{SUB})

Figure 25-13. Configuration of Frequency Detection Function

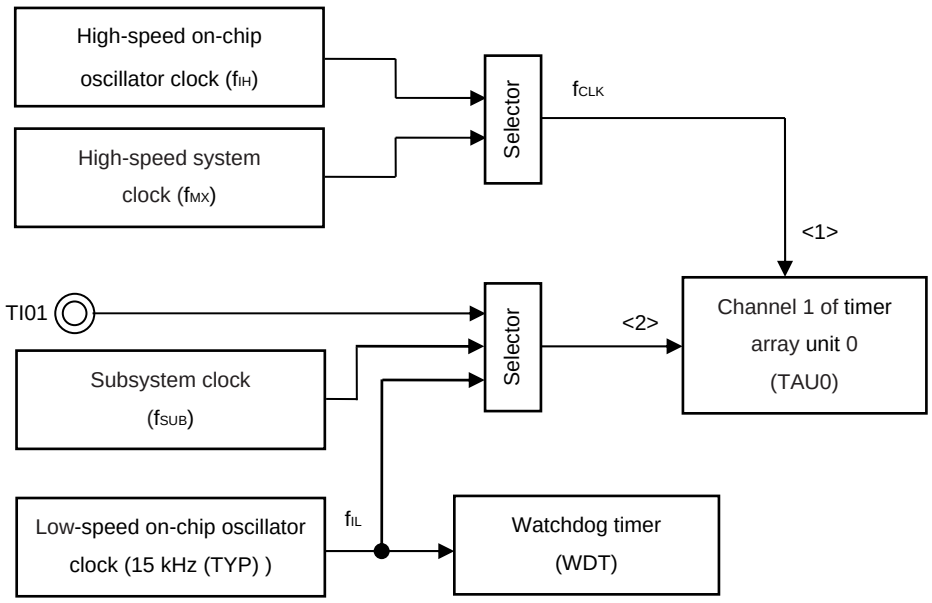

If input pulse interval measurement results in an abnormal value, it can be concluded that the clock frequency is abnormal.

For how to execute input pulse interval measurement, see **6.8.3 Operation as input pulse interval measurement**.

25.3.7.1 Timer input select register 0 (TIS0)

The TIS0 register is used to select the timer input of channel 1 of timer array unit 0 (TAU0).

The TIS0 register can be set by an 8-bit memory manipulation instruction.

Reset signal generation clears this register to 00H.

Figure 25-14. Format of Timer Input Select Register 0 (TIS0)

Address: F0074H After reset: 00H R/W

Symbol	7	6	5	4	3	2	1	0
TIS0	0	0	0	0	0	TIS02	TIS01	TIS00

TIS02	TIS01	TIS00	Selection of timer input used with channel 1
0	0	0	Input signal of timer input pin (TI01)
0	0	1	
0	1	0	
0	1	1	
1	0	0	Low-speed on-chip oscillator clock (f_{IL})
1	0	1	Subsystem clock (f_{SUB})
Other than above			Setting prohibited

25.3.8 A/D test function

The IEC60730 standard mandates testing the A/D converter. The A/D test function checks whether or not the A/D converter is operating normally by executing A/D conversions of the A/D converter's positive and negative reference voltages, analog input channel (ANI), temperature sensor output voltage, and the internal reference voltage. For details of the check method, see the **Safety Function (A/D Test) Application Note (R01AN0955)**.

The analog multiplexer can be checked using the following procedure.

<1> Select the ANIx pin for A/D conversion using the ADTES register (ADTES1 = 0, ADTES0 = 0).
<2> Perform A/D conversion for the ANIx pin (conversion result 1-1).
<3> Select the A/D converter's negative reference voltage for A/D conversion using the ADTES register (ADTES1 = 1, ADTES0 = 0)
<4> Perform A/D conversion of the negative reference voltage of the A/D converter (conversion result 2-1).
<5> Select the ANIx pin for A/D conversion using the ADTES register (ADTES1 = 0, ADTES0 = 0).
<6> Perform A/D conversion for the ANIx pin (conversion result 1-2).
<7> Select the A/D converter's positive reference voltage for A/D conversion using the ADTES register (ADTES1 = 1, ADTES0 = 1)
<8> Perform A/D conversion of the positive reference voltage of the A/D converter (conversion result 2-2).
<9> Select the ANIx pin for A/D conversion using the ADTES register (ADTES1 = 0, ADTES0 = 0).
<10> Perform A/D conversion for the ANIx pin (conversion result 1-3).
<11> Check that the conversion results 1-1, 1-2, and 1-3 are equal.
<12> Check that the A/D conversion result 2-1 is all zero and conversion result 2-2 is all one.

Using the procedure above can confirm that the analog multiplexer is selected and all wiring is connected.

Remarks 1. If the analog input voltage is variable during A/D conversion in steps <1> to <10> above, use another method to check the analog multiplexer.

2. The conversion results might contain an error. Consider an appropriate level of error when comparing the conversion results.

Figure 25-15. Configuration of A/D Test Function

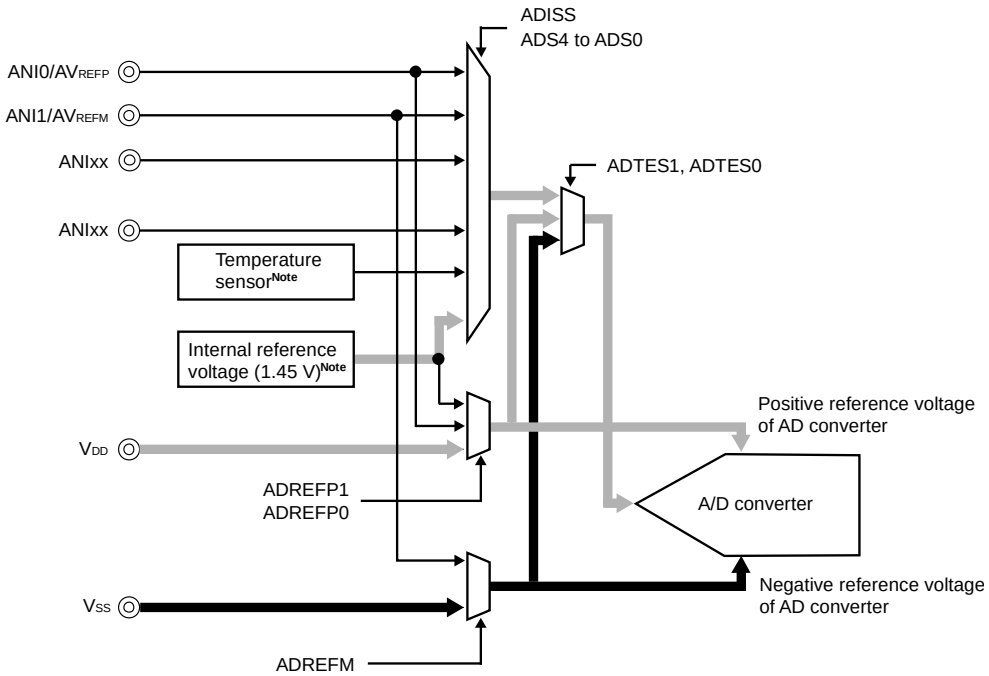

Note This setting can be used only in HS (high-speed main) mode.

25.3.8.1 A/D test register (ADTES)

This register is used to select the A/D converter's positive reference voltage, A/D converter's negative reference voltage, analog input channel (ANIxx), temperature sensor output voltage, or internal reference voltage (1.45 V) as the target of A/D conversion.

When using the A/D test function, specify the following settings:

- Select negative reference voltage as the target of A/D conversion for zero-scale measurement.
- Select positive reference voltage as the target of A/D conversion for full-scale measurement.

The ADTES register can be set by an 8-bit memory manipulation instruction.

Reset signal generation clears this register to 00H.

Figure 25-16. Format of A/D Test Register (ADTES)

Address: F0013H After reset: 00H R/W

Symbol	7	6	5	4	3	2	1	0
ADTES	0	0	0	0	0	0	ADTES1	ADTES0

ADTES1	ADTES0	A/D conversion target
0	0	ANIxx/temperature sensor output[Note]/internal reference voltage (1.45 V)[Note] (This is specified using the analog input channel specification register (ADS).)
1	0	Negative reference voltage (selected with the ADREFM bit in ADM2)
1	1	Positive reference voltage (selected with the ADREFP1 or ADREFP0 bit in ADM2)[Note]
Other than above		Setting prohibited

Note Temperature sensor output voltage and internal reference voltage (1.45 V) can be used only in HS (high-speed main) mode.

25.3.8.2 Analog input channel specification register (ADS)

This register specifies the input channel of the analog voltage to be A/D converted.

Set the A/D test register (ADTES) to 00H when measuring the ANIxx/temperature sensor output /internal reference voltage (1.45 V).

The ADS register can be set by a 1-bit or 8-bit memory manipulation instruction.

Reset signal generation clears this register to 00H.

Figure 25-17. Format of Analog Input Channel Specification Register (ADS)

Address: FFF31H After reset: 00H R/W

Symbol	7	6	5	4	3	2	1	0
ADS	ADISS	0	0	ADS4	ADS3	ADS2	ADS1	ADS0

ADISS	ADS4	ADS3	ADS2	ADS1	ADS0	Analog input channel	Input source
0	0	0	0	0	0	ANI0	P21/ANI0/AV_{REFP} pin
0	0	0	0	0	1	ANI1	P20/ANI1/AV_{REFM} pin
0	1	0	0	0	0	ANI16	P22/ANI16 pin
0	1	0	0	0	1	ANI17	P23/ANI17 pin
0	1	0	0	1	0	ANI18	P24/ANI18 pin
0	1	0	0	1	1	ANI19	P25/ANI19 pin
0	1	0	1	0	0	ANI20	P26/ANI20 pin
0	1	0	1	0	1	ANI21	P27/ANI21 pin
0	1	0	1	1	0	ANI22	P10/ANI22 pin
0	1	0	1	1	1	ANI23	P11/ANI23 pin
0	1	1	0	0	0	ANI24	P12/ANI24 pin
0	1	1	0	0	1	ANI25	P13/ANI25 pin
1	0	0	0	0	0	–	Temperature sensor output voltage[Note]
1	0	0	0	0	1	–	Internal reference voltage (1.45 V)[Note]
Other than above						Setting prohibited	

Note This setting can be used only in HS (high-speed main) mode.

Cautions
1. **Be sure to clear bits 5 and 6 to 0.**
2. **Select input mode for the ports which are set to analog input with the ADPC and PMC registers, using the port mode registers 1 and 2 (PM1 and PM2).**
3. **Do not use the ADS register to set the pins which should be set as digital I/O with the A/D port configuration register (ADPC).**
4. **Do not use the ADS register to set the pins which should be set as digital I/O with the port mode control registers 1, 2 (PMC1, PMC2).**
5. **Only rewrite the value of the ADISS bit while conversion operation is stopped (ADCS = 0, ADCE = 0).**
6. **If using AV_{REFP} as the positive reference voltage source of the A/D converter, do not select ANI0 as an A/D conversion channel.**
7. **If using AV_{REFM} as the negative reference voltage source of the A/D converter, do not select ANI1 as an A/D conversion channel.**
8. **When ADISS is 1, the internal reference voltage (1.45 V) cannot be used for the positive reference voltage. In addition, the first conversion result obtained after setting ADISS to 1 is not available. For detailed setting flow, see 12.7.4 Setup when using temperature sensor (example for software trigger mode and one-shot conversion mode).**
9. **If a transition is made to STOP mode or a transition is made to HALT mode during CPU operation with subsystem clock, do not set ADISS to 1. When ADISS is 1, the A/D converter reference voltage current (I_{ADREF}) shown in 32.3.2 or 33.3.2 Supply current characteristics is added.**

25.3.9 Digital output signal level detection function for I/O pins

In the IEC60730, it is required to check that the I/O function correctly operates.

By using the digital output signal level detection function for I/O pins, the digital output level of the pin can be read when the pin is set to output mode.

25.3.9.1 Port mode select register (PMS)

This register is used to select the output level from output latch level or pin output level when the pin is output mode in which the PMm bit of the port mode register (PMm) is 0.

This register can be set by a 1-bit or 8-bit memory manipulation instruction.

Reset signal generation clears this register to 00H.

Figure 25-18. Format of Port Mode Select Register (PMS)

Address: F007BH After reset: 00H R/W

Symbol	7	6	5	4	3	2	1	0
PMS	0	0	0	0	0	0	0	PMS0

PMS0	Method for selecting output level to be read when port is output mode (PMmn = 0)
0	Pmn register value is read.
1	Digital output level of the pin is read.

Remark m = 0 to 7, 12
n = 0 to 7

Cautions
1. **While the PMS0 bit of the PMS register is 1, do not change the value of the Px register by using a read-modify instruction. To change the value of the Px register, use an 8-bit memory manipulation instruction.**
2. **PMS control cannot be used for the dedicated LCD pins and the input-only pins (P121 to P124 and P137).**
3. **PMS control cannot be used for alternate-function pins being used as segment output pins. (“L” is always read when this register is read.)**
4. **PMS control cannot be used for the P74 (TKBO00), P75 (TKBO01-2), P76 (TKBO01-1), and P77 (TKBO01-0) pins when they are being used as TMKB2 output pins and the forced output stop function is enabled (Hi-Z output only). (“L” is always read when this register is read.)**
5. **PMS control cannot be used for P61 and P60 when IICA0EN (bit 4 of the PER0 register) is 0.**

CHAPTER 26 REGULATOR

26.1 Regulator Overview

The RL78/L13 contains a circuit for operating the device with a constant voltage. At this time, in order to stabilize the regulator output voltage, connect the REGC pin to V_{SS} via a capacitor (0.47 to 1 µF). Also, use a capacitor with good characteristics, since it is used to stabilize internal voltage.

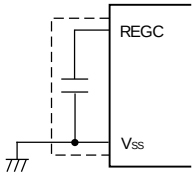

Caution Keep the wiring length as short as possible for the broken-line part in the above figure.

The regulator output voltage, see **Table 26-1**.

Table 26-1. Regulator Output Voltage Conditions

Mode	Output Voltage	Condition
LV (low voltage main) mode	1.8 V	–
LS (low-speed main) mode		
HS (high-speed main) mode	1.8 V	In STOP mode
		When both the high-speed system clock (f_{MX}) and the high-speed on-chip oscillator clock (f_{IH}) are stopped during CPU operation with the subsystem clock (f_{SUB})
		When both the high-speed system clock (f_{MX}) and the high-speed on-chip oscillator clock (f_{IH}) are stopped during the HALT mode when the CPU operation with the subsystem clock (f_{SUB}) has been set
	2.1 V	Other than above (include during OCD mode)[Note]

Note When it shifts to the subsystem clock operation or STOP mode during the on-chip debugging, the regulator output voltage is kept at 2.1 V (not decline to 1.8 V).

CHAPTER 27 OPTION BYTE

27.1 Functions of Option Bytes

Addresses 000C0H to 000C3H of the flash memory of the RL78/L13 form an option byte area.

Option bytes consist of user option byte (000C0H to 000C2H) and on-chip debug option byte (000C3H).

Upon power application or resetting and starting, an option byte is automatically referenced and a specified function is set. When using the product, be sure to set the following functions by using the option bytes.

For the bits to which no function is allocated, do not change their initial values.

To use the boot swap operation during self programming, 000C0H to 000C3H are replaced by 010C0H to 010C3H. Therefore, set the same values as 000C0H to 000C3H to 010C0H to 010C3H.

Caution The option bytes should always be set regardless of whether each function is used.

27.1.1 User option byte (000C0H to 000C2H/010C0H to 010C2H)

(1) 000C0H/010C0H

- ○ Operation of watchdog timer
  - ● Enabling or disabling of counter operation
  - ● Operation is stopped or enabled in the HALT or STOP mode.
- ○ Setting of interval time of watchdog timer
- ○ Setting of window open period of watchdog timer
- ○ Setting of interval interrupt of watchdog timer
  - ● Whether or not to use the interval interrupt is selectable.

Caution Set the same value as 000C0H to 010C0H when the boot swap operation is used because 000C0H is replaced by 010C0H.

(2) 000C1H/010C1H

- ○ Setting of LVD operation mode
  - ● Interrupt & reset mode.
  - ● Reset mode.
  - ● Interrupt mode.
  - ● LVD off (by controlling the externally input reset signal on the $\overline{\text{RESET}}$ pin)
- ○ Setting of LVD detection level (V_{LVDH}, V_{LVDL}, V_{LVD})

Cautions 1. After power is supplied, the reset state must be retained until the operating voltage becomes in the range defined in 32.4 or 33.4 AC Characteristics. This is done by utilizing the voltage detection circuit or controlling the externally input reset signal. After the power supply is turned off, this LSI should be placed in the STOP mode, or placed in the reset state by utilizing the voltage detection circuit or controlling the externally input reset signal, before the voltage falls below the operating range. The range of operating voltage varies with the setting of the user option byte (000C2H or 010C2H).

2. Set the same value as 000C1H to 010C1H when the boot swap operation is used because 000C1H is replaced by 010C1H.

(3) 000C2H/010C2H

○ Setting of flash operation mode

Make the setting depending on the main system clock frequency (f_{MAIN}) and power supply voltage (V_{DD}) to be used.

- LV (low voltage main) mode
- LS (low speed main) mode
- HS (high speed main) mode

○ Setting of the frequency of the high-speed on-chip oscillator

- Select from 48 MHz/24 MHz/16 MHz/12 MHz/8 MHz/6 MHz/4 MHz /3 MHz/2 MHz/1 MHz (TYP.).

Caution Set the same value as 000C2H to 010C2H when the boot swap operation is used because 000C2H is replaced by 010C2H.

27.1.2 On-chip debug option byte (000C3H/ 010C3H)

○ Control of on-chip debug operation

- On-chip debug operation is disabled or enabled.

○ Handling of data of flash memory in case of failure in on-chip debug security ID authentication

- Data of flash memory is erased or not erased in case of failure in on-chip debug security ID authentication.

Caution Set the same value as 000C3H to 010C3H when the boot swap operation is used because 000C3H is replaced by 010C3H.

27.2 Format of User Option Byte

The format of user option byte is shown below.

Figure 27-1. Format of User Option Byte (000C0H/010C0H)

Address: 000C0H/010C0H[Note 1]

7	6	5	4	3	2	1	0
WDTINT	WINDOW1	WINDOW0	WDTON	WDCS2	WDCS1	WDCS0	WDSTBYON

WDTINT	Use of interval interrupt of watchdog timer
0	Interval interrupt is not used.
1	Interval interrupt is generated when 75% of the overflow time + 1/2 f_{IL} is reached.

WINDOW1	WINDOW0	Watchdog timer window open period[Note 2]
0	0	Setting prohibited
0	1	50%
1	0	75% [Note 3]
1	1	100%

WDTON	Operation control of watchdog timer counter
0	Counter operation disabled (counting stopped after reset)
1	Counter operation enabled (counting started after reset)

WDCS2	WDCS1	WDCS0	Watchdog timer overflow time (f_{IL} = 17.25 kHz (MAX.))
0	0	0	$2^6/f_{IL}$ (3.71 ms)
0	0	1	$2^7/f_{IL}$ (7.42 ms)
0	1	0	$2^8/f_{IL}$ (14.84 ms)
0	1	1	$2^9/f_{IL}$ (29.68 ms)
1	0	0	$2^{11}/f_{IL}$ (118.72 ms)
1	0	1	$2^{13}/f_{IL}$ (474.89 ms)
1	1	0	$2^{14}/f_{IL}$ (949.79 ms)
1	1	1	$2^{16}/f_{IL}$ (3799.18 ms)

WDSTBYON	Operation control of watchdog timer counter (HALT/STOP mode)
0	Counter operation stopped in HALT/STOP mode[Note 2]
1	Counter operation enabled in HALT/STOP mode

Notes 1. Set the same value as 000C0H to 010C0H when the boot swap operation is used because 000C0H is replaced by 010C0H.

2. The window open period is 100% when WDSTBYON = 0, regardless the value of the WINDOW1 and WINDOW0 bits.

Notes 3. When the window open period is set to 75%, clearing the counter of the watchdog timer (writing ACH to WDTE) must proceed outside the corresponding period from among those listed below, over which clearing of the counter is prohibited (for example, confirming that the interval timer interrupt request flag (WDTIIF) of the watchdog timer is set).

WDCS2	WDCS1	WDCS0	Watchdog timer overflow time (f_{IL} = 17.25 kHz (MAX.))	Period over which clearing the counter is prohibited when the window open period is set to 75%
0	0	0	$2^6/f_{IL}$ (3.71 ms)	1.85 ms to 2.51 ms
0	0	1	$2^7/f_{IL}$ (7.42 ms)	3.71 ms to 5.02 ms
0	1	0	$2^8/f_{IL}$ (14.84 ms)	7.42 ms to 10.04 ms
0	1	1	$2^9/f_{IL}$ (29.68 ms)	14.84 ms to 20.08 ms
1	0	0	$2^{11}/f_{IL}$ (118.72 ms)	56.36 ms to 80.32 ms
1	0	1	$2^{13}/f_{IL}$ (474.89 ms)	237.44 ms to 321.26 ms
1	1	0	$2^{14}/f_{IL}$ (949.79 ms)	474.89 ms to 642.51 ms
1	1	1	$2^{16}/f_{IL}$ (3799.18 ms)	1899.59 ms to 2570.04 ms

Remark f_{IL}: Low-speed on-chip oscillator clock frequency

Figure 27-2. Format of User Option Byte (000C1H/010C1H) (1/2)

Address: 000C1H/010C1H[Note]

7	6	5	4	3	2	1	0
VPOC2	VPOC1	VPOC0	1	LVIS1	LVIS0	LVIMDS1	LVIMDS0

- LVD setting (interrupt & reset mode)

Detection voltage			Option byte setting value						
V_{LVDH}		V_{LVDL}	Mode setting		VPOC2	VPOC1	VPOC0	LVIS1	LVIS0
Rising edge	Falling edge	Falling edge	LVIMDS1	LVIMDS0					
1.77 V	1.73 V	1.63 V	1	0	0	0	0	1	0
1.88 V	1.84 V							0	1
2.92 V	2.86 V							0	0
1.98 V	1.94 V	1.84 V			0	0	1	1	0
2.09 V	2.04 V							0	1
3.13 V	3.06 V							0	0
2.61 V	2.55 V	2.45 V			0	1	0	1	0
2.71 V	2.65 V							0	1
3.75 V	3.67 V							0	0
2.92 V	2.86 V	2.75 V			0	1	1	1	0
3.02 V	2.96 V							0	1
4.06 V	3.98 V							0	0
Other than above			Setting prohibited						

- LVD setting (reset mode)

Detection voltage		Option byte setting value						
V_{LVD}		Mode setting		VPOC2	VPOC1	VPOC0	LVIS1	LVIS0
Rising edge	Falling edge	LVIMDS1	LVIMDS0					
1.67 V	1.63 V	1	1	0	0	0	1	1
1.77 V	1.73 V			0	0	0	1	0
1.88 V	1.84 V			0	0	1	1	1
1.98 V	1.94 V			0	0	1	1	0
2.09 V	2.04 V			0	0	1	0	1
2.50 V	2.45 V			0	1	0	1	1
2.61 V	2.55 V			0	1	0	1	0
2.71 V	2.65 V			0	1	0	0	1
2.81 V	2.75 V			0	1	1	1	1
2.92 V	2.86 V			0	1	1	1	0
3.02 V	2.96 V			0	1	1	0	1
3.13 V	3.06 V			0	0	1	0	0
3.75 V	3.67 V			0	1	0	0	0
4.06 V	3.98 V			0	1	1	0	0
Other than above		Setting prohibited						

Note Set the same value as 000C1H to 010C1H when the boot swap operation is used because 000C1H is replaced by 010C1H.

Remarks 1. For details on the LVD circuit, see **CHAPTER 24 VOLTAGE DETECTOR.**

2. The detection voltage is a typical value. For details, see **32.6.5** or **33.6.5 LVD circuit characteristics.**

(**Cautions** are listed on the next page.)

Figure 27-2. Format of User Option Byte (000C1H/010C1H) (2/2)

Address: 000C1H/010C1H[Note]

7	6	5	4	3	2	1	0
VPOC2	VPOC1	VPOC0	1	LVIS1	LVIS0	LVIMDS1	LVIMDS0

- LVD setting (interrupt mode)

Detection voltage		Option byte setting value						
V_{LVD}		Mode setting		VPOC2	VPOC1	VPOC0	LVIS1	LVIS0
Rising edge	Falling edge	LVIMDS1	LVIMDS0					
1.67 V	1.63 V	0	1	0	0	0	1	1
1.77 V	1.73 V			0	0	0	1	0
1.88 V	1.84 V			0	0	1	1	1
1.98 V	1.94 V			0	0	1	1	0
2.09 V	2.04 V			0	0	1	0	1
2.50 V	2.45 V			0	1	0	1	1
2.61 V	2.55 V			0	1	0	1	0
2.71 V	2.65 V			0	1	0	0	1
2.81 V	2.75 V			0	1	1	1	1
2.92 V	2.86 V			0	1	1	1	0
3.02 V	2.96 V			0	1	1	0	1
3.13 V	3.06 V			0	0	1	0	0
3.75 V	3.67 V			0	1	0	0	0
4.06 V	3.98 V			0	1	1	0	0
Other than above		Setting prohibited						

- LVD setting (LVDOFF)

Detection voltage		Option byte setting value						
V_{LVD}		Mode setting		VPOC2	VPOC1	VPOC0	LVIS1	LVIS0
Rising edge	Falling edge	LVIMDS1	LVIMDS0					
–	–	×	1	1	×	×	×	×
Other than above		Setting prohibited						

Note Set the same value as 000C1H to 010C1H when the boot swap operation is used because 000C1H is replaced by 010C1H.

Cautions 1. Be sure to set bit 4 to "1".

2. After power is supplied, the reset state must be retained until the operating voltage becomes in the range defined in 32.4 or 33.4 AC Characteristics. This is done by utilizing the voltage detection circuit or controlling the externally input reset signal. After the power supply is turned off, this LSI should be placed in the STOP mode, or placed in the reset state by utilizing the voltage detection circuit or controlling the externally input reset signal, before the voltage falls below the operating range. The range of operating voltage varies with the setting of the user option byte (000C2H or 010C2H).

Remarks 1. ×: don't care

2. For details on the LVD circuit, see **CHAPTER 24 VOLTAGE DETECTOR**.

3. The detection voltage is a typical value. For details, see **32.6.5** or **33.6.5 LVD circuit characteristics**.

Figure 27-3. Format of Option Byte (000C2H/010C2H)

Address: 000C2H/010C2H[Note]

7	6	5	4	3	2	1	0
CMODE1	CMODE0	1	FRQSEL4	FRQSEL3	FRQSEL2	FRQSEL1	FRQSEL0

CMODE1	CMODE0	Setting of flash operation mode		
			Operating frequency range (f_{MAIN})	Operating voltage range (V_{DD})
0	0	LV (low voltage main) mode	1 to 4 MHz	1.6 to 5.5 V
1	0	LS (low speed main) mode	1 to 8 MHz	1.8 to 5.5 V
1	1	HS (high speed main) mode	1 to 16 MHz	2.4 to 5.5 V
			1 to 24 MHz	2.7 to 5.5 V
Other than above		Setting prohibited		

FRQSEL4	FRQSEL3	FRQSEL2	FRQSEL1	FRQSEL0	Frequency of the high-speed on-chip oscillator clock	
					f_{HOCO}	f_{IH}
1	0	0	0	0	48 MHz	24 MHz
0	0	0	0	0	24 MHz	24 MHz
0	1	0	0	1	16 MHz	16 MHz
0	0	0	0	1	12 MHz	12 MHz
0	1	0	1	0	8 MHz	8 MHz
0	0	0	1	0	6 MHz	6 MHz
0	1	0	1	1	4 MHz	4 MHz
0	0	0	1	1	3 MHz	3 MHz
0	1	1	0	0	2 MHz	2 MHz
0	1	1	0	1	1 MHz	1 MHz
Other than above					Setting prohibited	

Note Set the same value as 000C2H to 010C2H when the boot swap operation is used because 000C2H is replaced by 010C2H.

Cautions 1. Be sure to set bit 5 to "1"

2. The ranges of operation frequency and operation voltage vary depending on the flash operation mode. For details, see 32.4 or 33.4 AC Characteristics.

27.3 Format of On-chip Debug Option Byte

The format of on-chip debug option byte is shown below.

Figure 27-4. Format of On-chip Debug Option Byte (000C3H/010C3H)

Address: 000C3H/010C3H[Note]

7	6	5	4	3	2	1	0
OCDENSET	0	0	0	0	1	0	OCDERSD

OCDENSET	OCDERSD	Control of on-chip debug operation
0	0	Disables on-chip debug operation.
0	1	Setting prohibited
1	0	Enables on-chip debugging. Erases data of flash memory in case of failures in authenticating on-chip debug security ID.
1	1	Enables on-chip debugging. Does not erases data of flash memory in case of failures in authenticating on-chip debug security ID.

Note Set the same value as 000C3H to 010C3H when the boot swap operation is used because 000C3H is replaced by 010C3H.

Caution Bits 7 and 0 (OCDENSET and OCDERSD) can only be specified a value.
Be sure to set bits 6 to 1 to 000010B.

Remark The value on bits 3 to 1 will be written over when the on-chip debug function is in use and thus it will become unstable after the setting.
However, be sure to set bits 3 to 1 to their default value (0, 1, and 0).

27.4 Setting of Option Byte

The user option byte and on-chip debug option byte can be set using the link option, in addition to describing to the source. When doing so, the contents set by using the link option take precedence, even if descriptions exist in the source, as mentioned below.

A software description example of the option byte setting is shown below.

```
OPT   CSEG      OPT_BYTE
      DB        36H     ; Does not use interval interrupt of watchdog timer,
                        ; Enables watchdog timer operation,
                        ; Window open period of watchdog timer is 50%,
                        ; Overflow time of watchdog timer is 2^9/fIL,
                        ; Stops watchdog timer operation during HALT/STOP mode
      DB        1AH     ; Select 1.63 V for VLVDL
                        ; Select rising edge 1.77 V, falling edge 1.73 V for VLVDH
                        ; Select the interrupt & reset mode as the LVD operation mode
      DB        2DH     ; Select the LV (low voltage main) mode as the flash operation mode
                          and 1 MHz as the frequency of the high-speed on-chip oscillator
      DB        85H     ; Enables on-chip debug operation, does not erase flash memory
                          data when security ID authorization fails
```

When the boot swap function is used during self programming, 000C0H to 000C3H is switched to 010C0H to 010C3H. Describe to 010C0H to 010C3H, therefore, the same values as 000C0H to 000C3H as follows.

```
OPT2  CSEG   AT   010C0H
      DB        36H     ; Does not use interval interrupt of watchdog timer,
                        ; Enables watchdog timer operation,
                        ; Window open period of watchdog timer is 50%,
                        ; Overflow time of watchdog timer is 2^9/fIL,
                        ; Stops watchdog timer operation during HALT/STOP mode
      DB        1AH     ; Select 1.63 V for VLVDL
                        ; Select rising edge 1.77 V, falling edge 1.73 V for VLVDH
                        ; Select the interrupt & reset mode as the LVD operation mode
      DB        2DH     ; Select the LV (low main voltage) mode as the flash operation mode
                          and 1 MHz as the frequency of the high-speed on-chip oscillator
      DB        85H     ; Enables on-chip debug operation, does not erase flash memory
                          data when security ID authorization fails
```

Caution To specify the option byte by using assembly language, use OPT_BYTE as the relocation attribute name of the CSEG pseudo instruction. To specify the option byte to 010C0H to 010C3H in order to use the boot swap function, use the relocation attribute AT to specify an absolute address.

CHAPTER 28 FLASH MEMORY

The RL78 microcontroller incorporates the flash memory to which a program can be written, erased, and overwritten. The flash memory includes the “code flash memory”, in which programs can be executed, and the “data flash memory”, an area for storing data.

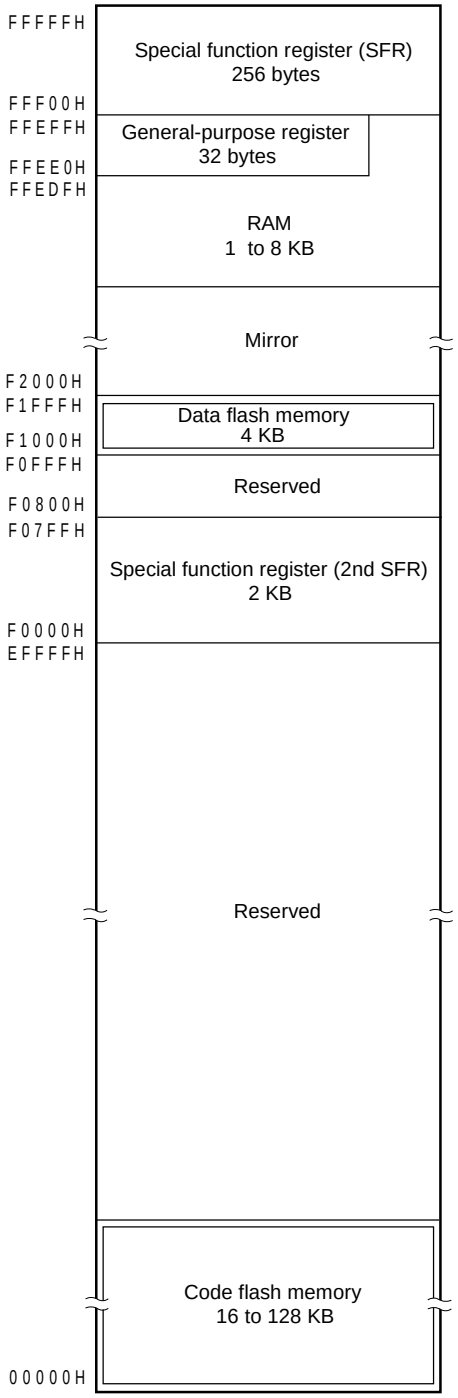

The following methods for programming the flash memory are available.

The code flash memory can be rewritten to through serial programming using a flash memory programmer or an external device (UART communication), or through self-programming.

- Serial programming using flash memory programmer (see **28.1**)
  Data can be written to the flash memory on-board or off-board by using a dedicated flash memory programmer.

- Serial programming using external device (UART communication) (see **28.2**)
  Data can be written to the flash memory on-board through UART communication with an external device (microcontroller or ASIC).

- Self-programming (see **28.6**)
  The user application can execute self-programming of the code flash memory by using the flash self-programming library.

The data flash memory can be rewritten to by using the data flash library during user program execution (background operation). For access and writing to the data flash memory, see **28.8 Data Flash**.

28.1 Serial Programming Using Flash Memory Programmer

The following dedicated flash memory programmer can be used to write data to the internal flash memory of the RL78 microcontroller.

- PG-FP5 and PG-FP6
- E1, E2, E2 Lite, and E20 on-chip debugging emulators

Data can be written to the flash memory on-board or off-board, by using a dedicated flash memory programmer.

(1) On-board programming

The contents of the flash memory can be rewritten after the RL78 microcontroller has been mounted on the target system. The connectors that connect the dedicated flash memory programmer must be mounted on the target system.

(2) Off-board programming

Data can be written to the flash memory with a dedicated program adapter before the RL78 microcontroller is mounted on the target system.

Table 28-1. Wiring Between RL78 Microcontroller and Dedicated Flash Memory Programmer

Pin Configuration of Dedicated Flash Memory Programmer				Pin Name	Pin No.	
					64-pin	80-pin
Signal Name		I/O	Pin Function		LQFP (12×12), LFQFP (10×10)	LQFP (14×14), LFQFP (12×12)
PG-FP5, PG-FP6	E1, E2, E2 Lite, and E20 on-chip debugging emulators					
–	TOOL0	I/O	Transmit/receive signal	TOOL0/P40	5	9
SI/RxD	–	I/O	Transmit/receive signal			
–	RESET_OUT	Output	Reset signal	$\overline{\text{RESET}}$	6	10
$\overline{\text{RESET}}$	–	Output				
V_{DD} Note1		I/O	V_{DD} voltage generation/ power monitoring	V_{DD}	14	18
GND		–	Ground	V_{SS}	13	17
				EV_{SS}	–	–
				REGC Note2	12	16
FLMD1	EMV_{DD}	–	Driving power for TOOL pin	V_{DD}	14	18

Notes 1. The name of the signal for connection in the case of the PG-FP6 is Vcc.

2. Connect the REGC pin to ground via a capacitor (0.47 to 1 µF).

Remark Pins that are not indicated in the above table can be left open when using the flash memory programmer for flash programming.

28.1.1 Programming environment

The environment required for writing a program to the flash memory of the RL78 microcontroller is illustrated below.

Figure 28-1. Environment for Writing Program to Flash Memory

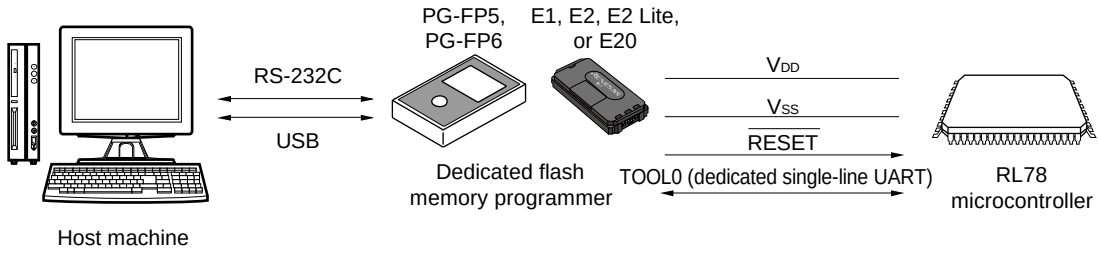

A host machine that controls the dedicated flash memory programmer is necessary.

To interface between the dedicated flash memory programmer and the RL78 microcontroller, the TOOL0 pin is used for manipulation such as writing and erasing via a dedicated single-line UART.

28.1.2 Communication mode

Communication between the dedicated flash memory programmer and the RL78 microcontroller is established by serial communication using the TOOL0 pin via a dedicated single-line UART of the RL78 microcontroller.

Transfer rate: 1 M, 500 k, 250 k, 115.2 kbps

Figure 28-2. Communication with Dedicated Flash Memory Programmer

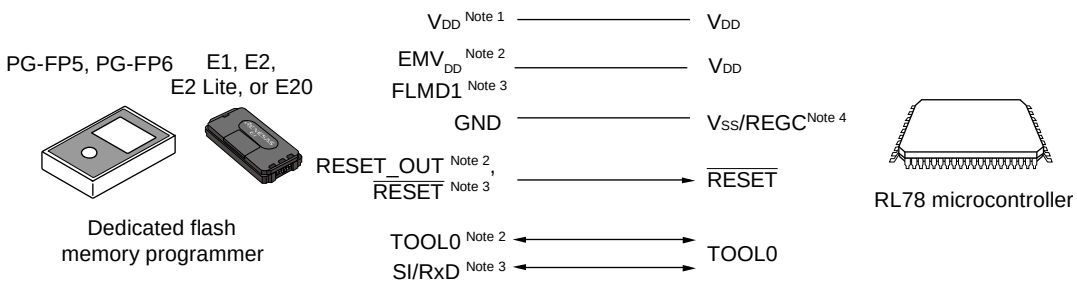

Notes 1. The name of the signal for connection in the case of the PG-FP6 is Vcc.

2. This signal is applicable when using E1, E2, E2 Lite, or E20 on-chip debugging emulator.

3. This signal is applicable when using PG-FP5 or PG-FP6.

4. Connect the REGC pin to ground via a capacitor (0.47 to 1 µF).

The dedicated flash memory programmer generates the following signals for the RL78 microcontroller. See the manual of PG-FP5, PG-FP6, E1, E2, E2 Lite, or E20 on-chip debugging emulator for details.

Table 28-2. Pin Connection

Dedicated Flash Memory Programmer				RL78 Microcontroller
Signal Name		I/O	Pin Function	Pin Name[Note 1]
PG-FP5, PG-FP6	E1, E2, E2 Lite, or E20 On-chip Debugging Emulator			
V_{DD}[Note2]		I/O	V_{DD} voltage generation/power monitoring	V_{DD}
GND		–	Ground	V_{SS}, REGC[Note 3]
FLMD1	EMV_{DD}	–	Driving power for TOOL pin	V_{DD}
$\overline{RESET}$	–	Output	Reset signal	$\overline{RESET}$
–	RESET_OUT	Output		
–	TOOL0	I/O	Transmit/receive signal	TOOL0
SI/RxD	–	I/O	Transmit/receive signal	

Notes 1. Pins to be connected differ with the product. For details, see **Table 28-1**.
2. The name of the signal for connection in the case of the PG-FP6 is Vcc.
3. Connect the REGC pin to ground via a capacitor (0.47 to 1 µF).

28.2 Serial Programming Using External Device (that Incorporates UART)

On-board data writing to the internal flash memory is possible by using the RL78 microcontroller and an external device (a microcontroller or ASIC) connected to a UART.

On the development of flash memory programmer by user, refer to the **RL78 Microcontrollers (RL78 Protocol A) Programmer Edition Application Note (R01AN0815)**.

28.2.1 Programming environment

The environment required for writing a program to the flash memory of the RL78 microcontroller is illustrated below.

Figure 28-3. Environment for Writing Program to Flash Memory

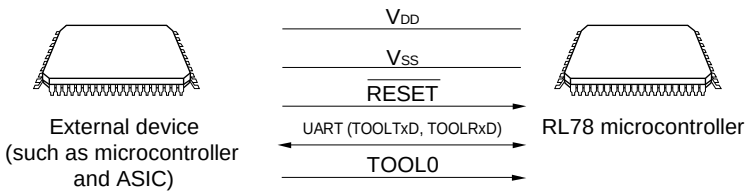

Processing to write data to or delete data from the RL78 microcontroller by using an external device is performed on-board. Off-board writing is not possible.

28.2.2 Communication mode

Communication between the external device and the RL78 microcontroller is established by serial communication using the TOOLTxD and TOOLRxD pins via the dedicated UART of the RL78 microcontroller.

Transfer rate: 1 M, 500 k, 250 k, 115.2kbps

Figure 28-4. Communication with External Device

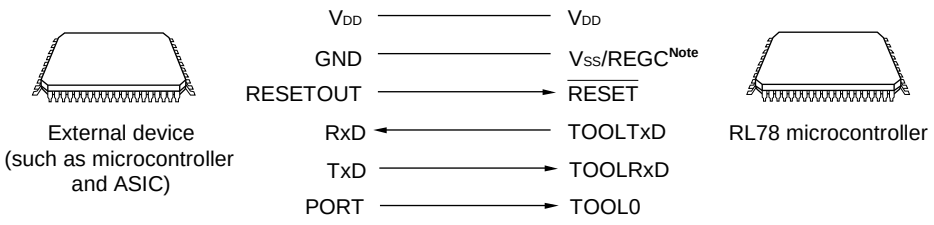

Note Connect REGC pin to ground via a capacitor (0.47 to 1 μF).

The external device generates the following signals for the RL78 microcontroller.

Table 28-3. Pin Connection

External Device			RL78 Microcontroller
Signal Name	I/O	Pin Function	Pin Name
V_{DD}	I/O	V_{DD} voltage generation/power monitoring	V_{DD}
GND	–	Ground	V_{SS}, REGC[Note]
RESETOUT	Output	Reset signal output	$\overline{\text{RESET}}$
RxD	Input	Receive signal	TOOLTxD
TxD	Output	Transmit signal	TOOLRxD
PORT	Output	Mode signal	TOOL0

Note Connect REGC pin to ground via a capacitor (0.47 to 1 μF).

28.3 Connection of Pins on Board

To write the flash memory on-board by using the flash memory programmer, connectors that connect the dedicated flash memory programmer must be provided on the target system. First provide a function that selects the normal operation mode or flash memory programming mode on the board.

When the flash memory programming mode is set, all the pins not used for programming the flash memory are in the same status as immediately after reset. Therefore, if the external device does not recognize the state immediately after reset, the pins must be handled as described below.

Remark Refer to flash programming mode, see **28.4.2 Flash memory programming mode**.

28.3.1 P40/TOOL0 pin

In the flash memory programming mode, connect this pin to the dedicated flash memory programmer via an external 1 kΩ pull-up resistor.

When this pin is used as the port pin, use that by the following method.

When used as an input pin: Input of low-level is prohibited for t_{HD} period after external pin reset release. Furthermore, when this pin is used via pull-down resistors, use the 500 kΩ or more resistors.

When used as an output pin: When this pin is used via pull-down resistors, use the 500 kΩ or more resistors.

Remarks 1. t_{HD}: How long to keep the TOOL0 pin at the low level from when the external and internal resets end for setting of the flash memory programming mode (see **32.11** or **33.11 Timing Specifications for Switching Flash Memory Programming Modes**)

2. The SAU and IICA pins are not used for communication between the RL78 microcontroller and dedicated flash memory programmer, because single-line UART (TOOL0 pin) is used.

28.3.2 $\overline{\text{RESET}}$ pin

Signal conflict will occur if the reset signal of the dedicated flash memory programmer and external device are connected to the $\overline{\text{RESET}}$ pin that is connected to the reset signal generator on the board. To prevent this conflict, isolate the connection with the reset signal generator.

The flash memory will not be correctly programmed if the reset signal is input from the user system while the flash memory programming mode is set. Do not input any signal other than the reset signal of the dedicated flash memory programmer and external device.

Figure 28-5. Signal Conflict ($\overline{\text{RESET}}$ Pin)

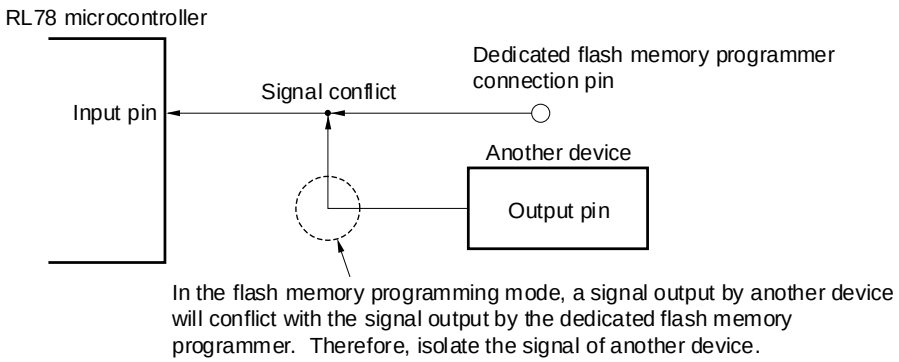

28.3.3 Port pins

When the flash memory programming mode is set, all the pins not used for flash memory programming enter the same status as that immediately after reset. If external devices connected to the ports do not recognize the port status immediately after reset, the port pin must be connected to either to V_{DD}, or V_{SS}, via a resistor.

28.3.4 REGC pin

Connect the REGC pin to GND via a capacitor having excellent characteristics (0.47 to 1 µF) in the same manner as during normal operation. Also, use a capacitor with good characteristics, since it is used to stabilize internal voltage.

28.3.5 X1 and X2 pins

Connect X1 and X2 in the same status as in the normal operation mode.

Remark In the flash memory programming mode, the high-speed on-chip oscillator clock (f_{IH}) is used.

28.3.6 Power supply

To use the supply voltage output of the flash memory programmer, connect the V_{DD}[Note] pin to V_{DD} of the flash memory programmer, and the V_{SS} pin to GND of the flash memory programmer.

To use the on-board supply voltage, connect in compliance with the normal operation mode.

However, when writing to the flash memory by using the flash memory programmer and using the on-board supply voltage, be sure to connect the V_{DD} and V_{SS} pins to V_{DD}[Note] and GND of the flash memory programmer to use the power monitor function with the flash memory programmer.

Note The name of the signal for connection in the case of the PG-FP6 is Vcc.

28.4 Serial Programming Method

28.4.1 Controlling serial programming

The following figure illustrates a flow for rewriting the code flash memory through serial programming.

Figure 28-6. Code Flash Memory Manipulation Procedure

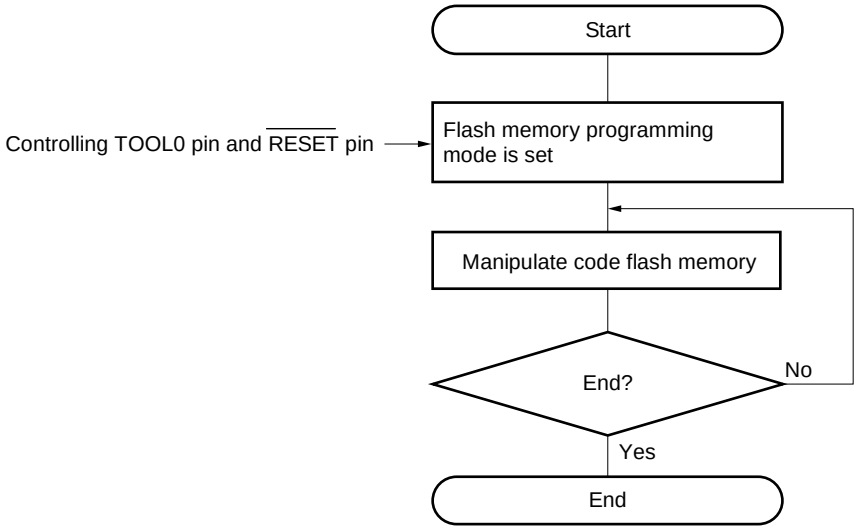

28.4.2 Flash memory programming mode

To rewrite the contents of the code flash memory through serial programming, specify the flash memory programming mode. To enter the mode, set as follows.

<When programming by using the dedicated flash memory programmer>

Communication from the dedicated flash memory programmer is performed to automatically switch to the flash memory programming mode.

<Serial programming using an external device (UART communication)>

Set the TOOL0 pin to the low level, and then cancel the reset (see **Table 28-4**). After that, enter flash memory programming mode according to the procedures <1> to <4> shown in **Figure 28-7**. For details, refer to the **RL78 Microcontrollers (RL78 Protocol A) Programmer Edition Application Note (R01AN0815)**.

Table 28-4. Relationship Between TOOL0 Pin and Operation Mode After Reset Release

TOOL0	Operation Mode
V_{DD}	Normal operation mode
0 V	Flash memory programming mode

Figure 28-7. Setting of Flash Memory Programming Mode

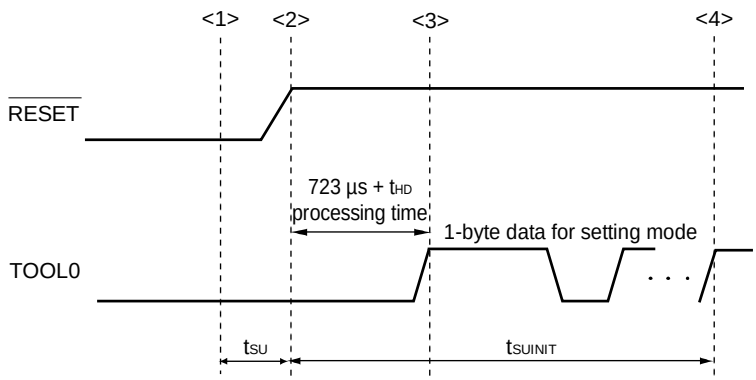

<1> The low level is input to the TOOL0 pin.
<2> The external reset ends (POR and LVD reset must end before the external reset ends.).
<3> The TOOL0 pin is set to the high level.
<4> Baud rate setting by UART reception is completed.

Remark t_{SUINIT}: The segment shows that it is necessary to finish specifying the initial communication settings within 100 ms from when the resets end.

t_{SU}: How long from when the TOOL0 pin is placed at the low level until an external reset ends

t_{HD}: How long to keep the TOOL0 pin at the low level from when the external and internal resets end (the flash firmware processing time is excluded)

For details, see **32.11** or **33.11 Timing Specifications for Switching Flash Memory Programming Modes**.

There are two flash memory programming modes: wide voltage mode and full speed mode. The supply voltage value applied to the microcontroller during write operations and the setting information of the user option byte for setting of the flash memory programming mode determine which mode is selected.

When a dedicated flash memory programmer is used for serial programming, setting the voltage on GUI selects the mode automatically.

Table 28-5. Programming Modes and Voltages at Which Data Can Be Written, Erased, or Verified

Power Supply Voltage (V_{DD})	User Option Byte Setting for Switching to Flash Memory Programming Mode		Flash Programming Mode
	Flash Operation Mode	Operating Frequency	
2.7 V ≤ V_{DD} ≤ 5.5 V	Blank state		Full speed mode
	HS (high speed main) mode	1 MHz to 24 MHz	Full speed mode
	LS (low speed main) mode	1 MHz to 8 MHz	Wide voltage mode
	LV (low voltage main) mode	1 MHz to 4 MHz	Wide voltage mode
2.4 V ≤ V_{DD} < 2.7 V	Blank state		Full speed mode
	HS (high speed main) mode	1 MHz to 16 MHz	Full speed mode
	LS (low speed main) mode	1 MHz to 8 MHz	Wide voltage mode
	LV (low voltage main) mode	1 MHz to 4 MHz	Wide voltage mode
1.8 V ≤ V_{DD} < 2.4 V	Blank state		Wide voltage mode
	LS (low speed main) mode	1 MHz to 8 MHz	Wide voltage mode
	LV (low voltage main) mode	1 MHz to 4 MHz	Wide voltage mode

Remarks 1. Using both the wide voltage mode and full speed mode imposes no restrictions on writing, deletion, or verification.

2. For details about communication commands, see **28.4.4 Communication commands**.

28.4.3 Selecting communication mode

Communication mode of the RL78 microcontroller as follows.

Table 28-6. Communication Modes

Communication Mode	Standard Setting[Note 1]				Pins Used
	Port	Speed[Note 2]	Frequency	Multiply Rate	
1-line mode (when flash memory programmer is used, or when external device is used)	UART	115200 bps, 250000 bps, 500000 bps, 1 Mbps	–	–	TOOL0
Dedicated UART (when external device is used)	UART	115200 bps, 250000 bps, 500000 bps, 1 Mbps	–	–	TOOLTxD, TOOLRxD

Notes 1. Selection items for Standard settings on GUI of the flash memory programmer.

2. Because factors other than the baud rate error, such as the signal waveform slew, also affect UART communication, thoroughly evaluate the slew as well as the baud rate error.

28.4.4 Communication commands

The RL78 microcontroller executes serial programming through the commands listed in **Table 28-7.**

The signals sent from the dedicated flash memory programmer or external device to the RL78 microcontroller are called commands, and programming functions corresponding to the commands are executed. For details, refer to the **RL78 Microcontrollers (RL78 Protocol A) Programmer Edition Application Note (R01AN0815)**.

Table 28-7. Flash Memory Control Commands

Classification	Command Name	Function
Verify	Verify	Compares the contents of a specified area of the flash memory with data transmitted from the programmer.
Erase	Block Erase	Erases a specified area in the flash memory.
Blank check	Block Blank Check	Checks if a specified block in the flash memory has been correctly erased.
Write	Programming	Writes data to a specified area in the flash memory[Note].
Getting information	Silicon Signature	Gets the RL78 microcontroller information (such as the part number, flash memory configuration, and programming firmware version).
	Checksum	Gets the checksum data for a specified area.
Security	Security Set	Sets security information.
	Security Get	Gets security information.
	Security Release	Release setting of prohibition of writing.
Others	Reset	Used to detect synchronization status of communication.
	Baud Rate Set	Sets baud rate when UART communication mode is selected.

Note Confirm that no data has been written to the write area. Because data cannot be erased after block erase is prohibited, do not write data if the data has not been erased.

Product information (such as product name and firmware version) can be obtained by executing the “Silicon Signature” command.

Table 28-8 is a list of signature data and **Table 28-9** shows an example of signature data.

Table 28-8. Signature Data List

Field Name	Description	Number of Transmit Data
Device code	The serial number assigned to the device	3 bytes
Device name	Device name (ASCII code)	10 bytes
Code flash memory area last address	Last address of code flash memory area (Sent from lower address. Example: 00000H to 0FFFFH (64 KB) → FFH, FFH, 00H)	3 bytes
Data flash memory area last address	Last address of data flash memory area (Sent from lower address. Example: F1000H to F1FFFH (4 KB) → FFH, 1FH, 0FH)	3 bytes
Firmware version	Version information of firmware for programming (Sent from upper address. Example: From Ver. 1.23 → 01H, 02H, 03H)	3 bytes

Table 28-9. Example of Signature Data

Field Name	Description	Number of Transmit Data	Data (Hexadecimal)
Device code	RL78 protocol A	3 bytes	10 00 06
Device name	RSF10WLE	10 bytes	52 = “R” 35 = “5” 46 = “F” 31 = “1” 30 = “0” 57 = “W” 4C = “L” 45 = “E” 20 = “ ” 20 = “ ”
Code flash memory area last address	Code flash memory area 00000H to 0FFFFH (64 KB)	3 bytes	FF FF 00
Data flash memory area last address	Data flash memory area F1000H to F1FFFH (4 KB)	3 bytes	FF 1F 0F
Firmware version	Ver.1.23	3 bytes	01 02 03

28.5 Processing Time for Each Command When Dedicated Flash Memory Programmer Is in Use (Reference Value)

The following tables show the processing time for each command (reference value) when PG-FP6 is used as a dedicated flash memory programmer.

Table 28-10. Processing Time for Each Command When PG-FP6 Is in Use (Reference Value)

PG-FP6 Command	Code Flash					
	16 Kbytes	32 Kbytes	48 Kbytes	64 Kbytes	96 Kbytes	128 Kbytes
Erasing	0.7 s	0.8 s	0.9 s	1.0 s	1.2 s	1.4 s
Writing	0.8 s	1.3 s	1.9 s	2.2 s	3.0 s	3.7 s
Verification	0.7 s	1.1 s	1.6 s	1.9 s	2.6 s	3.3 s
Writing after erasing	1.2 s	1.8 s	2.5 s	3.0 s	3.9 s	4.8 s

Remark The command processing times (reference values) shown in the table are typical values under the following conditions.
Port: TOOL0 (single-line UART)
Speed: 1,000,000 bps
Mode: Full speed mode (flash operation mode: HS (high speed main) mode)

28.6 Self-Programming

The RL78 microcontroller supports a self-programming function that can be used to rewrite the code flash memory via a user program. Because this function allows a user application to rewrite the code flash memory by using the flash self-programming library, it can be used to upgrade the program in the field.

Cautions 1. The self-programming function cannot be used when the CPU operates with the subsystem clock.

2. To prohibit an interrupt during self-programming, in the same way as in the normal operation mode, execute the flash self-programming library in the state where the IE flag is cleared (0) by the DI instruction.

To enable an interrupt, clear (0) the interrupt mask flag to accept in the state where the IE flag is set (1) by the EI instruction, and then execute the flash self-programming library.

3. The high-speed on-chip oscillator should be kept operating during self-programming. If it is kept stopping, the high-speed on-chip oscillator clock should be operated (HIOSTOP = 0). The flash self-programming library should be executed after 30 μs have elapsed when FRQSEL4 of the user option byte (000C2H) is 0 or 80 μs have elapsed when FRQSEL4 is 1.

Remark For details of the self-programming function, refer to the **RL78 Microcontroller Flash Self Programming Library Type01 User's Manual (R01US0050).**

The self-programming function has two flash memory programming modes; wide voltage mode and full speed mode.

Specify the mode that corresponds to the flash operation mode specified in bits CMODE1 and CMODE0 in option byte 000C2H.

Specify the full speed mode when the HS (high speed main) mode is specified. Specify the wide voltage mode when the LS (low speed main) mode or LV (low voltage main) mode is specified.

If the argument fsl_flash_voltage_u08 is 00H when the FSL_Init function of the flash self-programming library provided by Renesas Electronics is executed, full speed mode is specified. If the argument is other than 00H, the wide voltage mode is specified.

Remark Using both the wide voltage mode and full speed mode imposes no restrictions on writing, erasing, or verification.

28.6.1 Self-programming procedure

The following figure illustrates a flow for rewriting the code flash memory by using a flash self-programming library.

Figure 28-8. Flow of Self Programming (Rewriting Flash Memory)

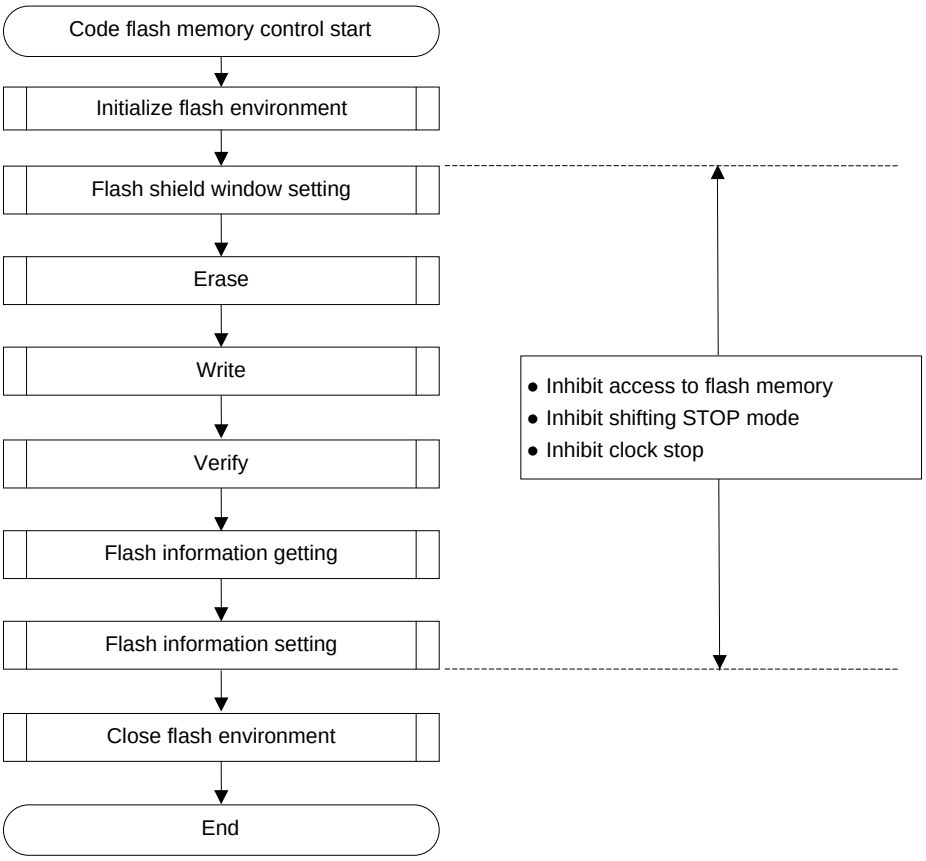

28.6.2 Boot swap function

If rewriting the boot area failed by temporary power failure or other reasons, restarting a program by resetting or overwriting is disabled due to data destruction in the boot area.

The boot swap function is used to avoid this problem.

Before erasing boot cluster 0[Note], which is a boot area, by self-programming, write a new boot program to boot cluster 1 in advance. When the program has been correctly written to boot cluster 1, swap this boot cluster 1 and boot cluster 0 by using the set information function of the firmware of the RL78 microcontroller, so that boot cluster 1 is used as a boot area. After that, erase or write the original area, boot cluster 0.

As a result, even if a power failure occurs while the area is being rewritten, the program is executed correctly because it is booted from boot cluster 1 to be swapped when the program is reset and started next.

Note A boot cluster is a 4 KB area and boot clusters 0 and 1 are swapped by the boot swap function.

Figure 28-9. Boot Swap Function

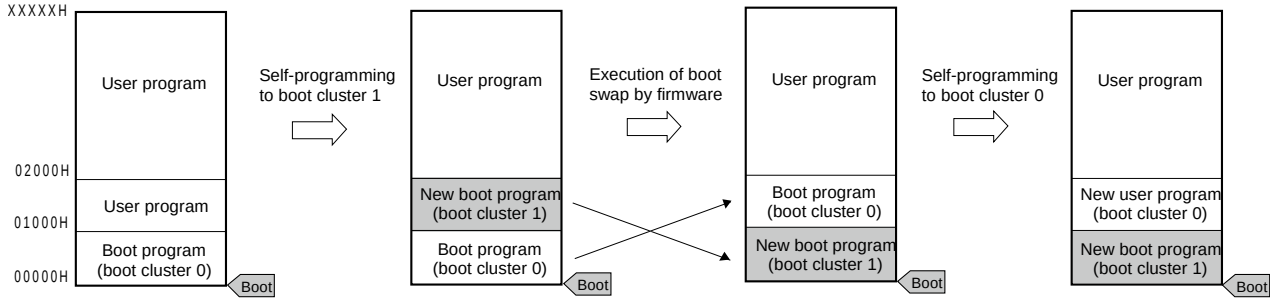

In an example of above figure, it is as follows.

Boot cluster 0: Boot area before boot swap

Boot cluster 1: Boot area after boot swap

Figure 28-10. Example of Executing Boot Swapping

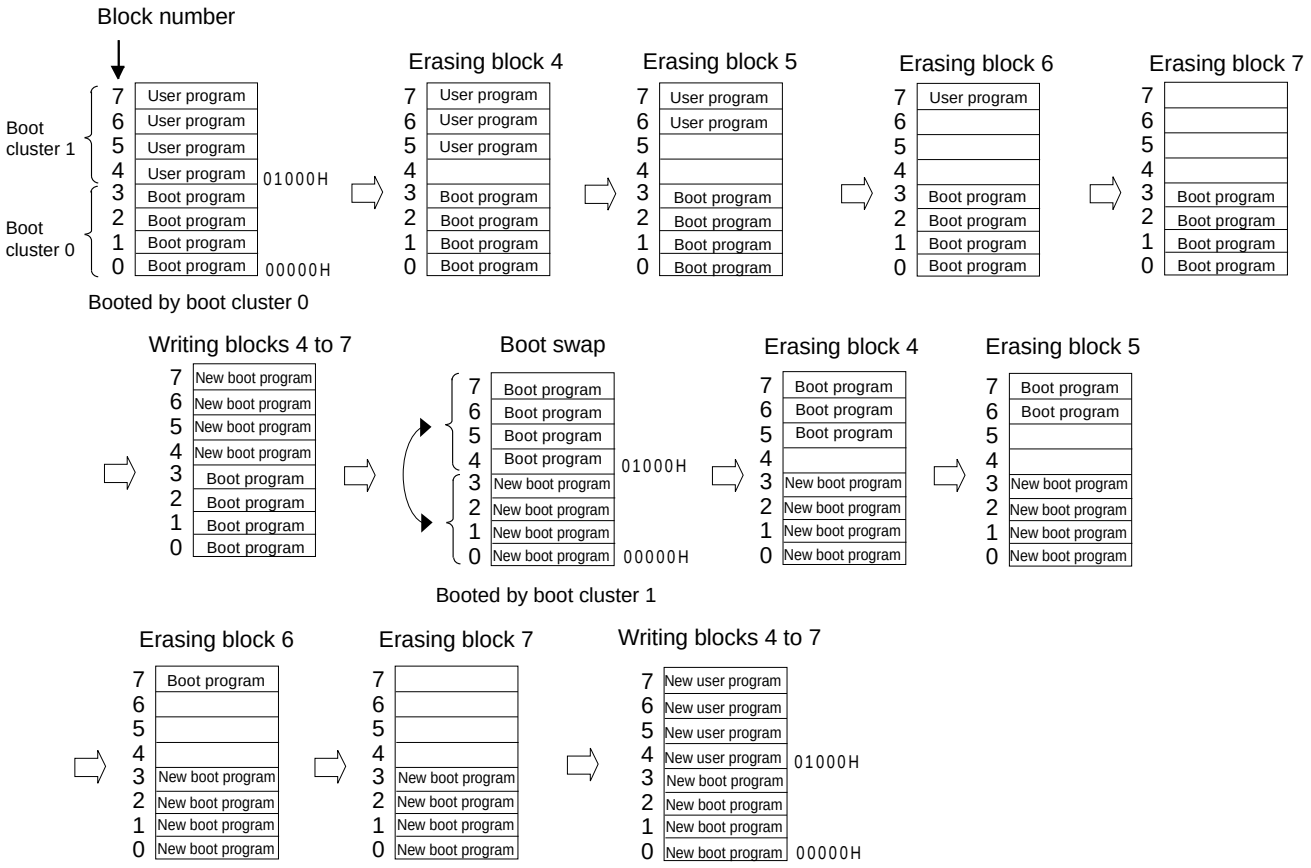

28.6.3 Flash shield window function

The flash shield window function is provided as one of the security functions for self programming. It disables writing to and erasing areas outside the range specified as a window only during self programming.

The window range can be set by specifying the start and end blocks. The window range can be set or changed during both serial programming and self-programming.

Writing to and erasing areas outside the window range are disabled during self programming. During serial programming, however, areas outside the range specified as a window can be written and erased.

Figure 28-11. Flash Shield Window Setting Example
(Target Devices: R5F10WLE, Start Block: 04H, End Block: 06H)

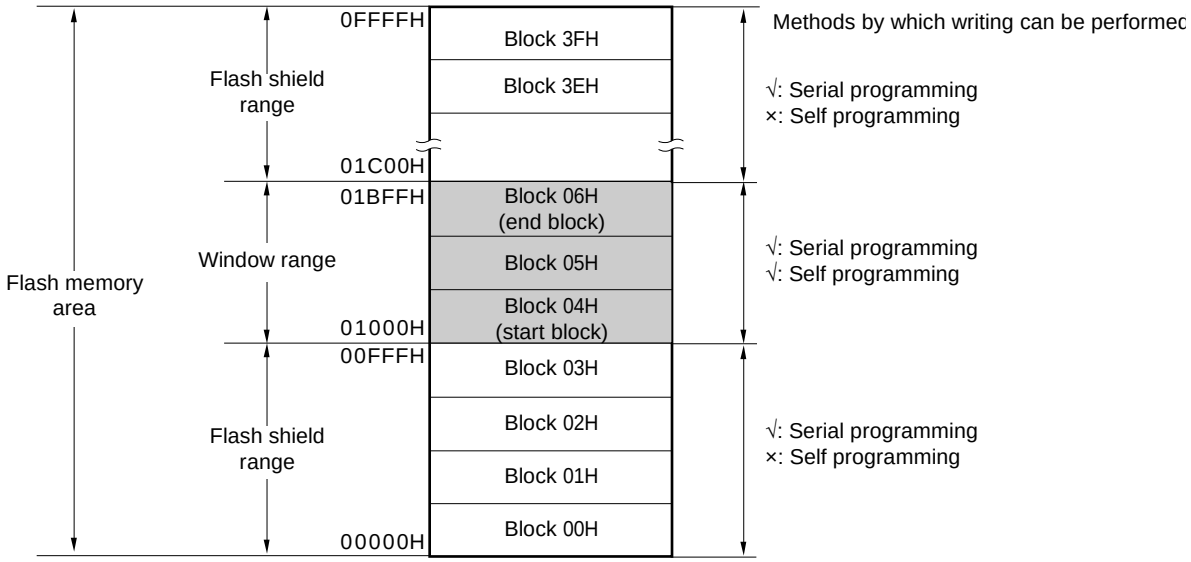

Cautions 1. If the rewrite-prohibited area of the boot cluster 0 overlaps with the flash shield window range, prohibition to rewrite the boot cluster 0 takes priority.

2. The flash shield window can only be used for the code flash memory (and is not supported for the data flash memory).

Table 28-11. Relationship Between Flash Shield Window Function Setting/Change Methods and Commands

Programming Conditions	Window Range Setting/Change Methods	Execution Commands	
		Block Erase	Write
Self-programming	Specify the starting and ending blocks by the flash self-programming library.	Block erasing is enabled only within the window range.	Writing is enabled only within the range of window range.
Serial programming	Specify the starting and ending blocks on GUI of dedicated flash memory programmer, etc.	Block erasing is enabled also outside the window range.	Writing is enabled also outside the window range.

Remark See **28.7 Security Settings** to prohibit writing/erasing during serial programming.

28.7 Security Settings

The RL78 microcontroller supports a security function that prohibits rewriting the user program written to the internal flash memory, so that the program cannot be changed by an unauthorized person.

The operations shown below can be performed using the Security Set command.

- Disabling block erase
  Execution of the block erase command for a specific block in the flash memory is prohibited during serial programming. However, blocks can be erased by means of self programming.

- Disabling write
  Execution of the write command for entire blocks in the flash memory is prohibited during serial programming. However, blocks can be written by means of self programming.
  After the security settings are specified, releasing the security settings by the Security Release command is enabled by a reset.

- Disabling rewriting boot cluster 0
  Execution of the block erase command and write command on boot cluster 0 (00000H to 00FFFH) in the code flash memory is prohibited by this setting.

The block erase, write commands and rewriting boot cluster 0 are enabled by the default setting when the flash memory is shipped. Security can be set by serial programming and self programming. Each security setting can be used in combination.

Table 28-11 shows the relationship between the erase and write commands when the RL78 microcontroller security function is enabled.

Caution The security function of the dedicated flash programmer does not support self-programming.

Remark To prohibit writing and erasing during self-programming, use the flash shield window function (see **28.6.3** for detail).

Table 28-12. Relationship Between Enabling Security Function and Command

(1) During serial programming

Valid Security	Executed Command	
	Block Erase	Write
Prohibition of block erase	Blocks cannot be erased.	Can be performed.[Note]
Prohibition of writing	Blocks can be erased.	Cannot be performed.
Prohibition of rewriting boot cluster 0	Boot cluster 0 cannot be erased.	Boot cluster 0 cannot be written.

Note Confirm that no data has been written to the write area. Because data cannot be erased after block erase is prohibited, do not write data if the data has not been erased.

(2) During self programming

Valid Security	Executed Command	
	Block Erase	Write
Prohibition of block erase	Blocks can be erased.	Can be performed.
Prohibition of writing		
Prohibition of rewriting boot cluster 0	Boot cluster 0 cannot be erased.	Boot cluster 0 cannot be written.

Remark To prohibit writing and erasing during self-programming, use the flash shield window function (see **28.6.3** for detail).

Table 28-13. Setting Security in Each Programming Mode

(1) During serial programming

Security	Security Setting	How to Disable Security Setting
Prohibition of block erase	Set via GUI of dedicated flash memory programmer, etc.	Cannot be disabled after set.
Prohibition of writing		Set via GUI of dedicated flash memory programmer, etc.
Prohibition of rewriting boot cluster 0		Cannot be disabled after set.

Caution Releasing the setting of prohibition of writing is enabled only when the security is not set as the block erase prohibition and the boot cluster 0 rewrite prohibition with code flash memory area and data flash memory area being blanks.

(2) During self programming

Security	Security Setting	How to Disable Security Setting
Prohibition of block erase	Set by using flash self programming library.	Cannot be disabled after set.
Prohibition of writing		Cannot be disabled during self-programming (set via GUI of dedicated flash memory programmer, etc. during serial programming).
Prohibition of rewriting boot cluster 0		Cannot be disabled after set.

28.8 Data Flash

28.8.1 Data flash overview

An overview of the data flash memory is provided below.

- The user program can rewrite the data flash memory by using the data flash library. For details, refer to the **RL78 Family Data Flash Library User's Manual**.
- The data flash memory can also be rewritten to through serial programming using the dedicated flash memory programmer or an external device.
- The data flash can be erased in 1-block (1 KB) units.
- The data flash can be accessed only in 8-bit units.
- The data flash can be directly read by CPU instructions.
- Instructions can be executed from the code flash memory while rewriting the data flash memory (that is, background operation (BGO) is supported).
- Because the data flash memory is an area exclusively used for data, it cannot be used to execute instructions.
- Accessing the data flash memory is not possible while rewriting the code flash memory (during self-programming).
- Manipulating the DFLCTL register is not possible while rewriting the data flash memory
- Transition to the HALT/STOP mode is not possible while rewriting the data flash memory

Cautions 1. The data flash memory is stopped after a reset is canceled. The data flash control register (DFLCTL) must be set up in order to use the data flash memory.

2. The high-speed on-chip oscillator should be kept operating during data flash rewrite.
If it is kept stopping, the high-speed on-chip oscillator clock should be operated (HIOSTOP = 0).
The data flash library should be executed after 30 μs have elapsed when FRQSEL4 of the user option byte (000C2H) is 0 or 80 μs have elapsed when FRQSEL4 is 1.

Remark For details of flash programming mode, see **28.6 Self-Programming**.

28.8.2 Register controlling data flash memory

28.8.2.1 Data flash control register (DFLCTL)

This register is used to enable or disable accessing to the data flash.

The DFLCTL register is set by a 1-bit or 8-bit memory manipulation instruction.

Reset signal generation sets this register to 00H.

Figure 28-12. Format of Data Flash Control Register (DFLCTL)

Address: F0090H After reset: 00H R/W

Symbol	7	6	5	4	3	2	1	<0>
DFLCTL	0	0	0	0	0	0	0	DFLEN

DFLEN	Data flash access control
0	Disables data flash access
1	Enables data flash access

Caution Manipulating the DFLCTL register is not possible while rewriting the data flash memory.

28.8.3 Procedure for accessing data flash memory

The data flash memory is stopped after a reset ends. To access the data flash, make initial settings according to the following procedure.

<1> Write 1 to bit 0 (DFLEN) of the data flash control register (DFLCTL).

<2> Wait for the setup to finish for software timer, etc.

The time setup takes differs for each flash operation mode for the main clock.

<Setup time for each flash operation mode>

- HS (High-speed main): 5 μs
- LS (Low-speed main): 720 ns
- LV (Low-voltage main): 10 μs

<3> After the wait, the data flash memory can be accessed.

Cautions 1. Accessing the data flash memory is not possible during the setup time.

2. Transition to the STOP mode is not possible during the setup time. To enter the STOP mode during the setup time, clear DFLEN to 0 and then execute the STOP instruction.

3. The high-speed on-chip oscillator should be kept operating during data flash rewrite. If it is kept stopping, the high-speed on-chip oscillator clock should be operated (HIOSTOP = 0). The flash data library should be executed after 30 μs have elapsed when FRQSEL4 of the user option byte (000C2H) is 0 or 80 μs have elapsed when FRQSEL4 is 1.

4. Once the data flash memory is read while the subsystem clock is selected as the CPU/peripheral hardware clock (CLS = 1), follow the procedure listed as steps (1) to (3) below, in that order, to read the data flash area after switching the CPU/peripheral hardware clock from the subsystem clock to the main system clock.

(1) Make sure the main system clock is selected as the CPU/peripheral hardware clock (CLS = 0).

(2) Read data from any location in the data flash area. The value read at this point is undefined.

(3) Wait for the time listed below according to the operating mode, then read data from the desired parts of the data flash area.
HS (high-speed main) mode: 5 μs
LS (low-speed main) mode: 1 μs
LV (low-voltage main) mode: 10 μs

After initialization, the data flash memory can be read or rewritten by using a CPU instruction or flash data library.

If the DMA controller operates when the data flash memory is accessed, follow either of these procedures:

(A) Hold pending/forced termination of DMA transfer

Before reading the data flash memory, hold DMA transfer pending of all the channels in use. Note that, wait for at least 3 clocks (f_{CLK}) after setting the DWAITn bit to 1 and before reading the data flash memory. After reading the data flash, cancel holding of DMA transfer pending by clearing the DWAITn bit to 0, or before reading the data flash memory, forcibly terminate DMA transfer in accordance with **18.5.5 Forced termination by software**. Resume DMA transfer after reading the data flash memory.

(B) Accessing data flash memory by using library

Access the data flash memory by using the latest flash data library.

(C) Inserting NOP

Insert a NOP instruction immediately before the instruction that reads the data flash memory.

<Example>

```
MOVW HL, !addr16 ; Reads RAM.
NOP ; Insert NOP instruction before reading the data flash memory.
MOV A,[DE] ; Reads the data flash memory.
```

If a high-level language such as C is used, however, the compiler may generate two instructions per code. In this case, read the data flash memory in procedure (A) or (B) because the NOP instruction is not inserted immediately before the data flash reading instruction.

Remarks 1. DWAITn: Bit 4 of DMA mode control register n (DMCn)

2. f_{CLK}: CPU/peripheral hardware clock frequency

CHAPTER 29 ON-CHIP DEBUGGING

29.1 Connection between the E1, E2, E2 Lite, or E20 On-chip Debugging Emulator and RL78/L13

On-chip debugging is handled by connecting the RL78 microcontroller and host machine through the E1, E2, E2 Lite, or E20 on-chip debugging emulator. Pins V_{DD}, $\overline{RESET}$, TOOL0, and V_{SS} are used for connection to the emulator. Serial communications are handled through the TOOL0 pin as a single-line UART connection.

Caution RL78 microcontrollers have on-chip debugging functionality for use in the development and evaluation of user systems. Do not use on-chip debugging with products designated as part of mass production, because using this function may cause the guaranteed number of times the flash memory is rewriting to be exceeded, and product reliability therefore cannot be guaranteed. Renesas Electronics is not liable for problems occurring when on-chip debugging is used with products designated as part of mass production.

Figure 29-1. Example of Connection between the E1, E2, E2 Lite, or E20 On-chip Debugging Emulator and RL78/L13

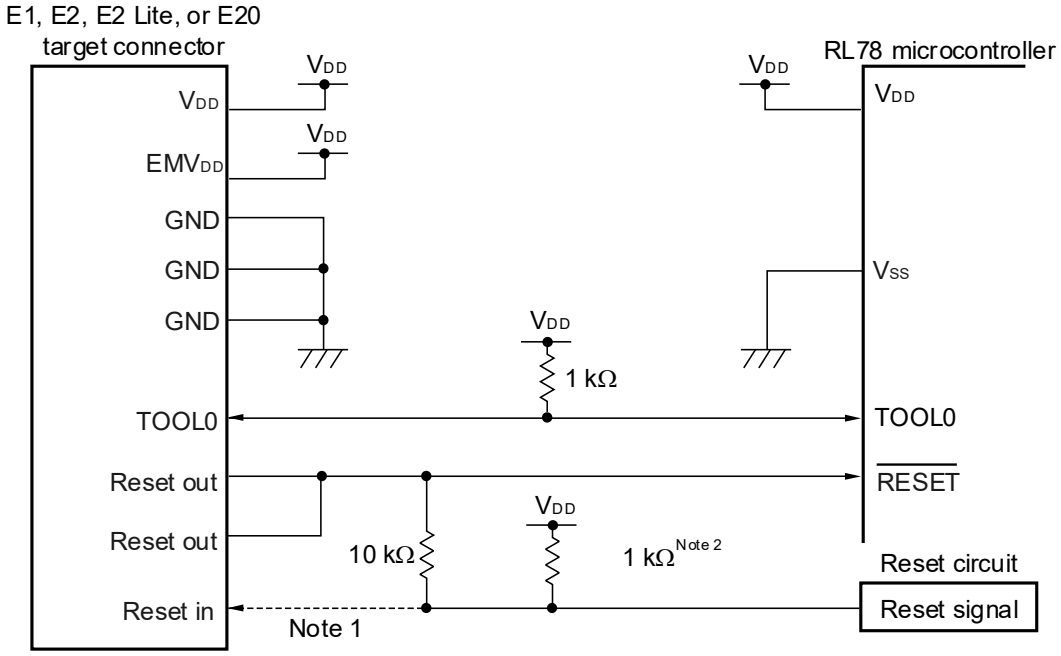

Notes 1. The connection shown as a broken line is not required for serial programming.

2. If the reset circuit on the target system does not have a buffer so the reset signal is only generated through resistors and capacitors, this pull-up resistor is not required.

Caution This circuit diagram is an example where the reset signal is output from an N-channel open-drain buffer with an output resistance no greater than 100 Ω.

29.2 On-Chip Debug Security ID

To protect against third parties reading the contents of memory, the RL78 microcontroller has on-chip debugging control bits in the flash memory at 000C3H (see **CHAPTER 27 OPTION BYTES**), and an area to hold the security ID code for on-chip debugging in the range from 000C4H to 000CDH. When boot swapping is to be used in self-programming, 000C3H and the range from 000C4H to 000CDH are respectively replaced with 010C3H and the range from 010C4H to 010CDH. Therefore, set the same value as the settings in 000C3H and the range from 000C4H to 000CDH in 010C3H and the range from 010C4H to 010CDH.

Table 29-1. On-chip Debug Security ID

Address	On-chip Debug Security ID
000C4H to 000CDH	Any 10-byte ID code Note (other than FFH)
010C4H to 010CDH	

Note The setting FFFFFFFFFFFFFFFFFFFFH is not allowed.

29.3 Allocation of Memory Spaces to User Resources

Allocation of memory spaces to user resources is required before communications between the RL78 microcontroller and the E1, E2, E2 Lite, or E20 on-chip debugging emulator, and on-chip debugging, can proceed. If you are using an assembler or compiler from Renesas Electronics, you can use linker options to allocate the memory spaces.

(1) Allocation of memory spaces to the user program

The shaded areas in Figure 29-2 are reserved for the monitor program for debugging, and user programs and data cannot be allocated to these areas. When using on-chip debugging, ensure that nothing is allocated to these areas so that they can be secured for on-chip debugging. Also ensure that the contents of these areas are not modified by the user program.

Figure 29-2. Memory Spaces Allocated for Use by the Monitor Program for Debugging

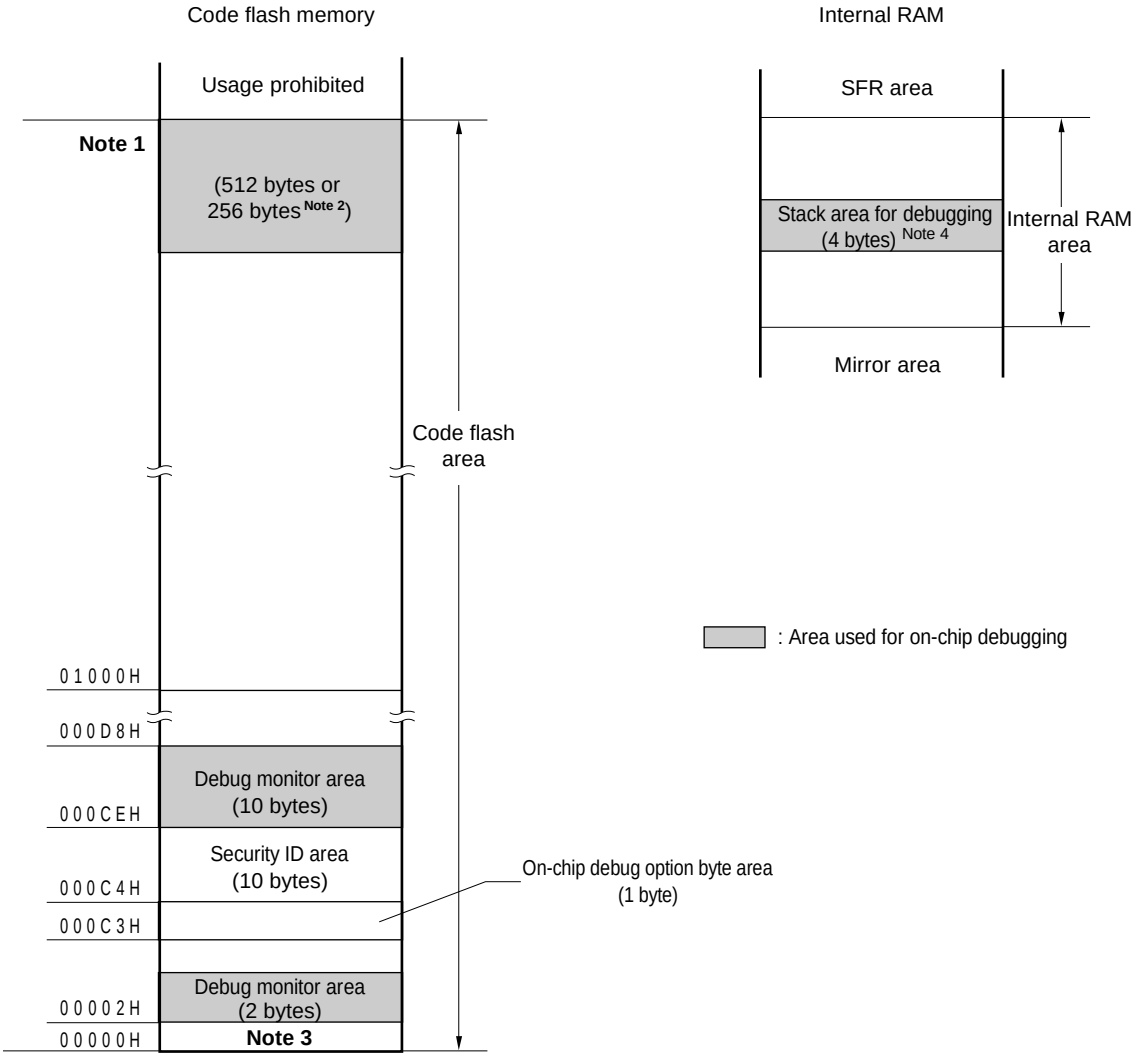

Notes 1. The address depends on the products as shown below.

Products	Address of **Note 1**
R5F10WLA, R5F10WMA	03FFFH
R5F10WLC, R5F10WMC	07FFFH
R5F10WLD, R5F10WMD	0BFFFH
R5F10WLE, R5F10WME	0FFFFH
R5F10WLF, R5F10WMF	17FFFH
R5F10WLG, R5F10WMG	1FFFFH

2. When the realtime RAM monitor (RRM) and dynamic memory modification (DMM) are not to be used, the size of this area is 256 bytes.

3. During debugging, the reset vector is relocated to the address of the monitor program.

4. Since this area is allocated immediately below the portion of the main stack area that is currently in use, the address range of this area depends on the amount of the stack in use other than for debugging. Accordingly, four additional bytes are required for the entire stack area. In the case of self-programming, this is a 12-byte area, so 12 additional bytes are required.

CHAPTER 30 BCD CORRECTION CIRCUIT

30.1 BCD Correction Circuit Function

The result of addition/subtraction of the BCD (binary-coded decimal) code and BCD code can be obtained as BCD code with this circuit.

The decimal correction operation result is obtained by performing addition/subtraction having the A register as the operand and then adding/subtracting the BCD correction result register (BCDADJ).

30.2 Registers Used by BCD Correction Circuit

The BCD correction circuit uses the following registers.

● BCD correction result register (BCDADJ)

30.2.1 BCD correction result register (BCDADJ)

The BCDADJ register stores correction values for obtaining the add/subtract result as BCD code through add/subtract instructions using the A register as the operand.

The value read from the BCDADJ register varies depending on the value of the A register when it is read and those of the CY and AC flags.

The BCDADJ register is read by an 8-bit memory manipulation instruction.

Reset input sets this register to undefined.

Figure 30-1. Format of BCD Correction Result Register (BCDADJ)

Address: F00FEH After reset: undefined R

Symbol	7	6	5	4	3	2	1	0
BCDADJ								

30.3 BCD Correction Circuit Operation

The basic operation of the BCD correction circuit is as follows.

(1) Addition: Calculating the result of adding a BCD code value and another BCD code value by using a BCD code value

<1> The BCD code value to which addition is performed is stored in the A register.

<2> By adding the value of the A register and the second operand (value of one more BCD code to be added) as are in binary, the binary operation result is stored in the A register and the correction value is stored in the BCD correction result register (BCDADJ).

<3> Decimal correction is performed by adding in binary the value of the A register (addition result in binary) and the BCDADJ register (correction value), and the correction result is stored in the A register and CY flag.

Caution The value read from the BCDADJ register varies depending on the value of the A register when it is read and those of the CY and AC flags. Therefore, execute the instruction <3> after the instruction <2> instead of executing any other instructions. To perform BCD correction in the interrupt enabled state, saving and restoring the A register is required within the interrupt function. PSW (CY flag and AC flag) is restored by the RETI instruction.

An example is shown below.

Examples 1: 99 + 89 = 188

Instruction	A Register	CY Flag	AC Flag	BCDADJ Register
`MOV A, #99H ; <1>`	99H	–	–	–
`ADD A, #89H ; <2>`	22H	1	1	66H
`ADD A, !BCDADJ ; <3>`	88H	1	0	–

Examples 2: 85 + 15 = 100

Instruction	A Register	CY Flag	AC Flag	BCDADJ Register
`MOV A, #85H ; <1>`	85H	–	–	–
`ADD A, #15H ; <2>`	9AH	0	0	66H
`ADD A, !BCDADJ ; <3>`	00H	1	1	–

Examples 3: 80 + 80 = 160

Instruction	A Register	CY Flag	AC Flag	BCDADJ Register
`MOV A, #80H ; <1>`	80H	–	–	–
`ADD A, #80H ; <2>`	00H	1	0	60H
`ADD A, !BCDADJ ; <3>`	60H	1	0	–

(2) Subtraction: Calculating the result of subtracting a BCD code value from another BCD code value by using a BCD code value

<1> The BCD code value from which subtraction is performed is stored in the A register.

<2> By subtracting the value of the second operand (value of BCD code to be subtracted) from the A register as is in binary, the calculation result in binary is stored in the A register, and the correction value is stored in the BCD correction result register (BCDADJ).

<3> Decimal correction is performed by subtracting the value of the BCDADJ register (correction value) from the A register (subtraction result in binary) in binary, and the correction result is stored in the A register and CY flag.

Caution The value read from the BCDADJ register varies depending on the value of the A register when it is read and those of the CY and AC flags. Therefore, execute the instruction <3> after the instruction <2> instead of executing any other instructions. To perform BCD correction in the interrupt enabled state, saving and restoring the A register is required within the interrupt function. PSW (CY flag and AC flag) is restored by the RETI instruction.

An example is shown below.

Example: 91 – 52 = 39

Instruction	A Register	CY Flag	AC Flag	BCDADJ Register
`MOV A, #91H ; <1>`	91H	–	–	–
`SUB A, #52H ; <2>`	3FH	0	1	06H
`SUB A, !BCDADJ ; <3>`	39H	0	0	–

CHAPTER 31 INSTRUCTION SET

This chapter lists the instructions in the RL78 microcontroller instruction set. For details of each operation and operation code, refer to the separate document **RL78 family User's Manual: software (R01US0015).**

31.1 Conventions Used in Operation List

31.1.1 Operand identifiers and specification methods

Operands are described in the “Operand” column of each instruction in accordance with the description method of the instruction operand identifier (refer to the assembler specifications for details). When there are two or more description methods, select one of them. Alphabetic letters in capitals and the symbols, #, !, !!, $, $!, [ ], and ES: are keywords and are described as they are. Each symbol has the following meaning.

- #: Immediate data specification
- !: 16-bit absolute address specification
- !!: 20-bit absolute address specification
- $: 8-bit relative address specification
- $!: 16-bit relative address specification
- [ ]: Indirect address specification
- ES:: Extension address specification

In the case of immediate data, describe an appropriate numeric value or a label. When using a label, be sure to describe the #, !, !!, $, $!, [ ], and ES: symbols.

For operand register identifiers, r and rp, either function names (X, A, C, etc.) or absolute names (names in parentheses in the table below, R0, R1, R2, etc.) can be used for description.

Table 31-1. Operand Identifiers and Specification Methods

Identifier	Description Method
r rp sfr sfrp	X (R0), A (R1), C (R2), B (R3), E (R4), D (R5), L (R6), H (R7) AX (RP0), BC (RP1), DE (RP2), HL (RP3) Special-function register symbol (SFR symbol) FFF00H to FFFFFH Special-function register symbols (16-bit manipulatable SFR symbol. Even addresses only[Note]) FFF00H to FFFFFH
saddr saddrp	FFE20H to FFF1FH Immediate data or labels FFE20H to FF1FH Immediate data or labels (even addresses only[Note])
addr20 addr16 addr5	00000H to FFFFFH Immediate data or labels 0000H to FFFFH Immediate data or labels (only even addresses for 16-bit data transfer instructions[Note]) 0080H to 00BFH Immediate data or labels (even addresses only)
word byte bit	16-bit immediate data or label 8-bit immediate data or label 3-bit immediate data or label
RBn	RB0 to RB3

Note Bit 0 = 0 when an odd address is specified.

Remark The special function registers can be described to operand sfr as symbols. See **Table 3-5 SFR List** for the symbols of the special function registers. The extended special function registers can be described to operand !addr16 as symbols. See **Table 3-6 Extended SFR (2nd SFR) List** for the symbols of the extended special function registers.

31.1.2 Description of operation column

The operation when the instruction is executed is shown in the “Operation” column using the following symbols.

Table 31-2. Symbols in “Operation” Column

Symbol	Function
A	A register; 8-bit accumulator
X	X register
B	B register
C	C register
D	D register
E	E register
H	H register
L	L register
ES	ES register
CS	CS register
AX	AX register pair; 16-bit accumulator
BC	BC register pair
DE	DE register pair
HL	HL register pair
PC	Program counter
SP	Stack pointer
PSW	Program status word
CY	Carry flag
AC	Auxiliary carry flag
Z	Zero flag
RBS	Register bank select flag
IE	Interrupt request enable flag
()	Memory contents indicated by address or register contents in parentheses
X_H, X_L X_S, X_H, X_L	16-bit registers: X_H = higher 8 bits, X_L = lower 8 bits 20-bit registers: X_S = (bits 19 to 16), X_H = (bits 15 to 8), X_L = (bits 7 to 0)
∧	Logical product (AND)
∨	Logical sum (OR)
∨̸	Exclusive logical sum (exclusive OR)
¯	Inverted data
addr5	16-bit immediate data (even addresses only in 0080H to 00BFH)
addr16	16-bit immediate data
addr20	20-bit immediate data
jdisp8	Signed 8-bit data (displacement value)
jdisp16	Signed 16-bit data (displacement value)

31.1.3 Description of flag operation column

The change of the flag value when the instruction is executed is shown in the “Flag” column using the following symbols.

Table 31-3. Symbols in “Flag” Column

Symbol	Change of Flag Value
(Blank)	Unchanged
0	Cleared to 0
1	Set to 1
×	Set/cleared according to the result
R	Previously saved value is restored

31.1.4 PREFIX instruction

Instructions with “ES:” have a PREFIX operation code as a prefix to extend the accessible data area to the 1 MB space (00000H to FFFFFH), by adding the ES register value to the 64 KB space from F0000H to FFFFFH. When a PREFIX operation code is attached as a prefix to the target instruction, only one instruction immediately after the PREFIX operation code is executed as the addresses with the ES register value added.

A interrupt and DMA transfer are not acknowledged between a PREFIX instruction code and the instruction immediately after.

Table 31-4. Use Example of PREFIX Operation Code

Instruction	Opcode				
	1	2	3	4	5
MOV !addr16, #byte	CFH	!addr16		#byte	–
MOV ES:!addr16, #byte	11H	CFH	!addr16		#byte
MOV A, [HL]	8BH	–	–	–	–
MOV A, ES:[HL]	11H	8BH	–	–	–

Caution Set the ES register value with MOV ES, A, etc., before executing the PREFIX instruction.

31.2 Operation List

Table 31-5. Operation List (1/17)

Instruction Group	Mnemonic	Operands	Bytes	Clocks		Operation	Flag		
				Note 1	**Note 2**		Z	AC	CY
8-bit data transfer	MOV	r, #byte	2	1	–	r ← byte			
		PSW, #byte	3	3	–	PSW ← byte	×	×	×
		CS, #byte	3	1	–	CS ← byte			
		ES, #byte	2	1	–	ES ← byte			
		!addr16, #byte	4	1	–	(addr16) ← byte			
		ES:!addr16, #byte	5	2	–	(ES, addr16) ← byte			
		saddr, #byte	3	1	–	(saddr) ← byte			
		sfr, #byte	3	1	–	sfr ← byte			
		[DE+byte], #byte	3	1	–	(DE+byte) ← byte			
		ES:[DE+byte],#byte	4	2	–	((ES, DE)+byte) ← byte			
		[HL+byte], #byte	3	1	–	(HL+byte) ← byte			
		ES:[HL+byte],#byte	4	2	–	((ES, HL)+byte) ← byte			
		[SP+byte], #byte	3	1	–	(SP+byte) ← byte			
		word[B], #byte	4	1	–	(B+word) ← byte			
		ES:word[B], #byte	5	2	–	((ES, B)+word) ← byte			
		word[C], #byte	4	1	–	(C+word) ← byte			
		ES:word[C], #byte	5	2	–	((ES, C)+word) ← byte			
		word[BC], #byte	4	1	–	(BC+word) ← byte			
		ES:word[BC], #byte	5	2	–	((ES, BC)+word) ← byte			
		A, r Note 3	1	1	–	A ← r			
		r, A Note 3	1	1	–	r ← A			
		A, PSW	2	1	–	A ← PSW			
		PSW, A	2	3	–	PSW ← A	×	×	×
		A, CS	2	1	–	A ← CS			
		CS, A	2	1	–	CS ← A			
		A, ES	2	1	–	A ← ES			
		ES, A	2	1	–	ES ← A			
		A, !addr16	3	1	4	A ← (addr16)			
		A, ES:!addr16	4	2	5	A ← (ES, addr16)			
		!addr16, A	3	1	–	(addr16) ← A			
		ES:!addr16, A	4	2	–	(ES, addr16) ← A			
		A, saddr	2	1	–	A ← (saddr)			
		saddr, A	2	1	–	(saddr) ← A			

Notes 1. Number of CPU clocks (f_{CLK}) when the internal RAM area, SFR area, or extended SFR area is accessed, or when no data is accessed.

2. Number of CPU clocks (f_{CLK}) when the code flash area is accessed, or when the data flash area is accessed by an 8-bit instruction.

3. Except r = A

Remark Number of clock is when program exists in the internal ROM (flash memory) area. If fetching the instruction from the internal RAM area, the number becomes double number plus 3 clocks at a maximum.

Table 31-5. Operation List (2/17)

Instruction Group	Mnemonic	Operands	Bytes	Clocks		Operation	Flag
				Note 1	**Note 2**		Z AC CY
8-bit data transfer	MOV	A, sfr	2	1	–	A ← sfr	
		sfr, A	2	1	–	sfr ← A	
		A, [DE]	1	1	4	A ← (DE)	
		[DE], A	1	1	–	(DE) ← A	
		A, ES:[DE]	2	2	5	A ← (ES, DE)	
		ES:[DE], A	2	2	–	(ES, DE) ← A	
		A, [HL]	1	1	4	A ← (HL)	
		[HL], A	1	1	–	(HL) ← A	
		A, ES:[HL]	2	2	5	A ← (ES, HL)	
		ES:[HL], A	2	2	–	(ES, HL) ← A	
		A, [DE+byte]	2	1	4	A ← (DE + byte)	
		[DE+byte], A	2	1	–	(DE + byte) ← A	
		A, ES:[DE+byte]	3	2	5	A ← ((ES, DE) + byte)	
		ES:[DE+byte], A	3	2	–	((ES, DE) + byte) ← A	
		A, [HL+byte]	2	1	4	A ← (HL + byte)	
		[HL+byte], A	2	1	–	(HL + byte) ← A	
		A, ES:[HL+byte]	3	2	5	A ← ((ES, HL) + byte)	
		ES:[HL+byte], A	3	2	–	((ES, HL) + byte) ← A	
		A, [SP+byte]	2	1	–	A ← (SP + byte)	
		[SP+byte], A	2	1	–	(SP + byte) ← A	
		A, word[B]	3	1	4	A ← (B + word)	
		word[B], A	3	1	–	(B + word) ← A	
		A, ES:word[B]	4	2	5	A ← ((ES, B) + word)	
		ES:word[B], A	4	2	–	((ES, B) + word) ← A	
		A, word[C]	3	1	4	A ← (C + word)	
		word[C], A	3	1	–	(C + word) ← A	
		A, ES:word[C]	4	2	5	A ← ((ES, C) + word)	
		ES:word[C], A	4	2	–	((ES, C) + word) ← A	
		A, word[BC]	3	1	4	A ← (BC + word)	
		word[BC], A	3	1	–	(BC + word) ← A	
		A, ES:word[BC]	4	2	5	A ← ((ES, BC) + word)	
		ES:word[BC], A	4	2	–	((ES, BC) + word) ← A	

Notes 1. Number of CPU clocks (f_{CLK}) when the internal RAM area, SFR area, or extended SFR area is accessed, or when no data is accessed.

2. Number of CPU clocks (f_{CLK}) when the code flash area is accessed, or when the data flash area is accessed by an 8-bit instruction.

Remark Number of clock is when program exists in the internal ROM (flash memory) area. If fetching the instruction from the internal RAM area, the number becomes double number plus 3 clocks at a maximum.

Table 31-5. Operation List (3/17)

Instruction Group	Mnemonic	Operands	Bytes	Clocks		Operation	Flag
				Note 1	**Note 2**		Z AC CY
8-bit data transfer	MOV	A, [HL+B]	2	1	4	A ← (HL + B)	
		[HL+B], A	2	1	–	(HL + B) ← A	
		A, ES:[HL+B]	3	2	5	A ← ((ES, HL) + B)	
		ES:[HL+B], A	3	2	–	((ES, HL) + B) ← A	
		A, [HL+C]	2	1	4	A ← (HL + C)	
		[HL+C], A	2	1	–	(HL + C) ← A	
		A, ES:[HL+C]	3	2	5	A ← ((ES, HL) + C)	
		ES:[HL+C], A	3	2	–	((ES, HL) + C) ← A	
		X, !addr16	3	1	4	X ← (addr16)	
		X, ES:!addr16	4	2	5	X ← (ES, addr16)	
		X, saddr	2	1	–	X ← (saddr)	
		B, !addr16	3	1	4	B ← (addr16)	
		B, ES:!addr16	4	2	5	B ← (ES, addr16)	
		B, saddr	2	1	–	B ← (saddr)	
		C, !addr16	3	1	4	C ← (addr16)	
		C, ES:!addr16	4	2	5	C ← (ES, addr16)	
		C, saddr	2	1	–	C ← (saddr)	
		ES, saddr	3	1	–	ES ← (saddr)	
	XCH	A, r Note 3	1 (r = X) 2 (other than r = X)	1	–	A ←→ r	
		A, !addr16	4	2	–	A ←→ (addr16)	
		A, ES:!addr16	5	3	–	A ←→ (ES, addr16)	
		A, saddr	3	2	–	A ←→ (saddr)	
		A, sfr	3	2	–	A ←→ sfr	
		A, [DE]	2	2	–	A ←→ (DE)	
		A, ES:[DE]	3	3	–	A ←→ (ES, DE)	
		A, [HL]	2	2	–	A ←→ (HL)	
		A, ES:[HL]	3	3	–	A ←→ (ES, HL)	
		A, [DE+byte]	3	2	–	A ←→ (DE + byte)	
		A, ES:[DE+byte]	4	3	–	A ←→ ((ES, DE) + byte)	
		A, [HL+byte]	3	2	–	A ←→ (HL + byte)	
		A, ES:[HL+byte]	4	3	–	A ←→ ((ES, HL) + byte)	

Notes 1. Number of CPU clocks (f_{CLK}) when the internal RAM area, SFR area, or extended SFR area is accessed, or when no data is accessed.

2. Number of CPU clocks (f_{CLK}) when the code flash area is accessed, or when the data flash area is accessed by an 8-bit instruction.

3. Except r = A

Remark Number of clock is when program exists in the internal ROM (flash memory) area. If fetching the instruction from the internal RAM area, the number becomes double number plus 3 clocks at a maximum.

Table 31-5. Operation List (4/17)

Instruction Group	Mnemonic	Operands	Bytes	Clocks		Operation	Flag
				Note 1	**Note 2**		Z AC CY
8-bit data transfer	XCH	A, [HL+B]	2	2	–	A ←→ (HL+B)	
		A, ES:[HL+B]	3	3	–	A ←→ ((ES, HL)+B)	
		A, [HL+C]	2	2	–	A ←→ (HL+C)	
		A, ES:[HL+C]	3	3	–	A ←→ ((ES, HL)+C)	
	ONEB	A	1	1	–	A ← 01H	
		X	1	1	–	X ← 01H	
		B	1	1	–	B ← 01H	
		C	1	1	–	C ← 01H	
		!addr16	3	1	–	(addr16) ← 01H	
		ES:!addr16	4	2	–	(ES, addr16) ← 01H	
		saddr	2	1	–	(saddr) ← 01H	
	CLRB	A	1	1	–	A ← 00H	
		X	1	1	–	X ← 00H	
		B	1	1	–	B ← 00H	
		C	1	1	–	C ← 00H	
		!addr16	3	1	–	(addr16) ← 00H	
		ES:!addr16	4	2	–	(ES,addr16) ← 00H	
		saddr	2	1	–	(saddr) ← 00H	
	MOVS	[HL+byte], X	3	1	–	(HL+byte) ← X	× ×
		ES:[HL+byte], X	4	2	–	(ES, HL+byte) ← X	× ×
16-bit data transfer	MOVW	rp, #word	3	1	–	rp ← word	
		saddrp, #word	4	1	–	(saddrp) ← word	
		sfrp, #word	4	1	–	sfrp ← word	
		AX, rp Note 3	1	1	–	AX ← rp	
		rp, AX Note 3	1	1	–	rp ← AX	
		AX, !addr16	3	1	4	AX ← (addr16)	
		!addr16, AX	3	1	–	(addr16) ← AX	
		AX, ES:!addr16	4	2	5	AX ← (ES, addr16)	
		ES:!addr16, AX	4	2	–	(ES, addr16) ← AX	
		AX, saddrp	2	1	–	AX ← (saddrp)	
		saddrp, AX	2	1	–	(saddrp) ← AX	
		AX, sfrp	2	1	–	AX ← sfrp	
		sfrp, AX	2	1	–	sfrp ← AX	

Notes 1. Number of CPU clocks (f_{CLK}) when the internal RAM area, SFR area, or extended SFR area is accessed, or when no data is accessed.

2. Number of CPU clocks (f_{CLK}) when the code flash area is accessed, or when the data flash area is accessed by an 8-bit instruction.

3. Except rp = AX

Remark Number of clock is when program exists in the internal ROM (flash memory) area. If fetching the instruction from the internal RAM area, the number becomes double number plus 3 clocks at a maximum.

Table 31-5. Operation List (5/17)

Instruction Group	Mnemonic	Operands	Bytes	Clocks		Operation	Flag
				Note 1	**Note 2**		Z AC CY
16-bit data transfer	MOVW	AX, [DE]	1	1	4	AX ← (DE)	
		[DE], AX	1	1	–	(DE) ← AX	
		AX, ES:[DE]	2	2	5	AX ← (ES, DE)	
		ES:[DE], AX	2	2	–	(ES, DE) ← AX	
		AX, [HL]	1	1	4	AX ← (HL)	
		[HL], AX	1	1	–	(HL) ← AX	
		AX, ES:[HL]	2	2	5	AX ← (ES, HL)	
		ES:[HL], AX	2	2	–	(ES, HL) ← AX	
		AX, [DE+byte]	2	1	4	AX ← (DE+byte)	
		[DE+byte], AX	2	1	–	(DE+byte) ← AX	
		AX, ES:[DE+byte]	3	2	5	AX ← ((ES, DE) + byte)	
		ES:[DE+byte], AX	3	2	–	((ES, DE) + byte) ← AX	
		AX, [HL+byte]	2	1	4	AX ← (HL + byte)	
		[HL+byte], AX	2	1	–	(HL + byte) ← AX	
		AX, ES:[HL+byte]	3	2	5	AX ← ((ES, HL) + byte)	
		ES:[HL+byte], AX	3	2	–	((ES, HL) + byte) ← AX	
		AX, [SP+byte]	2	1	–	AX ← (SP + byte)	
		[SP+byte], AX	2	1	–	(SP + byte) ← AX	
		AX, word[B]	3	1	4	AX ← (B + word)	
		word[B], AX	3	1	–	(B+ word) ← AX	
		AX, ES:word[B]	4	2	5	AX ← ((ES, B) + word)	
		ES:word[B], AX	4	2	–	((ES, B) + word) ← AX	
		AX, word[C]	3	1	4	AX ← (C + word)	
		word[C], AX	3	1	–	(C + word) ← AX	
		AX, ES:word[C]	4	2	5	AX ← ((ES, C) + word)	
		ES:word[C], AX	4	2	–	((ES, C) + word) ← AX	
		AX, word[BC]	3	1	4	AX ← (BC + word)	
		word[BC], AX	3	1	–	(BC + word) ← AX	
		AX, ES:word[BC]	4	2	5	AX ← ((ES, BC) + word)	
		ES:word[BC], AX	4	2	–	((ES, BC) + word) ← AX	

Notes 1. Number of CPU clocks (f_{CLK}) when the internal RAM area, SFR area, or extended SFR area is accessed, or when no data is accessed.

2. Number of CPU clocks (f_{CLK}) when the code flash area is accessed, or when the data flash area is accessed by an 8-bit instruction.

Remark Number of clock is when program exists in the internal ROM (flash memory) area. If fetching the instruction from the internal RAM area, the number becomes double number plus 3 clocks at a maximum.

Table 31-5. Operation List (6/17)

Instruction Group	Mnemonic	Operands	Bytes	Clocks		Operation	Flag		
				Note 1	**Note 2**		Z	AC	CY
16-bit data transfer	MOVW	BC, !addr16	3	1	4	BC ← (addr16)			
		BC, ES:!addr16	4	2	5	BC ← (ES, addr16)			
		DE, !addr16	3	1	4	DE ← (addr16)			
		DE, ES:!addr16	4	2	5	DE ← (ES, addr16)			
		HL, !addr16	3	1	4	HL ← (addr16)			
		HL, ES:!addr16	4	2	5	HL ← (ES, addr16)			
		BC, saddrp	2	1	–	BC ← (saddrp)			
		DE, saddrp	2	1	–	DE ← (saddrp)			
		HL, saddrp	2	1	–	HL ← (saddrp)			
	XCHW	AX, rp Note 3	1	1	–	AX ←→ rp			
	ONEW	AX	1	1	–	AX ← 0001H			
		BC	1	1	–	BC ← 0001H			
	CLRW	AX	1	1	–	AX ← 0000H			
		BC	1	1	–	BC ← 0000H			
8-bit operation	ADD	A, #byte	2	1	–	A, CY ← A + byte	×	×	×
		saddr, #byte	3	2	–	(saddr), CY ← (saddr)+byte	×	×	×
		A, r Note 4	2	1	–	A, CY ← A + r	×	×	×
		r, A	2	1	–	r, CY ← r + A	×	×	×
		A, !addr16	3	1	4	A, CY ← A + (addr16)	×	×	×
		A, ES:!addr16	4	2	5	A, CY ← A + (ES, addr16)	×	×	×
		A, saddr	2	1	–	A, CY ← A + (saddr)	×	×	×
		A, [HL]	1	1	4	A, CY ← A+ (HL)	×	×	×
		A, ES:[HL]	2	2	5	A,CY ← A + (ES, HL)	×	×	×
		A, [HL+byte]	2	1	4	A, CY ← A + (HL+byte)	×	×	×
		A, ES:[HL+byte]	3	2	5	A,CY ← A + ((ES, HL)+byte)	×	×	×
		A, [HL+B]	2	1	4	A, CY ← A + (HL+B)	×	×	×
		A, ES:[HL+B]	3	2	5	A,CY ← A+((ES, HL)+B)	×	×	×
		A, [HL+C]	2	1	4	A, CY ← A + (HL+C)	×	×	×
		A, ES:[HL+C]	3	2	5	A,CY ← A + ((ES, HL) + C)	×	×	×

Notes 1. Number of CPU clocks (f_{CLK}) when the internal RAM area, SFR area, or extended SFR area is accessed, or when no data is accessed.

2. Number of CPU clocks (f_{CLK}) when the code flash area is accessed, or when the data flash area is accessed by an 8-bit instruction.

3. Except rp = AX

4. Except r = A

Remark Number of clock is when program exists in the internal ROM (flash memory) area. If fetching the instruction from the internal RAM area, the number becomes double number plus 3 clocks at a maximum.

Table 31-5. Operation List (7/17)

Instruction Group	Mnemonic	Operands	Bytes	Clocks		Operation	Flag		
				Note 1	**Note 2**		Z	AC	CY
8-bit operation	ADDC	A, #byte	2	1	–	A, CY ← A+byte+CY	×	×	×
		saddr, #byte	3	2	–	(saddr), CY ← (saddr) +byte+CY	×	×	×
		A, r Note 3	2	1	–	A, CY ← A + r + CY	×	×	×
		r, A	2	1	–	r, CY ← r + A + CY	×	×	×
		A, !addr16	3	1	4	A, CY ← A + (addr16)+CY	×	×	×
		A, ES:!addr16	4	2	5	A, CY ← A + (ES, addr16)+CY	×	×	×
		A, saddr	2	1	–	A, CY ← A + (saddr)+CY	×	×	×
		A, [HL]	1	1	4	A, CY ← A+ (HL) + CY	×	×	×
		A, ES:[HL]	2	2	5	A,CY ← A+ (ES, HL) + CY	×	×	×
		A, [HL+byte]	2	1	4	A, CY ← A+ (HL+byte) + CY	×	×	×
		A, ES:[HL+byte]	3	2	5	A,CY ← A+ ((ES, HL)+byte) + CY	×	×	×
		A, [HL+B]	2	1	4	A, CY ← A+ (HL+B) +CY	×	×	×
		A, ES:[HL+B]	3	2	5	A,CY ← A+((ES, HL)+B)+CY	×	×	×
		A, [HL+C]	2	1	4	A, CY ← A+ (HL+C)+CY	×	×	×
		A, ES:[HL+C]	3	2	5	A,CY ← A+ ((ES, HL)+C)+CY	×	×	×
	SUB	A, #byte	2	1	–	A, CY ← A – byte	×	×	×
		saddr, #byte	3	2	–	(saddr), CY ← (saddr) – byte	×	×	×
		A, r Note 3	2	1	–	A, CY ← A – r	×	×	×
		r, A	2	1	–	r, CY ← r – A	×	×	×
		A, !addr16	3	1	4	A, CY ← A – (addr16)	×	×	×
		A, ES:!addr16	4	2	5	A, CY ← A – (ES, addr16)	×	×	×
		A, saddr	2	1	–	A, CY ← A – (saddr)	×	×	×
		A, [HL]	1	1	4	A, CY ← A – (HL)	×	×	×
		A, ES:[HL]	2	2	5	A,CY ← A – (ES, HL)	×	×	×
		A, [HL+byte]	2	1	4	A, CY ← A – (HL+byte)	×	×	×
		A, ES:[HL+byte]	3	2	5	A,CY ← A – ((ES, HL)+byte)	×	×	×
		A, [HL+B]	2	1	4	A, CY ← A – (HL+B)	×	×	×
		A, ES:[HL+B]	3	2	5	A,CY ← A – ((ES, HL)+B)	×	×	×
		A, [HL+C]	2	1	4	A, CY ← A – (HL+C)	×	×	×
		A, ES:[HL+C]	3	2	5	A,CY ← A – ((ES, HL)+C)	×	×	×

Notes 1. Number of CPU clocks (f_{CLK}) when the internal RAM area, SFR area, or extended SFR area is accessed, or when no data is accessed.

2. Number of CPU clocks (f_{CLK}) when the code flash area is accessed, or when the data flash area is accessed by an 8-bit instruction.

3. Except r = A

Remark Number of clock is when program exists in the internal ROM (flash memory) area. If fetching the instruction from the internal RAM area, the number becomes double number plus 3 clocks at a maximum.

Table 31-5. Operation List (8/17)

Instruction Group	Mnemonic	Operands	Bytes	Clocks		Operation	Flag		
				Note 1	**Note 2**		Z	AC	CY
8-bit operation	SUBC	A, #byte	2	1	–	A, CY ← A – byte – CY	×	×	×
		saddr, #byte	3	2	–	(saddr), CY ← (saddr) – byte – CY	×	×	×
		A, r Note 3	2	1	–	A, CY ← A – r – CY	×	×	×
		r, A	2	1	–	r, CY ← r – A – CY	×	×	×
		A, !addr16	3	1	4	A, CY ← A – (addr16) – CY	×	×	×
		A, ES:!addr16	4	2	5	A, CY ← A – (ES, addr16) – CY	×	×	×
		A, saddr	2	1	–	A, CY ← A – (saddr) – CY	×	×	×
		A, [HL]	1	1	4	A, CY ← A – (HL) – CY	×	×	×
		A, ES:[HL]	2	2	5	A,CY ← A – (ES, HL) – CY	×	×	×
		A, [HL+byte]	2	1	4	A, CY ← A – (HL+byte) – CY	×	×	×
		A, ES:[HL+byte]	3	2	5	A,CY ← A – ((ES, HL)+byte) – CY	×	×	×
		A, [HL+B]	2	1	4	A, CY ← A – (HL+B) – CY	×	×	×
		A, ES:[HL+B]	3	2	5	A,CY ← A – ((ES, HL)+B) – CY	×	×	×
		A, [HL+C]	2	1	4	A, CY ← A – (HL+C) – CY	×	×	×
		A, ES:[HL+C]	3	2	5	A, CY ← A – ((ES:HL)+C) – CY	×	×	×
	AND	A, #byte	2	1	–	A ← A ∧ byte	×		
		saddr, #byte	3	2	–	(saddr) ← (saddr) ∧ byte	×		
		A, r Note 3	2	1	–	A ← A ∧ r	×		
		r, A	2	1	–	r ← r ∧ A	×		
		A, !addr16	3	1	4	A ← A ∧ (addr16)	×		
		A, ES:!addr16	4	2	5	A ← A ∧ (ES:addr16)	×		
		A, saddr	2	1	–	A ← A ∧ (saddr)	×		
		A, [HL]	1	1	4	A ← A ∧ (HL)	×		
		A, ES:[HL]	2	2	5	A ← A ∧ (ES:HL)	×		
		A, [HL+byte]	2	1	4	A ← A ∧ (HL+byte)	×		
		A, ES:[HL+byte]	3	2	5	A ← A ∧ ((ES:HL)+byte)	×		
		A, [HL+B]	2	1	4	A ← A ∧ (HL+B)	×		
		A, ES:[HL+B]	3	2	5	A ← A ∧ ((ES:HL)+B)	×		
		A, [HL+C]	2	1	4	A ← A ∧ (HL+C)	×		
		A, ES:[HL+C]	3	2	5	A ← A ∧ ((ES:HL)+C)	×		

Notes 1. Number of CPU clocks (f_{CLK}) when the internal RAM area, SFR area, or extended SFR area is accessed, or when no data is accessed.

2. Number of CPU clocks (f_{CLK}) when the code flash area is accessed, or when the data flash area is accessed by an 8-bit instruction.

3. Except r = A

Remark Number of clock is when program exists in the internal ROM (flash memory) area. If fetching the instruction from the internal RAM area, the number becomes double number plus 3 clocks at a maximum.

Table 31-5. Operation List (9/17)

Instruction Group	Mnemonic	Operands	Bytes	Clocks		Operation	Flag
				Note 1	**Note 2**		Z AC CY
8-bit operation	OR	A, #byte	2	1	–	A ← A∨ byte	×
		saddr, #byte	3	2	–	(saddr) ← (saddr)∨ byte	×
		A, r Note 3	2	1	–	A ← A∨ r	×
		r, A	2	1	–	r ← r∨ A	×
		A, !addr16	3	1	4	A ← A∨ (addr16)	×
		A, ES:!addr16	4	2	5	A ← A∨ (ES:addr16)	×
		A, saddr	2	1	–	A ← A∨ (saddr)	×
		A, [HL]	1	1	4	A ← A∨ (H)	×
		A, ES:[HL]	2	2	5	A ← A∨ (ES:HL)	×
		A, [HL+byte]	2	1	4	A ← A∨ (HL+byte)	×
		A, ES:[HL+byte]	3	2	5	A ← A∨ ((ES:HL)+byte)	×
		A, [HL+B]	2	1	4	A ← A∨ (HL+B)	×
		A, ES:[HL+B]	3	2	5	A ← A∨ ((ES:HL)+B)	×
		A, [HL+C]	2	1	4	A ← A∨ (HL+C)	×
		A, ES:[HL+C]	3	2	5	A ← A∨ ((ES:HL)+C)	×
	XOR	A, #byte	2	1	–	A ← A∨byte	×
		saddr, #byte	3	2	–	(saddr) ← (saddr)∨byte	×
		A, r Note 3	2	1	–	A ← A∨r	×
		r, A	2	1	–	r ← r∨A	×
		A, !addr16	3	1	4	A ← A∨(addr16)	×
		A, ES:!addr16	4	2	5	A ← A∨(ES:addr16)	×
		A, saddr	2	1	–	A ← A∨(saddr)	×
		A, [HL]	1	1	4	A ← A∨(HL)	×
		A, ES:[HL]	2	2	5	A ← A∨(ES:HL)	×
		A, [HL+byte]	2	1	4	A ← A∨(HL+byte)	×
		A, ES:[HL+byte]	3	2	5	A ← A∨((ES:HL)+byte)	×
		A, [HL+B]	2	1	4	A ← A∨(HL+B)	×
		A, ES:[HL+B]	3	2	5	A ← A∨((ES:HL)+B)	×
		A, [HL+C]	2	1	4	A ← A∨(HL+C)	×
		A, ES:[HL+C]	3	2	5	A ← A∨((ES:HL)+C)	×

Notes 1. Number of CPU clocks (f_{CLK}) when the internal RAM area, SFR area, or extended SFR area is accessed, or when no data is accessed.

2. Number of CPU clocks (f_{CLK}) when the code flash area is accessed, or when the data flash area is accessed by an 8-bit instruction.

3. Except r = A

Remark Number of clock is when program exists in the internal ROM (flash memory) area. If fetching the instruction from the internal RAM area, the number becomes double number plus 3 clocks at a maximum.

Table 31-5. Operation List (10/17)

Instruction Group	Mnemonic	Operands	Bytes	Clocks		Operation	Flag		
				Note 1	Note 2		Z	AC	CY
8-bit operation	CMP	A, #byte	2	1	–	A – byte	×	×	×
		!addr16, #byte	4	1	4	(addr16) – byte	×	×	×
		ES:!addr16, #byte	5	2	5	(ES:addr16) – byte	×	×	×
		saddr, #byte	3	1	–	(saddr) – byte	×	×	×
		A, r Note3	2	1	–	A – r	×	×	×
		r, A	2	1	–	r – A	×	×	×
		A, !addr16	3	1	4	A – (addr16)	×	×	×
		A, ES:!addr16	4	2	5	A – (ES:addr16)	×	×	×
		A, saddr	2	1	–	A – (saddr)	×	×	×
		A, [HL]	1	1	4	A – (HL)	×	×	×
		A, ES:[HL]	2	2	5	A – (ES:HL)	×	×	×
		A, [HL+byte]	2	1	4	A – (HL+byte)	×	×	×
		A, ES:[HL+byte]	3	2	5	A – ((ES:HL)+byte)	×	×	×
		A, [HL+B]	2	1	4	A – (HL+B)	×	×	×
		A, ES:[HL+B]	3	2	5	A – ((ES:HL)+B)	×	×	×
		A, [HL+C]	2	1	4	A – (HL+C)	×	×	×
		A, ES:[HL+C]	3	2	5	A – ((ES:HL)+C)	×	×	×
	CMP0	A	1	1	–	A – 00H	×	0	0
		X	1	1	–	X – 00H	×	0	0
		B	1	1	–	B – 00H	×	0	0
		C	1	1	–	C – 00H	×	0	0
		!addr16	3	1	4	(addr16) – 00H	×	0	0
		ES:!addr16	4	2	5	(ES:addr16) – 00H	×	0	0
		saddr	2	1	–	(saddr) – 00H	×	0	0
	CMPS	X, [HL+byte]	3	1	4	X – (HL+byte)	×	×	×
		X, ES:[HL+byte]	4	2	5	X – ((ES:HL)+byte)	×	×	×

Notes 1. Number of CPU clocks (f_{CLK}) when the internal RAM area, SFR area, or extended SFR area is accessed, or when no data is accessed.

2. Number of CPU clocks (f_{CLK}) when the code flash area is accessed, or when the data flash area is accessed by an 8-bit instruction.

3. Except r = A

Remark Number of clock is when program exists in the internal ROM (flash memory) area. If fetching the instruction from the internal RAM area, the number becomes double number plus 3 clocks at a maximum.

Table 31-5. Operation List (11/17)

Instruction Group	Mnemonic	Operands	Bytes	Clocks		Operation	Flag		
				Note 1	**Note 2**		Z	AC	CY
16-bit operation	ADDW	AX, #word	3	1	–	AX, CY ← AX+word	×	×	×
		AX, AX	1	1	–	AX, CY ← AX+AX	×	×	×
		AX, BC	1	1	–	AX, CY ← AX+BC	×	×	×
		AX, DE	1	1	–	AX, CY ← AX+DE	×	×	×
		AX, HL	1	1	–	AX, CY ← AX+HL	×	×	×
		AX, !addr16	3	1	4	AX, CY ← AX+(addr16)	×	×	×
		AX, ES:!addr16	4	2	5	AX, CY ← AX+(ES:addr16)	×	×	×
		AX, saddrp	2	1	–	AX, CY ← AX+(saddrp)	×	×	×
		AX, [HL+byte]	3	1	4	AX, CY ← AX+(HL+byte)	×	×	×
		AX, ES: [HL+byte]	4	2	5	AX, CY ← AX+((ES:HL)+byte)	×	×	×
	SUBW	AX, #word	3	1	–	AX, CY ← AX – word	×	×	×
		AX, BC	1	1	–	AX, CY ← AX – BC	×	×	×
		AX, DE	1	1	–	AX, CY ← AX – DE	×	×	×
		AX, HL	1	1	–	AX, CY ← AX – HL	×	×	×
		AX, !addr16	3	1	4	AX, CY ← AX – (addr16)	×	×	×
		AX, ES:!addr16	4	2	5	AX, CY ← AX – (ES:addr16)	×	×	×
		AX, saddrp	2	1	–	AX, CY ← AX – (saddrp)	×	×	×
		AX, [HL+byte]	3	1	4	AX, CY ← AX – (HL+byte)	×	×	×
		AX, ES: [HL+byte]	4	2	5	AX, CY ← AX – ((ES:HL)+byte)	×	×	×
	CMPW	AX, #word	3	1	–	AX – word	×	×	×
		AX, BC	1	1	–	AX – BC	×	×	×
		AX, DE	1	1	–	AX – DE	×	×	×
		AX, HL	1	1	–	AX – HL	×	×	×
		AX, !addr16	3	1	4	AX – (addr16)	×	×	×
		AX, ES:!addr16	4	2	5	AX – (ES:addr16)	×	×	×
		AX, saddrp	2	1	–	AX – (saddrp)	×	×	×
		AX, [HL+byte]	3	1	4	AX – (HL+byte)	×	×	×
		AX, ES: [HL+byte]	4	2	5	AX – ((ES:HL)+byte)	×	×	×
Multiply	MULU	X	1	1	–	AX ← A×X			

Notes 1. Number of CPU clocks (f_{CLK}) when the internal RAM area, SFR area, or extended SFR area is accessed, or when no data is accessed.

2. Number of CPU clocks (f_{CLK}) when the code flash area is accessed, or when the data flash area is accessed by an 8-bit instruction.

Remark Number of clock is when program exists in the internal ROM (flash memory) area. If fetching the instruction from the internal RAM area, the number becomes double number plus 3 clocks at a maximum.

Table 31-5. Operation List (12/17)

Instruction Group	Mnemonic	Operands	Bytes	Clocks		Operation	Flag		
				Note 1	**Note 2**		Z	AC	CY
Increment/ decrement	INC	r	1	1	–	r ← r+1	×	×	
		!addr16	3	2	–	(addr16) ← (addr16)+1	×	×	
		ES:!addr16	4	3	–	(ES, addr16) ← (ES, addr16)+1	×	×	
		saddr	2	2	–	(saddr) ← (saddr)+1	×	×	
		[HL+byte]	3	2	–	(HL+byte) ← (HL+byte)+1	×	×	
		ES: [HL+byte]	4	3	–	((ES:HL)+byte) ← ((ES:HL)+byte)+1	×	×	
	DEC	r	1	1	–	r ← r – 1	×	×	
		!addr16	3	2	–	(addr16) ← (addr16) – 1	×	×	
		ES:!addr16	4	3	–	(ES, addr16) ← (ES, addr16) – 1	×	×	
		saddr	2	2	–	(saddr) ← (saddr) – 1	×	×	
		[HL+byte]	3	2	–	(HL+byte) ← (HL+byte) – 1	×	×	
		ES: [HL+byte]	4	3	–	((ES:HL)+byte) ← ((ES:HL)+byte) – 1	×	×	
	INCW	rp	1	1	–	rp ← rp+1			
		!addr16	3	2	–	(addr16) ← (addr16)+1			
		ES:!addr16	4	3	–	(ES, addr16) ← (ES, addr16)+1			
		saddrp	2	2	–	(saddrp) ← (saddrp)+1			
		[HL+byte]	3	2	–	(HL+byte) ← (HL+byte)+1			
		ES: [HL+byte]	4	3	–	((ES:HL)+byte) ← ((ES:HL)+byte)+1			
	DECW	rp	1	1	–	rp ← rp – 1			
		!addr16	3	2	–	(addr16) ← (addr16) – 1			
		ES:!addr16	4	3	–	(ES, addr16) ← (ES, addr16) – 1			
		saddrp	2	2	–	(saddrp) ← (saddrp) – 1			
		[HL+byte]	3	2	–	(HL+byte) ← (HL+byte) – 1			
		ES: [HL+byte]	4	3	–	((ES:HL)+byte) ← ((ES:HL)+byte) – 1			
Shift	SHR	A, cnt	2	1	–	(CY ← A_0, A_{m-1} ← A_m, A_7 ← 0) ×cnt			×
	SHRW	AX, cnt	2	1	–	(CY ← AX_0, AX_{m-1} ← AX_m, AX_{15} ← 0) ×cnt			×
	SHL	A, cnt	2	1	–	(CY ← A_7, A_m ← A_{m-1}, A_0 ← 0) ×cnt			×
		B, cnt	2	1	–	(CY ← B_7, B_m ← B_{m-1}, B_0 ← 0) ×cnt			×
		C, cnt	2	1	–	(CY ← C_7, C_m ← C_{m-1}, C_0 ← 0) ×cnt			×
	SHLW	AX, cnt	2	1	–	(CY ← AX_{15}, AX_m ← AX_{m-1}, AX_0 ← 0) ×cnt			×
		BC, cnt	2	1	–	(CY ← BC_{15}, BC_m ← BC_{m-1}, BC_0 ← 0) ×cnt			×
	SAR	A, cnt	2	1	–	(CY ← A_0, A_{m-1} ← A_m, A_7 ← A_7) ×cnt			×
	SARW	AX, cnt	2	1	–	(CY ← AX_0, AX_{m-1} ← AX_m, AX_{15}← AX_{15}) ×cnt			×

Notes 1. Number of CPU clocks (f_{CLK}) when the internal RAM area, SFR area, or extended SFR area is accessed, or when no data is accessed.

2. Number of CPU clocks (f_{CLK}) when the code flash area is accessed, or when the data flash area is accessed by an 8-bit instruction.

Remarks 1. Number of clock is when program exists in the internal ROM (flash memory) area. If fetching the instruction from the internal RAM area, the number becomes double number plus 3 clocks at a maximum.

2. cnt indicates the bit shift count.

Table 31-5. Operation List (13/17)

Instruction Group	Mnemonic	Operands	Bytes	Clocks		Operation	Flag		
				Note 1	**Note 2**		Z	AC	CY
Rotate	ROR	A, 1	2	1	–	(CY, $A_7 \leftarrow A_0$, $A_{m-1} \leftarrow A_m$)×1			×
	ROL	A, 1	2	1	–	(CY, $A_0 \leftarrow A_7$, $A_{m+1} \leftarrow A_m$)×1			×
	RORC	A, 1	2	1	–	(CY ← A_0, $A_7 \leftarrow$ CY, $A_{m-1} \leftarrow A_m$)×1			×
	ROLC	A, 1	2	1	–	(CY ← A_7, $A_0 \leftarrow$ CY, $A_{m+1} \leftarrow A_m$)×1			×
	ROLWC	AX,1	2	1	–	(CY ← AX_{15}, $AX_0 \leftarrow$ CY, $AX_{m+1} \leftarrow AX_m$) ×1			×
		BC,1	2	1	–	(CY ← BC_{15}, $BC_0 \leftarrow$ CY, $BC_{m+1} \leftarrow BC_m$) ×1			×
Bit manipulate	MOV1	CY, A.bit	2	1	–	CY ← A.bit			×
		A.bit, CY	2	1	–	A.bit ← CY			
		CY, PSW.bit	3	1	–	CY ← PSW.bit			×
		PSW.bit, CY	3	4	–	PSW.bit ← CY	×	×	
		CY, saddr.bit	3	1	–	CY ← (saddr).bit			×
		saddr.bit, CY	3	2	–	(saddr).bit ← CY			
		CY, sfr.bit	3	1	–	CY ← sfr.bit			×
		sfr.bit, CY	3	2	–	sfr.bit ← CY			
		CY,[HL].bit	2	1	4	CY ← (HL).bit			×
		[HL].bit, CY	2	2	–	(HL).bit ← CY			
		CY, ES:[HL].bit	3	2	5	CY ← (ES, HL).bit			×
		ES:[HL].bit, CY	3	3	–	(ES, HL).bit ← CY			
	AND1	CY, A.bit	2	1	–	CY ← CY ∧ A.bit			×
		CY, PSW.bit	3	1	–	CY ← CY ∧ PSW.bit			×
		CY, saddr.bit	3	1	–	CY ← CY ∧ (saddr).bit			×
		CY, sfr.bit	3	1	–	CY ← CY ∧ sfr.bit			×
		CY,[HL].bit	2	1	4	CY ← CY ∧ (HL).bit			×
		CY, ES:[HL].bit	3	2	5	CY ← CY ∧ (ES, HL).bit			×
	OR1	CY, A.bit	2	1	–	CY ← CY ∨ A.bit			×
		CY, PSW.bit	3	1	–	CYX ← CY ∨ PSW.bit			×
		CY, saddr.bit	3	1	–	CY ← CY ∨ (saddr).bit			×
		CY, sfr.bit	3	1	–	CY ← CY ∨ sfr.bit			×
		CY, [HL].bit	2	1	4	CY ← CY ∨ (HL).bit			×
		CY, ES:[HL].bit	3	2	5	CY ← CY ∨ (ES, HL).bit			×

Notes 1. Number of CPU clocks (f_{CLK}) when the internal RAM area, SFR area, or extended SFR area is accessed, or when no data is accessed.

2. Number of CPU clocks (f_{CLK}) when the code flash area is accessed, or when the data flash area is accessed by an 8-bit instruction.

Remark Number of clock is when program exists in the internal ROM (flash memory) area. If fetching the instruction from the internal RAM area, the number becomes double number plus 3 clocks at a maximum.

Table 31-5. Operation List (14/17)

Instruction Group	Mnemonic	Operands	Bytes	Clocks		Operation	Flag		
				Note 1	**Note 2**		Z	AC	CY
Bit manipulate	XOR1	CY, A.bit	2	1	–	CY ← CY ⊻ A.bit			×
		CY, PSW.bit	3	1	–	CY ← CY ⊻ PSW.bit			×
		CY, saddr.bit	3	1	–	CY ← CY ⊻ (saddr).bit			×
		CY, sfr.bit	3	1	–	CY ← CY ⊻ sfr.bit			×
		CY, [HL].bit	2	1	4	CY ← CY ⊻ (HL).bit			×
		CY, ES:[HL].bit	3	2	5	CY ← CY ⊻ (ES, HL).bit			×
	SET1	A.bit	2	1	–	A.bit ← 1			
		PSW.bit	3	4	–	PSW.bit ← 1	×	×	×
		!addr16.bit	4	2	–	(addr16).bit ← 1			
		ES:!addr16.bit	5	3	–	(ES, addr16).bit ← 1			
		saddr.bit	3	2	–	(saddr).bit ← 1			
		sfr.bit	3	2	–	sfr.bit ← 1			
		[HL].bit	2	2	–	(HL).bit ← 1			
		ES:[HL].bit	3	3	–	(ES, HL).bit ← 1			
	CLR1	A.bit	2	1	–	A.bit ← 0			
		PSW.bit	3	4	–	PSW.bit ← 0	×	×	×
		!addr16.bit	4	2	–	(addr16).bit ← 0			
		ES:!addr16.bit	5	3	–	(ES, addr16).bit ← 0			
		saddr.bit	3	2	–	(saddr).bit ← 0			
		sfr.bit	3	2	–	sfr.bit ← 0			
		[HL].bit	2	2	–	(HL).bit ← 0			
		ES:[HL].bit	3	3	–	(ES, HL).bit ← 0			
	SET1	CY	2	1	–	CY ← 1			1
	CLR1	CY	2	1	–	CY ← 0			0
	NOT1	CY	2	1	–	CY ← $\overline{CY}$			×

Notes 1. Number of CPU clocks (f_{CLK}) when the internal RAM area, SFR area, or extended SFR area is accessed, or when no data is accessed

2. Number of CPU clocks (f_{CLK}) when the code flash area is accessed, or when the data flash area is accessed by an 8-bit instruction.

Remark Number of clock is when program exists in the internal ROM (flash memory) area. If fetching the instruction from the internal RAM area, the number becomes double number plus 3 clocks at a maximum.

Table 31-5. Operation List (15/17)

Instruction Group	Mnemonic	Operands	Bytes	Clocks		Operation	Flag
				Note 1	**Note 2**		Z AC CY
Call/ return	CALL	rp	2	3	–	(SP – 2) ← $(PC+2)_S$, (SP – 3) ← $(PC+2)_H$, (SP – 4) ← $(PC+2)_L$, PC ← CS, rp, SP ← SP – 4	
		$!addr20	3	3	–	(SP – 2) ← $(PC+3)_S$, (SP – 3) ← $(PC+3)_H$, (SP – 4) ← $(PC+3)_L$, PC ← PC+3+jdisp16, SP ← SP – 4	
		!addr16	3	3	–	(SP – 2) ← $(PC+3)_S$, (SP – 3) ← $(PC+3)_H$, (SP – 4) ← $(PC+3)_L$, PC ← 0000, addr16, SP ← SP – 4	
		!!addr20	4	3	–	(SP – 2) ← $(PC+4)_S$, (SP – 3) ← $(PC+4)_H$, (SP – 4) ← $(PC+4)_L$, PC ← addr20, SP ← SP – 4	
	CALLT	[addr5]	2	5	–	(SP – 2) ← $(PC+2)_S$, (SP – 3) ← $(PC+2)_H$, (SP – 4) ← $(PC+2)_L$, PC_S ← 0000, PC_H ← (0000, addr5+1), PC_L ← (0000, addr5), SP ← SP – 4	
	BRK	-	2	5	–	(SP – 1) ← PSW, (SP – 2) ← $(PC+2)_S$, (SP – 3) ← $(PC+2)_H$, (SP – 4) ← $(PC+2)_L$, PC_S ← 0000, PC_H ← (0007FH), PC_L ← (0007EH), SP ← SP – 4, IE ← 0	
	RET	-	1	6	–	PC_L ← (SP), PC_H ← (SP+1), PC_S ← (SP+2), SP ← SP+4	
	RETI	-	2	6	–	PC_L ← (SP), PC_H ← (SP+1), PC_S ← (SP+2), PSW← (SP+3), SP ← SP+4	R R R
	RETB	-	2	6	–	PC_L ← (SP), PC_H ← (SP+1), PC_S ← (SP+2), PSW ← (SP+3), SP ← SP+4	R R R

Notes 1. Number of CPU clocks (f_{CLK}) when the internal RAM area, SFR area, or extended SFR area is accessed, or when no data is accessed.

2. Number of CPU clocks (f_{CLK}) when the code flash area is accessed, or when the data flash area is accessed by an 8-bit instruction.

Remark Number of clock is when program exists in the internal ROM (flash memory) area. If fetching the instruction from the internal RAM area, the number becomes double number plus 3 clocks at a maximum.

Table 31-5. Operation List (16/17)

Instruction Group	Mnemonic	Operands	Bytes	Clocks		Operation	Flag
				Note 1	**Note 2**		Z AC CY
Stack manipulate	PUSH	PSW	2	1	–	(SP – 1) ← PSW, (SP – 2) ← 00H, SP ← SP–2	
		rp	1	1	–	(SP – 1) ← rp_H, (SP – 2) ← rp_L, SP ← SP – 2	
	POP	PSW	2	3	–	PSW ← (SP+1), SP ← SP + 2	R R R
		rp	1	1	–	rp_L ←(SP), rp_H ← (SP+1), SP ← SP + 2	
	MOVW	SP, #word	4	1	–	SP ← word	
		SP, AX	2	1	–	SP ← AX	
		AX, SP	2	1	–	AX ← SP	
		HL, SP	3	1	–	HL ← SP	
		BC, SP	3	1	–	BC ← SP	
		DE, SP	3	1	–	DE ← SP	
	ADDW	SP, #byte	2	1	–	SP ← SP + byte	
	SUBW	SP, #byte	2	1	–	SP ← SP – byte	
Un-conditional branch	BR	AX	2	3	–	PC ← CS, AX	
		$addr20	2	3	–	PC ← PC + 2 + jdisp8	
		$!addr20	3	3	–	PC ← PC + 3 + jdisp16	
		!addr16	3	3	–	PC ← 0000, addr16	
		!!addr20	4	3	–	PC ← addr20	
Conditional branch	BC	$addr20	2	2/4 Note3	–	PC ← PC + 2 + jdisp8 if CY = 1	
	BNC	$addr20	2	2/4 Note3	–	PC ← PC + 2 + jdisp8 if CY = 0	
	BZ	$addr20	2	2/4 Note3	–	PC ← PC + 2 + jdisp8 if Z = 1	
	BNZ	$addr20	2	2/4 Note3	–	PC ← PC + 2 + jdisp8 if Z = 0	
	BH	$addr20	3	2/4 Note3	–	PC ← PC + 3 + jdisp8 if (Z∨ CY)=0	
	BNH	$addr20	3	2/4 Note3	–	PC ← PC + 3 + jdisp8 if (Z∨ CY)=1	
	BT	saddr.bit, $addr20	4	3/5 Note3	–	PC ← PC + 4 + jdisp8 if (saddr).bit = 1	
		sfr.bit, $addr20	4	3/5 Note3	–	PC ← PC + 4 + jdisp8 if sfr.bit = 1	
		A.bit, $addr20	3	3/5 Note3	–	PC ← PC + 3 + jdisp8 if A.bit = 1	
		PSW.bit, $addr20	4	3/5 Note3	–	PC ← PC + 4 + jdisp8 if PSW.bit = 1	
		[HL].bit, $addr20	3	3/5 Note3	6/7	PC ← PC + 3 + jdisp8 if (HL).bit = 1	
		ES:[HL].bit, $addr20	4	4/6 Note3	7/8	PC ← PC + 4 + jdisp8 if (ES, HL).bit = 1	

Notes 1. Number of CPU clocks (f_{CLK}) when the internal RAM area, SFR area, or extended SFR area is accessed, or when no data is accessed.

2. Number of CPU clocks (f_{CLK}) when the code flash area is accessed, or when the data flash area is accessed by an 8-bit instruction.

3. This indicates the number of clocks “when condition is not met/when condition is met”.

Remark Number of clock is when program exists in the internal ROM (flash memory) area. If fetching the instruction from the internal RAM area, the number becomes double number plus 3 clocks at a maximum.

Table 31-5. Operation List (17/17)

Instruction Group	Mnemonic	Operands	Bytes	Clocks		Operation	Flag
				Note 1	**Note 2**		Z AC CY
Conditional branch	BF	saddr.bit, $addr20	4	3/5 Note3	–	PC ← PC + 4 + jdisp8 if (saddr).bit = 0	
		sfr.bit, $addr20	4	3/5 Note3	–	PC ← PC + 4 + jdisp8 if sfr.bit = 0	
		A.bit, $addr20	3	3/5 Note3	–	PC ← PC + 3 + jdisp8 if A.bit = 0	
		PSW.bit, $addr20	4	3/5 Note3	–	PC ← PC + 4 + jdisp8 if PSW.bit = 0	
		[HL].bit, $addr20	3	3/5 Note3	6/7	PC ← PC + 3 + jdisp8 if (HL).bit = 0	
		ES:[HL].bit, $addr20	4	4/6 Note3	7/8	PC ← PC + 4 + jdisp8 if (ES, HL).bit = 0	
	BTCLR	saddr.bit, $addr20	4	3/5 Note3	–	PC ← PC + 4 + jdisp8 if (saddr).bit = 1 then reset (saddr).bit	
		sfr.bit, $addr20	4	3/5 Note3	–	PC ← PC + 4 + jdisp8 if sfr.bit = 1 then reset sfr.bit	
		A.bit, $addr20	3	3/5 Note3	–	PC ← PC + 3 + jdisp8 if A.bit = 1 then reset A.bit	
		PSW.bit, $addr20	4	3/5 Note3	–	PC ← PC + 4 + jdisp8 if PSW.bit = 1 then reset PSW.bit	× × ×
		[HL].bit, $addr20	3	3/5 Note3	–	PC ← PC + 3 + jdisp8 if (HL).bit = 1 then reset (HL).bit	
		ES:[HL].bit, $addr20	4	4/6 Note3	–	PC ← PC + 4 + jdisp8 if (ES, HL).bit = 1 then reset (ES, HL).bit	
Conditional skip	SKC	–	2	1	–	Next instruction skip if CY = 1	
	SKNC	–	2	1	–	Next instruction skip if CY = 0	
	SKZ	–	2	1	–	Next instruction skip if Z = 1	
	SKNZ	–	2	1	–	Next instruction skip if Z = 0	
	SKH	–	2	1	–	Next instruction skip if (Z∨ CY)=0	
	SKNH	–	2	1	–	Next instruction skip if (Z∨ CY)=1	
CPU control	SEL Note4	RBn	2	1	–	RBS[1:0] ← n	
	NOP	–	1	1	–	No Operation	
	EI	–	3	4	–	IE ← 1 (Enable Interrupt)	
	DI	–	3	4	–	IE ← 0 (Disable Interrupt)	
	HALT	–	2	3	–	Set HALT Mode	
	STOP	–	2	3	–	Set STOP Mode	

Notes 1. Number of CPU clocks (f_{CLK}) when the internal RAM area, SFR area, or extended SFR area is accessed, or when no data is accessed.

2. Number of CPU clocks (f_{CLK}) when the code flash area is accessed, or when the data flash area is accessed by an 8-bit instruction.

3. This indicates the number of clocks “when condition is not met/when condition is met”.

4. n indicates the number of register banks (n = 0 to 3).

Remark Number of clock is when program exists in the internal ROM (flash memory) area. If fetching the instruction from the internal RAM area, the number becomes double number plus 3 clocks at a maximum.

CHAPTER 32 ELECTRICAL SPECIFICATIONS (T_A = –40 to +85°C)

Target products A: Consumer applications; T_A = –40 to +85°C
R5F10WLAAFA, R5F10WLCAFA, R5F10WLDAFA,
R5F10WLEAFA, R5F10WLFAFA, R5F10WLGAFA,
R5F10WLAAFB, R5F10WLCAFB, R5F10WLDAFB,
R5F10WLEAFB, R5F10WLFAFB, R5F10WLGAFB,
R5F10WMAAFA, R5F10WMCAFA, R5F10WMDAFA,
R5F10WMEAFA, R5F10WMFAFA, R5F10WMGAFA,
R5F10WMAAFB, R5F10WMCAFB, R5F10WMDAFB,
R5F10WMEAFB, R5F10WMFAFB, R5F10WMGAFB

G: Industrial applications; when using T_A = –40 to +105°C specification products at T_A = –40 to +85°C
R5F10WLAGFB, R5F10WLCGFB, R5F10WLDGFB,
R5F10WLEGFB, R5F10WLFGFB, R5F10WLGGFB
R5F10WMAGFB, R5F10WMCGFB, R5F10WMDGFB,
R5F10WMEGFB, R5F10WMFGFB, R5F10WMGGFB

Cautions 1. The RL78 microcontrollers have an on-chip debug function, which is provided for development and evaluation. Do not use the on-chip debug function in products designated for mass production, because the guaranteed number of rewritable times of the flash memory may be exceeded when this function is used, and product reliability therefore cannot be guaranteed. Renesas Electronics is not liable for problems occurring when the on-chip debug function is used.

2. The pins mounted depend on the product. See 2.1 Port Function to 2.2.1 With functions for each product.

32.1 Absolute Maximum Ratings

Absolute Maximum Ratings (1/3)

Parameter	Symbol	Conditions	Ratings	Unit
Supply voltage	V_{DD}		–0.5 to +6.5	V
REGC pin input voltage	V_{IREGC}	REGC	–0.3 to +2.8 and –0.3 to V_{DD} +0.3[Note 1]	V
Input voltage	V_{I1}	P00 to P07, P10 to P17, P20 to P27, P30 to P35, P40 to P47, P50 to P57, P60, P61, P70 to P77, P121 to P127, P130, P137	–0.3 to V_{DD} +0.3[Note 2]	V
	V_{I2}	P60 and P61 (N-ch open-drain)	–0.3 to +6.5	V
	V_{I3}	EXCLK, EXCLKS, $\overline{\text{RESET}}$	–0.3 to V_{DD} +0.3[Note 2]	V
Output voltage	V_{O1}	P00 to P07, P10 to P17, P20 to P27, P30 to P35, P40 to P47, P50 to P57, P60, P61, P70 to P77, P121 to P127, P130, P137	–0.3 to V_{DD} +0.3[Note 2]	V
Analog input voltage	V_{AI1}	ANI0, ANI1, ANI16 to ANI26	–0.3 to V_{DD} +0.3 and –0.3 to $AV_{REF(+)}$ +0.3[Notes 2, 3]	V

Notes 1. Connect the REGC pin to Vss via a capacitor (0.47 to 1 μF). This value regulates the absolute maximum rating of the REGC pin. Do not use this pin with voltage applied to it.

2. Must be 6.5 V or lower.

3. Do not exceed $AV_{REF(+)}$ + 0.3 V in case of A/D conversion target pin.

Caution Product quality may suffer if the absolute maximum rating is exceeded even momentarily for any parameter. That is, the absolute maximum ratings are rated values at which the product is on the verge of suffering physical damage, and therefore the product must be used under conditions that ensure that the absolute maximum ratings are not exceeded.

Remarks 1. Unless specified otherwise, the characteristics of alternate-function pins are the same as those of the port pins.

2. $AV_{REF(+)}$: + side reference voltage of the A/D converter.

3. V_{SS}: Reference voltage

Absolute Maximum Ratings (2/3)

Parameter	Symbol	Conditions		Ratings	Unit
LCD voltage	V_{L1}	V_{L1} voltage[Note 1]		–0.3 to +2.8 and –0.3 to V_{L4} +0.3	V
	V_{L2}	V_{L2} voltage[Note 1]		–0.3 to V_{L4} +0.3[Note 2]	V
	V_{L3}	V_{L3} voltage[Note 1]		–0.3 to V_{L4} +0.3[Note 2]	V
	V_{L4}	V_{L4} voltage[Note 1]		–0.3 to +6.5	V
	V_{LCAP}	CAPL, CAPH voltage[Note 1]		–0.3 to V_{L4} +0.3[Note 2]	V
	V_{OUT}	COM0 to COM7 SEG0 to SEG50 output voltage	External resistance division method	–0.3 to V_{DD} +0.3[Note 2]	V
			Capacitor split method	–0.3 to V_{DD} +0.3[Note 2]	V
			Internal voltage boosting method	–0.3 to V_{L4} +0.3[Note 2]	V

Notes 1. This value only indicates the absolute maximum ratings when applying voltage to the V_{L1}, V_{L2}, V_{L3}, and V_{L4} pins; it does not mean that applying voltage to these pins is recommended. When using the internal voltage boosting method or capacitance split method, connect these pins to V_{SS} via a capacitor (0.47 µF ± 30%) and connect a capacitor (0.47 µF ± 30%) between the CAPL and CAPH pins.

2. Must be 6.5 V or lower.

Caution Product quality may suffer if the absolute maximum rating is exceeded even momentarily for any parameter. That is, the absolute maximum ratings are rated values at which the product is on the verge of suffering physical damage, and therefore the product must be used under conditions that ensure that the absolute maximum ratings are not exceeded.

Remark V_{SS}: Reference voltage

Absolute Maximum Ratings (3/3)

Parameter	Symbol	Conditions		Ratings	Unit
Output current, high	I_{OH1}	Per pin	P00 to P07, P10 to P17, P22 to P27, P30 to P35, P40 to P47, P50 to P57, P60, P61, P70 to P77, P125 to P127, P130	–40	mA
		Total of all pins –170 mA	P00 to P07, P10 to P17, P22 to P27, P30 to P35, P40 to P47, P50 to P57, P60, P61, P70 to P77, P125 to P127, P130	–170	mA
	I_{OH2}	Per pin	P20, P21	–0.5	mA
		Total of all pins		–1	mA
Output current, low	I_{OL1}	Per pin	P00 to P07, P10 to P17, P22 to P27, P30 to P35, P40 to P47, P50 to P57, P60, P61, P70 to P77, P125 to P127, P130	40	mA
		Total of all pins 170 mA	P40 to P47, P130	70	mA
			P00 to P07, P10 to P17, P22 to P27, P30 to P35, P50 to P57, P60, P61, P70 to P77, P125 to P127	100	mA
	I_{OL2}	Per pin	P20, P21	1	mA
		Total of all pins		2	mA
Operating ambient temperature	T_A	In normal operation mode		–40 to +85	°C
		In flash memory programming mode			
Storage temperature	T_{stg}			–65 to +150	°C

Caution Product quality may suffer if the absolute maximum rating is exceeded even momentarily for any parameter. That is, the absolute maximum ratings are rated values at which the product is on the verge of suffering physical damage, and therefore the product must be used under conditions that ensure that the absolute maximum ratings are not exceeded.

Remark Unless specified otherwise, the characteristics of alternate-function pins are the same as those of the port pins.

32.2 Oscillator Characteristics

32.2.1 X1 and XT1 oscillator characteristics

(T_A = –40 to +85°C, 1.6 V ≤ V_{DD} ≤ 5.5 V, V_{SS} = 0 V)

Parameter	Resonator	Conditions	MIN.	TYP.	MAX.	Unit
X1 clock oscillation frequency (f_X)Note	Ceramic resonator/ crystal resonator	2.7 V ≤ V_{DD} ≤ 5.5 V	1.0		20.0	MHz
		2.4 V ≤ V_{DD} < 2.7 V	1.0		16.0	
		1.8 V ≤ V_{DD} < 2.4 V	1.0		8.0	
		1.6 V ≤ V_{DD} < 1.8 V	1.0		4.0	
XT1 clock oscillation frequency (f_{XT})Note	Crystal resonator		32	32.768	35	kHz

Note Indicates only permissible oscillator frequency ranges. Refer to **AC Characteristics** for instruction execution time. Request evaluation by the manufacturer of the oscillator circuit mounted on a board to check the oscillator characteristics.

Caution **Since the CPU is started by the high-speed on-chip oscillator clock after a reset release, check the X1 clock oscillation stabilization time using the oscillation stabilization time counter status register (OSTC) by the user. Determine the oscillation stabilization time of the OSTC register and the oscillation stabilization time select register (OSTS) after sufficiently evaluating the oscillation stabilization time with the resonator to be used.**

Remark When using the X1 oscillator and XT1 oscillator, see **5.4 System Clock Oscillator**.

32.2.2 On-chip oscillator characteristics

(T_A = –40 to +85°C, 1.6 V ≤ V_{DD} ≤ 5.5 V, V_{SS} = 0 V)

Parameter	Symbol	Conditions		MIN.	TYP.	MAX.	Unit
High-speed on-chip oscillator clock frequency[Notes 1, 2]	f_{IH}			1		24	MHz
High-speed on-chip oscillator clock frequency accuracy		–20 to +85°C	1.8 V ≤ V_{DD} ≤ 5.5 V	–1.0		+1.0	%
			1.6 V ≤ V_{DD} < 1.8 V	–5.0		+5.0	%
		–40 to –20°C	1.8 V ≤ V_{DD} ≤ 5.5 V	–1.5		+1.5	%
			1.6 V ≤ V_{DD} < 1.8 V	–5.5		+5.5	%
Low-speed on-chip oscillator clock frequency	f_{IL}				15		kHz
Low-speed on-chip oscillator clock frequency accuracy				–15		+15	%

Notes 1. The high-speed on-chip oscillator frequency is selected by bits 0 to 4 of the option byte (000C2H/010C2H) and bits 0 to 2 of the HOCODIV register.

2. This indicates the oscillator characteristics only. Refer to **AC Characteristics** for the instruction execution time.

32.3 DC Characteristics

32.3.1 Pin characteristics

(T_A = –40 to +85°C, 1.6 V ≤ V_{DD} ≤ 5.5 V, V_{SS} = 0 V)

Parameter	Symbol	Conditions		MIN.	TYP.	MAX.	Unit
Output current, high[Note 1]	I_{OH1}	Per pin for P00 to P07, P10 to P17, P22 to P27, P30 to P35, P40 to P47, P50 to P57, P70 to P77, P125 to P127, P130	1.6 V ≤ V_{DD} ≤ 5.5 V			–10.0[Note 2]	mA
		Total of P00 to P07, P10 to P17, P22 to P27, P30 to P35, P40 to P47, P50 to P57, P70 to P77, P125 to P127, P130 (When duty = 70%[Note 3])	4.0 V ≤ V_{DD} ≤ 5.5 V			–90.0	mA
			2.7 V ≤ V_{DD} < 4.0 V			–15.0	mA
			1.8 V ≤ V_{DD} < 2.7 V			–7.0	mA
			1.6 V ≤ V_{DD} < 1.8 V			–3.0	mA
	I_{OH2}	Per pin for P20 and P21	1.6 V ≤ V_{DD} ≤ 5.5 V			–0.1[Note 2]	mA
		Total of all pins (When duty = 70%[Note 3])	1.6 V ≤ V_{DD} ≤ 5.5 V			–0.2	mA

Notes 1. Value of the current at which the device operation is guaranteed even if the current flows from the V_{DD} pin to an output pin

2. Do not exceed the total current value.

3. Output current value under conditions where the duty factor ≤ 70%.

The output current value that has changed to the duty factor > 70% the duty ratio can be calculated with the following expression (when changing the duty factor from 70% to n%).

- Total output current of pins = (I_{OH} × 0.7)/(n × 0.01)

<Example> Where n = 80% and I_{OH} = –90.0 mA

Total output current of pins = (–90.0 × 0.7)/(80 × 0.01) ≈ –78.75 mA

However, the current that is allowed to flow into one pin does not vary depending on the duty factor. A current higher than the absolute maximum rating must not flow into one pin.

Caution P00, P04 to P07, P16, P17, P35, P42 to P44, P46, P47, P53 to P56, and P130 do not output high level in N-ch open-drain mode.

Remark Unless specified otherwise, the characteristics of alternate-function pins are the same as those of the port pins.

(T_A = –40 to +85°C, 1.6 V ≤ V_{DD} ≤ 5.5 V, V_{SS} = 0 V)

Parameter	Symbol	Conditions		MIN.	TYP.	MAX.	Unit
Output current, low[Note 1]	I_{OL1}	Per pin for P00 to P07, P10 to P17, P22 to P27, P30 to P35, P40 to P47, P50 to P57, P70 to P77, P125 to P127, P130				20.0[Note 2]	mA
		Per pin for P60 and P61				15.0[Note 2]	mA
		Total of P40 to P47, P130 (When duty = 70%[Note 3])	4.0 V ≤ V_{DD} ≤ 5.5 V			70.0	mA
			2.7 V ≤ V_{DD} < 4.0 V			15.0	mA
			1.8 V ≤ V_{DD} < 2.7 V			9.0	mA
			1.6 V ≤ V_{DD} < 1.8 V			4.5	mA
		Total of P00 to P07, P10 to P17, P22 to P27, P30 to P35, P50 to P57, P70 to P77, P125 to P127 (When duty = 70%[Note 3])	4.0 V ≤ V_{DD} ≤ 5.5 V			90.0	mA
			2.7 V ≤ V_{DD} < 4.0 V			35.0	mA
			1.8 V ≤ V_{DD} < 2.7 V			20.0	mA
			1.6 V ≤ V_{DD} < 1.8 V			10.0	mA
		Total of all pins (When duty = 70%[Note 3])				160.0	mA
	I_{OL2}	Per pin for P20 and P21				0.4[Note 2]	mA
		Total of all pins (When duty = 70%[Note 3])	1.6 V ≤ V_{DD} ≤ 5.5 V			0.8	mA

Notes 1. Value of the current at which the device operation is guaranteed even if the current flows from an output pin to the V_{SS} pin

2. Do not exceed the total current value.

3. Output current value under conditions where the duty factor ≤ 70%.

The output current value that has changed to the duty factor > 70% the duty ratio can be calculated with the following expression (when changing the duty factor from 70% to n%).

- Total output current of pins = (I_{OL} × 0.7)/(n × 0.01)

  <Example> Where n = 80% and I_{OL} = 70.0 mA

  Total output current of pins = (70.0 × 0.7)/(80 × 0.01) ≈ 61.25 mA

However, the current that is allowed to flow into one pin does not vary depending on the duty factor. A current higher than the absolute maximum rating must not flow into one pin.

Remark Unless specified otherwise, the characteristics of alternate-function pins are the same as those of the port pins.

(T_A = –40 to +85°C, 1.6 V ≤ V_{DD} ≤ 5.5 V, V_{SS} = 0 V)

Parameter	Symbol	Conditions		MIN.	TYP.	MAX.	Unit
Input voltage, high	V_{IH1}	P00 to P07, P10 to P17, P22 to P27, P30 to P35, P40 to P47, P50 to P57, P70 to P77, P125 to P127, P130, P137	Normal input buffer	0.8V_{DD}		V_{DD}	V
	V_{IH2}	P03, P05, P06, P16, P17, P34, P43, P44, P46, P47, P53, P55	TTL input buffer 4.0 V ≤ V_{DD} ≤ 5.5 V	2.2		V_{DD}	V
			TTL input buffer 3.3 V ≤ V_{DD} < 4.0 V	2.0		V_{DD}	V
			TTL input buffer 1.6 V ≤ V_{DD} < 3.3 V	1.5		V_{DD}	V
	V_{IH3}	P20, P21		0.7V_{DD}		V_{DD}	V
	V_{IH4}	P60, P61		0.7V_{DD}		6.0	V
	V_{IH5}	P121 to P124, P137, EXCLK, EXCLKS, $\overline{\text{RESET}}$		0.8V_{DD}		V_{DD}	V
Input voltage, low	V_{IL1}	P00 to P07, P10 to P17, P22 to P27, P30 to P35, P40 to P47, P50 to P57, P70 to P77, P125 to P127, P130, P137	Normal input buffer	0		0.2V_{DD}	V
	V_{IL2}	P03, P05, P06, P16, P17, P34, P43, P44, P46, P47, P53, P55	TTL input buffer 4.0 V ≤ V_{DD} ≤ 5.5 V	0		0.8	V
			TTL input buffer 3.3 V ≤ V_{DD} < 4.0 V	0		0.5	V
			TTL input buffer 1.6 V ≤ V_{DD} < 3.3 V	0		0.32	V
	V_{IL3}	P20, P21		0		0.3V_{DD}	V
	V_{IL4}	P60, P61		0		0.3V_{DD}	V
	V_{IL5}	P121 to P124, P137, EXCLK, EXCLKS, $\overline{\text{RESET}}$		0		0.2V_{DD}	V

Caution The maximum value of V_{IH} of pins P00, P04 to P07, P16, P17, P35, P42 to P44, P46, P47, P53 to P56, and P130 is V_{DD}, even in the N-ch open-drain mode.

Remark Unless specified otherwise, the characteristics of alternate-function pins are the same as those of the port pins.

(T_A = –40 to +85°C, 1.6 V ≤ V_{DD} ≤ 5.5 V, V_{SS} = 0 V)

Parameter	Symbol	Conditions		MIN.	TYP.	MAX.	Unit
Output voltage, high	V_{OH1}	P00 to P07, P10 to P17, P22 to P27, P30 to P35, P40 to P47, P50 to P57, P70 to P77, P125 to P127, P130	4.0 V ≤ V_{DD} ≤ 5.5 V, I_{OH1} = –10.0 mA	V_{DD} – 1.5			V
			4.0 V ≤ V_{DD} ≤ 5.5 V, I_{OH1} = –3.0 mA	V_{DD} – 0.7			V
			2.7 V ≤ V_{DD} ≤ 5.5 V, I_{OH1} = –2.0 mA	V_{DD} – 0.6			V
			1.8 V ≤ V_{DD} ≤ 5.5 V, I_{OH1} = –1.5 mA	V_{DD} – 0.5			V
			1.6 V ≤ V_{DD} ≤ 5.5 V, I_{OH1} = –1.0 mA	V_{DD} – 0.5			V
	V_{OH2}	P20 and P21	1.6 V ≤ V_{DD} ≤ 5.5 V, I_{OH2} = –100 µA	V_{DD} – 0.5			V
Output voltage, low	V_{OL1}	P00 to P07, P10 to P17, P22 to P27, P30 to P35, P40 to P47, P50 to P57, P70 to P77, P125 to P127, P130	4.0 V ≤ V_{DD} ≤ 5.5 V, I_{OL1} = 20 mA			1.3	V
			4.0 V ≤ V_{DD} ≤ 5.5 V, I_{OL1} = 8.5 mA			0.7	V
			2.7 V ≤ V_{DD} ≤ 5.5 V, I_{OL1} = 3.0 mA			0.6	V
			2.7 V ≤ V_{DD} ≤ 5.5 V, I_{OL1} = 1.5 mA			0.4	V
			1.8 V ≤ V_{DD} ≤ 5.5 V, I_{OL1} = 0.6 mA			0.4	V
			1.6 V ≤ V_{DD} < 1.8 V, I_{OL1} = 0.3 mA			0.4	V
	V_{OL2}	P20 and P21	1.6 V ≤ V_{DD} ≤ 5.5 V, I_{OL2} = 400 µA			0.4	V
	V_{OL3}	P60 and P61	4.0 V ≤ V_{DD} ≤ 5.5 V, I_{OL3} = 15.0 mA			2.0	V
			4.0 V ≤ V_{DD} ≤ 5.5 V, I_{OL3} = 5.0 mA			0.4	V
			2.7 V ≤ V_{DD} ≤ 5.5 V, I_{OL3} = 3.0 mA			0.4	V
			1.8 V ≤ V_{DD} ≤ 5.5 V, I_{OL3} = 2.0 mA			0.4	V
			1.6 V ≤ V_{DD} < 1.8 V, I_{OL3} = 1.0 mA			0.4	V

Caution **P00, P04 to P07, P16, P17, P35, P42 to P44, P46, P47, P53 to P56, and P130 do not output high level in N-ch open-drain mode.**

Remark Unless specified otherwise, the characteristics of alternate-function pins are the same as those of the port pins.

(T_A = –40 to +85°C, 1.6 V ≤ V_{DD} ≤ 5.5 V, V_{SS} = 0 V)

Parameter	Symbol	Conditions			MIN.	TYP.	MAX.	Unit
Input leakage current, high	I_{LIH1}	P00 to P07, P10 to P17, P22 to P27, P30 to P35, P40 to P47, P50 to P57, P60, P61, P70 to P77, P125 to P127, P130, P137	$V_I = V_{DD}$				1	μA
	I_{LIH2}	P20 and P21, $\overline{\text{RESET}}$	$V_I = V_{DD}$				1	μA
	I_{LIH3}	P121 to P124 (X1, X2, XT1, XT2, EXCLK, EXCLKS)	$V_I = V_{DD}$	In input port mode and when external clock is input			1	μA
				Resonator connected			10	μA
Input leakage current, low	I_{LIL1}	P00 to P07, P10 to P17, P22 to P27, P30 to P35, P40 to P47, P50 to P57, P60, P61, P70 to P77, P125 to P127, P130, P137	$V_I = V_{SS}$				–1	μA
	I_{LIL2}	P20 and P21, $\overline{\text{RESET}}$	$V_I = V_{SS}$				–1	μA
	I_{LIL3}	P121 to P124 (X1, X2, XT1, XT2, EXCLK, EXCLKS)	$V_I = V_{SS}$	In input port mode and when external clock is input			–1	μA
				Resonator connected			–10	μA
On-chip pull-up resistance	R_{U1}	P00 to P07, P10 to P17, P22 to P27, P30 to P35, P45 to P47, P50 to P57, P70 to P77, P125 to P127, P130	$V_I = V_{SS}$	2.4 V ≤ V_{DD} < 5.5 V	10	20	100	kΩ
				1.6 V ≤ V_{DD} < 2.4 V	10	30	100	kΩ
	R_{U2}	P40 to P44	$V_I = V_{SS}$		10	20	100	kΩ

Remark Unless specified otherwise, the characteristics of alternate-function pins are the same as those of the port pins.

32.3.2 Supply current characteristics

(T_A = –40 to +85°C, 1.6 V ≤ V_{DD} ≤ 5.5 V, V_{SS} = 0 V) (1/2)

Parameter	Symbol	Conditions					MIN.	TYP.	MAX.	Unit
Supply current[Note 1]	I_{DD1}	Operating mode	HS (high-speed main) mode[Note 5]	f_{HOCO} = 48 MHz[Note 3], f_{IH} = 24 MHz[Note 3]	Basic operation	V_{DD} = 5.0 V		2.0		mA
						V_{DD} = 3.0 V		2.0		mA
					Normal operation	V_{DD} = 5.0 V		3.8	6.5	mA
						V_{DD} = 3.0 V		3.8	6.5	mA
				f_{HOCO} = 24 MHz[Note 3], f_{IH} = 24 MHz[Note 3]	Basic operation	V_{DD} = 5.0 V		1.7		mA
						V_{DD} = 3.0 V		1.7		mA
					Normal operation	V_{DD} = 5.0 V		3.6	6.1	mA
						V_{DD} = 3.0 V		3.6	6.1	mA
				f_{HOCO} = 16 MHz[Note 3], f_{IH} = 16 MHz[Note 3]	Normal operation	V_{DD} = 5.0 V		2.7	4.7	mA
						V_{DD} = 3.0 V		2.7	4.7	mA
			LS (low-speed main) mode[Note 5]	f_{HOCO} = 8 MHz[Note 3] f_{IH} = 8 MHz[Note 3]	Normal operation	V_{DD} = 3.0 V		1.2	2.1	mA
						V_{DD} = 2.0 V		1.2	2.1	mA
			LV (low-voltage main) mode[Note 5]	f_{HOCO} = 4 MHz[Note 3], f_{IH} = 4 MHz[Note 3]	Normal operation	V_{DD} = 3.0 V		1.2	1.8	mA
						V_{DD} = 2.0 V		1.2	1.8	mA
			HS (high-speed main) mode[Note 5]	f_{MX} = 20 MHz[Note 2], V_{DD} = 5.0 V	Normal operation	Square wave input		3.0	5.1	mA
						Resonator connection		3.2	5.2	mA
				f_{MX} = 20 MHz[Note 2], V_{DD} = 3.0 V	Normal operation	Square wave input		2.9	5.1	mA
						Resonator connection		3.2	5.2	mA
				f_{MX} = 16 MHz[Note 2], V_{DD} = 5.0 V	Normal operation	Square wave input		2.5	4.4	mA
						Resonator connection		2.7	4.5	mA
				f_{MX} = 16 MHz[Note 2], V_{DD} = 3.0 V	Normal operation	Square wave input		2.5	4.4	mA
						Resonator connection		2.7	4.5	mA
				f_{MX} = 10 MHz[Note 2], V_{DD} = 5.0 V	Normal operation	Square wave input		1.9	3.0	mA
						Resonator connection		1.9	3.0	mA
				f_{MX} = 10 MHz[Note 2], V_{DD} = 3.0 V	Normal operation	Square wave input		1.9	3.0	mA
						Resonator connection		1.9	3.0	mA
			LS (low-speed main) mode[Note 5]	f_{MX} = 8 MHz[Note 2], V_{DD} = 3.0 V	Normal operation	Square wave input		1.1	2.0	mA
						Resonator connection		1.1	2.0	mA
				f_{MX} = 8 MHz[Note 2], V_{DD} = 2.0 V	Normal operation	Square wave input		1.1	2.0	mA
						Resonator connection		1.1	2.0	mA
			Subsystem clock operation	f_{SUB} = 32.768 kHz[Note 4], T_A = –40°C	Normal operation	Square wave input		4.0	5.4	μA
						Resonator connection		4.3	5.4	μA
				f_{SUB} = 32.768 kHz [Note 4], T_A = +25°C	Normal operation	Square wave input		4.0	5.4	μA
						Resonator connection		4.3	5.4	μA
				f_{SUB} = 32.768 kHz[Note 4], T_A = +50°C	Normal operation	Square wave input		4.1	7.1	μA
						Resonator connection		4.4	7.1	μA
				f_{SUB} = 32.768 kHz[Note 4], T_A = +70°C	Normal operation	Square wave input		4.3	8.7	μA
						Resonator connection		4.7	8.7	μA
				f_{SUB} = 32.768 kHz[Note 4], T_A = +85°C	Normal operation	Square wave input		4.7	12.0	μA
						Resonator connection		5.2	12.0	μA

(**Notes** and **Remarks** are listed on the next page.)

Notes 1. Total current flowing into V_{DD}, including the input leakage current flowing when the level of the input pin is fixed
<R> to V_{DD} or V_{SS}. The following points apply in the HS (high-speed main), LS (low-speed main), and LV (low-voltage main) modes.

- The currents in the "TYP." column do not include the operating currents of the peripheral modules.
- The currents in the "MAX." column include the operating currents of the peripheral modules, except for those flowing into the LCD controller/driver, A/D converter, LVD circuit, comparator, I/O port, and on-chip pull-up/pull-down resistors, and those flowing while the data flash memory is being rewritten.

In the subsystem clock operation, the currents in both the "TYP." and "MAX." columns do not include the operating currents of the peripheral modules. However, in HALT mode, including the current flowing into the real-time clock 2.

2. When high-speed on-chip oscillator and subsystem clock are stopped.

3. When high-speed system clock and subsystem clock are stopped.

4. When high-speed on-chip oscillator and high-speed system clock are stopped. When setting ultra-low power
<R> consumption oscillation (AMPHS1 = 1).

5. Relationship between operation voltage width, operation frequency of CPU and operation mode is as below.

HS (high-speed main) mode: 2.7 V ≤ V_{DD} ≤ 5.5 V@1 MHz to 24 MHz
2.4 V ≤ V_{DD} ≤ 5.5 V@1 MHz to 16 MHz
LS (low-speed main) mode: 1.8 V ≤ V_{DD} ≤ 5.5 V@1 MHz to 8 MHz
LV (low-voltage main) mode: 1.6 V ≤ V_{DD} ≤ 5.5 V@1 MHz to 4 MHz

Remarks 1. f_{MX}: High-speed system clock frequency (X1 clock oscillation frequency or external main system clock frequency)

2. f_{HOCO}: High-speed on-chip oscillator clock frequency (48 MHz max.)

3. f_{IH}: High-speed on-chip oscillator clock frequency (24 MHz max.)

4. f_{SUB}: Subsystem clock frequency (XT1 clock oscillation frequency)

5. Except subsystem clock operation, temperature condition of the TYP. value is T_A = 25°C

(T_A = –40 to +85°C, 1.6 V ≤ V_{DD} ≤ 5.5 V, V_{SS} = 0 V) (2/2)

Parameter	Symbol	Conditions				MIN.	TYP.	MAX.	Unit
Supply current[Note 1]	I_{DD2}[Note 2]	HALT mode	HS (high-speed main) mode [Note 6]	f_{HOCO} = 48 MHz[Note 4], f_{IH} = 24 MHz[Note 4]	V_{DD} = 5.0 V		0.71	1.95	mA
					V_{DD} = 3.0 V		0.71	1.95	
				f_{HOCO} = 24 MHz[Note 4], f_{IH} = 24 MHz[Note 4]	V_{DD} = 5.0 V		0.49	1.64	mA
					V_{DD} = 3.0 V		0.49	1.64	
				f_{HOCO} = 16 MHz[Note 4], f_{IH} = 16 MHz[Note 4]	V_{DD} = 5.0 V		0.43	1.11	mA
					V_{DD} = 3.0 V		0.43	1.11	
			LS (low-speed main) mode [Note 6]	f_{HOCO} = 8 MHz [Note 4], f_{IH} = 8 MHz [Note 4]	V_{DD} = 3.0 V		280	770	μA
					V_{DD} = 2.0 V		280	770	
			LV (low-voltage main) mode[Note 6]	f_{HOCO} = 4 MHz[Note 4], f_{IH} = 4 MHz[Note 4]	V_{DD} = 3.0 V		430	700	μA
					V_{DD} = 2.0 V		430	700	
			HS (high-speed main) mode [Note 6]	f_{MX} = 20 MHz[Note 3], V_{DD} = 5.0 V	Square wave input		0.31	1.42	mA
					Resonator connection		0.48	1.42	
				f_{MX} = 20 MHz[Note 3], V_{DD} = 3.0 V	Square wave input		0.29	1.42	mA
					Resonator connection		0.48	1.42	
				f_{MX} = 16 MHz[Note 3], V_{DD} = 5.0 V	Square wave input		0.26	0.86	mA
					Resonator connection		0.45	1.15	
				f_{MX} = 16 MHz[Note 3], V_{DD} = 3.0 V	Square wave input		0.25	0.86	mA
					Resonator connection		0.44	1.15	
				f_{MX} = 10 MHz[Note 3], V_{DD} = 5.0 V	Square wave input		0.20	0.63	mA
					Resonator connection		0.28	0.71	
				f_{MX} = 10 MHz[Note 3], V_{DD} = 3.0 V	Square wave input		0.19	0.63	mA
					Resonator connection		0.28	0.71	
			LS (low-speed main) mode[Note 6]	f_{MX} = 8 MHz[Note 3], V_{DD} = 3.0 V	Square wave input		100	560	μA
					Resonator connection		160	560	
				f_{MX} = 8 MHz[Note 3], V_{DD} = 2.0 V	Square wave input		100	560	μA
					Resonator connection		160	560	
			Subsystem clock operation	f_{SUB} = 32.768 kHz[Note 5], T_A = –40°C	Square wave input		0.34	0.62	μA
					Resonator connection		0.51	0.80	
				f_{SUB} = 32.768 kHz[Note 5], T_A = +25°C	Square wave input		0.38	0.62	μA
					Resonator connection		0.57	0.80	
				f_{SUB} = 32.768 kHz[Note 5], T_A = +50°C	Square wave input		0.46	2.30	μA
					Resonator connection		0.67	2.49	
				f_{SUB} = 32.768 kHz[Note 5], T_A = +70°C	Square wave input		0.65	4.03	μA
					Resonator connection		0.91	4.22	
				f_{SUB} = 32.768 kHz[Note 5], T_A = +85°C	Square wave input		1.00	8.04	μA
					Resonator connection		1.31	8.23	
	I_{DD3}	STOP mode[Note 7]	T_A = –40°C				0.18	0.52	μA
			T_A = +25°C				0.24	0.52	
			T_A = +50°C				0.33	2.21	
			T_A = +70°C				0.53	3.94	
			T_A = +85°C				0.93	7.95	

(**Notes** and **Remarks** are listed on the next page.)

Notes 1. Total current flowing into V_{DD}, including the input leakage current flowing when the level of the input pin is fixed
<R> to V_{DD} or V_{SS}. The following points apply in the HS (high-speed main), LS (low-speed main), and LV (low-voltage main) modes.

- The currents in the "TYP." column do not include the operating currents of the peripheral modules.
- The currents in the "MAX." column include the operating currents of the peripheral modules, except for those flowing into the LCD controller/driver, A/D converter, LVD circuit, comparator, I/O port, and on-chip pull-up/pull-down resistors, and those flowing while the data flash memory is being rewritten.

In the subsystem clock operation, the currents in both the "TYP." and "MAX." columns do not include the operating currents of the peripheral modules. However, in HALT mode, including the current flowing into the real-time clock 2.

In the STOP mode, the currents in both the "TYP." and "MAX." columns do not include the operating currents of the peripheral modules.

2. During HALT instruction execution by flash memory.

3. When high-speed on-chip oscillator and subsystem clock are stopped.

4. When high-speed system clock and subsystem clock are stopped.

5. When high-speed on-chip oscillator and high-speed system clock are stopped.
<R> When RTCLPC = 1 and setting ultra-low current consumption (AMPHS1 = 1).

6. Relationship between operation voltage width, operation frequency of CPU and operation mode is as below.

HS (high-speed main) mode: 2.7 V ≤ V_{DD} ≤ 5.5 V@1 MHz to 24 MHz
2.4 V ≤ V_{DD} ≤ 5.5 V@1 MHz to 16 MHz
LS (low-speed main) mode: 1.8 V ≤ V_{DD} ≤ 5.5 V@1 MHz to 8 MHz
LV (low-voltage main) mode: 1.6 V ≤ V_{DD} ≤ 5.5 V@1 MHz to 4 MHz

7. Regarding the value for current to operate the subsystem clock in STOP mode, refer to that in HALT mode.

Remarks 1. f_{MX}: High-speed system clock frequency (X1 clock oscillation frequency or external main system clock frequency)

2. f_{HOCO}: High-speed on-chip oscillator clock frequency (48 MHz max.)

3. f_{IH}: High-speed on-chip oscillator clock frequency (24 MHz max.)

4. f_{SUB}: Subsystem clock frequency (XT1 clock oscillation frequency)

5. Except subsystem clock operation and STOP mode, temperature condition of the TYP. value is T_A = 25°C

(T_A = –40 to +85°C, 1.6 V ≤ V_{DD} ≤ 5.5 V, V_{SS} = 0 V)

Parameter	Symbol	Conditions				MIN.	TYP.	MAX.	Unit
Low-speed on-chip oscillator operating current	I_{FIL} Note 1						0.20		μA
RTC2 operating current	I_{RTC} Notes 1, 2, 3	f_{SUB} = 32.768 kHz					0.02		μA
12-bit interval timer operating current	I_{TMKA} Notes 1, 2, 4						0.04		μA
Watchdog timer operating current	I_{WDT} Notes 1, 2, 5	f_{IL} = 15 kHz					0.22		μA
A/D converter operating current	I_{ADC} Notes 1, 6	When conversion at maximum speed	Normal mode, AV_{REFP} = V_{DD} = 5.0 V				1.3	1.7	mA
			Low voltage mode, AV_{REFP} = V_{DD} = 3.0 V				0.5	0.7	mA
A/D converter reference voltage current	I_{ADREF} Note 1						75.0		μA
Temperature sensor operating current	I_{TMPS} Note 1						75.0		μA
LVD operating current	I_{LVD} Notes 1, 7						0.08		μA
Comparator operating current	I_{CMP} Notes 1, 11	V_{DD} = 5.0 V, Regulator output voltage = 2.1 V	Window mode				12.5		μA
			Comparator high-speed mode				6.5		μA
			Comparator low-speed mode				1.7		μA
		V_{DD} = 5.0 V, Regulator output voltage = 1.8 V	Window mode				8.0		μA
			Comparator high-speed mode				4.0		μA
			Comparator low-speed mode				1.3		μA
Self-programming operating current	I_{FSP} Notes 1, 9						2.00	12.20	mA
BGO operating current	I_{BGO} Notes 1, 8						2.00	12.20	mA
SNOOZE operating current	I_{SNOZ} Note 1	ADC operation	While the mode is shifting Note 10				0.50	0.60	mA
			During A/D conversion, in low voltage mode, AV_{REFP} = V_{DD} = 3.0 V				1.20	1.44	mA
		Simplified SPI (CSI)/UART operation					0.70	0.84	mA
LCD operating current	I_{LCD1} Notes 1, 12, 13	External resistance division method	f_{LCD} = f_{SUB} LCD clock = 128 Hz	1/3 bias, four time slices	V_{DD} = 5.0 V, V_{L4} = 5.0 V		0.04	0.20	μA
	I_{LCD2} Note 1, 12	Internal voltage boosting method	f_{LCD} = f_{SUB} LCD clock = 128 Hz	1/3 bias, four time slices	V_{DD} = 3.0 V, V_{L4} = 3.0 V (V_{LCD} = 04H)		0.85	2.20	μA
					V_{DD} = 5.0 V, V_{L4} = 5.1 V (V_{LCD} = 12H)		1.55	3.70	μA
	I_{LCD3} Note 1, 12	Capacitor split method	f_{LCD} = f_{SUB} LCD clock = 128 Hz	1/3 bias, four time slices	V_{DD} = 3.0 V, V_{L4} = 3.0 V		0.20	0.50	μA

(**Notes** and **Remarks** are listed on the next page.)

Notes 1. Current flowing to V_{DD}.

2. When high speed on-chip oscillator and high-speed system clock are stopped.

3. Current flowing only to the real-time clock 2 (excluding the operating current of the low-speed on-chip oscillator and the XT1 oscillator). The value of the current for the RL78 microcontrollers is the sum of the values of either I_{DD1} or I_{DD2}, and I_{RTC}, when the real-time clock 2 operates in operation mode or HALT mode. When the low-speed on-chip oscillator is selected, I_{FIL} should be added. I_{DD2} subsystem clock operation includes the operational current of real-time clock 2.

4. Current flowing only to the 12-bit interval timer (excluding the operating current of the low-speed on-chip oscillator and the XT1 oscillator). The value of the current for the RL78 microcontrollers is the sum of the values of either I_{DD1} or I_{DD2}, and I_{TMKA}, when the 12-bit interval timer operates in operation mode or HALT mode. When the low-speed on-chip oscillator is selected, I_{FIL} should be added.

5. Current flowing only to the watchdog timer (including the operating current of the low-speed on-chip oscillator). The current value of the RL78 microcontrollers is the sum of I_{DD1}, I_{DD2} or I_{DD3} and I_{WDT} when the watchdog timer operates.

6. Current flowing only to the A/D converter. The current value of the RL78 microcontrollers is the sum of I_{DD1} or I_{DD2} and I_{ADC} when the A/D converter operates in an operation mode or the HALT mode.

7. Current flowing only to the LVD circuit. The current value of the RL78 microcontrollers is the sum of I_{DD1}, I_{DD2} or I_{DD3} and I_{LVD} when the LVD circuit operates.

8. Current flowing only during data flash rewrite.

9. Current flowing only during self programming.

10. For shift time to the SNOOZE mode, see **21.3.3 SNOOZE mode.**

11. Current flowing only to the comparator circuit. The current value of the RL78 microcontrollers is the sum of I_{DD1}, I_{DD2} or I_{DD3} and I_{CMP} when the comparator circuit operates.

12. Current flowing only to the LCD controller/driver. The value of the current for the RL78 microcontrollers is the sum of the supply current (I_{DD1} or I_{DD2}) and LCD operating current (I_{LCD1}, I_{LCD2}, or I_{LCD3}), when the LCD controller/driver operates in operation mode or HALT mode. However, not including the current flowing into the LCD panel. Conditions of the TYP. value and MAX. value are as follows.

- Setting 20 pins as the segment function and blinking all
- Selecting f_{SUB} for system clock when LCD clock = 128 Hz (LCDC0 = 07H)
- Setting four time slices and 1/3 bias

13. Not including the current flowing into the external division resistor when using the external resistance division method.

Remarks 1. f_{IL}: Low-speed on-chip oscillator clock frequency

2. f_{SUB}: Subsystem clock frequency (XT1 clock oscillation frequency)

3. f_{CLK}: CPU/peripheral hardware clock frequency

4. The temperature condition for the TYP. value is T_A = 25°C.

32.4 AC Characteristics

(T_A = –40 to +85°C, 1.6 V ≤ V_{DD} ≤ 5.5 V, V_{SS} = 0 V)

Parameter	Symbol	Conditions			MIN.	TYP.	MAX.	Unit
Instruction cycle (minimum instruction execution time)	T_{CY}	Main system clock (f_{MAIN}) operation	HS (high-speed main) mode	2.7 V ≤ V_{DD} ≤ 5.5 V	0.0417		1	μs
				2.4 V ≤ V_{DD} < 2.7 V	0.0625		1	μs
			LS (low-speed main) mode	1.8 V ≤ V_{DD} ≤ 5.5 V	0.125		1	μs
			LV (low-voltage main) mode	1.6 V ≤ V_{DD} ≤ 5.5 V	0.25		1	μs
		Subsystem clock (f_{SUB}) operation[Note]		1.8 V ≤ V_{DD} ≤ 5.5 V	28.5	30.5	31.3	μs
		In the self programming mode	HS (high-speed main) mode	2.7 V ≤ V_{DD} ≤ 5.5 V	0.0417		1	μs
				2.4 V ≤ V_{DD} < 2.7 V	0.0625		1	μs
			LS (low-speed main) mode	1.8 V ≤ V_{DD} ≤ 5.5 V	0.125		1	μs
			LV (low-voltage main) mode	1.8 V ≤ V_{DD} ≤ 5.5 V	0.25		1	μs
External system clock frequency	f_{EX}	2.7 V ≤ V_{DD} ≤ 5.5 V			1.0		20.0	MHz
		2.4 V ≤ V_{DD} < 2.7 V			1.0		16.0	MHz
		1.8 V ≤ V_{DD} < 2.4 V			1.0		8.0	MHz
		1.6 V ≤ V_{DD} < 1.8 V			1.0		4.0	MHz
	f_{EXS}				32		35	kHz
External system clock input high-level width, low-level width	t_{EXH}, t_{EXL}	2.7 V ≤ V_{DD} ≤ 5.5 V			24			ns
		2.4 V ≤ V_{DD} < 2.7 V			30			ns
		1.8 V ≤ V_{DD} < 2.4 V			60			ns
		1.6 V ≤ V_{DD} < 1.8 V			120			ns
	t_{EXHS}, t_{EXLS}				13.7			μs
TI00 to TI07 input high-level width, low-level width	t_{TIH}, t_{TIL}				$1/f_{MCK}+10$			ns
TO00 to TO07, TKBO00, TKBO01-0 to TKBO01-2 output frequency	f_{TO}	HS (high-speed main) mode		4.0 V ≤ V_{DD} ≤ 5.5 V			12	MHz
				2.7 V ≤ V_{DD} < 4.0 V			8	MHz
				2.4 V ≤ V_{DD} < 2.7 V			4	MHz
		LV (low-voltage main) mode		1.6 V ≤ V_{DD} ≤ 5.5 V			2	MHz
		LS (low-speed main) mode		1.8 V ≤ V_{DD} ≤ 5.5 V			4	MHz
PCLBUZ0, PCLBUZ1 output frequency	f_{PCL}	HS (high-speed main) mode		4.0 V ≤ V_{DD} ≤ 5.5 V			16	MHz
				2.7 V ≤ V_{DD} < 4.0 V			8	MHz
				2.4 V ≤ V_{DD} < 2.7 V			4	MHz
		LV (low-voltage main) mode		1.8 V ≤ V_{DD} ≤ 5.5 V			4	MHz
				1.6 V ≤ V_{DD} < 1.8 V			2	MHz
		LS (low-speed main) mode		1.8 V ≤ V_{DD} ≤ 5.5 V			4	MHz
Interrupt input high-level width, low-level width	t_{INTH}, t_{INTL}	INTP0 to INTP7		1.6 V ≤ V_{DD} ≤ 5.5 V	1			μs
Key interrupt input high-level width, low-level width	t_{KRH}, t_{KRL}	KR0 to KR7		1.8 V ≤ V_{DD} ≤ 5.5 V	250			ns
				1.6 V ≤ V_{DD} < 1.8 V	1			μs
IH-PWM output restart input high-level width	t_{IHR}	INTP0 to INTP7			2			f_{CLK}
TMKB2 forced output stop input high-level width	t_{IHR}	INTP0 to INTP2			2			f_{CLK}
$\overline{\text{RESET}}$ low-level width	t_{RSL}				10			μs

(**Note** and **Remark** are listed on the next page.)

Note Operation is not possible if 1.6 V ≤ V_{DD} < 1.8 V in LV (low-voltage main) mode while the system is operating on the subsystem clock.

Remark f_{MCK}: Timer array unit operation clock frequency
(Operation clock to be set by the CKSmn0, CKSmn1 bits of timer mode register mn (TMRmn)
m: Unit number (m = 0), n: Channel number (n = 0 to 7))

Minimum Instruction Execution Time during Main System Clock Operation

T_{CY} vs V_{DD} (HS (high-speed main) mode)

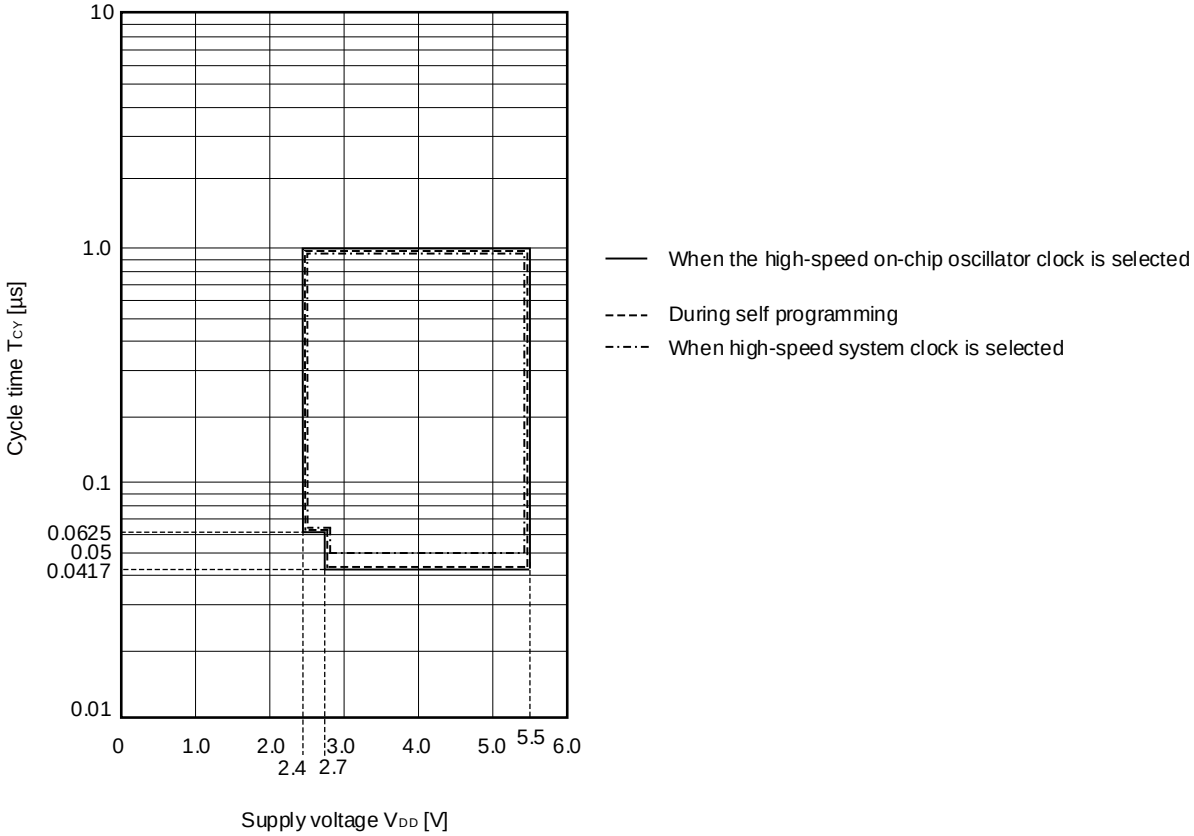

T_{CY} vs V_{DD} (LS (low-speed main) mode)

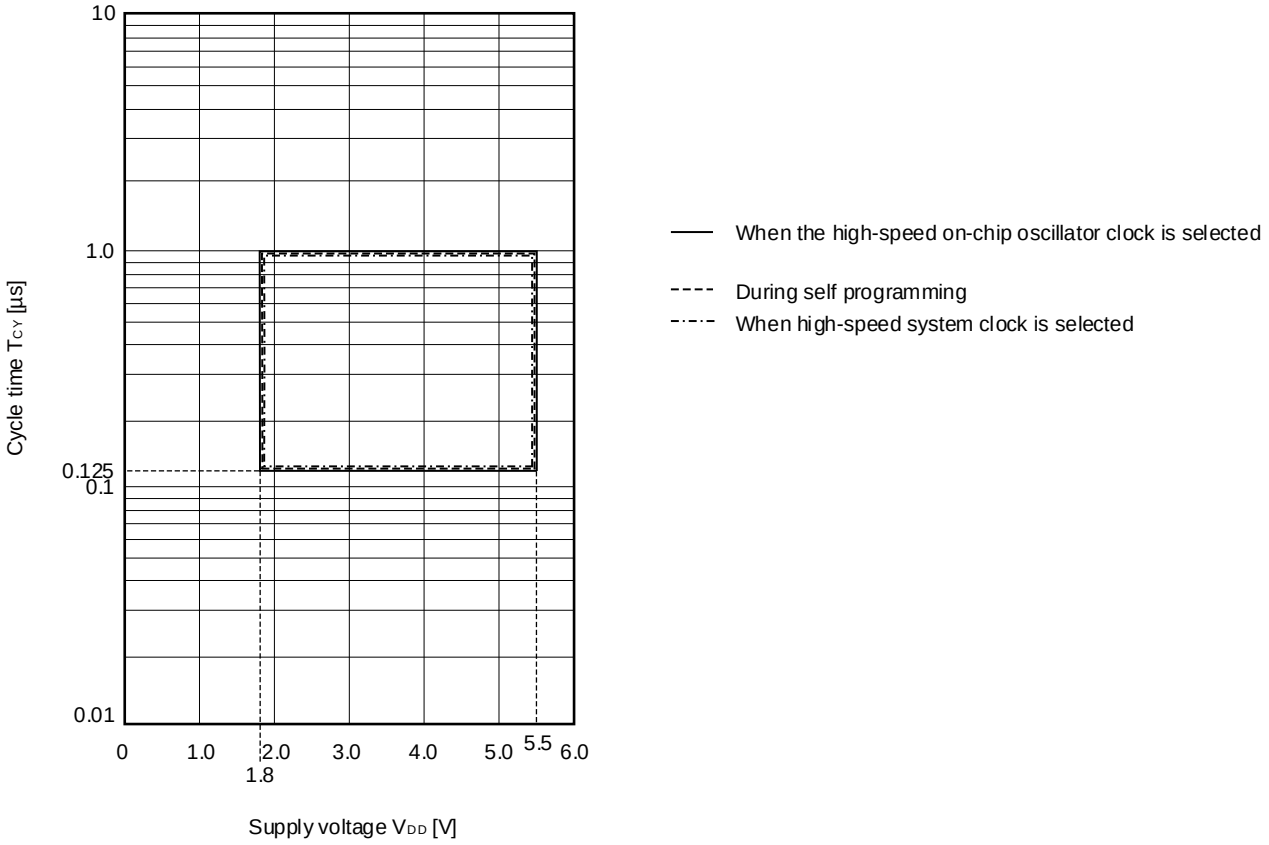

T_{CY} vs V_{DD} (LV (low-voltage main) mode)

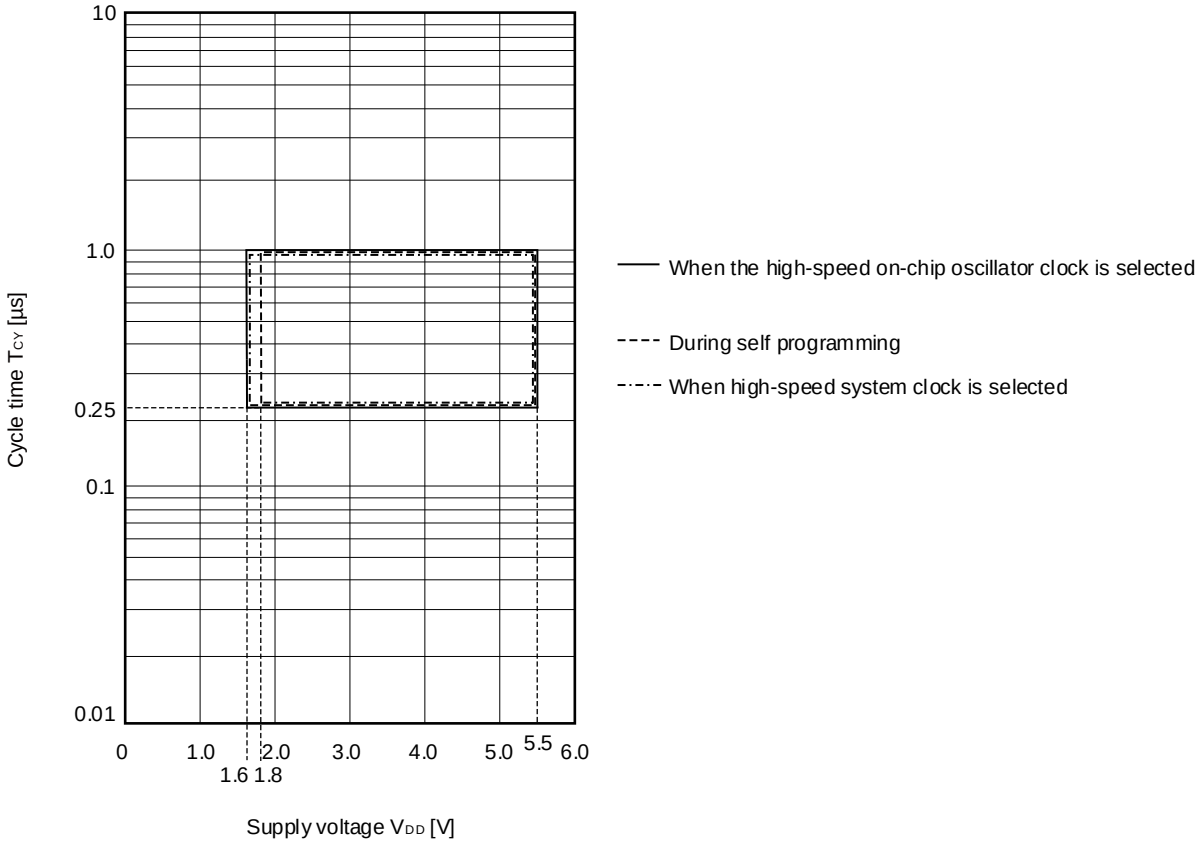

AC Timing Test Points

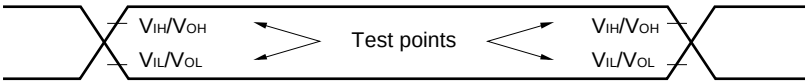

External System Clock Timing

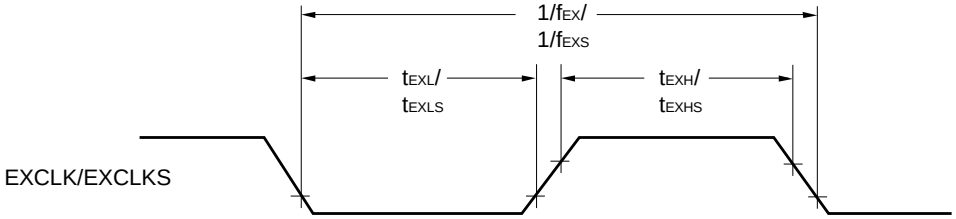

TI/TO Timing

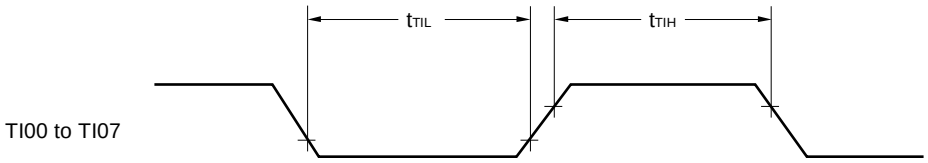

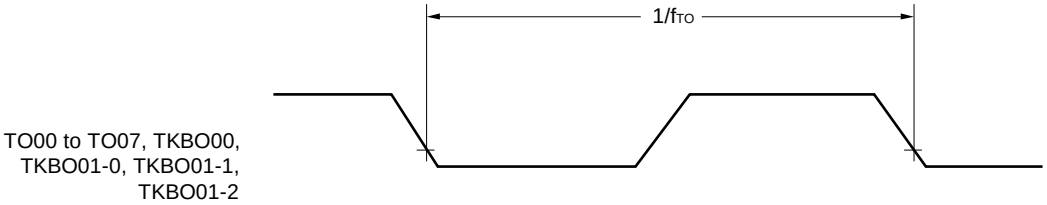

Interrupt Request Input Timing

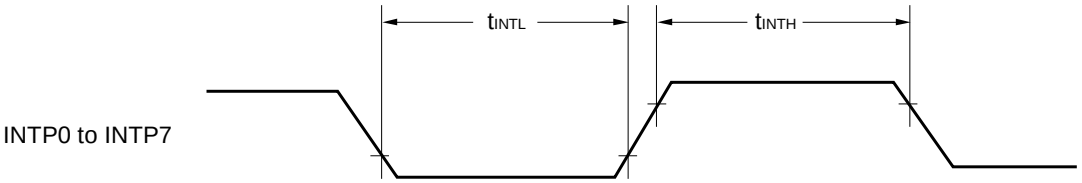

Key Interrupt Input Timing

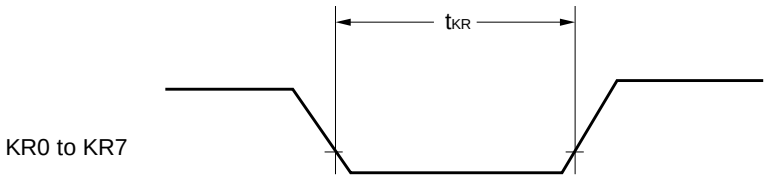

$\overline{\text{RESET}}$ Input Timing

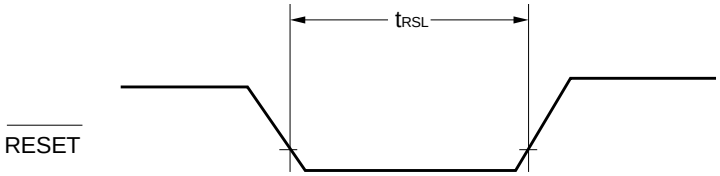

32.5 Peripheral Functions Characteristics

AC Timing Test Points

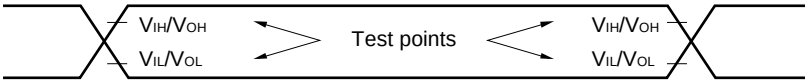

32.5.1 Serial array unit

(1) During communication at same potential (UART mode)
(T_A = –40 to +85°C, 1.6 V ≤ V_{DD} ≤ 5.5 V, V_{SS} = 0 V)

Parameter	Symbol	Conditions	HS (high-speed main) Mode		LS (low-speed main) Mode		LV (low-voltage main) Mode		Unit
			MIN.	MAX.	MIN.	MAX.	MIN.	MAX.	
Transfer rate[Note 1]		2.4 V≤ V_{DD} ≤ 5.5 V		f_{MCK}/6		f_{MCK}/6		f_{MCK}/6	bps
		Theoretical value of the maximum transfer rate f_{MCK} = f_{CLK}[Note 2]		4.0		1.3		0.6	Mbps
		1.8 V ≤ V_{DD} ≤ 5.5 V		–		f_{MCK}/6		f_{MCK}/6	bps
		Theoretical value of the maximum transfer rate f_{MCK} = f_{CLK}[Note 2]		–		1.3		0.6	Mbps
		1.6 V ≤ V_{DD} ≤ 5.5 V		–		–		f_{MCK}/6	bps
		Theoretical value of the maximum transfer rate f_{MCK} = f_{CLK}[Note 2]		–		–		0.6	Mbps

Notes 1. Transfer rate in the SNOOZE mode is 4800 bps only.

2. The maximum operating frequencies of the CPU/peripheral hardware clock (f_{CLK}) are:

HS (high-speed main) mode: 24 MHz (2.7 V ≤ V_{DD} ≤ 5.5 V)
16 MHz (2.4 V ≤ V_{DD} ≤ 5.5 V)
LS (low-speed main) mode: 8 MHz (1.8 V ≤ V_{DD} ≤ 5.5 V)
LV (low-voltage main) mode: 4 MHz (1.6 V ≤ V_{DD} ≤ 5.5 V)

Caution Select the normal input buffer for the RxDq pin and the normal output mode for the TxDq pin by using port input mode register g (PIMg) and port output mode register g (POMg).

UART mode connection diagram (during communication at same potential)

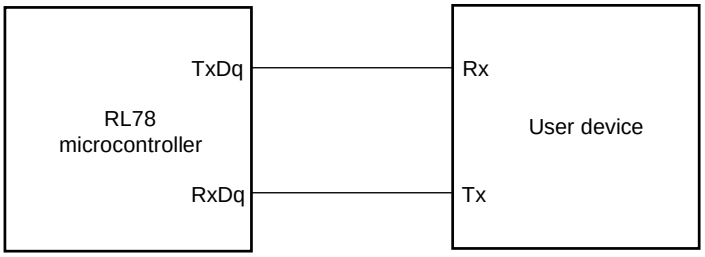

UART mode bit width (during communication at same potential) (reference)

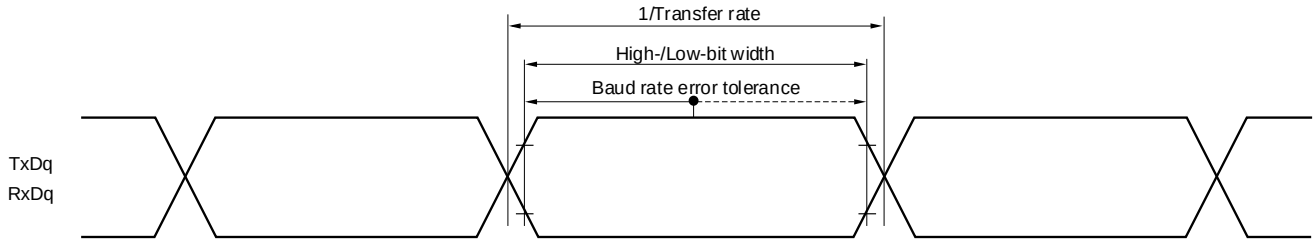

Remarks 1. q: UART number (q = 0 to 3), g: PIM and POM number (g = 0, 1, 3)

2. f_{MCK}: Serial array unit operation clock frequency
(Operation clock to be set by the CKSmn bit of serial mode register mn (SMRmn). m: Unit number, n: Channel number (mn = 00 to 03, 10 to 13))

(2) During communication at same potential (Simplified SPI (CSI) mode) (master mode, SCKp... internal clock output)

(T_A = –40 to +85°C, 1.6 V ≤ V_{DD} ≤ 5.5 V, V_{SS} = 0 V)

Parameter	Symbol	Conditions		HS (high-speed main) Mode		LS (low-speed main) Mode		LV (low-voltage main) Mode		Unit
				MIN.	MAX.	MIN.	MAX.	MIN.	MAX.	
SCKp cycle time	t_{KCY1}	2.7 V ≤ V_{DD} ≤ 5.5 V		167 Note 1		500 Note 1		1000 Note 1		ns
		2.4 V ≤ V_{DD} ≤ 5.5 V		250 Note 1		500 Note 1		1000 Note 1		ns
		1.8 V ≤ V_{DD} ≤ 5.5 V		–		500 Note 1		1000 Note 1		ns
		1.6 V ≤ V_{DD} ≤ 5.5 V		–		–		1000 Note 1		ns
SCKp high-/low-level width	t_{KH1}, t_{KL1}	4.0 V ≤ V_{DD} ≤ 5.5 V		t_{KCY1}/2–12		t_{KCY1}/2–50		t_{KCY1}/2–50		ns
		2.7 V ≤ V_{DD} ≤ 5.5 V		t_{KCY1}/2–18		t_{KCY1}/2–50		t_{KCY1}/2–50		ns
		2.4 V ≤ V_{DD} ≤ 5.5 V		t_{KCY1}/2–38		t_{KCY1}/2–50		t_{KCY1}/2–50		ns
		1.8 V ≤ V_{DD} ≤ 5.5 V		–		t_{KCY1}/2–50		t_{KCY1}/2–50		ns
		1.6 V ≤ V_{DD} ≤ 5.5 V		–		–		t_{KCY1}/2–100		ns
SIp setup time (to SCKp↑) Note 2	t_{SIK1}	2.7 V ≤ V_{DD} ≤ 5.5 V		44		110		110		ns
		2.4 V ≤ V_{DD} ≤ 5.5 V		75		110		110		ns
		1.8 V ≤ V_{DD} ≤ 5.5 V		–		110		110		ns
		1.8 V ≤ V_{DD} ≤ 5.5 V		–		–		220		ns
SIp hold time (from SCKp↑) Note 3	t_{KSI1}	2.4 V ≤ V_{DD} ≤ 5.5 V		19		19		19		ns
		1.8 V ≤ V_{DD} ≤ 5.5 V		–		19		19		ns
		1.6 V ≤ V_{DD} ≤ 5.5 V		–		–		19		ns
Delay time from SCKp↓ to SOp output Note 4	t_{KSO1}	C = 30 pF Note 5	2.4 V ≤ V_{DD} ≤ 5.5 V		25		25		25	ns
			1.8 V ≤ V_{DD} ≤ 5.5 V		–		25		25	ns
			1.6 V ≤ V_{DD} ≤ 5.5 V		–		–		25	ns

Notes 1. The value must also be equal to or more than 2/f_{CLK} for CSI00 and equal to or more than 4/f_{CLK} for CSI10.

2. When DAPmn = 0 and CKPmn = 0, or DAPmn = 1 and CKPmn = 1. The SIp setup time becomes "to SCKp↓" when DAPmn = 0 and CKPmn = 1, or DAPmn = 1 and CKPmn = 0.

3. When DAPmn = 0 and CKPmn = 0, or DAPmn = 1 and CKPmn = 1. The SIp hold time becomes "from SCKp↓" when DAPmn = 0 and CKPmn = 1, or DAPmn = 1 and CKPmn = 0.

4. When DAPmn = 0 and CKPmn = 0, or DAPmn = 1 and CKPmn = 1. The delay time to SOp output becomes "from SCKp↑" when DAPmn = 0 and CKPmn = 1, or DAPmn = 1 and CKPmn = 0.

5. C is the load capacitance of the SCKp and SOp output lines.

Caution Select the normal input buffer for the SIp pin and the normal output mode for the SOp pin and SCKp pin by using port input mode register g (PIMg) and port output mode register g (POMg).

Remarks 1. p: CSI number (p = 00, 10), m: Unit number (m = 0), n: Channel number (n = 0, 2), g: PIM and POM numbers (g = 0, 1)

2. f_{MCK}: Serial array unit operation clock frequency (Operation clock to be set by the CKSmn bit of serial mode register mn (SMRmn). m: Unit number, n: Channel number (mn = 00, 02))

(3) During communication at same potential (Simplified SPI (CSI) mode) (slave mode, SCKp... external clock input)

(T_A = –40 to +85°C, 1.6 V ≤ V_{DD} ≤ 5.5 V, V_{SS} = 0 V)

Parameter	Symbol	Conditions		HS (high-speed main) Mode		LS (low-speed main) Mode		LV (low-voltage main) Mode		Unit
				MIN.	MAX.	MIN.	MAX.	MIN.	MAX.	
SCKp cycle time[Note 5]	t_{KCY2}	4.0 V ≤ V_{DD} ≤ 5.5 V	f_{MCK} > 20 MHz	8/f_{MCK}		–		–		ns
			f_{MCK} ≤ 20 MHz	6/f_{MCK}		6/f_{MCK}		6/f_{MCK}		ns
		2.7 V ≤ V_{DD} ≤ 5.5 V	f_{MCK} > 16 MHz	8/f_{MCK}		–		–		ns
			f_{MCK} ≤ 16 MHz	6/f_{MCK}		6/f_{MCK}		6/f_{MCK}		ns
		2.4 V ≤ V_{DD} ≤ 5.5 V		6/f_{MCK} and 500		6/f_{MCK}		6/f_{MCK}		ns
		1.8 V ≤ V_{DD} ≤ 5.5 V		–		6/f_{MCK}		6/f_{MCK}		ns
		1.6 V ≤ V_{DD} ≤ 5.5 V		–		–		6/f_{MCK}		ns
SCKp high-/low-level width	t_{KH2}, t_{KL2}	4.0 V ≤ V_{DD} ≤ 5.5 V		t_{KCY2}/2–7		t_{KCY2}/2–7		t_{KCY2}/2–7		ns
		2.7 V ≤ V_{DD} ≤ 5.5 V		t_{KCY2}/2–8		t_{KCY2}/2–8		t_{KCY2}/2–8		ns
		2.4 V ≤ V_{DD} ≤ 5.5 V		t_{KCY2}/2–18		t_{KCY2}/2–18		t_{KCY2}/2–18		ns
		1.8 V ≤ V_{DD} ≤ 5.5 V		–		t_{KCY2}/2–18		t_{KCY2}/2–18		ns
		1.6 V ≤ V_{DD} ≤ 5.5 V		–		–		t_{KCY2}/2–66		ns
SIp setup time (to SCKp↑)[Note 1]	t_{SIK2}	2.7 V ≤ V_{DD} ≤ 5.5 V		1/f_{MCK}+20		1/f_{MCK}+30		1/f_{MCK}+30		ns
		2.4 V ≤ V_{DD} ≤ 5.5 V		1/f_{MCK}+30		1/f_{MCK}+30		1/f_{MCK}+30		ns
		1.8 V ≤ V_{DD} ≤ 5.5 V		–		1/f_{MCK}+30		1/f_{MCK}+30		ns
		1.6 V ≤ V_{DD} ≤ 5.5 V		–		–		1/f_{MCK}+40		ns
SIp hold time (from SCKp↑)[Note 2]	t_{KSI2}	2.4 V ≤ V_{DD} ≤ 5.5 V		1/f_{MCK}+31		1/f_{MCK}+31		1/f_{MCK}+31		ns
		1.8 V ≤ V_{DD} ≤ 5.5 V		–		1/f_{MCK}+31		1/f_{MCK}+31		ns
		1.6 V ≤ V_{DD} ≤ 5.5 V		–		–		1/f_{MCK}+250		ns
Delay time from SCKp↓ to SOp output[Note 3]	t_{KSO2}	C = 30 pF[Note 4]	2.7 V ≤ V_{DD} ≤ 5.5 V		2/f_{MCK}+44		2/f_{MCK}+110		2/f_{MCK}+110	ns
			2.4 V ≤ V_{DD} ≤ 5.5 V		2/f_{MCK}+75		2/f_{MCK}+110		2/f_{MCK}+110	ns
			1.8 V ≤ V_{DD} ≤ 5.5 V		–		2/f_{MCK}+110		2/f_{MCK}+110	ns
			1.6 V ≤ V_{DD} ≤ 5.5 V		–		–		2/f_{MCK}+220	ns

Notes 1. When DAPmn = 0 and CKPmn = 0, or DAPmn = 1 and CKPmn = 1. The SIp setup time becomes "to SCKp↓" when DAPmn = 0 and CKPmn = 1, or DAPmn = 1 and CKPmn = 0.

2. When DAPmn = 0 and CKPmn = 0, or DAPmn = 1 and CKPmn = 1. The SIp hold time becomes "from SCKp↓" when DAPmn = 0 and CKPmn = 1, or DAPmn = 1 and CKPmn = 0.

3. When DAPmn = 0 and CKPmn = 0, or DAPmn = 1 and CKPmn = 1. The delay time to SOp output becomes "from SCKp↑" when DAPmn = 0 and CKPmn = 1, or DAPmn = 1 and CKPmn = 0.

4. C is the load capacitance of the SOp output lines.

5. Transfer rate in SNOOZE mode: MAX. 1 Mbps

Caution Select the normal input buffer for the SIp pin and SCKp pin and the normal output mode for the SOp pin by using port input mode register g (PIMg) and port output mode register g (POMg).

Remarks 1. p: CSI number (p = 00, 10), m: Unit number (m = 0), n: Channel number (n = 0, 2), g: PIM number (g = 0, 1)

2. f_{MCK}: Serial array unit operation clock frequency (Operation clock to be set by the CKSmn bit of serial mode register mn (SMRmn). m: Unit number, n: Channel number (mn = 00, 02))

Simplified SPI (CSI) mode connection diagram (during communication at same potential)

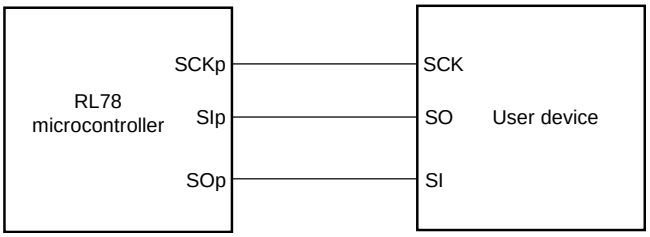

Simplified SPI (CSI) mode serial transfer timing (during communication at same potential)
(When DAPmn = 0 and CKPmn = 0, or DAPmn = 1 and CKPmn = 1.)

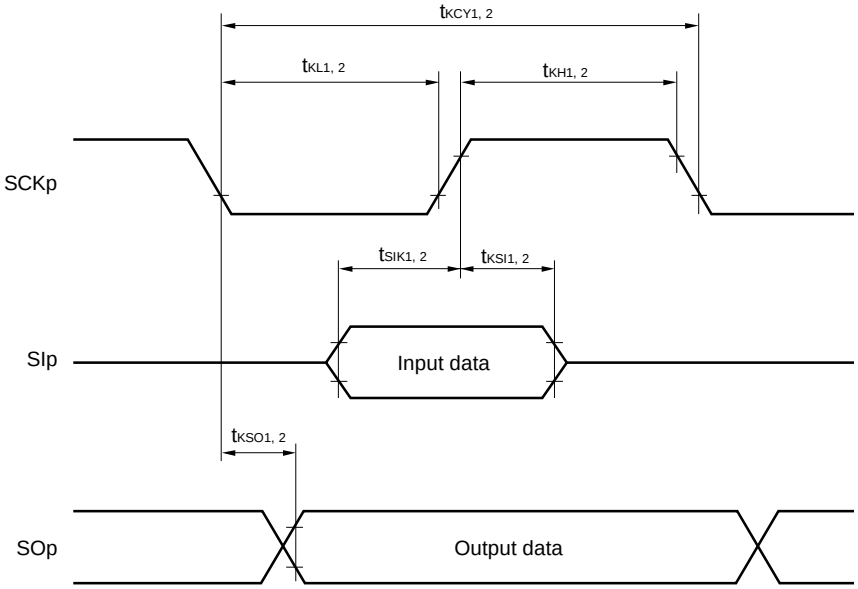

Simplified SPI (CSI) mode serial transfer timing (during communication at same potential)
(When DAPmn = 0 and CKPmn = 1, or DAPmn = 1 and CKPmn = 0.)

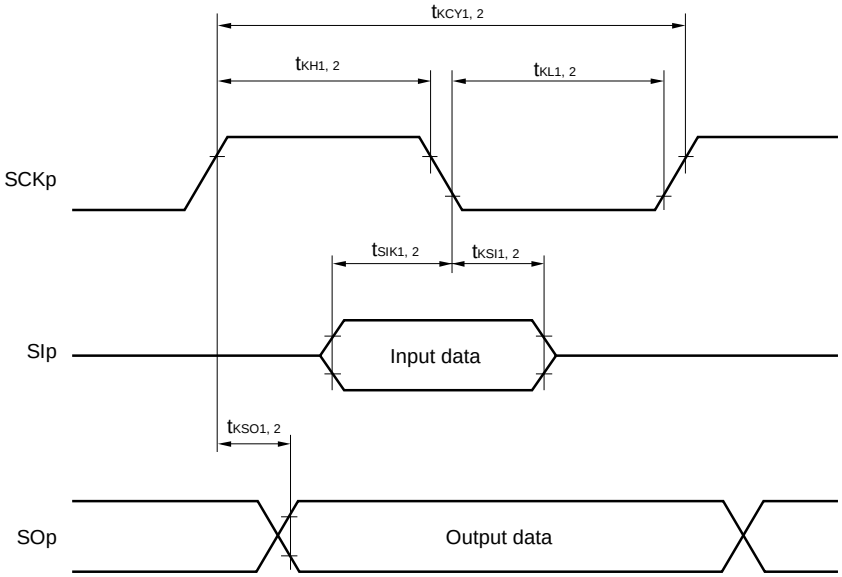

Remarks 1. p: CSI number (p = 00, 10)

2. m: Unit number, n: Channel number (mn = 00, 02)

(4) During communication at same potential (simplified I²C mode)
(T_A = –40 to +85°C, 1.6 V ≤ V_{DD} ≤ 5.5 V, V_{SS} = 0 V)

Parameter	Symbol	Conditions	HS (high-speed main) Mode		LS (low-speed main) Mode		LV (low-voltage main) Mode		Unit
			MIN.	MAX.	MIN.	MAX.	MIN.	MAX.	
SCLr clock frequency	f_{SCL}	2.7 V ≤ V_{DD} ≤ 5.5 V, C_b = 50 pF, R_b = 2.7 kΩ		1000 Note 1		400 Note 1		400 Note 1	kHz
		1.8 V (2.4 V Note 3) ≤ V_{DD} ≤ 5.5 V, C_b = 100 pF, R_b = 3 kΩ		400 Note 1		400 Note 1		400 Note 1	kHz
		1.8 V (2.4 V Note 3) ≤ V_{DD} < 2.7 V, C_b = 100 pF, R_b = 5 kΩ		300 Note 1		300 Note 1		300 Note 1	kHz
		1.6 V ≤ V_{DD} < 1.8 V, C_b = 100 pF, R_b = 5 kΩ		–		–		250 Note 1	kHz
Hold time when SCLr = "L"	t_{LOW}	2.7 V ≤ V_{DD} ≤ 5.5 V, C_b = 50 pF, R_b = 2.7 kΩ	475		1150		1150		ns
		1.8 V (2.4 V Note 3) ≤ V_{DD} ≤ 5.5 V, C_b = 100 pF, R_b = 3 kΩ	1150		1150		1150		ns
		1.8 V (2.4 V Note 3) ≤ V_{DD} < 2.7 V, C_b = 100 pF, R_b = 5 kΩ	1550		1550		1550		ns
		1.6 V ≤ V_{DD} < 1.8 V, C_b = 100 pF, R_b = 5 kΩ	–		–		1850		ns
Hold time when SCLr = "H"	t_{HIGH}	2.7 V ≤ V_{DD} ≤ 5.5 V, C_b = 50 pF, R_b = 2.7 kΩ	475		1150		1150		ns
		1.8 V (2.4 V Note 3) ≤ V_{DD} ≤ 5.5 V, C_b = 100 pF, R_b = 3 kΩ	1150		1150		1150		ns
		1.8 V (2.4 V Note 3) ≤ V_{DD} < 2.7 V, C_b = 100 pF, R_b = 5 kΩ	1550		1550		1550		ns
		1.6 V ≤ V_{DD} < 1.8 V, C_b = 100 pF, R_b = 5 kΩ	–		–		1850		ns
Data setup time (reception)	$t_{SU:DAT}$	2.7 V ≤ V_{DD} ≤ 5.5 V, C_b = 50 pF, R_b = 2.7 kΩ	$1/f_{MCK}$+ 85 Note 2		$1/f_{MCK}$+ 145 Note 2		$1/f_{MCK}$+ 145 Note 2		ns
		1.8 V (2.4 V Note 3) ≤ V_{DD} ≤ 5.5 V, C_b = 100 pF, R_b = 3 kΩ	$1/f_{MCK}$+ 145 Note 2		$1/f_{MCK}$+ 145 Note 2		$1/f_{MCK}$+ 145 Note 2		ns
		1.8 V (2.4 V Note 3) ≤ V_{DD} < 2.7 V, C_b = 100 pF, R_b = 5 kΩ	$1/f_{MCK}$+ 230 Note 2		$1/f_{MCK}$+ 230 Note 2		$1/f_{MCK}$+ 230 Note 2		ns
		1.6 V ≤ V_{DD} < 1.8 V, C_b = 100 pF, R_b = 5 kΩ	–		–		$1/f_{MCK}$+ 290 Note 2		ns
Data hold time (transmission)	$t_{HD:DAT}$	2.7 V ≤ V_{DD} ≤ 5.5 V, C_b = 50 pF, R_b = 2.7 kΩ	0	305	0	305	0	305	ns
		1.8 V (2.4 V Note 3) ≤ V_{DD} ≤ 5.5 V, C_b = 100 pF, R_b = 3 kΩ	0	355	0	355	0	355	ns
		1.8 V (2.4 V Note 3) ≤ V_{DD} < 2.7 V, C_b = 100 pF, R_b = 5 kΩ	0	405	0	405	0	405	ns
		1.6 V ≤ V_{DD} < 1.8 V, C_b = 100 pF, R_b = 5 kΩ	–	–	–	–	0	405	ns

(**Notes**, **Caution**, and **Remarks** are listed on the next page.)

Notes 1. The value must also be equal to or less than $f_{MCK}/4$.

2. Set the f_{MCK} value to keep the hold time of SCLr = "L" and SCLr = "H".

3. Condition in the HS (high-speed main) mode

Caution Select the normal input buffer and the N-ch open drain output (V_{DD} tolerance) mode for the SDAr pin and the normal output mode for the SCLr pin by using port input mode register g (PIMg) and port output mode register g (POMg).

Simplified I²C mode connection diagram (during communication at same potential)

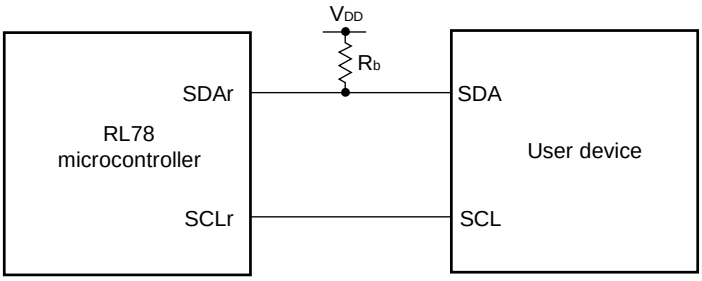

Simplified I²C mode serial transfer timing (during communication at same potential)

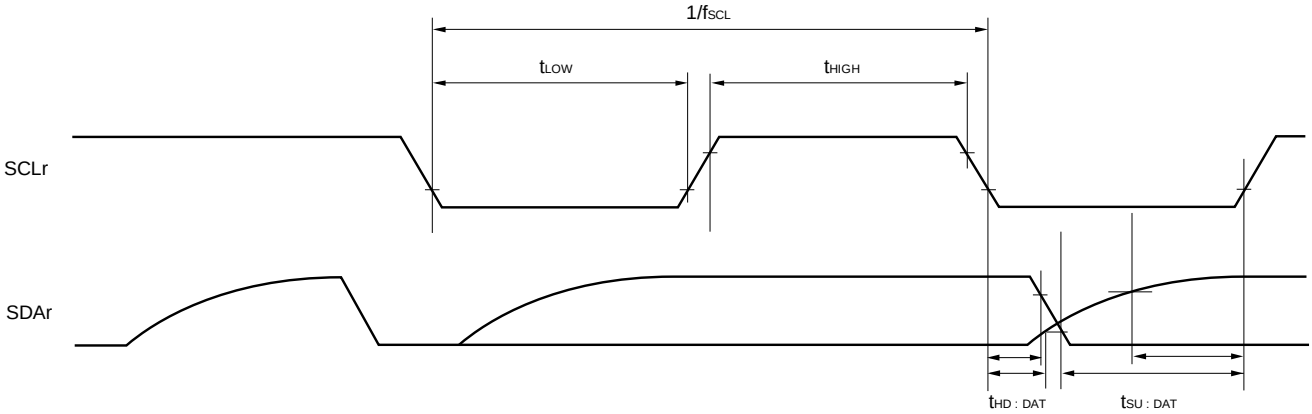

Remarks 1. R_b[Ω]: Communication line (SDAr) pull-up resistance, C_b[F]: Communication line (SDAr, SCLr) load capacitance

2. r: IIC number (r = 00, 10), g: PIM and POM number (g = 0, 1)

3. f_{MCK}: Serial array unit operation clock frequency
(Operation clock to be set by the CKSmn bit of serial mode register mn (SMRmn). m: Unit number (m = 0), n: Channel number (n = 0-3), mn = 00-03, 10-13)

(5) Communication at different potential (1.8 V, 2.5 V, 3 V) (UART mode) (1/2)

(T_A = –40 to +85°C, 1.8 V ≤ V_{DD} ≤ 5.5 V, V_{SS} = 0 V)

Parameter	Symbol	Conditions		HS (high-speed main) Mode		LS (low-speed main) Mode		LV (low-voltage main) Mode		Unit
				MIN.	MAX.	MIN.	MAX.	MIN.	MAX.	
Transfer rate		Reception	4.0 V ≤ V_{DD} ≤ 5.5 V, 2.7 V ≤ V_b ≤ 4.0 V		f_{MCK}/6 Note 1		f_{MCK}/6 Note 1		f_{MCK}/6 Note 1	bps
			Theoretical value of the maximum transfer rate f_{MCK} = f_{CLK} Note 3		4.0		1.3		0.6	Mbps
			2.7 V ≤ V_{DD} < 4.0 V, 2.3 V ≤ V_b ≤ 2.7 V		f_{MCK}/6 Note 1		f_{MCK}/6 Note 1		f_{MCK}/6 Note 1	bps
			Theoretical value of the maximum transfer rate f_{MCK} = f_{CLK} Note 3		4.0		1.3		0.6	Mbps
			1.8 V (2.4 V Note 4) ≤ V_{DD} < 3.3 V, 1.6 V ≤ V_b ≤ 2.0 V		f_{MCK}/6 Note s1, 2		f_{MCK}/6 Notes 1, 2		f_{MCK}/6 Notes 1, 2	bps
			Theoretical value of the maximum transfer rate f_{MCK} = f_{CLK} Note 3		4.0		1.3		0.6	Mbps

Notes 1. Transfer rate in SNOOZE mode is 4800 bps only.

2. Use it with V_{DD} ≥ V_b.

3. The maximum operating frequencies of the CPU/peripheral hardware clock (f_{CLK}) are:

HS (high-speed main) mode: 24 MHz (2.7 V ≤ V_{DD} ≤ 5.5 V)
16 MHz (2.4 V ≤ V_{DD} ≤ 5.5 V)
LS (low-speed main) mode: 8 MHz (1.8 V ≤ V_{DD} ≤ 5.5 V)
LV (low-voltage main) mode: 4 MHz (1.6 V ≤ V_{DD} ≤ 5.5 V)

4. Condition in the HS (high-speed main) mode

Caution Select the TTL input buffer for the RxDq pin and the N-ch open drain output (V_{DD} tolerance) mode for the TxDq pin by using port input mode register g (PIMg) and port output mode register g (POMg). For V_{IH} and V_{IL}, see the DC characteristics with TTL input buffer selected.

Remarks 1. V_b[V]: Communication line voltage

2. q: UART number (q = 0 to 3), g: PIM and POM number (g = 0, 1, 3)

3. f_{MCK}: Serial array unit operation clock frequency
(Operation clock to be set by the CKSmn bit of serial mode register mn (SMRmn). m: Unit number, n: Channel number (mn = 00 to 03, 10 to 13)

(5) Communication at different potential (1.8 V, 2.5 V, 3 V) (UART mode) (2/2)

(T_A = –40 to +85°C, 1.8 V ≤ V_{DD} ≤ 5.5 V, V_{SS} = 0 V)

Parameter	Symbol	Conditions		HS (high-speed main) Mode		LS (low-speed main) Mode		LV (low-voltage main) Mode		Unit
				MIN.	MAX.	MIN.	MAX.	MIN.	MAX.	
Transfer rate		Transmission	4.0 V ≤ V_{DD} ≤ 5.5 V, 2.7 V ≤ V_b ≤ 4.0 V		**Note 1**		**Note 1**		**Note 1**	bps
			Theoretical value of the maximum transfer rate (C_b = 50 pF, R_b = 1.4 kΩ, V_b = 2.7 V)		2.8 Note 2		2.8 Note 2		2.8 Note 2	Mbps
			2.7 V ≤ V_{DD} < 4.0 V, 2.3 V ≤ V_b ≤ 2.7 V		**Note 3**		**Note 3**		**Note 3**	bps
			Theoretical value of the maximum transfer rate (C_b = 50 pF, R_b = 2.7 kΩ, V_b = 2.3 V)		1.2 Note 4		1.2 Note 4		1.2 Note 4	Mbps
			1.8 V (2.4 V Note 8) ≤ V_{DD} < 3.3 V, 1.6 V ≤ V_b ≤ 2.0 V		**Notes 5, 6**		**Notes 5, 6**		**Notes 5, 6**	bps
			Theoretical value of the maximum transfer rate (C_b = 50 pF, R_b = 5.5 kΩ, V_b = 1.6 V)		0.43 Note 7		0.43 Note 7		0.43 Note 7	Mbps

Notes 1. The smaller maximum transfer rate derived by using f_{MCK}/6 or the following expression is the valid maximum transfer rate.

Expression for calculating the transfer rate when 4.0 V ≤ V_{DD} ≤ 5.5 V and 2.7 V ≤ V_b ≤ 4.0 V

$$\text{Maximum transfer rate} = \frac{1}{\{-C_b \times R_b \times \ln(1 - \frac{2.2}{V_b})\} \times 3} \text{ [bps]}$$

$$\text{Baud rate error (theoretical value)} = \frac{\frac{1}{\text{Transfer rate} \times 2} - \{-C_b \times R_b \times \ln(1 - \frac{2.2}{V_b})\}}{(\frac{1}{\text{Transfer rate}}) \times \text{Number of transferred bits}} \times 100 \text{ [\%]}$$

* This value is the theoretical value of the relative difference between the transmission and reception sides.

2. This value as an example is calculated when the conditions described in the “Conditions” column are met. Refer to **Note 1** above to calculate the maximum transfer rate under conditions of the customer.

3. The smaller maximum transfer rate derived by using f_{MCK}/6 or the following expression is the valid maximum transfer rate.

Expression for calculating the transfer rate when 2.7 V ≤ V_{DD} < 4.0 V and 2.3 V ≤ V_b ≤ 2.7 V

$$\text{Maximum transfer rate} = \frac{1}{\{-C_b \times R_b \times \ln(1 - \frac{2.0}{V_b})\} \times 3} \text{ [bps]}$$

$$\text{Baud rate error (theoretical value)} = \frac{\frac{1}{\text{Transfer rate} \times 2} - \{-C_b \times R_b \times \ln(1 - \frac{2.0}{V_b})\}}{(\frac{1}{\text{Transfer rate}}) \times \text{Number of transferred bits}} \times 100 \text{ [\%]}$$

* This value is the theoretical value of the relative difference between the transmission and reception sides.

4. This value as an example is calculated when the conditions described in the “Conditions” column are met. Refer to **Note 3** above to calculate the maximum transfer rate under conditions of the customer.

5. Use it with V_{DD} ≥ V_b.

Notes 6. The smaller maximum transfer rate derived by using $f_{MCK}/6$ or the following expression is the valid maximum transfer rate.

Expression for calculating the transfer rate when 1.8 V (2.4 V[Note 8]) ≤ V_{DD} < 3.3 V and 1.6 V ≤ V_b ≤ 2.0 V

$$\text{Maximum transfer rate} = \frac{1}{\{-C_b \times R_b \times \ln(1 - \frac{1.5}{V_b})\} \times 3} \text{ [bps]}$$

$$\text{Baud rate error (theoretical value)} = \frac{\frac{1}{\text{Transfer rate} \times 2} - \{-C_b \times R_b \times \ln(1 - \frac{1.5}{V_b})\}}{(\frac{1}{\text{Transfer rate}}) \times \text{Number of transferred bits}} \times 100 \text{ [\%]}$$

* This value is the theoretical value of the relative difference between the transmission and reception sides.

7. This value as an example is calculated when the conditions described in the “Conditions” column are met. Refer to **Note 6** above to calculate the maximum transfer rate under conditions of the customer.

8. Condition in the HS (high-speed main) mode

Caution Select the TTL input buffer for the RxDq pin and the N-ch open drain output (V_{DD} tolerance) mode for the TxDq pin by using port input mode register g (PIMg) and port output mode register g (POMg). For V_{IH} and V_{IL}, see the DC characteristics with TTL input buffer selected.

UART mode connection diagram (during communication at different potential)

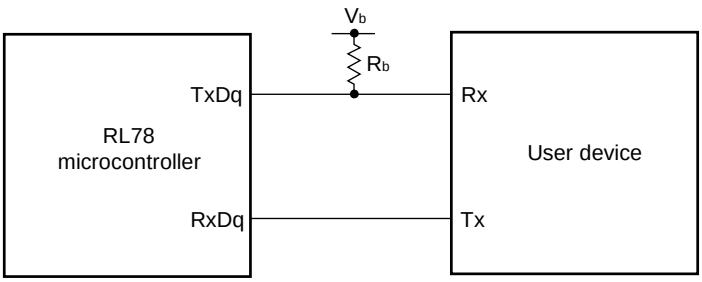

UART mode bit width (during communication at different potential) (reference)

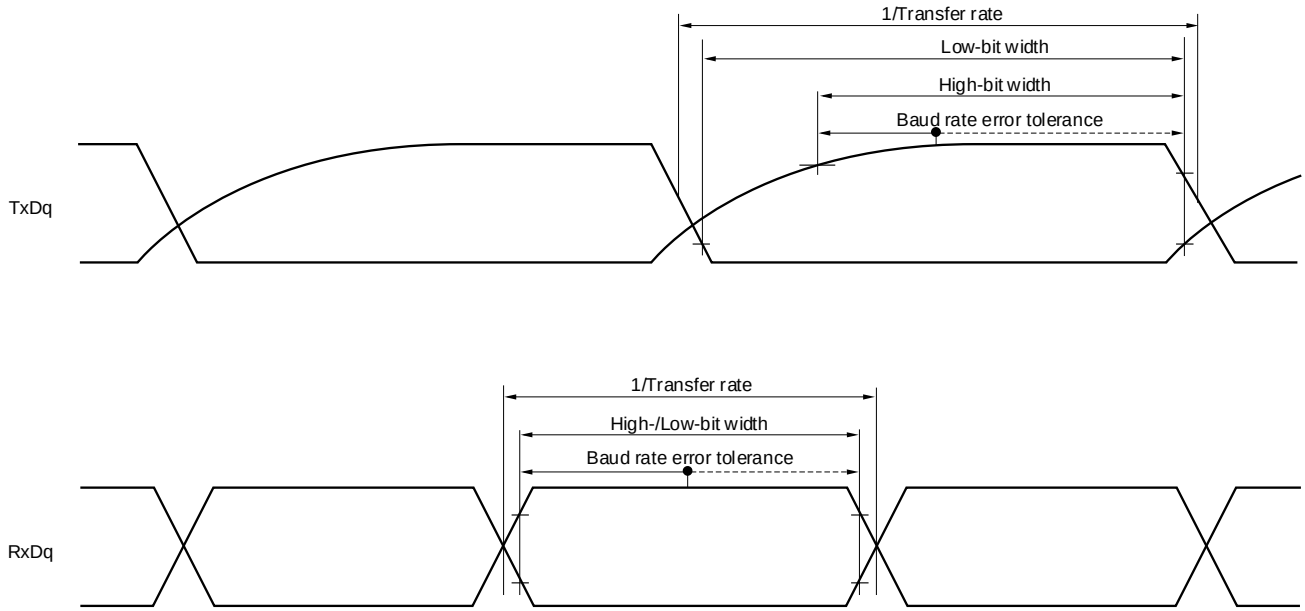

Remarks 1. R_b[Ω]: Communication line (TxDq) pull-up resistance, C_b[F]: Communication line (TxDq) load capacitance, V_b[V]: Communication line voltage

2. q: UART number (q = 0 to 3), g: PIM and POM number (g = 0, 1, 3)

3. f_{MCK}: Serial array unit operation clock frequency
(Operation clock to be set by the CKSmn bit of serial mode register mn (SMRmn).
m: Unit number, n: Channel number (mn = 00 to 03, 10 to 13))

(6) Communication at different potential (2.5 V, 3 V) (Simplified SPI (CSI) mode) (master mode, SCKp... internal clock output, corresponding CSI00 only)
(T_A = –40 to +85°C, 2.7 V ≤ V_{DD} ≤ 5.5 V, V_{SS} = 0 V)

Parameter	Symbol	Conditions		HS (high-speed main) Mode		LS (low-speed main) Mode		LV (low-voltage main) Mode		Unit
				MIN.	MAX.	MIN.	MAX.	MIN.	MAX.	
SCKp cycle time	t_{KCY1}	t_{KCY1} ≥ 2/f_{CLK}	4.0 V ≤ V_{DD} ≤ 5.5 V, 2.7 V ≤ V_b ≤ 4.0 V, C_b = 20 pF, R_b = 1.4 kΩ	200		1150		1150		ns
			2.7 V ≤ V_{DD} < 4.0 V, 2.3 V ≤ V_b ≤ 2.7 V, C_b = 20 pF, R_b = 2.7 kΩ	300		1150		1150		ns
SCKp high-level width	t_{KH1}	4.0 V ≤ V_{DD} ≤ 5.5 V, 2.7 V ≤ V_b ≤ 4.0 V, C_b = 20 pF, R_b = 1.4 kΩ		t_{KCY1}/2 – 50		t_{KCY1}/2 – 50		t_{KCY1}/2 – 50		ns
		2.7 V ≤ V_{DD} < 4.0 V, 2.3 V ≤ V_b ≤ 2.7 V, C_b = 20 pF, R_b = 2.7 kΩ		t_{KCY1}/2 – 120		t_{KCY1}/2 – 120		t_{KCY1}/2 – 120		ns
SCKp low-level width	t_{KL1}	4.0 V ≤ V_{DD} ≤ 5.5 V, 2.7 V ≤ V_b ≤ 4.0 V, C_b = 20 pF, R_b = 1.4 kΩ		t_{KCY1}/2 – 7		t_{KCY1}/2 – 50		t_{KCY1}/2 – 50		ns
		2.7 V ≤ V_{DD} < 4.0 V, 2.3 V ≤ V_b ≤ 2.7 V, C_b = 20 pF, R_b = 2.7 kΩ		t_{KCY1}/2 – 10		t_{KCY1}/2 – 50		t_{KCY1}/2 – 50		ns
SIp setup time (to SCKp↑)Note 1	t_{SIK1}	4.0 V ≤ V_{DD} ≤ 5.5 V, 2.7 V ≤ V_b ≤ 4.0 V, C_b = 20 pF, R_b = 1.4 kΩ		58		479		479		ns
		2.7 V ≤ V_{DD} < 4.0 V, 2.3 V ≤ V_b ≤ 2.7 V, C_b = 20 pF, R_b = 2.7 kΩ		121		479		479		ns
SIp hold time (from SCKp↑)Note 1	t_{KSI1}	4.0 V ≤ V_{DD} ≤ 5.5 V, 2.7 V ≤ V_b ≤ 4.0 V, C_b = 20 pF, R_b = 1.4 kΩ		10		10		10		ns
		2.7 V ≤ V_{DD} < 4.0 V, 2.3 V ≤ V_b ≤ 2.7 V, C_b = 20 pF, R_b = 2.7 kΩ		10		10		10		ns
Delay time from SCKp↓ to SOp outputNote 1	t_{KSO1}	4.0 V ≤ V_{DD} ≤ 5.5 V, 2.7 V ≤ V_b ≤ 4.0 V, C_b = 20 pF, R_b = 1.4 kΩ			60		60		60	ns
		2.7 V ≤ V_{DD} < 4.0 V, 2.3 V ≤ V_b ≤ 2.7 V, C_b = 20 pF, R_b = 2.7 kΩ			130		130		130	ns
SIp setup time (to SCKp↓)Note 2	t_{SIK1}	4.0 V ≤ V_{DD} ≤ 5.5 V, 2.7 V ≤ V_b ≤ 4.0 V, C_b = 20 pF, R_b = 1.4 kΩ		23		110		110		ns
		2.7 V ≤ V_{DD} < 4.0 V, 2.3 V ≤ V_b ≤ 2.7 V, C_b = 20 pF, R_b = 2.7 kΩ		33		110		110		ns
SIp hold time (from SCKp↓)Note 2	t_{KSI1}	4.0 V ≤ V_{DD} ≤ 5.5 V, 2.7 V ≤ V_b ≤ 4.0 V, C_b = 20 pF, R_b = 1.4 kΩ		10		10		10		ns
		2.7 V ≤ V_{DD} < 4.0 V, 2.3 V ≤ V_b ≤ 2.7 V, C_b = 20 pF, R_b = 2.7 kΩ		10		10		10		ns
Delay time from SCKp↑ to SOp outputNote 2	t_{KSO1}	4.0 V ≤ V_{DD} ≤ 5.5 V, 2.7 V ≤ V_b ≤ 4.0 V, C_b = 20 pF, R_b = 1.4 kΩ			10		10		10	ns
		2.7 V ≤ V_{DD} < 4.0 V, 2.3 V ≤ V_b ≤ 2.7 V, C_b = 20 pF, R_b = 2.7 kΩ			10		10		10	ns

(**Notes**, **Caution** and **Remarks** are listed on the next page.)

Notes 1. When DAPmn = 0 and CKPmn = 0, or DAPmn = 1 and CKPmn = 1.

2. When DAPmn = 0 and CKPmn = 1, or DAPmn = 1 and CKPmn = 0.

Caution Select the TTL input buffer for the SIp pin and the N-ch open drain output (V_{DD} tolerance) mode for the SOp pin and SCKp pin by using port input mode register g (PIMg) and port output mode register g (POMg). For V_{IH} and V_{IL}, see the DC characteristics with TTL input buffer selected.

Remarks 1. R_b[Ω]: Communication line (SCKp, SOp) pull-up resistance, C_b[F]: Communication line (SCKp, SOp) load capacitance, V_b[V]: Communication line voltage

2. p: CSI number (p = 00), m: Unit number (m = 0), n: Channel number (n = 0), g: PIM and POM number (g = 1)

3. f_{MCK}: Serial array unit operation clock frequency
(Operation clock to be set by the CKSmn bit of serial mode register mn (SMRmn). m: Unit number, n: Channel number (mn = 00))

4. This specification is valid only when CSI00's peripheral I/O redirect function is not used.

(7) Communication at different potential (1.8 V, 2.5 V, 3 V) (Simplified SPI (CSI) mode) (master mode, SCKp... internal clock output) (1/2)

(T_A = –40 to +85°C, 1.8 V ≤ V_{DD} ≤ 5.5 V, V_{SS} = 0 V)

Parameter	Symbol	Conditions		HS (high-speed main) Mode		LS (low-speed main) Mode		LV (low-voltage main) Mode		Unit
				MIN.	MAX.	MIN.	MAX.	MIN.	MAX.	
SCKp cycle time	t_{KCY1}	t_{KCY1} ≥ 4/f_{CLK}	4.0 V ≤ V_{DD} ≤ 5.5 V, 2.7 V ≤ V_b ≤ 4.0 V, C_b = 30 pF, R_b = 1.4 kΩ	300		1150		1150		ns
			2.7 V ≤ V_{DD} < 4.0 V, 2.3 V ≤ V_b ≤ 2.7 V, C_b = 30 pF, R_b = 2.7 kΩ	500		1150		1150		ns
			1.8 V (2.4 V[Note 1]) ≤ V_{DD} < 3.3 V, 1.6 V ≤ V_b ≤ 1.8 V[Note 2], C_b = 30 pF, R_b = 5.5 kΩ	1150		1150		1150		ns
SCKp high-level width	t_{KH1}	4.0 V ≤ V_{DD} ≤ 5.5 V, 2.7 V ≤ V_b ≤ 4.0 V, C_b = 30 pF, R_b = 1.4 kΩ		t_{KCY1}/2 – 75		t_{KCY1}/2 – 75		t_{KCY1}/2 – 75		ns
		2.7 V ≤ V_{DD} < 4.0 V, 2.3 V ≤ V_b ≤ 2.7 V, C_b = 30 pF, R_b = 2.7 kΩ		t_{KCY1}/2 – 170		t_{KCY1}/2 – 170		t_{KCY1}/2 – 170		ns
		1.8 V (2.4 V[Note 1]) ≤ V_{DD} < 3.3 V, 1.6 V ≤ V_b ≤ 2.0 V[Note 2], C_b = 30 pF, R_b = 5.5 kΩ		t_{KCY1}/2 – 458		t_{KCY1}/2 – 458		t_{KCY1}/2 – 458		ns
SCKp low-level width	t_{KL1}	4.0 V ≤ V_{DD} ≤ 5.5 V, 2.7 V ≤ V_b ≤ 4.0 V, C_b = 30 pF, R_b = 1.4 kΩ		t_{KCY1}/2 – 12		t_{KCY1}/2 – 50		t_{KCY1}/2 – 50		ns
		2.7 V ≤ V_{DD} < 4.0 V, 2.3 V ≤ V_b ≤ 2.7 V, C_b = 30 pF, R_b = 2.7 kΩ		t_{KCY1}/2 – 18		t_{KCY1}/2 – 50		t_{KCY1}/2 – 50		ns
		1.8 V (2.4 V[Note 1]) ≤ V_{DD} < 3.3 V, 1.6 V ≤ V_b ≤ 2.0 V[Note 2], C_b = 30 pF, R_b = 5.5 kΩ		t_{KCY1}/2 – 50		t_{KCY1}/2 – 50		t_{KCY1}/2 – 50		ns
SIp setup time (to SCKp↑)[Note 3]	t_{SIK1}	4.0 V ≤ V_{DD} ≤ 5.5 V, 2.7 V ≤ V_b ≤ 4.0 V, C_b = 30 pF, R_b = 1.4 kΩ		81		479		479		ns
		2.7 V ≤ V_{DD} < 4.0 V, 2.3 V ≤ V_b ≤ 2.7 V, C_b = 30 pF, R_b = 2.7 kΩ		177		479		479		ns
		1.8 V (2.4 V[Note 1]) ≤ V_{DD} < 3.3 V, 1.6 V ≤ V_b ≤ 2.0 V[Note 2], C_b = 30 pF, R_b = 5.5 kΩ		479		479		479		ns
SIp hold time (from SCKp↑)[Note 3]	t_{KSI1}	4.0 V ≤ V_{DD} ≤ 5.5 V, 2.7 V ≤ V_b ≤ 4.0 V, C_b = 30 pF, R_b = 1.4 kΩ		19		19		19		ns
		2.7 V ≤ V_{DD} < 4.0 V, 2.3 V ≤ V_b ≤ 2.7 V, C_b = 30 pF, R_b = 2.7 kΩ		19		19		19		ns
		1.8 V (2.4 V[Note 1]) ≤ V_{DD} < 3.3 V, 1.6 V ≤ V_b ≤ 2.0 V[Note 2], C_b = 30 pF, R_b = 5.5 kΩ		19		19		19		ns
Delay time from SCKp↓ to SOp output[Note 3]	t_{KSO1}	4.0 V ≤ V_{DD} ≤ 5.5 V, 2.7 V ≤ V_b ≤ 4.0 V, C_b = 30 pF, R_b = 1.4 kΩ			100		100		100	ns
		2.7 V ≤ V_{DD} < 4.0 V, 2.3 V ≤ V_b ≤ 2.7 V, C_b = 30 pF, R_b = 2.7 kΩ			195		195		195	ns
		1.8 V (2.4 V[Note 1]) ≤ V_{DD} < 3.3 V, 1.6 V ≤ V_b ≤ 2.0 V[Note 2], C_b = 30 pF, R_b = 5.5 kΩ			483		483		483	ns

(**Notes** and **Caution** are listed on the next page, and **Remarks** are listed on the page after the next page.)

(7) Communication at different potential (1.8 V, 2.5 V, 3 V) (Simplified SPI (CSI) mode) (master mode, SCKp... internal clock output) (2/2)

(T_A = –40 to +85°C, 1.8 V ≤ V_{DD} ≤ 5.5 V, V_{SS} = 0 V)

Parameter	Symbol	Conditions	HS (high-speed main) Mode		LS (low-speed main) Mode		LV (low-voltage main) Mode		Unit
			MIN.	MAX.	MIN.	MAX.	MIN.	MAX.	
SIp setup time (to SCKp↓)Note 4	t_{SIK1}	4.0 V ≤ V_{DD} ≤ 5.5 V, 2.7 V ≤ V_b ≤ 4.0 V, C_b = 30 pF, R_b = 1.4 kΩ	44		110		110		ns
		2.7 V ≤ V_{DD} < 4.0 V, 2.3 V ≤ V_b ≤ 2.7 V, C_b = 30 pF, R_b = 2.7 kΩ	44		110		110		ns
		1.8 V (2.4 VNote 1) ≤ V_{DD} < 3.3 V, 1.6 V ≤ V_b ≤ 2.0 VNote 2, C_b = 30 pF, R_b = 5.5 kΩ	110		110		110		ns
SIp hold time (from SCKp↓)Note 4	t_{KSI1}	4.0 V ≤ V_{DD} ≤ 5.5 V, 2.7 V ≤ V_b ≤ 4.0 V, C_b = 30 pF, R_b = 1.4 kΩ	19		19		19		ns
		2.7 V ≤ V_{DD} < 4.0 V, 2.3 V ≤ V_b ≤ 2.7 V, C_b = 30 pF, R_b = 2.7 kΩ	19		19		19		ns
		1.8 V (2.4 VNote 1) ≤ V_{DD} < 3.3 V, 1.6 V ≤ V_b ≤ 2.0 VNote 2, C_b = 30 pF, R_b = 5.5 kΩ	19		19		19		ns
Delay time from SCKp↑ to SOp outputNote 4	t_{KSO1}	4.0 V ≤ V_{DD} ≤ 5.5 V, 2.7 V ≤ V_b ≤ 4.0 V, C_b = 30 pF, R_b = 1.4 kΩ		25		25		25	ns
		2.7 V ≤ V_{DD} < 4.0 V, 2.3 V ≤ V_b ≤ 2.7 V, C_b = 30 pF, R_b = 2.7 kΩ		25		25		25	ns
		1.8 V (2.4 VNote 1) ≤ V_{DD} < 3.3 V, 1.6 V ≤ V_b ≤ 2.0 VNote 2, C_b = 30 pF, R_b = 5.5 kΩ		25		25		25	ns

Notes 1. Condition in HS (high-speed main) mode

2. Use it with V_{DD} ≥ V_b.

3. When DAPmn = 0 and CKPmn = 0, or DAPmn = 1 and CKPmn = 1.

4. When DAPmn = 0 and CKPmn = 1, or DAPmn = 1 and CKPmn = 0.

Caution Select the TTL input buffer for the SIp pin and the N-ch open drain output (V_{DD} tolerance) mode for the SOp pin and SCKp pin by using port input mode register g (PIMg) and port output mode register g (POMg). For V_{IH} and V_{IL}, see the DC characteristics with TTL input buffer selected.

Simplified SPI (CSI) mode connection diagram (during communication at different potential)

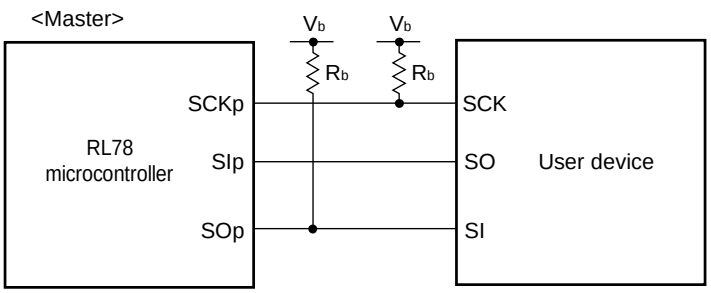

Simplified SPI (CSI) mode serial transfer timing (master mode) (during communication at different potential)
(When DAPmn = 0 and CKPmn = 0, or DAPmn = 1 and CKPmn = 1.)

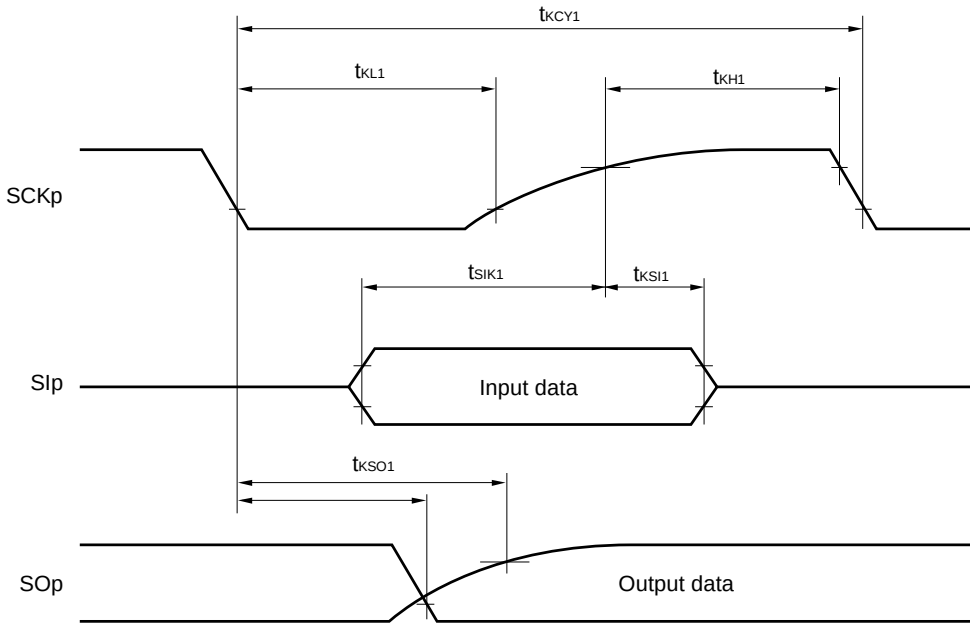

Simplified SPI (CSI) mode serial transfer timing (master mode) (during communication at different potential)
(When DAPmn = 0 and CKPmn = 1, or DAPmn = 1 and CKPmn = 0.)

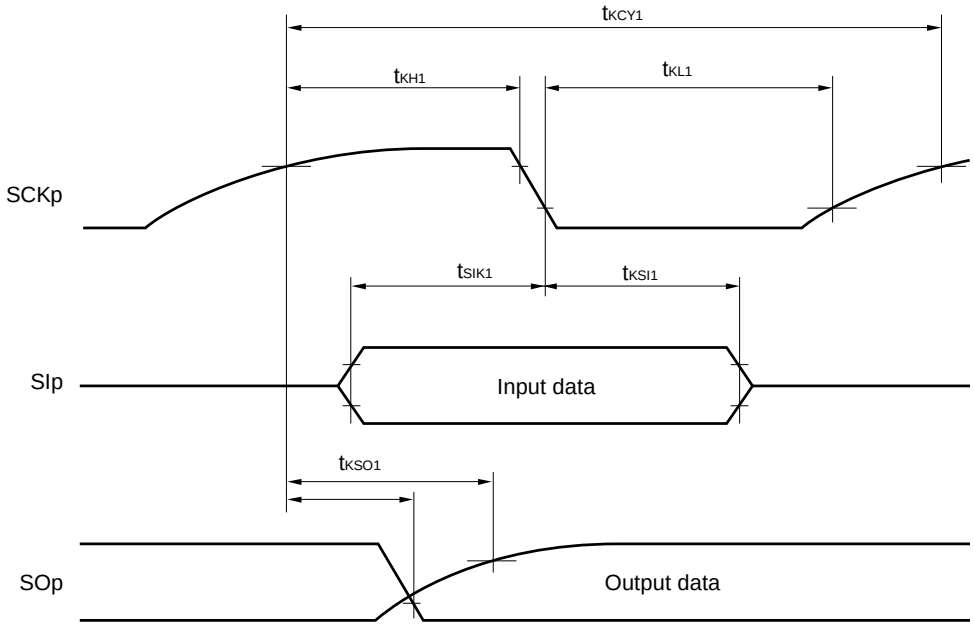

Remarks 1. R_b[Ω]: Communication line (SCKp, SOp) pull-up resistance, C_b[F]: Communication line (SCKp, SOp) load capacitance, V_b[V]: Communication line voltage

2. p: CSI number (p = 00, 10), m: Unit number , n: Channel number (mn = 00, 02),
g: PIM and POM number (g = 0, 1)

3. f_{MCK}: Serial array unit operation clock frequency
(Operation clock to be set by the CKSmn bit of serial mode register mn (SMRmn).
m: Unit number, n: Channel number (mn = 00)

(8) Communication at different potential (1.8 V, 2.5 V, 3 V) (Simplified SPI (CSI) mode) (slave mode, SCKp... external clock input)

(T_A = –40 to +85°C, 1.8 V ≤ V_{DD} ≤ 5.5 V, V_{SS} = 0 V)

Parameter	Symbol	Conditions		HS (high-speed main) Mode		LS (low-speed main) Mode		LV (low-voltage main) Mode		Unit
				MIN.	MAX.	MIN.	MAX.	MIN.	MAX.	
SCKp cycle time[Note 1]	t_{KCY2}	4.0 V ≤ V_{DD} ≤ 5.5 V, 2.7 V ≤ V_b ≤ 4.0 V	20 MHz < f_{MCK}	12/f_{MCK}		–		–		ns
			8 MHz < f_{MCK} ≤ 20 MHz	10/f_{MCK}		–		–		ns
			4 MHz < f_{MCK} ≤ 8 MHz	8/f_{MCK}		16/f_{MCK}		–		ns
			f_{MCK} ≤ 4 MHz	6/f_{MCK}		10/f_{MCK}		10/f_{MCK}		ns
		2.7 V ≤ V_{DD} < 4.0 V, 2.3 V ≤ V_b ≤ 2.7 V	20 MHz < f_{MCK}	16/f_{MCK}		–		–		ns
			16 MHz < f_{MCK} ≤ 20 MHz	14/f_{MCK}		–		–		ns
			8 MHz < f_{MCK} ≤ 16 MHz	12/f_{MCK}		–		–		ns
			4 MHz < f_{MCK} ≤ 8 MHz	8/f_{MCK}		16/f_{MCK}		–		ns
			f_{MCK} ≤ 4 MHz	6/f_{MCK}		10/f_{MCK}		10/f_{MCK}		ns
		1.8 V (2.4 V[Note 2]) ≤ V_{DD} < 3.3 V, 1.6 V ≤ V_b ≤ 2.0 V[Note 3]	20 MHz < f_{MCK}	36/f_{MCK}		–		–		ns
			16 MHz < f_{MCK} ≤ 20 MHz	32/f_{MCK}		–		–		ns
			8 MHz < f_{MCK} ≤ 16 MHz	26/f_{MCK}		–		–		ns
			4 MHz < f_{MCK} ≤ 8 MHz	16/f_{MCK}		16/f_{MCK}		–		ns
			f_{MCK} ≤ 4 MHz	10/f_{MCK}		10/f_{MCK}		10/f_{MCK}		ns
SCKp high-/low-level width	t_{KH2}, t_{KL2}	4.0 V ≤ V_{DD} ≤ 5.5 V, 2.7 V ≤ V_b ≤ 4.0 V		t_{KCY2}/2 – 12		t_{KCY2}/2 – 50		t_{KCY2}/2 – 50		ns
		2.7 V ≤ V_{DD} < 4.0 V, 2.3 V ≤ V_b ≤ 2.7 V		t_{KCY2}/2 – 18		t_{KCY2}/2 – 50		t_{KCY2}/2 – 50		ns
		1.8 V (2.4 V[Note 2]) ≤ V_{DD} < 3.3 V, 1.6 V ≤ V_b ≤ 2.0 V[Note 3]		t_{KCY2}/2 – 50		t_{KCY2}/2 – 50		t_{KCY2}/2 – 50		ns
SIp setup time (to SCKp↑)[Note 4]	t_{SIK2}	4.0 V ≤ V_{DD} ≤ 5.5 V, 2.7 V ≤ V_b ≤ 4.0 V		1/f_{MCK} + 20		1/f_{MCK} + 30		1/f_{MCK} + 30		ns
		2.7 V ≤ V_{DD} < 4.0 V, 2.3 V ≤ V_b ≤ 2.7 V		1/f_{MCK} + 20		1/f_{MCK} + 30		1/f_{MCK} + 30		ns
		1.8 V (2.4 V[Note 2]) ≤ V_{DD} < 3.3 V, 1.6 V ≤ V_b ≤ 2.0 V[Note 3]		1/f_{MCK} + 30		1/f_{MCK} + 30		1/f_{MCK} + 30		ns
SIp hold time (from SCKp↑)[Note 5]	t_{KSI2}	4.0 V ≤ V_{DD} ≤ 5.5 V, 2.7 V ≤ V_b ≤ 4.0 V		1/f_{MCK} + 31		1/f_{MCK} + 31		1/f_{MCK} + 31		ns
		2.7 V ≤ V_{DD} < 4.0 V, 2.3 V ≤ V_b ≤ 2.7 V		1/f_{MCK} + 31		1/f_{MCK} + 31		1/f_{MCK} + 31		ns
		1.8 V (2.4 V[Note 2]) ≤ V_{DD} < 3.3 V, 1.6 V ≤ V_b ≤ 2.0 V[Note 3]		1/f_{MCK} + 31		1/f_{MCK} + 31		1/f_{MCK} + 31		ns
Delay time from SCKp↓ to SOp output[Note 6]	t_{KSO2}	4.0 V ≤ V_{DD} ≤ 5.5 V, 2.7 V ≤ V_b ≤ 4.0 V, C_b = 30 pF, R_b = 1.4 kΩ			2/f_{MCK} + 120		2/f_{MCK} + 573		2/f_{MCK} + 573	ns
		2.7 V ≤ V_{DD} < 4.0 V, 2.3 V ≤ V_b ≤ 2.7 V, C_b = 30 pF, R_b = 2.7 kΩ			2/f_{MCK} + 214		2/f_{MCK} + 573		2/f_{MCK} + 573	ns
		1.8 V (2.4 V[Note 2]) ≤ V_{DD} < 3.3 V, 1.6 V ≤ V_b ≤ 2.0 V[Note 3], C_b = 30 pF, R_b = 5.5 kΩ			2/f_{MCK} + 573		2/f_{MCK} + 573		2/f_{MCK} + 573	ns

(**Notes** and **Caution** are listed on the next page, and **Remarks** are listed on the page after the next page.)

Notes 1. Transfer rate in SNOOZE mode: MAX. 1 Mbps

2. Condition in HS (high-speed main) mode

3. Use it with $V_{DD} \geq V_b$.

4. When DAPmn = 0 and CKPmn = 0, or DAPmn = 1 and CKPmn = 1. The SIp setup time becomes "to SCKp↓" when DAPmn = 0 and CKPmn = 1, or DAPmn = 1 and CKPmn = 0.

5. When DAPmn = 0 and CKPmn = 0, or DAPmn = 1 and CKPmn = 1. The SIp hold time becomes "from SCKp↓" when DAPmn = 0 and CKPmn = 1, or DAPmn = 1 and CKPmn = 0.

6. When DAPmn = 0 and CKPmn = 0, or DAPmn = 1 and CKPmn = 1. The delay time to SOp output becomes "from SCKp↑" when DAPmn = 0 and CKPmn = 1, or DAPmn = 1 and CKPmn = 0.

Caution Select the TTL input buffer for the SIp pin and SCKp pin and the N-ch open drain output (V_{DD} tolerance) mode for the SOp pin by using port input mode register g (PIMg) and port output mode register g (POMg). For V_{IH} and V_{IL}, see the DC characteristics with TTL input buffer selected.

Simplified SPI (CSI) mode connection diagram (during communication at different potential)

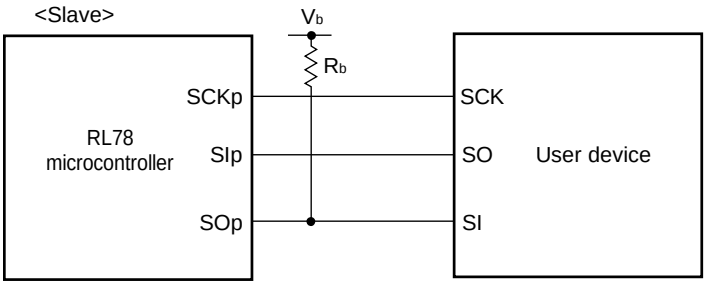

Simplified SPI (CSI) mode serial transfer timing (slave mode) (during communication at different potential)
(When DAPmn = 0 and CKPmn = 0, or DAPmn = 1 and CKPmn = 1.)

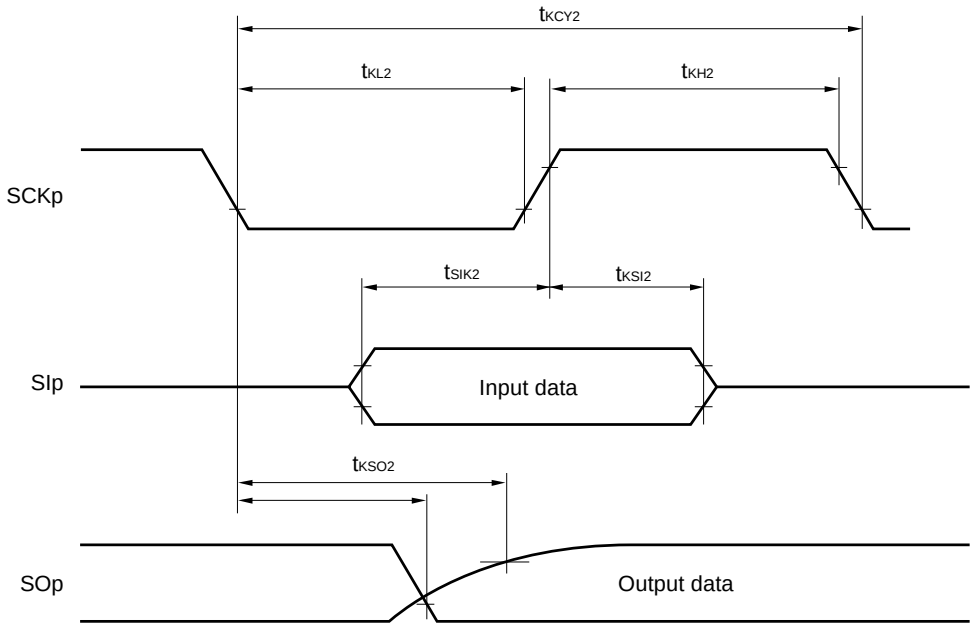

Simplified SPI (CSI) mode serial transfer timing (slave mode) (during communication at different potential)
(When DAPmn = 0 and CKPmn = 1, or DAPmn = 1 and CKPmn = 0.)

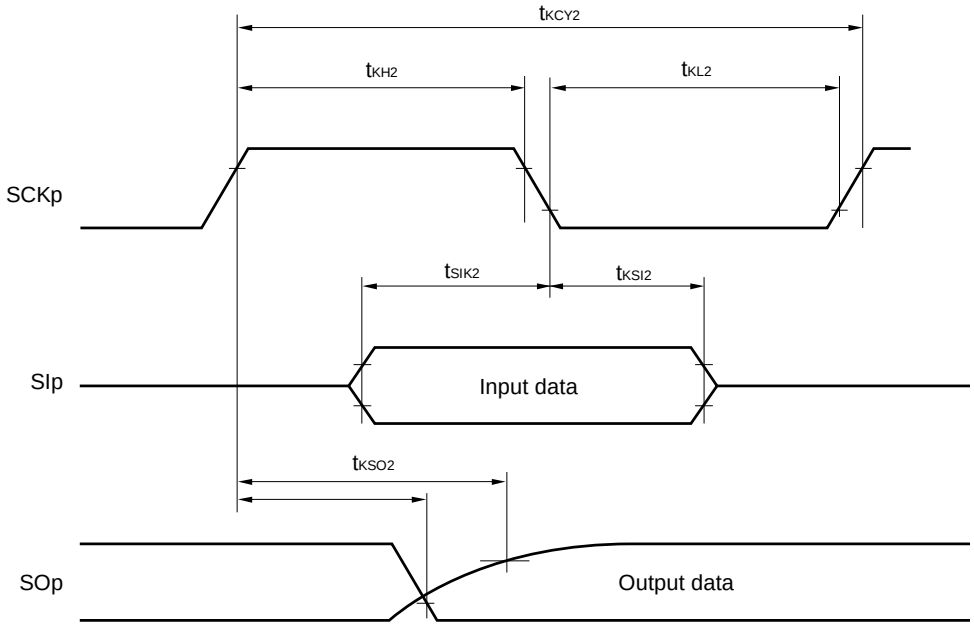

Remarks 1. R_b[Ω]: Communication line (SOp) pull-up resistance, C_b[F]: Communication line (SOp) load capacitance, V_b[V]: Communication line voltage

2. p: CSI number (p = 00, 10), m: Unit number, n: Channel number (mn = 00, 02), g: PIM and POM number (g = 0, 1)

3. f_{MCK}: Serial array unit operation clock frequency
(Operation clock to be set by the CKSmn bit of serial mode register mn (SMRmn)
m: Unit number, n: Channel number (mn = 00, 02))

(9) Communication at different potential (1.8 V, 2.5 V, 3 V) (simplified I²C mode) (1/2)

(T_A = –40 to +85°C, 1.8 V ≤ V_{DD} ≤ 5.5 V, V_{SS} = 0 V)

Parameter	Symbol	Conditions	HS (high-speed main) Mode		LS (low-speed main) Mode		LV (low-voltage main) Mode		Unit
			MIN.	MAX.	MIN.	MAX.	MIN.	MAX.	
SCLr clock frequency	f_{SCL}	4.0 V ≤ V_{DD} ≤ 5.5 V, 2.7 V ≤ V_b ≤ 4.0 V, C_b = 50 pF, R_b = 2.7 kΩ		1000 Note 1		300 Note 1		300 Note 1	kHz
		2.7 V ≤ V_{DD} < 4.0 V, 2.3 V ≤ V_b ≤ 2.7 V, C_b = 50 pF, R_b = 2.7 kΩ		1000 Note 1		300 Note 1		300 Note 1	kHz
		4.0 V ≤ V_{DD} ≤ 5.5 V, 2.7 V ≤ V_b ≤ 4.0 V, C_b = 100 pF, R_b = 2.8 kΩ		400 Note 1		300 Note 1		300 Note 1	kHz
		2.7 V ≤ V_{DD} < 4.0 V, 2.3 V ≤ V_b ≤ 2.7 V, C_b = 100 pF, R_b = 2.7 kΩ		400 Note 1		300 Note 1		300 Note 1	kHz
		1.8 V (2.4 V Note 2) ≤ V_{DD} < 3.3 V, 1.6 V ≤ V_b ≤ 2.0 V Note 3, C_b = 100 pF, R_b = 5.5 kΩ		300 Note 1		300 Note 1		300 Note 1	kHz
Hold time when SCLr = "L"	t_{LOW}	4.0 V ≤ V_{DD} ≤ 5.5 V, 2.7 V ≤ V_b ≤ 4.0 V, C_b = 50 pF, R_b = 2.7 kΩ	475		1550		1550		ns
		2.7 V ≤ V_{DD} < 4.0 V, 2.3 V ≤ V_b ≤ 2.7 V, C_b = 50 pF, R_b = 2.7 kΩ	475		1550		1550		ns
		4.0 V ≤ V_{DD} ≤ 5.5 V, 2.7 V ≤ V_b ≤ 4.0 V, C_b = 100 pF, R_b = 2.8 kΩ	1150		1550		1550		ns
		2.7 V ≤ V_{DD} < 4.0 V, 2.3 V ≤ V_b ≤ 2.7 V, C_b = 100 pF, R_b = 2.7 kΩ	1150		1550		1550		ns
		1.8 V (2.4 V Note 2) ≤ V_{DD} < 3.3 V, 1.6 V ≤ V_b ≤ 2.0 V Note 3, C_b = 100 pF, R_b = 5.5 kΩ	1550		1550		1550		ns
Hold time when SCLr = "H"	t_{HIGH}	4.0 V ≤ V_{DD} ≤ 5.5 V, 2.7 V ≤ V_b ≤ 4.0 V, C_b = 50 pF, R_b = 2.7 kΩ	245		610		610		ns
		2.7 V ≤ V_{DD} < 4.0 V, 2.3 V ≤ V_b ≤ 2.7 V, C_b = 50 pF, R_b = 2.7 kΩ	200		610		610		ns
		4.0 V ≤ V_{DD} ≤ 5.5 V, 2.7 V ≤ V_b ≤ 4.0 V, C_b = 100 pF, R_b = 2.8 kΩ	675		610		610		ns
		2.7 V ≤ V_{DD} < 4.0 V, 2.3 V ≤ V_b ≤ 2.7 V, C_b = 100 pF, R_b = 2.7 kΩ	600		610		610		ns
		1.8 V (2.4 V Note 2) ≤ V_{DD} < 3.3 V, 1.6 V ≤ V_b ≤ 2.0 V Note 3, C_b = 100 pF, R_b = 5.5 kΩ	610		610		610		ns

(**Notes** and **Caution** are listed on the next page, and **Remarks** are listed on the page after the next page.)

(9) Communication at different potential (1.8 V, 2.5 V, 3 V) (simplified I²C mode) (2/2)

(T_A = –40 to +85°C, 1.8 V ≤ V_{DD} ≤ 5.5 V, V_{SS} = 0 V)

Parameter	Symbol	Conditions	HS (high-speed main) Mode		LS (low-speed main) Mode		LV (low-voltage main) Mode		Unit
			MIN.	MAX.	MIN.	MAX.	MIN.	MAX.	
Data setup time (reception)	$t_{SU:DAT}$	4.0 V ≤ V_{DD} ≤ 5.5 V, 2.7 V ≤ V_b ≤ 4.0 V, C_b = 50 pF, R_b = 2.7 kΩ	1/f_{MCK}+ 135[Note 4]		1/f_{MCK}+ 190[Note 4]		1/f_{MCK}+ 190[Note 4]		ns
		2.7 V ≤ V_{DD} < 4.0 V, 2.3 V ≤ V_b ≤ 2.7 V, C_b = 50 pF, R_b = 2.7 kΩ	1/f_{MCK}+ 135[Note 4]		1/f_{MCK}+ 190[Note 4]		1/f_{MCK}+ 190[Note 4]		ns
		4.0 V ≤ V_{DD} ≤ 5.5 V, 2.7 V ≤ V_b ≤ 4.0 V, C_b = 100 pF, R_b = 2.8 kΩ	1/f_{MCK}+ 190[Note 4]		1/f_{MCK}+ 190[Note 4]		1/f_{MCK}+ 190[Note 4]		ns
		2.7 V ≤ V_{DD} < 4.0 V, 2.3 V ≤ V_b ≤ 2.7 V, C_b = 100 pF, R_b = 2.7 kΩ	1/f_{MCK}+ 190[Note 4]		1/f_{MCK}+ 190[Note 4]		1/f_{MCK}+ 190[Note 4]		ns
		1.8 V (2.4 V[Note 2]) ≤ V_{DD} < 3.3 V, 1.6 V ≤ V_b ≤ 2.0 V[Note 3], C_b = 100 pF, R_b = 5.5 kΩ	1/f_{MCK}+ 190[Note 4]		1/f_{MCK}+ 190[Note 4]		1/f_{MCK}+ 190[Note 4]		ns
Data hold time (transmission)	$t_{HD:DAT}$	4.0 V ≤ V_{DD} ≤ 5.5 V, 2.7 V ≤ V_b ≤ 4.0 V, C_b = 50 pF, R_b = 2.7 kΩ	0	305	0	305	0	305	ns
		2.7 V ≤ V_{DD} < 4.0 V, 2.3 V ≤ V_b ≤ 2.7 V, C_b = 50 pF, R_b = 2.7 kΩ	0	305	0	305	0	305	ns
		4.0 V ≤ V_{DD} ≤ 5.5 V, 2.7 V ≤ V_b ≤ 4.0 V, C_b = 100 pF, R_b = 2.8 kΩ	0	355	0	355	0	355	ns
		2.7 V ≤ V_{DD} < 4.0 V, 2.3 V ≤ V_b ≤ 2.7 V, C_b = 100 pF, R_b = 2.7 kΩ	0	355	0	355	0	355	ns
		1.8 V (2.4 V[Note 2]) ≤ V_{DD} < 3.3 V, 1.6 V ≤ V_b ≤ 2.0 V[Note 3], C_b = 100 pF, R_b = 5.5 kΩ	0	405	0	405	0	405	ns

Notes 1. The value must also be equal to or less than f_{MCK}/4.

2. Condition in HS (high-speed main) mode

3. Use it with V_{DD} ≥ V_b.

4. Set the f_{MCK} value to keep the hold time of SCLr = "L" and SCLr = "H".

Caution Select the TTL input buffer and the N-ch open drain output (V_{DD} tolerance) mode for the SDAr pin and the N-ch open drain output (V_{DD} tolerance) mode for the SCLr pin by using port input mode register g (PIMg) and port output mode register g (POMg). For V_{IH} and V_{IL}, see the DC characteristics with TTL input buffer selected.

(**Remarks** are listed on the next page.)

Simplified I²C mode connection diagram (during communication at different potential)

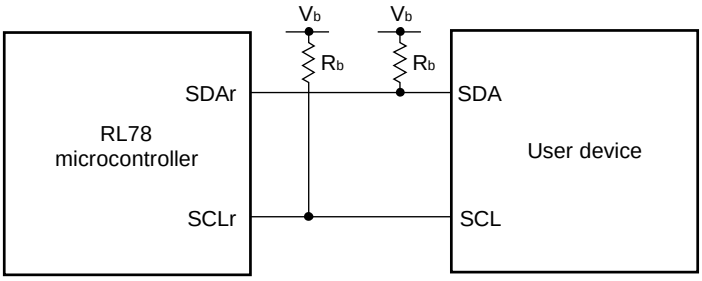

Simplified I²C mode serial transfer timing (during communication at different potential)

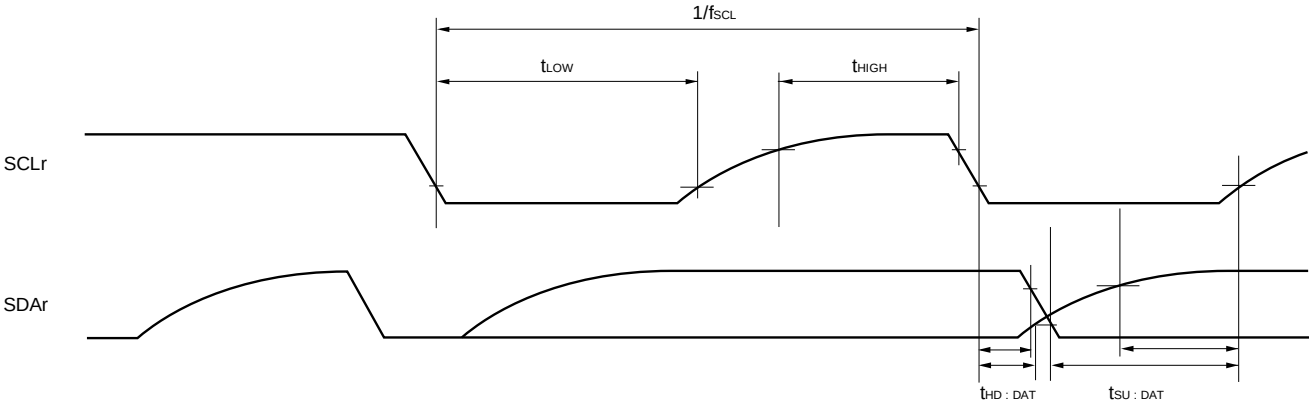

Remarks 1. R_b[Ω]: Communication line (SDAr, SCLr) pull-up resistance, C_b[F]: Communication line (SDAr, SCLr) load capacitance, V_b[V]: Communication line voltage

2. r: IIC number (r = 00, 10), g: PIM, POM number (g = 0, 1)

3. f_{MCK}: Serial array unit operation clock frequency
(Operation clock to be set by the CKSmn bit of serial mode register mn (SMRmn).
m: Unit number, n: Channel number (mn = 00, 02)

32.5.2 Serial interface IICA

(1) I²C standard mode (1/2)

(T_A = –40 to +85°C, 1.6 V ≤ V_{DD} ≤ 5.5 V, V_{SS} = 0 V)

Parameter	Symbol	Conditions		HS (high-speed main) Mode		LS (low-speed main) Mode		LV (low-voltage main) Mode		Unit
				MIN.	MAX.	MIN.	MAX.	MIN.	MAX.	
SCLA0 clock frequency	f_{SCL}	Normal mode: f_{CLK} ≥ 1 MHz	2.7 V ≤ V_{DD} ≤ 5.5 V	0	100	0	100	0	100	kHz
			1.8 V (2.4 V[Note 3]) ≤ V_{DD} ≤ 5.5 V	0	100	0	100	0	100	kHz
			1.6 V ≤ V_{DD} ≤ 5.5 V	–	–	–	–	0	100	kHz
Setup time of restart condition	$t_{SU:STA}$	2.7 V ≤ V_{DD} ≤ 5.5 V		4.7		4.7		4.7		μs
		1.8 V (2.4 V[Note 3]) ≤ V_{DD} ≤ 5.5 V		4.7		4.7		4.7		μs
		1.6 V ≤ V_{DD} ≤ 5.5 V		–	–	–	–	4.7		μs
Hold time[Note 1]	$t_{HD:STA}$	2.7 V ≤ V_{DD} ≤ 5.5 V		4.0		4.0		4.0		μs
		1.8 V (2.4 V[Note 3]) ≤ V_{DD} ≤ 5.5 V		4.0		4.0		4.0		μs
		1.6 V ≤ V_{DD} ≤ 5.5 V		–	–	–	–	4.0		μs
Hold time when SCLA0 = “L”	t_{LOW}	2.7 V ≤ V_{DD} ≤ 5.5 V		4.7		4.7		4.7		μs
		1.8 V (2.4 V[Note 3]) ≤ V_{DD} ≤ 5.5 V		4.7		4.7		4.7		μs
		1.6 V ≤ V_{DD} ≤ 5.5 V		–	–	–	–	4.7		μs
Hold time when SCLA0 = “H”	t_{HIGH}	2.7 V ≤ V_{DD} ≤ 5.5 V		4.0		4.0		4.0		μs
		1.8 V (2.4 V[Note 3]) ≤ V_{DD} ≤ 5.5 V		4.0		4.0		4.0		μs
		1.6 V ≤ V_{DD} ≤ 5.5 V		–	–	–	–	4.0		μs

(**Notes**, **Caution** and **Remark** are listed on the next page.)

(1) I²C standard mode (2/2)

(T_A = –40 to +85°C, 1.6 V ≤ V_{DD} ≤ 5.5 V, V_{SS} = 0 V)

Parameter	Symbol	Conditions	HS (high-speed main) Mode		LS (low-speed main) Mode		LV (low-voltage main) Mode		Unit
			MIN.	MAX.	MIN.	MAX.	MIN.	MAX.	
Data setup time (reception)	$t_{SU:DAT}$	2.7 V ≤ V_{DD} ≤ 5.5 V	250		250		250		ns
		1.8 V (2.4 V[Note 3]) ≤ V_{DD} ≤ 5.5 V	250		250		250		ns
		1.6 V ≤ V_{DD} ≤ 5.5 V	–	–	–	–	250		ns
Data hold time (transmission)[Note 2]	$t_{HD:DAT}$	2.7 V ≤ V_{DD} ≤ 5.5 V	0	3.45	0	3.45	0	3.45	μs
		1.8 V (2.4 V[Note 3]) ≤ V_{DD} ≤ 5.5 V	0	3.45	0	3.45	0	3.45	μs
		1.6 V ≤ V_{DD} ≤ 5.5 V	–	–	–	–	0	3.45	μs
Setup time of stop condition	$t_{SU:STO}$	2.7 V ≤ V_{DD} ≤ 5.5 V	4.0		4.0		4.0		μs
		1.8 V (2.4 V[Note 3]) ≤ V_{DD} ≤ 5.5 V	4.0		4.0		4.0		μs
		1.6 V ≤ V_{DD} ≤ 5.5 V	–	–	–	–	4.0		μs
Bus-free time	t_{BUF}	2.7 V ≤ V_{DD} ≤ 5.5 V	4.7		4.7		4.7		μs
		1.8 V (2.4 V[Note 3]) ≤ V_{DD} ≤ 5.5 V	4.7		4.7		4.7		μs
		1.6 V ≤ V_{DD} ≤ 5.5 V	–	–	–	–	4.7		μs

Notes 1. The first clock pulse is generated after this period when the start/restart condition is detected.

2. The maximum value (MAX.) of $t_{HD:DAT}$ is during normal transfer and a clock stretch state is inserted in the ACK (acknowledge) timing.

3. Condition in HS (high-speed main) mode

Caution The values in the above table are applied even when bit 2 (PIOR2) in the peripheral I/O redirection register (PIOR) is 1. At this time, the pin characteristics (I_{OH1}, I_{OL1}, V_{OH1}, V_{OL1}) must satisfy the values in the redirect destination.

Remark The maximum value of C_b (communication line capacitance) and the value of R_b (communication line pull-up resistor) at that time in each mode are as follows.

Standard mode: C_b = 400 pF, R_b = 2.7 kΩ

(2) I²C fast mode

(T_A = –40 to +85°C, 1.6 V ≤ V_{DD} ≤ 5.5 V, V_{SS} = 0 V)

Parameter	Symbol	Conditions		HS (high-speed main) Mode		LS (low-speed main) Mode		LV (low-voltage main) Mode		Unit
				MIN.	MAX.	MIN.	MAX.	MIN.	MAX.	
SCLA0 clock frequency	f_{SCL}	Fast mode: f_{CLK} ≥ 3.5 MHz	2.7 V ≤ V_{DD} ≤ 5.5 V	0	400	0	400	0	400	kHz
			1.8 V (2.4 V[Note 3]) ≤ V_{DD} ≤ 5.5 V	0	400	0	400	0	400	kHz
Setup time of restart condition	$t_{SU:STA}$	2.7 V ≤ V_{DD} ≤ 5.5 V		0.6		0.6		0.6		μs
		1.8 V (2.4 V[Note 3]) ≤ V_{DD} ≤ 5.5 V		0.6		0.6		0.6		μs
Hold time[Note 1]	$t_{HD:STA}$	2.7 V ≤ V_{DD} ≤ 5.5 V		0.6		0.6		0.6		μs
		1.8 V (2.4 V[Note 3]) ≤ V_{DD} ≤ 5.5 V		0.6		0.6		0.6		μs
Hold time when SCLA0 =“L”	t_{LOW}	2.7 V ≤ V_{DD} ≤ 5.5 V		1.3		1.3		1.3		μs
		1.8 V (2.4 V[Note 3]) ≤ V_{DD} ≤ 5.5 V		1.3		1.3		1.3		μs
Hold time when SCLA0 =“H”	t_{HIGH}	2.7 V ≤ V_{DD} ≤ 5.5 V		0.6		0.6		0.6		μs
		1.8 V (2.4 V[Note 3]) ≤ V_{DD} ≤ 5.5 V		0.6		0.6		0.6		μs
Data setup time (reception)	$t_{SU:DAT}$	2.7 V ≤ V_{DD} ≤ 5.5 V		100		100		100		ns
		1.8 V (2.4 V[Note 3]) ≤ V_{DD} ≤ 5.5 V		100		100		100		ns
Data hold time (transmission)[Note 2]	$t_{HD:DAT}$	2.7 V ≤ V_{DD} ≤ 5.5 V		0	0.9	0	0.9	0	0.9	μs
		1.8 V (2.4 V[Note 3]) ≤ V_{DD} ≤ 5.5 V		0	0.9	0	0.9	0	0.9	μs
Setup time of stop condition	$t_{SU:STO}$	2.7 V ≤ V_{DD} ≤ 5.5 V		0.6		0.6		0.6		μs
		1.8 V (2.4 V[Note 3]) ≤ V_{DD} ≤ 5.5 V		0.6		0.6		0.6		μs
Bus-free time	t_{BUF}	2.7 V ≤ V_{DD} ≤ 5.5 V		1.3		1.3		1.3		μs
		1.8 V (2.4 V[Note 3]) ≤ V_{DD} ≤ 5.5 V		1.3		1.3		1.3		μs

Notes 1. The first clock pulse is generated after this period when the start/restart condition is detected.

2. The maximum value (MAX.) of $t_{HD:DAT}$ is during normal transfer and a clock stretch state is inserted in the ACK (acknowledge) timing.

3. Condition in HS (high-speed main) mode

Caution The values in the above table are applied even when bit 2 (PIOR2) in the peripheral I/O redirection register (PIOR) is 1. At this time, the pin characteristics (I_{OH1}, I_{OL1}, V_{OH1}, V_{OL1}) must satisfy the values in the redirect destination.

Remark The maximum value of C_b (communication line capacitance) and the value of R_b (communication line pull-up resistor) at that time in each mode are as follows.

Fast mode: C_b = 320 pF, R_b = 1.1 kΩ

(3) I²C fast mode plus

(T_A = –40 to +85°C, 1.6 V ≤ V_{DD} ≤ 5.5 V, V_{SS} = 0 V)

Parameter	Symbol	Conditions		HS (high-speed main) Mode		LS (low-speed main) Mode		LV (low-voltage main) Mode		Unit
				MIN.	MAX.	MIN.	MAX.	MIN.	MAX.	
SCLA0 clock frequency	f_{SCL}	Fast mode plus: f_{CLK} ≥ 10 MHz	2.7 V ≤ V_{DD} ≤ 5.5 V	0	1000	–		–		kHz
Setup time of restart condition	$t_{SU:STA}$	2.7 V ≤ V_{DD} ≤ 5.5 V		0.26		–		–		μs
Hold time[Note 1]	$t_{HD:STA}$	2.7 V ≤ V_{DD} ≤ 5.5 V		0.26		–		–		μs
Hold time when SCLA0 =“L”	t_{LOW}	2.7 V ≤ V_{DD} ≤ 5.5 V		0.5		–		–		μs
Hold time when SCLA0 =“H”	t_{HIGH}	2.7 V ≤ V_{DD} ≤ 5.5 V		0.26		–		–		μs
Data setup time (reception)	$t_{SU:DAT}$	2.7 V ≤ V_{DD} ≤ 5.5 V		50		–		–		ns
Data hold time (transmission)[Note 2]	$t_{HD:DAT}$	2.7 V ≤ V_{DD} ≤ 5.5 V		0	0.45	–		–		μs
Setup time of stop condition	$t_{SU:STO}$	2.7 V ≤ V_{DD} ≤ 5.5 V		0.26		–		–		μs
Bus-free time	t_{BUF}	2.7 V ≤ V_{DD} ≤ 5.5 V		0.5		–		–		μs

Notes 1. The first clock pulse is generated after this period when the start/restart condition is detected.

2. The maximum value (MAX.) of $t_{HD:DAT}$ is during normal transfer and a clock stretch state is inserted in the ACK (acknowledge) timing.

Caution The values in the above table are applied even when bit 2 (PIOR2) in the peripheral I/O redirection register (PIOR) is 1. At this time, the pin characteristics (I_{OH1}, I_{OL1}, V_{OH1}, V_{OL1}) must satisfy the values in the redirect destination.

Remark The maximum value of C_b (communication line capacitance) and the value of R_b (communication line pull-up resistor) at that time in each mode are as follows.

Fast mode plus: C_b = 120 pF, R_b = 1.1 kΩ

IICA serial transfer timing

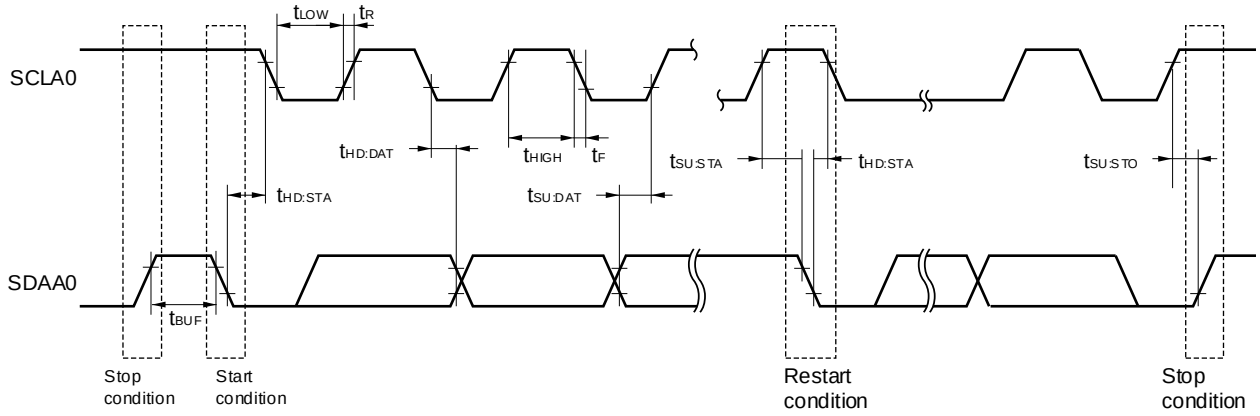

32.6 Analog Characteristics

32.6.1 A/D converter characteristics

Classification of A/D converter characteristics

Reference Voltage / Input channel	Reference voltage (+) = AV_{REFP} Reference voltage (–) = AV_{REFM}	Reference voltage (+) = V_{DD} Reference voltage (–) = V_{SS}	Reference voltage (+) = V_{BGR} Reference voltage (–) = AV_{REFM}
ANI0, ANI1	–	See **32.6.1 (2)**.	See **32.6.1 (3)**.
ANI16 to ANI25	See **32.6.1 (1)**.		
Internal reference voltage Temperature sensor output voltage	See **32.6.1 (1)**.		–

(1) When reference voltage (+) = AV_{REFP}/ANI0 (ADREFP1 = 0, ADREFP0 = 1), reference voltage (–) = AV_{REFM}/ANI1 (ADREFM = 1), target pins: ANI16 to ANI25, internal reference voltage, and temperature sensor output voltage

(T_A = –40 to +85°C, 1.6 V ≤ AV_{REFP} ≤ V_{DD} ≤ 5.5 V, V_{SS} = 0 V, Reference voltage (+) = AV_{REFP}, Reference voltage (–) = AV_{REFM} = 0 V)

Parameter	Symbol	Conditions		MIN.	TYP.	MAX.	Unit
Resolution	RES			8		10	bit
Overall error[Note 1]	AINL	10-bit resolution AV_{REFP} = V_{DD}[Note 3]	1.8 V ≤ AV_{REFP} ≤ 5.5 V		1.2	±5.0	LSB
			1.6 V ≤ AV_{REFP} ≤ 5.5 V[Note 4]		1.2	±8.5	LSB
Conversion time	t_{CONV}	10-bit resolution Target pin: ANI16 to ANI25	3.6 V ≤ V_{DD} ≤ 5.5 V	2.125		39	μs
			2.7 V ≤ V_{DD} ≤ 5.5 V	3.1875		39	μs
			1.8 V ≤ V_{DD} ≤ 5.5 V	17		39	μs
			1.6 V ≤ V_{DD} ≤ 5.5 V	57		95	μs
		10-bit resolution Target pin: Internal reference voltage, and temperature sensor output voltage (HS (high-speed main) mode)	3.6 V ≤ V_{DD} ≤ 5.5 V	2.375		39	μs
			2.7 V ≤ V_{DD} ≤ 5.5 V	3.5625		39	μs
			2.4 V ≤ V_{DD} ≤ 5.5 V	17		39	μs
Zero-scale error[Notes 1, 2]	E_{ZS}	10-bit resolution AV_{REFP} = V_{DD}[Note 3]	1.8 V ≤ AV_{REFP} ≤ 5.5 V			±0.35	%FSR
			1.6 V ≤ AV_{REFP} ≤ 5.5 V[Note 4]			±0.60	%FSR
Full-scale error[Notes 1, 2]	E_{FS}	10-bit resolution AV_{REFP} = V_{DD}[Note 3]	1.8 V ≤ AV_{REFP} ≤ 5.5 V			±0.35	%FSR
			1.6 V ≤ AV_{REFP} ≤ 5.5 V[Note 4]			±0.60	%FSR
Integral linearity error[Note 1]	ILE	10-bit resolution AV_{REFP} = V_{DD}[Note 3]	1.8 V ≤ AV_{REFP} ≤ 5.5 V			±3.5	LSB
			1.6 V ≤ AV_{REFP} ≤ 5.5 V[Note 4]			±6.0	LSB
Differential linearity error[Note 1]	DLE	10-bit resolution AV_{REFP} = V_{DD}[Note 3]	1.8 V ≤ AV_{REFP} ≤ 5.5 V			±2.0	LSB
			1.6 V ≤ AV_{REFP} ≤ 5.5 V[Note 4]			±2.5	LSB
Analog input voltage	V_{AIN}	ANI16 to ANI25		0		AV_{REFP}	V
		Internal reference voltage (2.4 V ≤ V_{DD} ≤ 5.5 V, HS (high-speed main) mode))		V_{BGR}[Note 5]			V
		Temperature sensor output voltage (2.4 V ≤ V_{DD} ≤ 5.5 V, HS (high-speed main) mode))		V_{TMPS25}[Note 5]			V

(**Notes** are listed on the next page.)

Notes 1. Excludes quantization error (±1/2 LSB).

2. This value is indicated as a ratio (%FSR) to the full-scale value.

3. When $AV_{REFP} < V_{DD}$, the MAX. values are as follows.

Overall error:	Add ±4 LSB to the MAX. value when $AV_{REFP} = V_{DD}$.
Zero-scale error/Full-scale error:	Add ±0.2%FSR to the MAX. value when $AV_{REFP} = V_{DD}$.
Integral linearity error/ Differential linearity error:	Add ±2 LSB to the MAX. value when $AV_{REFP} = V_{DD}$.

4. Values when the conversion time is set to 57 μs (min.) and 95 μs (max.).

5. See **32.6.2 Temperature sensor/internal reference voltage characteristics**.

(2) When reference voltage (+) = V_{DD} (ADREFP1 = 0, ADREFP0 = 0), reference voltage (–) = V_{SS} (ADREFM = 0), target pins: ANI0, ANI1, ANI16 to ANI25, internal reference voltage, and temperature sensor output voltage

(T_A = –40 to +85°C, 1.6 V ≤ V_{DD} ≤ 5.5 V, V_{SS} = 0 V, Reference voltage (+) = V_{DD}, Reference voltage (–) = V_{SS})

Parameter	Symbol	Conditions		MIN.	TYP.	MAX.	Unit
Resolution	RES			8		10	bit
Overall error[Notes 1, 2]	AINL	10-bit resolution	1.8 V ≤ V_{DD} ≤ 5.5 V		1.2	±7.0	LSB
			1.6 V ≤ V_{DD} ≤ 5.5 V[Note 3]		1.2	±10.5	LSB
Conversion time	t_{CONV}	10-bit resolution Target pin: ANI0, ANI1, ANI16 to ANI25[Note 3]	3.6 V ≤ V_{DD} ≤ 5.5 V	2.125		39	μs
			2.7 V ≤ V_{DD} ≤ 5.5 V	3.1875		39	μs
			1.8 V ≤ V_{DD} ≤ 5.5 V	17		39	μs
			1.6 V ≤ V_{DD} ≤ 5.5 V	57		95	μs
		10-bit resolution Target pin: Internal reference voltage, and temperature sensor output voltage (HS (high-speed main) mode)	3.6 V ≤ V_{DD} ≤ 5.5 V	2.375		39	μs
			2.7 V ≤ V_{DD} ≤ 5.5 V	3.5625		39	μs
			2.4 V ≤ V_{DD} ≤ 5.5 V	17		39	μs
Zero-scale error[Notes 1, 2]	E_{ZS}	10-bit resolution	1.8 V ≤ V_{DD} ≤ 5.5 V			±0.60	%FSR
			1.6 V ≤ V_{DD} ≤ 5.5 V[Note 3]			±0.85	%FSR
Full-scale error[Notes 1, 2]	E_{FS}	10-bit resolution	1.8 V ≤ V_{DD} ≤ 5.5 V			±0.60	%FSR
			1.6 V ≤ V_{DD} ≤ 5.5 V[Note 3]			±0.85	%FSR
Integral linearity error[Note 1]	ILE	10-bit resolution	1.8 V ≤ V_{DD} ≤ 5.5 V			±4.0	LSB
			1.6 V ≤ V_{DD} ≤ 5.5 V[Note 3]			±6.5	LSB
Differential linearity error[Note 1]	DLE	10-bit resolution	1.8 V ≤ V_{DD} ≤ 5.5 V			±2.0	LSB
			1.6 V ≤ V_{DD} ≤ 5.5 V[Note 3]			±2.5	LSB
Analog input voltage	V_{AIN}	ANI0, ANI1, ANI16 to ANI25		0		V_{DD}	V
		Internal reference voltage (2.4 V ≤ V_{DD} ≤ 5.5 V, HS (high-speed main) mode))		V_{BGR}[Note 4]			V
		Temperature sensor output voltage (2.4 V ≤ V_{DD} ≤ 5.5 V, HS (high-speed main) mode))		V_{TMPS25}[Note 4]			V

Notes 1. Excludes quantization error (±1/2 LSB).

2. This value is indicated as a ratio (%FSR) to the full-scale value.

3. Values when the conversion time is set to 57 μs (min.) and 95 μs (max.).

4. See **32.6.2 Temperature sensor/internal reference voltage characteristics**.

(3) When reference voltage (+) = Internal reference voltage (ADREFP1 = 1, ADREFP0 = 0), reference voltage (–) = AVREFM/ANI1 (ADREFM = 1), target pins: ANI0, ANI16 to ANI25

(T_A = –40 to +85°C, 2.4 V ≤ V_{DD} ≤ 5.5 V, V_{SS} = 0 V, Reference voltage (+) = V_{BGR}[Note 3],
Reference voltage (–) = AV_{REFM}[Note 4] = 0 V, HS (high-speed main) mode)

Parameter	Symbol	Conditions		MIN.	TYP.	MAX.	Unit
Resolution	RES				8		bit
Conversion time	t_{CONV}	8-bit resolution	2.4 V ≤ V_{DD} ≤ 5.5 V	17		39	μs
Zero-scale error[Notes 1, 2]	E_{ZS}	8-bit resolution	2.4 V ≤ V_{DD} ≤ 5.5 V			±0.60	%FSR
Integral linearity error[Note 1]	ILE	8-bit resolution	2.4 V ≤ V_{DD} ≤ 5.5 V			±2.0	LSB
Differential linearity error[Note 1]	DLE	8-bit resolution	2.4 V ≤ V_{DD} ≤ 5.5 V			±1.0	LSB
Analog input voltage	V_{AIN}			0		V_{BGR}[Note 3]	V

Notes 1. Excludes quantization error (±1/2 LSB).
2. This value is indicated as a ratio (%FSR) to the full-scale value.
3. See **32.6.2 Temperature sensor/internal reference voltage characteristics**.
4. When reference voltage (–) = V_{SS}, the MAX. values are as follows.
Zero-scale error: Add ±0.35%FSR to the AV_{REFM} MAX. value.
Integral linearity error: Add ±0.5 LSB to the AV_{REFM} MAX. value.
Differential linearity error: Add ±0.2 LSB to the AV_{REFM} MAX. value.

32.6.2 Temperature sensor /internal reference voltage characteristics

(T_A = –40 to +85°C, 2.4 V ≤ V_{DD} ≤ 5.5 V, V_{SS} = 0 V, HS (high-speed main) mode)

Parameter	Symbol	Conditions	MIN.	TYP.	MAX.	Unit
Temperature sensor output voltage	V_{TMPS25}	ADS register = 80H, T_A = +25°C		1.05		V
Internal reference output voltage	V_{BGR}	ADS register = 81H	1.38	1.45	1.5	V
Temperature coefficient	F_{VTMPS}	Temperature sensor that depends on the temperature		–3.6		mV/°C
Operation stabilization wait time	t_{AMP}				5	μs

32.6.3 Comparator characteristics

(T_A = –40 to +85°C, 1.6 V ≤ V_{DD} ≤ 5.5 V, V_{SS} = 0 V)

Parameter	Symbol	Conditions		MIN.	TYP.	MAX.	Unit
Input voltage range	Ivref			0		V_{DD} – 1.4	V
	Ivcmp			–0.3		V_{DD} + 0.3	V
Output delay	td	V_{DD} = 3.0 V Input slew rate > 50 mV/μs	Comparator high-speed mode, standard mode			1.2	μs
			Comparator high-speed mode, window mode			2.0	μs
			Comparator low-speed mode, standard mode		3.0	5.0	μs
High-electric-potential reference voltage	VTW+	Comparator high-speed mode, window mode		0.66V_{DD}	0.76V_{DD}	0.86V_{DD}	V
Low-electric-potential reference voltage	VTW–	Comparator high-speed mode, window mode		0.14V_{DD}	0.24V_{DD}	0.34V_{DD}	V
Operation stabilization wait time	t_{CMP}			100			μs
Internal reference output voltage[Note]	V_{BGR}	2.4 V ≤ V_{DD} ≤ 5.5 V, HS (high-speed main) mode		1.38	1.45	1.50	V

Note Cannot be used in LS (low-speed main) mode, LV (low-voltage main) mode, subsystem clock operation, and STOP mode.

32.6.4 POR circuit characteristics

(T_A = –40 to +85°C, V_{SS} = 0 V)

Parameter	Symbol	Conditions	MIN.	TYP.	MAX.	Unit
Detection voltage	V_{POR}	The power supply voltage is rising.	1.47	1.51	1.55	V
	V_{PDR}	The power supply voltage is falling.	1.46	1.50	1.54	V
Minimum pulse width[Note]	T_{PW}		300			μs

Note This is the time required for the POR circuit to execute a reset operation when V_{DD} falls below V_{PDR}. When the microcontroller enters STOP mode and when the main system clock (f_{MAIN}) has been stopped by setting bit 0 (HIOSTOP) and bit 7 (MSTOP) of the clock operation status control register (CSC), this is the time required for the POR circuit to execute a reset operation between when V_{DD} falls below 0.7 V and when V_{DD} rises to V_{POR} or higher.

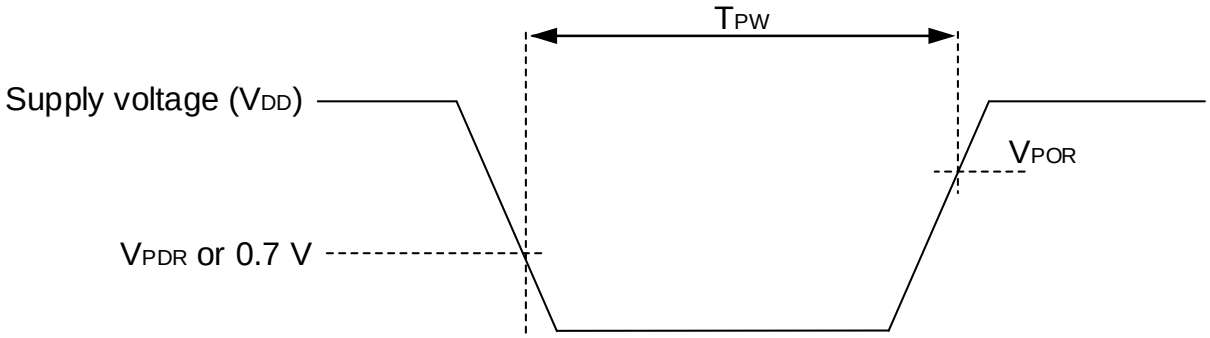

32.6.5 LVD circuit characteristics

LVD Detection Voltage of Reset Mode and Interrupt Mode

(T_A = –40 to +85°C, $V_{PDR} \le V_{DD} \le$ 5.5 V, V_{SS} = 0 V)

Parameter		Symbol	Conditions	MIN.	TYP.	MAX.	Unit
Detection voltage	Supply voltage level	V_{LVD0}	When power supply rises	3.98	4.06	4.14	V
			When power supply falls	3.90	3.98	4.06	V
		V_{LVD1}	When power supply rises	3.68	3.75	3.82	V
			When power supply falls	3.60	3.67	3.74	V
		V_{LVD2}	When power supply rises	3.07	3.13	3.19	V
			When power supply falls	3.00	3.06	3.12	V
		V_{LVD3}	When power supply rises	2.96	3.02	3.08	V
			When power supply falls	2.90	2.96	3.02	V
		V_{LVD4}	When power supply rises	2.86	2.92	2.97	V
			When power supply falls	2.80	2.86	2.91	V
		V_{LVD5}	When power supply rises	2.76	2.81	2.87	V
			When power supply falls	2.70	2.75	2.81	V
		V_{LVD6}	When power supply rises	2.66	2.71	2.76	V
			When power supply falls	2.60	2.65	2.70	V
		V_{LVD7}	When power supply rises	2.56	2.61	2.66	V
			When power supply falls	2.50	2.55	2.60	V
		V_{LVD8}	When power supply rises	2.45	2.50	2.55	V
			When power supply falls	2.40	2.45	2.50	V
		V_{LVD9}	When power supply rises	2.05	2.09	2.13	V
			When power supply falls	2.00	2.04	2.08	V
		V_{LVD10}	When power supply rises	1.94	1.98	2.02	V
			When power supply falls	1.90	1.94	1.98	V
		V_{LVD11}	When power supply rises	1.84	1.88	1.91	V
			When power supply falls	1.80	1.84	1.87	V
		V_{LVD12}	When power supply rises	1.74	1.77	1.81	V
			When power supply falls	1.70	1.73	1.77	V
		V_{LVD13}	When power supply rises	1.64	1.67	1.70	V
			When power supply falls	1.60	1.63	1.66	V
Minimum pulse width		t_{LW}		300			μs
Detection delay time						300	μs

LVD Detection Voltage of Interrupt & Reset Mode

(T_A = –40 to +85°C, $V_{PDR} \le V_{DD} \le$ 5.5 V, V_{SS} = 0 V)

Parameter	Symbol	Conditions			MIN.	TYP.	MAX.	Unit
Interrupt and reset mode	V_{LVD13}	V_{POC2}, V_{POC1}, V_{POC0} = 0, 0, 0, falling reset voltage			1.60	1.63	1.66	V
	V_{LVD12}		LVIS1, LVIS0 = 1, 0	Rising release reset voltage	1.74	1.77	1.81	V
				Falling interrupt voltage	1.70	1.73	1.77	V
	V_{LVD11}		LVIS1, LVIS0 = 0, 1	Rising release reset voltage	1.84	1.88	1.91	V
				Falling interrupt voltage	1.80	1.84	1.87	V
	V_{LVD4}		LVIS1, LVIS0 = 0, 0	Rising release reset voltage	2.86	2.92	2.97	V
				Falling interrupt voltage	2.80	2.86	2.91	V
	V_{LVD11}	V_{POC2}, V_{POC1}, V_{POC0} = 0, 0, 1, falling reset voltage			1.80	1.84	1.87	V
	V_{LVD10}		LVIS1, LVIS0 = 1, 0	Rising release reset voltage	1.94	1.98	2.02	V
				Falling interrupt voltage	1.90	1.94	1.98	V
	V_{LVD9}		LVIS1, LVIS0 = 0, 1	Rising release reset voltage	2.05	2.09	2.13	V
				Falling interrupt voltage	2.00	2.04	2.08	V
	V_{LVD2}		LVIS1, LVIS0 = 0, 0	Rising release reset voltage	3.07	3.13	3.19	V
				Falling interrupt voltage	3.00	3.06	3.12	V
	V_{LVD8}	V_{POC2}, V_{POC1}, V_{POC0} = 0, 1, 0, falling reset voltage			2.40	2.45	2.50	V
	V_{LVD7}		LVIS1, LVIS0 = 1, 0	Rising release reset voltage	2.56	2.61	2.66	V
				Falling interrupt voltage	2.50	2.55	2.60	V
	V_{LVD6}		LVIS1, LVIS0 = 0, 1	Rising release reset voltage	2.66	2.71	2.76	V
				Falling interrupt voltage	2.60	2.65	2.70	V
	V_{LVD1}		LVIS1, LVIS0 = 0, 0	Rising release reset voltage	3.68	3.75	3.82	V
				Falling interrupt voltage	3.60	3.67	3.74	V
	V_{LVD5}	V_{POC2}, V_{POC1}, V_{POC0} = 0, 1, 1, falling reset voltage			2.70	2.75	2.81	V
	V_{LVD4}		LVIS1, LVIS0 = 1, 0	Rising release reset voltage	2.86	2.92	2.97	V
				Falling interrupt voltage	2.80	2.86	2.91	V
	V_{LVD3}		LVIS1, LVIS0 = 0, 1	Rising release reset voltage	2.96	3.02	3.08	V
				Falling interrupt voltage	2.90	2.96	3.02	V
	V_{LVD0}		LVIS1, LVIS0 = 0, 0	Rising release reset voltage	3.98	4.06	4.14	V
				Falling interrupt voltage	3.90	3.98	4.06	V

32.6.6 Supply voltage rising slope characteristics

(T_A = –40 to +85°C, V_{SS} = 0 V)

Parameter	Symbol	Conditions	MIN.	TYP.	MAX.	Unit
V_{DD} rising slope	SV_{DD}				54	V/ms

Caution Make sure to keep the internal reset state by the LVD circuit or an external reset until V_{DD} reaches the operating voltage range shown in 32.4 AC Characteristics.

32.7 LCD Characteristics

32.7.1 External resistance division method

(1) Static display mode

(T_A = –40 to +85°C, V_{L4} (MIN.) ≤ V_{DD} ≤ 5.5 V, V_{SS} = 0 V)

Parameter	Symbol	Conditions	MIN.	TYP.	MAX.	Unit
LCD drive voltage	V_{L4}		2.0		V_{DD}	V

(2) 1/2 bias method, 1/4 bias method

(T_A = –40 to +85°C, V_{L4} (MIN.) ≤ V_{DD} ≤ 5.5 V, V_{SS} = 0 V)

Parameter	Symbol	Conditions	MIN.	TYP.	MAX.	Unit
LCD drive voltage	V_{L4}		2.7		V_{DD}	V

(3) 1/3 bias method

(T_A = –40 to +85°C, V_{L4} (MIN.) ≤ V_{DD} ≤ 5.5 V, V_{SS} = 0 V)

Parameter	Symbol	Conditions	MIN.	TYP.	MAX.	Unit
LCD drive voltage	V_{L4}		2.5		V_{DD}	V

32.7.2 Internal voltage boosting method

(1) 1/3 bias method

(T_A = –40 to +85°C, 1.8 V ≤ V_{DD} ≤ 5.5 V, V_{SS} = 0 V)

Parameter	Symbol	Conditions		MIN.	TYP.	MAX.	Unit
LCD output voltage variation range	V_{L1}	C1 to C4[Note 1] = 0.47 μF[Note 2]	VLCD = 04H	0.90	1.00	1.08	V
			VLCD = 05H	0.95	1.05	1.13	V
			VLCD = 06H	1.00	1.10	1.18	V
			VLCD = 07H	1.05	1.15	1.23	V
			VLCD = 08H	1.10	1.20	1.28	V
			VLCD = 09H	1.15	1.25	1.33	V
			VLCD = 0AH	1.20	1.30	1.38	V
			VLCD = 0BH	1.25	1.35	1.43	V
			VLCD = 0CH	1.30	1.40	1.48	V
			VLCD = 0DH	1.35	1.45	1.53	V
			VLCD = 0EH	1.40	1.50	1.58	V
			VLCD = 0FH	1.45	1.55	1.63	V
			VLCD = 10H	1.50	1.60	1.68	V
			VLCD = 11H	1.55	1.65	1.73	V
			VLCD = 12H	1.60	1.70	1.78	V
			VLCD = 13H	1.65	1.75	1.83	V
Doubler output voltage	V_{L2}	C1 to C4[Note 1] = 0.47 μF		2 V_{L1} – 0.10	2 V_{L1}	2 V_{L1}	V
Tripler output voltage	V_{L4}	C1 to C4[Note 1] = 0.47 μF		3 V_{L1} – 0.15	3 V_{L1}	3 V_{L1}	V
Reference voltage setup time[Note 2]	t_{VWAIT1}			5			ms
Voltage boost wait time[Note 3]	t_{VWAIT2}	C1 to C4[Note 1] = 0.47 μF		500			ms

Notes 1. This is a capacitor that is connected between voltage pins used to drive the LCD.
C1: A capacitor connected between CAPH and CAPL
C2: A capacitor connected between V_{L1} and GND
C3: A capacitor connected between V_{L2} and GND
C4: A capacitor connected between V_{L4} and GND
C1 = C2 = C3 = C4 = 0.47 μF ± 30 %

2. This is the time required to wait from when the reference voltage is specified by using the VLCD register (or when the internal voltage boosting method is selected (by setting the MDSET1 and MDSET0 bits of the LCDM0 register to 01B) if the default value reference voltage is used) until voltage boosting starts (VLCON = 1).

3. This is the wait time from when voltage boosting is started (VLCON = 1) until display is enabled (LCDON = 1).

(2) 1/4 bias method

(T_A = –40 to +85°C, 1.8 V ≤ V_{DD} ≤ 5.5 V, V_{SS} = 0 V)

Parameter	Symbol	Conditions		MIN.	TYP.	MAX.	Unit
LCD output voltage variation range	V_{L1}	C1 to C5[Note 1] = 0.47 μF[Note 2]	VLCD = 04H	0.90	1.00	1.08	V
			VLCD = 05H	0.95	1.05	1.13	V
			VLCD = 06H	1.00	1.10	1.18	V
			VLCD = 07H	1.05	1.15	1.23	V
			VLCD = 08H	1.10	1.20	1.28	V
			VLCD = 09H	1.15	1.25	1.33	V
			VLCD = 0AH	1.20	1.30	1.38	V
Doubler output voltage	V_{L2}	C1 to C5[Note 1] = 0.47 μF		2 V_{L1}–0.08	2 V_{L1}	2 V_{L1}	V
Tripler output voltage	V_{L3}	C1 to C5[Note 1] = 0.47 μF		3 V_{L1}–0.12	3 V_{L1}	3 V_{L1}	V
Quadruply output voltage	V_{L4}	C1 to C5[Note 1] = 0.47 μF		4 V_{L1}–0.16	4 V_{L1}	4 V_{L1}	V
Reference voltage setup time[Note 2]	t_{VWAIT1}			5			ms
Voltage boost wait time[Note 3]	t_{VWAIT2}	C1 to C5[Note 1] = 0.47 μF		500			ms

Notes 1. This is a capacitor that is connected between voltage pins used to drive the LCD.

C1: A capacitor connected between CAPH and CAPL

C2: A capacitor connected between V_{L1} and GND

C3: A capacitor connected between V_{L2} and GND

C4: A capacitor connected between V_{L3} and GND

C5: A capacitor connected between V_{L4} and GND

C1 = C2 = C3 = C4 = C5 = 0.47 μF ± 30%

2. This is the time required to wait from when the reference voltage is specified by using the VLCD register (or when the internal voltage boosting method is selected (by setting the MDSET1 and MDSET0 bits of the LCDM0 register to 01B) if the default value reference voltage is used) until voltage boosting starts (VLCON = 1).

3. This is the wait time from when voltage boosting is started (VLCON = 1) until display is enabled (LCDON = 1).

32.7.3 Capacitor split method

(1) 1/3 bias method

(T_A = –40 to +85°C, 2.2 V ≤ V_{DD} ≤ 5.5 V, V_{SS} = 0 V)

Parameter	Symbol	Conditions	MIN.	TYP.	MAX.	Unit
V_{L4} voltage	V_{L4}	C1 to C4 = 0.47 μF[Note 2]		V_{DD}		V
V_{L2} voltage	V_{L2}	C1 to C4 = 0.47 μF[Note 2]	2/3 V_{L4} – 0.1	2/3 V_{L4}	2/3 V_{L4} + 0.1	V
V_{L1} voltage	V_{L1}	C1 to C4 = 0.47 μF[Note 2]	1/3 V_{L4} – 0.1	1/3 V_{L4}	1/3 V_{L4} + 0.1	V
Capacitor split wait time[Note 1]	t_{VWAIT}		100			ms

Notes 1. This is the wait time from when voltage bucking is started (VLCON = 1) until display is enabled (LCDON = 1).

2. This is a capacitor that is connected between voltage pins used to drive the LCD.

C1: A capacitor connected between CAPH and CAPL

C2: A capacitor connected between V_{L1} and GND

C3: A capacitor connected between V_{L2} and GND

C4: A capacitor connected between V_{L4} and GND

C1 = C2 = C3 = C4 = 0.47 μF ± 30%

32.8 RAM Data Retention Characteristics

(T_A = –40 to +85°C)

Parameter	Symbol	Conditions	MIN.	TYP.	MAX.	Unit
Data retention supply voltage	V_{DDDR}		1.46[Note]		5.5	V

Note This depends on the POR detection voltage. For a falling voltage, data in RAM are retained until the voltage reaches the level that triggers a POR reset but not once it reaches the level at which a POR reset is generated.

Caution Data in RAM are not retained if the CPU operates outside the specified operating voltage range. Therefore, place the CPU in STOP mode before the operating voltage drops below the specified range.

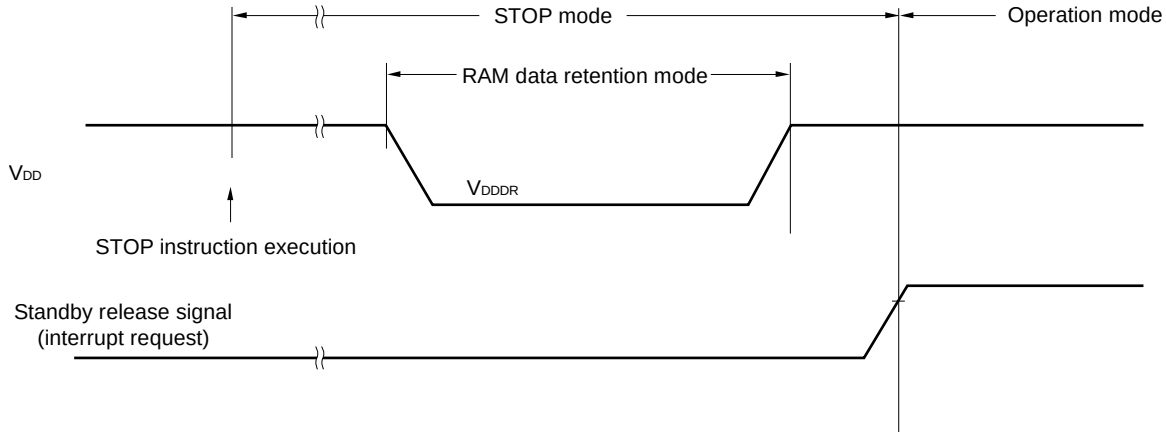

32.9 Flash Memory Programming Characteristics

(T_A = –40 to +85°C, 1.8 V ≤ V_{DD} ≤ 5.5 V, V_{SS} = 0 V)

Parameter	Symbol	Conditions	MIN.	TYP.	MAX.	Unit
System clock frequency	f_{CLK}	1.8 V ≤ V_{DD} ≤ 5.5 V	1		24	MHz
Number of code flash rewrites[Notes 1, 2, 3]	C_{erwr}	Retained for 20 years T_A = 85°C	1,000			Times
Number of data flash rewrites[Notes 1, 2, 3]		Retained for 1 year T_A = 25°C		1,000,000		
		Retained for 5 years T_A = 85°C	100,000			
		Retained for 20 years T_A = 85°C	10,000			

Notes 1. 1 erase + 1 write after the erase is regarded as 1 rewrite. The retaining years are until next rewrite after the rewrite.

2. When using flash memory programmer and Renesas Electronics self programming library

3. This characteristic indicates the flash memory characteristic and based on Renesas Electronics reliability test.

Remark When updating data multiple times, use the flash memory as one for updating data.

32.10 Dedicated Flash Memory Programmer Communication (UART)

(T_A = –40 to +85°C, 1.8 V ≤ V_{DD} ≤ 5.5 V, V_{SS} = 0 V)

Parameter	Symbol		Conditions	MIN.	TYP.	MAX.	Unit
Transfer rate			During serial programming	115,200		1,000,000	bps

32.11 Timing Specifications for Switching Flash Memory Programming Modes

(T_A = –40 to +85°C, 1.8 V ≤ V_{DD} ≤ 5.5 V, V_{SS} = 0 V)

Parameter	Symbol	Conditions	MIN.	TYP.	MAX.	Unit
Time to complete the communication for the initial setting after the external reset is released	t_{SUINIT}	POR and LVD reset must be released before the external reset is released.			100	ms
Time to release the external reset after the TOOL0 pin is set to the low level	t_{SU}	POR and LVD reset must be released before the external reset is released.	10			μs
Time to hold the TOOL0 pin at the low level after the external reset is released (excluding the processing time of the firmware to control the flash memory)	t_{HD}	POR and LVD reset must be released before the external reset is released.	1			ms

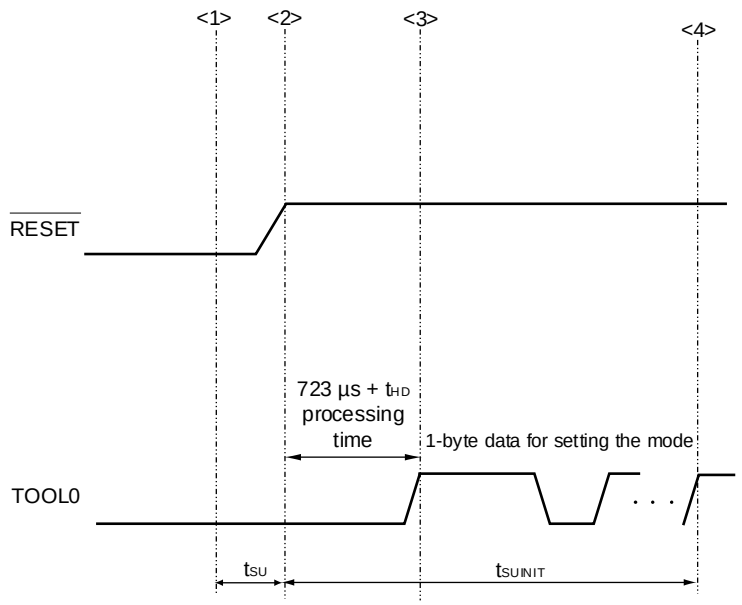

<1> The low level is input to the TOOL0 pin.

<2> The external reset is released (POR and LVD reset must be released before the external reset is released.).

<3> The TOOL0 pin is set to the high level.

<4> Setting of the flash memory programming mode by UART reception and completion the baud rate setting.

Remark t_{SUINIT}: Communication for the initial setting must be completed within 100 ms after the external reset is released during this period.

t_{SU}: Time to release the external reset after the TOOL0 pin is set to the low level

t_{HD}: Time to hold the TOOL0 pin at the low level after the external reset is released (excluding the processing time of the firmware to control the flash memory)

CHAPTER 33 ELECTRICAL SPECIFICATIONS (T_A = –40 to +105°C)

This chapter describes the following electrical specifications.

Target products G: Industrial applications T_A = –40 to +105°C

R5F10WLAGFB, R5F10WLCGFB, R5F10WLDGFB,
R5F10WLEGFB, R5F10WLFGFB, R5F10WLGGFB
R5F10WMAGFB, R5F10WMCGFB, R5F10WMDGFB,
R5F10WMEGFB, R5F10WMFGFB, R5F10WMGGFB

Cautions 1. The RL78/L13 microcontrollers have an on-chip debug function, which is provided for development and evaluation. Do not use the on-chip debug function in products designated for mass production, because the guaranteed number of rewritable times of the flash memory may be exceeded when this function is used, and product reliability therefore cannot be guaranteed. Renesas Electronics is not liable for problems occurring when the on-chip debug function is used.

2. The pins mounted depend on the product. See 2.1 Port Function to 2.2.1 With functions for each product.

3. Consult Renesas salesperson and distributor for derating when the product is used at T_A = +85°C to +105°C. Note that derating means "systematically lowering the load from the rated value to improve reliability".

Remark When RL78/L13 is used in the range of T_A = -40 to +85°C, see **CHAPTER 32 ELECTRICAL SPECIFICATIONS (T_A = -40 to +85°C)**.

"G: Industrial applications (T_A = -40 to +105°C) differ from "A: Consumer applications" in function as follows:

Fields of Application	A: Consumer applications	G: Industrial applications
Operating ambient temperature	T_A = -40 to +85°C	T_A = -40 to +105°C
Operation mode operating voltage range	HS (high-speed main) mode: 2.7 V ≤ V_{DD} ≤ 5.5 V@1 MHz to 24 MHz 2.4 V ≤ V_{DD} ≤ 5.5 V@1 MHz to 16 MHz LS (low-speed main) mode: 1.8 V ≤ V_{DD} ≤ 5.5 V@1 MHz to 8 MHz LV (low-voltage main) mode: 1.6 V ≤ V_{DD} ≤ 5.5 V@1 MHz to 4 MHz	HS (high-speed main) mode only: 2.7 V ≤ V_{DD} ≤ 5.5 V@1 MHz to 24 MHz 2.4 V ≤ V_{DD} ≤ 5.5 V@1 MHz to 16 MHz
High-speed on-chip oscillator clock accuracy	1.8 V ≤ V_{DD} ≤ 5.5 V: ±1.0 % @ T_A = –20 to +85°C ±1.5 % @ T_A = –40 to –20°C 1.6 V ≤ V_{DD} < 1.8 V: ±5.0 % @ T_A = –20 to +85°C ±5.5 % @ T_A = –40 to –20°C	2.4 V ≤ V_{DD} ≤ 5.5 V: ±2.0 % @ T_A = +85 to +105°C ±1.0 % @ T_A = –20 to +85°C ±1.5 % @ T_A = –40 to –20°C
Serial array unit	UART Simplified SPI (CSI): f_{CLK}/2 (16 Mbps supported), f_{CLK}/4 Simplified I^2C	UART Simplified SPI (CSI): f_{CLK}/4 Simplified I^2C
IICA	Standard mode Fast mode Fast mode plus	Standard mode Fase mode
Voltage detector	● Rising: 1.67 V to 4.06 V (14 levels) ● Falling: 1.63 V to 3.98 V (14 levels)	● Rising: 2.61 V to 4.06 V (8 levels) ● Falling: 2.55 V to 3.98 V (8 levels)

Remark Electrical specifications of G: Industrial applications (T_A = –40 to +105°C) differ from "A: Consumer applications". For details, see **33.1** to **33.11** below.

33.1 Absolute Maximum Ratings

Absolute Maximum Ratings (1/3)

Parameter	Symbol	Conditions	Ratings	Unit
Supply voltage	V_{DD}		–0.5 to +6.5	V
REGC pin input voltage	V_{IREGC}	REGC	–0.3 to +2.8 and –0.3 to V_{DD} +0.3[Note 1]	V
Input voltage	V_{I1}	P00 to P07, P10 to P17, P20 to P27, P30 to P35, P40 to P47, P50 to P57, P60, P61, P70 to P77, P121 to P127, P130, P137	–0.3 to V_{DD} +0.3[Note 2]	V
	V_{I2}	P60 and P61 (N-ch open-drain)	–0.3 to +6.5	V
	V_{I3}	EXCLK, EXCLKS, $\overline{\text{RESET}}$	–0.3 to V_{DD} +0.3[Note 2]	V
Output voltage	V_{O1}	P00 to P07, P10 to P17, P20 to P27, P30 to P35, P40 to P47, P50 to P57, P60, P61, P70 to P77, P121 to P127, P130, P137	–0.3 to V_{DD} +0.3[Note 2]	V
Analog input voltage	V_{AI1}	ANI0, ANI1, ANI16 to ANI26	–0.3 to V_{DD} +0.3 and –0.3 to $AV_{REF(+)}$ +0.3[Notes 2, 3]	V

Notes 1. Connect the REGC pin to Vss via a capacitor (0.47 to 1 μF). This value regulates the absolute maximum rating of the REGC pin. Do not use this pin with voltage applied to it.

2. Must be 6.5 V or lower.

3. Do not exceed $AV_{REF(+)}$ + 0.3 V in case of A/D conversion target pin.

Caution Product quality may suffer if the absolute maximum rating is exceeded even momentarily for any parameter. That is, the absolute maximum ratings are rated values at which the product is on the verge of suffering physical damage, and therefore the product must be used under conditions that ensure that the absolute maximum ratings are not exceeded.

Remarks 1. Unless specified otherwise, the characteristics of alternate-function pins are the same as those of the port pins.

2. $AV_{REF(+)}$: + side reference voltage of the A/D converter.

3. V_{SS}: Reference voltage

Absolute Maximum Ratings (2/3)

Parameter	Symbol	Conditions		Ratings	Unit
LCD voltage	V_{L1}	V_{L1} voltage[Note 1]		–0.3 to +2.8 and –0.3 to V_{L4} +0.3	V
	V_{L2}	V_{L2} voltage[Note 1]		–0.3 to V_{L4} +0.3[Note 2]	V
	V_{L3}	V_{L3} voltage[Note 1]		–0.3 to V_{L4} +0.3[Note 2]	V
	V_{L4}	V_{L4} voltage[Note 1]		–0.3 to +6.5	V
	V_{LCAP}	CAPL, CAPH voltage[Note 1]		–0.3 to V_{L4} +0.3[Note 2]	V
	V_{OUT}	COM0 to COM7 SEG0 to SEG50 output voltage	External resistance division method	–0.3 to V_{DD} +0.3[Note 2]	V
			Capacitor split method	–0.3 to V_{DD} +0.3[Note 2]	V
			Internal voltage boosting method	–0.3 to V_{L4} +0.3[Note 2]	V

Notes 1. This value only indicates the absolute maximum ratings when applying voltage to the V_{L1}, V_{L2}, V_{L3}, and V_{L4} pins; it does not mean that applying voltage to these pins is recommended. When using the internal voltage boosting method or capacitance split method, connect these pins to V_{SS} via a capacitor (0.47 µF ± 30%) and connect a capacitor (0.47 µF ± 30%) between the CAPL and CAPH pins.

2. Must be 6.5 V or lower.

Caution Product quality may suffer if the absolute maximum rating is exceeded even momentarily for any parameter. That is, the absolute maximum ratings are rated values at which the product is on the verge of suffering physical damage, and therefore the product must be used under conditions that ensure that the absolute maximum ratings are not exceeded.

Remark V_{SS}: Reference voltage

Absolute Maximum Ratings (T_A = 25°C) (3/3)

Parameter	Symbol	Conditions		Ratings	Unit
Output current, high	I_{OH1}	Per pin	P00 to P07, P10 to P17, P22 to P27, P30 to P35, P40 to P47, P50 to P57, P60, P61, P70 to P77, P125 to P127, P130	–40	mA
		Total of all pins –170 mA	P00 to P07, P10 to P17, P22 to P27, P30 to P35, P40 to P47, P50 to P57, P60, P61, P70 to P77, P125 to P127, P130	–170	mA
	I_{OH2}	Per pin	P20, P21	–0.5	mA
		Total of all pins		–1	mA
Output current, low	I_{OL1}	Per pin	P00 to P07, P10 to P17, P22 to P27, P30 to P35, P40 to P47, P50 to P57, P60, P61, P70 to P77, P125 to P127, P130	40	mA
		Total of all pins 170 mA	P40 to P47, P130	70	mA
			P00 to P07, P10 to P17, P22 to P27, P30 to P35, P50 to P57, P60, P61, P70 to P77, P125 to P127	100	mA
	I_{OL2}	Per pin	P20, P21	1	mA
		Total of all pins		2	mA
Operating ambient temperature	T_A	In normal operation mode		–40 to +105	°C
		In flash memory programming mode			°C
Storage temperature	T_{stg}			–65 to +150	°C

Caution Product quality may suffer if the absolute maximum rating is exceeded even momentarily for any parameter. That is, the absolute maximum ratings are rated values at which the product is on the verge of suffering physical damage, and therefore the product must be used under conditions that ensure that the absolute maximum ratings are not exceeded.

Remark Unless specified otherwise, the characteristics of alternate-function pins are the same as those of the port pins.

33.2 Oscillator Characteristics

33.2.1 X1 and XT1 oscillator characteristics

(T_A = –40 to +105°C, 2.4 V ≤ V_{DD} ≤ 5.5 V, V_{SS} = 0 V)

Parameter	Resonator	Conditions	MIN.	TYP.	MAX.	Unit
X1 clock oscillation frequency (f_X)Note	Ceramic resonator/ crystal resonator	2.7 V ≤ V_{DD} ≤ 5.5 V	1.0		20.0	MHz
		2.4 V ≤ V_{DD} < 2.7 V	1.0		16.0	
XT1 clock oscillation frequency (f_{XT})Note	Crystal resonator		32	32.768	35	kHz

Note Indicates only permissible oscillator frequency ranges. Refer to **AC Characteristics** for instruction execution time. Request evaluation by the manufacturer of the oscillator circuit mounted on a board to check the oscillator characteristics.

Caution Since the CPU is started by the high-speed on-chip oscillator clock after a reset release, check the X1 clock oscillation stabilization time using the oscillation stabilization time counter status register (OSTC) by the user. Determine the oscillation stabilization time of the OSTC register and the oscillation stabilization time select register (OSTS) after sufficiently evaluating the oscillation stabilization time with the resonator to be used.

Remark When using the X1 oscillator and XT1 oscillator, see **5.4 System Clock Oscillator**.

33.2.2 On-chip oscillator characteristics

(T_A = –40 to +105°C, 2.4 V ≤ V_{DD} ≤ 5.5 V, V_{SS} = 0 V)

Parameter	Symbol	Conditions		MIN.	TYP.	MAX.	Unit
High-speed on-chip oscillator clock frequency[Notes 1, 2]	f_{IH}			1		24	MHz
High-speed on-chip oscillator clock frequency accuracy		+85 to +105°C	2.4 V ≤ V_{DD} ≤ 5.5 V	–2		+2	%
		–20 to +85°C	2.4 V ≤ V_{DD} ≤ 5.5 V	–1		+1	%
		–40 to –20°C	2.4 V ≤ V_{DD} ≤ 5.5 V	–1.5		+1.5	%
Low-speed on-chip oscillator clock frequency	f_{IL}				15		kHz
Low-speed on-chip oscillator clock frequency accuracy				–15		+15	%

Notes 1. The high-speed on-chip oscillator frequency is selected by bits 0 to 4 of the option byte (000C2H/010C2H) and bits 0 to 2 of the HOCODIV register.

2. This indicates the oscillator characteristics only. Refer to **AC Characteristics** for the instruction execution time.

33.3 DC Characteristics

33.3.1 Pin characteristics

(T_A = –40 to +105°C, 2.4 V ≤ V_{DD} ≤ 5.5 V, V_{SS} = 0 V)

Parameter	Symbol	Conditions		MIN.	TYP.	MAX.	Unit
Output current, high[Note 1]	I_{OH1}	Per pin for P00 to P07, P10 to P17, P22 to P27, P30 to P35, P40 to P47, P50 to P57, P70 to P77, P125 to P127, P130	2.4 V ≤ V_{DD} ≤ 5.5 V			–3.0[Note 2]	mA
		Total of P00 to P07, P10 to P17, P22 to P27, P30 to P35, P40 to P47, P50 to P57, P70 to P77, P125 to P127, P130 (When duty = 70%[Note 3])	4.0 V ≤ V_{DD} ≤ 5.5 V			–45.0	mA
			2.7 V ≤ V_{DD} < 4.0 V			–15.0	mA
			2.4 V ≤ V_{DD} < 2.7 V			–7.0	mA
	I_{OH2}	Per pin for P20 and P21	2.4 V ≤ V_{DD} ≤ 5.5 V			–0.1[Note 2]	mA
		Total of all pins (When duty = 70%[Note 3])	2.4 V ≤ V_{DD} ≤ 5.5 V			–0.2	mA

Notes 1. Value of the current at which the device operation is guaranteed even if the current flows from the V_{DD} pin to an output pin

2. Do not exceed the total current value.

3. Output current value under conditions where the duty factor ≤ 70%.

The output current value that has changed to the duty factor > 70% the duty ratio can be calculated with the following expression (when changing the duty factor from 70% to n%).

- Total output current of pins = (I_{OH} × 0.7)/(n × 0.01)

<Example> Where n = 80% and I_{OH} = –45.0 mA

Total output current of pins = (–45.0 × 0.7)/(80 × 0.01) = –39.375 mA

However, the current that is allowed to flow into one pin does not vary depending on the duty factor. A current higher than the absolute maximum rating must not flow into one pin.

Caution P00, P04 to P07, P16, P17, P35, P42 to P44, P46, P47, P53 to P56, and P130 do not output high level in N-ch open-drain mode.

Remark Unless specified otherwise, the characteristics of alternate-function pins are the same as those of the port pins.

(T_A = –40 to +105°C, 2.4 V ≤ V_{DD} ≤ 5.5 V, V_{SS} = 0 V)

Parameter	Symbol	Conditions		MIN.	TYP.	MAX.	Unit
Output current, low[Note 1]	I_{OL1}	Per pin for P00 to P07, P10 to P17, P22 to P27, P30 to P35, P40 to P47, P50 to P57, P70 to P77, P125 to P127, P130				8.5[Note 2]	mA
		Per pin for P60 and P61				15.0[Note 2]	mA
		Total of P40 to P47, P130 (When duty = 70%[Note 3])	4.0 V ≤ V_{DD} ≤ 5.5 V			40.0	mA
			2.7 V ≤ V_{DD} < 4.0 V			15.0	mA
			2.4 V ≤ V_{DD} < 2.7 V			9.0	mA
		Total of P00 to P07, P10 to P17, P22 to P27, P30 to P35, P50 to P57, P70 to P77, P125 to P127 (When duty = 70%[Note 3])	4.0 V ≤ V_{DD} ≤ 5.5 V			60.0	mA
			2.7 V ≤ V_{DD} < 4.0 V			35.0	mA
			2.4 V ≤ V_{DD} < 2.7 V			20.0	mA
		Total of all pins (When duty = 70%[Note 3])				100.0	mA
	I_{OL2}	Per pin for P20 and P21				0.4[Note 2]	mA
		Total of all pins (When duty = 70%[Note 3])	2.4 V ≤ V_{DD} ≤ 5.5 V			0.8	mA

Notes 1. Value of the current at which the device operation is guaranteed even if the current flows from an output pin to the V_{SS} pin

2. Do not exceed the total current value.

3. Output current value under conditions where the duty factor ≤ 70%.

The output current value that has changed to the duty factor > 70% the duty ratio can be calculated with the following expression (when changing the duty factor from 70% to n%).

- Total output current of pins = (I_{OL} × 0.7)/(n × 0.01)

<Example> Where n = 80% and I_{OL} = 40.0 mA

Total output current of pins = (40.0 × 0.7)/(80 × 0.01) = 35.0 mA

However, the current that is allowed to flow into one pin does not vary depending on the duty factor. A current higher than the absolute maximum rating must not flow into one pin.

Remark Unless specified otherwise, the characteristics of alternate-function pins are the same as those of the port pins.

(T_A = –40 to +105°C, 2.4 V ≤ V_{DD} ≤ 5.5 V, V_{SS} = 0 V)

Parameter	Symbol	Conditions		MIN.	TYP.	MAX.	Unit
Input voltage, high	V_{IH1}	P00 to P07, P10 to P17, P22 to P27, P30 to P35, P40 to P47, P50 to P57, P70 to P77, P125 to P127, P130, P137	Normal input buffer	0.8V_{DD}		V_{DD}	V
	V_{IH2}	P03, P05, P06, P16, P17, P34, P43, P44, P46, P47, P53, P55	TTL input buffer 4.0 V ≤ V_{DD} ≤ 5.5 V	2.2		V_{DD}	V
			TTL input buffer 3.3 V ≤ V_{DD} < 4.0 V	2.0		V_{DD}	V
			TTL input buffer 2.4 V ≤ V_{DD} < 3.3 V	1.5		V_{DD}	V
	V_{IH3}	P20, P21		0.7V_{DD}		V_{DD}	V
	V_{IH4}	P60, P61		0.7V_{DD}		6.0	V
	V_{IH5}	P121 to P124, P137, EXCLK, EXCLKS, $\overline{\text{RESET}}$		0.8V_{DD}		V_{DD}	V
Input voltage, low	V_{IL1}	P00 to P07, P10 to P17, P22 to P27, P30 to P35, P40 to P47, P50 to P57, P70 to P77, P125 to P127, P130, P137	Normal input buffer	0		0.2V_{DD}	V
	V_{IL2}	P03, P05, P06, P16, P17, P34, P43, P44, P46, P47, P53, P55	TTL input buffer 4.0 V ≤ V_{DD} ≤ 5.5 V	0		0.8	V
			TTL input buffer 3.3 V ≤ V_{DD} < 4.0 V	0		0.5	V
			TTL input buffer 2.4 V ≤ V_{DD} < 3.3 V	0		0.32	V
	V_{IL3}	P20, P21		0		0.3V_{DD}	V
	V_{IL4}	P60, P61		0		0.3V_{DD}	V
	V_{IL5}	P121 to P124, P137, EXCLK, EXCLKS, $\overline{\text{RESET}}$		0		0.2V_{DD}	V

Caution The maximum value of V_{IH} of pins P00, P04 to P07, P16, P17, P35, P42 to P44, P46, P47, P53 to P56, and P130 is V_{DD}, even in the N-ch open-drain mode.

Remark Unless specified otherwise, the characteristics of alternate-function pins are the same as those of the port pins.

(T_A = –40 to +105°C, 2.4 V ≤ V_{DD} ≤ 5.5 V, V_{SS} = 0 V)

Parameter	Symbol	Conditions		MIN.	TYP.	MAX.	Unit
Output voltage, high	V_{OH1}	P00 to P07, P10 to P17, P22 to P27, P30 to P35, P40 to P47, P50 to P57, P70 to P77, P125 to P127, P130	4.0 V ≤ V_{DD} ≤ 5.5 V, I_{OH1} = –3.0 mA	V_{DD} – 0.7			V
			2.7 V ≤ V_{DD} ≤ 5.5 V, I_{OH1} = –2.0 mA	V_{DD} – 0.6			V
			2.4 V ≤ V_{DD} ≤ 5.5 V, I_{OH1} = –1.5 mA	V_{DD} – 0.5			V
	V_{OH2}	P20 and P21	2.4 V ≤ V_{DD} ≤ 5.5 V, I_{OH2} = –100 µA	V_{DD} – 0.5			V
Output voltage, low	V_{OL1}	P00 to P07, P10 to P17, P22 to P27, P30 to P35, P40 to P47, P50 to P57, P70 to P77, P125 to P127, P130	4.0 V ≤ V_{DD} ≤ 5.5 V, I_{OL1} = 8.5 mA			0.7	V
			2.7 V ≤ V_{DD} ≤ 5.5 V, I_{OL1} = 3.0 mA			0.6	V
			2.7 V ≤ V_{DD} ≤ 5.5 V, I_{OL1} = 1.5 mA			0.4	V
			2.4 V ≤ V_{DD} ≤ 5.5 V, I_{OL1} = 0.6 mA			0.4	V
	V_{OL2}	P20 and P21	2.4 V ≤ V_{DD} ≤ 5.5 V, I_{OL2} = 400 µA			0.4	V
	V_{OL3}	P60 and P61	4.0 V ≤ V_{DD} ≤ 5.5 V, I_{OL3} = 15.0 mA			2.0	V
			4.0 V ≤ V_{DD} ≤ 5.5 V, I_{OL3} = 5.0 mA			0.4	V
			2.7 V ≤ V_{DD} ≤ 5.5 V, I_{OL3} = 3.0 mA			0.4	V
			2.4 V ≤ V_{DD} ≤ 5.5 V, I_{OL3} = 2.0 mA			0.4	V

Caution P00, P04 to P07, P16, P17, P35, P42 to P44, P46, P47, P53 to P56, and P130 do not output high level in N-ch open-drain mode.

Remark Unless specified otherwise, the characteristics of alternate-function pins are the same as those of the port pins.

(T_A = –40 to +105°C, 2.4 V ≤ V_{DD} ≤ 5.5 V, V_{SS} = 0 V)

Parameter	Symbol	Conditions			MIN.	TYP.	MAX.	Unit
Input leakage current, high	I_{LIH1}	P00 to P07, P10 to P17, P22 to P27, P30 to P35, P40 to P47, P50 to P57, P70 to P77, P125 to P127, P130, P137	$V_I = V_{DD}$				1	μA
	I_{LIH2}	P20 and P21, $\overline{\text{RESET}}$	$V_I = V_{DD}$				1	μA
	I_{LIH3}	P121 to P124 (X1, X2, XT1, XT2, EXCLK, EXCLKS)	$V_I = V_{DD}$	In input port mode and when external clock is input			1	μA
				Resonator connected			10	μA
Input leakage current, low	I_{LIL1}	P00 to P07, P10 to P17, P22 to P27, P30 to P35, P40 to P47, P50 to P57, P70 to P77, P125 to P127, P130, P137	$V_I = V_{SS}$				–1	μA
	I_{LIL2}	P20 and P21, $\overline{\text{RESET}}$	$V_I = V_{SS}$				–1	μA
	I_{LIL3}	P121 to P124 (X1, X2, XT1, XT2, EXCLK, EXCLKS)	$V_I = V_{SS}$	In input port mode and when external clock is input			–1	μA
				Resonator connected			–10	μA
On-chip pull-up resistance	R_{U1}	P00 to P07, P10 to P17, P22 to P27, P30 to P35, P45 to P47, P50 to P57, P70 to P77, P125 to P127, P130	$V_I = V_{SS}$		10	20	100	kΩ
	R_{U2}	P40 to P44	$V_I = V_{SS}$		10	20	100	kΩ

Remark Unless specified otherwise, the characteristics of alternate-function pins are the same as those of the port pins.

33.3.2 Supply current characteristics

(T_A = –40 to +105°C, 2.4 V ≤ V_{DD} ≤ 5.5 V, V_{SS} = 0 V) (1/2)

Parameter	Symbol	Conditions					MIN.	TYP.	MAX.	Unit
Supply current	I_{DD1} Note 1	Operating mode	HS (high-speed main) mode Note 5	f_{HOCO} = 48 MHz Note 3, f_{IH} = 24 MHz Note 3	Basic operation	V_{DD} = 5.0 V		2.0		mA
						V_{DD} = 3.0 V		2.0		mA
					Normal operation	V_{DD} = 5.0 V		3.8	7.0	mA
						V_{DD} = 3.0 V		3.8	7.0	mA
				f_{HOCO} = 24 MHz Note 3, f_{IH} = 24 MHz Note 3	Basic operation	V_{DD} = 5.0 V		1.7		mA
						V_{DD} = 3.0 V		1.7		mA
					Normal operation	V_{DD} = 5.0 V		3.6	6.5	mA
						V_{DD} = 3.0 V		3.6	6.5	mA
				f_{HOCO} = 16 MHz Note 3, f_{IH} = 16 MHz Note 3	Normal operation	V_{DD} = 5.0 V		2.7	5.0	mA
						V_{DD} = 3.0 V		2.7	5.0	mA
			HS (high-speed main) mode Note 5	f_{MX} = 20 MHz Note 2, V_{DD} = 5.0 V	Normal operation	Square wave input		3.0	5.4	mA
						Resonator connection		3.2	5.6	mA
				f_{MX} = 20 MHz Note 2, V_{DD} = 3.0 V	Normal operation	Square wave input		2.9	5.4	mA
						Resonator connection		3.2	5.6	mA
				f_{MX} = 10 MHz Note 2, V_{DD} = 5.0 V	Normal operation	Square wave input		1.9	3.2	mA
						Resonator connection		1.9	3.2	mA
				f_{MX} = 10 MHz Note 2, V_{DD} = 3.0 V	Normal operation	Square wave input		1.9	3.2	mA
						Resonator connection		1.9	3.2	mA
			Subsystem clock operation	f_{SUB} = 32.768 kHz Note 4, T_A = –40°C	Normal operation	Square wave input		4.0	5.4	μA
						Resonator connection		4.3	5.4	μA
				f_{SUB} = 32.768 kHz Note 4, T_A = +25°C	Normal operation	Square wave input		4.0	5.4	μA
						Resonator connection		4.3	5.4	μA
				f_{SUB} = 32.768 kHz Note 4, T_A = +50°C	Normal operation	Square wave input		4.1	7.1	μA
						Resonator connection		4.4	7.1	μA
				f_{SUB} = 32.768 kHz Note 4, T_A = +70°C	Normal operation	Square wave input		4.3	8.7	μA
						Resonator connection		4.7	8.7	μA
				f_{SUB} = 32.768 kHz Note 4, T_A = +85°C	Normal operation	Square wave input		4.7	12.0	μA
						Resonator connection		5.2	12.0	μA
				f_{SUB} = 32.768 kHz Note 4, T_A = +105°C	Normal operation	Square wave input		6.4	35.0	μA
						Resonator connection		6.6	35.0	μA

(**Notes** and **Remarks** are listed on the next page.)

Notes 1. Total current flowing into V_{DD}, including the input leakage current flowing when the level of the input pin is fixed
<R> to V_{DD} or V_{SS}. The following points apply in the HS (high-speed main) mode.

- The currents in the "TYP." column do not include the operating currents of the peripheral modules.
- The currents in the "MAX." column include the operating currents of the peripheral modules, except for those flowing into the LCD controller/driver, A/D converter, LVD circuit, comparator, I/O port, and on-chip pull-up/pull-down resistors, and those flowing while the data flash memory is being rewritten.

In the subsystem clock operation, the currents in both the "TYP." and "MAX." columns do not include the operating currents of the peripheral modules. However, in HALT mode, including the current flowing into the real-time clock 2.

2. When high-speed on-chip oscillator and subsystem clock are stopped.

3. When high-speed system clock and subsystem clock are stopped.

4. When high-speed on-chip oscillator and high-speed system clock are stopped. When setting ultra-low power
<R> consumption oscillation (AMPHS1 = 1).

5. Relationship between operation voltage width, operation frequency of CPU and operation mode is as below.

HS (high-speed main) mode: 2.7 V ≤ V_{DD} ≤ 5.5 V@1 MHz to 24 MHz
2.4 V ≤ V_{DD} ≤ 5.5 V@1 MHz to 16 MHz

Remarks 1. f_{MX}: High-speed system clock frequency (X1 clock oscillation frequency or external main system clock frequency)

2. f_{HOCO}: High-speed on-chip oscillator clock frequency (48 MHz max.)

3. f_{IH}: High-speed on-chip oscillator clock frequency (24 MHz max.)

4. f_{SUB}: Subsystem clock frequency (XT1 clock oscillation frequency)

5. Except subsystem clock operation, temperature condition of the TYP. value is T_A = 25°C

(T_A = –40 to +105°C, 2.4 V ≤ V_{DD} ≤ 5.5 V, V_{SS} = 0 V) (2/2)

Parameter	Symbol	Conditions				MIN.	TYP.	MAX.	Unit
Supply current Note 1	I_{DD2} Note 2	HALT mode	HS (high-speed main) mode Note 6	f_{HOCO} = 48 MHz Note 4, f_{IH} = 24 MHz Note 4	V_{DD} = 5.0 V		0.71	2.55	mA
					V_{DD} = 3.0 V		0.71	2.55	mA
				f_{HOCO} = 24 MHz Note 4, f_{IH} = 24 MHz Note 4	V_{DD} = 5.0 V		0.49	1.95	mA
					V_{DD} = 3.0 V		0.49	1.95	mA
				f_{HOCO} = 16 MHz Note 4, f_{IH} = 16 MHz Note 4	V_{DD} = 5.0 V		0.43	1.50	mA
					V_{DD} = 3.0 V		0.43	1.50	mA
			HS (high-speed main) mode Note 6	f_{MX} = 20 MHz Note 3, V_{DD} = 5.0 V	Square wave input		0.31	1.76	mA
					Resonator connection		0.48	1.92	mA
				f_{MX} = 20 MHz Note 3, V_{DD} = 3.0 V	Square wave input		0.29	1.76	mA
					Resonator connection		0.48	1.92	mA
				f_{MX} = 10 MHz Note 3, V_{DD} = 5.0 V	Square wave input		0.20	0.96	mA
					Resonator connection		0.28	1.07	mA
				f_{MX} = 10 MHz Note 3, V_{DD} = 3.0 V	Square wave input		0.19	0.96	mA
					Resonator connection		0.28	1.07	mA
			Subsystem clock operation	f_{SUB} = 32.768 kHz Note 5, T_A = –40°C	Square wave input		0.34	0.62	μA
					Resonator connection		0.51	0.80	μA
				f_{SUB} = 32.768 kHz Note 5, T_A = +25°C	Square wave input		0.38	0.62	μA
					Resonator connection		0.57	0.80	μA
				f_{SUB} = 32.768 kHz Note 5, T_A = +50°C	Square wave input		0.46	2.30	μA
					Resonator connection		0.67	2.49	μA
				f_{SUB} = 32.768 kHz Note 5, T_A = +70°C	Square wave input		0.65	4.03	μA
					Resonator connection		0.91	4.22	μA
				f_{SUB} = 32.768 kHz Note 5, T_A = +85°C	Square wave input		1.00	8.04	μA
					Resonator connection		1.31	8.23	μA
				f_{SUB} = 32.768 kHz Note 5, T_A = +105°C	Square wave input		3.05	27.00	μA
					Resonator connection		3.24	27.00	μA
	I_{DD3}	STOP mode Note 7	T_A = –40°C				0.18	0.52	μA
			T_A = +25°C				0.24	0.52	μA
			T_A = +50°C				0.33	2.21	μA
			T_A = +70°C				0.53	3.94	μA
			T_A = +85°C				0.93	7.95	μA
			T_A = +105°C				2.91	25.00	μA

(**Notes** and **Remarks** are listed on the next page.)

Notes 1. Total current flowing into V_{DD}, including the input leakage current flowing when the level of the input pin is fixed
<R> to V_{DD} or V_{SS}. The following points apply in the HS (high-speed main) mode.

- The currents in the "TYP." column do not include the operating currents of the peripheral modules
- The currents in the "MAX." column include the operating currents of the peripheral modules, except for those flowing into the LCD controller/driver, A/D converter, LVD circuit, comparator, I/O port, and on-chip pull-up/pull-down resistors, and those flowing while the data flash memory is being rewritten.

In the subsystem clock operation, the currents in both the "TYP." and "MAX." columns do not include the operating currents of the peripheral modules. However, in HALT mode, including the current flowing into the real-time clock 2.

In the STOP mode, the currents in both the "TYP." and "MAX." columns do not include the operating currents of the peripheral modules.

2. During HALT instruction execution by flash memory.

3. When high-speed on-chip oscillator and subsystem clock are stopped.

4. When high-speed system clock and subsystem clock are stopped.

5. When high-speed on-chip oscillator and high-speed system clock are stopped.
<R> When RTCLPC = 1 and setting ultra-low current consumption (AMPHS1 = 1).

6. Relationship between operation voltage width, operation frequency of CPU and operation mode is as below.

HS (high-speed main) mode: 2.7 V ≤ V_{DD} ≤ 5.5 V@1 MHz to 24 MHz
2.4 V ≤ V_{DD} ≤ 5.5 V@1 MHz to 16 MHz

7. Regarding the value for current to operate the subsystem clock in STOP mode, refer to that in HALT mode.

Remarks 1. f_{MX}: High-speed system clock frequency (X1 clock oscillation frequency or external main system clock frequency)

2. f_{HOCO}: High-speed on-chip oscillator clock frequency (48 MHz max.)

3. f_{IH}: High-speed on-chip oscillator clock frequency (24 MHz max.)

4. f_{SUB}: Subsystem clock frequency (XT1 clock oscillation frequency)

5. Except subsystem clock operation and STOP mode, temperature condition of the TYP. value is T_A = 25°C

(T_A = –40 to +105°C, 2.4 V ≤ V_{DD} ≤ 5.5 V, V_{SS} = 0 V)

Parameter	Symbol	Conditions				MIN.	TYP.	MAX.	Unit
Low-speed on-chip oscillator operating current	I_{FIL} Note 1						0.20		μA
RTC2 operating current	I_{RTC} Notes 1, 2, 3	f_{SUB} = 32.768 kHz					0.02		μA
12-bit interval timer operating current	I_{TMKA} Notes 1, 2, 4						0.04		μA
Watchdog timer operating current	I_{WDT} Notes 1, 2, 5	f_{IL} = 15 kHz					0.22		μA
A/D converter operating current	I_{ADC} Notes 1, 6	When conversion at maximum speed	Normal mode, AV_{REFP} = V_{DD} = 5.0 V				1.3	1.7	mA
			Low voltage mode, AV_{REFP} = V_{DD} = 3.0 V				0.5	0.7	mA
A/D converter reference voltage current	I_{ADREF} Note 1						75.0		μA
Temperature sensor operating current	I_{TMPS} Note 1						75.0		μA
LVD operating current	I_{LVD} Notes 1, 7						0.08		μA
Comparator operating current	I_{CMP} Notes 1, 11	V_{DD} = 5.0 V, Regulator output voltage = 2.1 V	Window mode				12.5		μA
			Comparator high-speed mode				6.5		μA
			Comparator low-speed mode				1.7		μA
		V_{DD} = 5.0 V, Regulator output voltage = 1.8 V	Window mode				8.0		μA
			Comparator high-speed mode				4.0		μA
			Comparator low-speed mode				1.3		μA
Self-programming operating current	I_{FSP} Notes 1, 9						2.00	12.20	mA
BGO operating current	I_{BGO} Notes 1, 8						2.00	12.20	mA
SNOOZE operating current	I_{SNOZ} Note 1	ADC operation	While the mode is shifting Note 10				0.50	0.60	mA
			During A/D conversion, in low voltage mode, AV_{REFP} = V_{DD} = 3.0 V				1.20	1.44	mA
		Simplified SPI (Simplified SPI (CSI))/UART operation					0.70	0.84	mA
LCD operating current	I_{LCD1} Notes 1, 12, 13	External resistance division method	f_{LCD} = f_{SUB} LCD clock = 128 Hz	1/3 bias, four time slices	V_{DD} = 5.0 V, V_{L4} = 5.0 V		0.04	0.20.	μA
	I_{LCD2} Note 1, 12	Internal voltage boosting method	f_{LCD} = f_{SUB} LCD clock = 128 Hz	1/3 bias, four time slices	V_{DD} = 3.0 V, V_{L4} = 3.0 V (V_{LCD} = 04H)		0.85	2.20	μA
					V_{DD} = 5.0 V, V_{L4} = 5.1 V (V_{LCD} = 12H)		1.55	3.70	μA
	I_{LCD3} Note 1, 12	Capacitor split method	f_{LCD} = f_{SUB} LCD clock = 128 Hz	1/3 bias, four time slices	V_{DD} = 3.0 V, V_{L4} = 3.0 V		0.20	0.50	μA

(**Notes** and **Remarks** are listed on the next page.)

Notes 1. Current flowing to V_{DD}.

2. When high speed on-chip oscillator and high-speed system clock are stopped.

3. Current flowing only to the real-time clock 2 (excluding the operating current of the low-speed on-chip oscillator and the XT1 oscillator). The value of the current for the RL78 microcontrollers is the sum of the values of either I_{DD1} or I_{DD2}, and I_{RTC}, when the real-time clock 2 operates in operation mode or HALT mode. When the low-speed on-chip oscillator is selected, I_{FIL} should be added. I_{DD2} subsystem clock operation includes the operational current of real-time clock 2.

4. Current flowing only to the 12-bit interval timer (excluding the operating current of the low-speed on-chip oscillator and the XT1 oscillator). The value of the current for the RL78 microcontrollers is the sum of the values of either I_{DD1} or I_{DD2}, and I_{TMKA}, when the 12-bit interval timer operates in operation mode or HALT mode. When the low-speed on-chip oscillator is selected, I_{FIL} should be added.

5. Current flowing only to the watchdog timer (including the operating current of the low-speed on-chip oscillator). The current value of the RL78 microcontrollers is the sum of I_{DD1}, I_{DD2} or I_{DD3} and I_{WDT} when the watchdog timer operates.

6. Current flowing only to the A/D converter. The current value of the RL78 microcontrollers is the sum of I_{DD1} or I_{DD2} and I_{ADC} when the A/D converter operates in an operation mode or the HALT mode.

7. Current flowing only to the LVD circuit. The current value of the RL78 microcontrollers is the sum of I_{DD1}, I_{DD2} or I_{DD3} and I_{LVD} when the LVD circuit operates.

8. Current flowing only during data flash rewrite.

9. Current flowing only during self programming.

10. For shift time to the SNOOZE mode, see **21.3.3 SNOOZE mode**.

11. Current flowing only to the comparator circuit. The current value of the RL78 microcontrollers is the sum of I_{DD1}, I_{DD2} or I_{DD3} and I_{CMP} when the comparator circuit operates.

12. Current flowing only to the LCD controller/driver. The value of the current for the RL78 microcontrollers is the sum of the supply current (I_{DD1} or I_{DD2}) and LCD operating current (I_{LCD1}, I_{LCD2}, or I_{LCD3}), when the LCD controller/driver operates in operation mode or HALT mode. However, not including the current flowing into the LCD panel. Conditions of the TYP. value and MAX. value are as follows.

- Setting 20 pins as the segment function and blinking all
- Selecting f_{SUB} for system clock when LCD clock = 128 Hz (LCDC0 = 07H)
- Setting four time slices and 1/3 bias

13. Not including the current flowing into the external division resistor when using the external resistance division method.

Remarks 1. f_{IL}: Low-speed on-chip oscillator clock frequency

2. f_{SUB}: Subsystem clock frequency (XT1 clock oscillation frequency)

3. f_{CLK}: CPU/peripheral hardware clock frequency

4. The temperature condition for the TYP. value is T_A = 25°C.

33.4 AC Characteristics

(T_A = –40 to +105°C, 2.4 V ≤ V_{DD} ≤ 5.5 V, V_{SS} = 0 V)

Parameter	Symbol	Conditions			MIN.	TYP.	MAX.	Unit
Instruction cycle (minimum instruction execution time)	T_{CY}	Main system clock (f_{MAIN}) operation	HS (high-speed main) mode	2.7 V ≤ V_{DD} ≤ 5.5 V	0.0417		1	μs
				2.4 V ≤ V_{DD} < 2.7 V	0.0625		1	μs
		Subsystem clock (f_{SUB}) operation		2.4 V ≤ V_{DD} ≤ 5.5 V	28.5	30.5	31.3	μs
		In the self programming mode	HS (high-speed main) mode	2.7 V ≤ V_{DD} ≤ 5.5 V	0.0417		1	μs
				2.4 V ≤ V_{DD} < 2.7 V	0.0625		1	μs
External system clock frequency	f_{EX}	2.7 V ≤ V_{DD} ≤ 5.5 V			1.0		20.0	MHz
		2.4 V ≤ V_{DD} < 2.7 V			1.0		16.0	MHz
	f_{EXS}				32		35	kHz
External system clock input high-level width, low-level width	t_{EXH}, t_{EXL}	2.7 V ≤ V_{DD} ≤ 5.5 V			24			ns
		2.4 V ≤ V_{DD} < 2.7 V			30			ns
	t_{EXHS}, t_{EXLS}				13.7			μs
TI00 to TI07 input high-level width, low-level width	t_{TIH}, t_{TIL}				1/f_{MCK}+10			ns
TO00 to TO07, TKBO00[Note], TKBO01-0 to TKBO01-2[Note] output frequency	f_{TO}	HS (high-speed main) mode	4.0 V ≤ V_{DD} ≤ 5.5 V				12	MHz
			2.7 V ≤ V_{DD} < 4.0 V				8	MHz
			2.4 V ≤ V_{DD} < 2.7 V				4	MHz
PCLBUZ0, PCLBUZ1 output frequency	f_{PCL}	HS (high-speed main) mode	4.0 V ≤ V_{DD} ≤ 5.5 V				16	MHz
			2.7 V ≤ V_{DD} < 4.0 V				8	MHz
			2.4 V ≤ V_{DD} < 2.7 V				4	MHz
Interrupt input high-level width, low-level width	t_{INTH}, t_{INTL}	INTP0 to INTP7	2.4 V ≤ V_{DD} ≤ 5.5 V		1			μs
Key interrupt input high-level width, low-level width	t_{KRH}, t_{KRL}	KR0 to KR7	2.4 V ≤ V_{DD} ≤ 5.5 V		250			ns
IH-PWM output restart input high-level width	t_{IHR}	INTP0 to INTP7			2			f_{CLK}
TMKB2 forced output stop input high-level width	t_{IHR}	INTP0 to INTP2			2			f_{CLK}
$\overline{\text{RESET}}$ low-level width	t_{RSL}				10			μs

(**Note** and **Remark** are listed on the next page.)

Note Specification under conditions where the duty factor is 50%.

Remark f_{MCK}: Timer array unit operation clock frequency
(Operation clock to be set by the CKSmn0, CKSmn1 bits of timer mode register mn (TMRmn)
m: Unit number (m = 0), n: Channel number (n = 0 to 7))

Minimum Instruction Execution Time during Main System Clock Operation

T_{CY} vs V_{DD} (HS (high-speed main) mode)

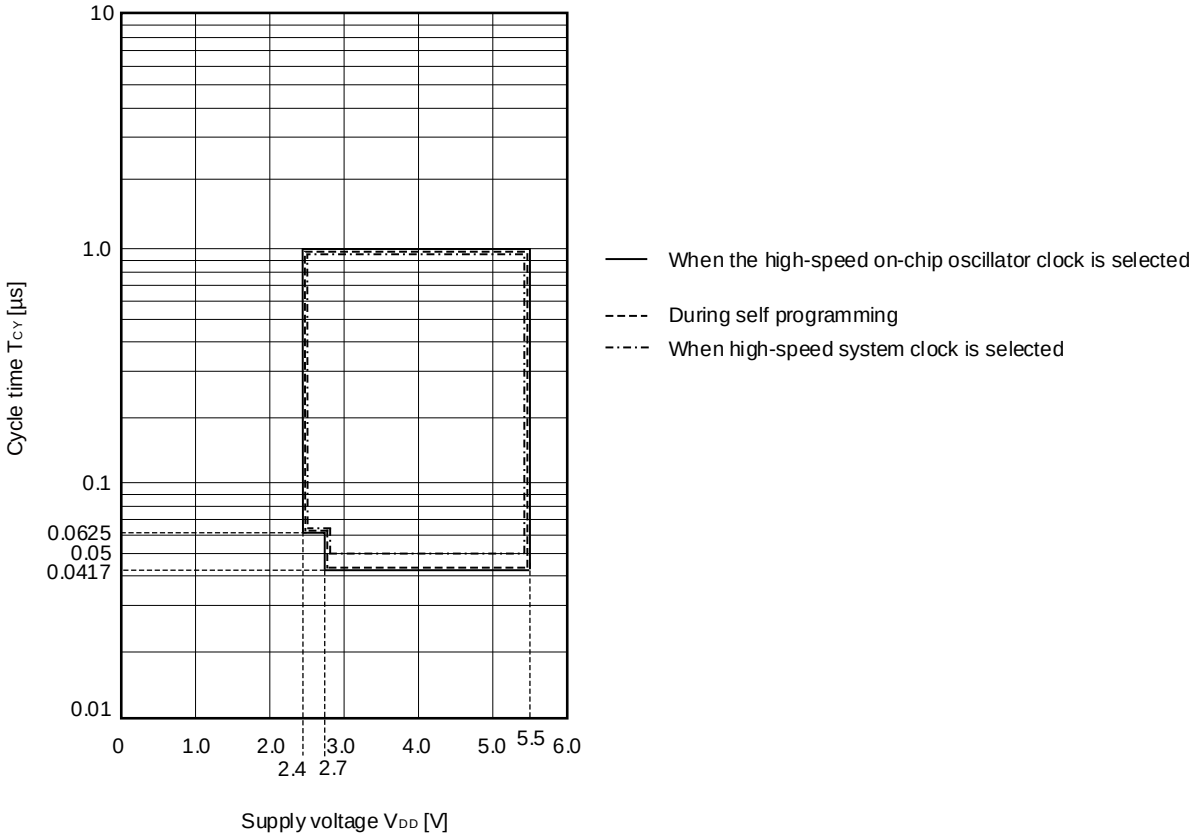

AC Timing Test Points

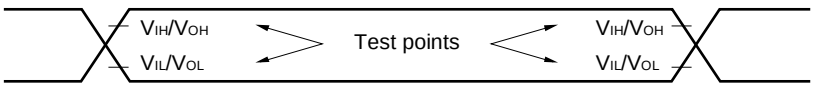

External System Clock Timing

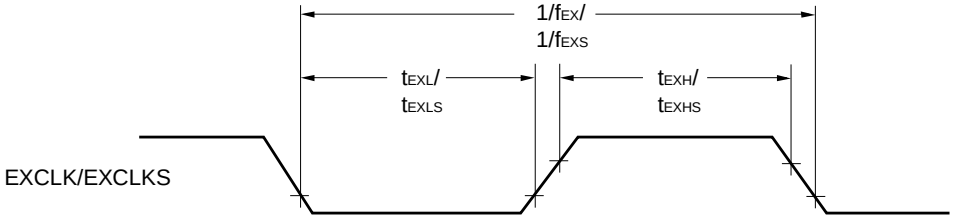

TI/TO Timing

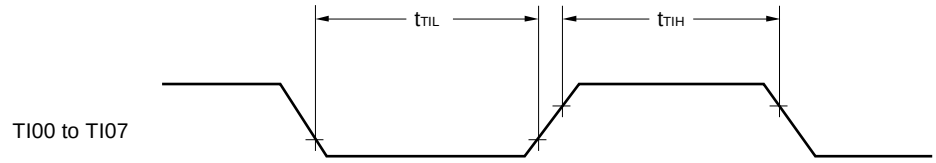

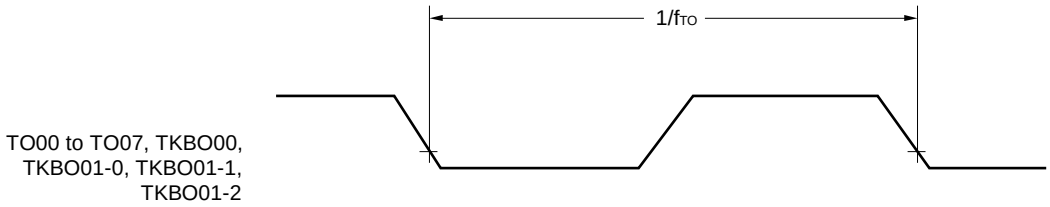

Interrupt Request Input Timing

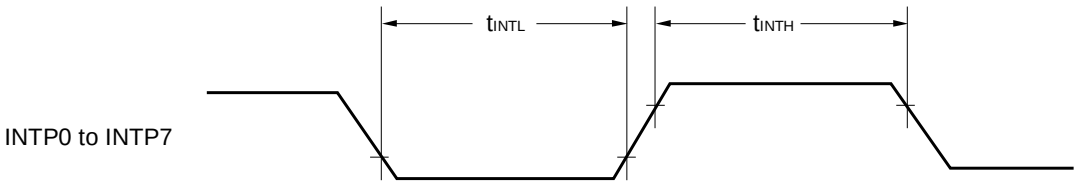

Key Interrupt Input Timing

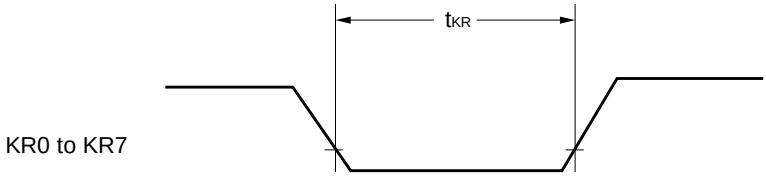

$\overline{\text{RESET}}$ Input Timing

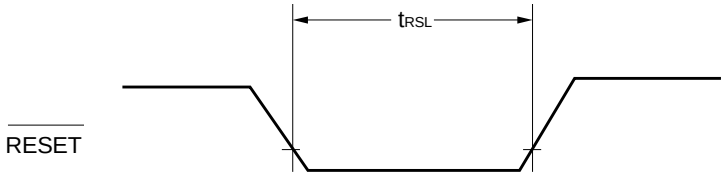

33.5 Peripheral Functions Characteristics

AC Timing Test Points

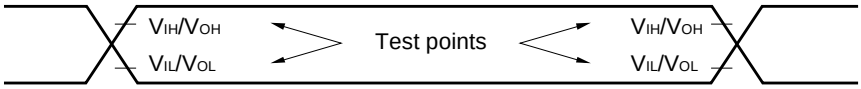

33.5.1 Serial array unit

(1) During communication at same potential (UART mode)
(T_A = –40 to +105°C, 2.4 V ≤ V_{DD} ≤ 5.5 V, V_{SS} = 0 V)

Parameter	Symbol	Conditions	HS (high-speed main) Mode		Unit
			MIN.	MAX.	
Transfer rate[Note]				f_{MCK}/12	bps
		Theoretical value of the maximum transfer rate f_{CLK} = 24 MHz, f_{MCK} = f_{CLK}		2.0	Mbps

Note Transfer rate in the SNOOZE mode is 4800 bps only.

Caution Select the normal input buffer for the RxDq pin and the normal output mode for the TxDq pin by using port input mode register g (PIMg) and port output mode register g (POMg).

UART mode connection diagram (during communication at same potential)

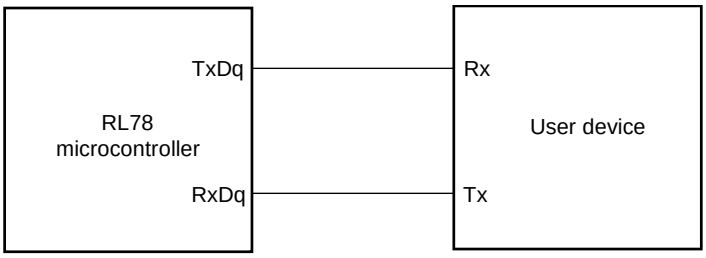

UART mode bit width (during communication at same potential) (reference)

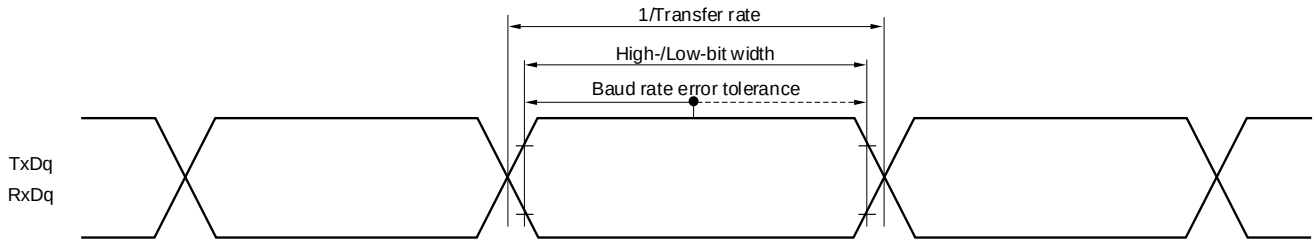

Remarks 1. q: UART number (q = 0 to 3), g: PIM and POM number (g = 0, 1, 3)

2. f_{MCK}: Serial array unit operation clock frequency
(Operation clock to be set by the CKSmn bit of serial mode register mn (SMRmn). m: Unit number, n: Channel number (mn = 00 to 03, 10 to 13))

(2) During communication at same potential (Simplified SPI (CSI) mode) (master mode, SCKp... internal clock output)

(T_A = –40 to +105°C, 2.4 V ≤ V_{DD} ≤ 5.5 V, V_{SS} = 0 V)

Parameter	Symbol	Conditions	HS (high-speed main) Mode		Unit
			MIN.	MAX.	
SCKp cycle time	t_{KCY1}	2.7 V ≤ V_{DD} ≤ 5.5 V	334 Note 1		ns
		2.4 V ≤ V_{DD} ≤ 5.5 V	500 Note 1		ns
SCKp high-/low-level width	t_{KH1}, t_{KL1}	4.0 V ≤ V_{DD} ≤ 5.5 V	t_{KCY1}/2 – 24		ns
		2.7 V ≤ V_{DD} ≤ 5.5 V	t_{KCY1}/2 – 36		ns
		2.4 V ≤ V_{DD} ≤ 5.5 V	t_{KCY1}/2 – 76		ns
SIp setup time (to SCKp↑) Note 2	t_{SIK1}	4.0 V ≤ V_{DD} ≤ 5.5 V	66		ns
		2.7 V ≤ V_{DD} ≤ 5.5 V	66		ns
		2.4 V ≤ V_{DD} ≤ 5.5 V	113		ns
SIp hold time (from SCKp↑) Note 3	t_{KSI1}		38		ns
Delay time from SCKp↓ to SOp output Note 4	t_{KSO1}	C = 30 pF Note 5		50	ns

Notes 1. The value must also be equal to or more than 4/f_{CLK}.

2. When DAPmn = 0 and CKPmn = 0, or DAPmn = 1 and CKPmn = 1. The SIp setup time becomes "to SCKp↓" when DAPmn = 0 and CKPmn = 1, or DAPmn = 1 and CKPmn = 0.

3. When DAPmn = 0 and CKPmn = 0, or DAPmn = 1 and CKPmn = 1. The SIp hold time becomes "from SCKp↓" when DAPmn = 0 and CKPmn = 1, or DAPmn = 1 and CKPmn = 0.

4. When DAPmn = 0 and CKPmn = 0, or DAPmn = 1 and CKPmn = 1. The delay time to SOp output becomes "from SCKp↑" when DAPmn = 0 and CKPmn = 1, or DAPmn = 1 and CKPmn = 0.

5. C is the load capacitance of the SCKp and SOp output lines.

Caution Select the normal input buffer for the SIp pin and the normal output mode for the SOp pin and SCKp pin by using port input mode register g (PIMg) and port output mode register g (POMg).

Remarks 1. p: CSI number (p = 00, 10), m: Unit number (m = 0), n: Channel number (n = 0, 2), g: PIM and POM numbers (g = 0, 1)

2. f_{MCK}: Serial array unit operation clock frequency (Operation clock to be set by the CKSmn bit of serial mode register mn (SMRmn). m: Unit number, n: Channel number (mn = 00, 02))

(3) During communication at same potential (Simplified SPI (CSI) mode) (slave mode, SCKp... external clock input)

(T_A = –40 to +105°C, 2.4 V ≤ V_{DD} ≤ 5.5 V, V_{SS} = 0 V)

Parameter	Symbol	Conditions		HS (high-speed main) Mode		Unit
				MIN.	MAX.	
SCKp cycle time[Note 5]	t_{KCY2}	4.0 V ≤ V_{DD} ≤ 5.5 V	f_{MCK} > 20 MHz	16/f_{MCK}		ns
			f_{MCK} ≤ 20 MHz	12/f_{MCK}		ns
		2.7 V ≤ V_{DD} ≤ 5.5 V	f_{MCK} > 16 MHz	16/f_{MCK}		ns
			f_{MCK} ≤ 16 MHz	12/f_{MCK}		ns
		2.4 V ≤ V_{DD} ≤ 5.5 V		12/f_{MCK} and 1000		ns
SCKp high-/low-level width	t_{KH2}, t_{KL2}	4.0 V ≤ V_{DD} ≤ 5.5 V		t_{KCY2}/2–14		ns
		2.7 V ≤ V_{DD} ≤ 5.5 V		t_{KCY2}/2–16		ns
		2.4 V ≤ V_{DD} ≤ 5.5 V		t_{KCY2}/2–36		ns
SIp setup time (to SCKp↑)[Note 1]	t_{SIK2}	2.7 V ≤ V_{DD} ≤ 5.5 V		1/f_{MCK}+40		ns
		2.4 V ≤ V_{DD} ≤ 5.5 V		1/f_{MCK}+60		ns
SIp hold time (from SCKp↑)[Note 2]	t_{KSI2}			1/f_{MCK}+62		ns
Delay time from SCKp↓ to SOp output[Note 3]	t_{KSO2}	C = 30 pF[Note 4]	2.7 V ≤ V_{DD} ≤ 5.5 V		2/f_{MCK}+66	ns
			2.4 V ≤ V_{DD} ≤ 5.5 V		2/f_{MCK}+113	ns

Notes 1. When DAPmn = 0 and CKPmn = 0, or DAPmn = 1 and CKPmn = 1. The SIp setup time becomes "to SCKp↓" when DAPmn = 0 and CKPmn = 1, or DAPmn = 1 and CKPmn = 0.

2. When DAPmn = 0 and CKPmn = 0, or DAPmn = 1 and CKPmn = 1. The SIp hold time becomes "from SCKp↓" when DAPmn = 0 and CKPmn = 1, or DAPmn = 1 and CKPmn = 0.

3. When DAPmn = 0 and CKPmn = 0, or DAPmn = 1 and CKPmn = 1. The delay time to SOp output becomes "from SCKp↑" when DAPmn = 0 and CKPmn = 1, or DAPmn = 1 and CKPmn = 0.

4. C is the load capacitance of the SOp output lines.

5. Transfer rate in SNOOZE mode: MAX. 1 Mbps

Caution Select the normal input buffer for the SIp pin and SCKp pin and the normal output mode for the SOp pin by using port input mode register g (PIMg) and port output mode register g (POMg).

Remarks 1. p: CSI number (p = 00, 10), m: Unit number (m = 0), n: Channel number (n = 0, 2), g: PIM number (g = 0, 1)

2. f_{MCK}: Serial array unit operation clock frequency (Operation clock to be set by the CKSmn bit of serial mode register mn (SMRmn). m: Unit number, n: Channel number (mn = 00, 02))

Simplified SPI (CSI) mode connection diagram (during communication at same potential)

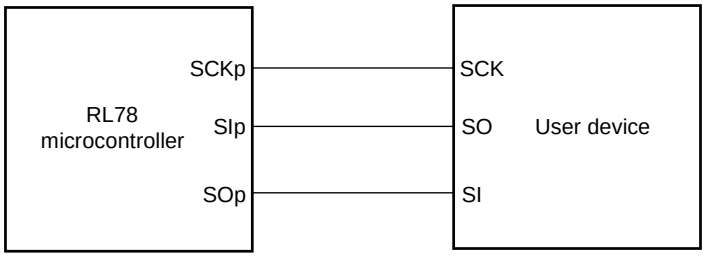

Simplified SPI (CSI) mode serial transfer timing (during communication at same potential)
(When DAPmn = 0 and CKPmn = 0, or DAPmn = 1 and CKPmn = 1.)

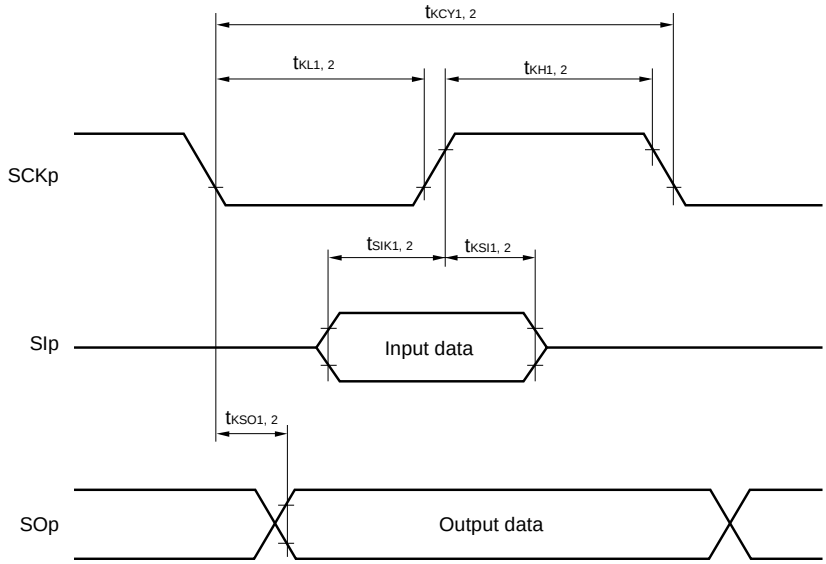

Simplified SPI (CSI) mode serial transfer timing (during communication at same potential)
(When DAPmn = 0 and CKPmn = 1, or DAPmn = 1 and CKPmn = 0.)

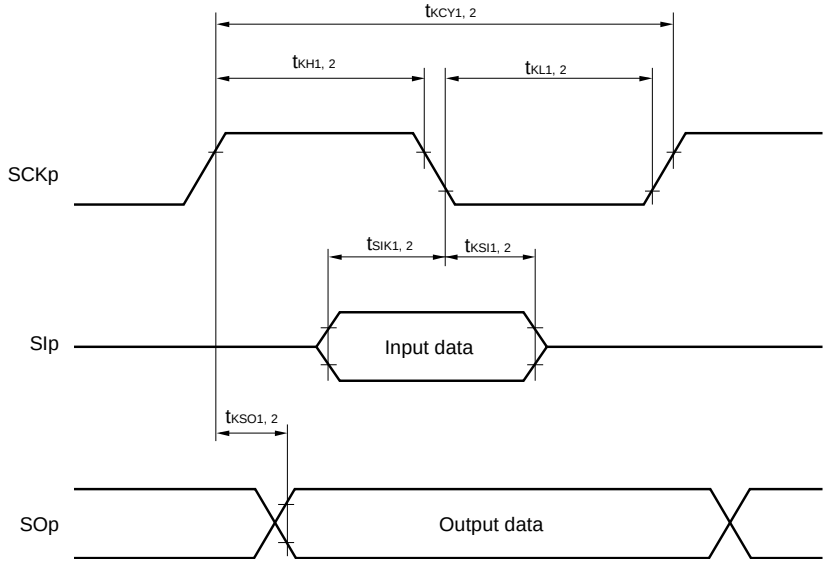

Remarks 1. p: CSI number (p = 00, 10)

2. m: Unit number, n: Channel number (mn = 00, 02)

(4) During communication at same potential (simplified I²C mode)
(T_A = –40 to +105°C, 2.4 V ≤ V_{DD} ≤ 5.5 V, V_{SS} = 0 V)

Parameter	Symbol	Conditions	HS (high-speed main) Mode		Unit
			MIN.	MAX.	
SCLr clock frequency	f_{SCL}	2.7 V ≤ V_{DD} ≤ 5.5 V, C_b = 50 pF, R_b = 2.7 kΩ		400 Note 1	kHz
		2.4 V ≤ V_{DD} ≤ 5.5 V, C_b = 100 pF, R_b = 3 kΩ		100 Note 1	kHz
Hold time when SCLr = "L"	t_{LOW}	2.7 V ≤ V_{DD} ≤ 5.5 V, C_b = 50 pF, R_b = 2.7 kΩ	1200		ns
		2.4 V ≤ V_{DD} ≤ 5.5 V, C_b = 100 pF, R_b = 3 kΩ	4600		ns
Hold time when SCLr = "H"	t_{HIGH}	2.7 V ≤ V_{DD} ≤ 5.5 V, C_b = 50 pF, R_b = 2.7 kΩ	1200		ns
		2.4 V ≤ V_{DD} ≤ 5.5 V, C_b = 100 pF, R_b = 3 kΩ	4600		ns
Data setup time (reception)	$t_{SU:DAT}$	2.7 V ≤ V_{DD} ≤ 5.5 V, C_b = 50 pF, R_b = 2.7 kΩ	$1/f_{MCK}$ + 220 Note 2		ns
		2.4 V ≤ V_{DD} ≤ 5.5 V, C_b = 100 pF, R_b = 3 kΩ	$1/f_{MCK}$ + 580 Note 2		ns
Data hold time (transmission)	$t_{HD:DAT}$	2.7 V ≤ V_{DD} ≤ 5.5 V, C_b = 50 pF, R_b = 2.7 kΩ	0	770	ns
		2.4 V ≤ V_{DD} ≤ 5.5 V, C_b = 100 pF, R_b = 3 kΩ	0	1420	ns

Notes 1. The value must also be equal to or less than $f_{MCK}/4$.
2. Set the f_{MCK} value to keep the hold time of SCLr = "L" and SCLr = "H".

Caution Select the normal input buffer and the N-ch open drain output (V_{DD} tolerance) mode for the SDAr pin and the normal output mode for the SCLr pin by using port input mode register g (PIMg) and port output mode register g (POMg).

(**Remarks** are listed on the next page.)

Simplified I²C mode connection diagram (during communication at same potential)

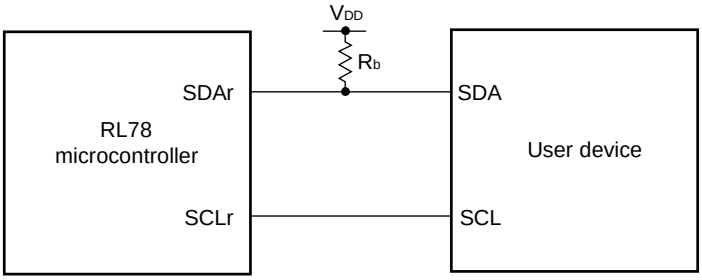

Simplified I²C mode serial transfer timing (during communication at same potential)

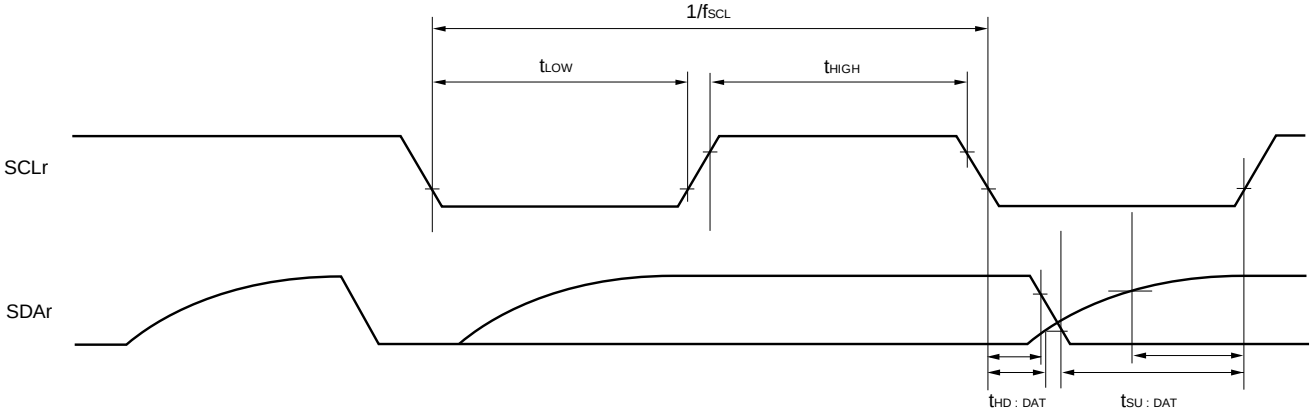

Remarks 1. R_b[Ω]: Communication line (SDAr) pull-up resistance, C_b[F]: Communication line (SDAr, SCLr) load capacitance

2. r: IIC number (r = 00, 10), g: PIM and POM number (g = 0, 1)

3. f_{MCK}: Serial array unit operation clock frequency
(Operation clock to be set by the CKSmn bit of serial mode register mn (SMRmn). m: Unit number (m = 0), n: Channel number (n = 0-3), mn = 00-03, 10-13)

(5) Communication at different potential (1.8 V, 2.5 V, 3 V) (UART mode) (1/2)

(T_A = –40 to +105°C, 2.4 V ≤ V_{DD} ≤ 5.5 V, V_{SS} = 0 V)

Parameter	Symbol	Conditions		HS (high-speed main) Mode		Unit
				MIN.	MAX.	
Transfer rate		Reception	4.0 V ≤ V_{DD} ≤ 5.5 V, 2.7 V ≤ V_b ≤ 4.0 V		$f_{MCK}/12$ Note	bps
			Theoretical value of the maximum transfer rate f_{CLK} = 24 MHz, f_{MCK} = f_{CLK}		2.0	Mbps
			2.7 V ≤ V_{DD} < 4.0 V, 2.3 V ≤ V_b ≤ 2.7 V		$f_{MCK}/12$ Note	bps
			Theoretical value of the maximum transfer rate f_{CLK} = 24 MHz, f_{MCK} = f_{CLK}		2.0	Mbps
			2.4 V ≤ V_{DD} < 3.3 V, 1.6 V ≤ V_b ≤ 2.0 V		$f_{MCK}/12$ Note	bps
			Theoretical value of the maximum transfer rate f_{CLK} = 24 MHz, f_{MCK} = f_{CLK}		2.0	Mbps

Note Transfer rate in SNOOZE mode is 4800 bps only.

Caution Select the TTL input buffer for the RxDq pin and the N-ch open drain output (V_{DD} tolerance) mode for the TxDq pin by using port input mode register g (PIMg) and port output mode register g (POMg). For V_{IH} and V_{IL}, see the DC characteristics with TTL input buffer selected.

Remarks 1. V_b[V]: Communication line voltage

2. q: UART number (q = 0 to 3), g: PIM and POM number (g = 0, 1, 3)

3. f_{MCK}: Serial array unit operation clock frequency
(Operation clock to be set by the CKSmn bit of serial mode register mn (SMRmn). m: Unit number, n: Channel number (mn = 00 to 03, 10 to 13)

(5) Communication at different potential (1.8 V, 2.5 V, 3 V) (UART mode) (2/2)

(T_A = –40 to +105°C, 2.4 V ≤ V_{DD} ≤ 5.5 V, V_{SS} = 0 V)

Parameter	Symbol	Conditions		HS (high-speed main) Mode		Unit
				MIN.	MAX.	
Transfer rate		Transmission	4.0 V ≤ V_{DD} ≤ 5.5 V, 2.7 V ≤ V_b ≤ 4.0 V		**Note 1**	bps
			Theoretical value of the maximum transfer rate C_b = 50 pF, R_b = 1.4 kΩ, V_b = 2.7 V		2.0[Note 2]	Mbps
			2.7 V ≤ V_{DD} < 4.0 V, 2.3 V ≤ V_b ≤ 2.7 V		**Note 3**	bps
			Theoretical value of the maximum transfer rate C_b = 50 pF, R_b = 2.7 kΩ, V_b = 2.3 V		1.2[Note 4]	Mbps
			2.4 V ≤ V_{DD} < 3.3 V, 1.6 V ≤ V_b ≤ 2.0 V		**Note 5**	bps
			Theoretical value of the maximum transfer rate C_b = 50 pF, R_b = 5.5 kΩ, V_b = 1.6 V		0.43[Note 6]	Mbps

Notes 1. The smaller maximum transfer rate derived by using $f_{MCK}/12$ or the following expression is the valid maximum transfer rate.

Expression for calculating the transfer rate when 4.0 V ≤ V_{DD} ≤ 5.5 V and 2.7 V ≤ V_b ≤ 4.0 V

$$\text{Maximum transfer rate} = \frac{1}{\{-C_b \times R_b \times \ln(1 - \frac{2.2}{V_b})\} \times 3} \text{ [bps]}$$

$$\text{Baud rate error (theoretical value)} = \frac{\frac{1}{\text{Transfer rate} \times 2} - \{-C_b \times R_b \times \ln(1 - \frac{2.2}{V_b})\}}{(\frac{1}{\text{Transfer rate}}) \times \text{Number of transferred bits}} \times 100 \text{ [\%]}$$

* This value is the theoretical value of the relative difference between the transmission and reception sides.

2. This value as an example is calculated when the conditions described in the “Conditions” column are met. Refer to **Note 1** above to calculate the maximum transfer rate under conditions of the customer.

3. The smaller maximum transfer rate derived by using $f_{MCK}/12$ or the following expression is the valid maximum transfer rate.

Expression for calculating the transfer rate when 2.7 V ≤ V_{DD} < 4.0 V and 2.3 V ≤ V_b ≤ 2.7 V

$$\text{Maximum transfer rate} = \frac{1}{\{-C_b \times R_b \times \ln(1 - \frac{2.0}{V_b})\} \times 3} \text{ [bps]}$$

$$\text{Baud rate error (theoretical value)} = \frac{\frac{1}{\text{Transfer rate} \times 2} - \{-C_b \times R_b \times \ln(1 - \frac{2.0}{V_b})\}}{(\frac{1}{\text{Transfer rate}}) \times \text{Number of transferred bits}} \times 100 \text{ [\%]}$$

* This value is the theoretical value of the relative difference between the transmission and reception sides.

4. This value as an example is calculated when the conditions described in the “Conditions” column are met. Refer to **Note 3** above to calculate the maximum transfer rate under conditions of the customer.

Notes 5. The smaller maximum transfer rate derived by using $f_{MCK}/12$ or the following expression is the valid maximum transfer rate.

Expression for calculating the transfer rate when 2.4 V ≤ V_{DD} < 3.3 V and 1.6 V ≤ V_b ≤ 2.0 V

$$\text{Maximum transfer rate} = \frac{1}{\{-C_b \times R_b \times \ln(1 - \frac{1.5}{V_b})\} \times 3} \text{ [bps]}$$

$$\text{Baud rate error (theoretical value)} = \frac{\frac{1}{\text{Transfer rate} \times 2} - \{-C_b \times R_b \times \ln(1 - \frac{1.5}{V_b})\}}{(\frac{1}{\text{Transfer rate}}) \times \text{Number of transferred bits}} \times 100 \text{ [\%]}$$

* This value is the theoretical value of the relative difference between the transmission and reception sides.

6. This value as an example is calculated when the conditions described in the “Conditions” column are met. Refer to **Note 5** above to calculate the maximum transfer rate under conditions of the customer.

Caution Select the TTL input buffer for the RxDq pin and the N-ch open drain output (V_{DD} tolerance) mode for the TxDq pin by using port input mode register g (PIMg) and port output mode register g (POMg). For V_{IH} and V_{IL}, see the DC characteristics with TTL input buffer selected.

UART mode connection diagram (during communication at different potential)

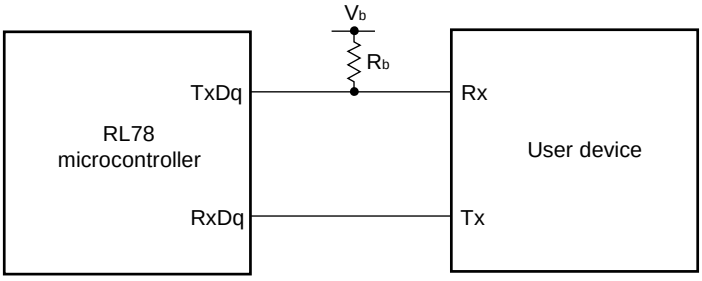

UART mode bit width (during communication at different potential) (reference)

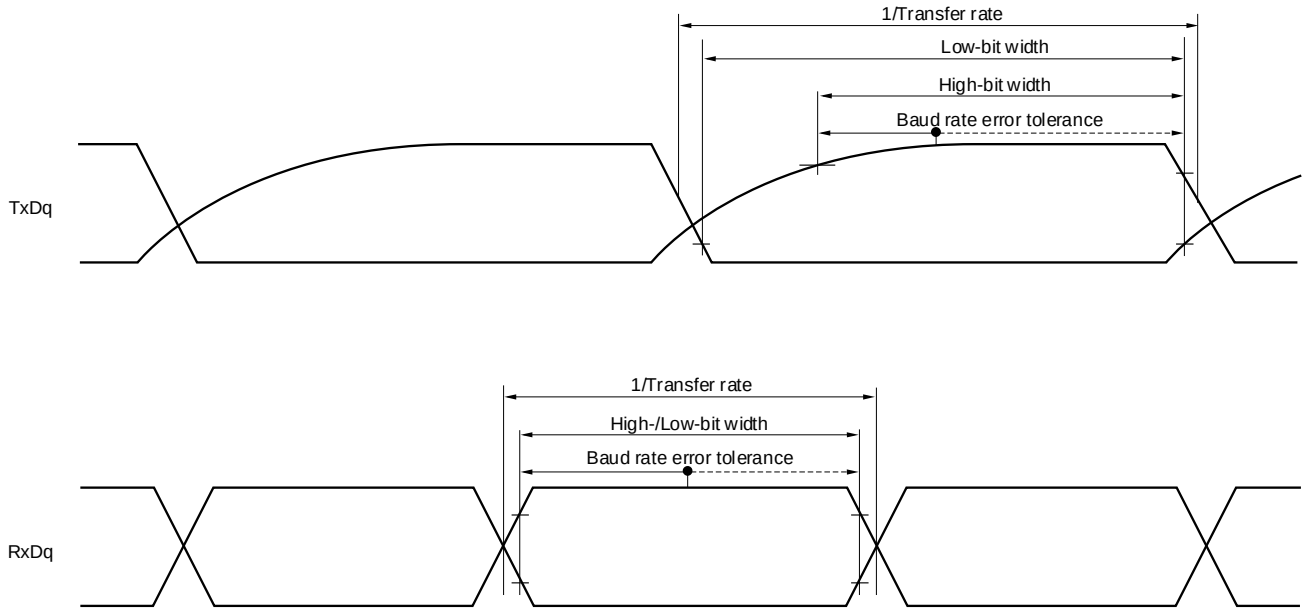

Remarks 1. R_b[Ω]: Communication line (TxDq) pull-up resistance, C_b[F]: Communication line (TxDq) load capacitance, V_b[V]: Communication line voltage

2. q: UART number (q = 0 to 3), g: PIM and POM number (g = 0, 1, 3)

3. f_{MCK}: Serial array unit operation clock frequency
(Operation clock to be set by the CKSmn bit of serial mode register mn (SMRmn).
m: Unit number, n: Channel number (mn = 00 to 03, 10 to 13))

(6) Communication at different potential (1.8 V, 2.5 V, 3 V) (Simplified SPI (CSI) mode) (master mode, SCKp... internal clock output) (1/2)

(T_A = –40 to +105°C, 2.4 V ≤ V_{DD} ≤ 5.5 V, V_{SS} = 0 V)

Parameter	Symbol	Conditions		HS (high-speed main) Mode		Unit
				MIN.	MAX.	
SCKp cycle time	t_{KCY1}	t_{KCY1} ≥ 4/f_{CLK}	4.0 V ≤ V_{DD} ≤ 5.5 V, 2.7 V ≤ V_b ≤ 4.0 V, C_b = 30 pF, R_b = 1.4 kΩ	600		ns
			2.7 V ≤ V_{DD} < 4.0 V, 2.3 V ≤ V_b ≤ 2.7 V, C_b = 30 pF, R_b = 2.7 kΩ	1000		ns
			2.4 V ≤ V_{DD} < 3.3 V, 1.6 V ≤ V_b ≤ 1.8 V, C_b = 30 pF, R_b = 5.5 kΩ	2300		ns
SCKp high-level width	t_{KH1}	4.0 V ≤ V_{DD} ≤ 5.5 V, 2.7 V ≤ V_b ≤ 4.0 V, C_b = 30 pF, R_b = 1.4 kΩ		t_{KCY1}/2 – 150		ns
		2.7 V ≤ V_{DD} < 4.0 V, 2.3 V ≤ V_b ≤ 2.7 V, C_b = 30 pF, R_b = 2.7 kΩ		t_{KCY1}/2 – 340		ns
		2.4 V ≤ V_{DD} < 3.3 V, 1.6 V ≤ V_b ≤ 2.0 V, C_b = 30 pF, R_b = 5.5 kΩ		t_{KCY1}/2 – 916		ns
SCKp low-level width	t_{KL1}	4.0 V ≤ V_{DD} ≤ 5.5 V, 2.7 V ≤ V_b ≤ 4.0 V, C_b = 30 pF, R_b = 1.4 kΩ		t_{KCY1}/2 – 24		ns
		2.7 V ≤ V_{DD} < 4.0 V, 2.3 V ≤ V_b ≤ 2.7 V, C_b = 30 pF, R_b = 2.7 kΩ		t_{KCY1}/2 – 36		ns
		2.4 V ≤ V_{DD} < 3.3 V, 1.6 V ≤ V_b ≤ 2.0 V, C_b = 30 pF, R_b = 5.5 kΩ		t_{KCY1}/2 – 100		ns
SIp setup time (to SCKp↑)[Note 1]	t_{SIK1}	4.0 V ≤ V_{DD} ≤ 5.5 V, 2.7 V ≤ V_b ≤ 4.0 V, C_b = 30 pF, R_b = 1.4 kΩ		162		ns
		2.7 V ≤ V_{DD} < 4.0 V, 2.3 V ≤ V_b ≤ 2.7 V, C_b = 30 pF, R_b = 2.7 kΩ		354		ns
		2.4 V ≤ V_{DD} < 3.3 V, 1.6 V ≤ V_b ≤ 2.0 V, C_b = 30 pF, R_b = 5.5 kΩ		958		ns
SIp hold time (from SCKp↑)[Note 1]	t_{KSI1}	4.0 V ≤ V_{DD} ≤ 5.5 V, 2.7 V ≤ V_b ≤ 4.0 V, C_b = 30 pF, R_b = 1.4 kΩ		38		ns
		2.7 V ≤ V_{DD} < 4.0 V, 2.3 V ≤ V_b ≤ 2.7 V, C_b = 30 pF, R_b = 2.7 kΩ		38		ns
		2.4 V ≤ V_{DD} < 3.3 V, 1.6 V ≤ V_b ≤ 2.0 V, C_b = 30 pF, R_b = 5.5 kΩ		38		ns
Delay time from SCKp↓ to SOp output[Note 1]	t_{KSO1}	4.0 V ≤ V_{DD} ≤ 5.5 V, 2.7 V ≤ V_b ≤ 4.0 V, C_b = 30 pF, R_b = 1.4 kΩ			200	ns
		2.7 V ≤ V_{DD} < 4.0 V, 2.3 V ≤ V_b ≤ 2.7 V, C_b = 30 pF, R_b = 2.7 kΩ			390	ns
		2.4 V ≤ V_{DD} < 3.3 V, 1.6 V ≤ V_b ≤ 2.0 V, C_b = 30 pF, R_b = 5.5 kΩ			966	ns

(**Note**, **Caution** and **Remark** are listed on the next page.)

(6) Communication at different potential (1.8 V, 2.5 V, 3 V) (Simplified SPI (CSI) mode) (master mode, SCKp... internal clock output) (2/2)

(T_A = –40 to +105°C, 2.4 V ≤ V_{DD} ≤ 5.5 V, V_{SS} = 0 V)

Parameter	Symbol	Conditions	HS (high-speed main) Mode		Unit
			MIN.	MAX.	
SIp setup time (to SCKp↓)[Note 2]	t_{SIK1}	4.0 V ≤ V_{DD} ≤ 5.5 V, 2.7 V ≤ V_b ≤ 4.0 V, C_b = 20 pF, R_b = 1.4 kΩ	88		ns
		2.7 V ≤ V_{DD} < 4.0 V, 2.3 V ≤ V_b ≤ 2.7 V, C_b = 20 pF, R_b = 2.7 kΩ	88		ns
		2.4 V ≤ V_{DD} < 3.3 V, 1.6 V ≤ V_b ≤ 2.0 V, C_b = 30 pF, R_b = 5.5 kΩ	220		ns
SIp hold time (from SCKp↓)[Note 2]	t_{KSI1}	4.0 V ≤ V_{DD} ≤ 5.5 V, 2.7 V ≤ V_b ≤ 4.0 V, C_b = 20 pF, R_b = 1.4 kΩ	38		ns
		2.7 V ≤ V_{DD} < 4.0 V, 2.3 V ≤ V_b ≤ 2.7 V, C_b = 20 pF, R_b = 2.7 kΩ	38		ns
		2.4 V ≤ V_{DD} < 3.3 V, 1.6 V ≤ V_b ≤ 2.0 V, C_b = 30 pF, R_b = 5.5 kΩ	38		ns
Delay time from SCKp↑ to SOp output[Note 2]	t_{KSO1}	4.0 V ≤ V_{DD} ≤ 5.5 V, 2.7 V ≤ V_b ≤ 4.0 V, C_b = 20 pF, R_b = 1.4 kΩ		50	ns
		2.7 V ≤ V_{DD} < 4.0 V, 2.3 V ≤ V_b ≤ 2.7 V, C_b = 20 pF, R_b = 2.7 kΩ		50	ns
		2.4 V ≤ V_{DD} < 3.3 V, 1.6 V ≤ V_b ≤ 2.0 V, C_b = 30 pF, R_b = 5.5 kΩ		50	ns

Simplified SPI (CSI) mode connection diagram (during communication at different potential)

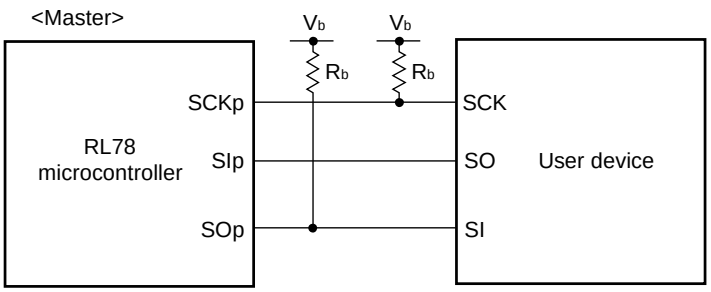

Notes 1. When DAPmn = 0 and CKPmn = 0, or DAPmn = 1 and CKPmn = 1.

2. When DAPmn = 0 and CKPmn = 1, or DAPmn = 1 and CKPmn = 0.

Caution Select the TTL input buffer for the SIp pin and the N-ch open drain output (V_{DD} tolerance) mode for the SOp pin and SCKp pin by using port input mode register g (PIMg) and port output mode register g (POMg). For V_{IH} and V_{IL}, see the DC characteristics with TTL input buffer selected.

Remarks 1. R_b[Ω]: Communication line (SCKp, SOp) pull-up resistance, C_b[F]: Communication line (SCKp, SOp) load capacitance, V_b[V]: Communication line voltage

2. p: CSI number (p = 00, 10), m: Unit number, n: Channel number (mn = 00, 02), g: PIM and POM number (g = 0, 1)

3. f_{MCK}: Serial array unit operation clock frequency (Operation clock to be set by the CKSmn bit of serial mode register mn (SMRmn). m: Unit number, n: Channel number (mn = 00))

Simplified SPI (CSI) mode serial transfer timing (master mode) (during communication at different potential)
(When DAPmn = 0 and CKPmn = 0, or DAPmn = 1 and CKPmn = 1.)

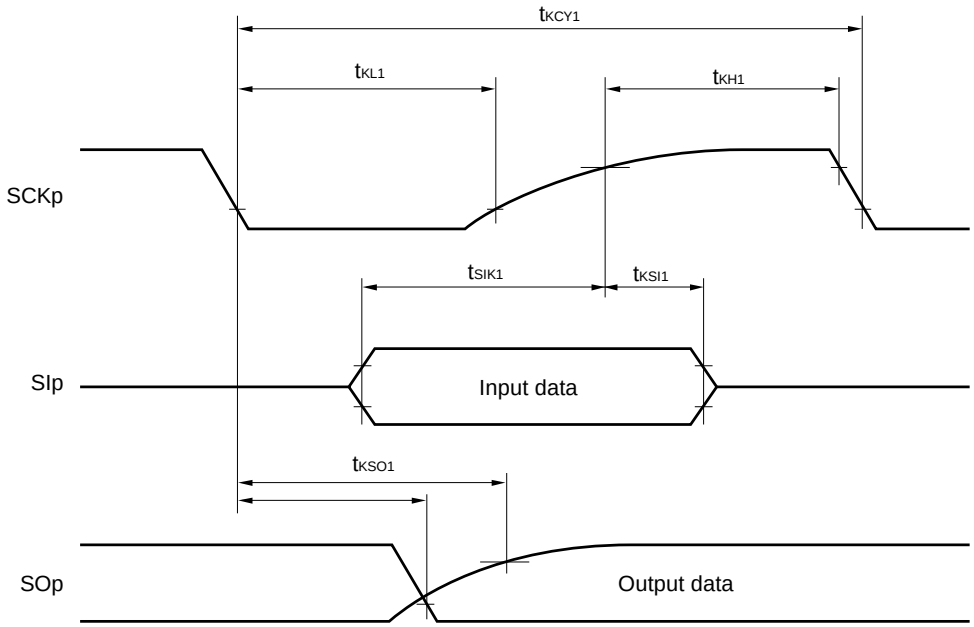

Simplified SPI (CSI) mode serial transfer timing (master mode) (during communication at different potential)
(When DAPmn = 0 and CKPmn = 1, or DAPmn = 1 and CKPmn = 0.)

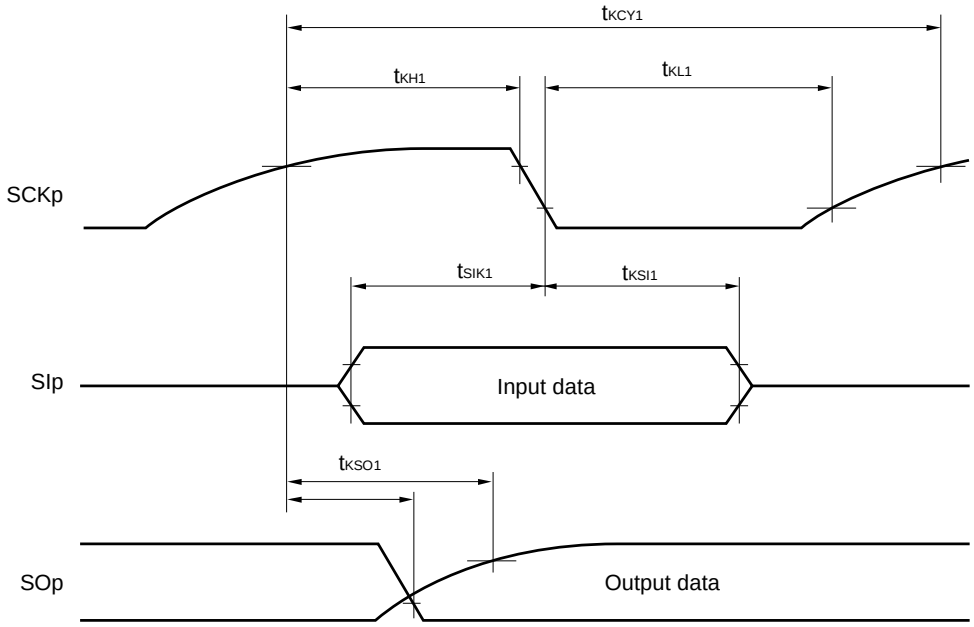

Remark p: CSI number (p = 00, 10), m: Unit number, n: Channel number (mn = 00, 02),
g: PIM and POM number (g = 0, 1)

(7) Communication at different potential (1.8 V, 2.5 V, 3 V) (Simplified SPI (CSI) mode) (slave mode, SCKp... external clock input)

(T_A = –40 to +105°C, 2.4 V ≤ V_{DD} ≤ 5.5 V, V_{SS} = 0 V)

Parameter	Symbol	Conditions		HS (high-speed main) Mode		Unit
				MIN.	MAX.	
SCKp cycle time Note 1	t_{KCY2}	4.0 V ≤ V_{DD} ≤ 5.5 V, 2.7 V ≤ V_b ≤ 4.0 V	20 MHz < f_{MCK}	24/f_{MCK}		ns
			8 MHz < f_{MCK} ≤ 20 MHz	20/f_{MCK}		ns
			4 MHz < f_{MCK} ≤ 8 MHz	16/f_{MCK}		ns
			f_{MCK} ≤ 4 MHz	12/f_{MCK}		ns
		2.7 V ≤ V_{DD} < 4.0 V, 2.3 V ≤ V_b ≤ 2.7 V	20 MHz < f_{MCK}	32/f_{MCK}		ns
			16 MHz < f_{MCK} ≤ 20 MHz	28/f_{MCK}		ns
			8 MHz < f_{MCK} ≤ 16 MHz	24/f_{MCK}		ns
			4 MHz < f_{MCK} ≤ 8 MHz	16/f_{MCK}		ns
			f_{MCK} ≤ 4 MHz	12/f_{MCK}		ns
		2.4 V ≤ V_{DD} < 3.3 V, 1.6 V ≤ V_b ≤ 2.0 V	20 MHz < f_{MCK}	72/f_{MCK}		ns
			16 MHz < f_{MCK} ≤ 20 MHz	64/f_{MCK}		ns
			8 MHz < f_{MCK} ≤ 16 MHz	52/f_{MCK}		ns
			4 MHz < f_{MCK} ≤ 8 MHz	32/f_{MCK}		ns
			f_{MCK} ≤ 4 MHz	20/f_{MCK}		ns
SCKp high-/low-level width	t_{KH2}, t_{KL2}	4.0 V ≤ V_{DD} ≤ 5.5 V, 2.7 V ≤ V_b ≤ 4.0 V		t_{KCY2}/2 – 24		ns
		2.7 V ≤ V_{DD} < 4.0 V, 2.3 V ≤ V_b ≤ 2.7 V		t_{KCY2}/2 – 36		ns
		2.4 V ≤ V_{DD} < 3.3 V, 1.6 V ≤ V_b ≤ 2.0 V		t_{KCY2}/2 – 100		ns
SIp setup time (to SCKp↑) Note 2	t_{SIK2}	4.0 V ≤ V_{DD} ≤ 5.5 V, 2.7 V ≤ V_b ≤ 4.0 V		1/f_{MCK} + 40		ns
		2.7 V ≤ V_{DD} < 4.0 V, 2.3 V ≤ V_b ≤ 2.7 V		1/f_{MCK} + 40		ns
		2.4 V ≤ V_{DD} < 3.3 V, 1.6 V ≤ V_b ≤ 2.0 V		1/f_{MCK} + 60		ns
SIp hold time (from SCKp↑) Note 3	t_{KSI2}	4.0 V ≤ V_{DD} ≤ 5.5 V, 2.7 V ≤ V_b ≤ 4.0 V		1/f_{MCK} + 62		ns
		2.7 V ≤ V_{DD} ≤ 4.0 V, 2.3 V ≤ V_b ≤ 2.7 V		1/f_{MCK} + 62		ns
		2.4 V ≤ V_{DD} ≤ 3.3 V, 1.6 V ≤ V_b ≤ 2.0 V		1/f_{MCK} + 62		ns
Delay time from SCKp↓ to SOp output Note 4	t_{KSO2}	4.0 V ≤ V_{DD} ≤ 5.5 V, 2.7 V ≤ V_b ≤ 4.0 V, C_b = 30 pF, R_b = 1.4 kΩ			2/f_{MCK} + 240	ns
		2.7 V ≤ V_{DD} < 4.0 V, 2.3 V ≤ V_b ≤ 2.7 V, C_b = 30 pF, R_b = 2.7 kΩ			2/f_{MCK} + 428	ns
		2.4 V ≤ V_{DD} < 3.3 V, 1.6 V ≤ V_b ≤ 2.0 V, C_b = 30 pF, R_b = 5.5 kΩ			2/f_{MCK} + 1146	ns

(**Notes** and **Caution** are listed on the next page, and **Remarks** are listed on the page after the next page.)

Simplified SPI (CSI) mode connection diagram (during communication at different potential)

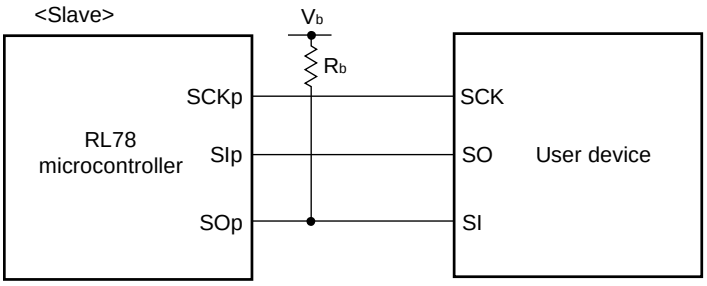

Notes 1. Transfer rate in SNOOZE mode: MAX. 1 Mbps

2. When DAPmn = 0 and CKPmn = 0, or DAPmn = 1 and CKPmn = 1. The SIp setup time becomes "to SCKp↓" when DAPmn = 0 and CKPmn = 1, or DAPmn = 1 and CKPmn = 0.

3. When DAPmn = 0 and CKPmn = 0, or DAPmn = 1 and CKPmn = 1. The SIp hold time becomes "from SCKp↓" when DAPmn = 0 and CKPmn = 1, or DAPmn = 1 and CKPmn = 0.

4. When DAPmn = 0 and CKPmn = 0, or DAPmn = 1 and CKPmn = 1. The delay time to SOp output becomes "from SCKp↑" when DAPmn = 0 and CKPmn = 1, or DAPmn = 1 and CKPmn = 0.

Caution Select the TTL input buffer for the SIp pin and SCKp pin and the N-ch open drain output (V_{DD} tolerance) mode for the SOp pin by using port input mode register g (PIMg) and port output mode register g (POMg). For V_{IH} and V_{IL}, see the DC characteristics with TTL input buffer selected.

Simplified SPI (CSI) mode serial transfer timing (slave mode) (during communication at different potential)
(When DAPmn = 0 and CKPmn = 0, or DAPmn = 1 and CKPmn = 1.)

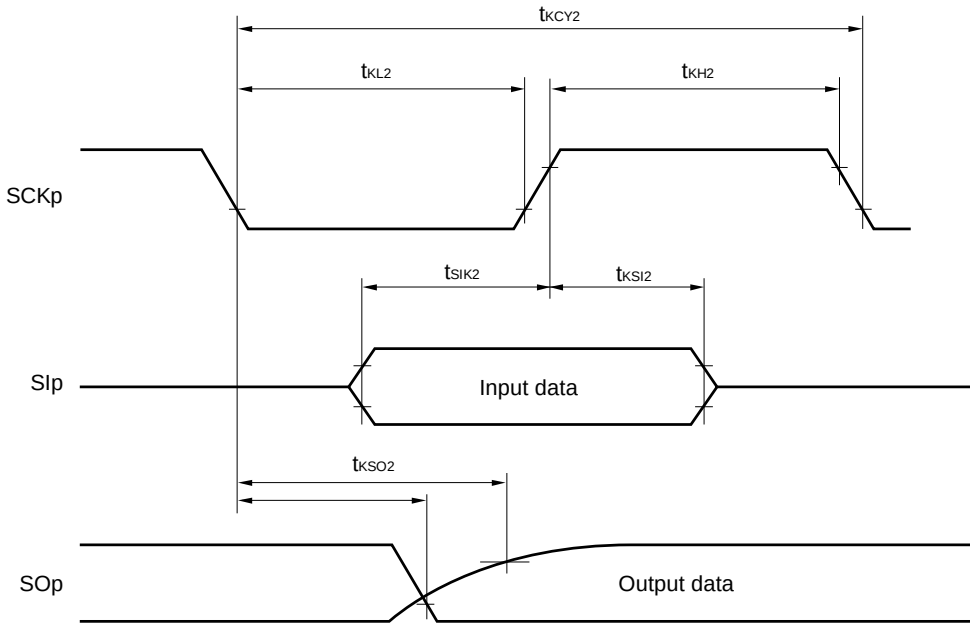

Simplified SPI (CSI) mode serial transfer timing (slave mode) (during communication at different potential)
(When DAPmn = 0 and CKPmn = 1, or DAPmn = 1 and CKPmn = 0.)

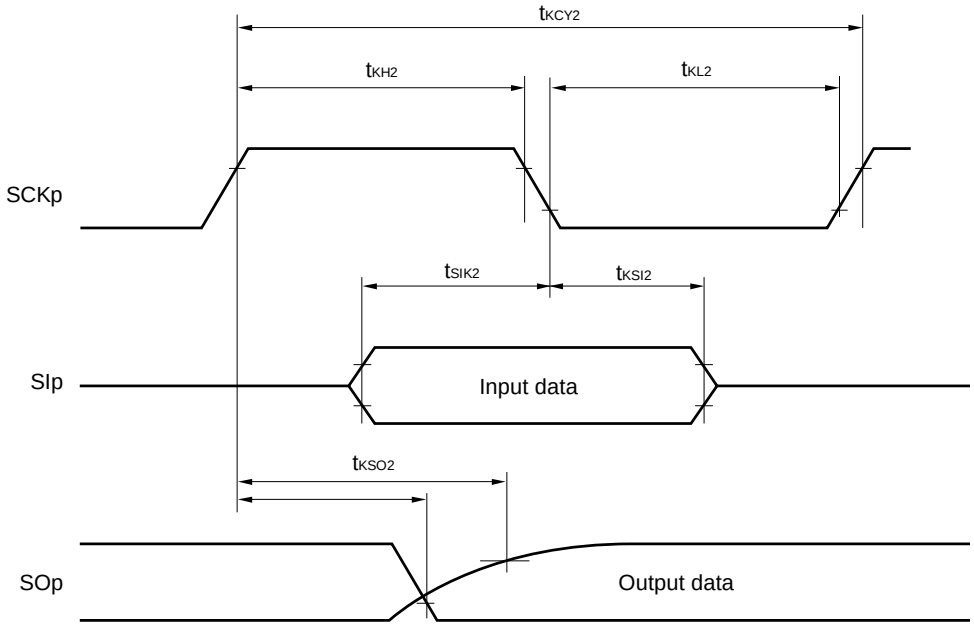

Remarks 1. R_b[Ω]: Communication line (SOp) pull-up resistance, C_b[F]: Communication line (SOp) load capacitance, V_b[V]: Communication line voltage

2. p: CSI number (p = 00, 10), m: Unit number, n: Channel number (mn = 00, 02), g: PIM and POM number (g = 0, 1)

3. f_{MCK}: Serial array unit operation clock frequency
(Operation clock to be set by the CKSmn bit of serial mode register mn (SMRmn)
m: Unit number, n: Channel number (mn = 00, 02))

(8) Communication at different potential (1.8 V, 2.5 V, 3 V) (simplified I²C mode) (1/2)

(T_A = –40 to +105°C, 2.4 V ≤ V_{DD} ≤ 5.5 V, V_{SS} = 0 V)

Parameter	Symbol	Conditions	HS (high-speed main) Mode		Unit
			MIN.	MAX.	
SCLr clock frequency	f_{SCL}	4.0 V ≤ V_{DD} ≤ 5.5 V, 2.7 V ≤ V_b ≤ 4.0 V, C_b = 50 pF, R_b = 2.7 kΩ		400 Note 1	kHz
		2.7 V ≤ V_{DD} < 4.0 V, 2.3 V ≤ V_b ≤ 2.7 V, C_b = 50 pF, R_b = 2.7 kΩ		400 Note 1	kHz
		4.0 V ≤ V_{DD} ≤ 5.5 V, 2.7 V ≤ V_b ≤ 4.0 V, C_b = 100 pF, R_b = 2.8 kΩ		100 Note 1	kHz
		2.7 V ≤ V_{DD} < 4.0 V, 2.3 V ≤ V_b ≤ 2.7 V, C_b = 100 pF, R_b = 2.7 kΩ		100 Note 1	kHz
		2.4 V ≤ V_{DD} < 3.3 V, 1.6 V ≤ V_b ≤ 2.0 V, C_b = 100 pF, R_b = 5.5 kΩ		100 Note 1	kHz
Hold time when SCLr = "L"	t_{LOW}	4.0 V ≤ V_{DD} ≤ 5.5 V, 2.7 V ≤ V_b ≤ 4.0 V, C_b = 50 pF, R_b = 2.7 kΩ	1200		ns
		2.7 V ≤ V_{DD} < 4.0 V, 2.3 V ≤ V_b ≤ 2.7 V, C_b = 50 pF, R_b = 2.7 kΩ	1200		ns
		4.0 V ≤ V_{DD} ≤ 5.5 V, 2.7 V ≤ V_b ≤ 4.0 V, C_b = 100 pF, R_b = 2.8 kΩ	4600		ns
		2.7 V ≤ V_{DD} < 4.0 V, 2.3 V ≤ V_b ≤ 2.7 V, C_b = 100 pF, R_b = 2.7 kΩ	4600		ns
		2.4 V ≤ V_{DD} < 3.3 V, 1.6 V ≤ V_b ≤ 2.0 V, C_b = 100 pF, R_b = 5.5 kΩ	4650		ns
Hold time when SCLr = "H"	t_{HIGH}	4.0 V ≤ V_{DD} ≤ 5.5 V, 2.7 V ≤ V_b ≤ 4.0 V, C_b = 50 pF, R_b = 2.7 kΩ	620		ns
		2.7 V ≤ V_{DD} < 4.0 V, 2.3 V ≤ V_b < 2.7 V, C_b = 50 pF, R_b = 2.7 kΩ	500		ns
		4.0 V ≤ V_{DD} ≤ 5.5 V, 2.7 V ≤ V_b ≤ 4.0 V, C_b = 100 pF, R_b = 2.8 kΩ	2700		ns
		2.7 V ≤ V_{DD} < 4.0 V, 2.3 V ≤ V_b ≤ 2.7 V, C_b = 100 pF, R_b = 2.7 kΩ	2400		ns
		2.4 V ≤ V_{DD} < 3.3 V, 1.6 V ≤ V_b ≤ 2.0 V, C_b = 100 pF, R_b = 5.5 kΩ	1830		ns

(**Notes** and **Caution** are listed on the next page, and **Remarks** are listed on the page after the next page.)

(8) Communication at different potential (1.8 V, 2.5 V, 3 V) (simplified I²C mode) (2/2)

(T_A = –40 to +105°C, 2.4 V ≤ V_{DD} ≤ 5.5 V, V_{SS} = 0 V)

Parameter	Symbol	Conditions	HS (high-speed main) Mode		Unit
			MIN.	MAX.	
Data setup time (reception)	$t_{SU:DAT}$	4.0 V ≤ V_{DD} ≤ 5.5 V, 2.7 V ≤ V_b ≤ 4.0 V, C_b = 50 pF, R_b = 2.7 kΩ	$1/f_{MCK}$ + 340 Note 2		ns
		2.7 V ≤ V_{DD} < 4.0 V, 2.3 V ≤ V_b ≤ 2.7 V, C_b = 50 pF, R_b = 2.7 kΩ	$1/f_{MCK}$ + 340 Note 2		ns
		4.0 V ≤ V_{DD} ≤ 5.5 V, 2.7 V ≤ V_b ≤ 4.0 V, C_b = 100 pF, R_b = 2.8 kΩ	$1/f_{MCK}$ + 760 Note 2		ns
		2.7 V ≤ V_{DD} < 4.0 V, 2.3 V ≤ V_b ≤ 2.7 V, C_b = 100 pF, R_b = 2.7 kΩ	$1/f_{MCK}$ + 760 Note 2		ns
		2.4 V ≤ V_{DD} < 3.3 V, 1.6 V ≤ V_b ≤ 2.0 V, C_b = 100 pF, R_b = 5.5 kΩ	$1/f_{MCK}$ + 570 Note 2		ns
Data hold time (transmission)	$t_{HD:DAT}$	4.0 V ≤ V_{DD} ≤ 5.5 V, 2.7 V ≤ V_b ≤ 4.0 V, C_b = 50 pF, R_b = 2.7 kΩ	0	770	ns
		2.7 V ≤ V_{DD} < 4.0 V, 2.3 V ≤ V_b ≤ 2.7 V, C_b = 50 pF, R_b = 2.7 kΩ	0	770	ns
		4.0 V ≤ V_{DD} ≤ 5.5 V, 2.7 V ≤ V_b ≤ 4.0 V, C_b = 100 pF, R_b = 2.8 kΩ	0	1420	ns
		2.7 V ≤ V_{DD} < 4.0 V, 2.3 V ≤ V_b ≤ 2.7 V, C_b = 100 pF, R_b = 2.7 kΩ	0	1420	ns
		2.4 V ≤ V_{DD} < 3.3 V, 1.6 V ≤ V_b ≤ 2.0 V , C_b = 100 pF, R_b = 5.5 kΩ	0	1215	ns

Notes 1. The value must also be equal to or less than f_{MCK}/4.

2. Set the f_{MCK} value to keep the hold time of SCLr = "L" and SCLr = "H".

Caution Select the TTL input buffer and the N-ch open drain output (V_{DD} tolerance) mode for the SDAr pin and the N-ch open drain output (V_{DD} tolerance) mode for the SCLr pin by using port input mode register g (PIMg) and port output mode register g (POMg). For V_{IH} and V_{IL}, see the DC characteristics with TTL input buffer selected.

(**Remarks** are listed on the next page.)

Simplified I²C mode connection diagram (during communication at different potential)

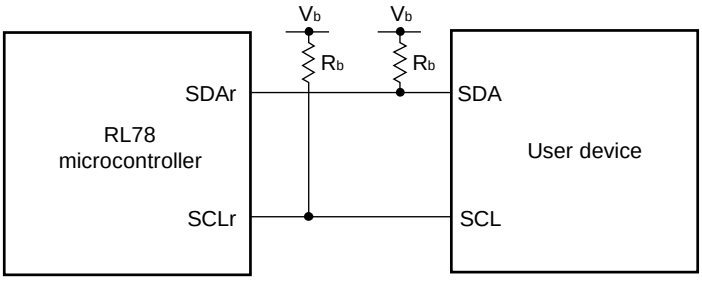

Simplified I²C mode serial transfer timing (during communication at different potential)

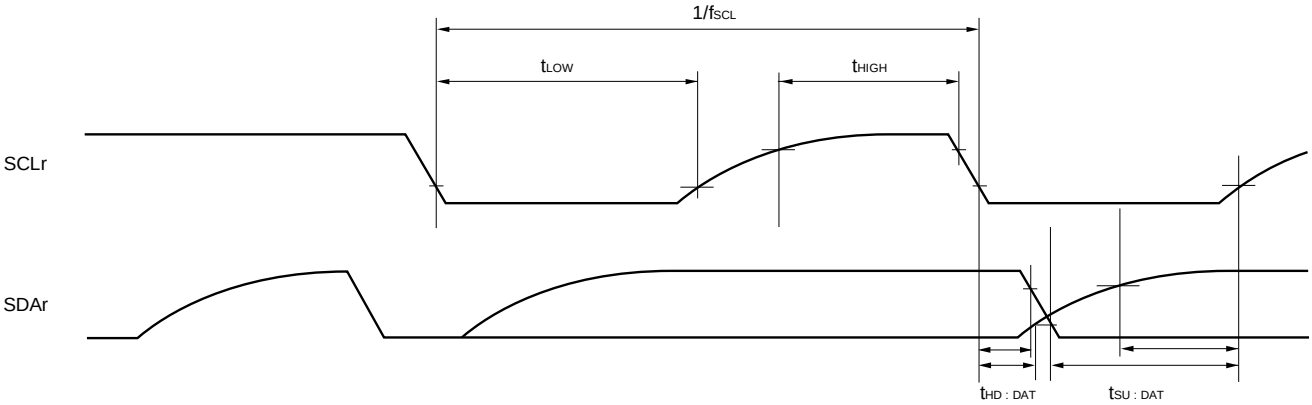

Remarks 1. R_b[Ω]: Communication line (SDAr, SCLr) pull-up resistance, C_b[F]: Communication line (SDAr, SCLr) load capacitance, V_b[V]: Communication line voltage

2. r: IIC number (r = 00, 10), g: PIM, POM number (g = 0, 1)

3. f_{MCK}: Serial array unit operation clock frequency
(Operation clock to be set by the CKSmn bit of serial mode register mn (SMRmn). m: Unit number, n: Channel number (mn = 00, 02)

33.5.2 Serial interface IICA

(T_A = –40 to +105°C, 2.4 V ≤ V_{DD} ≤ 5.5 V, V_{SS} = 0 V)

Parameter	Symbol	Conditions	HS (high-speed main) Mode				Unit
			Standard Mode		Fast Mode		
			MIN.	MAX.	MIN.	MAX.	
SCLA0 clock frequency	f_{SCL}	Fast mode: f_{CLK} ≥ 3.5 MHz	–	–	0	400	kHz
		Normal mode: f_{CLK} ≥ 1 MHz	0	100	–	–	kHz
Setup time of restart condition	$t_{SU:STA}$		4.7		0.6		μs
Hold time[Note 1]	$t_{HD:STA}$		4.0		0.6		μs
Hold time when SCLA0 = "L"	t_{LOW}		4.7		1.3		μs
Hold time when SCLA0 = "H"	t_{HIGH}		4.0		0.6		μs
Data setup time (reception)	$t_{SU:DAT}$		250		100		ns
Data hold time (transmission)[Note 2]	$t_{HD:DAT}$		0	3.45	0	0.9	μs
Setup time of stop condition	$t_{SU:STO}$		4.0		0.6		μs
Bus-free time	t_{BUF}		4.7		1.3		μs

Notes 1. The first clock pulse is generated after this period when the start/restart condition is detected.

2. The maximum value (MAX.) of $t_{HD:DAT}$ is during normal transfer and a clock stretch state is inserted in the ACK (acknowledge) timing.

Remark The maximum value of C_b (communication line capacitance) and the value of R_b (communication line pull-up resistor) at that time in each mode are as follows.

Standard mode: C_b = 400 pF, R_b = 2.7 kΩ
Fast mode: C_b = 320 pF, R_b = 1.1 kΩ

IICA serial transfer timing

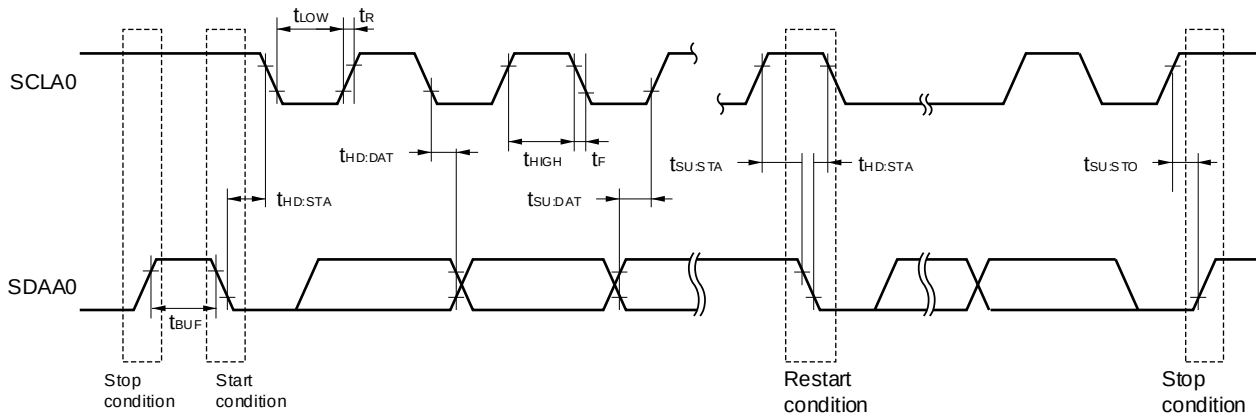

33.6 Analog Characteristics

33.6.1 A/D converter characteristics

Classification of A/D converter characteristics

Reference Voltage / Input channel	Reference voltage (+) = AV_{REFP} Reference voltage (–) = AV_{REFM}	Reference voltage (+) = V_{DD} Reference voltage (–) = V_{SS}	Reference voltage (+) = V_{BGR} Reference voltage (–) = AV_{REFM}
ANI0, ANI1	–	See **33.6.1 (2)**.	See **33.6.1 (3)**.
ANI16 to ANI25	See **33.6.1 (1)**.		
Internal reference voltage Temperature sensor output voltage	See **33.6.1 (1)**.		–

(1) When reference voltage (+) = AV_{REFP}/ANI0 (ADREFP1 = 0, ADREFP0 = 1), reference voltage (–) = AV_{REFM}/ANI1 (ADREFM = 1), target pins: ANI16 to ANI25, internal reference voltage, and temperature sensor output voltage

(T_A = –40 to +105°C, 2.4 V ≤ AV_{REFP} ≤ V_{DD} ≤ 5.5 V, V_{SS} = 0 V, Reference voltage (+) = AV_{REFP}, Reference voltage (–) = AV_{REFM} = 0 V)

Parameter	Symbol	Conditions		MIN.	TYP.	MAX.	Unit
Resolution	RES			8		10	bit
Overall error[Note 1]	AINL	10-bit resolution AV_{REFP} = V_{DD}[Note 3]	2.4 V ≤ V_{DD} ≤ 5.5 V		1.2	±5.0	LSB
Conversion time	t_{CONV}	10-bit resolution Target pin: ANI16 to ANI25	3.6 V ≤ V_{DD} ≤ 5.5 V	2.125		39	μs
			2.7 V ≤ V_{DD} ≤ 5.5 V	3.1875		39	μs
			2.4 V ≤ V_{DD} ≤ 5.5 V	17		39	μs
		10-bit resolution Target pin: Internal reference voltage, and temperature sensor output voltage (HS (high-speed main) mode)	3.6 V ≤ V_{DD} ≤ 5.5 V	2.375		39	μs
			2.7 V ≤ V_{DD} ≤ 5.5 V	3.5625		39	μs
			2.4 V ≤ V_{DD} ≤ 5.5 V	17		39	μs
Zero-scale error[Notes 1, 2]	E_{ZS}	10-bit resolution AV_{REFP} = V_{DD}[Note 3]	2.4 V ≤ V_{DD} ≤ 5.5 V			±0.35	%FSR
Full-scale error[Notes 1, 2]	E_{FS}	10-bit resolution AV_{REFP} = V_{DD}[Note 3]	2.4 V ≤ V_{DD} ≤ 5.5 V			±0.35	%FSR
Integral linearity error[Note 1]	ILE	10-bit resolution AV_{REFP} = V_{DD}[Note 3]	2.4 V ≤ V_{DD} ≤ 5.5 V			±3.5	LSB
Differential linearity error[Note 1]	DLE	10-bit resolution AV_{REFP} = V_{DD}[Note 3]	2.4 V ≤ V_{DD} ≤ 5.5 V			±2.0	LSB
Analog input voltage	V_{AIN}	ANI16 to ANI25		0		AV_{REFP}	V
		Internal reference voltage (2.4 V ≤ V_{DD} ≤ 5.5 V, HS (high-speed main) mode))		V_{BGR}[Note 4]			V
		Temperature sensor output voltage (2.4 V ≤ V_{DD} ≤ 5.5 V, HS (high-speed main) mode))		V_{TMPS25}[Note 4]			V

(**Notes** are listed on the next page.)

Notes 1. Excludes quantization error (±1/2 LSB).

2. This value is indicated as a ratio (%FSR) to the full-scale value.

3. When $AV_{REFP} < V_{DD}$, the MAX. values are as follows.

Overall error:	Add ±4 LSB to the MAX. value when $AV_{REFP} = V_{DD}$.
Zero-scale error/Full-scale error:	Add ±0.2%FSR to the MAX. value when $AV_{REFP} = V_{DD}$.
Integral linearity error/ Differential linearity error:	Add ±2 LSB to the MAX. value when $AV_{REFP} = V_{DD}$.

4. See **33.6.2 Temperature sensor/internal reference voltage characteristics**.

(2) When reference voltage (+) = V_{DD} (ADREFP1 = 0, ADREFP0 = 0), reference voltage (–) = V_{SS} (ADREFM = 0), target pins: ANI0, ANI1, ANI16 to ANI25, internal reference voltage, and temperature sensor output voltage

(T_A = –40 to +105°C, 2.4 V ≤ V_{DD} ≤ 5.5 V, V_{SS} = 0 V, Reference voltage (+) = V_{DD}, Reference voltage (–) = V_{SS})

Parameter	Symbol	Conditions		MIN.	TYP.	MAX.	Unit
Resolution	RES			8		10	bit
Overall error[Note 1]	AINL	10-bit resolution	2.4 V ≤ V_{DD} ≤ 5.5 V		1.2	±7.0	LSB
Conversion time	t_{CONV}	10-bit resolution Target pin: ANI0, ANI1, ANI16 to ANI25	3.6 V ≤ V_{DD} ≤ 5.5 V	2.125		39	μs
			2.7 V ≤ V_{DD} ≤ 5.5 V	3.1875		39	μs
			2.4 V ≤ V_{DD} ≤ 5.5 V	17		39	μs
		10-bit resolution Target pin: Internal reference voltage, and temperature sensor output voltage (HS (high-speed main) mode)	3.6 V ≤ V_{DD} ≤ 5.5 V	2.375		39	μs
			2.7 V ≤ V_{DD} ≤ 5.5 V	3.5625		39	μs
			2.4 V ≤ V_{DD} ≤ 5.5 V	17		39	μs
Zero-scale error[Notes 1, 2]	E_{ZS}	10-bit resolution	2.4 V ≤ V_{DD} ≤ 5.5 V			±0.60	%FSR
Full-scale error[Notes 1, 2]	E_{FS}	10-bit resolution	2.4 V ≤ V_{DD} ≤ 5.5 V			±0.60	%FSR
Integral linearity error[Note 1]	ILE	10-bit resolution	2.4 V ≤ V_{DD} ≤ 5.5 V			±4.0	LSB
Differential linearity error[Note 1]	DLE	10-bit resolution	2.4 V ≤ V_{DD} ≤ 5.5 V			±2.0	LSB
Analog input voltage	V_{AIN}	ANI0, ANI1, ANI16 to ANI25		0		V_{DD}	V
		Internal reference voltage (2.4 V ≤ V_{DD} ≤ 5.5 V, HS (high-speed main) mode))		V_{BGR}[Note 3]			V
		Temperature sensor output voltage (2.4 V ≤ V_{DD} ≤ 5.5 V, HS (high-speed main) mode))		V_{TMPS25}[Note 3]			V

Notes 1. Excludes quantization error (±1/2 LSB).

2. This value is indicated as a ratio (%FSR) to the full-scale value.

3. See **33.6.2 Temperature sensor/internal reference voltage characteristics**.

(3) When reference voltage (+) = internal reference voltage (ADREFP1 = 1, ADREFP0 = 0), reference voltage (–) = AVREFM/ANI1 (ADREFM = 1), target pins: ANI0, ANI16 to ANI25

(T_A = –40 to +105°C, 2.4 V ≤ V_{DD} ≤ 5.5 V, V_{SS} = 0 V, Reference voltage (+) = V_{BGR}[Note 3],
Reference voltage (–) = AV_{REFM}[Note 4] = 0 V, HS (high-speed main) mode)

Parameter	Symbol	Conditions		MIN.	TYP.	MAX.	Unit
Resolution	RES				8		bit
Conversion time	t_{CONV}	8-bit resolution	2.4 V ≤ V_{DD} ≤ 5.5 V	17		39	μs
Zero-scale error[Notes 1, 2]	E_{ZS}	8-bit resolution	2.4 V ≤ V_{DD} ≤ 5.5 V			±0.60	%FSR
Integral linearity error[Note 1]	ILE	8-bit resolution	2.4 V ≤ V_{DD} ≤ 5.5 V			±2.0	LSB
Differential linearity error[Note 1]	DLE	8-bit resolution	2.4 V ≤ V_{DD} ≤ 5.5 V			±1.0	LSB
Analog input voltage	V_{AIN}			0		V_{BGR}[Note 3]	V

Notes 1. Excludes quantization error (±1/2 LSB).

2. This value is indicated as a ratio (%FSR) to the full-scale value.

3. See **33.6.2 Temperature sensor/internal reference voltage characteristics**.

4. When reference voltage (–) = V_{SS}, the MAX. values are as follows.

Zero-scale error: Add ±0.35%FSR to the AV_{REFM} MAX. value.

Integral linearity error: Add ±0.5 LSB to the AV_{REFM} MAX. value.

Differential linearity error: Add ±0.2 LSB to the AV_{REFM} MAX. value.

33.6.2 Temperature sensor/internal reference voltage characteristics

(T_A = –40 to +105°C, 2.4 V ≤ V_{DD} ≤ 5.5 V, V_{SS} = 0 V, HS (high-speed main) mode)

Parameter	Symbol	Conditions	MIN.	TYP.	MAX.	Unit
Temperature sensor output voltage	V_{TMPS25}	ADS register = 80H, T_A = +25°C		1.05		V
Internal reference output voltage	V_{BGR}	ADS register = 81H	1.38	1.45	1.5	V
Temperature coefficient	F_{VTMPS}	Temperature sensor that depends on the temperature		–3.6		mV/°C
Operation stabilization wait time	t_{AMP}				5	μs

33.6.3 Comparator

(T_A = –40 to +105°C, 2.4 V ≤ V_{DD} ≤ 5.5 V, V_{SS} = 0 V)

Parameter	Symbol	Conditions		MIN.	TYP.	MAX.	Unit
Input voltage range	Ivref			0		V_{DD} – 1.4	V
	Ivcmp			–0.3		V_{DD} + 0.3	V
Output delay	td	V_{DD} = 3.0 V Input slew rate > 50 mV/μs	Comparator high-speed mode, standard mode			1.2	μs
			Comparator high-speed mode, window mode			2.0	μs
			Comparator low-speed mode, standard mode		3.0	5.0	μs
High-electric-potential reference voltage	VTW+	Comparator high-speed mode, window mode		0.66V_{DD}	0.76V_{DD}	0.86V_{DD}	V
Low-electric-potential reference voltage	VTW–	Comparator high-speed mode, window mode		0.14V_{DD}	0.24V_{DD}	0.34V_{DD}	V
Operation stabilization wait time	t_{CMP}			100			μs
Internal reference output voltage[Note]	V_{BGR}	2.4 V ≤ V_{DD} ≤ 5.5 V, HS (high-speed main) mode		1.38	1.45	1.50	V

Note Cannot be used in subsystem clock operation and STOP mode.

33.6.4 POR circuit characteristics

(T_A = –40 to +105°C, V_{SS} = 0 V)

Parameter	Symbol	Conditions	MIN.	TYP.	MAX.	Unit
Detection voltage	V_{POR}	The power supply voltage is rising.	1.45	1.51	1.57	V
	V_{PDR}	The power supply voltage is falling.	1.44	1.50	1.56	V
Minimum pulse width[Note]	T_{PW}		300			μs

Note This is the time required for the POR circuit to execute a reset operation when V_{DD} falls below V_{PDR}. When the microcontroller enters STOP mode and when the main system clock (f_{MAIN}) has been stopped by setting bit 0 (HIOSTOP) and bit 7 (MSTOP) of the clock operation status control register (CSC), this is the time required for the POR circuit to execute a reset operation between when V_{DD} falls below 0.7 V and when V_{DD} rises to V_{POR} or higher.

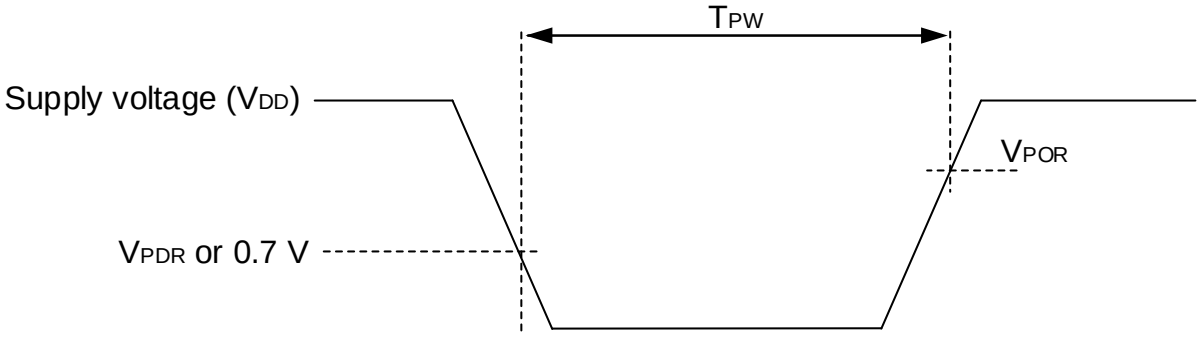

33.6.5 LVD circuit characteristics

LVD Detection Voltage of Reset Mode and Interrupt Mode

(T_A = –40 to +105°C, $V_{PDR} \le V_{DD} \le$ 5.5 V, V_{SS} = 0 V)

Parameter		Symbol	Conditions	MIN.	TYP.	MAX.	Unit
Detection voltage	Supply voltage level	V_{LVD0}	When power supply rises	3.90	4.06	4.22	V
			When power supply falls	3.83	3.98	4.13	V
		V_{LVD1}	When power supply rises	3.60	3.75	3.90	V
			When power supply falls	3.53	3.67	3.81	V
		V_{LVD2}	When power supply rises	3.01	3.13	3.25	V
			When power supply falls	2.94	3.06	3.18	V
		V_{LVD3}	When power supply rises	2.90	3.02	3.14	V
			When power supply falls	2.85	2.96	3.07	V
		V_{LVD4}	When power supply rises	2.81	2.92	3.03	V
			When power supply falls	2.75	2.86	2.97	V
		V_{LVD5}	When power supply rises	2.71	2.81	2.92	V
			When power supply falls	2.64	2.75	2.86	V
		V_{LVD6}	When power supply rises	2.61	2.71	2.81	V
			When power supply falls	2.55	2.65	2.75	V
		V_{LVD7}	When power supply rises	2.51	2.61	2.71	V
			When power supply falls	2.45	2.55	2.65	V
Minimum pulse width		t_{LW}		300			μs
Detection delay time						300	μs

LVD Detection Voltage of Interrupt & Reset Mode

(T_A = –40 to +105°C, $V_{PDR} \le V_{DD} \le$ 5.5 V, V_{SS} = 0 V)

Parameter	Symbol	Conditions			MIN.	TYP.	MAX.	Unit
Interrupt and reset mode	V_{LVD5}	V_{POC2}, V_{POC1}, V_{POC0} = 0, 1, 1, falling reset voltage			2.64	2.75	2.86	V
	V_{LVD4}		LVIS1, LVIS0 = 1, 0	Rising release reset voltage	2.81	2.92	3.03	V
				Falling interrupt voltage	2.75	2.86	2.97	V
	V_{LVD3}		LVIS1, LVIS0 = 0, 1	Rising release reset voltage	2.90	3.02	3.14	V
				Falling interrupt voltage	2.85	2.96	3.07	V
	V_{LVD0}		LVIS1, LVIS0 = 0, 0	Rising release reset voltage	3.90	4.06	4.22	V
				Falling interrupt voltage	3.83	3.98	4.13	V

33.6.6 Supply voltage rise time

(T_A = –40 to +105°C, V_{SS} = 0 V)

Parameter	Symbol	Conditions	MIN.	TYP.	MAX.	Unit
V_{DD} rise slope	SV_{DD}				54	V/ms

Caution Make sure to keep the internal reset state by the LVD circuit or an external reset until V_{DD} reaches the operating voltage range shown in 33.4 AC Characteristics.

33.7 LCD Characteristics

33.7.1 External resistance division method

(1) Static display mode

(T_A = –40 to +105°C, V_{L4} (MIN.) ≤ V_{DD} ≤ 5.5 V, V_{SS} = 0 V)

Parameter	Symbol	Conditions	MIN.	TYP.	MAX.	Unit
LCD drive voltage	V_{L4}		2.0		V_{DD}	V

(2) 1/2 bias method, 1/4 bias method

(T_A = –40 to +105°C, V_{L4} (MIN.) ≤ V_{DD} ≤ 5.5 V, V_{SS} = 0 V)

Parameter	Symbol	Conditions	MIN.	TYP.	MAX.	Unit
LCD drive voltage	V_{L4}		2.7		V_{DD}	V

(3) 1/3 bias method

(T_A = –40 to +105°C, V_{L4} (MIN.) ≤ V_{DD} ≤ 5.5 V, V_{SS} = 0 V)

Parameter	Symbol	Conditions	MIN.	TYP.	MAX.	Unit
LCD drive voltage	V_{L4}		2.5		V_{DD}	V

33.7.2 Internal voltage boosting method

(1) 1/3 bias method

(T_A = –40 to +105°C, 2.4 V ≤ V_{DD} ≤ 5.5 V, V_{SS} = 0 V)

Parameter	Symbol	Conditions		MIN.	TYP.	MAX.	Unit
LCD output voltage variation range	V_{L1}	C1 to C4[Note 1] = 0.47 μF[Note 2]	VLCD = 04H	0.90	1.00	1.08	V
			VLCD = 05H	0.95	1.05	1.13	V
			VLCD = 06H	1.00	1.10	1.18	V
			VLCD = 07H	1.05	1.15	1.23	V
			VLCD = 08H	1.10	1.20	1.28	V
			VLCD = 09H	1.15	1.25	1.33	V
			VLCD = 0AH	1.20	1.30	1.38	V
			VLCD = 0BH	1.25	1.35	1.43	V
			VLCD = 0CH	1.30	1.40	1.48	V
			VLCD = 0DH	1.35	1.45	1.53	V
			VLCD = 0EH	1.40	1.50	1.58	V
			VLCD = 0FH	1.45	1.55	1.63	V
			VLCD = 10H	1.50	1.60	1.68	V
			VLCD = 11H	1.55	1.65	1.73	V
			VLCD = 12H	1.60	1.70	1.78	V
			VLCD = 13H	1.65	1.75	1.83	V
Doubler output voltage	V_{L2}	C1 to C4[Note 1] = 0.47 μF		2 V_{L1} – 0.10	2 V_{L1}	2 V_{L1}	V
Tripler output voltage	V_{L4}	C1 to C4[Note 1] = 0.47 μF		3 V_{L1} – 0.15	3 V_{L1}	3 V_{L1}	V
Reference voltage setup time[Note 2]	t_{VWAIT1}			5			ms
Voltage boost wait time[Note 3]	t_{VWAIT2}	C1 to C4[Note 1] = 0.47 μF		500			ms

Notes 1. This is a capacitor that is connected between voltage pins used to drive the LCD.
C1: A capacitor connected between CAPH and CAPL
C2: A capacitor connected between V_{L1} and GND
C3: A capacitor connected between V_{L2} and GND
C4: A capacitor connected between V_{L4} and GND
C1 = C2 = C3 = C4 = 0.47 μF ± 30%

2. This is the time required to wait from when the reference voltage is specified by using the VLCD register (or when the internal voltage boosting method is selected (by setting the MDSET1 and MDSET0 bits of the LCDM0 register to 01B) if the default value reference voltage is used) until voltage boosting starts (VLCON = 1).

3. This is the wait time from when voltage boosting is started (VLCON = 1) until display is enabled (LCDON = 1).

(2) 1/4 bias method

(T_A = –40 to +105°C, 2.4 V ≤ V_{DD} ≤ 5.5 V, V_{SS} = 0 V)

Parameter	Symbol	Conditions		MIN.	TYP.	MAX.	Unit
LCD output voltage variation range	V_{L1}	C1 to C5[Note 1] = 0.47 μF[Note 2]	VLCD = 04H	0.90	1.00	1.08	V
			VLCD = 05H	0.95	1.05	1.13	V
			VLCD = 06H	1.00	1.10	1.18	V
			VLCD = 07H	1.05	1.15	1.23	V
			VLCD = 08H	1.10	1.20	1.28	V
			VLCD = 09H	1.15	1.25	1.33	V
			VLCD = 0AH	1.20	1.30	1.38	V
Doubler output voltage	V_{L2}	C1 to C5[Note 1] = 0.47 μF		2 V_{L1} – 0.08	2 V_{L1}	2 V_{L1}	V
Tripler output voltage	V_{L3}	C1 to C5[Note 1] = 0.47 μF		3 V_{L1} – 0.12	3 V_{L1}	3 V_{L1}	V
Quadruply output voltage	V_{L4}	C1 to C5[Note 1] = 0.47 μF		4 V_{L1} – 0.16	4 V_{L1}	4 V_{L1}	V
Reference voltage setup time[Note 2]	t_{VWAIT1}			5			ms
Voltage boost wait time[Note 3]	t_{VWAIT2}	C1 to C5[Note 1] = 0.47 μF		500			ms

Notes 1. This is a capacitor that is connected between voltage pins used to drive the LCD.

C1: A capacitor connected between CAPH and CAPL

C2: A capacitor connected between V_{L1} and GND

C3: A capacitor connected between V_{L2} and GND

C4: A capacitor connected between V_{L3} and GND

C5: A capacitor connected between V_{L4} and GND

C1 = C2 = C3 = C4 = C5 = 0.47 μF ± 30%

2. This is the time required to wait from when the reference voltage is specified by using the VLCD register (or when the internal voltage boosting method is selected (by setting the MDSET1 and MDSET0 bits of the LCDM0 register to 01B) if the default value reference voltage is used) until voltage boosting starts (VLCON = 1).

3. This is the wait time from when voltage boosting is started (VLCON = 1) until display is enabled (LCDON = 1).

33.7.3 Capacitor split method

(1) 1/3 bias method

(T_A = –40 to +105°C, 2.4 V ≤ V_{DD} ≤ 5.5 V, V_{SS} = 0 V)

Parameter	Symbol	Conditions	MIN.	TYP.	MAX.	Unit
V_{L4} voltage	V_{L4}	C1 to C4 = 0.47 μF[Note 2]		V_{DD}		V
V_{L2} voltage	V_{L2}	C1 to C4 = 0.47 μF[Note 2]	2/3 V_{L4} – 0.1	2/3 V_{L4}	2/3 V_{L4} + 0.1	V
V_{L1} voltage	V_{L1}	C1 to C4 = 0.47 μF[Note 2]	1/3 V_{L4} – 0.1	1/3 V_{L4}	1/3 V_{L4} + 0.1	V
Capacitor split wait time[Note 1]	t_{VWAIT}		100			ms

Notes 1. This is the wait time from when voltage bucking is started (VLCON = 1) until display is enabled (LCDON = 1).

2. This is a capacitor that is connected between voltage pins used to drive the LCD.

C1: A capacitor connected between CAPH and CAPL

C2: A capacitor connected between V_{L1} and GND

C3: A capacitor connected between V_{L2} and GND

C4: A capacitor connected between V_{L4} and GND

C1 = C2 = C3 = C4 = 0.47 pF±30 %

33.8 RAM Data Retention Characteristics

(T_A = –40 to +105°C)

Parameter	Symbol	Conditions	MIN.	TYP.	MAX.	Unit
Data retention supply voltage	V_{DDDR}		1.44 Note		5.5	V

Note This depends on the POR detection voltage. For a falling voltage, data in RAM are retained until the voltage reaches the level that triggers a POR reset but not once it reaches the level at which a POR reset is generated.

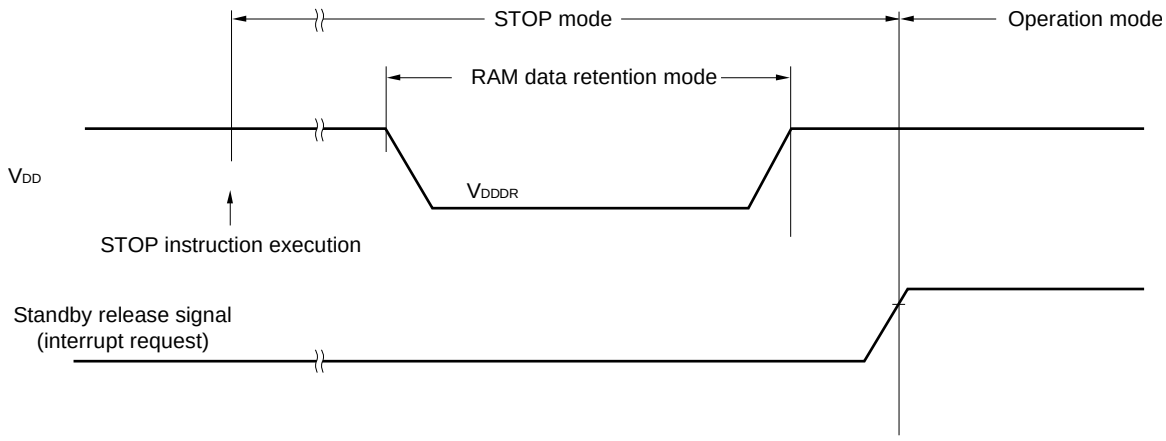

33.9 Flash Memory Programming Characteristics

(T_A = –40 to +105°C, 2.4 V ≤ V_{DD} ≤ 5.5 V, V_{SS} = 0 V)

Parameter	Symbol	Conditions	MIN.	TYP.	MAX.	Unit
System clock frequency	f_{CLK}	2.4 V ≤ V_{DD} ≤ 5.5 V	1		24	MHz
Number of code flash rewrites Notes 1, 2, 3	C_{erwr}	Retained for 20 years T_A = 85°C Note 4	1,000			Times
Number of data flash rewrites Notes 1, 2, 3		Retained for 1 year T_A = 25°C		1,000,000		
		Retained for 5 years T_A = 85°C Note 4	100,000			
		Retained for 20 years T_A = 85°C Note 4	10,000			

Notes 1. 1 erase + 1 write after the erase is regarded as 1 rewrite. The retaining years are until next rewrite after the rewrite.

2. When using flash memory programmer and Renesas Electronics self programming library

3. This characteristic indicates the flash memory characteristic and based on Renesas Electronics reliability test.

4. This temperature is the average value at which data are retained.

Remark When updating data multiple times, use the flash memory as one for updating data.

33.10 Dedicated Flash Memory Programmer Communication (UART)

(T_A = –40 to +105°C, 2.4 V ≤ V_{DD} ≤ 5.5 V, V_{SS} = 0 V)

Parameter	Symbol	Conditions	MIN.	TYP.	MAX.	Unit
Transfer rate		During serial programming	115,200		1,000,000	bps

33.11 Timing Specifications for Switching Flash Memory Programming Modes

(T_A = –40 to +105°C, 2.4 V ≤ V_{DD} ≤ 5.5 V, V_{SS} = 0 V)

Parameter	Symbol	Conditions	MIN.	TYP.	MAX.	Unit
Time to complete the communication for the initial setting after the external reset is released	t_{SUINIT}	POR and LVD reset must be released before the external reset is released.			100	ms
Time to release the external reset after the TOOL0 pin is set to the low level	t_{SU}	POR and LVD reset must be released before the external reset is released.	10			μs
Time to hold the TOOL0 pin at the low level after the external reset is released (excluding the processing time of the firmware to control the flash memory)	t_{HD}	POR and LVD reset must be released before the external reset is released.	1			ms

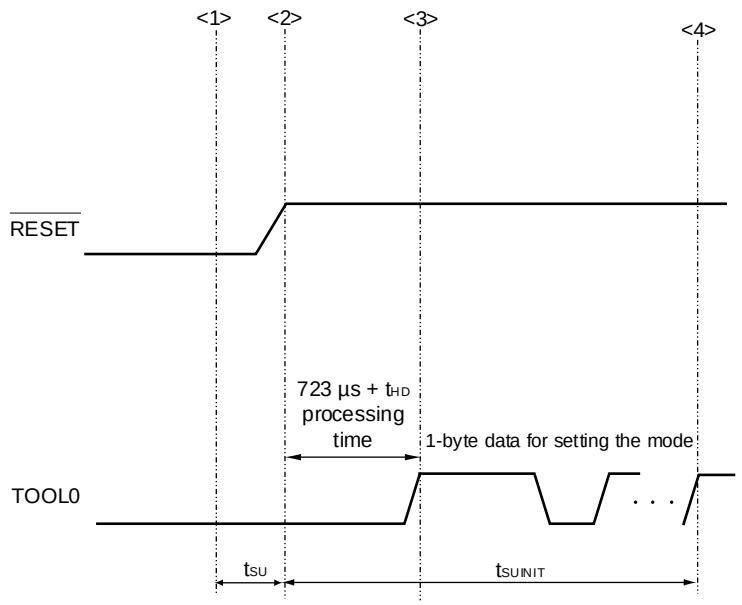

<1> The low level is input to the TOOL0 pin.

<2> The external reset is released (POR and LVD reset must be released before the external reset is released.).

<3> The TOOL0 pin is set to the high level.

<4> Setting of the flash memory programming mode by UART reception and completion the baud rate setting.

Remark t_{SUINIT}: Communication for the initial setting must be completed within 100 ms after the external reset is released during this period.

t_{SU}: Time to release the external reset after the TOOL0 pin is set to the low level

t_{HD}: Time to hold the TOOL0 pin at the low level after the external reset is released (excluding the processing time of the firmware to control the flash memory)

CHAPTER 34 PACKAGE DRAWINGS

34.1 64-pin Products

R5F10WLAAFA, R5F10WLCAFA, R5F10WLDAFA, R5F10WLEAFA, R5F10WLFAFA, R5F10WLGAFA

JEITA Package Code	RENESAS Code	Previous Code	MASS (TYP.) [g]
P-LQFP64-12x12-0.65	PLQP0064JA-A	P64GK-65-UET-2	0.51

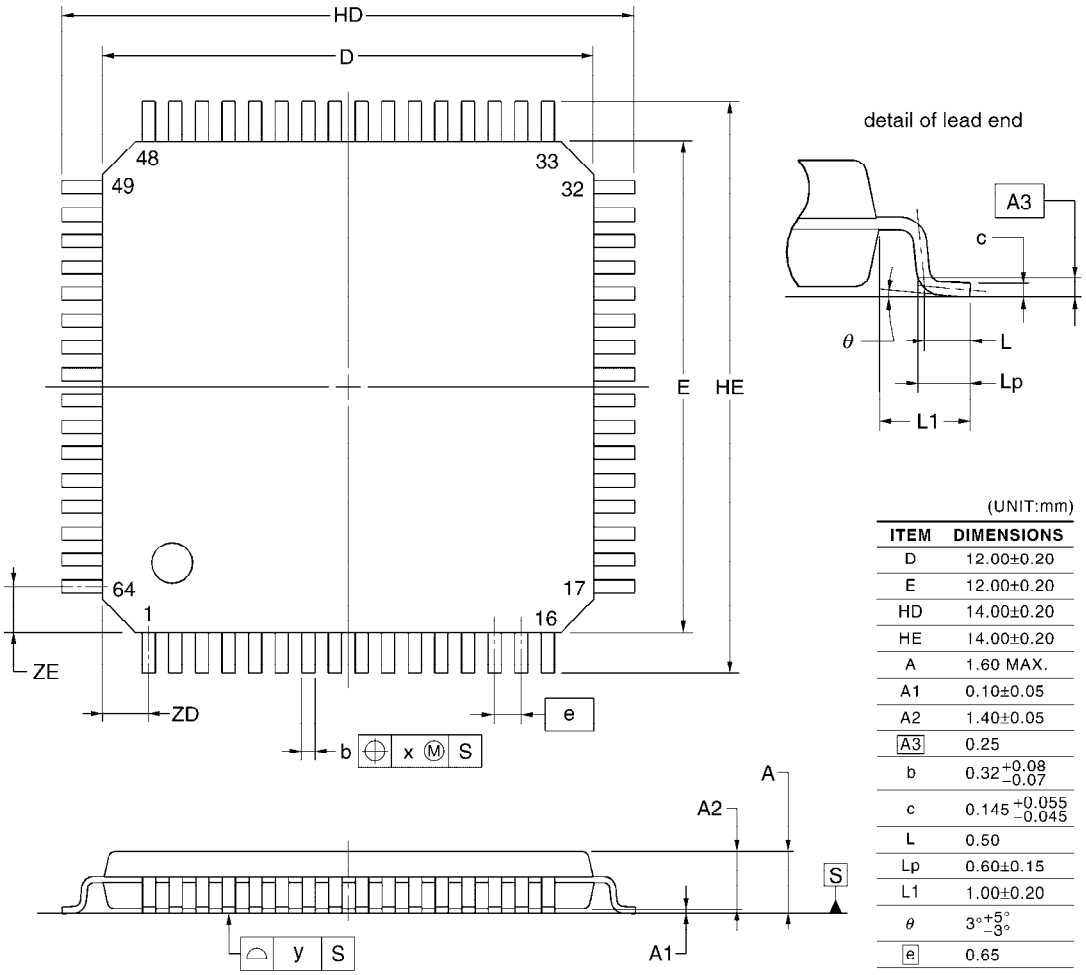

(UNIT:mm)

ITEM	DIMENSIONS
D	12.00±0.20
E	12.00±0.20
HD	14.00±0.20
HE	14.00±0.20
A	1.60 MAX.
A1	0.10±0.05
A2	1.40±0.05
A3	0.25
b	$0.32^{+0.08}_{-0.07}$
c	$0.145^{+0.055}_{-0.045}$
L	0.50
Lp	0.60±0.15
L1	1.00±0.20
θ	$3°^{+5°}_{-3°}$
e	0.65
x	0.13
y	0.10
ZD	1.125
ZE	1.125

NOTE
Each lead centerline is located within 0.13 mm of its true position at maximum material condition.

©2012 Renesas Electronics Corporation. All rights reserved.

<R>

JEITA Package code	RENESAS code	MASS(TYP.)[g]
P-LQFP64-12x12-0.65	PLQP0064JB-A	0.50

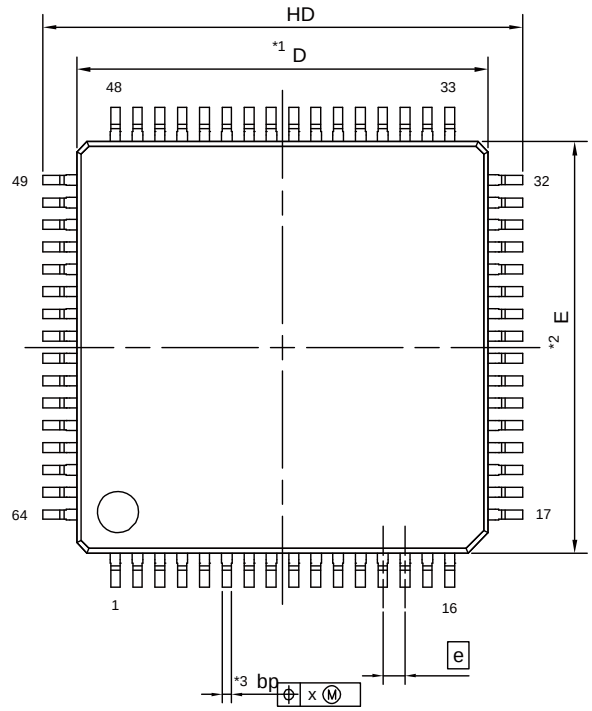

detail of lead end

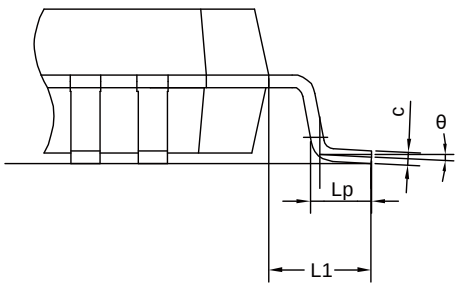

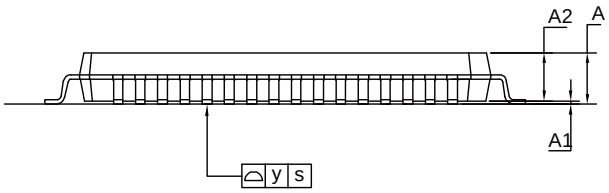

NOTE
1.DIMENSIONS "*1" AND "*2"DO NOT INCLUDE MOLD FLASH.
2.DIMENSION "*3" DOES NOT INCLUDE TRIM OFFSET.

Reference Symbol	Dimension in Millimeters		
	Min.	Nom.	Max.
E	11.90	12.00	12.10
D	11.90	12.00	12.10
A_2	—	1.40	—
H_D	13.80	14.00	14.20
H_E	13.80	14.00	14.20
A	—	—	1.70
A_1	0.05	—	0.15
Lp	0.45	0.60	0.75
L1	—	1.00	—
b_p	0.27	0.32	0.37
c	0.09	—	0.20
e	—	0.65	—
θ	0.00	3.50	8.00
x	—	—	0.08
y	—	—	0.08

R5F10WLAAFB, R5F10WLCAFB, R5F10WLDAFB, R5F10WLEAFB, R5F10WLFAFB, R5F10WLGAFB, R5F10WLAGFB, R5F10WLCGFB, R5F10WLDGFB, R5F10WLEGFB, R5F10WLFGFB, R5F10WLGGFB

JEITA Package Code	RENESAS Code	Previous Code	MASS[Typ.]
P-LFQFP64-10x10-0.50	PLQP0064KB-C	——	0.3g

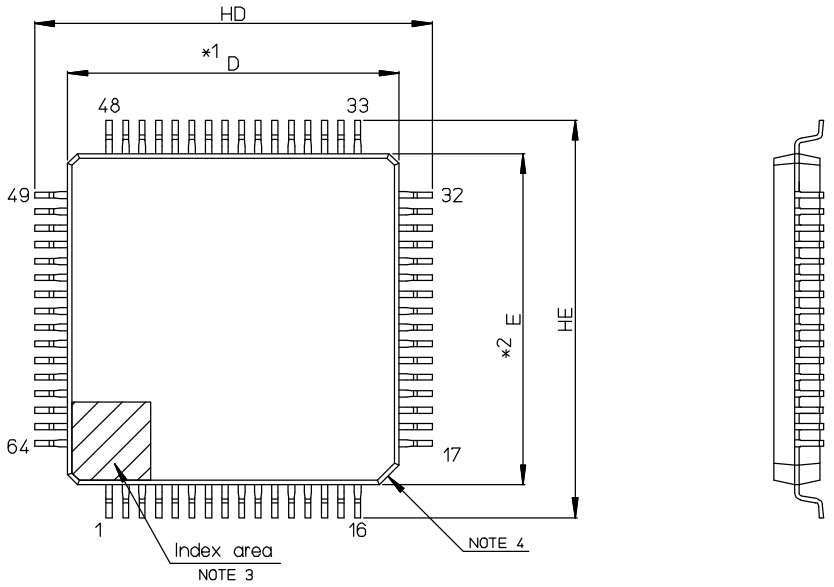

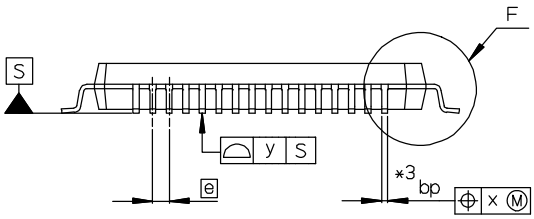

NOTE)
1. DIMENSIONS "*1" AND "*2" DO NOT INCLUDE MOLD FLASH.
2. DIMENSION "*3" DOES NOT INCLUDE TRIM OFFSET.
3. PIN 1 VISUAL INDEX FEATURE MAY VARY, BUT MUST BE LOCATED WITHIN THE HATCHED AREA.
4. CHAMFERS AT CORNERS ARE OPTIONAL; SIZE MAY VARY.

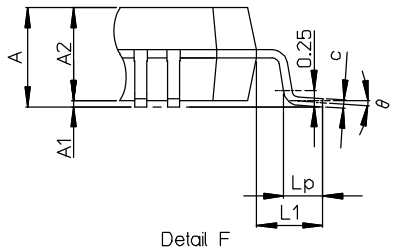

Reference Symbol	Dimension in Millimeters		
	Min	Nom	Max
D	9.9	10.0	10.1
E	9.9	10.0	10.1
A2	——	1.4	——
HD	11.8	12.0	12.2
HE	11.8	12.0	12.2
A	——	——	1.7
A1	0.05	——	0.15
bp	0.15	0.20	0.27
c	0.09	——	0.20
θ	0°	3.5°	8°
e	——	0.5	——
x	——	——	0.08
y	——	——	0.08
Lp	0.45	0.6	0.75
L1	——	1.0	——

JEITA Package code	RENESAS code	MASS(TYP.)[g]
P-LFQFP064-10x10-0.50	PLQP0064KL-A	0.36

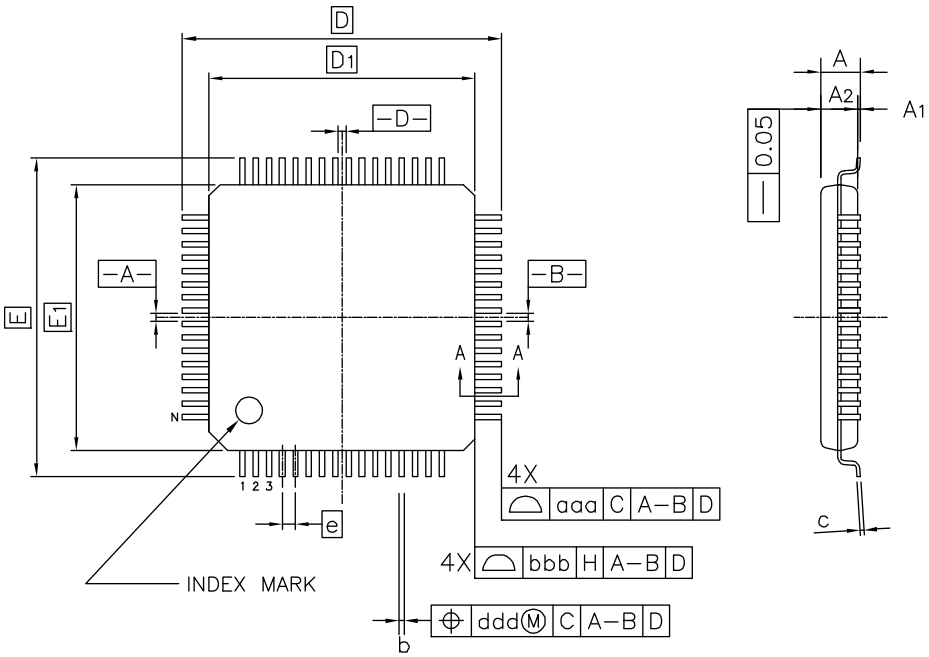

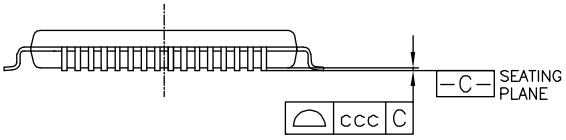

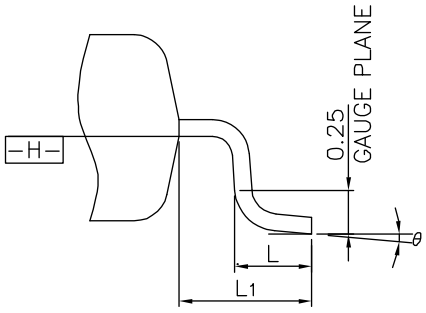

SECTION A–A

Reference Symbol	Dimension in Millimeters		
	Min.	Nom.	Max.
A	–	–	1.60
A_1	0.05	–	0.15
A_2	1.35	1.40	1.45
D	–	12.00	–
D_1	–	10.00	–
E	–	12.00	–
E_1	–	10.00	–
N	–	64	–
e	–	0.50	–
b	0.17	0.22	0.27
c	0.09	–	0.20
θ	0°	3.5°	7°
L	0.45	0.60	0.75
L_1	–	1.00	–
aaa	–	–	0.20
bbb	–	–	0.20
ccc	–	–	0.08
ddd	–	–	0.08

34.2 80-pin Products

R5F10WMAAFA, R5F10WMCAFA, R5F10WMDAFA, R5F10WMEAFA, R5F10WMFAFA, R5F10WMGAFA

JEITA Package Code	RENESAS Code	Previous Code	MASS (TYP.) [g]
P-LQFP80-14x14-0.65	PLQP0080JB-E	P80GC-65-UBT-2	0.69

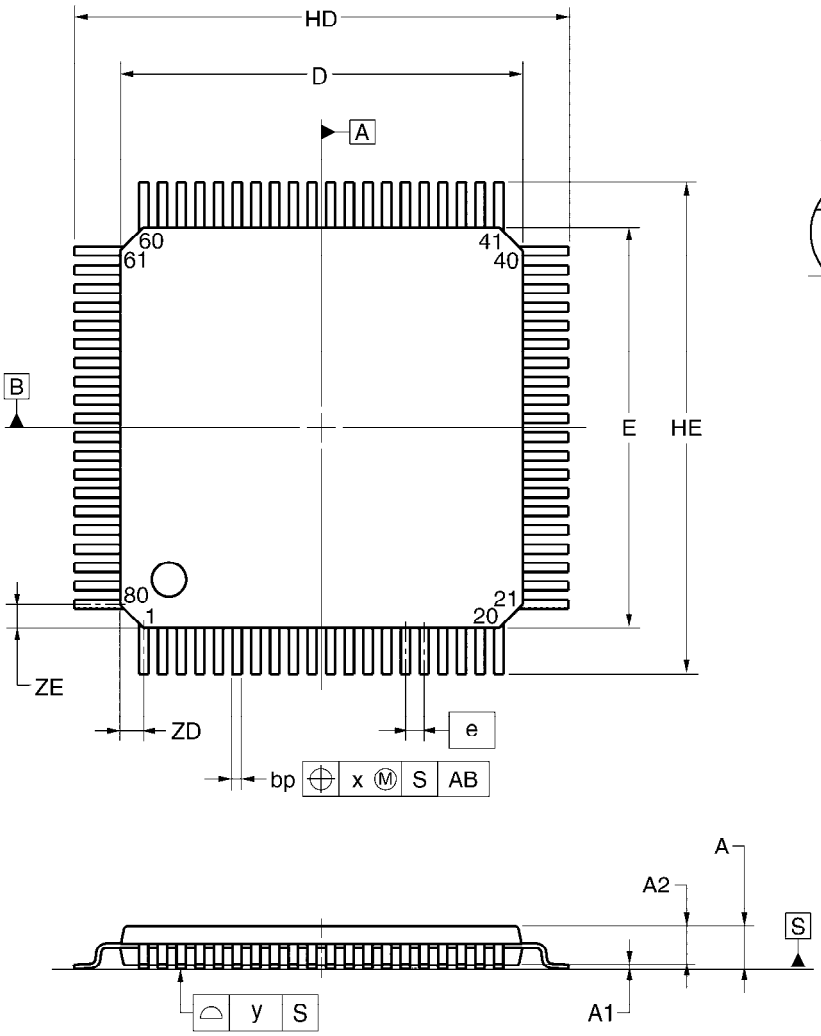

detail of lead end

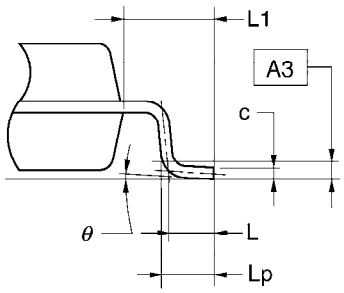

Referance Symbol	Dimension in Millimeters		
	Min	Nom	Max
D	13.80	14.00	14.20
E	13.80	14.00	14.20
HD	17.00	17.20	17.40
HE	17.00	17.20	17.40
A	—	—	1.70
A1	0.05	0.125	0.20
A2	1.35	1.40	1.45
A3	—	0.25	—
bp	0.26	0.32	0.38
c	0.10	0.145	0.20
L	—	0.80	—
Lp	0.736	0.886	1.036
L1	1.40	1.60	1.80
θ	0°	3°	8°
e	—	0.65	—
x	—	—	0.13
y	—	—	0.10
ZD	—	0.825	—
ZE	—	0.825	—

R5F10WMAAFB, R5F10WMCAFB, R5F10WMDAFB, R5F10WMEAFB, R5F10WMFAFB, R5F10WMGAFB, R5F10WMAGFB, R5F10WMCGFB, R5F10WMDGFB, R5F10WMEGFB, R5F10WMFGFB, R5F10WMGGFB

JEITA Package Code	RENESAS Code	Previous Code	MASS (Typ) [g]
P-LFQFP80-12x12-0.50	PLQP0080KB-B	—	0.5

Unit: mm

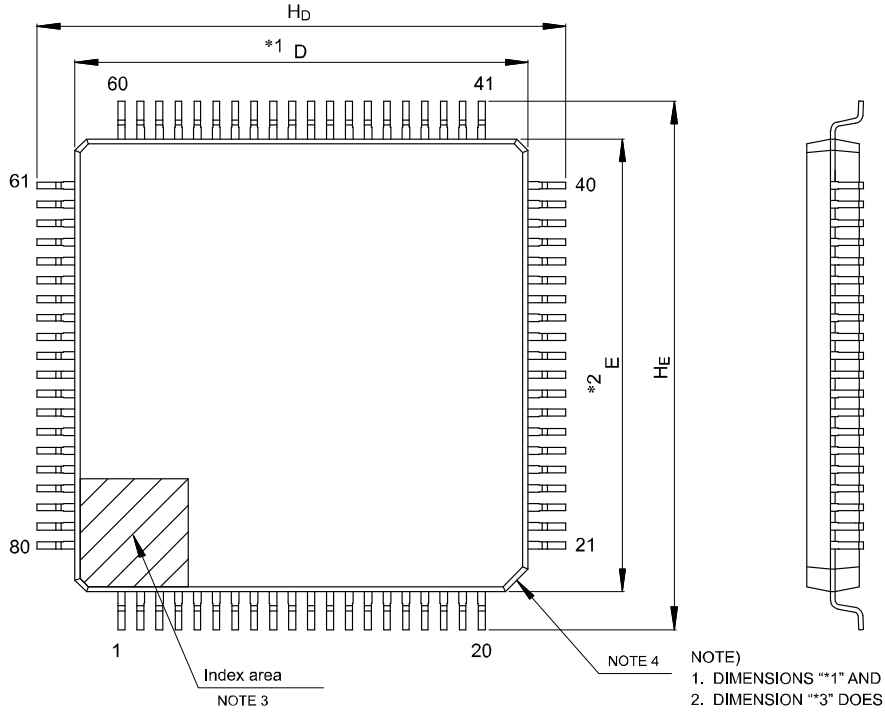

NOTE)
1. DIMENSIONS "*1" AND "*2" DO NOT INCLUDE MOLD FLASH.
2. DIMENSION "*3" DOES NOT INCLUDE TRIM OFFSET.
3. PIN 1 VISUAL INDEX FEATURE MAY VARY, BUT MUST BE LOCATED WITHIN THE HATCHED AREA.
4. CHAMFERS AT CORNERS ARE OPTIONAL, SIZE MAY VARY.

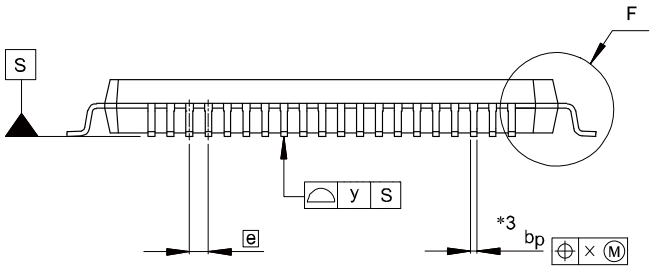

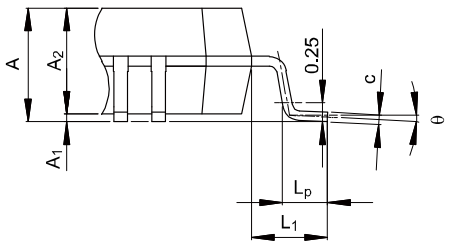

Detail F

Reference Symbol	Dimensions in millimeters		
	Min	Nom	Max
D	11.9	12.0	12.1
E	11.9	12.0	12.1
A_2	—	1.4	—
H_D	13.8	14.0	14.2
H_E	13.8	14.0	14.2
A	—	—	1.7
A_1	0.05	—	0.15
b_p	0.15	0.20	0.27
c	0.09	—	0.20
θ	0°	3.5°	8°
e	—	0.5	—
x	—	—	0.08
y	—	—	0.08
L_p	0.45	0.6	0.75
L_1	—	1.0	—

© 2017 Renesas Electronics Corporation. All rights reserved.

JEITA Package code	RENESAS code	MASS(TYP.)[g]
P-LFQFP80-12x12-0.50	PLQP0080KJ-A	0.49

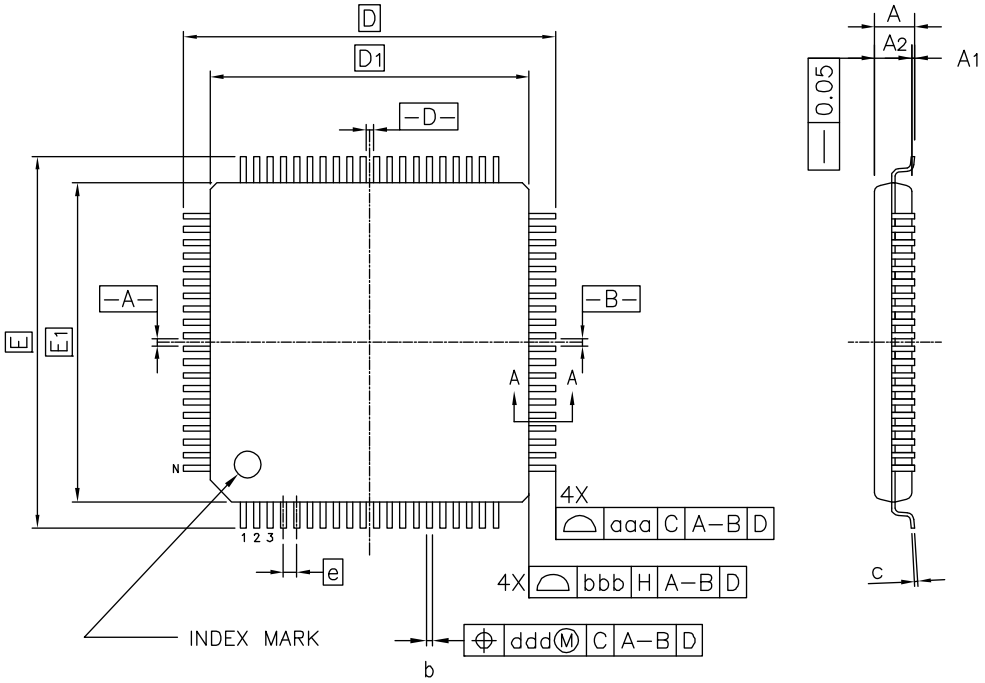

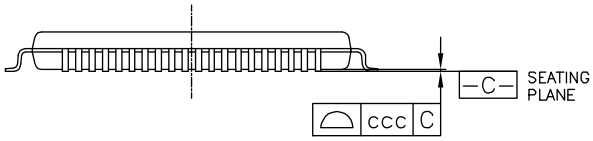

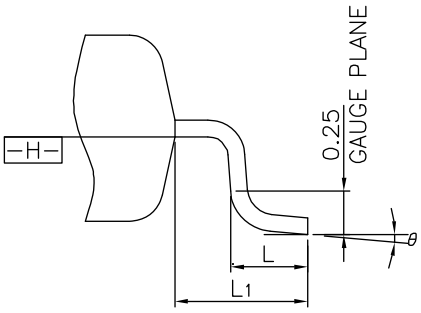

SECTION A–A

Reference Symbol	Dimension in Millimeters		
	Min.	Nom.	Max.
A	–	–	1.60
A_1	0.05	–	0.15
A_2	1.35	1.40	1.45
D	–	14.00	–
D_1	–	12.00	–
E	–	14.00	–
E_1	–	12.00	–
N	–	80	–
e	–	0.50	–
b	0.17	0.22	0.27
c	0.09	–	0.20
θ	0°	3.5°	7°
L	0.45	0.60	0.75
L_1	–	1.00	–
aaa	–	–	0.20
bbb	–	–	0.20
ccc	–	–	0.08
ddd	–	–	0.08

APPENDIX A REVISION HISTORY

A.1 Major Revisions in This Edition

(1/2)

Page	Description	Classification
All		
-	"3-Wire Serial I/O" and "3-wire serial" were modified to " Simplified SPI"	(c)
-	The module name for CSI was changed to Simplified SPI	(c)
-	"wait" for IIC was modified to "clock stretch"	(c)
CHAPTER 1 OUTLINE		
p.2	Addition of Note 1 in 1 Features	(c)
p.6	Modification of Figure in 1.3.1 64-pin products	(c)
p.7, 8	Addition of Table 1-1. Alternate function of 64-pin products	(c)
p.9	Modification of Figure in 1.3.2 80-pin products	(c)
p.10 to 12	Addition of Table 1-2. Alternate function of 80-pin products	(c)
CHAPTER 4 PORT FUNCTIONS		
p.124	Addition of Note in 4.4.4 Handling different potential (1.8 V, 2.5 V, 3 V) by using I/O buffers	(c)
p.127	Addition of Remark in 4.5.2 Register settings for alternate function whose output function is not used	(c)
CHAPTER 5 CLOCK GENERATOR		
p.153	Modification of Figure 5-1. Block Diagram of Clock Generator	(c)
p.168	Modification of Caution 3 in Figure 5-10. Format of High-speed On-chip Oscillator Frequency Select Register (HOCODIV)	(c)
CHAPTER 6 TIMER ARRAY UNIT		
p.208	Modification of Remark 2 in Figure 6-11. Format of Timer Clock Select Register m (TPSm) (1/2)	(c)
p.237	Modification of Figure 6-30. Operation Timing (In One-count Mode)	(c)
p.262	Modification of Figure 6-52. Example of Basic Timing of Operation as Input Pulse Interval Measurement (MDmn0 = 0)	(c)
CHAPTER 8 REAL-TIME CLOCK 2		
p.403	Modification of description in Figure 8-6. Format of Real-time Clock Control Register 1 (RTCC1) (3/3)	(c)
p.418	Modification of description in 8.4.3 Reading real-time clock 2 counter	(c)
p.418	Modification of Note 2 in Figure 8-20. Procedure for Reading Real-time Clock 2	(c)
p.419	Addition of Figure 8-21. Procedure for Reading Real-time Clock 2 (When the Alarm Interrupt is in Use)	(c)
p.420	Modification of description in 8.4.4 Writing to real-time clock 2 counter	(c)
p.420	Modification of Note 2, Caution 2 and Remark in Figure 8-22. Procedure for Writing Real-time Clock 2 Counter	(c)
p.421, 422	Addition of Figure 8-23. Procedure for Writing Real-time Clock 2 (When the Alarm Interrupt is in Use)	(c)

Remark "Classification" in the above table classifies revisions as follows.
(a): Error correction, (b): Addition/change of specifications, (c): Addition/change of description or note, (d): Addition/change of package, part number, or management division, (e): Addition/change of related documents

(2/2)

Page	Description	Classification
CHAPTER 12 A/D CONVERTER		
p.469	Addition of Note 2 in Figure 12-11. Format of Analog Input Channel Specification Register (ADS)	(c)
CHAPTER 14 SERIAL ARRAY UNIT		
p.507	Addition of Note in CHAPTER 14 SERIAL ARRAY UNIT	(c)
p.526	Addition of Caution 2 in Figure 14-11. Format of Serial Status Register mn (SSRmn) (1/2)	(c)
p.527	Addition of Caution in Figure 14-11. Format of Serial Status Register mn (SSRmn) (2/2)	(c)
CHAPTER 15 SERIAL INTERFACE IICA		
p.673	Modification of Caution 1 in Figure 15-5. Format of Peripheral Enable Register 0 (PER0)	(c)
CHAPTER 18 DMA CONTROLLER		
p.840	Addition of Note in 18.5.1 Simplified SPI (CSI) consecutive transmission	(c)
CHAPTER 32 ELECTRICAL SPECIFICATIONS (T_A = –40 to +85°C)		
p.1021	Modification of Note 1 and Note 4 in 32.3.2 Supply current characteristics (T_A = –40 to +85°C, 1.6 V ≤ V_{DD} ≤ 5.5 V, V_{SS} = 0 V) (1/2)	(c)
p.1023	Modification of Note 1 and Note 5, deletion of Note 6 in 32.3.2 Supply current characteristics (T_A = –40 to +85°C, 1.6 V ≤ V_{DD} ≤ 5.5 V, V_{SS} = 0 V) (2/2)	(c)
CHAPTER 33 ELECTRICAL SPECIFICATIONS (TA = –40 to +105°C)		
p.1085	Modification of Note 1 and Note 4 in 33.3.2 Supply current characteristics (T_A = –40 to +105°C, 2.4 V ≤ V_{DD} ≤ 5.5 V, V_{SS} = 0 V) (1/2)	(c)
p.1087	Modification of Note 1 and Note 5, deletion of Note 6 in 33.3.2 Supply current characteristics (T_A = –40 to +105°C, 2.4 V ≤ V_{DD} ≤ 5.5 V, V_{SS} = 0 V) (2/2)	(c)
CHAPTER 34 PACKAGE DRAWINGS		
p.1128	Modification of package drawing (PLQP0064JB-A).	(a)

Remark "Classification" in the above table classifies revisions as follows.
(a): Error correction, (b): Addition/change of specifications, (c): Addition/change of description or note, (d): Addition/change of package, part number, or management division, (e): Addition/change of related documents

A.2 Revision History of Preceding Editions

Here is the revision history of the preceding editions. Chapter indicates the chapter of each edition.

(1/14)

Edition	Description	Chapter
Rev.2.21	Modification of Figure 1-1. Part Number, Memory Size, and Package of RL78/L13	**CHAPTER 1 OUTLINE**
	Addition of Remark in Figure 21-6. When the Interrupt Request Signal is not Generated in the SNOOZE Mode	**CHAPTER 21 STANDBY FUNCTION**
	Addition of package drawing (PLQP0064JB-A)	**CHAPTER 34 PACKAGE DRAWINGS**
	Modification of package drawing (PLQP0064KB-C)	
	Addition of package drawing (PLQP0064KL-A)	
	Modification of package drawing (PLQP0080KB-B)	
	Addition of package drawing (PLQP0080KJ-A)	
Rev.2.20	Modification of Figure 1-1. Part Number, Memory Size, and Package of RL78/L13	**CHAPTER 1 OUTLINE**
	Modification of Figure 2-7. Pin Block Diagram for Pin Type 7-5-5	**CHAPTER 2 PIN FUNCTIONS**
	Modification of Note 1 for Figure 3-6. Memory Map (R5F10WLG, R5F10WMG)	**CHAPTER 3 CPU ARCHITECTURE**
	Deletion of a note in Figure 3-8. Correspondence Between Data Memory and Addressing	
	Register direct addressing was changed to Register indirect addressing.	
	Modification of Figure 3-39. Example of CALL, CALLT, and <2>	
	Modification of Remark for Figure 5-14. Examples of Incorrect Resonator Connection (1/2)	**CHAPTER 5 CLOCK GENERATOR**
	Modification of 5.4.4 Low-speed on-chip oscillator	
	Modification of Figure 6-33. Status Transition from Timer Output Setting to Operation Start	**CHAPTER 6 TIMER ARRAY UNIT**
	Modification of Figure 6-47. Block Diagram of Operation as External Event Counter	
	Modification of Figure 6-51. Block Diagram of Operation as Input Pulse Interval Measurement	
	Modification of (1) Using external interrupts (INTP0 to INTP7) in 7.9.2 Cautions when using the counter restart trigger	**CHAPTER 7 16-BIT TIMER KB20**
	Modification of Table 11-3. Setting of Overflow Time of Watchdog Timer	**CHAPTER 11 WATCHDOG TIMER**
	Modification of 11.1 Functions of Watchdog Timer	
	Modification of Table 11-4. Setting Window Open Period of Watchdog Timer	
	Modification of Table 11-5. Setting of Watchdog Timer Interval Interrupt	
	Modification of Note 1 for Figure 12-4. Timing Chart When A/D Voltage Comparator Is Used	**CHAPTER 12 A/D CONVERTER**
	Modification of Figure 14-11. Format of Serial Status Register mn (SSRmn) (1/2)	**CHAPTER 14 SERIAL ARRAY UNIT**
	Modification of Caution in 14.3.14 Serial standby control register m (SSCm)	
	Modification of Figure 14-83. Flowchart of UART Transmission (in Continuous Transmission Mode)	
	Modification of Note 2 for Figure 14-84. Example of Contents of Registers for UART Reception of UART (UART0 to UART3) (80-pin products) (1/2)	
	Modification of Figure 16-1. Block Diagram of LCD Controller/Driver	**CHAPTER 16 LCD CONTROLLER/DRIVER**
	Modification of 16. 3 Registers Controlling LCD Controller/Driver	
	Modification of Figure 16-17. External Resistance Division Method Setting Procedure	
	Modification of Figure 16-25. Voltages and Phases of Common and Segment Signals (3/3)	
	Modification of Caution 2 for Figure 19-2. Format of Interrupt Request Flag Registers (IF0L, IF0H, IF1L, IF1H, IF2L, IF2H, IF3L) (2/2)	**CHAPTER 19 INTERRUPT FUNCTIONS**
	Modification of 19.3.3 Priority specification flag registers (PR00L, PR00H, PR01L, PR01H, PR02L, PR02H, PR03L, PR10L, PR10H, PR11L, PR11H, PR12L, PR12H, PR13L)	

(2/14)

Edition	Description	Chapter
Rev.2.20	Modification of Figure 19-8. Interrupt Request Acknowledgment Timing (Minimum Time)	**CHAPTER 19 INTERRUPT FUNCTIONS**
	Modification of 19.4.3 Multiple interrupt servicing	
	Modification of Figure 21-6. When the Interrupt Request Signal is not Generated in the SNOOZE Mode	**CHAPTER 21 STANDBY FUNCTION**
	Modification of Table 22-1. Operation Statuses During Reset Period	**CHAPTER 22 RESET FUNCTION**
	Modification of Figure 23-2. Timing of Generation of Internal Reset Signal by Power-on-reset Circuit and Voltage Detector (1/3)	**CHAPTER 23 POWER-ON-RESET CIRCUIT**
	Modification of Note 3 for Figure 23-2. Timing of Generation of Internal Reset Signal by Power-on-reset Circuit and Voltage Detector (2/3)	
	Modification of Figure 24-7. Timing of Voltage Detector Reset Signal and Interrupt Signal Generation (Option Byte LVIMDS1, LVIMDS0 = 1, 0) (1/2) and addition of Note 3	**CHAPTER 24 VOLTAGE DETECTOR**
	Modification of Figure 24-7 Timing of Voltage Detector Reset Signal and Interrupt Signal Generation (Option Byte LVIMDS1, LVIMDS0 = 1, 0) (2/2) and addition of Note 3	
	Addition of Figure 24-9. Initial Setting of Interrupt and Reset Mode	
	Modification of Table 26-1. Regulator Output Voltage Conditions	**CHAPTER 26 REGULATOR**
	Modification of Figure 27-1. Format of User Option Byte (000C0H/010C0H)	**CHAPTER 27 OPTION BYTE**
	Addition of PG-FP6 and deletion of FL-PR5, and addition of E2, E2 Lite, and E20	**CHAPTER 28 FLASH MEMORY**
	Modification of 28.1 Serial Programming Using Flash Memory Programmer	
	Modification of Table 28-1. Wiring Between RL78 Microcontroller and Dedicated Flash Memory Programmer	
	Modification of Figure 28-1. Environment for Writing Program to Flash Memory	
	Modification of Figure 28-2. Communication with Dedicated Flash Memory Programmer	
	Modification of Table 28-2. Pin Connection	
	Modification of Figure 28-4. Communication with External Device	
	Addition of Note in 28.3.6 Power supply	
	Modification of Figure 28-7. Setting of Flash Memory Programming Mode	
	Addition of 28.5 Processing Time for Each Command When Dedicated Flash Memory Programmer Is in Use (Reference Value)	
	Modification of Remark in 28.6 Self-Programming	
	Addition of Note 4 in 28.8.3 Procedure for accessing data flash memory	
	Addition of PG-FP6 and deletion of FL-PR5, and addition of E2, E2 Lite, and E20	**CHAPTER 29 ON-CHIP DEBUGGING**
	Modification of Table 31-5. Operation List (14/17)	**CHAPTER 31 INSTRUCTION SET**
	Modification of 32.3.1 Pin characteristics, (T_A = –40 to +85°C, 1.6 V ≤ V_{DD} ≤ 5.5 V, V_{SS} = 0 V)	**CHAPTER 32 ELECTRICAL SPECIFICATIONS (T_A = –40 to +85°C)**
	Modification of 32.6.1 A/D converter characteristics (T_A = –40 to +85°C, 1.6 V ≤ AV_{REFP} ≤ V_{DD} ≤ 5.5 V, V_{SS} = 0 V, Reference voltage (+) = AV_{REFP}, Reference voltage (–) = AV_{REFM} = 0 V)	
	Modification of 32.11 Timing Specifications for Switching Flash Memory Programming Modes	
	Deletion of G: INDUSTRIAL APPLICATIONS from the title of CHAPTER 33	**CHAPTER 33 ELECTRICAL SPECIFICATIONS (T_A = –40 to +105°C)**
	33. 5. 2 Serial Interface IICA (T_A = –40 to +105°C, 2.4 V ≤ V_{DD} ≤ 5.5 V, V_{SS} = 0 V): Deletion of Note 3 in the table	
	Modification of 33.6.1 A/D converter characteristics (T_A = –40 to +105°C, 2.4 V ≤ AV_{REFP} ≤ V_{DD} ≤ 5.5 V, V_{SS} = 0 V, Reference voltage (+) = AV_{REFP}, Reference voltage (–) = AV_{REFM} = 0 V)	
	Modification of 33.11 Timing Specifications for Switching Flash Memory Programming Modes	

(3/14)

Edition	Description	Chapter
Rev.2.10	Modification of features of 16-bit timer and 16-bit timer KB20 (IH) in 1.1 Features	**CHAPTER 1 OUTLINE**
	Addition of product name (RL78/L13) and description (Top View) in 1.3.1 64-pin products	
	Addition of product name (RL78/L13) and description (Top View) in 1.3.2 80-pin products	
	Modification of functional overview of main system clock in 1.6 Outline of Functions	
	Modification of pin type of P40, P60, and P61, and modification of I/O column of P137 in 2.1.1 64-pin products	**CHAPTER 2 PIN FUNCTIONS**
	Modification of pin type of P40, P60, and P61 in 2.1.2 80-pin products	
	Modification of Figure 2-4. Pin Block Diagram for Pin Type 4-3-3	
	Addition of Figure 2-5. Pin Block Diagram for Pin Type 7-1-3	
	Addition of caution in Figure 2-9 Pin Block Diagram for Pin Type 7-5-10	
	Addition of caution in Figure 2-11 Pin Block Diagram for Pin Type 7-6-4	
	Addition of caution in Figure 2-14 Pin Block Diagram for Pin Type 8-5-4	
	Addition of cautions 1 and 2 in Figure 2-15 Pin Block Diagram for Pin Type 8-5-10	
	Addition of cautions 1 and 2 in Figure 2-16 Pin Block Diagram for Pin Type 8-6-4	
	Addition of Figure 2-17 Pin Block Diagram for Pin Type 12-1-3	
	Modification of vector table addresses in Table 3-3 Vector Table (1/2)	**CHAPTER 3 CPU ARCHITECTURE**
	Modification of vector table addresses in Table 3-3 Vector Table (2/2)	
	Modification of addresses (00000H and 00001H) in (1) Program counter (PC) of 3.2.1 Control registers	
	Modification of description in (8) TKBO00 = 0/TKBO01-0, 1, 2 = 0 (setting when 16-bit timer KB20 is not used) of 4.5.2 Register settings for alternate function whose output function is not used	**CHAPTER 4 PORT FUNCTIONS**
	Modification of description in <2> High-speed on-chip oscillator of 5.1 Functions of Clock Generator	**CHAPTER 5 CLOCK GENERATOR**
	Modification of caution in Figure 5-4 Format of Clock Operation Status Control Register (CSC)	
	Modification of remark 1 in Figure 5-11 Format of High-Speed On-Chip Oscillator Trimming Register (HIOTRM)	
	Modification of description in 5.4.4 Low-speed on-chip oscillator	
	Modification of note in (6) and (8) of Table 5-3 CPU Clock Transition and SFR Setting Examples (3/5)	
	Modification of description in Table 5-4 Changing CPU Clock (1/2)	
	Modification of description in 5.6.7 Conditions before stopping clock oscillation	
	Modification of description in 5.7 Resonator and Oscillator Constants	
	Modification of formula in (1) of 6.8.1 Operation as interval timer/square wave output	**CHAPTER 6 TIMER ARRAY UNIT**
	Modification of description in Figure 6-58 Operation Procedure When Input Signal High-/Low-Level Width Measurement Function Is Used	
	Modification of caution in 6.9.1 Operation as one-shot pulse output function	

(4/14)

Edition	Description	Chapter
Rev.2.10	Modification of description and table, and addition of caution 2	**CHAPTER 7 16-BIT TIMER KB20**
	Modification of caution 3 in 7.3.16 16-bit timer KB2 counter restart select register (ELSELRn)	
	Modification of description in 7.3.24 Registers controlling port functions of 16-bit timer KB2 output pins	
	Modification of description in 7.5.4 PWM output function for IH control	
	Modification of description in Figure 12-27 Setting up Test Mode	**CHAPTER 12 A/D CONVERTER**
	Modification of description in Figure 12-31 Flowchart for Setting up SNOOZE Mode	
	Modification of note 2 in 14.2.2 Lower 8/9 bits of the serial data register mn (SDRmn)	**CHAPTER 14 SERIAL ARRAY UNIT**
	Modification of caution 4 in Figure 14-9 Format of Serial Data Register mn (SDRmn)	
	Modification of pin name in Figure 14-18 Examples of Reverse Transmit Data	
	Modification of Figure 14-71 Timing Chart of SNOOZE Mode Operation (once startup) (Type 1: DAPmn = 0, CKPmn = 0)	
	Modification of Figure 14-72 Flowchart of SNOOZE Mode Operation (Once Startup)	
	Modification of Figure 14-73. Timing Chart of SNOOZE Mode Operation (continuous startup) (Type 1: DAPmn = 0, CKPmn = 0)	
	Modification of Figure 14-74 Flowchart of SNOOZE Mode Operation (Continuous Startup)	
	Modification of description and addition of caution 5 in 14.6.3 SNOOZE mode function	
	Modification of Figure 14-90 Timing Chart of SNOOZE Mode Operation (EOCm1 = 0, SSECm = 0/1)	
	Modification of Figure 14-91 Timing Chart of SNOOZE Mode Operation (EOCm1 = 1, SSECm = 0)	
	Modification of Figure 14-92 Flowchart of SNOOZE Mode Operation (EOCm1 = 0, SSECm = 0/1 or EOCm1 = 1, SSECm = 0)	
	Modification of Figure 14-93 Timing Chart of SNOOZE Mode Operation (EOCm1 = 1, SSECm = 1)	
	Modification of Figure 14-94 Flowchart of SNOOZE Mode Operation (EOCm1 = 1, SSECm = 1)	
	Modification of Figure 14-101 Flowchart for LIN Reception	
	Modification of description in 15.3.6 IICA low-level width setting register n (IICWLn)	**CHAPTER 15 SERIAL INTERFACE IICA**
	Modification of formula in 15.5.14 Communication reservation	
	Modification of notes and remark in Figure 15-27 Communication Reservation Protocol	
	Addition of description in Figure 15-29 Master Operation in Multi-Master System (1/3)	
	Modification of note and addition of description in Figure 15-29 Master Operation in Multi-Master System (2/3)	
	Addition of description in Figure 15-30 Slave Operation Flowchart (1)	
	Modification of vector table addresses in Tables 19-1 to 19 - 3 Interrupt Source List	**CHAPTER 19 INTERRUPT FUNCTIONS**
	Modification of addresses	**CHAPTER 22 RESET FUNCTION**
	Modification of address (00000H, 00001H) in Table 22-2 State of Hardware After Receiving a Reset Signal	
	Addition of description in Figure 22-6 Example of Procedure for Checking Reset Source	

(5/14)

Edition	Description	Chapter
Rev.2.10	Modification of notes 3 and 4 in Figure 23-2 Timing of Generation of Internal Reset Signal by Power-on-reset Circuit and Voltage Detector (1/3)	**CHAPTER 23 POWER-ON-RESET CIRCUIT**
	Modification of note 3 in Figure 23-2 Timing of Generation of Internal Reset Signal by Power-on-reset Circuit and Voltage Detector (2/3)	
	Modification of description in 24.1 Functions of Voltage Detector	**CHAPTER 24 VOLTAGE DETECTOR**
	Modification of description in (3) 000C2H/010C2H of 27.1 Functions of Option Bytes	**CHAPTER 27 OPTION BYTE**
	Modification of Table 28-1 Wiring Between RL78 Microcontroller and Dedicated Flash Memory Programmer	**CHAPTER 28 FLASH MEMORY**
	Addition of FLMD1 in Figure 28-2 Communication with Dedicated Flash Memory Programmer	
	Modification of signal name in Table 28-2 Pin Connection	
	Modification of description and addition of note in Table 29-1 On-chip Debug Security ID	**CHAPTER 29 ON-CHIP DEBUG FUNCTION**
	Modification of description in Absolute Maximum Ratings (3/3)	**CHAPTER 32 ELECTRICAL SPECIFICATIONS (T_A = -40 to + 85°C)**
	Modification of description in 32.3.1 Pin characteristics	
	Modification of remark 3 in 32.5.1 (4) During communication at same potential (simplified I^2C mode)	
	Modification of the title and note, and addition of caution in 32.8 RAM Data Retention Characteristics	
	Addition of Remark	**CHAPTER 33 ELECTRICAL SPECIFICATIONS (G: INDUSTRIAL APPLICATIONS T_A = -40 to + 105°C)**
	Modification of description in Absolute Maximum Ratings (T_A = 25 °C) (3/3)	
	Modification of description in 33.3.1 Pin characteristics	
	Modification of remark 3 in 33.5.1 (4) During communication at same potential (simplified I^2C mode)	
	Modification of the title and note, and addition of caution in 33.8 RAM Data Retention Characteristics	
Rev.2.00	Deletion of overscore over SCK∗∗ and ACK	Throughout
	Change of f_{EXT} to f_{EXS}, high accuracy RTC to RTC2, and high accuracy real-time clock to real-time clock 2	
	Modification of **1.1 Features**	**CHAPTER 1 OUTLINE**
	Modification of **1.2 List of Part Numbers**	
	Modification of **1.3.1 64-pin products**	
	Modification of **1.3.2 80-pin products**	
	Modification of **1.4 Pin Identification**	
	Modification of **1.5.1 64-pin products**	
	Modification of **1.5.2 80-pin products**	
	Modification of **1.6 Outline of Functions**	
	Modification of **2.1.1 64-pin products**	**CHAPTER 2 PIN FUNCTIONS**
	Modification of **2.1.2 80-pin products**	
	Modification of **2.2.1 With functions for each product**	
	Modification of **2.2.2 Description of Functions**	
	Modification of **2.3 Connection of Unused Pins**	
	Addition of **2.4 Block Diagrams of Pins**	

(6/14)

Edition	Description	Chapter
Rev.2.00	Modification of **Note** and **Caution** in **Figure 3-1. Memory Map (R5F10WLA, R5F10WMA)**, **Figure 3-2. Memory Map (R5F10WLC, R5F10WMC)**, **Figure 3-3. Memory Map (R5F10WLD, R5F10WMD)**, **Figure 3-4. Memory Map (R5F10WLE, R5F10WME)**, **Figure 3-5. Memory Map (R5F10WLF, R5F10WMF)**, and **Figure 3-6. Memory Map (R5F10WLG, R5F10WMG)**	**CHAPTER 3 CPU ARCHITECTURE**
	Modification of **Table 3-3. Vector Table (2/2)**	
	Modification of **3.1.3 Internal data memory space**	
	Modification of **3.1.6 Data memory addressing**	
	Modification of **3.2.1 (3) Stack pointer (SP)**	
	Modification of **3.2.2 General-purpose registers**	
	Modification of **3.2.3 ES and CS registers**	
	Modification of **3.2.4 Special function registers (SFRs)**	
	Modification of **Table 3-5. SFR List (2/5)** and **(3/5)**	
	Modification of **3.2.5 Extended special function registers (2nd SFRs: 2nd Special Function Registers)**	
	Modification of **Table 3-6. Extended SFR (2nd SFR) List (2/9)**	
	Modification of **Figure 3-15. Outline of Relative Addressing**	
	Modification of **Figure 3-16. Example of CALL !!addr20/BR !!addr20**	
	Modification of **Figure 3-17. Example of CALL !addr16/BR !addr16**	
	Modification of **Figure 3-19. Outline of Register Direct Addressing**	
	Modification of **Figure 3-20. Outline of Implied Addressing**	
	Modification of **Figure 3-21. Outline of Register Addressing**	
	Modification of **3.4.3 Direct addressing**	
	Modification of **Figure 3-24. Outline of Short Direct Addressing**	
	Modification of **3.4.5 SFR addressing**	
	Modification of **Figure 3-26. Example of [DE], [HL]**	
	Modification of **Figure 3-27. Example of ES:[DE], ES:[HL]**	
	Modification of **3.4.7 Based addressing**	
	Modification of **Figure 3-35. Example of [HL+B], [HL+C]**	
	Modification of **Figure 3-36. Example of ES:[HL+B], ES:[HL+C]**	
	Modification of **3.4.9 Stack addressing**	
	Modification of **Table 4-1 Port Configuration**	**CHAPTER 4 PORT FUNCTIONS**
	Modification of **4.2.1 Port 0**	
	Modification of **4.2.2 Port 1**	
	Modification of **4.2.3 Port 2**	
	Modification of **4.2.4 Port 3**	
	Modification of **4.2.5 Port 4**	
	Modification of **4.2.6 Port 5**	
	Modification of **4.2.7 Port 6**	
	Modification of **4.2.8 Port 7**	
	Modification of **4.2.9 Port 12**	
	Modification of **4.2.10 Port 13**	
	Modification of **4.3 Registers Controlling Port Function**	

(7/14)

Edition	Description	Chapter
Rev.2.00	Modification of **4.4.4 Handling different potential (1.8 V, 2.5 V, 3 V) by using I/O buffers**	**CHAPTER 4 PORT FUNCTIONS**
	Modification of **4.5 Register Settings When Using Alternate Function**	
	Modification of **5.1 (1) Main system clock**	**CHAPTER 5 CLOCK GENERATOR**
	Modification of **5.1 (2) Subsystem clock**	
	Modification of **Table 5-1. Configuration of Clock Generator**	
	Modification of **Figure 5-1. Block Diagram of Clock Generator**	
	Modification of **5.3 Registers Controlling Clock Generator**	
	Modification of **5.4 System Clock Oscillator**	
	Modification of **5.5 Clock Generator Operation**	
	Modification of **5.6 Controlling Clock**	
	Addition of **5.7 Resonator and Oscillator Constants**	
	Modification of **CHAPTER 6 TIMER ARRAY UNIT**	**CHAPTER 6 TIMER ARRAY UNIT**
	Modification of **6.1 Functions of Timer Array Unit**	
	Modification of **6.2 Configuration of Timer Array Unit**	
	Modification of **6.3 Registers Controlling Timer Array Unit**	
	Modification of **6.5 Operation of Counter**	
	Modification of **6.6 Channel Output (TOmn pin) Control**	
	Addition of **6.7 Timer Input (TImn) Control**	
	Modification of **6.8 Independent Channel Operation Function of Timer Array Unit**	
	Modification of **6.9 Simultaneous Channel Operation Function of Timer Array Unit**	
	Modification of **7.3 Registers Controlling 16-bit Timer KB20**	**CHAPTER 7 16-BIT TIMER KB20**
	Modification of **7.4 Operation of 16-bit Timer KB20**	
	Modification of **7.5 Option Functions of 16-bit Timer KB20**	
	Modification of **7.9 Cautions When Using 16-bit Timer KB20**	
	Modification of **8.1 Functions of Real-time Clock 2**	**CHAPTER 8 REAL-TIME CLOCK 2**
	Modification of **8.2 Configuration of Real-time Clock 2**	
	Modification of **8.3 Registers Controlling Real-time Clock 2**	
	Modification of **8.4 Real-time Clock 2 Operation**	
	Modification of **9.2 Configuration of 12-bit Interval Timer**	**CHAPTER 9 12-BIT INTERVAL TIMER**
	Modification of **9.3 Registers Controlling 12-bit Interval Timer**	
	Modification of **9.4 12-bit Interval Timer Operation**	
	Modification of **10.1 Functions of Clock Output/Buzzer Output Controller**	**CHAPTER 10 CLOCK OUTPUT/BUZZER OUTPUT CONTROLLER**
	Modification of **10.2 Configuration of Clock Output/Buzzer Output Controller**	
	Modification of **10.3 Registers Controlling Clock Output/Buzzer Output Controller**	
	Modification of **10.4 Operations of Clock Output/Buzzer Output Controller**	
	Modification of **10.5 Cautions of Clock Output/Buzzer Output Controller**	
	Modification of **11.1 Functions of Watchdog Timer**	**CHAPTER 11 WATCHDOG TIMER**
	Modification of **11.2 Configuration of Watchdog Timer**	
	Modification of **11.4 Operation of Watchdog Timer**	

(8/14)

Edition	Description	Chapter
Rev.2.00	Modification of **12.1 Function of A/D Converter**	**CHAPTER 12 A/D CONVERTER**
	Modification of **12.2 Configuration of A/D Converter**	
	Modification of **12.3 Registers Used in A/D Converter**	
	Modification of **12.4 A/D Converter Conversion Operations**	
	Modification of **12.6 A/D Converter Operation Modes**	
	Modification of **12.7 A/D Converter Setup Flowchart**	
	Modification of **12.8 SNOOZE Mode Function**	
	Modification of **12.9 How to Read A/D Converter Characteristics Table**	
	Modification of **12.10 Cautions for A/D Converter**	
	Addition of **13.1 Functions of Comparator**	**CHAPTER 13 COMPARATOR**
	Addition of **13.2 Configuration of Comparator**	
	Modification of **13.3 Registers Controlling Comparator**	
	Modification of **13.4 Operation**	
	Modification of **14.1 Functions of Serial Array Unit**	**CHAPTER 14 SERIAL ARRAY UNIT**
	Modification of **14.2 Configuration of Serial Array Unit**	
	Modification of **14.3 Registers Controlling Serial Array Unit**	
	Modification of **14.5 Operation of 3-Wire Serial I/O (CSI00, CSI10) Communication**	
	Modification of **14.6 Operation of UART (UART0 to UART3) Communication**	
	Modification of **14.7 LIN Communication Operation**	
	Modification of **14.8 Operation of Simplified I^2C (IIC00, IIC10) Communication**	
	Modification of **15.1 Functions of Serial Interface IICA**	**CHAPTER 15 SERIAL INTERFACE IICA**
	Modification of **15.3 Registers Controlling Serial Interface IICA**	
	Modification of **15.5 I^2C Bus Definitions and Control Methods**	
	Modification of **Table 16-1. Number of LCD Display Function Pins of Each Product**	**CHAPTER 16 LCD CONTROLLER/DRIVER**
	Modification of **16.1 Functions of LCD Controller/Driver**	
	Modification of **16.2 Configuration of LCD Controller/Driver**	
	Modification of **16.3 Registers Controlling LCD Controller/Driver**	
	Modification of **16.5 Selection of LCD Display Register**	
	Modification of **16.6 Setting the LCD Controller/Driver**	
	Modification of **16.7 Operation Stop Procedure**	
	Modification of **16.8 Supplying LCD Drive Voltages V_{L1}, V_{L2}, V_{L3}, and V_{L4}**	
	Modification of **16.10 Display Modes**	
	Modification of **16.2 Configuration of LCD Controller/Driver**	
	Modification of **16.3 Registers Controlling LCD Controller/Driver**	
	Modification of **16.5 Selection of LCD Display Register**	
	Modification of **16.6 Setting the LCD Controller/Driver**	
	Modification of **16.7 Operation Stop Procedure**	
	Modification of **16.8 Supplying LCD Drive Voltages V_{L1}, V_{L2}, V_{L3}, and V_{L4}**	
	Modification of **16.10 Display Modes**	
	Modification of **17.2 Configuration of Multiplier and Divider/Multiply-Accumulator**	**CHAPTER 17 MULTIPLIER AND DIVIDER/MULTIPLY-ACCUMULATOR**
	Modification of **17.3 Register Controlling Multiplier and Divider/Multiply-Accumulator**	
	Modification of **17.4 Operations of Multiplier and Divider/Multiply-Accumulator**	

(9/14)

Edition	Description	Chapter
Rev.2.00	Modification of **18.1 Functions of DMA Controller**	**CHAPTER 18 DMA CONTROLLER**
	Modification of **18.5 Example of Setting of DMA Controller**	
	Modification of **19.2 Interrupt Sources and Configuration**	**CHAPTER 19 INTERRUPT FUNCTIONS**
	Modification of **19.3 Registers Controlling Interrupt Functions**	
	Modification of **19.4 Interrupt Servicing Operations**	
	Modification of **20.1 Functions of Key Interrupt**	**CHAPTER 20 KEY INTERRUPT FUNCTION**
	Modification of **20.3 Register Controlling Key Interrupt**	
	Modification of **21.2 Registers Controlling Standby Function**	**CHAPTER 21 STANDBY FUNCTION**
	Modification of **21.3 Standby Function Operation**	
	Modification of **CHAPTER 22 RESET FUNCTION**	**CHAPTER 22 RESET FUNCTION**
	Modification of **22.1 Timing of Reset Operation**	
	Modification of **22.2 States of Operation During Reset Periods**	
	Modification of **22.3 Register for Confirming Reset Source**	
	Modification of **23.1 Functions of Power-on-reset Circuit**	**CHAPTER 23 POWER-ON-RESET CIRCUIT**
	Modification of **23.3 Operation of Power-on-reset Circuit**	
	Modification of **24.1 Functions of Voltage Detector**	**CHAPTER 24 VOLTAGE DETECTOR**
	Modification of **24.2 Configuration of Voltage Detector**	
	Modification of **24.3 Registers Controlling Voltage Detector**	
	Modification of **24.4 Operation of Voltage Detector**	
	Modification of **24.5 Cautions for Voltage Detector**	
	Modification of **25.1 Overview of Safety Functions**	**CHAPTER 25 SAFETY FUNCTIONS**
	Modification of **25.2 Registers Used by Safety Functions**	
	Modification of **25.3 Operation of Safety Functions**	
	Modification of **27.1 Functions of Option Bytes**	**CHAPTER 27 OPTION BYTE**
	Modification of **27.2 Format of User Option Byte**	
	Modification of **CHAPTER 28 FLASH MEMORY**	**CHAPTER 28 FLASH MEMORY**
	Modification of **28.1 Serial Programming Using Flash Memory Programmer**	
	Modification of **28.2 Serial Programming Using External Device (that Incorporates UART)**	
	Modification of **28.3 Connection of Pins on Board**	
	Modification of **28.4 Serial Programming Method**	
	Modification of **28.5 Self-Programming**	
	Modification of **28.6 Security Settings**	
	Modification of **28.7 Data Flash**	
	Modification of **29.1 Connecting E1 On-chip Debugging Emulator**	**CHAPTER 29 ON-CHIP DEBUG FUNCTION**
	Modification of **31.1 Conventions Used in Operation List**	**CHAPTER 31 INSTRUCTION SET**
	Modification of **31.2 Operation List**	

(10/14)

Edition	Description	Chapter
Rev.2.00	Modification of **CHAPTER 32 ELECTRICAL SPECIFICATIONS (T_A = –40 to +85°C)**	**CHAPTER 32 ELECTRICAL SPECIFICATIONS (T_A = –40 to +85°C)**
	Modification of **32.1 Absolute Maximum Ratings**	
	Modification of **32.2 Oscillator Characteristics**	
	Modification of **32.3 DC Characteristics**	
	Modification of **32.4 AC Characteristics**	
	Modification of **32.5 Peripheral Functions Characteristics**	
	Modification of **32.6 Analog Characteristics**	
	Modification of **32.7 LCD Characteristics**	
	Modification of **32.8 Data Memory STOP Mode Low Supply Voltage Data Retention Characteristics**	
	Modification of **32.9 Flash Memory Programming Characteristics**	
	Modification of **32.10 Dedicated Flash Memory Programmer Communication (UART)**	
	Modification of **32.11 Timing Specifications for Switching Flash Memory Programming Modes**	
	Modification of **CHAPTER 33 ELECTRICAL SPECIFICATIONS (T_A = –40 to +105°C)**	**CHAPTER 33 ELECTRICAL SPECIFICATIONS (T_A = –40 to +105°C)**
	Modification of **33.1 Absolute Maximum Ratings**	
	Modification of **33.2 Oscillator Characteristics**	
	Modification of **33.3 DC Characteristics**	
	Modification of **33.4 AC Characteristics**	
	Modification of **33.5 Peripheral Functions Characteristics**	
	Modification of **33.6 Analog Characteristics**	
	Modification of **33.7 LCD Characteristics**	
	Modification of **33.8 Data Memory STOP Mode Low Supply Voltage Data Retention Characteristics**	
	Modification of **33.9 Flash Memory Programming Characteristics**	
	Modification of **33.10 Dedicated Flash Memory Programmer Communication (UART)**	
	Modification of **33.11 Timing Specifications for Switching Flash Memory Programming Modes**	
	Modification of **34.1 64-pin Products**	**CHAPTER 34 PACKAGE DRAWINGS**
	Modification of **34.2 80-pin Products**	
Rev.1.00	Modification of segment signal output and operating ambient temperature in **1.1 Features**	**CHAPTER 1 OUTLINE**
	Modification of **1.2 Ordering Information**	
	Modification of **Figure 1-1. Part Number, Memory Size, and Package of RL78/L13**	
	Modification of segment signal output, power-on-reset circuit, and operating ambient temperature in **1.6 Outline of Functions**	
	Modification of segment signal output pins in **2.2.1 With functions for each product**	**CHAPTER 2 PIN FUNCTIONS**
	Modification of segment signal output pins in **2.2.2 Description of Functions**	
	Modification of P45/IVREF0 in **Table 2-2. Connection of Unused Pins (80-pin products)**	
	Modification of **3.1.2 Mirror area**	**CHAPTER 3 CPU ARCHITECTURE**
	Modification of **Figure 3-19. Configuration of ES and CS Registers**	
	Modification of **Table 3-6. Extended SFR (2nd SFR) List (8/10)**	

(11/14)

Edition	Description	Chapter
Rev.1.00	Modification of **note** in **4.2.1 Port 0, 4.2.2 Port 1, 4.2.4 Port 3, 4.2.5 Port 4, 4.2.6 Port 5, 4.2.8 Port 7, and 4.2.10 Port 13**	**CHAPTER 4 PORT FUNCTIONS**
	Modification of P45 in **Table 4-8. Settings of Registers When Using Port 4**	
	Modification of **Figure 4-19. Block Diagram of P45**	
	Modification of **4.3 (9) LCD port function registers 0 to 6 (PFSEG0 to PFSEG6)**	
	Modification of **Figure 4-43. Format of LCD port function registers 0 to 6 (PFSEG0 to PFSEG6) (80-pin products)**	
	Modification of P45 in **Table 4-16. Settings of Port Related Register When Using Alternate Function (4/7)**	
	Addition of **4.5.3 P45 (port that serves as an analog input pin (IVREF0))**	
	Modification of **Table 4-24. Handling of Unused Alternate Functions**	
	Modification of **Figure 5-1. Block Diagram of Clock Generator**	**CHAPTER 5 CLOCK GENERATOR**
	Modification of **note** in **Figure 5-8. Format of Peripheral Enable Register 1 (PER1)**	
	Modification of **5.3 (8) High-speed on-chip oscillator frequency select register (HOCODIV)**	
	Modification of **cautions 1** to **3** in **Figure 5-10. Format of High-speed On-chip Oscillator Frequency Select Register (HOCODIV)**	
	Modification of **Figure 5-14. Clock Generator Operation When Power Supply Voltage Is Turned On**	
	Modification of [Option byte setting] in **5.6.1 Example of setting high-speed on-chip oscillator**	
	Modification of **Figure 5-15. CPU Clock Status Transition**	
	Modification of **Table 5-3. CPU Clock Transition and SFR Setting Examples (2/5)** and **(3/5)**	
	Modification of **Figure 6-1. Entire Configuration of Timer Array Unit**	**CHAPTER 6 TIMER ARRAY UNIT**
	Modification of **Figure 6-2. Internal Block Diagram of Channels 0, 2, 4, 6 of Timer Array Unit** to **Figure 6-6. Internal Block Diagram of Channels 7 of Timer Array Unit**	
	Modification of **6.2 (2) Timer data register mn (TDRmn)**	
	Addition of **caution 1** to **Figure 6-23. Format of Input Switch Control Register (ISC)**	
	Modification of **Figure 7-1. Block Diagram of 16-bit Timer KB20**	**CHAPTER 7 16-BIT TIMER KB20**
	Modification of **notes 2** and **3** in **Figure 7-4. Format of Timer Clock Select Register (TKBPSCS0)**	
	Modification of **Figure 7-5. Format of 16-bit Timer KB2 Operation Control Register 00 (TKBCTL00)**	
	Modification of **Figure 7-8. Format of 16-bit Timer KB2 Output Control Register 01 (TKBIOC01)**	
	Modification of **Figure 7-9. Format of 16-bit Timer KB2 Flag Register 0 (TKBFLG0)**	
	Modification of **Figure 7-11. Format of 16-bit Timer KB2 Flag Clear Trigger Register 0 (TKBCLR0)**	
	Modification of **Figure 7-21. Format of Forced Output Stop Function Control Register 0 (TKBPACTL00)**	
	Modification of **Figure 7-22. Format of Forced Output Stop Function Control Register 1 (TKBPACTL01)**	

(12/14)

Edition	Description	Chapter
Rev.1.00	Modification of **Figure 7-23. Format of Forced Output Stop Function Control Register 2 (TKBPACTL02)**	**CHAPTER 7 16-BIT TIMER KB20**
	Modification of **Figure 7-42. Timing Sample for Standalone Mode (Period Controlled by TKBCR00) (When default value of output is low level (TKBTOD0p = 0) and active level is high level (TKBTOL0p = 0))**	
	Modification of **Figure 7-44. Batch Overwrite Function: Figure of Timing of Buffer Updating during Counting Operation**	
	Modification of **Figure 7-46. Batch Overwrite Function: Figure of Standalone Operation during Period Controlled by External Trigger Input and Timing of Buffer Updating during Counting Operation (TKBTSE0 bit set to 1)**	
	Modification of **Figure 7-47. Batch Overwrite Function: Figure of Standalone Operation during Period Controlled by External Trigger Input and Timing of Buffer Updating during Counting Operation (TKBTSE0 bit cleared to 0)**	
	Modification of **Figure 7-51. Figure of Timing of Interleave PFC Mode (Operation for Status No. 5: INT0 Input Detected (for the first time))**	
	Modification of table in **7.5 Option Functions of 16-bit Timer KB20**	
	Modification of **Figure 7-59. Figure of Waveform at Dithering Operation** and **Figure 7-61. Figure of Waveform at Dithering Operation (When TKBCR03 = TKBCR00 + 1)**	
	Modification of **7.5.4 PWM Output Function for IH Control**	
	Modification of **7.6.1 Forced Output Stop Function 1 and 2**	
	Modification of **7.7.1 I/O Setting for Forced Output Stop Function 1**	
	Modification of **7.7.2 (1) TKBPAHCM0n1, TKBPAHCM0n0 Bits = 00** to **(4) TKBPAHCM0n1, TKBPAHCM0n0 bits = 11**	
	Modification of **7.7.3 (1) Setting TKBPAHCM0n = 10** and **(2) Setting TKBPAHCM0n = 11**	
	Modification of **7.8.1 I/O Setting for Forced Output Stop Function 2**	
	Modification of **7.9 Cautions When Using 16-Bit Timer KB20**	
	Modification of **Figure 8-1. High Accuracy Real-time Clock Diagram**	**CHAPTER 8 HIGH ACCURACY REAL-TIME CLOCK**
	Modification of **note 1** in **8.3 Registers Controlling High Accuracy Real-time Clock**	
	Modification of [Calculating the target correction value] in **8.4.8 Example of watch error correction of high accuracy real-time clock**	
	Modification of **12.2 (9) AV_{REFP} pin**	**CHAPTER 12 A/D CONVERTER**
	Modification of **cautions 1** and **3** in **Figure 12-3. Format of A/D Converter Mode Register 0 (ADM0)**	
	Modification of **caution 1** in **Table 12-3. A/D Conversion Time Selection**	
	Modification of **Figure 12-5. A/D Converter Sampling and A/D Conversion Timing (Example for Software Trigger Mode)**	
	Modification of **Figure 12-18. Conversion Operation of A/D Converter (Software Trigger Mode)**	
	Modification of **Figure 12-20. Example of Software Trigger Mode (Sequential Conversion Mode) Operation Timing** to **Figure 12-25. Example of Hardware Trigger Wait Mode (One-Shot Conversion Mode) Operation Timing**	
	Modification of **Table 13-1. Comparator Specifications**	**CHAPTER 13 COMPARATOR**
	Modification of **Figure 13-1. Comparator Block Diagram**	

(13/14)

Edition	Description	Chapter
Rev.1.00	Modification of **note 4** and addition of **notes 5** to **7** in **Figure 13-3. Format of Comparator Mode Setting Register (COMPMDR)**	**CHAPTER 13 COMPARATOR**
	Addition of **13.3 (6) LCD Port Function Register 3 (PFSEG3)**	
	Modification of **Table 13-4. Procedure for Setting Comparator Associated Registers**	
	Modification of **Figure 13-12 Comparator i (i = 0 or 1) Digital Filter and Edge Detection Configuration**	
	Addition of <1> to **13.4.3 Comparator i Output (i = 0 or 1)**	
	Addition of **caution** to **13.4.4 Stopping or Supplying Comparator Clock**	
	Modification of Maximum transfer rate to **14.1.1 3-wire serial I/O (CSI00, CSI10)** and **14.5 Operation of 3-Wire Serial I/O (CSI00, CSI10) Communication**	**CHAPTER 14 SERIAL ARRAY UNIT**
	Modification of **Figure 14-1. Block Diagram of Serial Array Unit 0** and **Figure 14-2. Block Diagram of Serial Array Unit 1 (80-pin products)**	
	Modification of **caution 2** to **Figure 14-19. Format of Input Switch Control Register (ISC)**	
	Modification of transfer rate to **14.5.1 Master transmission**, **14.5.2 Master reception** and **14.5.3 Master transmission/reception**	
	Addition of **caution 3** to **14.6.3 SNOOZE mode function**	
	Addition of **caution 3** to **14.7.2 LIN reception**	
	Modification of **Figure 15-1. Block Diagram of Serial Interface IICA0**	**CHAPTER 15 SERIAL INTERFACE IICA**
	Modification of **Table 16-1. Number of LCD Display Function Pins of Each Product**	**CHAPTER 16 LCD CONTROLLER/DRIVER**
	Modification of (4) in **16.1 Functions of LCD Controller/Driver**	
	Modification of **Table 16-2. Maximum Number of Pixels**	
	Modification of **Table 16-4. Combinations of Display Waveform, Time Slices, and Bias Method**	
	Addition of **remark** to **Figure 16-5. Format of LCD Clock Control Register 0 (LCDC0) (1/2)**	
	Modification of **caution 2** and addition of **caution 3** in **Figure 16-5. Format of LCD Clock Control Register 0 (LCDC0) (2/2)**	
	Modification of **Figure 16-7. Format of LCD Boost Level Control Register (VLCD)**	
	Modification of 1**6.3 (8) LCD port function registers 0 to 6 (PFSEG0 to PFSEG6)**	
	Modification of **Figure 16-11. Format of LCD Port Function Registers 0 to 6 (80-pin Products)**	
	Modification of **Table 16-11. Relationship Between LCD Display Data Register Contents and Segment/Common Outputs**	
	Modification of **caution** in **Figure 16-23. Examples of LCD Drive Power Connections (External Resistance Division Method)**	
	Modification of <example of calculation of LCD frame frequency> in **Figure 16-26. Common Signal Waveforms**	
	Modification of **Figure 16-27. Voltages and Phases of Common and Segment Signals (3/3)**	
	Modification of **Figure 16-40. Four-Time-Slice LCD Drive Waveform Examples Between SEG12 and Each Common Signals (1/3 Bias Method) (2/2)**	
	Modification of **Figure 16-43. Eight-Time-Slice LCD Drive Waveform Examples Between SEG4 and Each Common Signals (1/4 Bias Method)**	

(14/14)

Edition	Description	Chapter
Rev.1.00	Modification of **Figure 17-9. Timing Diagram of Multiply-Accumulation (signed) Operation (2 × 3 + (–4) = 2 → 32767 × (–1) + (–2147483647) = –2147516414 (overflow occurs.))**	**CHAPTER 17 MULTIPLIER AND DIVIDER/MULTIPLY-ACCUMULATOR**
	Modification of **18.6 (6) Operation if instructions for accessing the data flash area**	**CHAPTER 18 DMA CONTROLLER**
	Modification of **caution 1** in **Figure 20-3. Format of Key Return Control Register (KRM0)**	**CHAPTER 20 KEY INTERRUPT FUNCTION**
	Modification of **20.3 (3) Key return flag register (KRF)**	
	Modification of **caution 1** in **Figure 20-4. Format of Key Return Flag Register (KRF)**	
	Modification of **Table 21-1. Operating Statuses in HALT Mode (2/2)**	**CHAPTER 21 STANDBY FUNCTION**
	Modification of description and addition of **caution 1** in this page	**CHAPTER 22 RESET FUNCTION**
	Modification of **23.1 Functions of Power-on-reset Circuit**	**CHAPTER 23 POWER-ON-RESET CIRCUIT**
	Modification of **23.3 Operation of Power-on-reset Circuit**	
	Modification of **Figure 23-2. Timing of Generation of Internal Reset Signal by Power-on-reset Circuit and Voltage Detector**	
	Addition of **caution** to **Table 24-1. LVD Operation Mode and Detection Voltage Settings for User Option Byte (000C1H) (1/2)**	**CHAPTER 24 VOLTAGE DETECTOR**
	Addition of **cautions 1** and **2** to **Table 24-1. LVD Operation Mode and Detection Voltage Settings for User Option Byte (000C1H) (1/2)**	
	Modification of **Figure 24-5. Timing of Voltage Detector Internal Interrupt Signal Generation (Option Byte LVIMDS1, LVIMDS0 = 0, 1)**	
	Modification of **Figure 24-6. Timing of Voltage Detector Reset Signal and Interrupt Signal Generation (Option Byte LVIMDS1, LVIMDS0 = 1, 0)**	
	Addition of **(3)** and **(4)** to **24.5 Cautions for Voltage Detector**	
	Modification of **Figure 25-1. Format of Flash Memory CRC Control Register (CRC0CTL)**	**CHAPTER 25 SAFETY FUNCTIONS**
	Modification of **Figure 25-10. Invalid access detection area**	
	Addition of **cautions 2** to **5** to **Figure 25-17. Format of Port Mode Select Register (PMS)**	
	Addition of **caution** to **28.4.1 Data flash overview**	**CHAPTER 28 FLASH MEMORY**
	Modification of **cautions 2** and **3** in **28.7 Flash Memory Programming by Self-Programming**	
	Modification of **28.7.2 Flash shield window function**	
	Modification of **Table 28-14. Relationship between Flash Shield Window Function Setting/Change Methods and Commands**	
	Modification of throughout the document	**CHAPTER 32 ELECTRICAL SPECIFICATIONS (T_A = –40 to +85°C)**
	Modification of throughout the document	**CHAPTER 33 ELECTRICAL SPECIFICATIONS (T_A = –40 to +105°C)**
	Addition of part number and package drawings are updated.	**CHAPTER 34 PACKAGE DRAWINGS**

RL78/L13 User’s Manual: Hardware

Publication Date: Rev.2.30 Aug 31, 2023

Published by: Renesas Electronics Corporation

RL78/L13

Renesas Electronics Corporation

R01UH0382EJ0230