R0E55630EDMB00

Debugging MCU Board for 144-pin 0.5mm-pitch LQFP of the RX630 Group

R20UT0583EJ0200
Rev.2.00
Mar 05, 2014

1. Overview

This product is for MCUs of the RX630 group in the PLQP0144KA-A package.

With the E20 emulator, the emulator occupies some user port pins for controlling the emulator and output of trace information. These user port pins must be connected with a 38-pin connector installed on the user system.

With the debugging MCU board, however, all user port pins are available for the user system. In addition, you do not need to install a 38-pin connector on the user system.

Figure 1 shows the configuration of a system that includes the debugging MCU board and the E20.

Be sure to read section 7, Notes on Usage, before using the debugging MCU board.

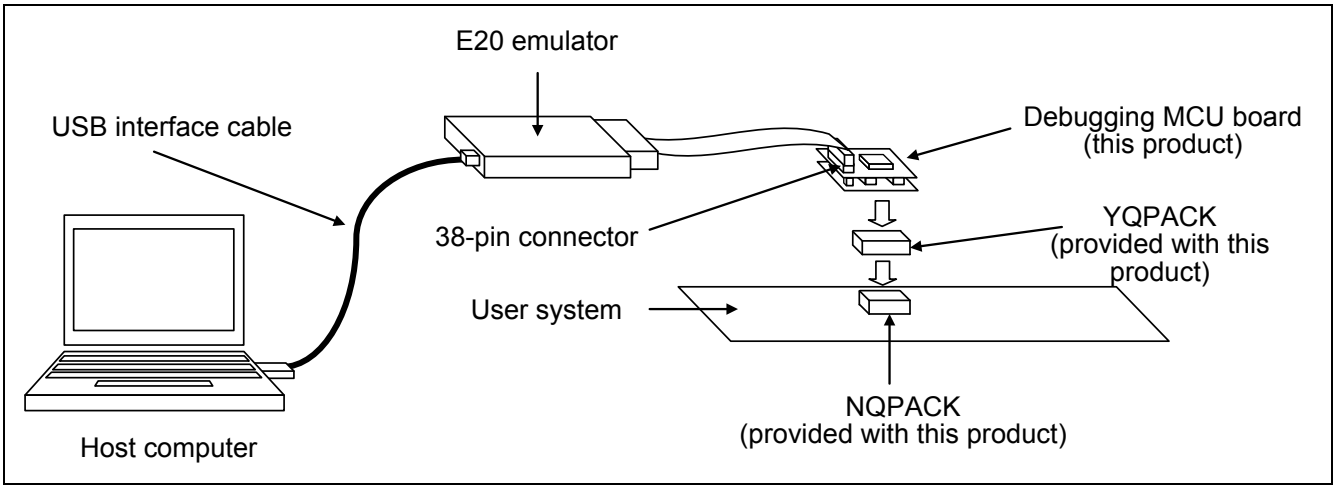

Figure 1 System Configuration

2. Components

Table 1 lists the components of the debugging MCU board. Check that you have all of the components when you unpack the box.

Table 1 Components of the Debugging MCU Board

Component	Quantity	Remarks
Debugging MCU board common part (R0E55630EVKZ00)	1	For the dimensions, refer to section 6, Dimensions of the Debugging MCU Board.
Converter board (R0E55630EPFK00)	1	For the dimensions, refer to section 6, Dimensions of the Debugging MCU Board.
YQPACK144SD (from Tokyo Eletech Corporation)	1	Connector to be placed between the debugging MCU board and the NQPACK.
NQPACK144SD-ND (from Tokyo Eletech Corporation)	1	IC socket for mounting on the user system
YQ-GUIDE-S1 (from Tokyo Eletech Corporation)	4	Screws for fastening the YQPACK to the NQPACK.
Cautions in handling	1	Cautions when handling the products of Tokyo Eletech Corporation
User's Manual (English and Japanese)	1 for each	This manual (English)

Note: NQPACK, YQPACK, YQSOCKET, YQ-GUIDE, HQPACK, TQPACK, TQSOCKET, CSSOCKET, CSPLUG/W, and LSPACK are trademarks of Tokyo Eletech Corporation.

Important

⚠CAUTION

Caution to Be Taken for Disposal:

Penalties may be applicable for incorrect disposal of this waste, in accordance with your national legislation.

European Union regulatory notices:

The WEEE (Waste Electrical and Electronic Equipment) regulations put responsibilities on producers for the collection and recycling or disposal of electrical and electronic waste. Return of WEEE under these regulations is applicable in the European Union only. This equipment (including all accessories) is not intended for household use. After use the equipment cannot be disposed of as household waste, and the WEEE must be treated, recycled and disposed of in an environmentally sound manner. Renesas Electronics Europe GmbH can take back end of life equipment, register for this service at “http://www.renesas.eu/weee”.

Cautions to Be Taken for Handling This Product:

- Take full care not to touch any parts or cause short circuits on this product.
- Protect this product from excessive physical shock.
- Do not alter this product. If any alteration is attempted, this product will no longer be supported.
- The MCU installed on this product is only for use in debugging. Do not remove the MCU from the board to use it for other purposes.
- For purchasing the NQPACK144SD-ND, YQPACK144SD and HQPACK144SD, contact the following:
  Tokyo Eletech Corporation http://www.tetc.co.jp/e_index.htm

Cautions to Be Taken for Turning On the Power:

- Do not apply a power voltage that is beyond the range guaranteed for the MCU.
- Only supply power to this product and connected parts after having connected all cables.

Caution for Use Temperature:

This product is to be used in an environment with a maximum ambient temperature of 35°C. Care should be taken that this temperature is not exceeded.

European Union regulatory notices

This product complies with the following EU Directive.

Environmental Compliance and Certification:

- Waste Electrical and Electronic Equipment (WEEE) Directive 2012/19/EC

3. Specifications

Table 2 shows the functional specifications of the debugging MCU board.

Table 2 Specifications of the Debugging MCU Board

Item No.	Item	Specification
1	MCU for use	•RX630-group MCUs in PLQP0144KA-A packages
2	The MCU type name installed on the debugging MCU board	•R5F5630EDDFC (ROM: 2 Mbytes, RAM: 128 Kbytes, Data flash: 32 Kbytes)
3	Power supply	•Power (VCC = AVCC0 = VREFH = VCC_USB) at 2.7[*1] to 3.6 V is supplied from the user system. •Power (VREFH0) at 2.7 to AVCC0 is supplied from the user system. •Power (VBATT) at 2.3 to 3.6 V is supplied from the user system. •The state of power supply can be monitored through the test pins (TP1 for VREFH0, TP2 for AVCC0, TP3 for VREFH, TP4 for VBATT, TP5 for VCC_USB, TP6 for VCC, and TP7 for GND).
4	System clock (EXTAL)	•4 to 16 MHz clock signals are supplied from the user system.
5	Sub clock (XCIN)	•32.768 kHz clock signals are supplied from the user system.

Note*: 1. Use the debugging MCU board at a voltage (VCC > V_{POR}) that doesn't make the MCU enter the state of power on reset.

4. Reset Circuit

Figure 2 shows the reset circuit, with the level on the RES# pin pulled up by a 510-kΩ resistor.

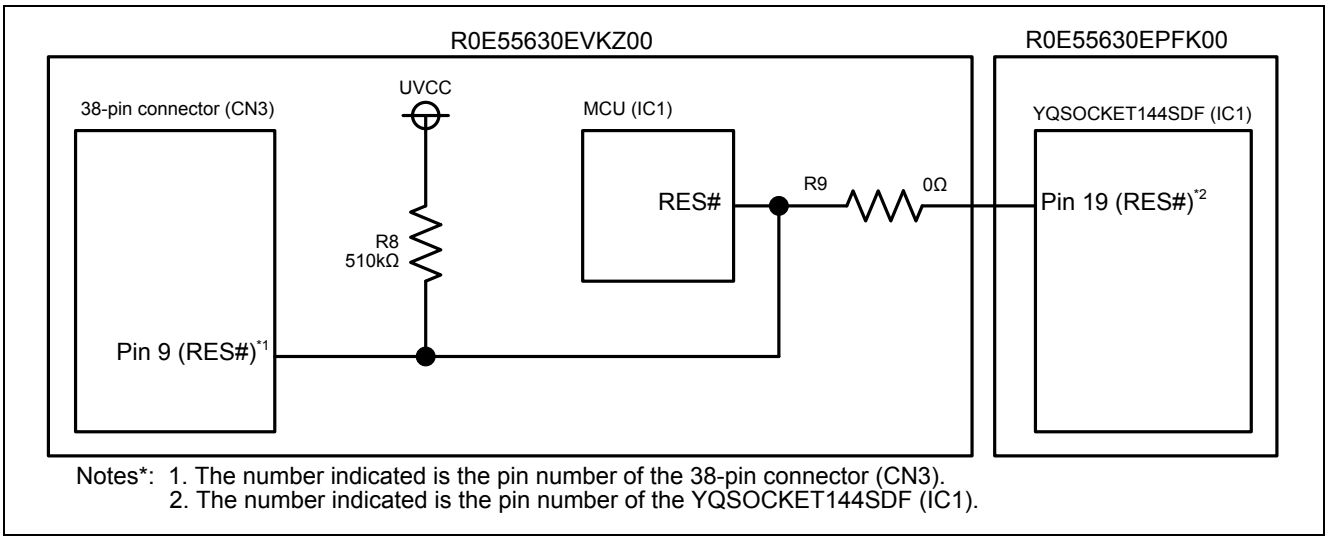

Figure 2 Reset Circuit on the Debugging MCU Board

5. Connection

To connect the debugging MCU board and user system, follow the procedure below.

The R0E55630EDMB00 (this product) can be used for debugging and on-board evaluation in common by mounting the NQPACK144SD-ND on the user system.

(1) For debugging

1. Mount the NQPACK144SD-ND on the user system. Be sure to check that the location of pin 1 is correct.
2. Install the YQPACK144SD after checking for a match with the position of pin 1 for the NQPACK144SD-ND. Then use the YQ-GUIDE-S1 to affix the YQPACK144SD to the NQPACK144SD-ND.

   - **Do NOT use the screws included with the YQPACK144SD for fixing the YQPACK144SD.**
   - **Do NOT use the screwdriver included with the NQPACK144SD-ND for fixing the YQ-GUIDE-S1. That is used only for the HQPACK144SD. Note that you need to provide your own screwdriver.**

3. Connect the R0E55630EDMB00 after checking for a match with the position of pin 1 for the YQPACK144SD.
4. Install the connector of the flexible cable from the E20 emulator to the 38-pin connector on the R0E55630EDMB00.
   Hold the R0E55630EDMB00 while connecting the cable to avoid imposing heavy pressure on the 38-pin connector of the R0E55630EDMB00.

(2) For on-board evaluation

5. Mount an MCU with on-chip flash memory and the HQPACK144SD (not included) in order on the NQPACK144SD-ND on the user system.

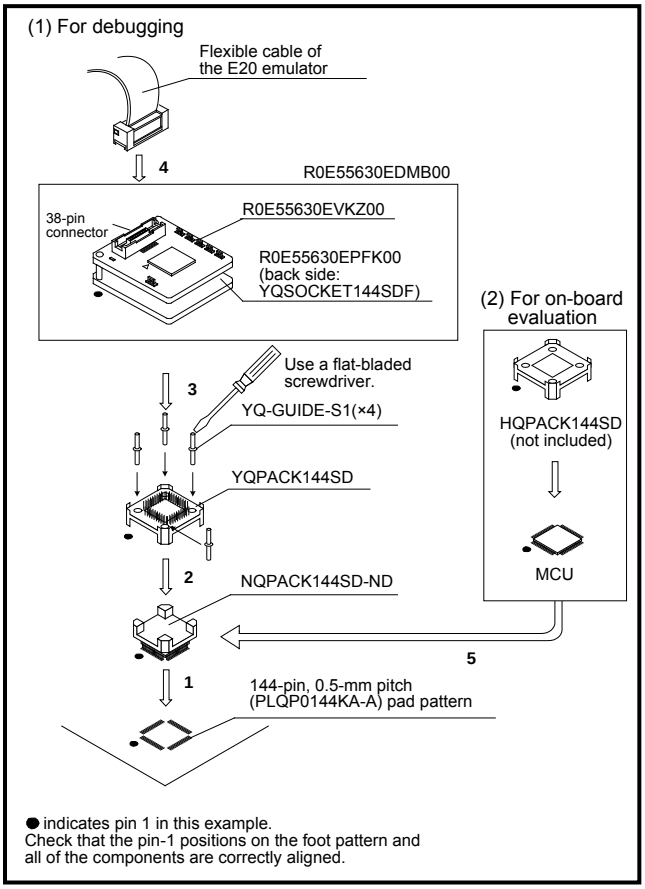

Figure 3 Connections of the User System and This Product

Before using the R0E55630EDMB00, be sure to read section 7, Notes on Usage.

⚠ WARNING

Warnings to Be Taken for Connection:

- Always switch OFF the emulator, this product, and the user system before connecting or disconnecting the emulator. Failure to do so will create a FIRE HAZARD and will damage the emulator, this product, and the user system.
- Make sure that the connectors on both ends of the user-system interface cable are facing the right way relative to the user-side connector on the emulator and the 38-pin connector on this product, respectively. Incorrect connection will create a FIRE HAZARD and will damage the emulator, this product, and the user system.

⚠ CAUTION

Cautions to Be Taken for Mounting the NQPACK:

- Check the locations of pin 1 before mounting the NQPACK.
- The tightening torque must be no greater than 0.054 N•m. If the applied torque is not accurately measurable, stop tightening when the force required to turn the screw (YQ-GUIDE-S1) becomes significantly greater than that required at the start of tightening. Tightening a screw too much may break the screw hole of the NQPACK or lead to a faulty connection by cracking solder on the NQPACK side.
- Failure of conduction during operation may be due to a crack in the solder for the NQPACK. Check conduction with a tester and re-solder the NQPACK as required.

6. Dimensions of the Debugging MCU Board

Figures 4 shows the dimensions and reference pad pattern of the debugging MCU board (R0E55630EDMB00).

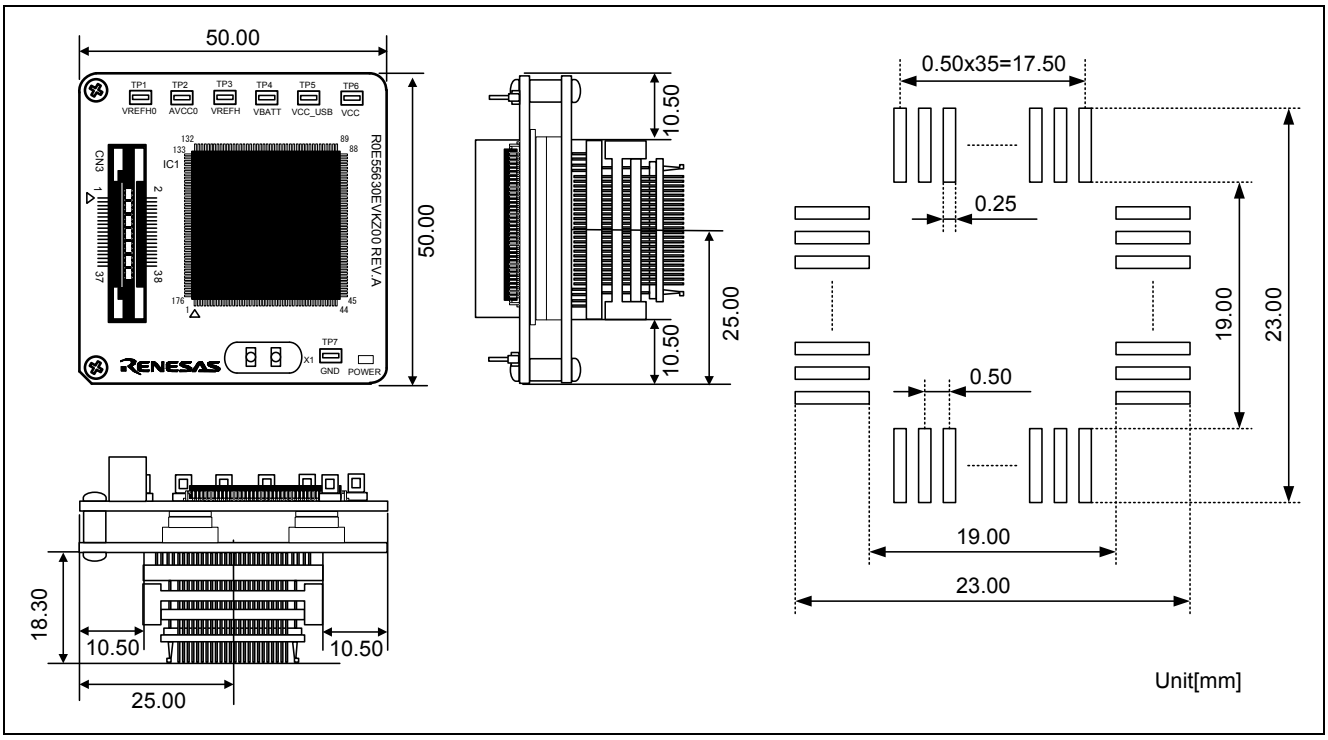

Figure 4 Reference Foot Pattern and Dimensions of This Product (R0E55630EDMB00)

7. Notes on Usage

READ the following warnings before using the debugging MCU board. Incorrect operation will damage the debugging MCU board and user system. The USER PROGRAM will be LOST.

Notes on Connecting the Debugging MCU Board:

- Cables must not be connected or removed while the power is on.
- Before connecting the debugging MCU board and user system, check that the pin 1 locations on both sides are correctly aligned with each other.

Note on Rewriting the Flash Memory:

- The number of times that the flash memory in the MCU installed on the debugging MCU board can be programmed is limited. If an error in erasure occurs during debugging, replace the debugging MCU board.

Notes on Debugging:

- The debugging MCU board is only usable for debugging when it is connected to the user system.
- Debugging by the debugging MCU board alone is not supported.

Note on Starting the Debugger and Selecting the MCU Type:

- Select the MCU type for use in the device name section of the [Initial Settings] dialog box on initiation of the debugger.
- When using the High-performance Embedded Workshop:
  When debugging an MCU with internal ROM size of 1 MB or 768 KB, select R5F5630E in the device name section of the [Initial Settings] dialog box on initiation of the debugger.
- When using the e^{2}studio:
  When debugging an MCU with internal ROM size of 1 MB or 768 KB, select R5F5630E for the target device.

Note on Differences between the MCU and the Debugging MCU Board:

- The pin assignment of the RX630-group MCU (R5F5630EDDFC) mounted on the debugging MCU board is converted to match that of the actual MCU package by the converter board. Refer to the "RX630 Group User's Manual: Hardware" for the difference of peripheral functions between the debugging MCU board and the actual MCU.
- Note that if the MCU to be debugged has the ROM/RAM size which is different from that of the R5F5630E MCU, access can be made to the differential areas.

Notes on Designing the User System:

- Pull the levels on the EMLE pin down to 4.7 kΩ to 10 kΩ.
- Pull the levels on the MD pin up to 4.7 kΩ to 10 kΩ, and select the single-chip mode.
- The output of the reset circuit of the user system must be open collector.

Note on the Flash Programming Software Products (Flash Development Toolkit, Renesas Flash Programmer, etc.):

- Do not use the flash programming software products when using the debugging MCU board.

Note on the Writing the On-chip Flash Memory Mode:

- Do not use the writing the on-chip flash memory mode when using the debugging MCU board.

Note on the A/D Converter:

- The characteristics of the A/D converter differ from those of actual MCU because there are a converter board and other devices between the MCU and the user system.

Note on the Hot Plug-in Function:

- Do not use the hot plug-in function when using the debugging MCU board.

Note on Communication Interface:

- Use this product via JTAG communication.

Precautions

This product is only intended for use in a laboratory environment under ambient temperature and humidity conditions. A safe separation distance should be used between this and any sensitive equipment. Its use outside the laboratory, classroom, study area or similar such area invalidates conformity with the protection requirements of the Electromagnetic Compatibility Directive and could lead to prosecution.

The product generates, uses, and can radiate radio frequency energy and may cause harmful interference to radio communications. However, there is no guarantee that interference will not occur in a particular installation. If this equipment causes harmful interference to radio or television reception, which can be determined by turning the equipment off or on, you are encouraged to try to correct the interference by one or more of the following measures;

- ensure attached cables do not lie across the equipment
- reorient the receiving antenna
- increase the distance between the equipment and the receiver
- connect the equipment into an outlet on a circuit different from that which the receiver is connected
- power down the equipment when not in use
- consult the dealer or an experienced radio/TV technician for help

NOTE: It is recommended that wherever possible shielded interface cables are used.

The product is potentially susceptible to certain EMC phenomena. To mitigate against them it is recommended that the following measures be undertaken;

- The user is advised that mobile phones should not be used within 10m of the product when in use.
- The user is advised to take ESD precautions when handling the equipment.

This product does not represent an ideal reference design for an end product and does not fulfill the regulatory standards for an end product.

8. Warranty

1. This product comes with a one-year warranty after purchase.

   Should the product break down or be damaged while you're using it under normal condition based on its user's manual, it will be repaired or replaced free of cost.

2. Note, however, that if your product's fault or damage is raised by any one of the following causes, the warranty is void.

   a) Misuse or abuse of the product or its use under other abnormal conditions

   b) Improper handling of the product after purchase, such as dropping of the product when it is transported or moved

   c) Other pieces of equipment connected to the product

   d) Fire, earthquakes, thunderbolts, floods, or other natural disasters or abnormal voltages, etc.

   e) Modifications, repairs, adjustments, or other acts made to the product by other than Renesas Electronics Corporation.

   In the above cases, contact your local distributor.

   If your product is being leased, consult the leasing company or the owner.

Notice

1. Descriptions of circuits, software and other related information in this document are provided only to illustrate the operation of semiconductor products and application examples. You are fully responsible for the incorporation of these circuits, software, and information in the design of your equipment. Renesas Electronics assumes no responsibility for any losses incurred by you or third parties arising from the use of these circuits, software, or information.
2. Renesas Electronics has used reasonable care in preparing the information included in this document, but Renesas Electronics does not warrant that such information is error free. Renesas Electronics assumes no liability whatsoever for any damages incurred by you resulting from errors in or omissions from the information included herein.
3. Renesas Electronics does not assume any liability for infringement of patents, copyrights, or other intellectual property rights of third parties by or arising from the use of Renesas Electronics products or technical information described in this document. No license, express, implied or otherwise, is granted hereby under any patents, copyrights or other intellectual property rights of Renesas Electronics or others.
4. You should not alter, modify, copy, or otherwise misappropriate any Renesas Electronics product, whether in whole or in part. Renesas Electronics assumes no responsibility for any losses incurred by you or third parties arising from such alteration, modification, copy or otherwise misappropriation of Renesas Electronics product.
5. Renesas Electronics products are classified according to the following two quality grades: "Standard" and "High Quality". The recommended applications for each Renesas Electronics product depends on the product's quality grade, as indicated below.
   "Standard": Computers; office equipment; communications equipment; test and measurement equipment; audio and visual equipment; home electronic appliances; machine tools; personal electronic equipment; and industrial robots etc.
   "High Quality": Transportation equipment (automobiles, trains, ships, etc.); traffic control systems; anti-disaster systems; anti-crime systems; and safety equipment etc.
   Renesas Electronics products are neither intended nor authorized for use in products or systems that may pose a direct threat to human life or bodily injury (artificial life support devices or systems, surgical implantations etc.), or may cause serious property damages (nuclear reactor control systems, military equipment etc.). You must check the quality grade of each Renesas Electronics product before using it in a particular application. You may not use any Renesas Electronics product for any application for which it is not intended. Renesas Electronics shall not be in any way liable for any damages or losses incurred by you or third parties arising from the use of any Renesas Electronics product for which the product is not intended by Renesas Electronics.
6. You should use the Renesas Electronics products described in this document within the range specified by Renesas Electronics, especially with respect to the maximum rating, operating supply voltage range, movement power voltage range, heat radiation characteristics, installation and other product characteristics. Renesas Electronics shall have no liability for malfunctions or damages arising out of the use of Renesas Electronics products beyond such specified ranges.
7. Although Renesas Electronics endeavors to improve the quality and reliability of its products, semiconductor products have specific characteristics such as the occurrence of failure at a certain rate and malfunctions under certain use conditions. Further, Renesas Electronics products are not subject to radiation resistance design. Please be sure to implement safety measures to guard them against the possibility of physical injury, and injury or damage caused by fire in the event of the failure of a Renesas Electronics product, such as safety design for hardware and software including but not limited to redundancy, fire control and malfunction prevention, appropriate treatment for aging degradation or any other appropriate measures. Because the evaluation of microcomputer software alone is very difficult, please evaluate the safety of the final products or systems manufactured by you.
8. Please contact a Renesas Electronics sales office for details as to environmental matters such as the environmental compatibility of each Renesas Electronics product. Please use Renesas Electronics products in compliance with all applicable laws and regulations that regulate the inclusion or use of controlled substances, including without limitation, the EU RoHS Directive. Renesas Electronics assumes no liability for damages or losses occurring as a result of your noncompliance with applicable laws and regulations.
9. Renesas Electronics products and technology may not be used for or incorporated into any products or systems whose manufacture, use, or sale is prohibited under any applicable domestic or foreign laws or regulations. You should not use Renesas Electronics products or technology described in this document for any purpose relating to military applications or use by the military, including but not limited to the development of weapons of mass destruction. When exporting the Renesas Electronics products or technology described in this document, you should comply with the applicable export control laws and regulations and follow the procedures required by such laws and regulations.
10. It is the responsibility of the buyer or distributor of Renesas Electronics products, who distributes, disposes of, or otherwise places the product with a third party, to notify such third party in advance of the contents and conditions set forth in this document, Renesas Electronics assumes no responsibility for any losses incurred by you or third parties as a result of unauthorized use of Renesas Electronics products.
11. This document may not be reproduced or duplicated in any form, in whole or in part, without prior written consent of Renesas Electronics.
12. Please contact a Renesas Electronics sales office if you have any questions regarding the information contained in this document or Renesas Electronics products, or if you have any other inquiries.

(Note 1) "Renesas Electronics" as used in this document means Renesas Electronics Corporation and also includes its majority-owned subsidiaries.

(Note 2) "Renesas Electronics product(s)" means any product developed or manufactured by or for Renesas Electronics.

SALES OFFICES Renesas Electronics Corporation http://www.renesas.com

Refer to "http://www.renesas.com/" for the latest and detailed information.

Renesas Electronics America Inc.
2880 Scott Boulevard Santa Clara, CA 95050-2554, U.S.A.
Tel: +1-408-588-6000, Fax: +1-408-588-6130

Renesas Electronics Canada Limited
1101 Nicholson Road, Newmarket, Ontario L3Y 9C3, Canada
Tel: +1-905-898-5441, Fax: +1-905-898-3220

Renesas Electronics Europe Limited
Dukes Meadow, Millboard Road, Bourne End, Buckinghamshire, SL8 5FH, U.K
Tel: +44-1628-651-700, Fax: +44-1628-651-804

Renesas Electronics Europe GmbH
Arcadiastrasse 10, 40472 Düsseldorf, Germany
Tel: +49-211-65030, Fax: +49-211-6503-1327

Renesas Electronics (China) Co., Ltd.
7th Floor, Quantum Plaza, No.27 ZhiChunLu Haidian District, Beijing 100083, P.R.China
Tel: +86-10-8235-1155, Fax: +86-10-8235-7679

Renesas Electronics (Shanghai) Co., Ltd.
Unit 301, Tower A, Central Towers, 555 LanGao Rd., Putuo District, Shanghai, China
Tel: +86-21-2226-0888, Fax: +86-21-2226-0999

Renesas Electronics Hong Kong Limited
Unit 1601-1613, 16/F., Tower 2, Grand Century Place, 193 Prince Edward Road West, Mongkok, Kowloon, Hong Kong
Tel: +852-2886-9318, Fax: +852 2886-9022/9044

Renesas Electronics Taiwan Co., Ltd.
13F, No. 363, Fu Shing North Road, Taipei, Taiwan
Tel: +886-2-8175-9600, Fax: +886 2-8175-9670

Renesas Electronics Singapore Pte. Ltd.
80 Bendemeer Road, Unit #06-02 Hyflux Innovation Centre Singapore 339949
Tel: +65-6213-0200, Fax: +65-6213-0300

Renesas Electronics Malaysia Sdn.Bhd.
Unit 906, Block B, Menara Amcorp, Amcorp Trade Centre, No. 18, Jln Persiaran Barat, 46050 Petaling Jaya, Selangor Darul Ehsan, Malaysia
Tel: +60-3-7955-9390, Fax: +60-3-7955-9510

Renesas Electronics Korea Co., Ltd.
12F., 234 Teheran-ro, Gangnam-Gu, Seoul, 135-080, Korea
Tel: +82-2-558-3737, Fax: +82-2-558-5141

CAUTION If the requirements shown in the "CAUTION" sentences are ignored, the equipment may cause personal injury or damage to the products.

Renesas Tools Website http://www.renesas.com/tools

All trademarks and registered trademarks are the property of their respective owners.

©2012- 2014 Renesas Electronics Corporation and Renesas Solutions Corp.

Colophon 3.0