To our customers,

Old Company Name in Catalogs and Other Documents

On April 1st, 2010, NEC Electronics Corporation merged with Renesas Technology Corporation, and Renesas Electronics Corporation took over all the business of both companies. Therefore, although the old company name remains in this document, it is a valid Renesas Electronics document. We appreciate your understanding.

Renesas Electronics website: http://www.renesas.com

April 1st, 2010
Renesas Electronics Corporation

Issued by: Renesas Electronics Corporation (http://www.renesas.com)

Send any inquiries to http://www.renesas.com/inquiry.

Notice

1. All information included in this document is current as of the date this document is issued. Such information, however, is subject to change without any prior notice. Before purchasing or using any Renesas Electronics products listed herein, please confirm the latest product information with a Renesas Electronics sales office. Also, please pay regular and careful attention to additional and different information to be disclosed by Renesas Electronics such as that disclosed through our website.
2. Renesas Electronics does not assume any liability for infringement of patents, copyrights, or other intellectual property rights of third parties by or arising from the use of Renesas Electronics products or technical information described in this document. No license, express, implied or otherwise, is granted hereby under any patents, copyrights or other intellectual property rights of Renesas Electronics or others.
3. You should not alter, modify, copy, or otherwise misappropriate any Renesas Electronics product, whether in whole or in part.
4. Descriptions of circuits, software and other related information in this document are provided only to illustrate the operation of semiconductor products and application examples. You are fully responsible for the incorporation of these circuits, software, and information in the design of your equipment. Renesas Electronics assumes no responsibility for any losses incurred by you or third parties arising from the use of these circuits, software, or information.
5. When exporting the products or technology described in this document, you should comply with the applicable export control laws and regulations and follow the procedures required by such laws and regulations. You should not use Renesas Electronics products or the technology described in this document for any purpose relating to military applications or use by the military, including but not limited to the development of weapons of mass destruction. Renesas Electronics products and technology may not be used for or incorporated into any products or systems whose manufacture, use, or sale is prohibited under any applicable domestic or foreign laws or regulations.
6. Renesas Electronics has used reasonable care in preparing the information included in this document, but Renesas Electronics does not warrant that such information is error free. Renesas Electronics assumes no liability whatsoever for any damages incurred by you resulting from errors in or omissions from the information included herein.
7. Renesas Electronics products are classified according to the following three quality grades: "Standard", "High Quality", and "Specific". The recommended applications for each Renesas Electronics product depends on the product's quality grade, as indicated below. You must check the quality grade of each Renesas Electronics product before using it in a particular application. You may not use any Renesas Electronics product for any application categorized as "Specific" without the prior written consent of Renesas Electronics. Further, you may not use any Renesas Electronics product for any application for which it is not intended without the prior written consent of Renesas Electronics. Renesas Electronics shall not be in any way liable for any damages or losses incurred by you or third parties arising from the use of any Renesas Electronics product for an application categorized as "Specific" or for which the product is not intended where you have failed to obtain the prior written consent of Renesas Electronics. The quality grade of each Renesas Electronics product is "Standard" unless otherwise expressly specified in a Renesas Electronics data sheets or data books, etc.

   "Standard": Computers; office equipment; communications equipment; test and measurement equipment; audio and visual equipment; home electronic appliances; machine tools; personal electronic equipment; and industrial robots.

   "High Quality": Transportation equipment (automobiles, trains, ships, etc.); traffic control systems; anti-disaster systems; anti-crime systems; safety equipment; and medical equipment not specifically designed for life support.

   "Specific": Aircraft; aerospace equipment; submersible repeaters; nuclear reactor control systems; medical equipment or systems for life support (e.g. artificial life support devices or systems), surgical implantations, or healthcare intervention (e.g. excision, etc.), and any other applications or purposes that pose a direct threat to human life.
8. You should use the Renesas Electronics products described in this document within the range specified by Renesas Electronics, especially with respect to the maximum rating, operating supply voltage range, movement power voltage range, heat radiation characteristics, installation and other product characteristics. Renesas Electronics shall have no liability for malfunctions or damages arising out of the use of Renesas Electronics products beyond such specified ranges.
9. Although Renesas Electronics endeavors to improve the quality and reliability of its products, semiconductor products have specific characteristics such as the occurrence of failure at a certain rate and malfunctions under certain use conditions. Further, Renesas Electronics products are not subject to radiation resistance design. Please be sure to implement safety measures to guard them against the possibility of physical injury, and injury or damage caused by fire in the event of the failure of a Renesas Electronics product, such as safety design for hardware and software including but not limited to redundancy, fire control and malfunction prevention, appropriate treatment for aging degradation or any other appropriate measures. Because the evaluation of microcomputer software alone is very difficult, please evaluate the safety of the final products or system manufactured by you.
10. Please contact a Renesas Electronics sales office for details as to environmental matters such as the environmental compatibility of each Renesas Electronics product. Please use Renesas Electronics products in compliance with all applicable laws and regulations that regulate the inclusion or use of controlled substances, including without limitation, the EU RoHS Directive. Renesas Electronics assumes no liability for damages or losses occurring as a result of your noncompliance with applicable laws and regulations.
11. This document may not be reproduced or duplicated, in any form, in whole or in part, without prior written consent of Renesas Electronics.
12. Please contact a Renesas Electronics sales office if you have any questions regarding the information contained in this document or Renesas Electronics products, or if you have any other inquiries.

(Note 1) "Renesas Electronics" as used in this document means Renesas Electronics Corporation and also includes its majority-owned subsidiaries.

(Note 2) "Renesas Electronics product(s)" means any product developed or manufactured by or for Renesas Electronics.

Application Note

78K0R/Lx3

Sample Program (Initial Settings)

LED Lighting Switch Control

This application note describes a sample program that executes the basic initial settings of the 78K0R/Lx3 microcontroller, such as setting up the option byte, specifying the clock frequency, and setting up the I/O ports.

Target devices

78K0R/LF3 microcontroller
78K0R/LG3 microcontroller
78K0R/LH3 microcontroller

CONTENTS

CHAPTER 1 OVERVIEW 3
CHAPTER 2 CIRCUIT DIAGRAM 4
2.1 Circuit Diagram 4
2.2 Used Devices Other than Microcontroller 4
CHAPTER 3 SOFTWARE 5
3.1 Included Files 5
3.2 Internal Peripheral Functions to Be Used 6
3.3 Initial Settings and Operation Overview 6
3.4 Flow Chart 7
CHAPTER 4 SETTING METHODS 8
4.1 Setting Up Option Byte 9
4.2 Setting Up Vector Table 14
4.3 Setting Up Stack Pointer 15
4.4 Setting Up and Controlling Watchdog Timer 16
4.5 Setting Up Clock 17
4.6 Setting Up Ports 23
4.7 Main Processing 28
CHAPTER 5 RELATED DOCUMENTS 30
APPENDIX A PROGRAM LIST 31
APPENDIX B REVISION HISTORY 56

Document No. U20025EJ1V0AN00 (1st edition)
Date Published September 2009 N

© NEC Electronics Corporation 2009
Printed in Japan

- The information in this document is current as of July, 2009. The information is subject to change without notice. For actual design-in, refer to the latest publications of NEC Electronics data sheets or data books, etc., for the most up-to-date specifications of NEC Electronics products. Not all products and/or types are available in every country. Please check with an NEC Electronics sales representative for availability and additional information.
- No part of this document may be copied or reproduced in any form or by any means without the prior written consent of NEC Electronics. NEC Electronics assumes no responsibility for any errors that may appear in this document.
- NEC Electronics does not assume any liability for infringement of patents, copyrights or other intellectual property rights of third parties by or arising from the use of NEC Electronics products listed in this document or any other liability arising from the use of such products. No license, express, implied or otherwise, is granted under any patents, copyrights or other intellectual property rights of NEC Electronics or others.
- Descriptions of circuits, software and other related information in this document are provided for illustrative purposes in semiconductor product operation and application examples. The incorporation of these circuits, software and information in the design of a customer's equipment shall be done under the full responsibility of the customer. NEC Electronics assumes no responsibility for any losses incurred by customers or third parties arising from the use of these circuits, software and information.
- While NEC Electronics endeavors to enhance the quality, reliability and safety of NEC Electronics products, customers agree and acknowledge that the possibility of defects thereof cannot be eliminated entirely. To minimize risks of damage to property or injury (including death) to persons arising from defects in NEC Electronics products, customers must incorporate sufficient safety measures in their design, such as redundancy, fire-containment and anti-failure features.
- NEC Electronics products are classified into the following three quality grades: "Standard", "Special" and "Specific". The "Specific" quality grade applies only to NEC Electronics products developed based on a customer-designated "quality assurance program" for a specific application. The recommended applications of an NEC Electronics product depend on its quality grade, as indicated below. Customers must check the quality grade of each NEC Electronics product before using it in a particular application.

  "Standard": Computers, office equipment, communications equipment, test and measurement equipment, audio and visual equipment, home electronic appliances, machine tools, personal electronic equipment and industrial robots.

  "Special": Transportation equipment (automobiles, trains, ships, etc.), traffic control systems, anti-disaster systems, anti-crime systems, safety equipment and medical equipment (not specifically designed for life support).

  "Specific": Aircraft, aerospace equipment, submersible repeaters, nuclear reactor control systems, life support systems and medical equipment for life support, etc.

  The quality grade of NEC Electronics products is "Standard" unless otherwise expressly specified in NEC Electronics data sheets or data books, etc. If customers wish to use NEC Electronics products in applications not intended by NEC Electronics, they must contact an NEC Electronics sales representative in advance to determine NEC Electronics' willingness to support a given application.

  (Note 1) "NEC Electronics" as used in this statement means NEC Electronics Corporation and also includes its majority-owned subsidiaries.

  (Note 2) "NEC Electronics products" means any product developed or manufactured by or for NEC Electronics (as defined above).

(M8E0909)

CHAPTER 1 OVERVIEW

This sample program executes the basic initial settings of the 78K0R/Lx3 microcontroller, such as setting up the option byte, specifying the clock frequency, and setting up the I/O ports. This sample program also turns on and off three LEDs using two switch inputs in the main processing that follows the completion of the initial settings.

(1) Primary initial settings

<Option byte settings>

- Disabling the watchdog timer
- Setting the internal high-speed oscillator frequency to 8 MHz
- Disabling LVI from being started by default
- Enabling on-chip debug to operate

<Settings during initialization immediately after a reset ends>

- Setting up I/O ports
- Securing a supply voltage of 2.7 V or more by using the function of low-voltage detector[Note]
- Specifying that the CPU/peripheral hardware clock run on the internal high-speed oscillation clock (8 MHz)
- Stopping the X1/XT1 oscillator

Note For details of the low-voltage detector, refer to the User's Manual.

(2) Main processing operation

Lighting of the LEDs (LED1, LED2, LED3) is controlled by detecting switch inputs (SW1, SW2) with the 78K0R/Lx3 microcontroller.

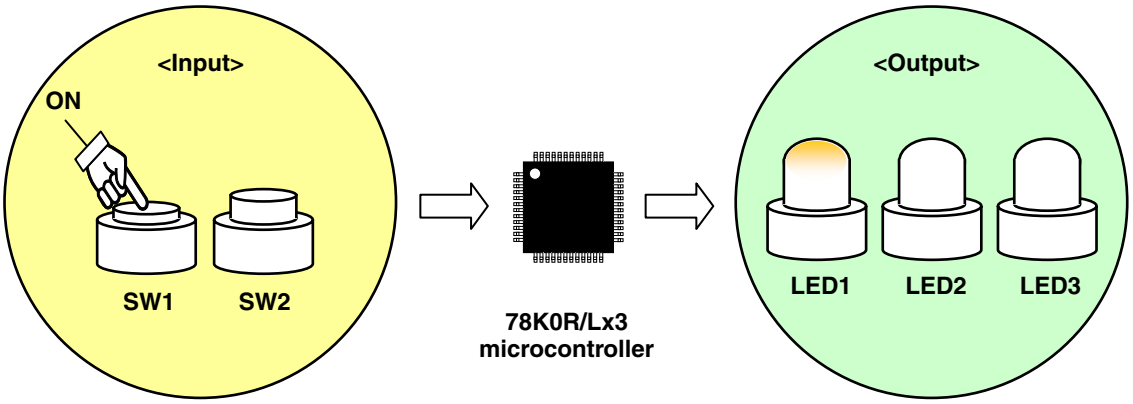

Switch Input		LED Output		
SW1	SW2	LED1	LED2	LED3
OFF	OFF	OFF	OFF	OFF
ON	OFF	ON	OFF	OFF
OFF	ON	OFF	ON	OFF
ON	ON	OFF	OFF	ON

Caution For cautions when using the device, refer to the User's Manual.

CHAPTER 2 CIRCUIT DIAGRAM

This chapter provides a circuit diagram and describes the devices used in this sample program other than the microcontroller.

2.1 Circuit Diagram

A circuit diagram is shown below.

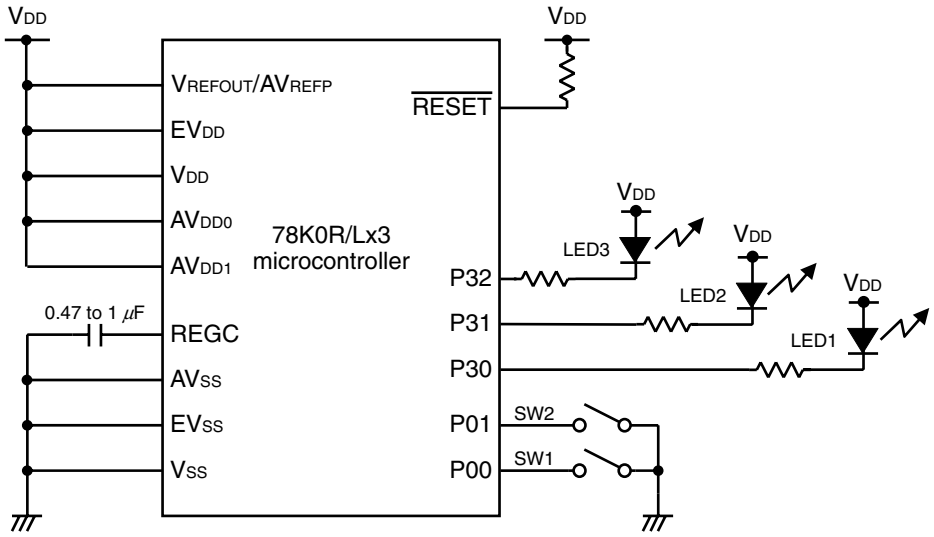

Cautions 1. Use the microcontroller at a voltage in the range of 2.94 V ≤ V_{DD} ≤ 5.5 V (because a low voltage is detected within in a range of 2.48 ±0.1 V < V_{DD}).

2. Make EV_{DD}, AV_{DD0}, AV_{DD1}, and V_{REFOUT}/AV_{REFP} the same potential as V_{DD}.

3. Make AV_{SS} the same potential as EV_{SS} or V_{SS} and connect it directly to GND.

4. Connect REGC to V_{SS} via a capacitor (0.47 to 1 μF).

5. Handle unused pins that are not shown in the circuit diagram as follows:

- **I/O ports: Set them to output mode and leave them open (unconnected).**
- **Input ports: Connect them independently to V_{DD} or V_{SS} via a resistor.**

6. In this sample program, the P40/TOOL0 and P41/TOOL1 pins are used for on-chip debugging.

2.2 Used Devices Other than Microcontroller

The following devices are used in addition to the microcontroller:

(1) Switches (SW1, SW2)

These switches are used as inputs to control the lighting of the LEDs.

(2) LEDs (LED1, LED2, LED3)

The LEDs are used as outputs corresponding to switch inputs.

CHAPTER 3 SOFTWARE

This chapter describes the files included in the compressed file to be downloaded, internal peripheral functions of the microcontroller to be used, and initial settings and provides an operation overview of the sample program and a flow chart.

3.1 Included Files

The following table shows the files included in the compressed file to be downloaded.

File Name	Description	Compressed (*.zip) File Included	
main.asm (Assembly language version) main.c (C language version)	Source file for hardware initialization processing and main processing of microcontroller	●Note	●Note
op.asm	Assembler source file for setting the option byte (This file is used for setting up the watchdog timer, selecting the internal high-speed oscillator frequency, and setting up the LVI default start function.)	●	●
78K0RLx3_sample_program.prw	Work space file for integrated development environment PM+		●
78K0RLx3_sample_program.prj	Project file for integrated development environment PM+		●

Note “main.asm” is included with the assembly language version, and “main.c” with the C language version.

Remark : Only the source file is included.

: The files to be used with integrated development environment PM+ are included.

3.2 Internal Peripheral Functions to Be Used

The following internal peripheral functions of the microcontroller are used in this sample program.

- P00, P01: Used for switch input.
- P00, P31, P32: Used to light LEDs.
- Low-voltage detector: Used to check that V_{DD} is 2.7 V or more.

3.3 Initial Settings and Operation Overview

In this sample program, initial settings including the selection of the clock frequency and setting of the I/O ports are performed.

After completion of the initial settings, the lighting of the three LEDs (LED1, LED2, LED3) is controlled in accordance with the combination of the two switch inputs (SW1, SW2).

The details are described in the state transition diagram shown below.

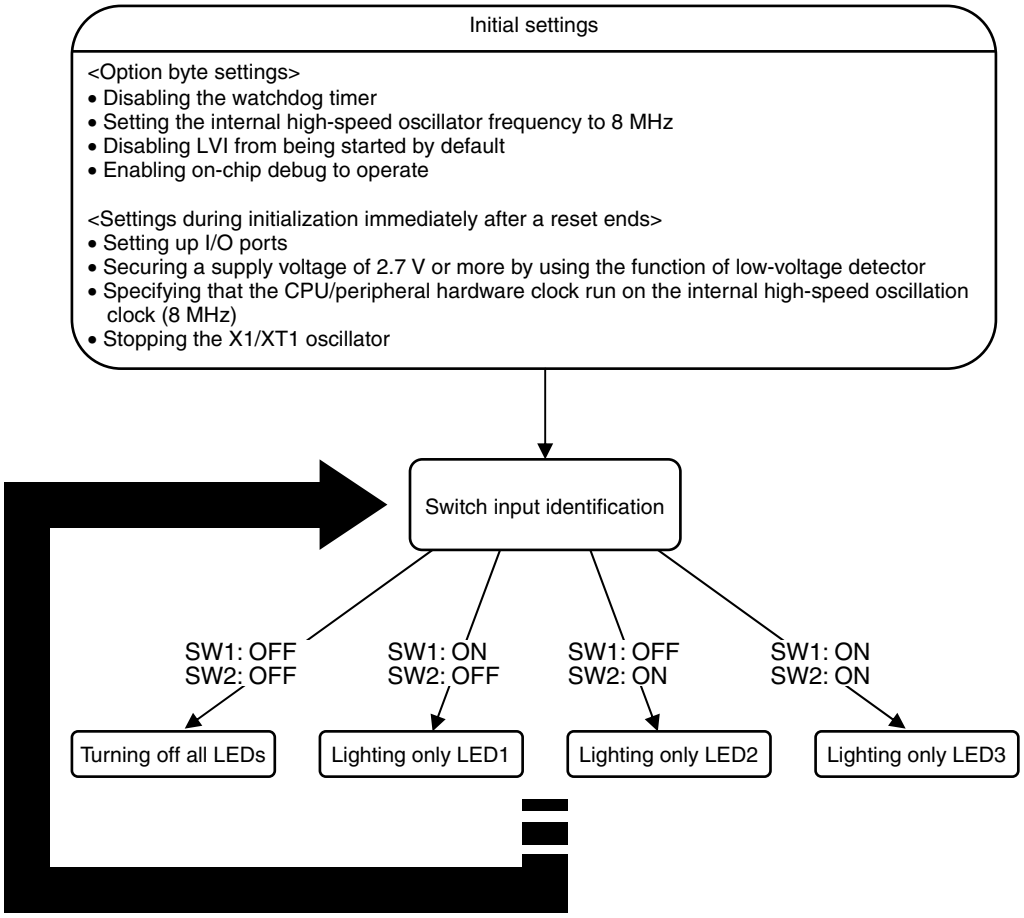

3.4 Flow Chart

A flow chart for the sample program is shown below.

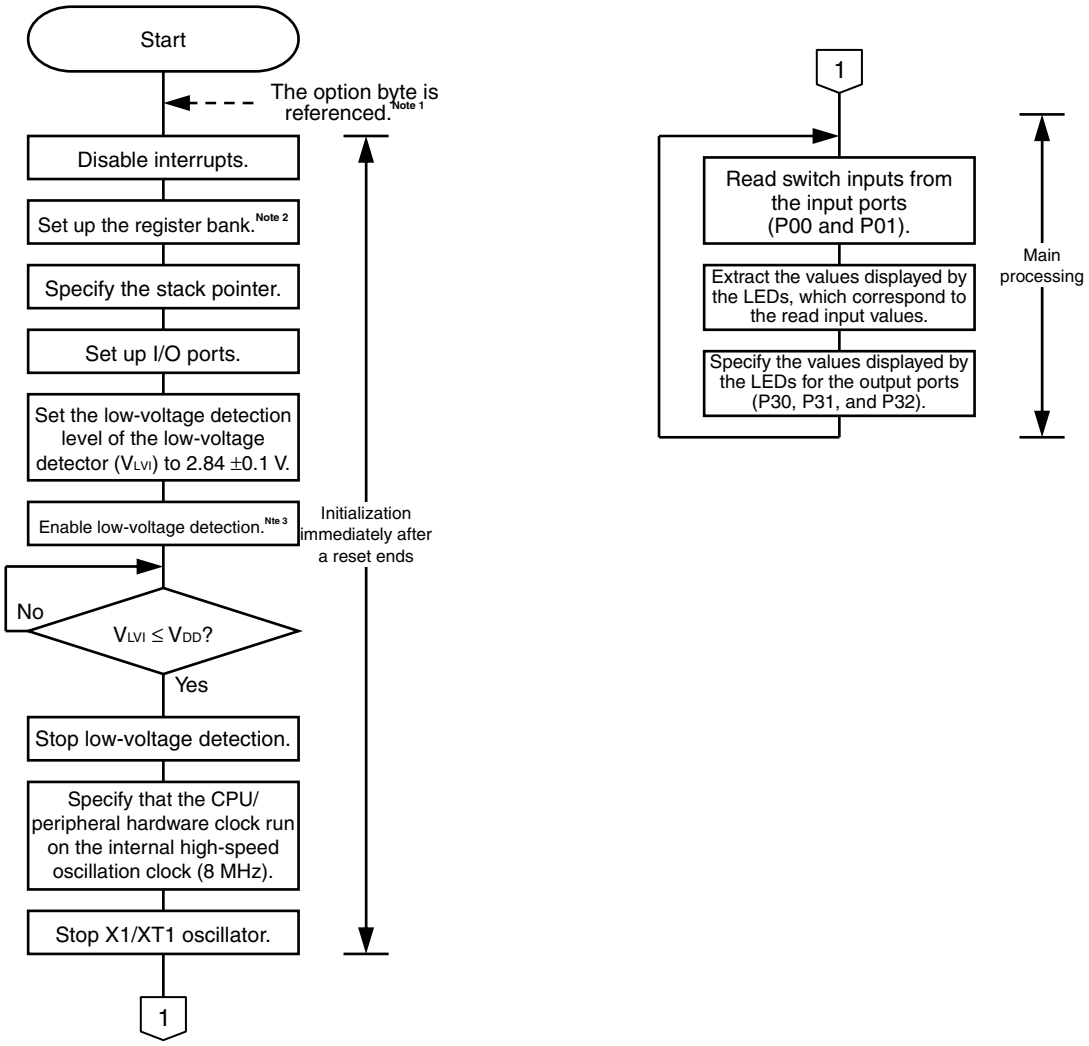

Notes 1. The option byte is automatically referenced by the microcontroller immediately after a reset ends. In this sample program, the following settings are specified using the option byte:

- Disabling the watchdog timer
- Setting the internal high-speed oscillator frequency to 8 MHz
- Disabling LVI from being started by default
- Enabling on-chip debug to operate

2. The general-purpose registers of the 78K0R/Lx3 Series microcontrollers are configured in four register banks so that the registers used for normal processing and those used when an interrupt occurs can be changed on a bank basis in order to create an efficient program. In this sample program, only register bank 0 is used.

3. The low-voltage detector is enabled, and then the system is made to wait at least 10 μs until the low-voltage detector stabilizes.

Caution With the sample program of the C language version, the settings of register banks and stack pointer are not described in the source program (main.c) because they are made by the start-up routine. For details of the start-up routine, refer to the CC78K0R Operation User's Manual.

CHAPTER 4 SETTING METHODS

This chapter describes how to set up the option byte, vector table, stack pointer, watchdog timer, clock frequency, and I/O ports, and provides details about the main processing.

To execute a program written in C, another program that performs ROMization to integrate the former program into the system and starts a user-created program (main function) is required. The latter program is called a startup routine. In general, a startup routine is the first program that runs after the microcontroller is reset (initialized). It initially sets up the hardware such as the CPU, memory, and I/O ports and specifies the initial settings for running the main function. In general, the startup routine, the main routine, and then subroutines are executed, and interrupts are serviced.

In the C version of this sample program, clock settings and initial settings for peripheral hardware are specified using the hdwinit function, after which the main function is executed. Therefore, the main processing is included in the main function. In the assembly language version, the microcontroller is reset (initialized), a program is executed from the RESET_START address written at address 0000H in the vector table, clock settings and initial settings for peripheral hardware are specified as by the hdwinit function in the C version, and then the main processing begins.

For details about the startup routine, refer to the chapter about the startup routine in the **CC78K0R Operation User's Manual**.

For how to set register, refer to the User's Manual.

For assembler instructions, refer to the **78K0R Microcontroller Instructions User's Manual**.

[Column] hdwinit function and main function

To create a program in C language, the hdwinit function is called to initialize peripheral devices (SFR) immediately after the CPU is reset. Initial settings, such as setting up the I/O ports and selecting the clock frequency are therefore basically included in the hdwinit function.

The main function is called after calling the hdwinit function, so main processing is included in the main function.

Do not call the hdwinit function from the main function. In this case, the hdwinit function is executed twice and the watchdog timer setting, which is only allowed to be specified once is executed twice. As a result, an internal reset signal is generated during the second execution disabling the program to advance from the initial setting.

For details, refer to the **CC78K0R Language User's Manual** and Processing to be executed first under Programming on the NEC Electronics FAQ Web page.

4.1 Setting Up Option Byte

The option byte must be set. The following items are set with the option byte.

(1) Watchdog timer counter operation setting
(2) Watchdog timer interval time setting
(3) Watchdog timer window open period setting
(4) LVI default start operation control
(5) Internal high-speed oscillator frequency selection
(6) On-chip debug operation control

Figure 4-1-1. Format of Option Byte (1/4)

Address: 000C0H/010C0H[Note 1]

WDTINT	WINDOW1	WINDOW0	WDTON	WDCS2	WDCS1	WDCS0	WDSTBYON

WDSTBYON	Operation control of watchdog timer counter (HALT/STOP mode)
0	Counter operation stopped in HALT/STOP mode[Note 2]
1	Counter operation enabled in HALT/STOP mode

WDCS2	WDCS1	WDCS0	Watchdog timer overflow time[Note 3]
0	0	0	$2^7/f_{IL}$ (3.88 ms)
0	0	1	$2^8/f_{IL}$ (7.76 ms)
0	1	0	$2^9/f_{IL}$ (15.52 ms)
0	1	1	$2^{10}/f_{IL}$ (31.03 ms)
1	0	0	$2^{12}/f_{IL}$ (124.12 ms)
1	0	1	$2^{14}/f_{IL}$ (496.48 ms)
1	1	0	$2^{15}/f_{IL}$ (992.97 ms)
1	**1**	**1**	$2^{17}/f_{IL}$ (3971.88 ms)

WDTON	Operation control of watchdog timer counter
0	Counter operation disabled (counting stopped after reset)
1	Counter operation enabled (counting started after reset)

WINDOW1	WINDOW0	Watchdog timer window open period[Note 2]
0	0	25%
0	1	50%
1	0	75%
1	**1**	100%

WDTINT	Use of Watchdog Timer Interval Interrupt
0	Interval interrupt is not used.
1	Interval interrupt is generated when 75% of overflow time is reached.

Notes 1. Set the same value as 000C0H to 010C0H when the boot swap operation is used because 000C0H is replaced by 010C0H.

2. The window open period is 100% when WDSTBYON = 0, regardless the value of WINDOW1 and WINDOW0.

3. ( ): f_{IL} = 33 kHz (MAX.)

Caution The watchdog timer continues its operation during self programming and EEPROM emulation of the flash memory. During processing, the interrupt acknowledge time is delayed. Set the overflow time and window size taking this delay into consideration.

Remarks 1. f_{IL}: Internal low-speed oscillation clock frequency

2. The values written in red in the above figure are specified in this sample program.

Figure 4-1-2. Format of Option Byte (2/4)

Address: 000C1H/010C1H[Note]

1	1	1	1	1	FRQSEL2	FRQSEL1	LVIOFF

LVIOFF	Setting of LVI on power application
0	LVI is ON by default (LVI default start function enabled) upon reset release (upon power application)
1	LVI is OFF by default (LVI default start function stopped) upon reset release (upon power application)

FRQSEL2	FRQSEL1	Internal high-speed oscillator frequency
1	0	1 MHz
1	**1**	8 MHz
Other than above		Setting prohibit

Note Set the same value as 000C0H to 010C0H when the boot swap operation is used because 000C0H is replaced by 010C0H.

Cautions 1. Be sure to set bits 7 to 3 to "1".

2. Even when the LVI default start function is used, if it is set to LVI operation prohibition (bit 7 (LVION) of the LVIM register = 0) by the software, it operates as follows:

- **Does not perform low-voltage detection during LVION = 0.**
- **If a reset is generated while LVION = 0, LVION will be re-set to 1 when the CPU starts after reset release. There is a period when low-voltage detection cannot be performed normally, however, when a reset occurs due to WDT and illegal instruction execution. This is due to the fact that while the pulse width detected by LVI must be 200 μs max., LVION = 1 is set upon reset occurrence, and the CPU starts operating without waiting for the LVI stabilization time.**

Remark The values written in red in the above figure are specified in this sample program.

Figure 4-1-3. Format of Option Byte (3/4)

Address: 000C2H/010C2H[Note]

1	1	1	1	1	1	1	1

Note Be sure to set FFH to 000C2H, as these addresses are reserved areas. Also set FFH to 010C2H when the boot swap operation is used because 000C2H is replaced by 010C2H.

Figure 4-1-4. Format of Option Byte (4/4)

Address: 000C3H/010C3H[Note]

OCDENSET	0	0	0	0	1	0	OCDERSD

OCDENSET	OCDERSD	On-chip debug operation control
0	0	Operation disabled
0	1	Setting prohibited
1	**0**	Operation enabled. Erase data of the flash memory in case authentication of the on-chip debug security ID fails.
1	1	Operation enabled. Does not erase data of the flash memory in case authentication of the on-chip debug security ID fails.

Note Set the same value as 000C3H to 010C3H when the boot swap operation is used because 000C3H is replaced by 010C3H.

Cautions 1. Bits 7 and 0 (OCDENSET and OCDERSD) can only be specified a value. Be sure to set 000010B to bits 6 to 1.

2. The value on bits 3 to 1 will be written over when the on-chip debug function is in use and thus it will become unstable after the setting. However, be sure to set the default values (0, 1, and 0) to bits 3 to 1 at setting.

Remarks 1. The values written in red in the above figure are specified in this sample program.

2. In this sample program, the option byte is set by the source file (file name: “op.asm”). Therefore, the option byte does not have to be set by the linker option of the RA78K0R.

The values specified for the option byte, above, are as follows in the program.

```
XOPTB  CSEG   OPT_BYTE
       DB     01101110B
       DB     11111111B
       DB     11111111B
       DB     10000100B
```

To use C language, prepare an assembly language source file (file name: “*.asm (*: arbitrary)”) such as the one shown below, specify it as the project source file, and build it with other source files (main.c).

```
XOPTB  CSEG   OPT_BYTE
       DB     01101110B
       DB     11111111B
       DB     11111111B
       DB     10000100B
END
```

[Column] What are CSEG (Code Segment), DSEG (Data Segment), and BSEG (Bit Segment)?

CSEG, DSEG, and BSEG are pseudo instructions which indicate where generated codes of instructions, data, or the like are to be allocated. Instructions and data which are described after such pseudo instructions have been issued are allocated in the ROM area with a CSEG pseudo instruction, in the RAM area with a DSEG pseudo instruction, and in the saddr area in RAM with a BSEG pseudo instruction.

For example, to allocate the option byte setting content to addresses starting from 000C0H in the internal ROM (flash memory), first, the CSEG pseudo instruction and `OPT_BYTE` attribute are used. Next, the DB pseudo instruction is used to define values that are to be set to addresses following 000C0H, which are then described in the program coded in assembly language.

The DB and DW pseudo instructions can be used only in a ROM area specified with the CSEG pseudo instruction. Descriptions of the DB or DW pseudo instructions in a RAM area specified with the DSEG or BSEG pseudo instruction will not cause errors, but must not be used. In this case, an object is generated and debug operation can be performed, since with MINICUBE2 (on-chip debug emulator) or SM+ (system simulator), coded instructions and data are expanded to the RAM area. With an actual device, however, operation is disabled since these cannot be expanded to the RAM area.

For details of the CSEG, DSEG, and BSEG pseudo instructions, refer to the **RA78K0R Language User's Manual**.

4.2 Setting Up Vector Table

In the vector table area, the program start address, which is used when branching occurs due to the generation of resets and various interrupt requests, is stored. In this sample program, interrupts are not serviced, so only the reset vector which is used during reset start is set.

This setting is required when coding in assembly language. When coding in C language, this setting is not required.

[Setting example] Setting up only the reset vector to be used when starting a reset (same as in the sample program settings)

Address Function name

```
XVECT1        CSEG   AT     00000H
<1>  DW       RESET_START          ;00000H RESET input, POC, LVI, WDT, TRAP
XVECT2        CSEG   AT     00004H
       DW     IINIT                ;00004H INTWDTI
       DW     IINIT                ;00006H INTLVI
       DW     IINIT                ;00008H INTP0
       DW     IINIT                ;0000AH INTP1
<2>
••• (Omitted) •••
       DW     IINIT                ;0005AH INTTM12
       DW     IINIT                ;0005CH INTTM13
       DW     IINIT                ;0005EH INTMD

••• (Omitted) •••
;*******************************************************************************
;
;      Servicing interrupts by using unnecessary interrupt sources
;
;*******************************************************************************
<3>  XMAIN  CSEG   UNIT
IINIT:
;      If an unnecessary interrupt occurred, the processing branches to this line.
;      The processing then returns to the initial original processing because no processing is performed here.

       RETI
```

Immediately after the reset ends, the program starts from the address (`RESET_START` at <1>, above) specified using the reset vector.

In this sample program, vector table addresses except 00000H are not used. `IINIT` is specified for all remaining vector table addresses (<2> above). If these settings are specified, even if an interrupt occurs, the processing branches to `IINIT` (<3> above), and then returns from the interrupt without performing processing, assuming the interrupt to be unnecessary.

[Column] What are #pragma directives?

#pragma directives are preprocessing instructions which are used in the C language and are coded at the beginning of source programs.

The following are major #pragma directives.

- #pragma sfr: Operations related to the SFR area can be specified at the C source level.
- #pragma ei: The EI instruction can be specified at the C source level.
- #pragma di: The DI instruction can be specified at the C source level.
- #pragma nop: The NOP instruction can be specified at the C source level. (The clock can be advanced without operating the CPU.)
- #pragma interrupt: Interrupt functions can be specified at the C source level.

For details about the #pragma directives, refer to the chapter regarding expansion functions, in the **CC78K0R Language User's Manual**.

4.3 Setting Up Stack Pointer

A stack area is a memory area in which data, such as of program counters, register values, and PSW (program status word) is temporarily stored. A stack area can be specified only in the internal RAM. The start address of this stack area is specified using a stack pointer to allocate the stack area.

A stack area is used when the following instructions are executed or interrupts occur.

- PUSH, CALL, CALLT, CALLF interrupt: Allocating data to a stack area
- POP, RET, RETI: Restoring data from a stack area

A stack area must be allocated when coding in assembly language. When coding in C language, this setting is not required, because a stack area is automatically allocated in the startup routine.

[Example] Using the first 32 bytes in the internal RAM as the stack area (same as in the sample program settings)

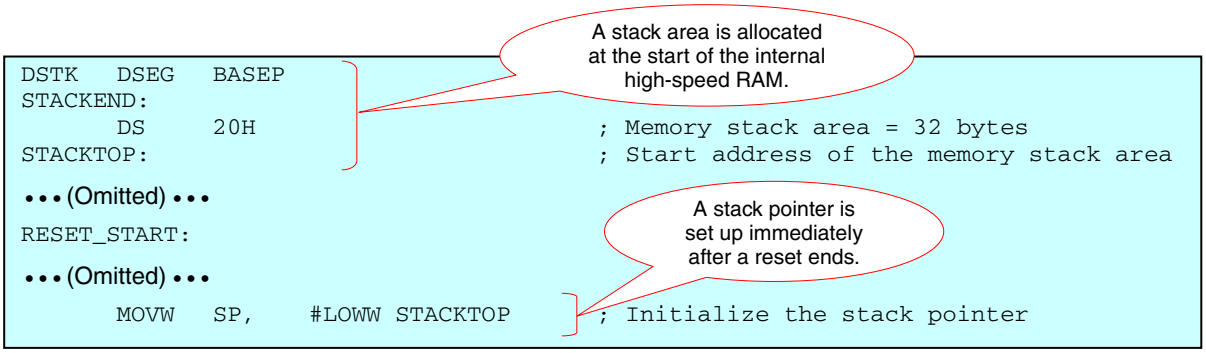

By writing the above code, the first 32 bytes in the internal RAM can be allocated as the stack area.

The start address in the internal RAM varies depending on the device. The stack is allocated to the area of the following addresses:

μPD78F1500, μPD78F1503, μPD78F1506: FEF00H to FEF1FH
μPD78F1501, μPD78F1504, μPD78F1507: FE700H to FE71FH
μPD78F1502, μPD78F1505, μPD78F1508: FE300H to FE31FH

In this sample program, the start of the internal RAM is specified without writing an absolute address by using the DSEG pseudo instruction BASEP[Note].

Note For details, refer to the **RA78K0R Language User's Manual**.

4.4 Setting Up and Controlling Watchdog Timer

The watchdog timer is set up using the option byte. For details, see **4.1 Setting Up Option Byte**.

When using the watchdog timer (when WDTON is 1), the watchdog timer is controlled using the watchdog timer enable register (WDTE). The watchdog timer counter is cleared and then starts counting again when ACH is written to WDTE. WDTE is set to 9AH[Note] by generating a reset signal.

Note The WDTE reset value varies depending on the value specified for WDTON of the option byte (000C0H).

WDTON Setting	WDTE Reset Value
0 (Watchdog timer count operation disabled)	1AH
1 (Watchdog timer count operation enabled)	9AH

Cautions 1. If a value other than ACH is written to WDTE, an internal reset signal is generated.

2. If a 1-bit memory manipulation instruction is executed for WDTE, an internal reset signal is generated.

3. The value read from WDTE is 9AH/1AH (this differs from the written value (ACH)).

[Column] Binary-value description

To describe a binary value, append “B” or “Y” after the binary value in assembly language, or append “0b” or “0B” before the binary value in C language.

4.5 Setting Up Clock

The CPU and the clock signal supplied to the peripheral hardware (f_{CLK}) are generated by dividing the frequency of the main system clock (f_{MAIN}).

(1) Selecting the clock operation mode

Select the clock operation mode by using the clock operation mode control register (CMC).

Figure 4-2-1. Format of Clock Operation Mode Control Register (CMC)

CMC

EXCLK	OSCSEL	0	OSCSELS	0	AMPHS1	AMPHS0	AMPH

AMPH	Control of high-speed system clock oscillation frequency
0	2 MHz ≤ f_{MX} ≤ 10 MHz
1	10 MHz < f_{MX} ≤ 20 MHz

AMPHS1	AMPHS0	XT1 oscillator oscillation mode selection
0	0	Low power consumption oscillation (default)
0	1	Normal oscillation
1	0	Ultra-low power consumption oscillation
1	1	

OSCSELS	Subsystem clock pin operation mode	XT1/P123 pin	XT2/P124 pin
0	Input port mode	Input port	
1	XT1 oscillation mode	Crystal resonator connection	

EXCLK	OSCSEL	High-speed system clock pin operation mode	X1/P121 pin	X2/EXCLK/P122 pin
0	**0**	Input port mode	Input port	
0	1	X1 oscillation mode	Crystal/ceramic resonator connection	
1	0	Input port mode	Input port	
1	1	External clock input mode	Input port	External clock input

Cautions 1. CMC can be written only once after reset release, by an 8-bit memory manipulation instruction.

2. After reset release, set CMC before X1 or XT1 oscillation is started as set by the clock operation status control register (CSC).

3. Be sure to set AMPH to 1 if the X1 clock oscillation frequency exceeds 10 MHz.

4. To use CMC with its initial value (00H), be sure to set it to 00H after releasing reset in order to prevent malfunction when a program loop occurs.

5. The XT1 oscillator is designed as a low-gain circuit for achieving low power consumption. Note the following points when designing the XT1 oscillator.

- **The pins and circuit board include parasitic capacitance. Therefore, confirm that there are no problems by performing oscillation evaluation on the circuit board to be actually used.**
- **When low power consumption oscillation or ultra-low power consumption oscillation is selected, lower power consumption than when selecting normal oscillation can be achieved. However, in this case, the XT1 oscillation margin is reduced, so perform sufficient oscillation evaluation of the resonator to be used for XT1 oscillation before using the resonator.**
- **Keep the wiring length between the XT1 and XT2 pins and resonator as short as possible and parasitic capacitance and wire resistance as small as possible. This is particularly important when ultra-low power consumption oscillation (AMPHS1 = 1) is selected.**
- **Configure the circuit board by using material with little parasitic capacitance and wire resistance.**
- **Place a ground pattern that has the same potential as V_{SS} (if possible) around the XT1 oscillator.**
- **Do not cross the signal lines between the XT1 and XT2 pins and the resonator with other signal lines. Do not route the signal lines near a signal line through which a high fluctuating current flows.**
- **Moisture absorption by the circuit board and condensation on the board in a highly humid environment may cause the impedance between the XT1 and XT2 pins to drop and disable oscillation. When using the circuit board in such an environment, prevent the circuit board from absorbing moisture by taking measures such as coating the circuit board.**
- **Coat the surface of the circuit board by using material that does not generate capacitance or leakage between the XT1 and XT2 pins.**

6. Be sure to clear bits 5 and 3 to "0".

Remarks 1. The values written in red in the above figure are specified in this sample program.

2. f_{MX}: High-speed system clock frequency

(2) Controlling the operations of the high-speed system clock, internal high-speed oscillation clock, and subsystem clock

Control the high-speed system clock, internal high-speed oscillation clock, and subsystem clock by using the clock operation status control register (CSC).

Figure 4-2-2. Format of Clock Operation Status Control Register (CSC)

CSC

MSTOP	XTSTOP	0	0	0	0	0	HIOSTOP

HIOSTOP	Internal high-speed oscillation clock operation control
0	Internal high-speed oscillator operating
1	Internal high-speed oscillator stopped

XTSTOP	Subsystem clock operation control	
	XT1 oscillation mode	Input port mode
0	XT1 oscillator operating	–
1	XT1 oscillator stopped	

MSTOP	High-speed system clock operation control		
	X1 oscillation mode	External clock input mode	Input port mode
0	X1 oscillator operating	External clock from EXCLK pin is valid	–
1	X1 oscillator stopped	External clock from EXCLK pin is invalid	

Cautions 1. After reset release, set the clock operation mode control register (CMC) before starting X1 oscillation as set by MSTOP or XT1 oscillation as set by XTSTOP.

2. To start X1 oscillation as set by MSTOP, check the oscillation stabilization time of the X1 clock by using the oscillation stabilization time counter status register (OSTC).

3. Do not stop the clock selected for the CPU/peripheral hardware clock (f_{CLK}) with the OSC register.

4. The setting of the flags of the register to stop clock oscillation (invalidate the external clock input) and the condition before clock oscillation is to be stopped are as follows.

Clock	Condition Before Stopping Clock (Invalidating External Clock Input)	Setting of CSC Register Flags
X1 clock External main system clock	CPU and peripheral hardware clocks operate with a clock other than the high-speed system clock. • CLS = 0 and MCS = 0 • CLS = 1	MSTOP = 1
Subsystem clock	CPU and peripheral hardware clocks operate with a clock other than the subsystem clock. (CLS = 0)	XTSTOP = 1
Internal high-speed oscillation clock	CPU and peripheral hardware clocks operate with a clock other than the internal high-speed oscillator clock. • CLS = 0 and MCS = 1 • CLS = 1	HIOSTOP = 1

5. Be sure to clear bits 5 to 1 to "0".

(3) Controlling the booster of the flash memory for high-speed operation

Control the booster of the flash memory for high-speed operation by using the operation speed mode control register (OSMC).

Figure 4-2-3. Format of Operation Speed Mode Control Register (OSMC)

OSMC

RTCLPC	0	0	0	0	0	FLPC	FSEL

FLPC	FSEL	f_{CLK} frequency selection
0	**0**	Operates at a frequency of 10 MHz or less (default).
0	1	Operates at a frequency higher than 10 MHz.
1	0	Operates at a frequency of 1 MHz.
1	1	Setting prohibited

RTCLPC	Setting in subsystem clock HALT mode
0	Enables subsystem clock supply to peripheral functions[Note]
1	Stops subsystem clock supply to peripheral functions except real-time counter, clock output/buzzer output, and LCD controller/driver.

Note Refer to the chapter of standby function of the User's Manual for the peripheral functions whose operations are enabled.

Cautions 1. Write "1" to FSEL before the following two operations.

- **Changing the clock prior to dividing f_{CLK} to a clock other than f_{IH}.**
- **Operating the DMA controller.**

2. **The CPU waits when "1" is written to the FSEL flag. The wait time is 15 μs to 20 μs (target) when $f_{CLK} = f_{IH}$, and 30 μs to 40 μs (target) when $f_{CLK} = f_{IH}/2$. However, counting the oscillation stabilization time of f_X can continue even while the CPU is waiting.**
3. **To increase f_{CLK} to 10 MHz or higher, set FSEL to "1", then change f_{CLK} after two or more clocks have elapsed.**
4. **Confirm that the clock is operating at 10 MHz or less before setting FSEL = 0.**
5. **To shift to STOP mode while $V_{DD} \leq 2.7$ V, set FSEL = 0 after setting f_{CLK} to 10 MHz or less.**
6. **The HALT mode current when operating on the subsystem clock can be reduced by setting RTCLPC to 1. However, the clock cannot be supplied to peripheral functions except the real-time counter in the subsystem clock HALT mode. Set bit 7 (RTCEN) of PER0 to 1 and bits 0 to 6 of PER0 to 0 before setting the subsystem clock HALT mode.**
7. **Once FLPC has been set from 0 to 1, setting it back to 0 from 1 other than by reset is prohibited.**
8. **When setting FSEL to "1", do so while RMC = 00H. When setting FLPC to "1", do so while RMC = 5AH.**
9. **Be sure to clear bits 6 to 2 to "0".**

(4) Setting the CPU/peripheral hardware clock

Select the CPU/peripheral hardware clock and a division ratio by using the system clock control register (CKC).

Figure 4-2-4. Format of System Clock Control Register (CKC)

CKC

CLS	CSS	MCS	MCM0	SDIV	MDIV2	MDIV1	MDIV0

CSS	MCM0	SDIV	MDIV2	MDIV1	MDIV0	Selection of CPU/peripheral hardware clock (f_{CLK})
0	**0**	×	**0**	**0**	**0**	f_{IH}
		×	0	0	1	$f_{IH}/2$
		×	0	1	0	$f_{IH}/2^2$
		×	0	1	1	$f_{IH}/2^3$ Note 1
		×	1	0	0	$f_{IH}/2^4$ Note 1
		×	1	0	1	$f_{IH}/2^5$ Note 1
0	1	×	0	0	0	f_{MX}
		×	0	0	1	$f_{MX}/2$
		×	0	1	0	$f_{MX}/2^2$
		×	0	1	1	$f_{MX}/2^3$
		×	1	0	0	$f_{MX}/2^4$
		×	1	0	1	$f_{MX}/2^5$ Note 2
1 Note 3	× Note 3	0	×	×	×	f_{SUB}
		1	×	×	×	$f_{SUB}/2$
Other than above						Setting prohibited

MCS Note 4	Status of Main system clock (f_{MAIN})
0	Internal high-speed oscillation clock (f_{IH})
1	High-speed system clock (f_{MX})

CLS Note 4	Status of CPU/peripheral hardware clock (f_{CLK})
0	Main system clock (f_{MAIN})
1	Subsystem clock (f_{SUB})

Notes 1. Setting is prohibited when f_{IH} = 1 MHz.

2. Setting is prohibited when f_{MX} < 4 MHz.

3. Changing the value of the MCM0 bit is prohibited while CSS is set to 1.

4. Bits 7 and 5 are read-only.

Remarks 1. f_{IH}: Internal high-speed oscillation clock frequency
f_{MX}: High-speed system clock frequency
f_{SUB}: Subsystem clock frequency

2. ×: don't care

3. The values written in red in the above figure are specified in this sample program.

An example of writing the values specified in (1) to (4) in the program is shown below.

- Assembly language

```
MOV    CMC,   #00000000B
MOV    CSC,   #11000000B
MOV    OSMC,  #10000000B
MOV    CKC,   #00001000B
```

- C language

```
CMC    = 0b00000000;
CSC    = 0b11000000;
OSMC   = 0b10000000;
CKC    = 0b00001000;
```

4.6 Setting Up Ports

Caution The on-chip ports vary depending on the product, so the ports to set up also vary.

	78K0R/LG3	78K0R/LF3	78K0R/LH3
Port 0	P00 to P02	P00 to P02	P00 to P02
Port 1	P10 to P15	P10 to P16	P10 to P17
Port 2	P20 to P26	P20 to P27	P20 to P27
Port 3	P30 to P33	P30 to P34	P30 to P34
Port 4	P40, P41	P40, P41	P40, P41
Port 5	P50 to P57	P50 to P57	P50 to P57
Port 6	–	P60, P61	P60, P61
Port 7	–	–	P70 to P77
Port 8	–	P80 to P82	P80 to P87
Port 9	P90 to P92	P90 to P97	P90 to P97
Port 10	P100	P100	P100 to P102
Port 11	P110, P111	P110, P111	P110, P111
Port 12	P120 to P124	P120 to P124	P120 to P124
Port 13	P130	P130	P130
Port 14	P140 to P147	P140 to P147	P140 to P147
Port 15	P157	P150 to P152, P157	P150 to P152, P157

(1) Specifying ports as input or output ports

The PMxx registers are used to specify whether ports are used as input ports or output ports. Ports are specified as input ports immediately after a reset ends.

The PMxx format is described, taking the PM0 register as an example.

Figure 4-3-1. Format of Port Mode Register 0 (PM0)

PM0

1	1	1	1	1	PM02	PM01	PM00

PM0n (n = 0 to 2)	Selection of P0n (n = 0 to 2) pin I/O mode
0	Output mode (output buffer on)
1	Input mode (output buffer off)

Caution Be sure to set bits 7 to 3 to "1".

(2) Setting up the output latches of output ports

The Pxx registers are used to set up the output latches of output ports to high level or low level. The output latches of output ports are set to low-level output immediately after a reset ends.

The Pxx format is described, taking the P0 register as an example.

Figure 4-3-2. Format of Port Register 0 (P0)

P0

0	0	0	0	0	P02	P01	P00

P0n (n = 0 to 2)	Output data control (in output mode)	Input data read (in input mode)
0	Output 0.	Input low level.
1	Output 1.	Input high level.

Caution Be sure to clear bits 7 to 3 to "0".

(3) Specifying the connections of on-chip pull-up resistors to input ports

The PUxx registers are used to specify whether on-chip pull-up resistors are connected to input ports. On-chip pull-up resistors are not connected immediately after a reset ends.

The PUxx format is described, taking the PU0 register as an example.

Figure 4-3-3. Format of Pull-up Resistor Option Register 0 (PU0)

PU0

0	0	0	0	0	PU02	PU01	PU00

PU0n (n = 0 to 2)	Connection of P0n (n = 0 to 2) pin on-chip pull-up resistor
0	On-chip pull-up resistor is not connected.
1	On-chip pull-up resistor is connected.

Caution Be sure to clear bits 7 to 3 to "0".

[Example 1] P0 is set up as follows to use it for switch input:

- P00 and P01 are specified as input ports.
- An on-chip pull-up resistor is connected to P00 and P01.
  (Same as in the sample program settings)

PM0

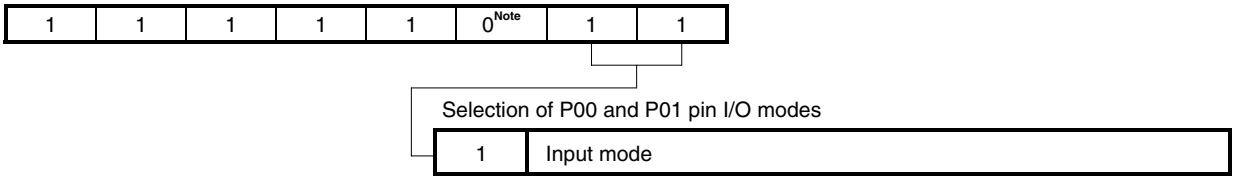

Note Unused pins are assumed to be output port pins.

PU0

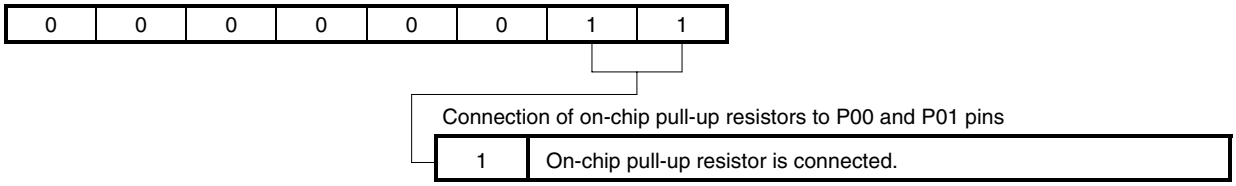

In this sample program, switch input signals (SW1 and SW2) are used as low-active signals. Therefore, a low-level signal (0) is input to the switch input ports (P00 and P01) when the switches are turned on and a high-level signal (1) is input when the switches are turned off.

The relationship between the switch input signals (SW1 and SW2) and switch input ports (P00 and P01) is as follows:

Switch Input		Switch Input Port	
SW1	SW2	P00	P01
On	On	0	0
Off	On	1	0
On	Off	0	1
Off	Off	1	1

These settings are specified in the program as follows:

[Assembly language]

```
MOV    P0,    #00000000B
MOV    PM0,   #11111111B
MOV    PU0,   #00000011B
```

[C language]

```
P0     = 0b00000000;
PM0    = 0b11111111;
PU0    = 0b00000011;
```

[Example 2] P3 is set up as follows to turn on the LEDs:

- P30, P31, and P32 are specified as output ports.
- The P30, P31, and P32 output latches are set to high-level output.
  (Same as in the sample program settings)

PM3

- 78K0R/LF3

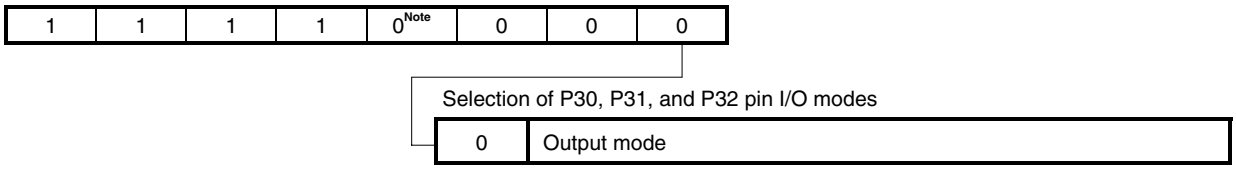

- 78K0R/LG3 and 78K0R/LH3

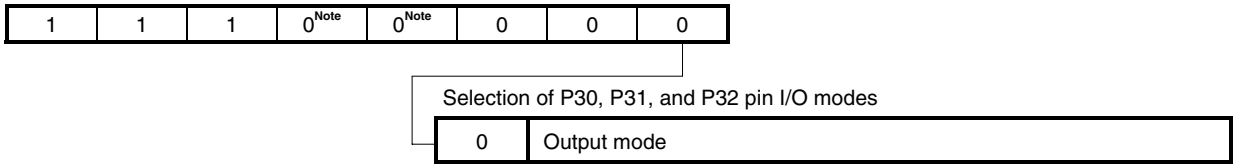

Note Unused pins are assumed to be output port pins.

P3

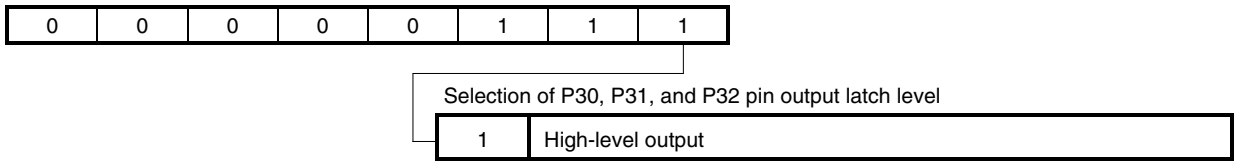

In this sample program, the signals used to turn on the LEDs (LED1, LED2, and LED3) are used as active-low signals. Therefore, the LEDs are turned on if 0 is output from the LED output ports (P30, P31, and P32) or turned off if 1 is output from the ports.

The relationship between the values of the LED output ports (P30, P31, and P32) and whether the LEDs are turned on (LED1, LED2, and LED3) is as follows:

LED Output Port			LED Status		
P30	P31	P32	LED1	LED2	LED3
0	1	1	On	Off	Off
1	0	1	Off	On	Off
1	1	0	Off	Off	On
1	1	1	Off	Off	Off

These settings are specified in the program as follows:

• 78K0R/LF3

[Assembly language]

```
MOV    P3,    #00000111B
MOV    PM3,   #11110000B
```

[C language]

```
P3     = 0b00000111;
PM3    = 0b11110000;
```

• 78K0R/LG3 and 78K0R/LH3

[Assembly language]

```
MOV    P3,    #00000111B
MOV    PM3,   #11100000B
```

[C language]

```
P3     = 0b00000111;
PM3    = 0b11100000;
```

4.7 Main Processing

The following operations are performed with the main processing in assembly language.

<1> Read data from P0.
<2> Among the read eight bits, clear the bits other than those for the switch input ports (P00 and P01) to 0.
<3> Read the data to output in accordance with the combination of the P00 and P01 input levels from addresses 01000H to 01003H (in the LEDDATA table).
<4> Output the read output data to P3.

By performing operations <1> and <2>, only the combination of the inputs of the switches (SW1 and SW2) connected to P00 and P01 can be determined. In this sample program, the signals from the switches are used as active-low signals. Therefore, a low-level signal (0) is input to P00 and P01 if the switches are turned on and a high-level signal (1) is input to P00 and P01 if the switches are turned off.

ROM area settings

```
XTBL1  CSEG   AT     01000H
LEDDATA:
       DB     00000011B     ;[01000H]Switch 1 turned on, switch 2 turned on: Turn on LED3
       DB     00000101B     ;[01001H]Switch 1 turned off, switch 2 turned on: Turn on LED2
       DB     00000110B     ;[01002H]Switch 1 turned on, switch 2 turned off: Turn on LED1
       DB     00000111B     ;[01003H]Switch 1 turned off, switch 2 turned off: Turn off
all LEDs
```

Address 01000H

Main processing

```
       MOVW   HL,    #LEDDATA      ; Specify the table address for turning on the LEDs
;*************************************************************************
;
;      Main loop
;
;*************************************************************************
MAIN_LOOP:
<1>    MOV    A,     P0            ; Read the switch input status
<2>    AND    A,     #00000011B    ; Mask bits other than those for the switches
       MOV    L,     A             ; Set the switch input status to the lower 8 bits
<3> of the table address
       MOV    A,     [HL]          ; Read the display data for LED
<4>    MOV    P3,    A             ; Control LED
       BR     $MAIN_LOOP           ; Go to the start of the m
```

Correspondence between SW1, SW2, and P0 (x = don't care)
(a) SW1 = ON, SW2 = ON: P0 = xxxxxx00
(b) SW1 = OFF, SW2 = ON: P0 = xxxxxx01
(c) SW1 = ON, SW2 = OFF: P0 = xxxxxx10
(d) SW1 = OFF, SW2 = OFF: P0 = xxxxxx11

The address of the A register after the operation is 00H ((a) above), 01H ((b) above), 02H ((c) above), or 03H ((d) above).

The output data (bits 2 to 0) is read from address 01000H, 01001H, 01002H, or 01003H

The relationship between the values of the LED output ports (P30, P31, and P32) and whether the LEDs are turned on (LED1, LED2, and LED3) is as follows:

LED Output Port			LED Status		
P30	P31	P32	LED1	LED2	LED3
0	1	1	On	Off	Off
1	0	1	Off	On	Off
1	1	0	Off	Off	On
1	1	1	Off	Off	Off

The main processing in C language operates similarly to that in assembly language.
In C language, the correspondence between the input data and output data is specified as an array.

```
/************************************************************************

       Main loop

************************************************************************/
void main(void)
{
    const unsigned char aLedOut[4]
     = {0b00000011,0b00000101,0b00000110,0b00000111}; /* Table for turning on the LEDs */
    unsigned char ucSwitchBuffer;                     /* Switch input data storage area */

    while(1){
        /* Acquire valid switch information */
        ucSwitchBuffer = ( P0 & 0b00000011 );

        /* Read the data to display from the table and display */
        P3 = ( aLedOut[ucSwitchBuffer] & 0b00000111 );
    }
}
```

Four units of data are defined in the brackets wherein output data is specified.

The correspondences between the input data and output data are as follows:

Switch Input	P00, P01	ucSwitchBuffer	aLedOut	LED Status
SW1 = ON, SW2 = ON	P00 = 0, P01 = 0	0b00000000	0b00000011	Turn on only LED3.
SW1 = OFF, SW2 = ON	P00 = 1, P01 = 0	0b00000001	0b00000101	Turn on only LED2.
SW1 = ON, SW2 = OFF	P00 = 0, P01 = 1	0b00000010	0b00000110	Turn on only LED1.
SW1 = OFF, SW2 = OFF	P00 = 1, P01 = 1	0b00000011	0b00000111	Turn off all LEDs.

CHAPTER 5 RELATED DOCUMENTS

Document Name		English
78K0R/Lx3 User's Manual		PDF
78K0R Microcontroller Instructions User's Manual		PDF
RA78K0R Assembler Package User's Manual	Language	PDF
	Operation	PDF
CC78K0R C Compiler User's Manual	Language	PDF
	Operation	PDF
PM+ Project Manager User's Manual		PDF

APPENDIX A PROGRAM LIST

As a program list example, the 78K0R/LH3 microcontroller source program is shown below.

● main.asm (assembly language version)

```
;*******************************************************************************
;
;    NEC Electronics    78K0R/LH3 Series
;
;*******************************************************************************
;    78K0R/LH3 Series    Sample Program (Initial Settings)
;*******************************************************************************
;    LED Lighting Switch Control
;*******************************************************************************
;<<History>>
;    2009.3.--    Release
;*******************************************************************************
;
;<<Overview>>
; This sample program initializes the microcontroller by specifying settings such as
; selecting the clock frequency and setting up I/O ports.  After the initialization,
; three LED lights are controlled by two switches in the main loop.
;
; <Primary initial settings>
;  (Option byte settings)
;  - Disabling the watchdog timer
;  - Setting the internal high-speed oscillator frequency to 8 MHz
;  - Disabling LVI from being started by default
;  - Enabling on-chip debug to operate
;  (Settings during initialization immediately after a reset ends)
;  - Setting up I/O ports
;  - Securing a supply voltage of 2.7 V or more by using the function of low-voltage detector
;  - Specifying that the CPU/peripheral hardware clock run on the internal high-speed
oscillation clock (8 MHz)
;  - Stopping the X1/XT1 oscillator
;
;
; <Switch input and LED status>
;
```

```
  ;  +-------------------------------------------------+
  ;  |Switch 1 |Switch 2 |   LED1   |   LED2   |   LED3   |
  ;  |   (P00)  |   (P01)  |   (P30)   |   (P31)   |   (P32)   |
  ;  |---------------------|---------------------------------|
  ;  |    OFF    |    OFF    |    OFF    |    OFF    |    OFF    |
  ;  |    ON     |    OFF    |    ON     |    OFF    |    OFF    |
  ;  |    OFF    |    ON     |    OFF    |    ON     |    OFF    |
  ;  |    ON     |    ON     |    OFF    |    OFF    |    ON     |
  ;  +-------------------------------------------------+
  ;  * 0 is input to the ports if the switches are turned on and 1 is input to the ports
if the switches are turned off.
  ;  * The LEDs are turned off if 1 is output from the ports or turned on if 0 is output
from the ports.
  ;
  ;
  ;<<I/O port settings>>
  ;  Input: P00, P01
  ;  Output: P30 to P32
  ;  * Set all unused ports that can be specified as output ports as output ports.
  ;
  ;*******************************************************************************


  ;===============================================================================
  ;
  ;    Vector table
  ;
  ;===============================================================================
  TVECT1      CSEG   AT     00000H
       DW     RESET_START         ; 00000H     RESET input, POC, LVI, WDT, TRAP
  TVECT2      CSEG   AT     00004H
       DW     IINIT               ; 00004H     INTWDTI
       DW     IINIT               ; 00006H     INTLVI
       DW     IINIT               ; 00008H     INTP0
       DW     IINIT               ; 0000AH     INTP1
       DW     IINIT               ; 0000CH     INTP2
       DW     IINIT               ; 0000EH     INTP3
       DW     IINIT               ; 00010H     INTP4
       DW     IINIT               ; 00012H     INTP5
```

```
DW      IINIT               ; 00014H      INTST3
DW      IINIT               ; 00016H      INTSR3
DW      IINIT               ; 00018H      INTSRE3
DW      IINIT               ; 0001AH      INTDMA0
DW      IINIT               ; 0001CH      INTDMA1
DW      IINIT               ; 0001EH      INTST0/INTCSI00
DW      IINIT               ; 00020H      INTSR0/INTCSI01
DW      IINIT               ; 00022H      INTSRE0
DW      IINIT               ; 00024H      INTST1/INTCSI10/INTIIC10
DW      IINIT               ; 00026H      INTSR1
DW      IINIT               ; 00028H      INTSRE1
DW      IINIT               ; 0002AH      INTIICA
DW      IINIT               ; 0002CH      INTTM00
DW      IINIT               ; 0002EH      INTTM01
DW      IINIT               ; 00030H      INTTM02
DW      IINIT               ; 00032H      INTTM03
DW      IINIT               ; 00034H      INTAD
DW      IINIT               ; 00036H      INTRTC
DW      IINIT               ; 00038H      INTRTCI
DW      IINIT               ; 0003AH      INTKR
DW      IINIT               ; 0003CH      INTST2/INTCSI20/INTIIC20
DW      IINIT               ; 0003EH      INTSR2
DW      IINIT               ; 00040H      INTSRE2
DW      IINIT               ; 00042H      INTTM04
DW      IINIT               ; 00044H      INTTM05
DW      IINIT               ; 00046H      INTTM06
DW      IINIT               ; 00048H      INTTM07
DW      IINIT               ; 0004AH      INTP6
DW      IINIT               ; 0004CH      INTP7
DW      IINIT               ; 0004EH      INTP8
DW      IINIT               ; 00050H      INTP9
DW      IINIT               ; 00052H      INTP10
DW      IINIT               ; 00054H      INTP11
DW      IINIT               ; 00056H      INTTM10
DW      IINIT               ; 00058H      INTTM11
DW      IINIT               ; 0005AH      INTTM12
DW      IINIT               ; 0005CH      INTTM13
DW      IINIT               ; 0005EH      INTMD
```

```
  ;=============================================================================
  ;
  ;    Define the ROM data table
  ;
  ;=============================================================================
  XTBL1CSEG   AT     01000H
  LEDDATA:
       DB     00000011B           ; [01000H]Switch 1 turned on, switch 2 turned on: Turn
on LED3
       DB     00000101B           ; [01001H]Switch 1 turned off, switch 2 turned on: Turn
on LED2
       DB     00000110B           ; [01002H]Switch 1 turned on, switch 2 turned off: Turn
on LED1
       DB     00000111B           ; [01003H]Switch 1 turned off, switch 2 turned off: Turn
off all LEDs

  ;=============================================================================
  ;
  ;    Define the memory stack area
  ;
  ;=============================================================================
  DSTK DSEG   BASEP
  STACKEND:
       DS     20H                 ; Memory stack area = 32 bytes
  STACKTOP:                       ; Start address of the memory stack area


  ;*****************************************************************************
  ;
  ;    Servicing interrupts by using unnecessary interrupt sources
  ;
  ;*****************************************************************************
  XMAINCSEG   UNIT
  IINIT:
  ;    If an unnecessary interrupt occurred, the processing branches to this line.
  ;    The processing then returns to the initial original processing because no processing
is performed here.

       RETI
```

```
;*******************************************************************************
;
;    Initialization after RESET
;
;*******************************************************************************
RESET_START:

;-------------------------------------------------------------------------------
;    Disable interrupts
;-------------------------------------------------------------------------------
     DI                         ; Disable interrupts

;-------------------------------------------------------------------------------
;    Set up the register bank
;-------------------------------------------------------------------------------
     SEL    RB0                 ; Set up the register bank

;-------------------------------------------------------------------------------
;    Initialize the stack pointer
;-------------------------------------------------------------------------------
     MOVW   SP,    #LOWW STACKTOP      ; Initialize the stack pointer

;-------------------------------------------------------------------------------
;    Specify the I/O port
;-------------------------------------------------------------------------------
     CALL   !!SINIPORT          ; Set all ports that can be specified as output ports as
output ports.

;-------------------------------------------------------------------------------
;    Low-voltage detection
;-------------------------------------------------------------------------------
     CALL   !!SINILVI           ; Securing a supply voltage of 2.7 V or more

;-------------------------------------------------------------------------------
;    Specify the clock frequency
;-------------------------------------------------------------------------------
     CALL   !!SINICLK           ; Operating internal high-speed oscillation clock at 8
MHz
```

```
;-------------------------------------------------------------------------------
;    Initialize the general-purpose register
;-------------------------------------------------------------------------------
     MOVW   HL,    #LEDDATA      ; Specify the table address for turning on the LEDs

;-------------------------------------------------------------------------------
;    Enable interrupts
;    (To use interrupts, enable interrupts here.)
;-------------------------------------------------------------------------------
;    EI                          ; To enable interrupts,
                                 ; Delete ";" before EI.

     BR     MAIN_LOOP            ; Go to the main loop

;*******************************************************************************
;
;    I/O port setting
;
;*******************************************************************************
SINIPORT:
;-------------------------------------------------------------------------------
;    Specify the digital I/O
;-------------------------------------------------------------------------------
     MOV    ADPC,  #00010000B    ; A/D port configuration register
                   ;|||+++++------- ADPC4 to ADPC0
                   ;|||            [Analog input (A)/digital I/O (D) switching]
                   ;|||                  +------------- ANI15/P157
                   ;|||                  |+++----------- ANI10 to ANI8/P152 to P150
                   ;|||                  ||||+++++++++-- ANI7 to ANI0/P27 to P20
                   ;|||              00000: AAAAAAAAAAAA
                   ;|||              00001: AAAAAAAAAAAD
                   ;|||              00010: AAAAAAAAAADD
                   ;|||              00011: AAAAAAAAADDD
                   ;|||              00100: AAAAAAAADDDD
                   ;|||              00101: AAAAAAADDDDD
                   ;|||              00110: AAAAAADDDDDD
                   ;|||              00111: AAAAADDDDDDD
                   ;|||              01000: AAAADDDDDDDD
```

```
                ;|||            01001: AAADDDDDDDDD
                ;|||            01010: AADDDDDDDDDD
                ;|||            01011: ADDDDDDDDDDD
                ;|||            10000: DDDDDDDDDDDD
                ;+++------------ Be sure to set 0

;---------------------------------------------------------------------------
;    Initialize port 0
;---------------------------------------------------------------------------
     MOV    P0,    #00000000B   ; Set the P00 to P02 output latches to low level
     MOV    PM0,   #11111011B   ; Specify P00 and P01 as input ports
                                ; Specify P02 as an output port
     MOV    PU0,   #00000011B   ; Connect on-chip pull-up resistors to P00 and P01
                                ; Connect an on-chip pull-up resistor to P02
                                ; P00: Use for switch 1 input
                                ; P01: Use for switch 2 input
                                ; P02: Unused

;---------------------------------------------------------------------------
;    Initialize port 1
;---------------------------------------------------------------------------
     MOV    P1,    #00000000B   ; Set the P10 to P17 output latches to low level
     MOV    PM1,   #00000000B   ; Specify P10 to P17 as output ports
                                ; P10 to P17: Unused

;---------------------------------------------------------------------------
;    Initialize port 2
;---------------------------------------------------------------------------
     MOV    P2,    #00000000B   ; Set the P20 to P27 output latches to low level
     MOV    PM2,   #00000000B   ; Specify P20 to P27 as output ports
                                ; P20 to P27: Unused

;---------------------------------------------------------------------------
;    Initialize port 3
;---------------------------------------------------------------------------
     MOV    P3,    #00000111B   ; Set the P30 to P32 output latches to high level
                                ; Set the P33 and P34 output latches to low level
     MOV    PM3,   #11100000B   ; Specify P30 to P34 as output ports
                                ; P30: Use for turning on LED1
```

```
                                ; P31: Use for turning on LED2
                                ; P32: Use for turning on LED3
                                ; P33 and P34: Unused

;---------------------------------------------------------------------------
;    Initialize port 4
;---------------------------------------------------------------------------
     MOV    P4,    #00000000B   ; Set the P40 and P41 output latches to low level
     MOV    PM4,   #11111100B   ; Specify P40 and P41 as output ports
                                ; P40 and P41: Unused

;---------------------------------------------------------------------------
;    Initialize port 5
;---------------------------------------------------------------------------
     MOV    P5,    #00000000B   ; Set the P50 to P57 output latches to low level
     MOV    PM5,   #00000000B   ; Specify P50 to P57 as output ports
                                ; P50 to P57: Unused

;---------------------------------------------------------------------------
;    Initialize port 6
;---------------------------------------------------------------------------
     MOV    P6,    #00000000B   ; Set the P60 and P61 output latches to low level
     MOV    PM6,   #11111100B   ; Specify P60 and P61 as output ports
                                ; P60 and P61: Unused

;---------------------------------------------------------------------------
;    Initialize port 7
;---------------------------------------------------------------------------
     MOV    P7,    #00000000B   ; Set the P70 to P77 output latches to low level
     MOV    PM7,   #00000000B   ; Specify P70 to P77 as output ports
                                ; P70 to P77: Unused

;---------------------------------------------------------------------------
;    Initialize port 8
;---------------------------------------------------------------------------
     MOV    P8,    #00000000B   ; Set the P80 to P87 output latches to low level
     MOV    PM8,   #00000000B   ; Specify P80 to P87 as output ports
                                ; P80 to P87: Unused
```

```
;-------------------------------------------------------------------------------
;    Initialize port 9
;-------------------------------------------------------------------------------
     MOV    P9,    #00000000B    ; Set the P90 to P97 output latches to low level
     MOV    PM9,   #00000000B    ; Specify P90 to P97 as output ports
                                 ; P90 to P97: Unused

;-------------------------------------------------------------------------------
;    Initialize port 10
;-------------------------------------------------------------------------------
     MOV    P10,   #00000000B    ; Set the P100 to P102 output latches to low level
     MOV    PM10,  #11111000B    ; Specify P100 to P102 as output ports
                                 ; P100 to P102: Unused

;-------------------------------------------------------------------------------
;    Initialize port 11
;-------------------------------------------------------------------------------
     MOV    P11,   #00000000B    ; Set the P110 and P111 output latches to low level
     MOV    PM11,  #11111100B    ; Specify P110 and P111 as output ports
                                 ; P110 and P111: Unused

;-------------------------------------------------------------------------------
;    Initialize port 12
;-------------------------------------------------------------------------------
     MOV    P12,   #00000000B    ; Set the P120 output latch to low level
     MOV    PM12,  #11111110B    ; Specify P120 as an output port
                                 ; P120 to P124: Unused
                                 ; * P121 to P124 are input-only ports.

;-------------------------------------------------------------------------------
;    Initialize port 14
;-------------------------------------------------------------------------------
     MOV    P14,   #00000000B    ; Set the P140 to P147 output latches to low level
     MOV    PM14,  #00000000B    ; Specify P140 to P147 as output ports
                                 ; P140 to P147: Unused

;-------------------------------------------------------------------------------
;    Initialize port 15
;-------------------------------------------------------------------------------
```

```
      MOV    P15,   #00000000B    ; Set the P150 to P152, and P157 output latches to low
level
      MOV    PM15,  #01111000B    ; Specify P150 to P152, P157 as output ports
                                  ; P150 to P152, and P157: Unused
      RET

  ;*************************************************************************
  ;
  ;    Low-voltage detection
  ;
  ;-------------------------------------------------------------------------
  ;    Secure a supply voltage of 2.7 V or more by using the function of low-voltage detector.
  ;*************************************************************************
  SINILVI:
       ; Set up the low-voltage detector
       SET1   LVIMK                ; Disable the INTLVI interrupt
       CLR1   LVISEL               ; Specify VDD as the detection voltage
       MOV    LVIS,  #00001001B    ; Low-voltage detection level select register
                      ;||||++++------- LVIS3 to LVIS0
                      ;||||           [Detection level]
                      ;||||             0000: VLVI0 (4.22 ±0.1 V)
                      ;||||             0001: VLVI1 (4.07 ±0.1 V)
                      ;||||             0010: VLVI2 (3.92 ±0.1 V)
                      ;||||             0011: VLVI3 (3.76 ±0.1 V)
                      ;||||             0100: VLVI4 (3.61 ±0.1 V)
                      ;||||             0101: VLVI5 (3.45 ±0.1 V)
                      ;||||             0110: VLVI6 (3.30 ±0.1 V)
                      ;||||             0111: VLVI7 (3.15 ±0.1 V)
                      ;||||             1000: VLVI8 (2.99 ±0.1 V)
                      ;||||             1001: VLVI9 (2.84 ±0.1 V)
                      ;||||             1010: VLVI10 (2.68 ±0.1 V)
                      ;||||             1011: VLVI11 (2.53 ±0.1 V)
                      ;||||             1100: VLVI12 (2.38 ±0.1 V)
                      ;||||             1101: VLVI13 (2.22 ±0.1 V)
                      ;||||             1110: VLVI14 (2.07 ±0.1 V)
                      ;||||             1111: VLVI15 (1.91 ±0.1 V)
                      ;++++------------ Be sure to set 0
       CLR1   LVIMD                ; Specify that an interrupt signal is generated when a
low voltage is detected
```

```
      SET1   LVION              ; Enable low-voltage detection

      ; Make the system wait until the low-voltage detector stabilizes (10 us or more)
      MOV    B,     #10         ; Specify the number of counts
 HRES100:
      NOP                       ;                   (1 clk)
      DEC    B                  ;                   (1 clk)
      BNZ    $HRES100           ; Has the wait period ended? No, (2 clk/4 clk)

      ; Make the system wait until VLVI is less than or equal to VDD
 HRES300:
      NOP
      BT     LVIF,  $HRES300    ;VDD < VLVI? Yes,
      CLR1   LVION              ; Stop the low-voltage detector

      RET

 ;*****************************************************************************
 ;
 ;    Specify the clock frequency
 ;
 ;-----------------------------------------------------------------------------
 ;    Specify the clock frequency so that the device can run on the internal high-speed
oscillation clock.
 ;*****************************************************************************
 SINICLK:
      MOV    CMC,   #00000000B   ; Clock operation mode
                    ;|||||||+------- AMPH
                    ;|||||||       [Control  of  high-speed  system  clock  oscillation
frequency]
                    ;|||||||         0: 2 MHz ≤ fMX < 10 MHz
                    ;|||||||         1: 10 MHz < fMX ≤ 20 MHz
                    ;|||||++-------- AMPHS1, AMPHS0
                    ;|||||          [XT1 oscillator oscillation mode selection]
                    ;|||||           00: Low power consumption oscillation (default)
                    ;|||||           01: Normal oscillation
                    ;|||||           10: Ultra-low power consumption oscillation
                    ;|||||           11: Ultra-low power consumption oscillation
                    ;||||+---------- Be sure to set 0.
```

```
                ;|||+----------- OSCSELS
                ;|||           [Subsystem clock pin operation mode]
                ;|||             0: Input port mode
                ;|||             1: XT1 oscillation mode
                ;||+------------ Be sure to set 0
                ;++------------- EXCLK/OSCSEL
                ;              [High-speed system clock pin operation mode]
                ;                0: Input port mode
                ;                01: X1 oscillation mode
                ;                10: Input port mode
                ;                11: External clock input mode

      MOV   CSC,  #11000000B   ; Clock operation status control
                ;|||||||+------- HIOSTOP
                ;|||||||       [Internal  high-speed  oscillation  clock  operation
control]
                ;|||||||         0: Internal high-speed oscillator operating
                ;|||||||         1: Internal high-speed oscillator stopped
                ;||++++--------- Be sure to set 0
                ;|+-------------- XTSTOP
                ;|              [Subsystem clock operation control]
                ;|                0: XT1 oscillator operating
                ;|                1: XT1 oscillator stopped
                ;+--------------- MSTOP
                ;              [High-speed system clock operation control]
                ;                0: X1 oscillator operating
                ;                1: X1 oscillator stopped

      MOV   OSMC, #10000000B   ; Operation speed mode
                ;||||||++------- FSEL/FLPC
                ;||||||               [fCLK frequency selection]
                ;||||||                 00: Operates at a frequency of 10 MHz or less
(default)
                ;||||||                 01: Operates at a frequency higher than 10 MHz
                ;||||||                 10: Operates at a frequency of 1 MHz
                ;||||||                 11: Setting prohibited
                ;|+++++--------- Be sure to set 0
                ;+--------------- RTCLPC
                ;              [Setting in subsystem clock HALT mode]
```

```
                    ;               0: Enables subsystem clock supply to peripheral
functions
                    ;               1: Stops subsystem clock supply to peripheral functions
                    ;                  except real-time counter

      MOV    CKC,   #00001000B    ; Clock selection
                    ;|+|++++------- CSS/MCM0/MDIV2 to MDIV0
                    ;| |           [Selection of CPU/peripheral hardware clock (fCLK)]
                    ;| |             00x000: fIH
                    ;| |             00x001: fIH/2 (default)
                    ;| |             00x010: fIH/2^2
                    ;| |             00x011: fIH/2^3
                    ;| |             00x100: fIH/2^4
                    ;| |             00x101: fIH/2^5
                    ;| |             01x000: fMX
                    ;| |             01x001: fMX/2
                    ;| |             01x010: fMX/2^2
                    ;| |             01x011: fMX/2^3
                    ;| |             01x100: fMX/2^4
                    ;| |             01x101: fMX/2^5
                    ;| |             1x0xxx: fSUB
                    ;| |             1x1xxx: fSUB/2
                    ;| |             ( x : don't care )
                    ;| +------------ MCS <Read Only>
                    ;|              [Status of Main system clock (fMAIN)]
                    ;|               0: Internal high-speed oscillation clock (fIH)
                    ;|               1: High-speed system clock (fMX)
                    ;+-------------- CLS <Read Only>
                    ;               [Status of CPU/peripheral hardware clock (fCLK)]
                    ;                0: Main system clock (fMAIN)
                    ;                1: Subsystem clock (fSUB)

      RET

;*******************************************************************************
;
;    Main loop
;
;*******************************************************************************
```

```
  MAIN_LOOP:
        MOV    A,     P0            ; Read the switch input status
        AND    A,     #00000011B    ; Mask bits other than those for the switches
        MOV    L,     A             ; Set the switch input status to the lower 8 bits of the
table address
        MOV    A,     [HL]          ; Read the display data for LED
        MOV    P3,    A             ; Control LED
        BR     $MAIN_LOOP           ; Go to the start of the main loop
  end
```

● main.c (C language version)

```
/************************************************************************************

  NEC Electronics    78K0R/LH3 Series

************************************************************************************
  78K0R/LH3 Series Sample Program (Initial Settings)
************************************************************************************
  LED Lighting Switch Control
************************************************************************************
<<History>>
  2009.1.-- Release
************************************************************************************

<<Overview>>
This sample program initializes the microcontroller by specifying settings such as
selecting the clock frequency and setting up I/O ports.  After the initialization,
three LED lights are controlled by two switches in the main loop.

 <Primary initial settings>
 (Option byte settings)
;  - Disabling the watchdog timer
;  - Setting the internal high-speed oscillator frequency to 8 MHz
;  - Disabling LVI from being started by default
;  (Settings during initialization immediately after a reset ends)
;  - Setting up I/O ports
;  - Securing a supply voltage of 2.7 V or more by using the function of low-voltage detector
;  - Specifying that the CPU/peripheral hardware clock run on the internal high-speed
oscillation clock (8 MHz)
;  - Stopping the X1/XT1 oscillator


 <Switch input and LED status>

  +-------------------------------------------------+
  |Switch 1 |Switch 2 |   LED1   |   LED2   |   LED3   |
  |   (P00)  |   (P01)  |   (P30)   |   (P31)   |   (P32)   |
  |-------------------|---------------------------------|
  |    OFF    |    OFF    |    OFF    |    OFF    |    OFF    |
  |    ON     |    OFF    |    ON     |    OFF    |    OFF    |
```

```
   |   OFF   |   ON    |   OFF   |   ON    |   OFF   |
   |   ON    |   ON    |   OFF   |   OFF   |   ON    |
   +-----------------------------------------------+
```

* 0 is input to the ports if the switches are turned on and 1 is input to the ports if the switches are turned off.

* The LEDs are turned off if 1 is output from the ports or turned on if 0 is output from the ports.

```
  <I/O port settings>
   Input: P00, P01
   Output: P30 to P32
   * Set all unused ports that can be specified as output ports as output ports.

 ************************************************************************/


 /*=======================================================================

   Preprocessing directive (#pragma)

 =======================================================================*/
 #pragma  SFR              /* SFR names can be described at the C source level   */
 #pragma  DI               /* DI instructions can be described at the C source level */
 #pragma  EI               /* EI instructions can be described at the C source level */
 #pragma  NOP              /* NOP instructions can be described at the C source level */

 /*=======================================================================

   Function prototype declaration

 =======================================================================*/
 void fn_InitPort( void );    /* I/O port setting */
 void fn_InitLvi( void );     /* Low voltage detection */
 void fn_InitClock( void );   /* Clock frequency setting */


 /************************************************************************
```

```
    Initialization after RESET

  ************************************************************************/
  void hdwinit( void )
  {
  /*-----------------------------------------------------------------------
    Disable interrupts
  -----------------------------------------------------------------------*/
    DI();               /* Disable interrupts */

  /*-----------------------------------------------------------------------
    Specify the I/O port
  -----------------------------------------------------------------------*/
    fn_InitPort();          /* Set all ports that can be specified as output ports as output
ports */

  /*-----------------------------------------------------------------------
    Low-voltage detection
  -----------------------------------------------------------------------*/
    fn_InitLvi();       /* Securing a supply voltage of 2.7 V or more */

  /*-----------------------------------------------------------------------
    Specify the clock frequency
  -----------------------------------------------------------------------*/
    fn_InitClock();         /* Operating internal high-speed oscillation clock at 8 MHz */

  /*-----------------------------------------------------------------------
    Enable interrupts
    (To use interrupts, enable interrupts here.)
  -----------------------------------------------------------------------*/
  /*   EI();  */           /* To enable interrupts,      */
                                /* uncomment this line.*/

  }

  /************************************************************************

    I/O port setting
```

```
************************************************************************/
void fn_InitPort( void )
{
/*-----------------------------------------------------------------------
  Specify the digital I/O
-----------------------------------------------------------------------*/
  ADPC   = 0b00010000; /* A/D port configuration register */
         /* |||+++++++--- ADPC4 to ADPC0 */
         /* |||        [Analog input (A)/digital I/O (D) switching] */
         /* |||              +------------- ANI15/P157 */
         /* |||              |+++----------- ANI10 to ANI8/P152 to P150 */
         /* |||              ||||+++++++++-- ANI7 to ANI0/P27 to P20 */
         /* |||          00000: AAAAAAAAAAAA */
         /* |||          00001: AAAAAAAAAAAD */
         /* |||          00010: AAAAAAAAAADD */
         /* |||          00011: AAAAAAAAADDD */
         /* |||          00100: AAAAAAAADDDD */
         /* |||          00101: AAAAAAADDDDD */
         /* |||          00110: AAAAAADDDDDD */
         /* |||          00111: AAAAADDDDDDD */
         /* |||          01000: AAAADDDDDDDD */
         /* |||          01001: AAADDDDDDDDD */
         /* |||          01010: AADDDDDDDDDD */
         /* |||          01011: ADDDDDDDDDDD */
         /* |||          10000: DDDDDDDDDDDD */
         /*  +++--------- Be sure to set 0 */

/*-----------------------------------------------------------------------
  Initialize port 0
-----------------------------------------------------------------------*/
  P0     = 0b00000000; /* Set the P00 to P02 output latches to low level */
  PM0    = 0b11111011; /* Specify P00 and P01 as input ports */
                       /* Specify P02 as an output port */
  PU0    = 0b00000011; /* Connect on-chip pull-up resistors to P00 and P01 */
                       /* Connect on-chip pull-up resistor to P02 */
                       /* P00: Use for switch 1 input */
                       /* P01: Use for switch 2 input */
                       /* P02: Unused */
```

```
/*-------------------------------------------------------------------------
  Initialize port 1
-------------------------------------------------------------------------*/
  P1     = 0b00000000; /* Set the P10 to P17 output latches to low level */
  PM1    = 0b00000000; /* Specify P10 to P17 as output ports */
                       /* P10 to P17: Unused */

/*-------------------------------------------------------------------------
  Initialize port 2
-------------------------------------------------------------------------*/
  P2     = 0b00000000; /* Set the P20 to P27 output latches to low level */
  PM2    = 0b00000000; /* Specify P20 to P27 as output ports */
                       /* P20 to P27: Unused */

/*-------------------------------------------------------------------------
  Initialize port 3
-------------------------------------------------------------------------*/
  P3     = 0b00000111; /* Set the P30 to P32 output latches to high level */
                       /* Set the P33 and P34 output latches to low level */
  PM3    = 0b11100000; /* Specify P30 to P34 as output ports */
                       /* P30: Use for turning on LED1 */
                       /* P31: Use for turning on LED2 */
                       /* P32: Use for turning on LED3 */
                       /* P33 and P34: Unused */

/*-------------------------------------------------------------------------
  Initialize port 4
-------------------------------------------------------------------------*/
  P4     = 0b00000000; /* Set the P40 and P41 output latches to low level */
  PM4    = 0b11111100; /* Specify P40 and P41 as output ports */
                       /* P40 and P41: Unused */

/*-------------------------------------------------------------------------
  Initialize port 5
-------------------------------------------------------------------------*/
  P5     = 0b00000000; /* Set the P50 to P57 output latches to low level */
  PM5    = 0b00000000; /* Specify P50 to P57 as output ports */
                       /* P50 to P57: Unused */
```

```
/*-------------------------------------------------------------------------
  Initialize port 6
-------------------------------------------------------------------------*/
  P6     = 0b00000000; /* Set the P60 and P61 output latches to low level */
  PM6    = 0b11111100; /* Specify P60 and P61 as output ports */
                       /* P60 and P61: Unused */

/*-------------------------------------------------------------------------
  Initialize port 7
-------------------------------------------------------------------------*/
  P7     = 0b00000000; /* Set the P70 to P77 output latches to low level */
  PM7    = 0b00000000; /* Specify P70 to P77 as output ports */
                       /* P70 to P77: Unused */

/*-------------------------------------------------------------------------
  Initialize port 8
-------------------------------------------------------------------------*/
  P8     = 0b00000000; /* Set the P80 to P87 output latches to low level */
  PM8    = 0b00000000; /* Specify P80 to P87 as output ports */
                       /* P80 to P87: Unused */

/*-------------------------------------------------------------------------
  Initialize port 9
-------------------------------------------------------------------------*/
  P9     = 0b00000000; /* Set the P90 to P97 output latches to low level */
  PM9    = 0b00000000; /* Specify P90 to P97 as output ports */
                       /* P90 to P97: Unused */

/*-------------------------------------------------------------------------
  Initialize port 10
-------------------------------------------------------------------------*/
  P10    = 0b00000000; /* Set the P100 to P102 output latches to low level */
  PM10   = 0b11111000; /* Specify P100 to P102 as output ports */
                       /* P100 to P102: Unused */

/*-------------------------------------------------------------------------
  Initialize port 11
-------------------------------------------------------------------------*/
  P11    = 0b00000000; /* Set the P110 and P111 output latches to low level */
```

```
  PM11   = 0b11111100; /* Specify P110 and P111 as output ports */
                       /* P110 and P111: Unused */

/*-----------------------------------------------------------------------------
  Initialize port 12
-----------------------------------------------------------------------------*/
  P12    = 0b00000000; /* Set the P120 output latch to low level */
  PM12   = 0b11111110; /* Specify P120 as output port */
                       /* P120 to P124: Unused */
                       /* * P121 to P124 are input-only ports */

/*-----------------------------------------------------------------------------
  Initialize port 14
-----------------------------------------------------------------------------*/
  P14    = 0b00000000; /* Set the P140 to P147 output latches to low level */
  PM14   = 0b00000000; /* Specify P140 to P147 as output ports */
                       /* P140 to P147: Unused */

/*-----------------------------------------------------------------------------
  Initialize port 15
-----------------------------------------------------------------------------*/
  P15    = 0b00000000; /* Set the P150 to P152, and P157 output latches to low level */
  PM15   = 0b01111000; /* Specify P150 to P152, and P157 as output ports */
                       /* P150 to P152, and P157: Unused */
}

/*****************************************************************************

  Low-voltage detection

-----------------------------------------------------------------------------
  Secure a supply voltage of 2.7 V or more by using the function of low-voltage detector.
*****************************************************************************/
void fn_InitLvi( void )
{
  unsigned char ucCounter;   /* Count variable */

  /* Set up the low-voltage detector */
  LVIMK  = 1;          /* Disable the INTLVI interrupt */
```

```
    LVISEL = 0;          /* Specify VDD as the detection voltage */
    LVIS   = 0b00001001; /* Low-voltage detection level select register */
           /* ||||++++--- LVIS3 to LVIS0 */
           /* ||||        [Detection level] */
           /* ||||         0000: VLVI0 (4.22 ±0.1 V) */
           /* ||||         0001: VLVI1 (4.07 ±0.1 V) */
           /* ||||         0010: VLVI2 (3.92 ±0.1 V) */
           /* ||||         0011: VLVI3 (3.76 ±0.1 V) */
           /* ||||         0100: VLVI4 (3.61 ±0.1 V) */
           /* ||||         0101: VLVI5 (3.45 ±0.1 V) */
           /* ||||         0110: VLVI6 (3.30 ±0.1 V) */
           /* ||||         0111: VLVI7 (3.15 ±0.1 V) */
           /* ||||         1000: VLVI8 (2.99 ±0.1 V) */
           /* ||||         1001: VLVI9 (2.84 ±0.1 V) */
           /* ||||         1010: VLVI10 (2.68 ±0.1 V) */
           /* ||||         1011: VLVI11 (2.53 ±0.1 V) */
           /* ||||         1100: VLVI12 (2.38 ±0.1 V) */
           /* ||||         1101: VLVI13 (2.22 ±0.1 V) */
           /* ||||         1110: VLVI14 (2.07 ±0.1 V) */
           /* ||||         1111: VLVI15 (1.91 ±0.1 V) */
           /* ++++-------- Be sure to set 0 */
    LVIMD  = 0;          /* Specify that an interrupt signal is generated when a low voltage
is detected */
    LVION  = 1;          /* Enable low-voltage detection */

    /* Make the system wait until the low-voltage detector stabilizes (10 us or more)*/
    for( ucCounter = 0; ucCounter < 4; ucCounter++ ){
       NOP();
    }

    /* Make the system wait until VLVI is less than or equal to VDD */
    while( LVIF ){
       NOP();
    }
    LVION  = 0;   /* Stop the low-voltage detector */
  }

  /************************************************************************
```

```
   Specify the clock frequency

  ------------------------------------------------------------------------------
   Specify the clock frequency so that the device can run on the internal high-speed oscillation
clock.
  ********************************************************************************/
  void fn_InitClock( void )
  {
    CMC    = 0b00000000; /* Clock operation mode */
           /* |||||||+--- AMPH */
           /* |||||||        [Control of high-speed system clock oscillation frequency] */
           /* |||||||          0: 2 MHz ( fMX < 10 MHz */
           /*  |||||||         1: 10 MHz < fMX ( 20 MHz */
           /*  |||||++---- AMPHS1, AMPHS0 */
           /*  |||||        [XT1 oscillator oscillation mode selection] */
           /*  |||||          00: Low power consumption oscillation (default) */
           /*  |||||          01: Normal oscillation */
           /*  |||||          10: Ultra-low power consumption oscillation */
           /*  |||||          11: Ultra-low power consumption oscillation */
           /*  ||||+------ Be sure to set 0 */
           /*  |||+------- OSCSELS */
           /*  |||              [Subsystem clock pin operation mode] */
           /*  |||               0: Input port mode */
           /*  |||               1: XT1 oscillation mode */
           /* ||+-------- Be sure to set 0 */
           /* ++---------- EXCLK/OSCSEL */
           /*             [High-speed system clock pin operation mode] */
           /*              00: Input port mode */
           /*              01: X1 oscillation mode */
           /*              10: Input port mode */
           /*              11: External clock input mode */

    CSC    = 0b11000000; /* Clock operation status control */
           /* |||||||+--- HIOSTOP */
           /* |||||||       [Internal high-speed oscillation clock operation control] */
           /* |||||||        0: Internal high-speed oscillator operating */
           /* |||||||        1: Internal high-speed oscillator stopped */
           /* ||+++++---- Be sure to set 0 */
           /* |+--------- XTSTOP */
```

```
        /* |          [Subsystem clock operation control] */
        /* |           0: XT1 oscillator operating */
        /* |           1: XT1 oscillator stopped */
        /* +---------- MSTOP */
        /*             [High-speed system clock operation control] */
        /*              0: X1 oscillator operating */
        /*              1: X1 oscillator stopped */

    OSMC   = 0b10000000; /* Operation speed mode */
        /* ||||||++--- FSEL/FLPC */
        /* ||||||     [fCLK frequency selection] */
        /* ||||||      00: Operates at a frequency of 10 MHz or less (default) */
        /* ||||||      01: Operates at a frequency higher than 10 MHz */
        /* ||||||      10: Operates at a frequency of 1 MHz */
        /* ||||||      11: Setting prohibited */
        /* |++++------ Be sure to set 0 */
        /* +---------- RTCLPC */
        /*             [Setting in subsystem clock HALT mode] */
        /*              0: Enables subsystem clock supply to peripheral functions */
        /*              1: Stops subsystem clock supply to peripheral functions except */
        /*                 real-time counter */

    CKC    = 0b00001000; /* Clock selection */
        /* |+|+++++--- CSS/MCM0/MDIV2 to MDIV0 */
        /* | |        [Selection of CPU/peripheral hardware clock (fCLK)] */
        /* | |         00x000: fIH */
        /* | |         00x001: fIH/2 (default) */
        /* | |         00x010: fIH/2^2 */
        /* | |         00x011: fIH/2^3 */
        /* | |         00x100: fIH/2^4 */
        /* | |         00x101: fIH/2^5 */
        /* | |         01x000: fMX */
        /* | |         01x001: fMX/2 */
        /* | |         01x010: fMX/2^2 */
        /* | |         01x011: fMX/2^3 */
        /* | |         01x100: fMX/2^4 */
        /* | |         01x101: fMX/2^5 */
        /* | |         1x0xxx: fSUB */
        /* | |         1x1xxx: fSUB/2 */
```

```
        /* | |         ( x : don't care ) */
        /* | +-------- MCS <Read Only> */
        /* |          [Status of Main system clock (fMAIN)] */
        /* |           0: Internal high-speed oscillation clock (fIH) */
        /* |           1: High-speed system clock (fMX) */
        /* +---------- CLS <Read Only> */
        /*             [Status of CPU/peripheral hardware clock (fCLK)] */
        /*              0: Main system clock (fMAIN) */
        /*              1: Subsystem clock (fSUB) */
}

/************************************************************************

  Main loop

************************************************************************/
void main(void)
{
  const unsigned char aLedOut[4]
   = {0b00000011,0b00000101,0b00000110,0b00000111}; /* Table for turning on the LEDs */
  unsigned char ucSwitchBuffer;                  /* Switch input data storage area */

  while(1){
     /* Acquire valid switch information */
     ucSwitchBuffer = ( P0 & 0b00000011 );

     /* Read the data to display from the table and display */
     P3 = ( aLedOut[ucSwitchBuffer] & 0b00000111 );
  }
}
```

APPENDIX B REVISION HISTORY

Edition	Date Published	Page	Revision
1st edition	September 2009	–	–

For further information,
please contact:

NEC Electronics Corporation
1753, Shimonumabe, Nakahara-ku,
Kawasaki, Kanagawa 211-8668,
Japan
Tel: 044-435-5111
http://www.necel.com/

[America]

NEC Electronics America, Inc.
2880 Scott Blvd.
Santa Clara, CA 95050-2554, U.S.A.
Tel: 408-588-6000
800-366-9782
http://www.am.necel.com/

[Europe]

NEC Electronics (Europe) GmbH
Arcadiastrasse 10
40472 Düsseldorf, Germany
Tel: 0211-65030
http://www.eu.necel.com/

Hanover Office
Podbielskistrasse 166 B
30177 Hannover
Tel: 0 511 33 40 2-0

Munich Office
Werner-Eckert-Strasse 9
81829 München
Tel: 0 89 92 10 03-0

Stuttgart Office
Industriestrasse 3
70565 Stuttgart
Tel: 0 711 99 01 0-0

United Kingdom Branch
Cygnus House, Sunrise Parkway
Linford Wood, Milton Keynes
MK14 6NP, U.K.
Tel: 01908-691-133

Succursale Française
9, rue Paul Dautier, B.P. 52
78142 Velizy-Villacoublay Cédex
France
Tel: 01-3067-5800

Sucursal en España
Juan Esplandiu, 15
28007 Madrid, Spain
Tel: 091-504-2787

Tyskland Filial
Täby Centrum
Entrance S (7th floor)
18322 Täby, Sweden
Tel: 08 638 72 00

Filiale Italiana
Via Fabio Filzi, 25/A
20124 Milano, Italy
Tel: 02-667541

Branch The Netherlands
Steijgerweg 6
5616 HS Eindhoven
The Netherlands
Tel: 040 265 40 10

[Asia & Oceania]

NEC Electronics (China) Co., Ltd
7th Floor, Quantum Plaza, No. 27 ZhiChunLu Haidian
District, Beijing 100083, P.R.China
Tel: 010-8235-1155
http://www.cn.necel.com/

Shanghai Branch
Room 2509-2510, Bank of China Tower,
200 Yincheng Road Central,
Pudong New Area, Shanghai, P.R.China P.C:200120
Tel:021-5888-5400
http://www.cn.necel.com/

Shenzhen Branch
Unit 01, 39/F, Excellence Times Square Building,
No. 4068 Yi Tian Road, Futian District, Shenzhen,
P.R.China P.C:518048
Tel:0755-8282-9800
http://www.cn.necel.com/

NEC Electronics Hong Kong Ltd.
Unit 1601-1613, 16/F., Tower 2, Grand Century Place,
193 Prince Edward Road West, Mongkok, Kowloon, Hong Kong
Tel: 2886-9318
http://www.hk.necel.com/

NEC Electronics Taiwan Ltd.
7F, No. 363 Fu Shing North Road
Taipei, Taiwan, R. O. C.
Tel: 02-8175-9600
http://www.tw.necel.com/

NEC Electronics Singapore Pte. Ltd.
238A Thomson Road,
#12-08 Novena Square,
Singapore 307684
Tel: 6253-8311
http://www.sg.necel.com/

NEC Electronics Korea Ltd.
11F., Samik Lavied'or Bldg., 720-2,
Yeoksam-Dong, Kangnam-Ku,
Seoul, 135-080, Korea
Tel: 02-558-3737
http://www.kr.necel.com/

G0706