JEITA Package Code	RENESAS Code	Previous Code	MASS[Typ.]
P-LFQFP216-24x24-0.40	PLQP0216LB-A	FP-216/FP-216V	1.9g

NOTE)
1. DIMENSIONS"*1"AND"*2" DO NOT INCLUDE MOLD FLASH
2. DIMENSION"*3"DOES NOT INCLUDE TRIM OFFSET.

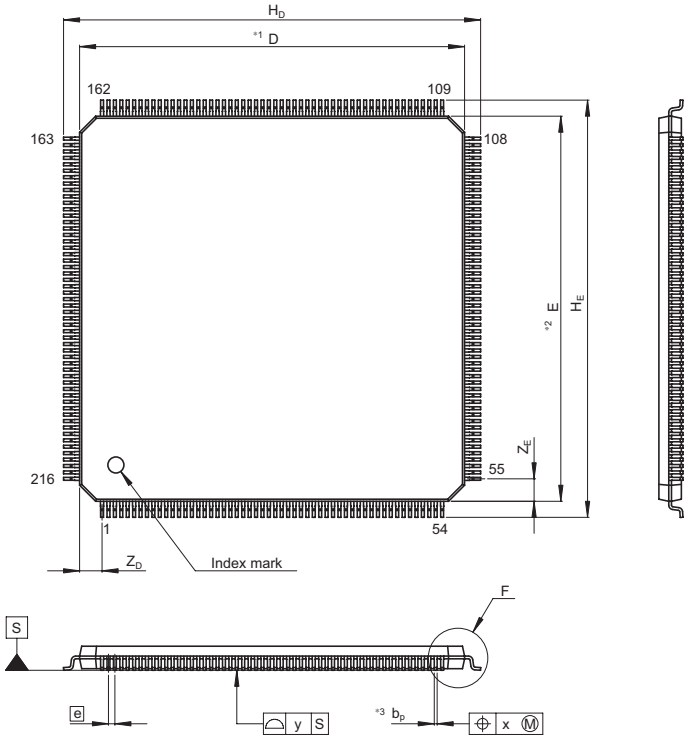

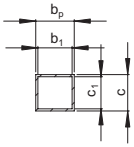

Terminal cross section

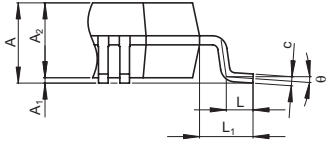

Detail F

Reference Symbol	Dimension in Millimeters		
	Min	Nom	Max
D	—	24	—
E	—	24	—
A_2	—	1.40	—
H_D	25.8	26.0	26.2
H_E	25.8	26.0	26.2
A	—	—	1.70
A_1	0.05	0.10	0.15
b_p	0.13	0.18	0.23
b_1	—	0.16	—
c	0.12	0.17	0.22
c_1	—	0.15	—
θ	0°	—	8°
e	—	0.4	—
x	—	—	0.07
y	—	—	0.08
Z_D	—	1.4	—
Z_E	—	1.4	—
L	0.4	0.5	0.6
L_1	—	1.0	—