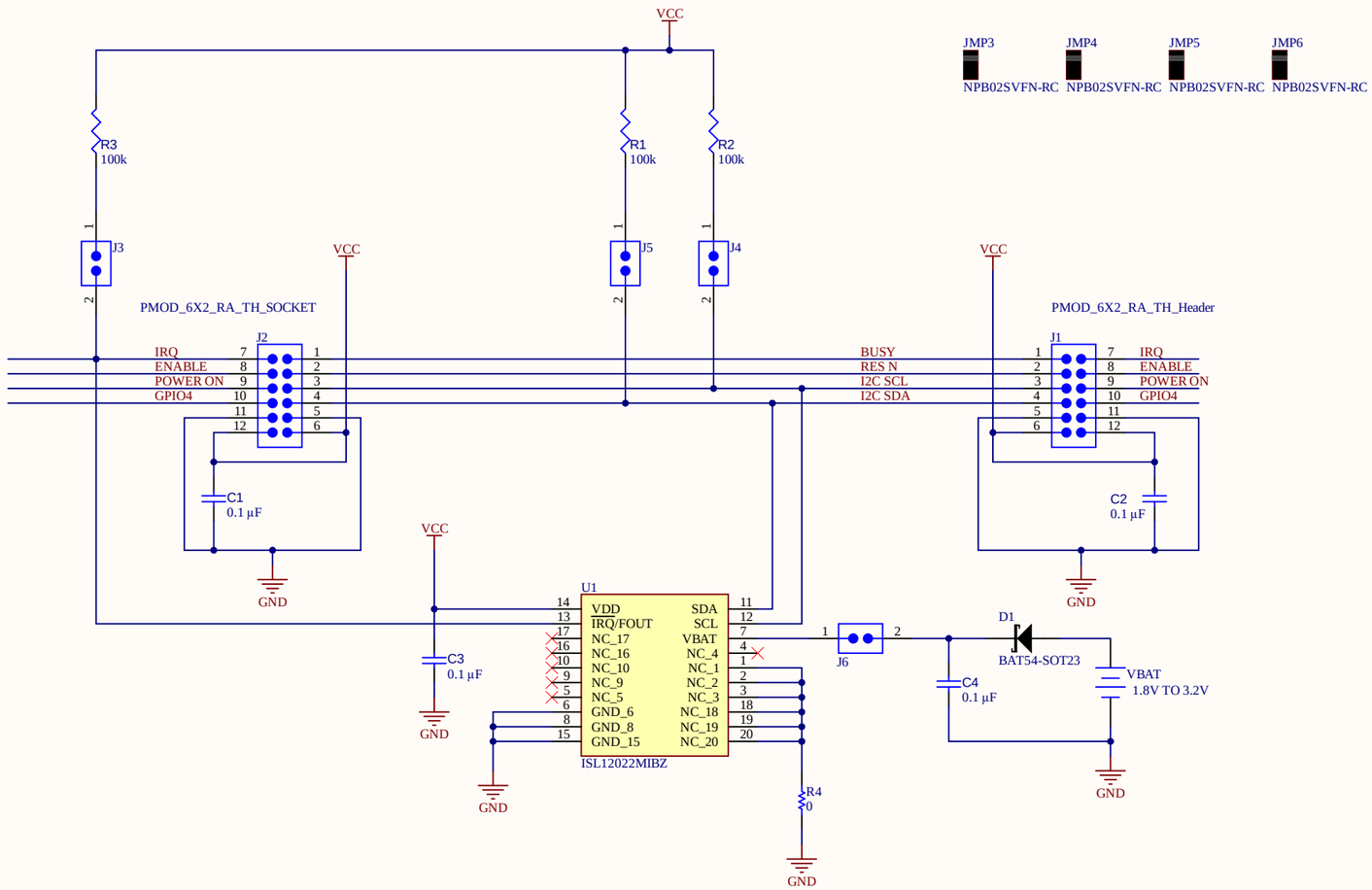

QCIOT-RTC22MPOCZ

Version: REV B	Document Revision: REV B
Release Date: 22 MARCH 2024	Sheet 1 of 1
File: QCIOT_RTC22MPOCZ.SchDoc	

RENESAS
www.renesas.com

60

Last Updated: 3/23/2024