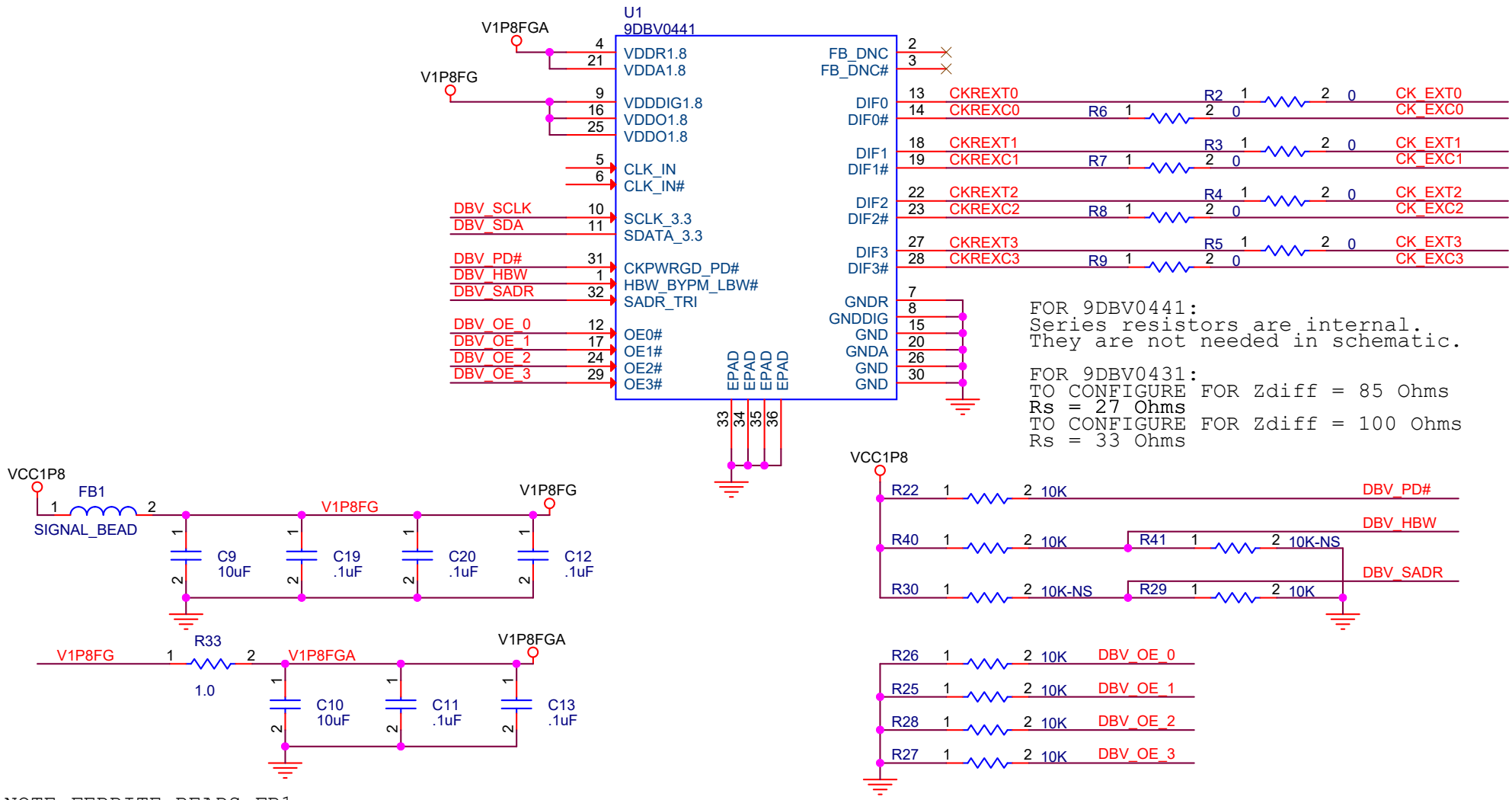

NOTE:FERRITE BEADS FB1 =

Manufacture	Part Number	Z@100MHz	PkgSz	DC res.	Current(Ma)
muRata	BLM21A601R	600	0805	0.30	600
TDK	MMZ2012S601A	600	0805	0.30	600
STEWARD	HZ0805E601R	600	0805	0.30	600
AssocCmpTch	CBG0805-600-50	600	0805	0.30	600

Manufacture	Part Number	Z@100MHz	PkgSz	DC res.	Current(Ma)
muRata	BLM18AG601SN1	600	1608	0.50	200
muRata	BLM18BD601SN1_PB	600	1608	0.65	200
Ceratech	HB-1T1608-601	600	1608	0.50	200
TDK	MMZ1608R301A	300	1608	0.20	500

Layout notes.

1. Route power from bead through bulk capacitor pad then through 0.1uF capacitor pad then to clock chip Vdd pad.

2. Do not share ground vias. One ground pin one ground via.

Revision history

0.1 8/31/2012 first publication

0.2 12/12/2019 Change C10 to 10 uF

Integrated Device Technology

San Jose, CA

Size	Document Number	Rev
A	9DBV0441_SCH	0.2

Date: Thursday, December 12, 2019 Sheet 1 of 1