1. Description

The GreenPAK DIP Adapter is a small PCB that lets you adapt STQFN packages into a DIP footprint. This board can speed up your design prototyping and testing. This small board 1.06x2.34 inch uses 20 pins DIP footprint with 0.3 inch width. You can also use this adapter for prototyping by making MSTQFN package compatible with solder free breadboards.

2. Features

- Low cost
- Simplifies prototyping of SMT IC's
- Optional V_{DD} LED indicator
- Decoupling capacitor included
- Optional I^2C pull-up resistors

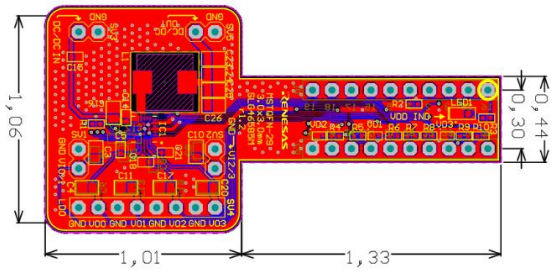

Note 1 All sizes in inches.

3. Top View

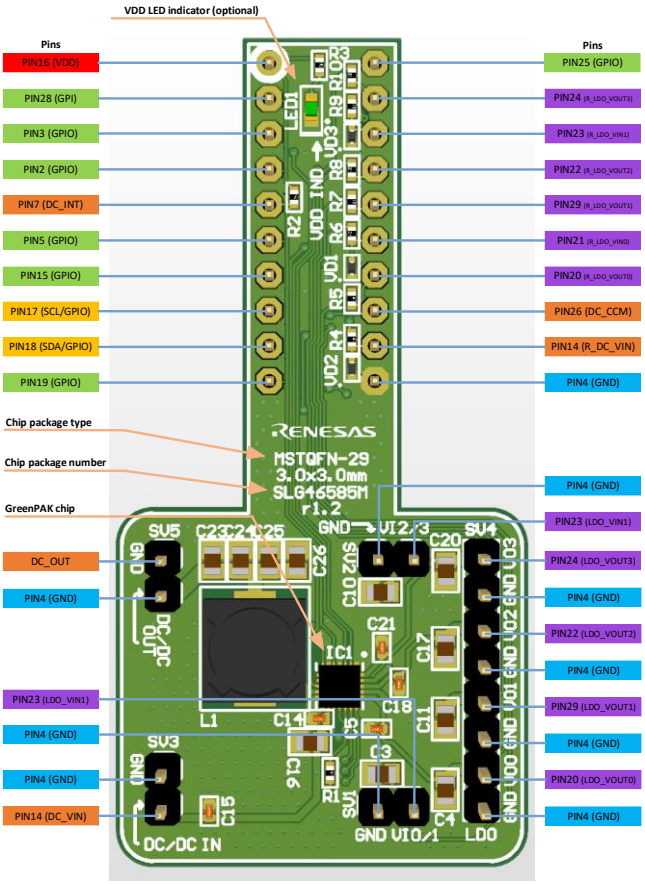

4. Bottom View

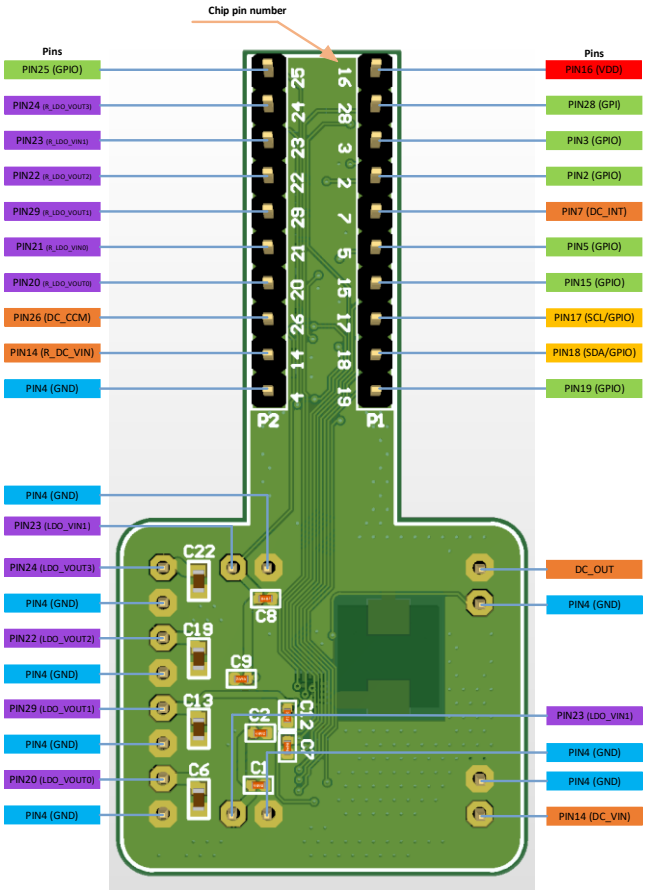

© 2022 Renesas Electronics Corporation

5. Board Schematic

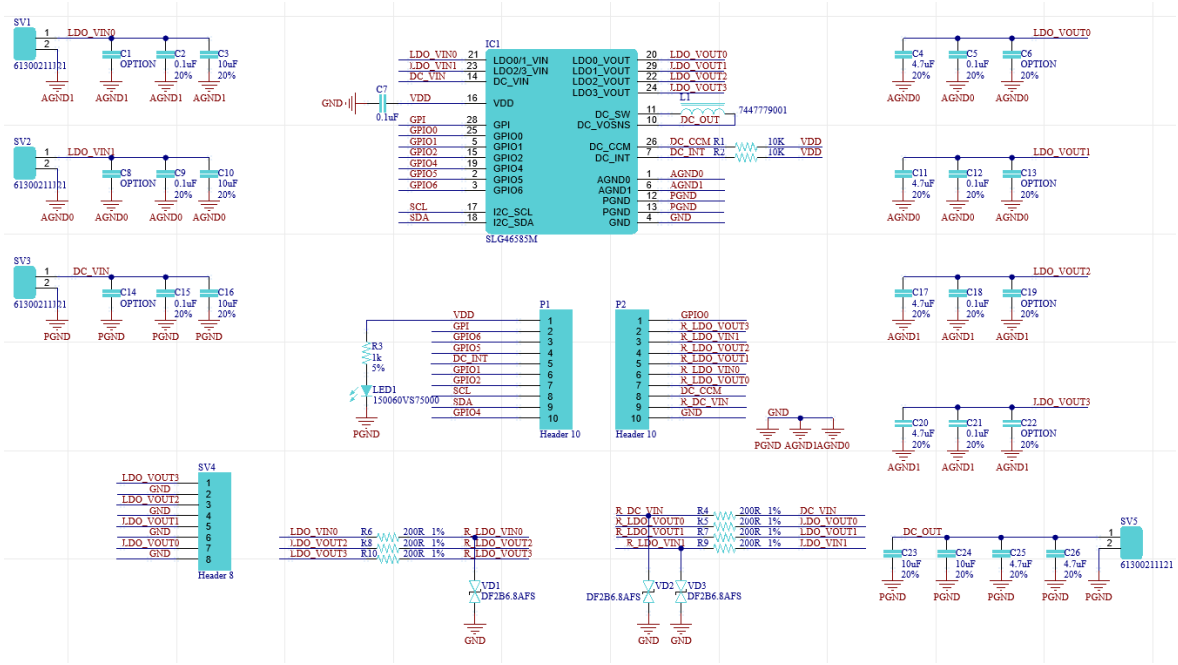

© 2022 Renesas Electronics Corporation