RC190xx

PCIe Gen7 Fanout Buffer Family with LOS

Description

The RC190xx (RC19024, RC19020, RC19020A072, RC19016, RC19013, RC19008, RC19004, and RC19002) ultra-high performance fanout buffers support PCIe Gen1-7. They provide a Loss-Of-Signal (LOS) output for system monitoring and redundancy. The devices also incorporate Power Down Tolerant (PDT) and Flexible Startup Sequencing (FSS) features, easing system design. They can drive both source-terminated and double-terminated loads, operating up to 400MHz.

The family offers 2, 4, 8, 13, 16, 20, and 24 Low-Power (LP) HCSL output pairs in 3 × 3 mm to 10 × 10 mm packages. The RC190xx devices offer higher output counts in smaller packages compared to earlier buffer families. The buffers support both Common Clock (CC) and Independent Reference (IR) PCIe clock architectures.

Applications

- Cloud/High-performance computing
- nVME storage
- Networking
- AI accelerators

Features

- PCIe Gen5 additive phase jitter: 5.8fs RMS
- PCIe Gen6 additive phase jitter: 3.4fs RMS
- PCIe Gen7 additive phase jitter: 2.4fs RMS
- DB2000Q additive phase jitter: 10fs RMS
- 12kHz to 20MHz additive phase jitter: 30fs RMS at 156.25MHz
- Power Down Tolerant (PDT) inputs
- Flexible Startup Sequencing (FSS)
- Automatic Clock Parking (ACP) upon loss of CLKIN
- Spread-spectrum tolerant
- CLKIN accepts HCSL or LVDS signal levels
- -40 to +105°C, 3.3V ±10% operation
- All devices except RC19002:
  - Selectable output slew rate via pin/SMBus
  - 4-wire Side-Band Interface supports high-speed serial output enable and device daisy-chaining
  - 9 SMBus addresses plus write protection
  - 85Ω or 100Ω (A100 suffix) output impedance
  - Pin-selectable slew rate
- RC19002: Pin-selectable output impedance

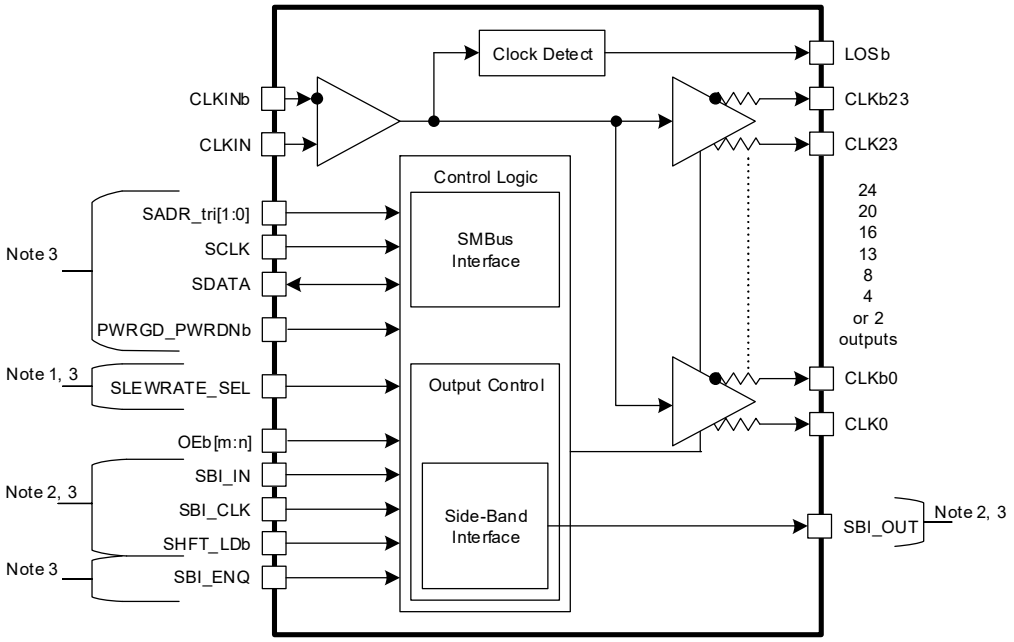

1. RC19016/13/08/04 only. Other devices use SMBus.
2. Some devices mux SBI with OEb pins. See specific pinouts. Devices with SBI have dedicated SBI_ENQ pin.
3. Does not apply to the RC19002. On RC19002, the SLEWRATE_SEL pin is ZOUT_SEL.

Figure 1. RC190xx Block Diagram

© 2022-2026 Renesas Electronics

Contents

1. Pin Information . . . 4
- 1.1 Signal Types . . . 4
- 1.2 RC19024 Pin Information . . . 5
  - 1.2.1 RC19024 Pin Assignments . . . 5
  - 1.2.2 RC19024 Pin Descriptions . . . 6
- 1.3 RC19020 Pin Information . . . 9
  - 1.3.1 RC19020 Pin Assignments . . . 9
  - 1.3.2 RC19020 Pin Descriptions . . . 10
- 1.4 RC19020A072 Pin Information . . . 13
  - 1.4.1 RC19020A072 Pin Assignments . . . 13
  - 1.4.2 RC19020A072 Pin Descriptions . . . 13
- 1.5 RC19016 Pin Information . . . 17
  - 1.5.1 RC19016 Pin Assignments . . . 17
  - 1.5.2 RC19016 Pin Descriptions . . . 17
- 1.6 RC19013 Pin Information . . . 20
  - 1.6.1 RC19013 Pin Assignments . . . 20
  - 1.6.2 RC19013 Pin Descriptions . . . 21
- 1.7 RC19008 Pin Information . . . 23
  - 1.7.1 RC19008 Pin Assignments . . . 23
  - 1.7.2 RC19008 Pin Descriptions . . . 23
- 1.8 RC19004 Pin Information . . . 26
  - 1.8.1 RC19004 Pin Assignments . . . 26
  - 1.8.2 RC19004 Pin Descriptions . . . 26
- 1.9 RC19002 Pin Information . . . 28
  - 1.9.1 RC19002 Pin Assignments . . . 28
  - 1.9.2 RC19002 Pin Descriptions . . . 28

2. Specifications . . . 30
- 2.1 Absolute Maximum Ratings . . . 30
- 2.2 Recommended Operating Conditions . . . 30
- 2.3 Thermal Specifications . . . 30
- 2.4 Electrical Specifications . . . 32
  - 2.4.1 Phase Jitter . . . 32
  - 2.4.2 Output Frequencies, Startup Time, and LOS Timing . . . 34
  - 2.4.3 RC1902xA CLK AC/DC Output Characteristics . . . 35
  - 2.4.4 RC1901xA/RC1900xA CLK AC/DC Output Characteristics . . . 37
  - 2.4.5 Output-to-Output and Input-to-Output Skew . . . 42
  - 2.4.6 I/O Signals . . . 43
  - 2.4.7 Power Supply Current . . . 44
  - 2.4.8 CLKIN AC/DC Characteristics . . . 48
  - 2.4.9 SMBus Electrical Characteristics . . . 48
  - 2.4.10 Side-Band Interface . . . 50

3. Test Loads . . . 51

4. General SMBus Serial Interface Information . . . 53
- 4.1 How to Write . . . 53
- 4.2 How to Read . . . 54
- 4.3 SMBus Bit Types . . . 55
- 4.4 Write Lock Functionality . . . 55
- 4.5 SMBus Address Decode . . . 55
- 4.6 RC19024 SMBus Registers . . . 56
- 4.7 RC19020 SMBus Registers . . . 62
- 4.8 RC19020A072 SMBus Registers . . . 67
- 4.9 RC19016/013/008/004 SMBus Registers . . . 72

5. Applications Information . . . 77
5.1 Inputs, Outputs, and Output Enable Control . . . 77
5.1.1 Recommendations for Unused Inputs and Outputs . . . 77
5.1.2 Differential CLKIN Configurations . . . 77
5.1.3 Differential CLK Output Configurations . . . 78
5.2 Power Down Tolerant Pins . . . 79
5.3 Flexible Startup Sequencing . . . 79
5.4 Loss of Signal and Automatic Clock Parking . . . 79
5.5 Output Enable Control . . . 80
5.5.1 SMBus Output Enable Bits . . . 81
5.5.2 Output Enable (OEb) Pins . . . 81
5.5.3 RC19024/020 Clock Buffer OEb Pins . . . 81
5.5.4 Side-Band Interface (SBI) . . . 83
5.5.5 Output Enable/Disable Priority . . . 88
5.6 PCB Layout Recommendations . . . 88
6. Package Outline Drawings . . . 88
7. Marking Diagrams . . . 89
7.1 RC1901xA/RC1900xA Marking Diagrams . . . 89
7.2 RC1902xA Marking Diagrams . . . 90
8. Ordering Information . . . 91
9. Revision History . . . 92

1. Pin Information

1.1 Signal Types

Term	Description [1]
I	Input
O	Output
OD	Open Drain Output
I/O	Bi-Directional
PD	Pull-down
PU	Pull-up
Z	Tristate
D	Driven
X	Don’t care
SE	Single ended
DIF	Differential
PWR	3.3 V power
GND	Ground
PDT	Power Down Tolerant: These signals must tolerate being driven when the device is powered down.

1. Some pins have both internal pull-up and pull-down resistors which bias the pins to VDD/2. Other pins are multi-mode and have an internal pull-up or internal pull-down depending on the mode.

1.2 RC19024 Pin Information

1.2.1 RC19024 Pin Assignments

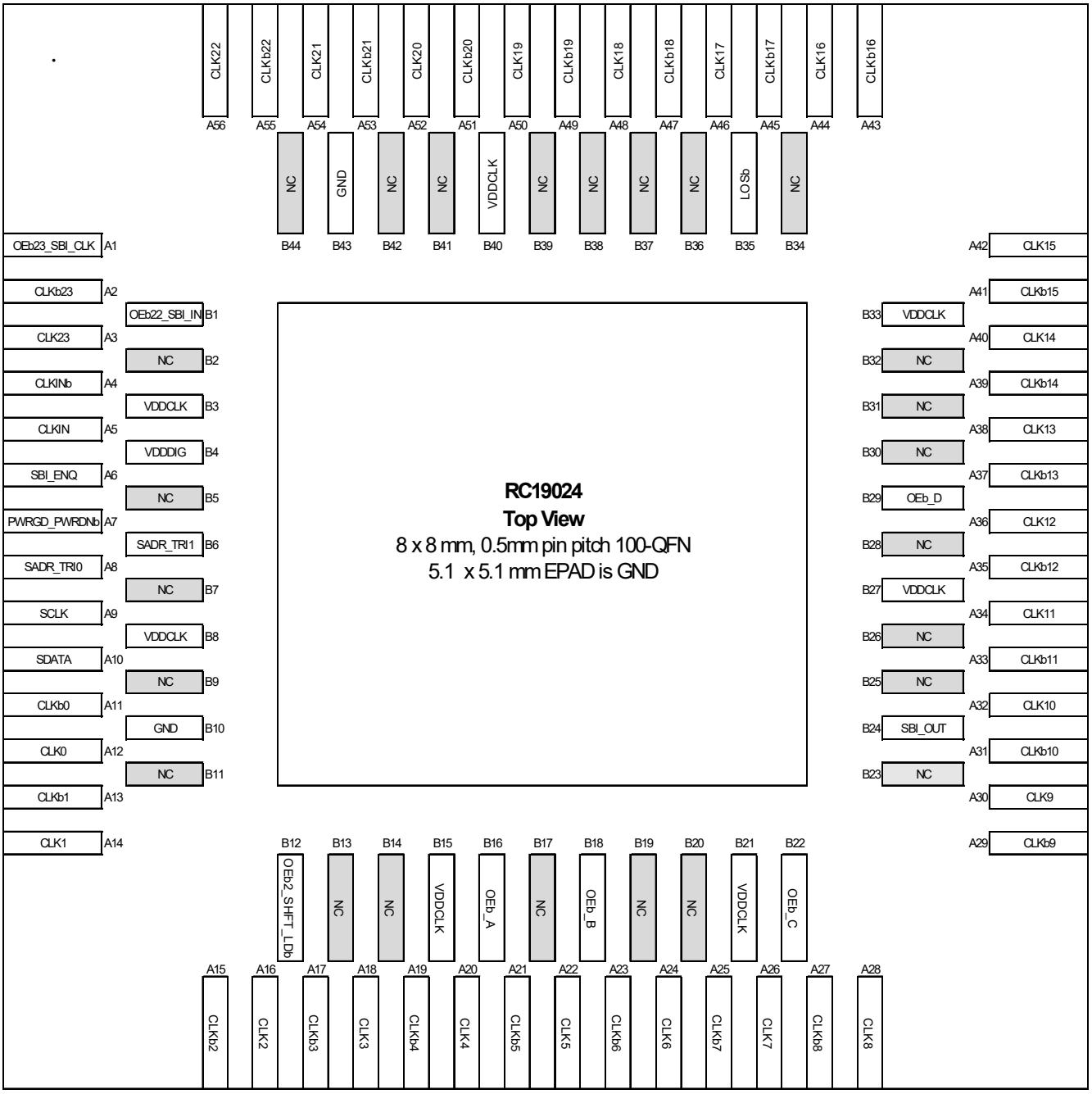

Figure 2. RC19024 100-VFQFPN – Top View

1.2.2 RC19024 Pin Descriptions

Table 1. RC19024 Pin Descriptions

Pin Number	Pin Name	Pin Type	Description
A1	OEb23_SBI_CLK	I, SE, PD, PDT	Active low input for enabling output 23 or the clock pin for the SBI shift register. The function is this pin is controlled by the SBEN or SBI_ENQ pin. For more information, see Side-Band Interface (SBI). OE mode: 0 = enable output, 1 = disable output. Side-Band mode: Clocks data into the SBI on the rising edge.
A2	CLK23B	O, DIF	Complementary clock output.
A3	CLK23	O, DIF	True clock output.
A4	CLKINb	I, DIF, PDT	Complementary clock input.
A5	CLKIN	I, DIF, PDT	True clock input.
A6	SBI_ENQ	I, SE, PD, PDT	Input that selects function of pins that are multiplexed between OE and SBI functionality. SMBus output enable bits and non-multiplexed OE pins remain functional when SBI is enabled. This pin must be strapped to its desired state. It cannot dynamically change. 0 = SBI is disabled. Multiplexed pins function as output enables. 1 = SBI is enabled. Multiplexed pins function as SBI control pins.
A7	PWRGD_PWRDNb	I, SE, PU, PDT	Input notifies device to sample Latched inputs and start up on first high assertion. Low enters Power Down Mode, subsequent high assertions exit Power Down Mode.
A8	SADR_tri0	I, SE, PD, PU	SMBus address bit. This is a tri-level input that works in conjunction with other SADR pins, if present, to decode SMBus Addresses. See the SMBus Address Decode table and the tri-level input thresholds in the electrical tables.
A9	SCLK	I, SE, PDT	Clock pin of SMBus interface.
A10	SDAT	I/O, OD, PDT	Data pin for SMBus interface.
A11	CLK0b	O, DIF	Complementary clock output.
A12	CLK0	O, DIF	True clock output.
A13	CLK1b	O, DIF	Complementary clock output.
A14	CLK1	O, DIF	True clock output.
A15	CLK2b	O, DIF	Complementary clock output.
A16	CLK2	O, DIF	True clock output.
A17	CLK3b	O, DIF	Complementary clock output.
A18	CLK3	O, DIF	True clock output.
A19	CLK4b	O, DIF	Complementary clock output.
A20	CLK4	O, DIF	True clock output.
A21	CLK5b	O, DIF	Complementary clock output.
A22	CLK5	O, DIF	True clock output.
A23	CLK6b	O, DIF	Complementary clock output.
A24	CLK6	O, DIF	True clock output.
A25	CLK7b	O, DIF	Complementary clock output.
A26	CLK7	O, DIF	True clock output.
A27	CLK8b	O, DIF	Complementary clock output.
A28	CLK8	O, DIF	True clock output.
A29	CLK9b	O, DIF	Complementary clock output.
A30	CLK9	O, DIF	True clock output.

Table 1. RC19024 Pin Descriptions (Cont.)

Pin Number	Pin Name	Pin Type	Description
A31	CLK10b	O, DIF	Complementary clock output.
A32	CLK10	O, DIF	True clock output.
A33	CLK11b	O, DIF	Complementary clock output.
A34	CLK11	O, DIF	True clock output.
A35	CLK12b	O, DIF	Complementary clock output.
A36	CLK12	O, DIF	True clock output.
A37	CLK13b	O, DIF	Complementary clock output.
A38	CLK13	O, DIF	True clock output.
A39	CLK14b	O, DIF	Complementary clock output.
A40	CLK14	O, DIF	True clock output.
A41	CLK15b	O, DIF	Complementary clock output.
A42	CLK15	O, DIF	True clock output.
A43	CLK16b	O, DIF	Complementary clock output.
A44	CLK16	O, DIF	True clock output.
A45	CLK17b	O, DIF	Complementary clock output.
A46	CLK17	O, DIF	True clock output.
A47	CLK18b	O, DIF	Complementary clock output.
A48	CLK18	O, DIF	True clock output.
A49	CLK19b	O, DIF	Complementary clock output.
A50	CLK19	O, DIF	True clock output.
A51	CLK20b	O, DIF	Complementary clock output.
A52	CLK20	O, DIF	True clock output.
A53	CLK21b	O, DIF	Complementary clock output.
A54	CLK21	O, DIF	True clock output.
A55	CLK22b	O, DIF	Complementary clock output.
A56	CLK22	O, DIF	True clock output.
B1	OEb22_SBI_IN	I, SE, PD, PDT	Active low input for enabling output 22 or the data pin for the Side-Band Interface. The function is this pin is controlled by the SBEN or SBI_ENQ pin. Refer to the Side-Band Interface (SBI) section for details. OE mode: 0 = enable output, 1 = disable output. Side-Band mode: SBI shift register data input pin
B2	NC	NC	No connect.
B3	VDDCLK	PWR	Clock Power supply.
B4	VDDDIG	PWR	Digital Power supply.
B5	NC	NC	No connect
B6	SADR_tri1	I, SE, PD, PU	SMBus address bit. This is a tri-level input that works in conjunction with other SADR pins, if present, to decode SMBus Addresses. See the SMBus Address Decode table and the tri-level input thresholds in the electrical tables.
B7	NC	NC	No connect.
B8	VDDCLK	PWR	Clock Power supply.
B9	NC	NC	No connect
B10	GND	GND	Connect to ground.

Table 1. RC19024 Pin Descriptions (Cont.)

Pin Number	Pin Name	Pin Type	Description
B11	NC	NC	No connect.
B12	OEb2_SHFT_LDb	I, SE, PD, PDT	Active low input for enabling output 2 or SHFT_LDb pin for the Side-Band Interface. The function of this pin is controlled by the SBEN or SBI_ENQ pin. Refer to the Side-Band Interface (SBI) section for details OE mode: 0 = Enable output, 1 = Disable output. Side-Band mode: 0 = Disable SBI shift register, 1 = Enable SBI shift register. A falling edge transfers SBI shift register contents to SBI output control register.
B13	NC	NC	No connect.
B14	NC	NC	No connect.
B15	VDDCLK	PWR	Clock Power supply.
B16	OEb_A	I, SE, PD, PDT	Active low input for enabling output group A. See the OEb_ASSIGNMENT[2:0] registers for details. 0 = enable output, 1 = disable output.
B17	NC	NC	No connect.
B18	OEb_B	I, SE, PD, PDT	Active low input for enabling output group B. See the OEb_ASSIGNMENT registers for details. 0 = enable output, 1 = disable output.
B19	NC	NC	No connect.
B20	NC	NC	No connect.
B21	VDDCLK	PWR	Clock Power supply.
B22	OEb_C	I, SE, PD, PDT	Active low input for enabling output group C. See the OEb_ASSIGNMENT registers for details. 0 = enable output, 1 = disable output.
B23	NC	NC	No connect.
B24	SBI_OUT	O, SE	Side-Band Interface data output.
B25	NC	NC	No connect.
B26	NC	NC	No connect.
B27	VDDCLK	PWR	Clock Power supply.
B28	NC	NC	No connect.
B29	OEb_D	I, SE, PD, PDT	Active low input for enabling output group D. See the OEb_ASSIGNMENT registers for details. 0 = enable output, 1 = disable output.
B30	NC	NC	No connect.
B31	NC	NC	No connect.
B32	NC	NC	No connect.
B33	VDDCLK	PWR	Clock Power supply.
B34	NC	NC	No connect.
B35	LOSb	O, OD, PDT	Output indicating Loss of Input Signal. This pin is an open drain output and requires an external pull up resistor for proper functionality. A low output on this pin indicates a loss of signal on the input clock.
B36	NC	NC	No connect.
B37	NC	NC	No connect.
B38	NC	NC	No connect.
B39	NC	NC	No connect.
B40	VDDCLK	PWR	Clock Power supply.

Table 1. RC19024 Pin Descriptions (Cont.)

Pin Number	Pin Name	Pin Type	Description
B41	NC	NC	No connect.
B42	NC	NC	No connect.
B43	GND	GND	Connect to ground.
B44	NC	NC	No connect.
N/A	EPAD	GND	Connect Epad to ground.

1.3 RC19020 Pin Information

1.3.1 RC19020 Pin Assignments

Figure 3. RC19020 80-VFQFPN – Top View

The RC19020 is pin-compatible to the 9QXL2001B (DB2000QL) with SBI_OUT and LOSb pins added to 9QXL2001B NC pins (C2 and G11).

1.3.2 RC19020 Pin Descriptions

Table 2. RC19020 Pin Descriptions

Pin Number	Pin Name	Type	Description
A1	CLK17	O, DIF	True clock output.
A2	CLKb16	O, DIF	Complementary clock output.
A3	CLK16	O, DIF	True clock output.
A4	CLKb15	O, DIF	Complementary clock output.
A5	CLK15	O, DIF	True clock output.
A6	CLKb14	O, DIF	Complementary clock output.
A7	CLK14	O, DIF	True clock output.
A8	CLKb13	O, DIF	Complementary clock output.
A9	CLK13	O, DIF	True clock output.
A10	CLKb12	O, DIF	Complementary clock output.
A11	CLK12	O, DIF	True clock output.
A12	CLKb11	O, DIF	Complementary clock output.
B1	CLKb17	O, DIF	Complementary clock output.
B2	VDDCLK	PWR	Power supply for clock outputs.
B3	NC	NC	No connect.
B4	SADR_tri0	I, SE, PD, PU	SMBus address bit. This is a tri-level input that works in conjunction with other SADR pins, if present, to decode SMBus Addresses. See the SMBus Address Decode table and the tri-level input thresholds in the electrical tables.
B5	NC	NC	No connect.
B6	VDDCLK	PWR	Power supply for clock outputs.
B7	NC	NC	No connect.
B8	SADR_tri1	I, SE, PD, PU	SMBus address bit. This is a tri-level input that works in conjunction with other SADR pins, if present, to decode SMBus Addresses. See the SMBus Address Decode table and the tri-level input thresholds in the electrical tables.
B9	NC	NC	No connect.
B10	OEb12	I, SE, PD, PDT	Active low input for enabling output 12. 0 = enable output, 1 = disable output.
B11	VDDCLK	PWR	Power supply for clock outputs.
B12	CLK11	O, DIF	True clock output.
C1	CLK18	O, DIF	True clock output.
C2	SBI_OUT	O, SE	Side-Band Interface data output.
C11	OEb11	I, SE, PD, PDT	Active low input for enabling output 11. 0 = enable output, 1 = disable output.
C12	CLKb10	O, DIF	Complementary clock output.
D1	CLKb18	O, DIF	Complementary clock output.
D2	NC	NC	No connect.
D11	NC	NC	No connect.
D12	CLK10	O, DIF	True clock output.
E1	CLK19	O, DIF	True clock output.

Table 2. RC19020 Pin Descriptions (Cont.)

Pin Number	Pin Name	Type	Description
E2	SBI_ENQ	I, SE, PD, PDT	Input that selects function of pins that are multiplexed between OE and SBI functionality. SMBus output enable bits and non-multiplexed OE pins remain functional when SBI is enabled. This pin must be strapped to its desired state. It cannot dynamically change. 0 = SBI is disabled. Multiplexed pins function as output enables. 1 = SBI is enabled. Multiplexed pins function as SBI control pins.
E11	OEb10_SHFT_LDb	I, SE, PD, PDT	Active low input for enabling output 10 or SHFT_LDb pin for the Side-Band Interface. The function of this pin is controlled by the SBEN or SBI_ENQ pin. For more information, see Side-Band Interface (SBI). OE mode: 0 = Enable output, 1 = Disable output. Side-Band mode: 0 = Disable SBI shift register, 1 = Enable SBI shift register. A falling edge transfers SBI shift register contents to SBI output control register.
E12	OEb9	I, SE, PD, PDT	Active low input for enabling output 9. 0 = enable output, 1 = disable output.
F1	CLKb19	O, DIF	Complementary clock output.
F2	NC	NC	No connect.
F11	NC	NC	No connect.
F12	CLKb9	O, DIF	Complementary clock output.
G1	CLKIN	I, DIF, PDT	True clock input.
G2	NC	NC	No connect.
G11	LOSb	O, OD, PDT	Output indicating Loss of Input Signal. This pin is an open drain output and requires an external pull up resistor for proper functionality. A low output on this pin indicates a loss of signal on the input clock.
G12	CLK9	O, DIF	True clock output.
H1	CLKINb	I, DIF, PDT	Complementary clock input.
H2	VDDR	PWR	Power supply for clock input (receiver).
H11	OEb8	I, SE, PD, PDT	Active low input for enabling output 8. 0 = enable output, 1 = disable output.
H12	CLKb8	O, DIF	Complementary clock output.
J1	CLK0	O, DIF	True clock output.
J2	NC	NC	No connect.
J11	NC	NC	No connect.
J12	CLK8	O, DIF	True clock output.
K1	CLKb0	O, DIF	Complementary clock output.
K2	NC	NC	No connect.
K11	OEb7	I, SE, PD, PDT	Active low input for enabling output 7. 0 = enable output, 1 = disable output.
K12	CLKb7	O, DIF	Complementary clock output.
L1	CLK1	O, DIF	True clock output.
L2	VDDCLK	PWR	Power supply for clock outputs.
L3	NC	NC	No connect.
L4	SDATA	I/O, SE, OD, PDT	Data pin for SMBus interface.

Table 2. RC19020 Pin Descriptions (Cont.)

Pin Number	Pin Name	Type	Description
L5	SCLK	I, SE, PDT	Clock pin of SMBus interface.
L6	NC	NC	No connect.
L7	NC	NC	No connect.
L8	OEb5_SBI_IN	I, SE, PD, PDT	Active low input for enabling output 5or the data pin for the Side-Band Interface. The function is this pin is controlled by the SBEN or SBI_ENQ pin. For more information, see Side-Band Interface (SBI). OE mode: 0 = Enable output, 1 = Disable output. Side-Band mode: SBI shift register data input pin
L9	NC	NC	No connect
L10	OEb6_SBI_CLK	I, SE, PD, PDT	Active low input for enabling output 6 or the clock pin for the SBI shift register. The function is this pin is controlled by the SBI_ENQ pin. For more information, see Side-Band Interface (SBI). OE mode: 0 = Enable output, 1 = Disable output. Side-Band mode: Clocks data into the SBI shift register on the rising edge.
L11	VDDCLK	PWR	Power supply for clock outputs.
L12	CLK7	O, DIF	True clock output.
M1	CLKb1	O, DIF	Complementary clock output.
M2	CLK2	O, DIF	True clock output.
M3	CLKb2	O, DIF	Complementary clock output.
M4	CLK3	O, DIF	True clock output.
M5	CLKb3	O, DIF	Complementary clock output.
M6	PWRGD_PWRDNb	I, SE, PD, PDT	Input notifies device to sample latched inputs and start up on first high assertion. Low enters Power Down Mode, subsequent high assertions exit Power Down Mode.
M7	CLK4	O, DIF	True clock output.
M8	CLKb4	O, DIF	Complementary clock output.
M9	CLK5	O, DIF	True clock output.
M10	CLKb5	O, DIF	Complementary clock output.
M11	CLK6	O, DIF	True clock output.
M12	CLKb6	O, DIF	Complementary clock output.
N/A	EPAD	GND	Connect Epad to ground.

1.4 RC19020A072 Pin Information

1.4.1 RC19020A072 Pin Assignments

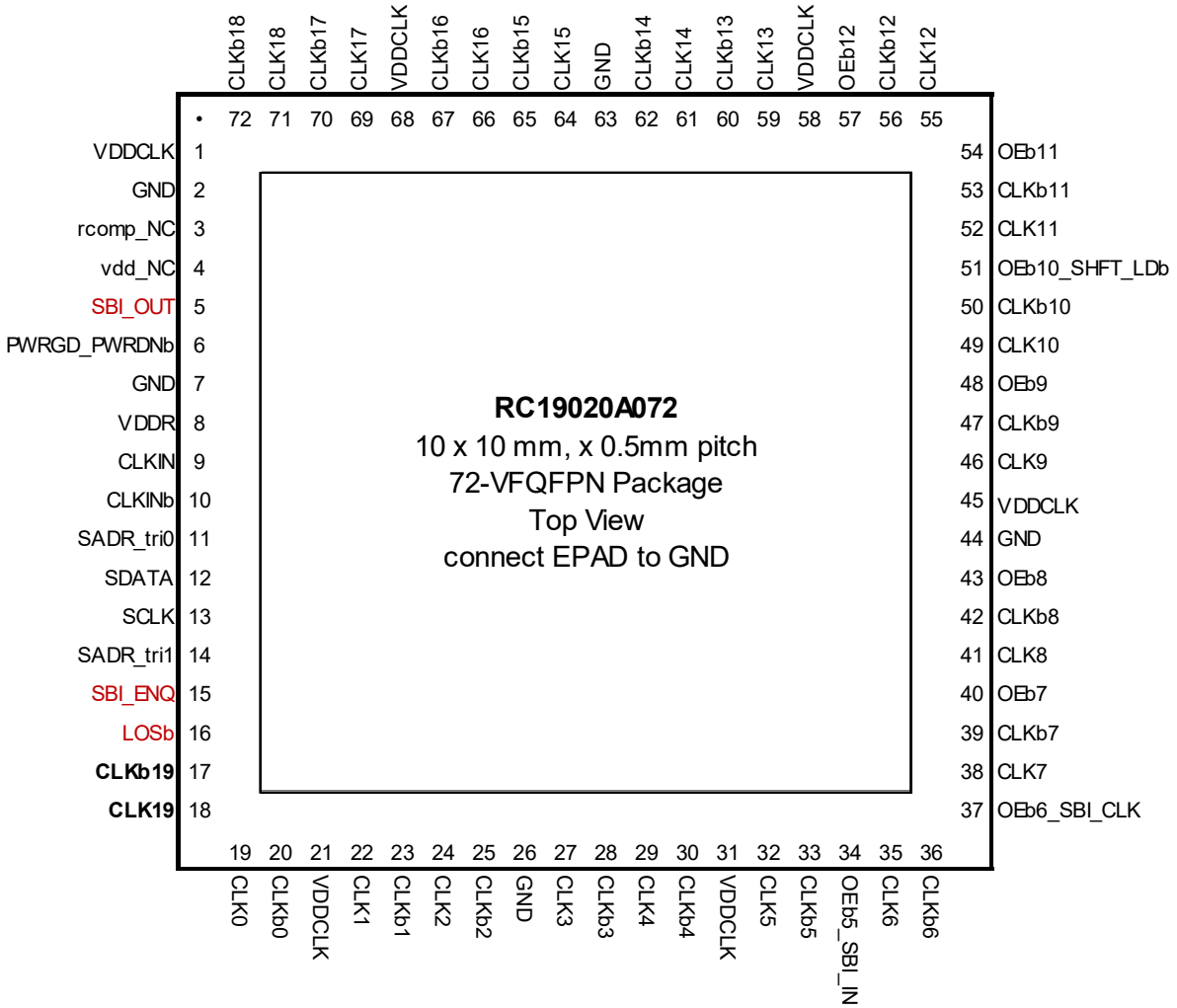

Note: Polarity of CLK19 is reversed from CLK[18:0] per DB2000Q Specification Rev1.2

Figure 4. RC19020A072 72-VFQFPN – Top View

The RC19020A072 is pin-compatible to the 9QXL2000B (DB2000Q) with the SBI_OUT, SBI_ENQ and LOSb pins placed on 9QXL2000 NC pins (5, 15 and 16).

1.4.2 RC19020A072 Pin Descriptions

Table 3. RC19020A072 Pin Descriptions

Pin Number	Pin Name	Type	Description
1	VDDCLK	PWR	Power supply for clock outputs.
2	GND	GND	Ground pin.
3	rcomp_NC	N/A	The DB2000Q specification calls this pin RCOMP. This pin is a true No connect on the Renesas 9QXL2000 device, since it is not needed. Any existing connections on the board may remain to support non-IDT DB2000Q devices.
4	vdd_NC	NC	The DB2000Q specification calls this pin VDD. This pin is a true No connect on the IDT 9QXL2000 device, since it is not needed. Any existing connections on the board may remain to support non-IDT DB2000Q devices.
5	SBI_OUT	O, SE	Side-Band Interface data output.

Table 3. RC19020A072 Pin Descriptions (Cont.)

Pin Number	Pin Name	Type	Description
6	PWRGD_PWRDNb	I, SE, PU, PDT	Input notifies device to sample latched inputs and start up on first high assertion. Low enters Power Down Mode, subsequent high assertions exit Power Down Mode.
7	GND	GND	Ground pin.
8	VDDR	PWR	Power supply for clock input (receiver).
9	CLKIN	I, DIF, PDT	True clock input.
10	CLKINb	I, DIF, PDT	Complementary clock input.
11	SADR_tri0	I, SE, PD, PU	SMBus address bit. This is a tri-level input that works in conjunction with other SADR pins, if present, to decode SMBus Addresses. See the SMBus Address Decode table and refer to the tri-level input thresholds in the electrical tables.
12	SDATA	I/O, SE, OD, PDT	Data pin for SMBus interface.
13	SCLK	I, SE, PDT	Clock pin of SMBus interface.
14	SADR_tri1	I, SE, PD, PU	SMBus address bit. This is a tri-level input that works in conjunction with other SADR pins, if present, to decode SMBus Addresses. See the SMBus Address Decode table and refer to the tri-level input thresholds in the electrical tables.
15	SBI_ENQ	I, SE, PD, PDT	Input that selects function of pins that are multiplexed between OE and SBI functionality. SMBus output enable bits and non-multiplexed OE pins remain functional when SBI is enabled. This pin must be strapped to its desired state. It cannot dynamically change. 0 = SBI is disabled. Multiplexed pins function as output enables. 1 = SBI is enabled. Multiplexed pins function as SBI control pins.
16	LOSb	O, OD, PDT	Output indicating Loss of Input Signal. This pin is an open drain output and requires an external pull up resistor for proper functionality. A low output on this pin indicates a loss of signal on the input clock.
17	CLKb19	O, DIF	Complementary clock output.
18	CLK19	O, DIF	True clock output.
19	CLK0	O, DIF	True clock output.
20	CLKb0	O, DIF	Complementary clock output.
21	VDDCLK	PWR	Power supply for clock outputs.
22	CLK1	O, DIF	True clock output.
23	CLKb1	O, DIF	Complementary clock output.
24	CLK2	O, DIF	True clock output.
25	CLKb2	O, DIF	Complementary clock output.
26	GND	GND	Ground pin.
27	CLK3	O, DIF	True clock output.
28	CLKb3	O, DIF	Complementary clock output.
29	CLK4	O, DIF	True clock output.
30	CLKb4	O, DIF	Complementary clock output.
31	VDDCLK	PWR	Power supply for clock outputs.
32	CLK5	O, DIF	True clock output.
33	CLKb5	O, DIF	Complementary clock output.

Table 3. RC19020A072 Pin Descriptions (Cont.)

Pin Number	Pin Name	Type	Description
34	OEb5_SBI_IN	I, SE, PDT, None or PD	Active low input for enabling output 5 or the data pin for the Side-Band Interface. The function is this pin is controlled by the SBEN or SBI_ENQ pin. Refer to the Side-Band Interface (SBI) section for details. OE mode: 0 = enable output, 1 = disable output. Side-Band mode with internal pull down: SBI shift register data input pin
35	CLK6	O, DIF	True clock output.
36	CLKb6	O, DIF	Complementary clock output.
37	OEb6_SBI_CLK	I, SE, PDT, None or PD	Active low input for enabling output 6 or the clock pin for the SBI shift register. The function is this pin is controlled by the SBEN or SBI_ENQ pin. Refer to the Side-Band Interface (SBI) section for details. OE mode: 0 = enable output, 1 = disable output. Side-Band mode with internal pull down: Clocks data into the SBI shift register on the rising edge.
38	CLK7	O, DIF	True clock output.
39	CLKb7	O, DIF	Complementary clock output.
40	OEb7	I, SE, PDT	Active low input for enabling output 7. 0 = enable output, 1 = disable output.
41	CLK8	O, DIF	True clock output.
42	CLKb8	O, DIF	Complementary clock output.
43	OEb8	I, SE, PDT	Active low input for enabling output 8. 0 = enable output, 1 = disable output.
44	GND	GND	Ground pin.
45	VDDCLK	PWR	Power supply for clock outputs.
46	CLK9	O, DIF	True clock output.
47	CLKb9	O, DIF	Complementary clock output.
48	OEb9	I, SE, PDT	Active low input for enabling output 9. 0 = enable output, 1 = disable output.
49	CLK10	O, DIF	True clock output.
50	CLKb10	O, DIF	Complementary clock output.
51	OEb10_SHFT_LDb	I, SE, PDT, None or PD	Active low input for enabling output 10 or SHFT_LDb pin for the Side-Band Interface. The function of this pin is controlled by the SBEN or SBI_ENQ pin. Refer to the Side-Band Interface (SBI) section for details. OE mode: 0 = enable output, 1 = disable output. Side-Band Mode with internal pull-down: 0 = Disable SBI shift register, 1 = Enable SBI shift register. A falling edge transfers SBI shift register contents to SBI output control register.
52	CLK11	O, DIF	True clock output.
53	CLKb11	O, DIF	Complementary clock output.
54	OEb11	I, SE, PDT	Active low input for enabling output 11. 0 = enable output, 1 = disable output.
55	CLK12	O, DIF	True clock output.
56	CLKb12	O, DIF	Complementary clock output.
57	OEb12	I, SE, PDT	Active low input for enabling output 12. 0 = enable output, 1 = disable output.
58	VDDCLK	PWR	Power supply for clock outputs.

Table 3. RC19020A072 Pin Descriptions (Cont.)

Pin Number	Pin Name	Type	Description
59	CLK13	O, DIF	True clock output.
60	CLKb13	O, DIF	Complementary clock output.
61	CLK14	O, DIF	True clock output.
62	CLKb14	O, DIF	Complementary clock output.
63	GND	GND	Ground pin.
64	CLK15	O, DIF	True clock output.
65	CLKb15	O, DIF	Complementary clock output.
66	CLK16	O, DIF	True clock output.
67	CLKb16	O, DIF	Complementary clock output.
68	VDDCLK	PWR	Power supply for clock outputs.
69	CLK17	O, DIF	True clock output.
70	CLKb17	O, DIF	Complementary clock output.
71	CLK18	O, DIF	True clock output.
72	CLKb18	O, DIF	Complementary clock output.
73	EPAD	GND	Connect EPAD to Ground.

1.5 RC19016 Pin Information

1.5.1 RC19016 Pin Assignments

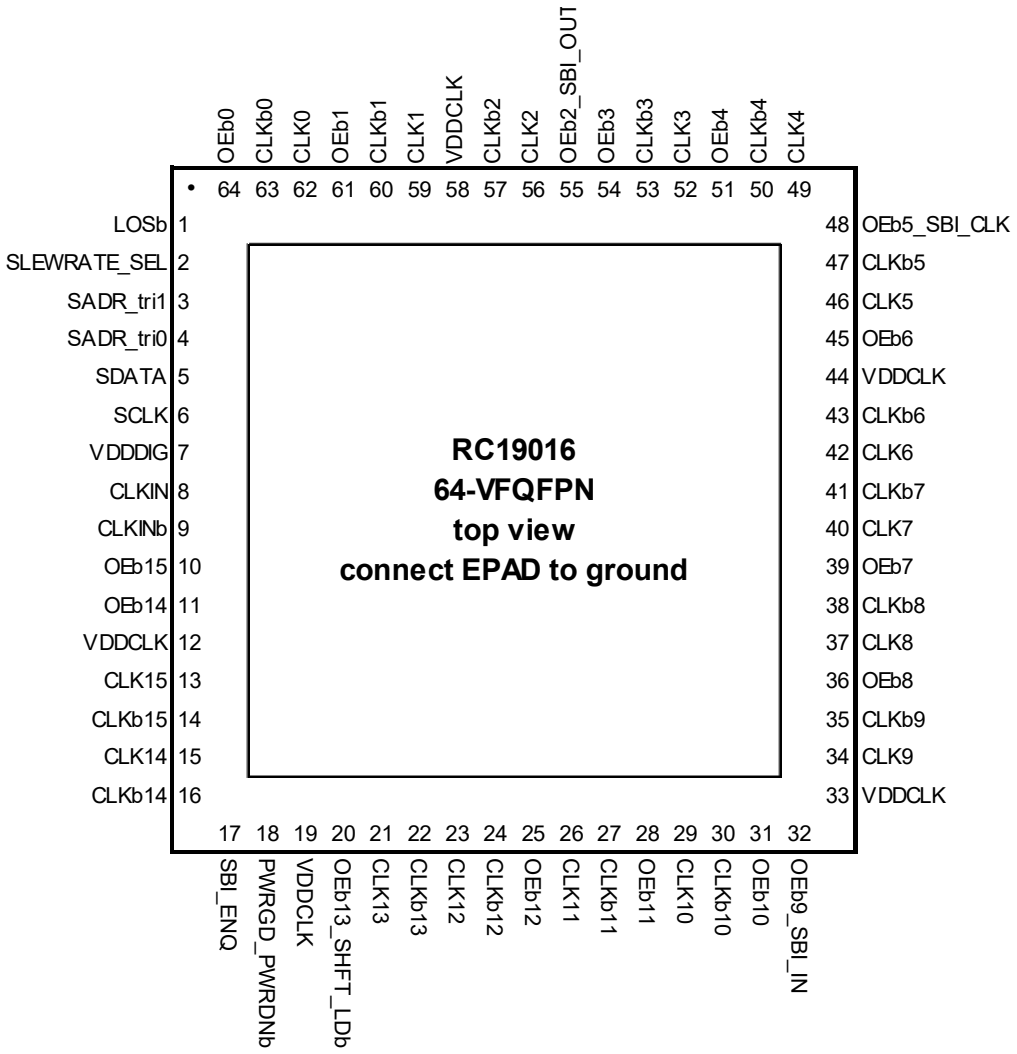

Figure 5. RC19016 64-VFQFPN – Top View

1.5.2 RC19016 Pin Descriptions

Table 4. RC19016 Pin Descriptions

Pin Number	Pin Name	Type	Description
1	LOSb	O, OD, PDT	Output indicating Loss of Input Signal. This pin is an open-drain output and requires an external pull-up resistor for proper functionality. A low output on this pin indicates a loss of signal on the input clock.
2	SLEWRATE_SEL	I, SE, PU, PDT	Input to select default slew rate of the outputs. 0 = Slow Slew Rate, 1 = Fast Slew Rate.
3	SADR_tri1	I, SE, PD, PU	SMBus address bit. This is a tri-level input that works in conjunction with other SADR pins, if present, to decode SMBus Addresses. See the SMBus Address Decode table and the tri-level input thresholds in the electrical tables.
4	SADR_tri0	I, SE, PD, PU	SMBus address bit. This is a tri-level input that works in conjunction with other SADR pins, if present, to decode SMBus Addresses. See the SMBus Address Decode table and the tri-level input thresholds in the electrical tables.
5	SDATA	I/O, SE, OD	Data pin for SMBus interface.

Table 4. RC19016 Pin Descriptions (Cont.)

Pin Number	Pin Name	Type	Description
6	SCLK	I, SE	Clock pin of SMBus interface.
7	VDDDIG	PWR	Digital power.
8	CLKIN	I, DIF	True clock input.
9	CLKINb	I, DIF	Complementary clock input.
10	OEb15	I, SE, PU, PDT	Active low input for enabling output 15. 0 = Enable output, 1 = Disable output.
11	OEb14	I, SE, PU, PDT	Active low input for enabling output 14. 0 = Enable output, 1 = Disable output.
12	VDDCLK	PWR	Clock power supply.
13	CLK15	O, DIF	True clock output.
14	CLKb15	O, DIF	Complementary clock output.
15	CLK14	O, DIF	True clock output.
16	CLKb14	O, DIF	Complementary clock output.
17	SBI_ENQ	I, SE, PD, PDT	Input that selects function of pins that are multiplexed between OE and SBI functionality. SMBus output enable bits and non-multiplexed OE pins remain functional when SBI is enabled. This pin must be strapped to its desired state. It cannot dynamically change. 0 = SBI is disabled. Multiplexed pins function as output enables. 1 = SBI is enabled. Multiplexed pins function as SBI control pins.
18	PWRGD_PWRDNb	I, SE, PU, PDT	Input notifies device to sample latched inputs and start up on first high assertion. Low enters Power Down Mode, subsequent high assertions exit Power Down Mode.
19	VDDCLK	PWR	Clock power supply.
20	OEb13_SHFT_LDb	I, SE, PDT, PU or PD	Active low input for enabling output 13 or SHFT_LDb pin for the Side-Band Interface. The function of this pin is controlled by the SBI_ENQ pin. For more information, see Side-Band Interface (SBI). OE mode with internal pull-up: 0 = Enable output, 1 = Disable output. Side-Band mode with internal pull-down: 0 = Disable SBI shift register, 1 = Enable SBI shift register. A falling edge transfers SBI shift register contents to SBI output control register.
21	CLK13	O, DIF	True clock output.
22	CLKb13	O, DIF	Complementary clock output.
23	CLK12	O, DIF	True clock output.
24	CLKb12	O, DIF	Complementary clock output.
25	OEb12	I, SE, PU, PDT	Active low input for enabling output 12. 0 = Enable output, 1 = Disable output.
26	CLK11	O, DIF	True clock output.
27	CLKb11	O, DIF	Complementary clock output.
28	OEb11	I, SE, PU, PDT	Active low input for enabling output 11. 0 = Enable output, 1 = Disable output.
29	CLK10	O, DIF	True clock output.
30	CLKb10	O, DIF	Complementary clock output.
31	OEb10	I, SE, PU, PDT	Active low input for enabling output 10. 0 = Enable output, 1 = Disable output.

Table 4. RC19016 Pin Descriptions (Cont.)

Pin Number	Pin Name	Type	Description
32	OEb9_SBI_IN	I, SE, PDT, PU or PD	Active low input for enabling output 9 or the data pin for the Side-Band Interface. The function is this pin is controlled by the SBI_ENQ pin. For more information, see Side-Band Interface (SBI). OE mode with internal pull-up: 0 = Enable output, 1 = Disable output. Side-Band mode with internal pull-down: SBI shift register data input pin
33	VDDCLK	PWR	Clock Power supply.
34	CLK9	O, DIF	True clock output.
35	CLKb9	O, DIF	Complementary clock output.
36	OEb8	I, SE, PU, PDT	Active low input for enabling output 8. 0 = Enable output, 1 = Disable output.
37	CLK8	O, DIF	True clock output.
38	CLKb8	O, DIF	Complementary clock output.
39	OEb7	I, SE, PU, PDT	Active low input for enabling output 7. 0 = Enable output, 1 = Disable output.
40	CLK7	O, DIF	True clock output.
41	CLKb7	O, DIF	Complementary clock output.
42	CLK6	O, DIF	True clock output.
43	CLKb6	O, DIF	Complementary clock output.
44	VDDCLK	PWR	Clock Power supply.
45	OEb6	I, SE, PU, PDT	Active low input for enabling output 6. 0 = Enable output, 1 = Disable output.
46	CLK5	O, DIF	True clock output.
47	CLKb5	O, DIF	Complementary clock output.
48	OEb5_SBI_CLK	I, SE, PDT, PU or PD	Active low input for enabling output 5 or the clock pin for the SBI shift register. The function is this pin is controlled by the SBI_ENQ pin. For more information, see Side-Band Interface (SBI). OE mode with internal pull-up: 0 = Enable output, 1 = Disable output. Side-Band mode with internal pull-down: Clocks data into the SBI on the rising edge.
49	CLK4	O, DIF	True clock output.
50	CLKb4	O, DIF	Complementary clock output.
51	OEb4	I, SE, PU, PDT	Active low input for enabling output 4 0 = Enable output, 1 = Disable output.
52	CLK3	O, DIF	True clock output.
53	CLKb3	O, DIF	Complementary clock output.
54	OEb3	I, SE, PU, PDT	Active low input for enabling output 3. 0 = Enable output, 1 = Disable output.
55	OEb2_SBI_OUT	I/O, SE, PU, or None	Active low input for enabling output 2 or the SBI shift register data output. The function is this pin is controlled by the SBI_ENQ. For more information, see Side-Band Interface (SBI). *Note*: This pin is NOT PDT. OE mode with internal pull-up: 0 = Enable output, 1 = Disable output. Side-Band mode: SBI shift register data output.
56	CLK2	O, DIF	True clock output.

Table 4. RC19016 Pin Descriptions (Cont.)

Pin Number	Pin Name	Type	Description
57	CLKb2	O, DIF	Complementary clock output.
58	VDDCLK	PWR	Clock Power supply.
59	CLK1	O, DIF	True clock output.
60	CLKb1	O, DIF	Complementary clock output.
61	OEb1	I, SE, PU, PDT	Active low input for enabling output 1. 0 = Enable output, 1 = Disable output.
62	CLK0	O, DIF	True clock output.
63	CLKb0	O, DIF	Complementary clock output.
64	OEb0	I, SE, PU, PDT	Active low input for enabling output 0. 0 = Enable output, 1 = Disable output.
65	EPAD	GND	Ground pin.

1.6 RC19013 Pin Information

1.6.1 RC19013 Pin Assignments

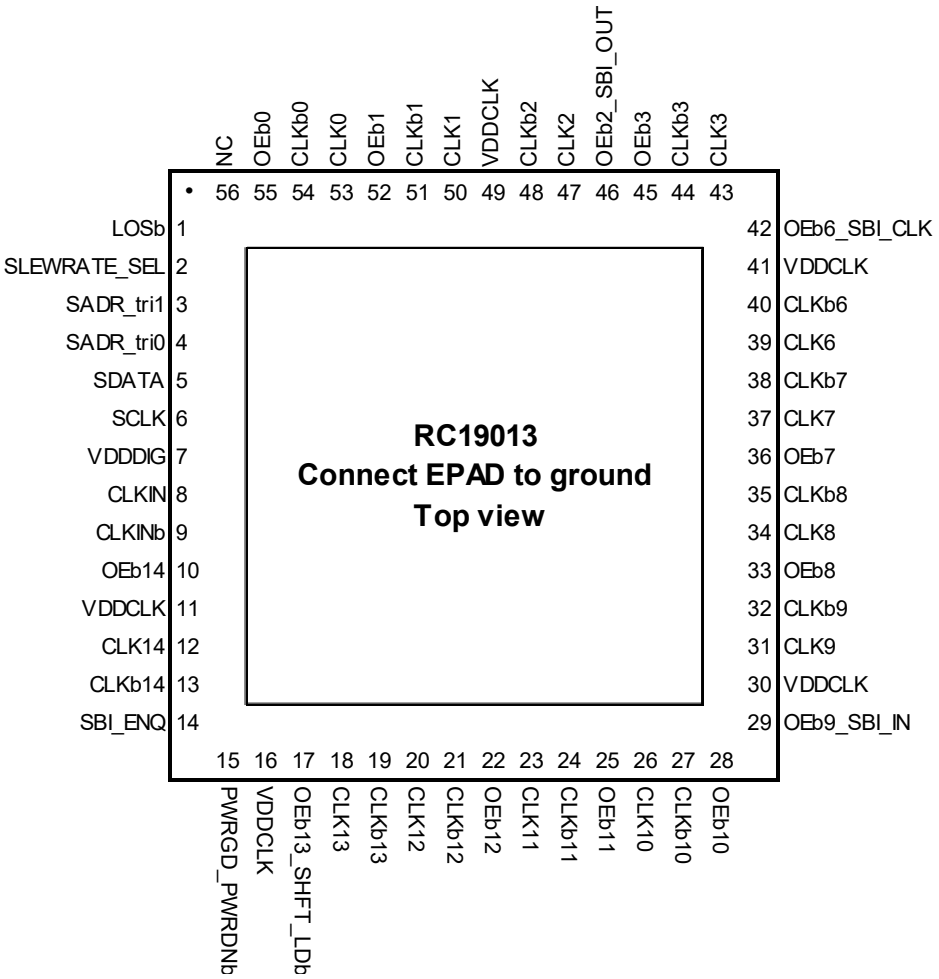

Figure 6. RC19013 56-VFQFPN – Top View

1.6.2 RC19013 Pin Descriptions

Table 5. RC19013 Pin Descriptions

Pin Number	Pin Name	Type	Description
1	LOSb	O, OD, PDT	Output indicating Loss of Input Signal. This pin is an open-drain output and requires an external pull-up resistor for proper functionality. A low output on this pin indicates a loss of signal on the input clock.
2	SLEWRATE_SEL	I, SE, PU, PDT	Input to select default slew rate of the outputs. 0 = Slow Slew Rate, 1 = Fast Slew Rate.
3	SADR_tri1	I, SE, PD, PU	SMBus address bit. This is a tri-level input that works in conjunction with other SADR pins, if present, to decode SMBus Addresses. See the SMBus Address Decode table and the tri-level input thresholds in the electrical tables.
4	SADR_tri0	I, SE, PD, PU	SMBus address bit. This is a tri-level input that works in conjunction with other SADR pins, if present, to decode SMBus Addresses. See the SMBus Address Decode table and the tri-level input thresholds in the electrical tables.
5	SDATA	I/O, SE, OD	Data pin for SMBus interface.
6	SCLK	I, SE	Clock pin of SMBus interface.
7	VDDDIG	PWR	Digital power.
8	CLKIN	I, DIF	True clock input.
9	CLKINb	I, DIF	Complementary clock input.
10	OEb14	I, SE, PU, PDT	Active low input for enabling output 14. 0 = Enable output, 1 = Disable output.
11	VDDCLK	PWR	Clock power supply.
12	CLK14	O, DIF	True clock output.
13	CLKb14	O, DIF	Complementary clock output.
14	SBI_ENQ	I, SE, PD, PDT	Input that selects function of pins that are multiplexed between OE and SBI functionality. SMBus output enable bits and non-multiplexed OE pins remain functional when SBI is enabled. This pin must be strapped to its desired state. It cannot dynamically change. 0 = SBI is disabled. Multiplexed pins function as output enables. 1 = SBI is enabled. Multiplexed pins function as SBI control pins.
15	PWRGD_PWRDNb	I, SE, PU, PDT	Input notifies device to sample latched inputs and start up on first high assertion. Low enters Power Down Mode, subsequent high assertions exit Power Down Mode.
16	VDDCLK	PWR	Clock Power supply.
17	OEb13_SHFT_LDb	I, SE, PDT, PU or PD	Active low input for enabling output 13 or SHFT_LDb pin for the Side-Band Interface. The function of this pin is controlled by the SBI_ENQ pin. For more information, see Side-Band Interface (SBI). OE mode with internal pull-up: 0 = Enable output, 1 = Disable output. Side-Band mode with internal pull-down: 0 = Disable SBI shift register, 1 = Enable SBI shift register. A falling edge transfers SBI shift register contents to SBI output control register.
18	CLK13	O, DIF	True clock output.
19	CLKb13	O, DIF	Complementary clock output.
20	CLK12	O, DIF	True clock output.
21	CLKb12	O, DIF	Complementary clock output.
22	OEb12	I, SE, PU, PDT	Active low input for enabling output 12. 0 = Enable output, 1 = Disable output.
23	CLK11	O, DIF	True clock output.
24	CLKb11	O, DIF	Complementary clock output.
25	OEb11	I, SE, PU, PDT	Active low input for enabling output 11. 0 = Enable output, 1 = Disable output.

Table 5. RC19013 Pin Descriptions (Cont.)

Pin Number	Pin Name	Type	Description
26	CLK10	O, DIF	True clock output.
27	CLKb10	O, DIF	Complementary clock output.
28	OEb10	I, SE, PU, PDT	Active low input for enabling output 10. 0 = Enable output, 1 = Disable output.
29	OEb9_SBI_IN	I, SE, PDT, PU or PD	Active low input for enabling output 9 or the data pin for the Side-Band Interface. The function is this pin is controlled by the SBI_ENQ pin. For more information, see Side-Band Interface (SBI). OE mode with internal pull-up: 0 = Enable output, 1 = Disable output. Side-Band mode with internal pull-down: SBI shift register data input pin
30	VDDCLK	PWR	Clock power supply.
31	CLK9	O, DIF	True clock output.
32	CLKb9	O, DIF	Complementary clock output.
33	OEb8	I, SE, PU, PDT	Active low input for enabling output 8. 0 = Enable output, 1 = Disable output.
34	CLK8	O, DIF	True clock output.
35	CLKb8	O, DIF	Complementary clock output.
36	OEb7	I, SE, PU, PDT	Active low input for enabling output 7. 0 = Enable output, 1 = Disable output.
37	CLK7	O, DIF	True clock output.
38	CLKb7	O, DIF	Complementary clock output.
39	CLK6	O, DIF	True clock output.
40	CLKb6	O, DIF	Complementary clock output.
41	VDDCLK	PWR	Clock power supply.
42	OEb6_SBI_CLK	I, SE, PDT, PU or PD	Active low input for enabling output 6 or the clock pin for the SBI shift register. The function is this pin is controlled by the SBI_ENQ pin. For more information, see Side-Band Interface (SBI). OE mode with internal pull-up: 0 = Enable output, 1 = Disable output. Side-Band mode with internal pull-down: Clocks data into the SBI shift register on the rising edge.
43	CLK3	O, DIF	True clock output.
44	CLKb3	O, DIF	Complementary clock output.
45	OEb3	I, SE, PU, PDT	Active low input for enabling output 3. 0 = Enable output, 1 = Disable output.
46	OEb2_SBI_OUT	I/O, SE, PU, or None	Active low input for enabling output 2 or the SBI shift register data output. The function is this pin is controlled by the SBI_ENQ pin. For more information, see Side-Band Interface (SBI). *Note*: This pin is NOT PDT. OE mode with internal pull-up: 0 = Enable output, 1 = Disable output. Side-Band mode: SBI shift register data output.
47	CLK2	O, DIF	True clock output.
48	CLKb2	O, DIF	Complementary clock output.
49	VDDCLK	PWR	Clock power supply.
50	CLK1	O, DIF	True clock output.

Table 5. RC19013 Pin Descriptions (Cont.)

Pin Number	Pin Name	Type	Description
51	CLKb1	O, DIF	Complementary clock output.
52	OEb1	I, SE, PU, PDT	Active low input for enabling output 1. 0 = Enable output, 1 = Disable output.
53	CLK0	O, DIF	True clock output.
54	CLKb0	O, DIF	Complementary clock output.
55	OEb0	I, SE, PU, PDT	Active low input for enabling output 0. 0 = Enable output, 1 = Disable output.
56	NC	NC	No connect.
57	EPAD	GND	Connect Epad to ground.

1.7 RC19008 Pin Information

1.7.1 RC19008 Pin Assignments

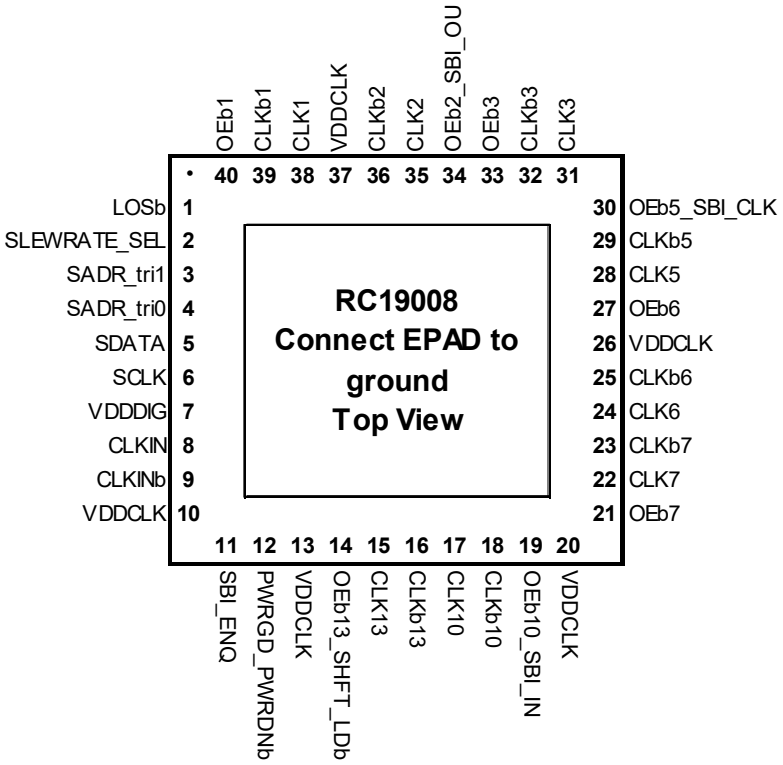

Figure 7. RC19008 40-VFQFPN – Top View

1.7.2 RC19008 Pin Descriptions

Table 6. RC19008 Pin Descriptions

Pin Number	Pin Name	Type	Description
1	LOSb	O, OD, PDT	Output indicating Loss of Input Signal. This pin is an open-drain output and requires an external pull-up resistor for proper functionality. A low output on this pin indicates a loss of signal on the input clock.
2	SLEWRATE_SEL	I, SE, PU, PDT	Input to select default slew rate of the outputs. 0 = Slow Slew Rate, 1 = Fast Slew Rate.

Table 6. RC19008 Pin Descriptions (Cont.)

Pin Number	Pin Name	Type	Description
3	SADR_tri1	I, SE, PD, PU	SMBus address bit. This is a tri-level input that works in conjunction with other SADR pins, if present, to decode SMBus Addresses. See the SMBus Address Decode table and tri-level input thresholds in the electrical tables.
4	SADR_tri0	I, SE, PD, PU	SMBus address bit. This is a tri-level input that works in conjunction with other SADR pins, if present, to decode SMBus Addresses. See the SMBus Address Decode table and tri-level input thresholds in the electrical tables.
5	SDATA	I/O, SE, OD	Data pin for SMBus interface.
6	SCLK	I, SE	Clock pin of SMBus interface.
7	VDDDIG	PWR	Digital power.
8	CLKIN	I, DIF	True clock input.
9	CLKINb	I, DIF	Complementary clock input.
10	VDDCLK	PWR	Clock Power supply.
11	SBI_ENQ	I, SE, PD, PDT	Input that selects function of pins that are multiplexed between OE and SBI functionality. SMBus output enable bits and non-multiplexed OE pins remain functional when SBI is enabled. This pin must be strapped to its desired state. It cannot dynamically change. 0 = SBI is disabled. Multiplexed pins function as output enables. 1 = SBI is enabled. Multiplexed pins function as SBI control pins.
12	PWRGD_PWRDNb	I, SE, PU, PDT	Input notifies device to sample latched inputs and start up on first high assertion. Low enters Power Down Mode, subsequent high assertions exit Power Down Mode.
13	VDDCLK	PWR	Clock power supply.
14	OEb13_SHFT_LDb	I, SE, PDT, PU or PD	Active low input for enabling output 13 or SHFT_LDb pin for the Side-Band Interface. The function of this pin is controlled by the SBI_ENQ pin. For more information, see Side-Band Interface (SBI). OE mode with internal pull-up: 0 = Enable output, 1 = Disable output. Side-Band mode with internal pull-down: 0 = Disable SBI shift register, 1 = Enable SBI shift register. A falling edge transfers SBI shift register contents to SBI output control register.
15	CLK13	O, DIF	True clock output.
16	CLKb13	O, DIF	Complementary clock output.
17	CLK10	O, DIF	True clock output.
18	CLKb10	O, DIF	Complementary clock output.
19	OEb10_SBI_IN	I, SE, PDT, PU or PD	Active low input for enabling output 10 or the data pin for the Side-Band Interface. The function of this pin is controlled by the SBI_ENQ pin. For more information, see Side-Band Interface (SBI). OE mode with internal pull-up: 0 = Enable output, 1 = Disable output. Side-Band mode with internal pull-down: SBI shift-register data input.
20	VDDCLK	PWR	Clock power supply.
21	OEb7	I, SE, PU, PDT	Active low input for enabling output 7. 0 = Enable output, 1 = Disable output.
22	CLK7	O, DIF	True clock output.
23	CLKb7	O, DIF	Complementary clock output.
24	CLK6	O, DIF	True clock output.
25	CLKb6	O, DIF	Complementary clock output.
26	VDDCLK	PWR	Clock Power supply.

Table 6. RC19008 Pin Descriptions (Cont.)

Pin Number	Pin Name	Type	Description
27	OEb6	I, SE, PU, PDT	Active low input for enabling output 6. 0 = Enable output, 1 = Disable output.
28	CLK5	O, DIF	True clock output.
29	CLKb5	O, DIF	Complementary clock output.
30	OEb5_SBI_CLK	I, SE, PDT, PU or PD	Active low input for enabling output 5 or the clock pin for the SBI shift register. The function is this pin is controlled by the SBI_ENQ pin. For more information, see Side-Band Interface (SBI). OE mode with internal pull-up: 0 = Enable output, 1 = Disable output. Side-Band mode with internal pull-down: Clocks data into the SBI on the rising edge.
31	CLK3	O, DIF	True clock output.
32	CLKb3	O, DIF	Complementary clock output.
33	OEb3	I, SE, PU, PDT	Active low input for enabling output 3. 0 = Enable output, 1 = Disable output.
34	OEb2_SBI_OUT	I/O, SE, PU, or None	Active low input for enabling output 2 or the SBI shift register data output. The function is this pin is controlled by the SBI_ENQ pin. For more information, see Side-Band Interface (SBI). *Note*: This pin is NOT PDT. OE mode with internal pull-up: 0 = Enable output, 1 = Disable output. Side-Band mode: SBI shift register data output.
35	CLK2	O, DIF	True clock output.
36	CLKb2	O, DIF	Complementary clock output.
37	VDDCLK	PWR	Clock power supply.
38	CLK1	O, DIF	True clock output.
39	CLKb1	O, DIF	Complementary clock output.
40	OEb1	I, SE, PU, PDT	Active low input for enabling output 1. 0 = Enable output, 1 = Disable output.
41	EPAD	GND	Connect Epad to ground.

1.8 RC19004 Pin Information

1.8.1 RC19004 Pin Assignments

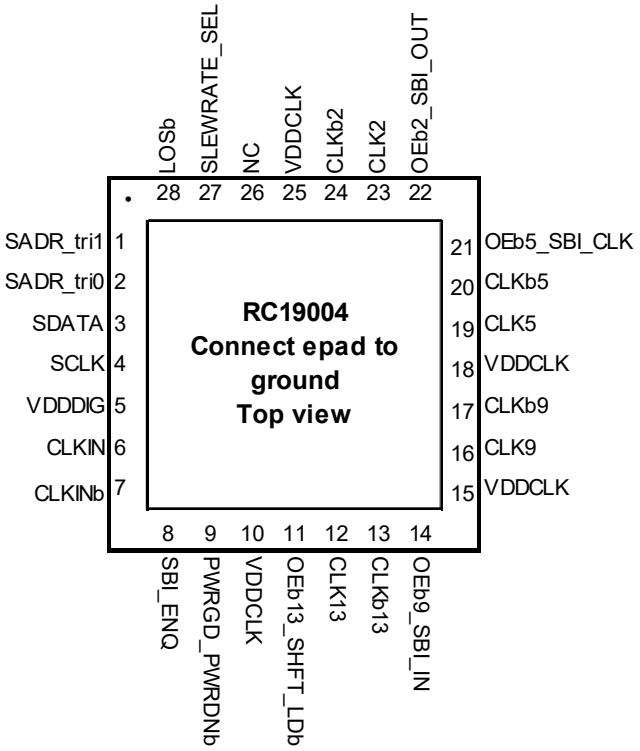

Figure 8. RC19004 28-VFQFPN – Top View

1.8.2 RC19004 Pin Descriptions

Table 7. RC19004 Pin Descriptions

Pin Number	Pin Name	Type	Description
1	SADR_tri1	I, SE, PD, PU	SMBus address bit. This is a tri-level input that works in conjunction with other SADR pins, if present, to decode SMBus Addresses. See the SMBus Address Decode table and the tri-level input thresholds in the electrical tables.
2	SADR_tri0	I, SE, PD, PU	SMBus address bit. This is a tri-level input that works in conjunction with other SADR pins, if present, to decode SMBus Addresses. See the SMBus Address Decode table and the tri-level input thresholds in the electrical tables.
3	SDATA	I/O, SE, OD	Data pin for SMBus interface.
4	SCLK	I, SE	Clock pin of SMBus interface.
5	VDDDIG	PWR	Digital power.
6	CLKIN	I, DIF	True clock input.
7	CLKINb	I, DIF	Complementary clock input.
8	SBI_ENQ	I, SE, PD, PDT	Input that selects function of pins that are multiplexed between OE and SBI functionality. SMBus output enable bits and non-multiplexed OE pins remain functional when SBI is enabled. This pin must be strapped to its desired state. It cannot dynamically change. 0 = SBI is disabled. Multiplexed pins function as output enables. 1 = SBI is enabled. Multiplexed pins function as SBI control pins.
9	PWRGD_PWRDNb	I, SE, PU, PDT	Input notifies device to sample latched inputs and start up on first high assertion. Low enters Power Down Mode, subsequent high assertions exit Power Down Mode.
10	VDDCLK	PWR	Clock power supply.

Table 7. RC19004 Pin Descriptions (Cont.)

Pin Number	Pin Name	Type	Description
11	OEb13_SHFT_LDb	I, SE, PU, or PD	Active low input for enabling output 13 or SHFT_LDb pin for the Side-Band Interface. The function of this pin is controlled by the SBI_ENQ pin. For more information, see Side-Band Interface (SBI). OE mode with internal pull-up: 0 = Enable output, 1 = Disable output. Side-Band mode with internal pull-down: 0 = Disable SBI shift register, 1 = Enable SBI shift register. A falling edge transfers SBI shift register contents to SBI output control register.
12	CLK13	O, DIF	True clock output.
13	CLKb13	O, DIF	Complementary clock output.
14	OEb9_SBI_IN	I, SE, PDT, PU or PD	Active low input for enabling output 9 or the data pin for the Side-Band Interface. The function is this pin is controlled by the SBI_ENQ pin. For more information, see Side-Band Interface (SBI). OE mode with internal pull-up: 0 = Enable output, 1 = Disable output. Side-Band mode with internal pull-down: SBI shift register data input pin
15	VDDCLK	PWR	Clock power supply.
16	CLK9	O, DIF	True clock output.
17	CLKb9	O, DIF	Complementary clock output.
18	VDDCLK	PWR	Clock power supply.
19	CLK5	O, DIF	True clock output.
20	CLKb5	O, DIF	Complementary clock output.
21	OEb5_SBI_CLK	I, SE, PDT, PU or PD	Active low input for enabling output 5 or the clock pin for the SBI shift register. The function is this pin is controlled by the SBI_ENQ pin. For more information, see Side-Band Interface (SBI). OE mode with internal pull-up: 0 = Enable output, 1 = Disable output. Side-Band mode with internal pull-down: Clocks data into the SBI on the rising edge.
22	OEb2_SBI_OUT	I/O, SE, PU, or None	Active low input for enabling output 2 or the SBI shift register data output. The function is this pin is controlled by the SBI_ENQ pin. For more information, see Side-Band Interface (SBI). *Note*: This pin is NOT PDT. OE mode with internal pull-up: 0 = Enable output, 1 = Disable output. Side-Band mode: SBI shift register data output.
23	CLK2	O, DIF	True clock output.
24	CLKb2	O, DIF	Complementary clock output.
25	VDDCLK	PWR	Clock power supply.
26	NC	NC	No connect.
27	SLEWRATE_SEL	I, SE, PU, PDT	Input to select default slew rate of the outputs. 0 = Slow Slew Rate, 1 = Fast Slew Rate.
28	LOSb	O, OD, PDT	Output indicating Loss of Input Signal. This pin is an open drain output and requires an external pull up resistor for proper functionality. A low output on this pin indicates a loss of signal on the input clock.
29	EPAD	GND	Connect to ground.

1.9 RC19002 Pin Information

1.9.1 RC19002 Pin Assignments

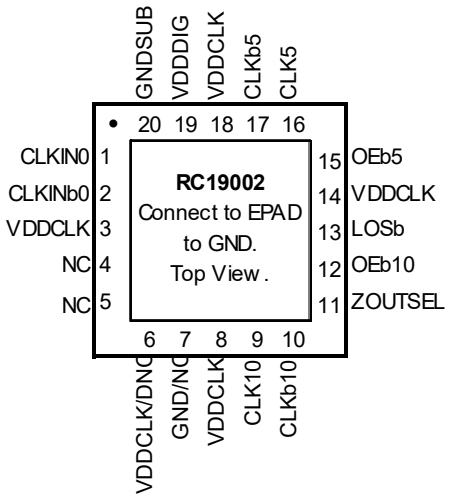

Figure 9. RC19002 20-VFQFPN – Top View

1.9.2 RC19002 Pin Descriptions

Table 8. RC19002 Pin Descriptions

Pin Number	Pin Name	Type	Description
1	CLKIN0	I, DIF, PDT	True clock input.
2	CLKINb0	I, DIF, PDT	Complementary clock input.
3	VDDCLK	PWR	Clock power supply.
4	NC	NC	No connect
5	NC	NC	No connect
6	VDDCLK/DNC	PWR/DNC	When plugging the RC19002 into the RC19202 footprint, the pin may be left connected to VDD. New RC19002 designs can connect this pin to VDD or leave it unconnected. If leaving the pin unconnected, do not connect any traces – there must be no stubs.
7	GND/DNC	GND/DNC	The RC19202 clock multiplexer footprint may have this pin pulled low via an external resistor. When plugging the RC19002 into the RC19202 footprint, this pin must be left floating by removing any external pull-down resistor and any board trace must be removed. New RC19002 designs can leave this pin unconnected or connect it directly to GND. If leaving the pin unconnected, do not connect any traces, there must be no stubs.
8	VDDCLK	PWR	Clock power supply.
9	CLK10	O, DIF	True clock output.
10	CLKb10	O, DIF	Complementary clock output.
11	ZOUTSEL	I, SE, PD	Input to select differential output impedance. 0 = 85ohm, 1 = 100ohm
12	OEb10	I, SE, PU, PDT	Active low input for enabling output 10. 1 = disable output, 0 = enable output.
13	LOSb	O, OD, PDT	Output indicating Loss of Input Signal. This pin is an open drain output and requires an external pull up resistor for proper functionality. A low output on this pin indicates a loss of signal on the input clock.
14	VDDCLK	PWR	Clock power supply.
15	OEb5	I, SE, PU, PDT	Active low input for enabling output 5. 1 = disable output, 0 = enable output.

Table 8. RC19002 Pin Descriptions (Cont.)

Pin Number	Pin Name	Type	Description
16	CLK5	O, DIF	True clock output.
17	CLKb5	O, DIF	Complementary clock output.
18	VDDCLK	PWR	Clock power supply.
19	VDDDIG	PWR	Digital power.
20	GNDSUB	GND	Ground pin for substrate.
21	EPAD	GND	Connect to ground.

2. Specifications

2.1 Absolute Maximum Ratings

Caution: Do not operate at or near the maximum ratings listed for extended periods of time. Exposure to such conditions can adversely impact product reliability and result in failures not covered by warranty.

Table 9. Absolute Maximum Ratings

Symbol	Parameter	Condition	Minimum	Maximum	Unit
V_{DDx}	Supply Voltage with respect to Ground	Any VDD pin	-0.5	3.9	V
V_{IN}	Input Voltage	[1]	-0.5	3.9	V
V_{IN}	Input Voltage	[2]	-0.5	V_{DDx} + 0.3	V
I_{IN}	Input Current	All SE inputs and CLKIN [2]	-	±50	mA
I_{OUT}	Output Current – Continuous	CLK	-	30	mA
		SDATA, SBI_OUT	-	25	mA
	Output Current – Surge	CLK	-	60	mA
		SDATA, SBI_OUT	-	50	mA
T_J	Maximum Junction Temperature	-	-	150	°C
T_S	Storage Temperature	Storage Temperature	-65	150	°C
ESD	Human Body Model	JESD22-A114 (JS-001) Classification	-	2000	V
	Charged Device Model	JESD22-C101 Classification	-	500	V

1. Pins designated Power Down Tolerant (PDT) in the pin description tables.
2. Pins not designated Power Down Tolerant (PDT) in the pin description tables.

2.2 Recommended Operating Conditions

Table 10. Recommended Operating Conditions

Symbol	Parameter	Condition	Minimum	Typical	Maximum	Unit
T_J	Maximum Junction Temperature	-	-	-	125	°C
T_A	Ambient Operating Temperature	-	-40	25	105	°C
V_{DDx}	Supply Voltage with respect to Ground	Any VDD pin, 3.3V ±10% supply.	2.97	3.3	3.63	V
t_{PU}	Power-up time for all VDDs to reach minimum specified voltage (power ramps must be monotonic)	Power-up time for all VDDs to reach minimum specified voltage (power ramps must be monotonic).	0.05	-	5	ms

2.3 Thermal Specifications

Table 11. Thermal Specifications

Package [1]	Symbol	Condition	Typical Value (°C/W)
8 × 8 mm 100-VFQFPN (5.1 × 5.1 mm ePad)	θ_{Jc}	Junction to Case	8.6
	θ_{Jb}	Junction to Board	0.6
	θ_{JA0}	Junction to Ambient, still air	21.4
	θ_{JA1}	Junction to Ambient, 1 m/s air flow	17.9
	θ_{JA3}	Junction to Ambient, 3 m/s air flow	15.8
	θ_{JA5}	Junction to Ambient, 5 m/s air flow	15.3

Table 11. Thermal Specifications (Cont.)

Package [1]	Symbol	Condition	Typical Value (°C/W)
6 × 6 mm 80-VFQFPN (2.8 × 2.8 mm ePad)	θ_{Jc}	Junction to Case	44
	θ_{Jb}	Junction to Board	2
	θ_{JA0}	Junction to Ambient, still air	33
	θ_{JA1}	Junction to Ambient, 1 m/s air flow	29
	θ_{JA3}	Junction to Ambient, 3 m/s air flow	28
	θ_{JA5}	Junction to Ambient, 5 m/s air flow	27
10 × 10 mm 72-VFQFPN (5.95 × 5.95 mm ePad)	θ_{Jc}	Junction to Case	16.9
	θ_{Jb}	Junction to Board	2.7
	θ_{JA0}	Junction to Ambient, still air	26.4
	θ_{JA1}	Junction to Ambient, 1 m/s air flow	22.7
	θ_{JA3}	Junction to Ambient, 3 m/s air flow	20.6
	θ_{JA5}	Junction to Ambient, 5 m/s air flow	19.8
9 × 9 mm 64-VFQFPN (5.2 × 5.2 mm ePad)	θ_{Jc}	Junction to Case	24.6
	θ_{Jb}	Junction to Board	2.7
	θ_{JA0}	Junction to Ambient, still air	26.8
	θ_{JA1}	Junction to Ambient, 1 m/s air flow	22.9
	θ_{JA3}	Junction to Ambient, 3 m/s air flow	21.5
	θ_{JA5}	Junction to Ambient, 5 m/s air flow	20.7
7 × 7 mm 56-VFQFPN (5.3 × 5.3 mm ePad)	θ_{Jc}	Junction to Case	26.6
	θ_{Jb}	Junction to Base	3.4
	θ_{JA0}	Junction to Ambient, still air	26.9
	θ_{JA1}	Junction to Ambient, 1 m/s air flow	23.4
	θ_{JA3}	Junction to Ambient, 3 m/s air flow	21.9
	θ_{JA5}	Junction to Ambient, 5 m/s air flow	21.0
5 × 5 mm 40-VFQFPN (3.3 × 3.3 mm ePad)	θ_{Jc}	Junction to Case	37.0
	θ_{Jb}	Junction to Base	4.8
	θ_{JA0}	Junction to Ambient, still air	33.1
	θ_{JA1}	Junction to Ambient, 1 m/s air flow	29.6
	θ_{JA3}	Junction to Ambient, 3 m/s air flow	28.0
	θ_{JA5}	Junction to Ambient, 5 m/s air flow	27.1
4 × 4 mm 28-VFQFPN (2.6 × 2.6 mm ePad)	θ_{Jc}	Junction to Case	45.3
	θ_{Jb}	Junction to Board	2.2
	θ_{JA0}	Junction to Ambient, still air	36.3
	θ_{JA1}	Junction to Ambient, 1 m/s air flow	32.7
	θ_{JA3}	Junction to Ambient, 3 m/s air flow	31.0
	θ_{JA5}	Junction to Ambient, 5 m/s air flow	30.0

Table 11. Thermal Specifications (Cont.)

Package [1]	Symbol	Condition	Typical Value (°C/W)
3 × 3 mm 20-VFQFPN (1.65 × 1.65 mm Epad)	θ_{Jc}	Junction to Case	96.3
	θ_{Jb}	Junction to Board	20.4
	θ_{JA0}	Junction to Ambient, still air	54.8
	θ_{JA1}	Junction to Ambient, 1 m/s air flow	51.1
	θ_{JA3}	Junction to Ambient, 3 m/s air flow	47.7
	θ_{JA5}	Junction to Ambient, 5 m/s air flow	46.2

1. ePad soldered to board.

2.4 Electrical Specifications

2.4.1 Phase Jitter

Table 12. PCIe Refclk Phase Jitter - Normal Conditions [1][2][3]

Symbol	Parameter	Condition	Typical	Maximum	Specification Limit	Unit
$t_{jphPCIeG1-CC}$	Additive PCIe Phase Jitter (Common Clocked Architecture)	PCIe Gen1 (2.5 GT/s)	528	623	86,000	fs p-p
$t_{jphPCIeG2-CC}$		PCIe Gen2 Hi Band (5.0 GT/s)	44	53	3,100	fs RMS
		PCIe Gen2 Lo Band (5.0 GT/s)	16	19	3,000	
$t_{jphPCIeG3-CC}$		PCIe Gen3 (8.0 GT/s)	15	18	1,000	
$t_{jphPCIeG4-CC}$		PCIe Gen4 (16.0 GT/s) [4] [5]	15	18	500	
$t_{jphPCIeG5-CC}$		PCIe Gen5 (32.0 GT/s) [4] [6]	5.8	7	150	
$t_{jphPCIeG6-CC}$		PCIe Gen6 (64.0 GT/s) [4] [7]	3.4	4.1	100	
$t_{jphPCIeG7-CC}$		PCIe Gen7 (128.0 GT/s) [4] [8]	2.4	2.9	67	
$t_{jphPCIeG2-IR}$	Additive PCIe Phase Jitter (IR Architectures)	PCIe Gen2 (5.0 GT/s)	39	47	[9]	fs RMS
$t_{jphPCIeG3-IR}$		PCIe Gen3 (8.0 GT/s)	15	18		
$t_{jphPCIeG4-IR}$		PCIe Gen4 (16.0 GT/s)	15	18.5		
$t_{jphPCIeG5-IR}$		PCIe Gen5 (32.0 GT/s)	4.3	5.1		
$t_{jphPCIeG6-IR}$		PCIe Gen6 (64.0 GT/s)	3.1	3.7		
$t_{jphPCIeG7-IR}$		PCIe Gen7 (128.0 GT/s)	2.2	2.6		

1. The Refclk jitter is measured after applying the filter functions found in the *PCI Express Base Specification 7.0, Revision 0.7*. For the exact measurement setup, see Test Loads. The worst case results for each data rate are summarized in this table. Equipment noise is removed from all measurements.
2. Jitter measurements should be made with a capture of at least 100,000 clock cycles captured by a real-time oscilloscope (RTO) with a sample rate of 20GS/s or greater. Broadband oscilloscope noise must be minimized in the measurement. The measured PP jitter is used (no extrapolation) for RTO measurements. Alternately, jitter measurements can be used with a Phase Noise Analyzer (PNA) extending (flat) and integrating and folding the frequency content up to an offset from the carrier frequency of at least 200MHz (at 300MHz absolute frequency) below the Nyquist frequency. For PNA measurements for the 2.5GT/s data rate, the RMS jitter is converted to peak-to-peak jitter using a multiplication factor of 8.83.
3. Differential input swing ≥ 1600mV and input slew rate ≥ 3.5V/ns. The rms sum of the source jitter and the additive jitter (arithmetic sum for PCIe Gen1) must be less than the jitter specification listed.
4. SSC spurs from the fundamental and harmonics are removed up to a cutoff frequency of 2MHz taking care to minimize removal of any non-SSC content.
5. Note that 0.7ps RMS is to be used in channel simulations to account for additional noise in a real system.
6. Note that 0.25ps RMS is to be used in channel simulations to account for additional noise in a real system.
7. Note that 0.15ps RMS is to be used in channel simulations to account for additional noise in a real system.
8. Note that 0.10ps RMS is to be used in channel simulations to account for additional noise in a real system.

9. The *PCI Express Base Specification 7.0* provides the filters necessary to calculate SRIS jitter values; it does not provide specification limits, therefore, the reference to this footnote in the Limit column. SRIS values are informative only. A common practice is to split the common clock budget in half. For 16GT/s data rates and above, the user must choose whether to use the output jitter specification, or the input jitter specification, which includes an allocation for the jitter added by the channel. Using 32GT/s, the Refclk jitter budget is 150fs RMS. One half of the Refclk jitter budget is 106fs RMS. At the clock input, the system must deliver 250fs RMS. One half of this value is 177fs RMS. If the clock is placed next to the PCIe device in an SRIS system, the channel is very short and the user can choose to use this more relaxed value as the jitter limit.

Table 13. PCIe Refclk Phase Jitter - Degraded Conditions [1][2][3]

Symbol	Parameter	Condition	Typical	Maximum	Specification Limit	Unit
$t_{jphPCIeG1-CC}$	Additive PCIe Phase Jitter (Common Clocked Architecture)	PCIe Gen1 (2.5 GT/s)	466	697	86,000	fs p-p
$t_{jphPCIeG2-CC}$		PCIe Gen2 Hi Band (5.0 GT/s)	55	76	3,100	fs RMS
		PCIe Gen2 Lo Band (5.0 GT/s)	20	27	3,000	
$t_{jphPCIeG3-CC}$		PCIe Gen3 (8.0 GT/s)	19	26	1,000	
$t_{jphPCIeG4-CC}$		PCIe Gen4 (16.0 GT/s) [4] [5]	19	26	500	
$t_{jphPCIeG5-CC}$		PCIe Gen5 (32.0 GT/s) [4] [6]	7.3	10	150	
$t_{jphPCIeG6-CC}$		PCIe Gen6 (64.0 GT/s) [4] [7]	4.4	6.0	100	
$t_{jphPCIeG7-CC}$		PCIe Gen7 (128.0 GT/s) [4] [8]	3.1	4.2	67	
$t_{jphPCIeG2-IR}$	Additive PCIe Phase Jitter (IR Architectures)	PCIe Gen2 (5.0 GT/s)	49	67	[9]	fs RMS
$t_{jphPCIeG3-IR}$		PCIe Gen3 (8.0 GT/s)	19	26		
$t_{jphPCIeG4-IR}$		PCIe Gen4 (16.0 GT/s)	14	17		
$t_{jphPCIeG5-IR}$		PCIe Gen5 (32.0 GT/s)	5.4	7.4		
$t_{jphPCIeG6-IR}$		PCIe Gen6 (64.0 GT/s)	3.9	5.4		
$t_{jphPCIeG7-IR}$		PCIe Gen7 (128.0 GT/s)	2.8	3.8		

1. The Refclk jitter is measured after applying the filter functions found in the *PCI Express Base Specification 7.0, Revision 0.7*. For the exact measurement setup, see Test Loads. The worst case results for each data rate are summarized in this table. Equipment noise is removed from all measurements.
2. Jitter measurements should be made with a capture of at least 100,000 clock cycles captured by a real-time oscilloscope (RTO) with a sample rate of 20GS/s or greater. Broadband oscilloscope noise must be minimized in the measurement. The measured PP jitter is used (no extrapolation) for RTO measurements. Alternately, jitter measurements can be used with a Phase Noise Analyzer (PNA) extending (flat) and integrating and folding the frequency content up to an offset from the carrier frequency of at least 200MHz (at 300MHz absolute frequency) below the Nyquist frequency. For PNA measurements for the 2.5GT/s data rate, the RMS jitter is converted to peak-to-peak jitter using a multiplication factor of 8.83.
3. Differential input swing ≥ 800mV and input slew rate ≥ 1.5V/ns. The rms sum of the source jitter and the additive jitter (arithmetic sum for PCIe Gen1) must be less than the jitter specification listed.
4. SSC spurs from the fundamental and harmonics are removed up to a cutoff frequency of 2MHz taking care to minimize removal of any non-SSC content.
5. Note that 0.7ps RMS is to be used in channel simulations to account for additional noise in a real system.
6. Note that 0.25ps RMS is to be used in channel simulations to account for additional noise in a real system.
7. Note that 0.15ps RMS is to be used in channel simulations to account for additional noise in a real system.
8. Note that 0.10ps RMS is to be used in channel simulations to account for additional noise in a real system.
9. The *PCI Express Base Specification 7.0* provides the filters necessary to calculate SRIS jitter values; it does not provide specification limits, therefore, the reference to this footnote in the Limit column. SRIS values are informative only. A common practice is to split the common clock budget in half. For 16GT/s data rates and above, the user must choose whether to use the output jitter specification, or the input jitter specification, which includes an allocation for the jitter added by the channel. Using 32GT/s, the Refclk jitter budget is 150fs RMS. One half of the Refclk jitter budget is 106fs RMS. At the clock input, the system must deliver 250fs RMS. One half of this value is 177fs RMS. If the clock is placed next to the PCIe device in an SRIS system, the channel is very short and the user can choose to use this more relaxed value as the jitter limit.

Table 14. Non-PCIe Refclk Phase Jitter [1][2][3]

Symbol	Parameter	Condition	Typical	Maximum	Specification Limit	Unit
$t_{jphDB2000Q}$	Additive Phase Jitter - normal conditions[4]	100MHz, Intel-supplied filter [3]	10	12	80 [5]	fs RMS
$t_{jph12k-20M}$		156.25MHz (12kHz to 20MHz)	30	36	N/A	
$t_{jphDB2000Q}$	Additive Phase Jitter - degraded conditions [6]	100MHz, Intel-supplied filter [3]	12	16	80 [5]	
$t_{jph12k-20M}$		156.25MHz (12kHz to 20MHz)	39	48	N/A	

1. See Test Loads for test configuration.
2. SMA100B used as signal source.
3. The RC19xxx devices meet all legacy QPI/UPI specifications by meeting the PCIe and DB2000Q specifications listed in this document.
4. Differential input swing = 1,600mV and input slew rate = 3.5V/ns.
5. The rms sum of the source jitter and the additive jitter (arithmetic sum for PCIe Gen1) must be less than the jitter specification listed.
6. Differential input swing = 800mV and input slew rate = 1.5V/ns.

2.4.2 Output Frequencies, Startup Time, and LOS Timing

Table 15. Output Frequencies, Startup Time, and LOS Timing

Symbol	Parameter	Condition	Minimum	Typical	Maximum	Unit
f_{OP}	Operating Frequency	Automatic Clock Parking (ACP) Circuit disabled	1	-	400	MHz
		Automatic Clock Parking (ACP) Circuit enabled	25	-	400	
$t_{STARTUP}$	Start-up Time	[1]	-	1.2	3	ms
$t_{STARTUP}$	Start-up Time	[2]	-	0.3	1	ms
t_{LATOEb}	OEb latency	OEb assertion/de-assertion CLK start/stop latency. Input clock must be running.	4	5	10	clks
$t_{LOSAssert}$	LOS Assert Time	Time from disappearance of input clock to LOS assert. [3][4]	-	123	200	ns
$t_{LOSDeassert}$	LOS De-assert Time	Time from appearance of input clock to LOS de-assert. [3][5]	-	6	9	clks

1. Measured from when all power supplies have reached > 90% of nominal voltage to the first stable clock edge on the output. PWRGD_PWRDNb tied to VDD in this case.
2. VDD stable, measured from de-assertion of PWRGD_PWRDNb.
3. The clock detect circuit does not qualify the accuracy of the input clock. The first input clock must appear to release the power on reset and enable the LOS circuit at power up.
4. PWRGD_PWRDNb high. The Automatic Clock Parking (ACP) circuit - if enabled - will park the outputs in a low/low state within this time. See Byte4, bit 4 LOSb_ACP_ENABLE.
5. PWRGD_PWRDNb high. The device will drive the outputs to a high/low state within this time and then begin clocking the outputs.

2.4.3 RC1902xA CLK AC/DC Output Characteristics

The tables in this section apply to the RC19024, RC19020 and RC19020A072.

Table 16. RC1902xA 85-ohm CLK AC/DC Characteristics - Source-Terminated 100MHz PCIe [1]

Symbol	Parameter	Conditions	Minimum	Typical	Maximum	Specification Limit [2]	Unit
V_{MAX}	Absolute Max Voltage Includes 300mV of Overshoot (Vovs) [3][4]	Across all settings in this table at 100MHz.	-	-	1092	1150	mV
V_{MIN}	Absolute Min Voltage Includes -300mV of Undershoot (Vuds) [3][5]		-166	-	-	-300	
V_{HIGH}	Voltage High [3]	V_{HIGH} set to 800mV.	678	819	994	-	
V_{LOW}	Voltage Low [3]		-88	29	146	-	
V_{CROSS}	Crossing Voltage (abs) [3][6][7]	V_{HIGH} set to 800mV, scope averaging off.	278	403	543	250 to 550	
ΔV_{CROSS}	Crossing Voltage (var) [3][6][8]		-	1	97	140	
dv/dt	Slew Rate [9][10]	V_{HIGH} set to 800mV, Fast slew rate, scope averaging on.	2.0	2.8	4.0	2 to 5	V/ns
		V_{HIGH} set to 800mV, Slow slew rate, scope averaging on.	1.6	2.2	3.3	1.5 to 3.5	
$\Delta T_{R/F}$	Rise/Fall Matching [3] [11]	V_{HIGH} set to 800mV. Fast slew rate.	-	4	19	20	%
		V_{HIGH} set to 800mV. Slow slew rate.	-	6	24	N/A	
V_{HIGH}	Voltage High [3]	V_{HIGH} set to 900mV.	719	903	1090	-	mV
V_{LOW}	Voltage Low [3]		-115	37	163	-	
V_{CROSS}	Crossing Voltage (abs) [3] [6][7]	V_{HIGH} set to 900mV, scope averaging off.	289	445	582	250 to 600	
ΔV_{CROSS}	Crossing Voltage (var) [3] [6][8]		-	1	105	140	
dv/dt	Slew Rate [9][10]	V_{HIGH} set to 900mV, Fast slew rate, scope averaging on.	2.1	2.9	4.3	2 to 5	V/ns
		V_{HIGH} set to 900mV, Slow slew rate, scope averaging on.	1.7	2.3	3.5	1.5 to 3.5	
$\Delta T_{R/F}$	Rise/Fall Matching [3][11]	V_{HIGH} set to 900mV. Fast slew rate.	-	5	18	20	%
		V_{HIGH} set to 900mV. Slow slew rate.	-	6	26	N/A	
t_{DC}	Output Duty Cycle [9]	V_T = 0V differential. 50% duty cycle input.	49	49.9	51	45 to 55	%

1. Standard high impedance load with C_L = 2pF. See Test Loads.
2. The specification limits are taken from either the *PCIe Base Specification, Revision 7.0* or from relevant x86 processor specifications, whichever is more stringent.
3. Measured from single-ended waveform.
4. Defined as the maximum instantaneous voltage including overshoot.
5. Defined as the minimum instantaneous voltage including undershoot.
6. Measured at crossing point where the instantaneous voltage value of the rising edge of REFCLK+ equals the falling edge of REFCLK-.
7. Refers to the total variation from the lowest crossing point to the highest, regardless of which edge is crossing. Refers to all crossing points for this measurement.
8. Defined as the total variation of all crossing voltages of Rising REFCLK+ and Falling REFCLK-. This is the maximum allowed variance in VCROSS for any particular system.
9. Measured from differential waveform.

10. Measured from -150 mV to +150 mV on the differential waveform (derived from REFCLK+ minus REFCLK-). The signal must be monotonic through the measurement region for rise and fall time. The 300 mV measurement window is centered on the differential zero crossing.
11. Matching applies to rising edge rate for REFCLK+ and falling edge rate for REFCLK-. It is measured using a ±75 mV window centered on the median cross point where REFCLK+ rising meets REFCLK- falling. The median cross point is used to calculate the voltage thresholds the oscilloscope is to use for the edge rate calculations. The Rise Edge Rate of REFCLK+ should be compared to the Fall Edge Rate of REFCLK-; the maximum allowed difference should not exceed 20% of the slowest edge rate.

Table 17. RC1902xA 85Ω CLK AC/DC Characteristics - Non-PCIe, Source-Terminated Loads [1]

Symbol	Parameter	Conditions	Minimum	Typical	Maximum	Unit
V_{OH}	Output High Voltage [2]	V_{HIGH} = 800mV, Fast Slew Rate, 25MHz, 156.25MHz, 312.5MHz.	651	820	1003	mV
V_{OL}	Output Low Voltage [2]		-142	18	169	
V_{CROSS}	Crossing Voltage (abs) [3]		234	400	577	
ΔV_{CROSS}	Crossing Voltage (var) [3][4][5]		-	56	148	
t_R	Rise Time [2] V_T = 20% to 80% of swing		142	442	753	ps
t_F	Fall Time [2] V_T = 20% to 80% of swing		173	435	756	ps
V_{OH}	Output High Voltage [2]	V_{HIGH} = 900mV, Fast Slew Rate, 25MHz, 156.25MHz, 312.5MHz.	720	916	1130	mV
V_{OL}	Output Low Voltage [2]		-164	25	190	
V_{CROSS}	Crossing Voltage (abs) [3]		266	440	636	
ΔV_{CROSS}	Crossing Voltage (var) [3][4][5]		-	35	162	
t_R	Rise Time [2] V_T = 20% to 80% of swing		164	502	861	ps
t_F	Fall Time [2] V_T = 20% to 80% of swing		160	432	757	ps
t_{DC}	Output Duty Cycle [6]	Across all settings in this table, V_T = 0V.	47	49.7	52	%

1. Standard high impedance load with C_L = 2pF. See Test Loads.
2. Measured from single-ended waveform.
3. Measured at crossing point where the instantaneous voltage value of the rising edge of CLK equals the falling edge of CLKb.
4. Refers to the total variation from the lowest crossing point to the highest, regardless of which edge is crossing. Refers to all crossing points for this measurement.
5. Defined as the total variation of all crossing voltages of Rising CLK and Falling CLKb. This is the maximum allowed variance in VCROSS for any particular system.
6. Measured from differential waveform.

Table 18. RC1902xA 85Ω CLK AC/DC Characteristics - Non-PCIe, Double-Terminated Loads [1]

Symbol	Parameter	Conditions	Minimum	Typical	Maximum	Unit
V_{OH}	Output High Voltage [2]	V_{HIGH} = 800mV, Fast Slew Rate, 25MHz, 156.25MHz, 312.5MHz (amplitude is reduced by ~50% due to double termination).	372	430	473	mV
V_{OL}	Output Low Voltage [2]		-32	11	57	
V_{CROSS}	Crossing Voltage (abs) [3]		156	205	243	
ΔV_{CROSS}	Crossing Voltage (var) [3][4][5]		-	8	38	
t_R	Rise Time [2] V_T = 20% to 80% of swing		211	400	561	ps
t_F	Fall Time [2] V_T = 20% to 80% of swing		130	263	381	ps

Table 18. RC1902xA 85Ω CLK AC/DC Characteristics - Non-PCIe, Double-Terminated Loads (Cont.)[1]

Symbol	Parameter	Conditions	Minimum	Typical	Maximum	Unit
V_{OH}	Output High Voltage [2]	V_{HIGH} = 900mV, Fast Slew Rate, 25MHz, 100MHz, 156.25MHz, 312.5MHz (amplitude is reduced by ~50% due to double termination).	389	479	549	mV
V_{OL}	Output Low Voltage [2]		-31	12	55	
V_{CROSS}	Crossing Voltage (abs) [3]		173	222	265	
ΔV_{CROSS}	Crossing Voltage (var) [3][4][5]		-	8	41	
t_R	Rise Time [2] V_T = 20% to 80% of swing		220	477	635	ps
t_F	Fall Time [2] V_T = 20% to 80% of swing		152	268	356	ps
t_{DC}	Output Duty Cycle [6]	Across all settings in this table, V_T = 0V.	49	49.8	51	%

1. Both Tx and Rx are terminated (double-terminated) with C_L = 2pF. This reduces amplitude by 50%. See Test Loads.
2. Measured from single-ended waveform.
3. Measured at crossing point where the instantaneous voltage value of the rising edge of CLK equals the falling edge of CLKb.
4. Refers to the total variation from the lowest crossing point to the highest, regardless of which edge is crossing. Refers to all crossing points for this measurement.
5. Defined as the total variation of all crossing voltages of Rising CLK and Falling CLKb. This is the maximum allowed variance in VCROSS for any particular system.
6. Measured from differential waveform.

2.4.4 RC1901xA/RC1900xA CLK AC/DC Output Characteristics

The tables in the section apply to the RC19016/A100, RC19013/A100, RC19008/A100, RC19004/A100 and RC19002.

Table 19. RC1901xA/RC1900xA 85Ω CLK AC/DC Characteristics - Source-Terminated 100MHz PCIe Applications [1]

Symbol	Parameter	Condition	Minimum	Typical	Maximum	Specification Limit [2]	Unit
V_{MAX}	Absolute Max Voltage Includes 300mV of Overshoot (Vovs) [3][4]	Across all settings in this table at 100MHz.	-	871	1040	1150	mV
V_{MIN}	Absolute Min Voltage Includes -300mV of Undershoot (Vuds) [3][5]		-93	2	47	-300	
V_{HIGH}	Voltage High [3]	V_{HIGH} set to 800mV.	713	795	993	-	mV
V_{LOW}	Voltage Low [3]		-43	31	108	-	
V_{CROSS}	Crossing Voltage (abs) [3][6][7]	V_{HIGH} set to 800mV, scope averaging off.	286	406	519	250 to 550	
ΔV_{CROSS}	Crossing Voltage (var) [3][6][8]		-	31	136	140	
dv/dt	Slew Rate [9][10]	V_{HIGH} set to 800mV, Fast slew rate, scope averaging on.	2.1	3.2	4.6	2 to 5	V/ns
		V_{HIGH} set to 800mV, Slow slew rate, scope averaging on.	1.6	2.3	3.2	1.5 to 3.5	
$\Delta T_{R/F}$	Rise/Fall Matching [3][11]	V_{HIGH} set to 800mV. Fast slew rate.	-	5%	15%	20	%
$\Delta T_{R/F}$	Rise/Fall Matching [3][11]	V_{HIGH} set to 800mV. Slow slew rate.	-	7%	15%	20	%

Table 19. RC1901xA/RC1900xA 85Ω CLK AC/DC Characteristics - Source-Terminated 100MHz PCIe Applications [1]

Symbol	Parameter	Condition	Minimum	Typical	Maximum	Specification Limit [2]	Unit
V_{HIGH}	Voltage High [3]	V_{HIGH} set to 900mV.	793	883	1032	-	mV
V_{LOW}	Voltage Low [3]		-56	32	112	-	
V_{CROSS}	Crossing Voltage (abs) [3][6][7]	V_{HIGH} set to 900mV, scope averaging off.	312	441	567	300 to 600	
ΔV_{CROSS}	Crossing Voltage (var) [3][6][8]		-	33	140	140	
dv/dt	Slew Rate [9][10]	V_{HIGH} set to 900mV, Fast slew rate, scope averaging on.	2.1	3.4	4.9	2 to 5	V/ns
		V_{HIGH} set to 900mV, Slow slew rate, scope averaging on.	1.6	2.4	3.3	1.5 to 3.5	
$\Delta T_{R/F}$	Rise/Fall Matching [3][11]	V_{HIGH} set to 900mV. Fast slew rate.	-	5%	18%	20	%
$\Delta T_{R/F}$	Rise/Fall Matching [3][11]	V_{HIGH} set to 900mV. Slow slew rate.	-	7%	17%	20	%
t_{DC}	Output Duty Cycle [9]	V_T = 0V differential.	48.9	49.8	50.7	45 to 55	%

1. Standard high impedance load with C_L= 2pF. For more information, see Test Loads.
2. The specification limits are taken from either the *PCIe Base Specification, Revision 7.0* or from relevant x86 processor specifications, whichever is more stringent.
3. Measured from single-ended waveform.
4. Defined as the maximum instantaneous voltage including overshoot.
5. Defined as the minimum instantaneous voltage including undershoot.
6. Measured at crossing point where the instantaneous voltage value of the rising edge of REFCLK+ equals the falling edge of REFCLK-.
7. Refers to the total variation from the lowest crossing point to the highest, regardless of which edge is crossing. Refers to all crossing points for this measurement.
8. Defined as the total variation of all crossing voltages of Rising REFCLK+ and Falling REFCLK-. This is the maximum allowed variance in VCROSS for any particular system.
9. Measured from differential waveform.
10. Measured from -150mV to +150mV on the differential waveform (derived from REFCLK+ minus REFCLK-). The signal must be monotonic through the measurement region for rise and fall time. The 300mV measurement window is centered on the differential zero crossing.
11. Matching applies to rising edge rate for REFCLK+ and falling edge rate for REFCLK-. It is measured using a ±75mV window centered on the median cross point where REFCLK+ rising meets REFCLK- falling. The median cross point is used to calculate the voltage thresholds the oscilloscope is to use for the edge rate calculations. The Rise Edge Rate of REFCLK+ should be compared to the Fall Edge Rate of REFCLK-; the maximum allowed difference should not exceed 20% of the slowest edge rate.

Table 20. RC1901xA\RC1900xA 100Ω CLK AC/DC Characteristics - Source-Terminated 100MHz PCIe Apps [1]

Symbol	Parameter	Condition	Minimum	Typical	Maximum	Specification Limit [2]	Unit
V_{MAX}	Absolute Max Voltage Includes 300mV of Overshoot (Vovs) [3][4]	Across all settings in this table at 100MHz.	844	930	1062	1150	mV
V_{MIN}	Absolute Min Voltage Includes -300mV of Undershoot (Vuds) [3][5]		-139	7	65	-300	
V_{HIGH}	Voltage High [3]	V_{HIGH} set to 800mV.	713	816	918	-	mV
V_{LOW}	Voltage Low [3]		-47	22	103	-	
V_{CROSS}	Crossing Voltage (abs) [3][6][7]	V_{HIGH} set to 800mV, scope averaging off.	296	420	498	250 to 550	
ΔV_{CROSS}	Crossing Voltage (var) [3][6][8]		-28	39	106	140	

Table 20. RC1901xA\RC1900xA 100Ω CLK AC/DC Characteristics - Source-Terminated 100MHz PCIe Apps [1] (Cont.)

Symbol	Parameter	Condition	Minimum	Typical	Maximum	Specification Limit [2]	Unit
dv/dt	Slew Rate [9][10]	V_{HIGH} set to 800mV, Fast slew rate, scope averaging on.	2.1	2.9	3.7	2 to 4	V/ns
		V_{HIGH} set to 800mV, Slow slew rate, scope averaging on.	1.6	2.4	3.2	1.5 to 3.5	
$\Delta T_{R/F}$	Rise/Fall Matching [3][11]	V_{HIGH} set to 800mV. Fast slew rate.	-	3.6	18	20	%
$\Delta T_{R/F}$	Rise/Fall Matching [3][11]	V_{HIGH} set to 800mV. Slow slew rate.	-	3.5	15.5	20	%
V_{HIGH}	Voltage High [3]	V_{HIGH} set to 900mV.	802	907	1012	-	mV
V_{LOW}	Voltage Low [3]		-52	21	112	-	
V_{CROSS}	Crossing Voltage (abs) [3][6][7]	V_{HIGH} set to 900mV, scope averaging off.	326	454	535	300 to 600	
ΔV_{CROSS}	Crossing Voltage (var) [3][6][8]		-31	40	111	140	
dv/dt	Slew Rate [9][10]	V_{HIGH} set to 900mV, Fast slew rate, scope averaging on.	2.1	3.0	4.0	2 to 4	V/ns
		V_{HIGH} set to 900mV, Slow slew rate, scope averaging on.	1.7	2.6	3.4	1.5 to 3.5	
$\Delta T_{R/F}$	Rise/Fall Matching [3][11]	V_{HIGH} set to 900mV. Fast slew rate.	-	4.8	19.7	20	%
$\Delta T_{R/F}$	Rise/Fall Matching [3][11]	V_{HIGH} set to 900mV. Slow slew rate.	-	4.9	19.4	20	%
t_{DC}	Output Duty Cycle [9]	V_T = 0V differential.	49.6	49.9	50.2	45 to 55	%

1. Standard high impedance load with C_L= 2pF. For more information, see Test Loads.
2. The specification limits are taken from either the *PCIe Base Specification, Revision 7.0* or from relevant x86 processor specifications, whichever is more stringent.
3. Measured from single-ended waveform.
4. Defined as the maximum instantaneous voltage including overshoot.
5. Defined as the minimum instantaneous voltage including undershoot.
6. Measured at crossing point where the instantaneous voltage value of the rising edge of REFCLK+ equals the falling edge of REFCLK-.
7. Refers to the total variation from the lowest crossing point to the highest, regardless of which edge is crossing. Refers to all crossing points for this measurement.
8. Defined as the total variation of all crossing voltages of Rising REFCLK+ and Falling REFCLK-. This is the maximum allowed variance in VCROSS for any particular system.
9. Measured from differential waveform.
10. Measured from -150mV to +150mV on the differential waveform (derived from REFCLK+ minus REFCLK-). The signal must be monotonic through the measurement region for rise and fall time. The 300mV measurement window is centered on the differential zero crossing.
11. Matching applies to rising edge rate for REFCLK+ and falling edge rate for REFCLK-. It is measured using a ±75mV window centered on the median cross point where REFCLK+ rising meets REFCLK- falling. The median cross point is used to calculate the voltage thresholds the oscilloscope is to use for the edge rate calculations. The Rise Edge Rate of REFCLK+ should be compared to the Fall Edge Rate of REFCLK-; the maximum allowed difference should not exceed 20% of the slowest edge rate.

Table 21. RC1901xA/RC1900xA 85Ω CLK AC/DC Characteristics - Non-PCIe Apps, Source-Terminated Loads [1]

Symbol	Parameter	Condition	Minimum	Typical	Maximum	Unit
V_{OH}	Output High Voltage [2]	V_{HIGH} = 800mV, Fast Slew Rate, 156.25MHz, 312.5MHz. (Slow slew rate is not recommended for frequencies > 100MHz)	695	811	950	mV
V_{OL}	Output Low Voltage [2]		-71	30	115	
V_{CROSS}	Crossing Voltage (abs) [3]		283	431	582	
ΔV_{CROSS}	Crossing Voltage (var) [3][4][5]		0	35	168	
t_R	Rise Time [2] VT = 20% to 80% of swing		93	334	543	ps
t_F	Fall Time [2] VT = 20% to 80% of swing		103	293	539	ps
V_{OH}	Output High Voltage [2]	V_{HIGH} = 900mV, Fast Slew Rate, 156.25MHz, 312.5MHz. (Slow slew rate is not recommended for frequencies > 100MHz)	744	901	1084	mV
V_{OL}	Output Low Voltage [2]		-87	27	133	
V_{CROSS}	Crossing Voltage (abs) [3]		234	446	656	
ΔV_{CROSS}	Crossing Voltage (var) [3][4][5]		0	35	168	
t_R	Rise Time [2] VT = 20% to 80% of swing		65	386	683	ps
t_F	Fall Time [2] VT = 20% to 80% of swing		82	302	565	ps
t_{DC}	Output Duty Cycle [6]	Across all settings in this table, V_T = 0V.	47.6	49.9	51.9	%

1. Standard high impedance load with C_L= 2pF. For more information, see Test Loads.
2. Measured from single-ended waveform.
3. Measured at crossing point where the instantaneous voltage value of the rising edge of CLK equals the falling edge of CLKb.
4. Refers to the total variation from the lowest crossing point to the highest, regardless of which edge is crossing. Refers to all crossing points for this measurement.
5. Defined as the total variation of all crossing voltages of Rising CLK and Falling CLKb. This is the maximum allowed variance in VCROSS for any particular system.
6. Measured from differential waveform.

Table 22. RC1901xA/RC1900xA 85Ω CLK AC/DC Characteristics - Non-PCIe Apps, Double-Terminated Loads [1]

Symbol	Parameter	Condition	Minimum	Typical	Maximum	Unit
V_{OH}	Output High Voltage [2]	V_{HIGH} = 800mV, Fast Slew Rate, 156.25MHz, 312.5MHz - amplitude is reduced by ~50% due to double termination. (Slow slew rate is not recommended for frequencies >100MHz)	372	431	475	mV
V_{OL}	Output Low Voltage [2]		-32	12	57	
V_{CROSS}	Crossing Voltage (abs) [3]		156	205	245	
ΔV_{CROSS}	Crossing Voltage (var) [3][4][5]		-19	10	45	
t_R	Rise Time [2] VT = 20% to 80% of swing		185	396	615	ps
t_F	Fall Time [2] VT = 20% to 80% of swing		130	253	381	ps
V_{OH}	Output High Voltage [2]	V_{HIGH} = 900mV, Fast Slew Rate, 156.25MHz, 312.5MHz - amplitude is reduced by ~50% due to double termination. (Slow slew rate is not recommended for frequencies >100MHz)	389	479	549	mV
V_{OL}	Output Low Voltage [2]		-31	12	55	
V_{CROSS}	Crossing Voltage (abs) [3]		173	223	265	
ΔV_{CROSS}	Crossing Voltage (var) [3][4][5]		-20	10	45	
t_R	Rise Time [2] VT = 20% to 80% of swing		220	456	670	ps
t_F	Fall Time [2] VT = 20% to 80% of swing		152	256	356	ps
t_{DC}	Output Duty Cycle [6]	Across all settings in this table, V_T = 0V.	48.6	49.8	50.7	%

1. Both Tx and Rx are terminated (double-terminated) with C_L= 2pF. This reduces amplitude by 50%. For more information, see Test Loads.
2. Measured from single-ended waveform.
3. Measured at crossing point where the instantaneous voltage value of the rising edge of CLK equals the falling edge of CLKb.
4. Refers to the total variation from the lowest crossing point to the highest, regardless of which edge is crossing. Refers to all crossing points for this measurement.
5. Defined as the total variation of all crossing voltages of Rising CLK and Falling CLKb. This is the maximum allowed variance in VCROSS for any particular system.
6. Measured from differential waveform.

Table 23. RC1901xA/RC1900xA 100Ω CLK AC/DC Characteristics - Non-PCIe Apps, Source-Terminated Loads [1]

Symbol	Parameter	Condition	Minimum	Typical	Maximum	Unit
V_{OH}	Output High Voltage [2]	V_{HIGH} = 800mV, Fast Slew Rate, 156.25MHz, 312.5MHz. (Slow slew rate is not recommended for frequencies > 100MHz)	702	808	951	mV
V_{OL}	Output Low Voltage [2]		-73	34	118	
V_{CROSS}	Crossing Voltage (abs) [3]		256	376	539	
ΔV_{CROSS}	Crossing Voltage (var) [3][4][5]		0	37	133	
t_R	Rise Time [2] VT = 20% to 80% of swing		217	376	541	ps
t_F	Fall Time [2] VT = 20% to 80% of swing		140	365	576	ps
V_{OH}	Output High Voltage [2]	V_{HIGH} = 900mV, Fast Slew Rate, 156.25MHz, 312.5MHz. (Slow slew rate is not recommended for frequencies > 100MHz)	756	890	1078	mV
V_{OL}	Output Low Voltage [2]		-85	31	147	
V_{CROSS}	Crossing Voltage (abs) [3]		269	405	635	
ΔV_{CROSS}	Crossing Voltage (var) [3][4][5]		0	47	144	
t_R	Rise Time [2] VT = 20% to 80% of swing		222	412	610	ps
t_F	Fall Time [2] VT = 20% to 80% of swing		127	368	591	ps
t_{DC}	Output Duty Cycle [6]	Across all settings in this table, V_T = 0V.	48.2	48.9	52.1	%

1. Standard high impedance load with C_L= 2pF. For more information, see Test Loads.
2. Measured from single-ended waveform.
3. Measured at crossing point where the instantaneous voltage value of the rising edge of CLK equals the falling edge of CLKb.
4. Refers to the total variation from the lowest crossing point to the highest, regardless of which edge is crossing. Refers to all crossing points for this measurement.
5. Defined as the total variation of all crossing voltages of Rising CLK and Falling CLKb. This is the maximum allowed variance in VCROSS for any particular system.
6. Measured from differential waveform.

Table 24. RC1901xA/RC1900xA 100Ω CLK AC/DC Characteristics–Non-PCIe Apps, Double-Terminated Loads [1]

Symbol	Parameter	Condition	Minimum	Typical	Maximum	Unit
V_{OH}	Output High Voltage [2]	V_{HIGH} = 800mV, Fast Slew Rate, 156.25MHz, 312.5MHz - amplitude is reduced by ~50% due to double termination. (Slow slew rate is not recommended for frequencies > 100MHz)	365	398	435	mV
V_{OL}	Output Low Voltage [2]		-31	10	43	
V_{CROSS}	Crossing Voltage (abs) [3]		152	186	233	
ΔV_{CROSS}	Crossing Voltage (var) [3][4][5]		-14	7	41	
t_R	Rise Time [2] VT = 20% to 80% of swing		226	409	634	ps
t_F	Fall Time [2] VT = 20% to 80% of swing		174	260	380	ps
V_{OH}	Output High Voltage [2]	V_{HIGH} = 900mV, Fast Slew Rate, 156.25MHz, 312.5MHz - amplitude is reduced by ~50% due to double termination. (Slow slew rate is not recommended for frequencies >100MHz)	405	442	492	mV
V_{OL}	Output Low Voltage [2]		-33	12	45	
V_{CROSS}	Crossing Voltage (abs) [3]		167	201	261	
ΔV_{CROSS}	Crossing Voltage (var) [3][4][5]		-14	8	42	
t_R	Rise Time [2] VT = 20% to 80% of swing		203	467	695	ps
t_F	Fall Time [2] VT = 20% to 80% of swing		175	263	385	ps
t_{DC}	Output Duty Cycle [6]	Across all settings in this table, V_T = 0V.	49	50	51	%

1. Both Tx and Rx are terminated (double-terminated) with C_L= 2pF. This reduces amplitude by 50%. For more information, see Test Loads.
2. Measured from single-ended waveform.
3. Measured at crossing point where the instantaneous voltage value of the rising edge of CLK equals the falling edge of CLKb.
4. Refers to the total variation from the lowest crossing point to the highest, regardless of which edge is crossing. Refers to all crossing points for this measurement.
5. Defined as the total variation of all crossing voltages of Rising CLK and Falling CLKb. This is the maximum allowed variance in VCROSS for any particular system.
6. Measured from differential waveform.

2.4.5 Output-to-Output and Input-to-Output Skew

Table 25. RC1902xA Output-to-Output and Input-to-Output Skew [1]

Symbol	Parameter	Condition	Minimum	Typical	Maximum	Unit
t_{SK}	Output-to-Output Skew [2]	Any two outputs, all outputs at fast slew rate.	-	38	50	ps
		Any two outputs, all outputs at slow slew rate.	-	40	60	ps
t_{PD}	Input-to-Output Delay Double-Terminated [3]	Clock in to any output, all outputs at fast slew rate.	1.1	1.2	1.4	ns
		Clock in to any output, all outputs at slow slew rate.	1.2	1.4	1.6	ns
t_{PD}	Input-to-Output Delay Source-Terminated [3]	Clock in to any output, all outputs at fast slew rate.	1.2	1.4	1.6	ns
		Clock in to any output, all outputs at slow slew rate.	1.4	1.5	1.8	ns
Δt_{PD}	Input-to-Output Delay Variation [3]	A single device, over temperature *and voltage*.	-	1.4	2	ps/°C

1. For more information, see Test Loads.
2. This parameter is defined in accordance with JEDEC Standard 65.
3. Defined as the time between to output rising edge and the input rising edge that caused it.

Table 26. RC1901xA/RC1900xA Output-to-Output and Input-to-Output Skew [1]

Symbol	Parameter	Condition	Minimum	Typical	Maximum	Unit
t_{SK}	Output-to-Output Skew [2]	Any two outputs, all outputs at fast slew rate.	-	37	50	ps
		Any two outputs, all outputs at slow slew rate.	-	39	60	ps
t_{PD}	Input-to-Output Delay Double-Terminated [3]	Clock in to any output, all outputs at fast slew rate.	1.1	1.4	1.6	ns
		Clock in to any output, all outputs at slow slew rate.	1.2	1.5	1.8	ns
t_{PD}	Input-to-Output Delay Source-Terminated [3]	Clock in to any output, all outputs at fast slew rate.	1.2	1.4	1.7	ns
		Clock in to any output, all outputs at slow slew rate.	1.3	1.5	1.8	ns
Δt_{PD}	Input-to-Output Delay Variation [3]	A single device, over temperature *and voltage*.	-	1.5	1.8	ps/°C

1. For more information, see Test Loads.
2. This parameter is defined in accordance with JEDEC Standard 65.
3. Defined as the time between to output rising edge and the input rising edge that caused it.

2.4.6 I/O Signals

Table 27. I/O Electrical Characteristics

Symbol	Parameter	Condition	Minimum	Typical	Maximum	Unit
V_{IH}	Input High Voltage [1][2]	Single-ended inputs, unless otherwise listed.	2	-	VDD + 0.3	V
V_{IL}	Input Low Voltage [1][2]		-0.3	-	0.8	V
V_{IH}	Input High Voltage	SADR_tri[1:0].	2.4	-	VDD+0.3	V
V_{IM}	Input Mid Voltage		1.2	-	1.8	V
V_{IL}	Input Low Voltage		-0.3	-	0.8	V
V_{OH}	Output High Voltage [2]	SBI_OUT, IOH = -2mA	2.4	3.2	VDD + 0.3	V
V_{OL}	Output Low Voltage [2]	SBI_OUT, IOL = 2mA	-	0.1	0.4	V
I_{IH}	Input Leakage Current High, V_{IN} = VDD	CLKIN (RC19020, RC19020A072)	-3	-	+3	µA
		CLKINb (RC19020, RC19020A072)	5	-	15	
		CLKIN (All other devices)	5	-	15	
		CLKINb (All other devices)	-3	-	+3	
		Single-ended inputs, unless otherwise listed (including PWRGD_PWRDNb for RC19020).	25	-	35	
		PWRGD_PWRDNb (all devices except RC19020)	-1	-	5	
		SADR_tri[1:0]	25	-	35	
I_{IL}	Input Leakage Current Low, V_{IN} = 0V	CLKIN (RC19020, RC19020A072)	-12	-	-6	µA
		CLKINb (RC19020, RC19020A072)	-3	-	+3	
		CLKIN (All other devices)	-3	-	+3	
		CLKINb (All other devices)	-12	-	-6	
		Single-ended inputs, unless otherwise listed (including PWRGD_PWRDNb for RC19020).	-3	-	+3	
		PWRGD_PWRDNb (all devices except RC19020).	-35	-	-20	
		SADR_tri[1:0]	-35	-	-20	
Rp	PD_CLKIN	Value of internal pull-down resistor to ground (CLKIN)	-	53	-	kΩ
	PU_CLKINb	Value of internal pull-up resistor to 0.5V (CLKINb).	-	57	-	
	Pull-up/Pull-down Resistor	Single-ended inputs.	-	125	-	

Table 27. I/O Electrical Characteristics (Cont.)

Symbol	Parameter	Condition	Minimum	Typical	Maximum	Unit
Zo	Output Impedance	SBI_OUT pin.	-	50	-	Ω
		CLK outputs, RC190xxA (differential value).[3]	77	82	87	Ω
		CLK outputs, RC190xxA100 (differential value).[3]	89	100	111	Ω

1. For SCLK and SDATA, see the SMBus Electrical Characteristics table.
2. These values are compliant with JESD8C.01.
3. Measured at V_{CROSS} (abs). Target values are 85Ω ±20% (64Ω to 102Ω) or 100Ω ±20% (80Ω to 120Ω).

2.4.7 Power Supply Current

Table 28. Power Supply Current [1][2][3]

Symbol	Parameter	Condition	Minimum	Typical	Maximum	Unit
I_{DDCLK}	V_{DDCLK} Operating Current – RC19024	85Ω impedance, fast slew rate, source-terminated load at 100MHz. PWRGD_PWRDNb = 1.	-	245	267	mA
		85Ω impedance, fast slew rate, double-terminated load at 100MHz. PWRGD_PWRDNb = 1.	-	303	323	
		85Ω impedance, fast slew rate, source-terminated load at maximum output frequency. PWRGD_PWRDNb = 1.	-	421	448	
		85Ω impedance, fast slew rate, double-terminated load at maximum output frequency. PWRGD_PWRDNb = 1.	-	484	504	
I_{DDCLK}	V_{DDCLK} Operating Current – RC19020	85Ω impedance, fast slew rate, source-terminated load at 100MHz. PWRGD_PWRDNb = 1.	-	217	233	mA
		85Ω impedance, fast slew rate, double-terminated load at 100MHz. PWRGD_PWRDNb = 1.	-	262	279	
		85Ω impedance, fast slew rate, source-terminated load at maximum output frequency. PWRGD_PWRDNb = 1.	-	362	381	
		85Ω impedance, fast slew rate, double-terminated load at maximum output frequency. PWRGD_PWRDNb = 1.	-	420	439	
I_{DDCLK}	V_{DDCLK} Operating Current – RC19020A072	85Ω impedance, fast slew rate, source-terminated load at 100MHz. PWRGD_PWRDNb = 1.	-	224	246	mA
		85Ω impedance, fast slew rate, double-terminated load at 100MHz. PWRGD_PWRDNb = 1.	-	254	276	
		85Ω impedance, fast slew rate, source-terminated load at maximum output frequency. PWRGD_PWRDNb = 1.	-	343	355	
		85Ω impedance, fast slew rate, double-terminated load at maximum output frequency. PWRGD_PWRDNb = 1.	-	402	414	

Table 28. Power Supply Current [1][2][3] (Cont.)

Symbol	Parameter	Condition	Minimum	Typical	Maximum	Unit
I_{DDCLK}	V_{DDCLK} Operating Current – RC19016	85Ω impedance, fast slew rate, source-terminated load at 100MHz. PWRGD_PWRDNb = 1.	-	154	175	mA
		85Ω impedance, fast slew rate, double-terminated load at 100MHz. PWRGD_PWRDNb = 1.	-	210	231	
		85Ω impedance, fast slew rate, source-terminated load at maximum output frequency. PWRGD_PWRDNb = 1.	-	270	291	
		85Ω impedance, fast slew rate, double-terminated load at maximum output frequency. PWRGD_PWRDNb = 1.	-	336	357	
I_{DDCLK}	V_{DDCLK} Operating Current – RC19013	85Ω impedance, fast slew rate, source-terminated load at 100MHz. PWRGD_PWRDNb = 1.	-	110	131	mA
		85Ω impedance, fast slew rate, double-terminated load at 100MHz. PWRGD_PWRDNb = 1.	-	174	194	
		85Ω impedance, fast slew rate, source-terminated load at maximum output frequency. PWRGD_PWRDNb = 1.	-	215	236	
		85Ω impedance, fast slew rate, double-terminated load at maximum output frequency. PWRGD_PWRDNb = 1.	-	276	297	
I_{DDCLK}	V_{DDCLK} Operating Current – RC19008	85Ω impedance, fast slew rate, source-terminated load at 100MHz. PWRGD_PWRDNb = 1.	-	72	92	mA
		85Ω impedance, fast slew rate, double-terminated load at 100MHz. PWRGD_PWRDNb = 1.	-	116	137	
		85Ω impedance, fast slew rate, source-terminated load at maximum output frequency. PWRGD_PWRDNb = 1.	-	126	146	
		85Ω impedance, fast slew rate, double-terminated load at maximum output frequency. PWRGD_PWRDNb = 1.	-	183	203	
I_{DDCLK}	V_{DDCLK} Operating Current – RC19004	85Ω impedance, fast slew rate, source-terminated load at 100MHz. PWRGD_PWRDNb = 1.	-	39	59	mA
		85Ω impedance, fast slew rate, double-terminated load at 100MHz. PWRGD_PWRDNb = 1.	-	60	80	
		85Ω impedance, fast slew rate, source-terminated load at maximum output frequency. PWRGD_PWRDNb = 1.	-	79	100	
		85Ω impedance, fast slew rate, double-terminated load at maximum output frequency. PWRGD_PWRDNb = 1.	-	102	122	

Table 28. Power Supply Current [1][2][3] (Cont.)

Symbol	Parameter	Condition	Minimum	Typical	Maximum	Unit
I_{DDCLK}	V_{DDCLK} Operating Current – RC19002	85Ω impedance, fast slew rate, source-terminated load at 100MHz.	-	30	40	mA
		85Ω impedance, fast slew rate, double-terminated load at 100MHz.	-	39	49	
		85Ω impedance, fast slew rate, source-terminated load at maximum output frequency.	-	55	62	
		85Ω impedance, fast slew rate, double-terminated load at maximum output frequency.	-	66	73	
I_{DDCLK}	V_{DDCLK} Operating Current – RC19016A100	100Ω impedance, fast slew rate, source-terminated load at 100MHz. PWRGD_PWRDNb = 1.	-	151	172	mA
		100Ω impedance, fast slew rate, double-terminated load at 100MHz. PWRGD_PWRDNb = 1.	-	187	208	
		100Ω impedance, fast slew rate, source-terminated load at maximum output frequency. PWRGD_PWRDNb = 1.	-	265	285	
		100Ω impedance, fast slew rate, double-terminated load at maximum output frequency. PWRGD_PWRDNb = 1.	-	303	323	
I_{DDCLK}	V_{DDCLK} Operating Current – RC19013A100	100Ω impedance, fast slew rate, source-terminated load at 100MHz. PWRGD_PWRDNb = 1.	-	97	117	mA
		100Ω impedance, fast slew rate, double-terminated load at 100MHz. PWRGD_PWRDNb = 1.	-	160	180	
		100Ω impedance, fast slew rate, source-terminated load at maximum output frequency. PWRGD_PWRDNb = 1.	-	194	214	
		100Ω impedance, fast slew rate, double-terminated load at maximum output frequency. PWRGD_PWRDNb = 1.	-	257	278	
I_{DDCLK}	V_{DDCLK} Operating Current – RC19008A100	100Ω impedance, fast slew rate, source-terminated load at 100MHz. PWRGD_PWRDNb = 1.	-	70	90	mA
		100Ω impedance, fast slew rate, double-terminated load at 100MHz. PWRGD_PWRDNb = 1.	-	106	126	
		100Ω impedance, fast slew rate, source-terminated load at maximum output frequency. PWRGD_PWRDNb = 1.	-	121	142	
		100Ω impedance, fast slew rate, double-terminated load at maximum output frequency. PWRGD_PWRDNb = 1.	-	169	190	

Table 28. Power Supply Current [1][2][3] (Cont.)

Symbol	Parameter	Condition	Minimum	Typical	Maximum	Unit
I_{DDCLK}	V_{DDCLK} Operating Current – RC19004A100	100Ω impedance, fast slew rate, source-terminated load at 100MHz. PWRGD_PWRDNb = 1.	-	38	59	mA
		100Ω impedance, fast slew rate, double-terminated load at 100MHz. PWRGD_PWRDNb = 1.	-	59	79	
		100Ω impedance, fast slew rate, source-terminated load at maximum output frequency. PWRGD_PWRDNb = 1.	-	74	94	
		100Ω impedance, fast slew rate, double-terminated load at maximum output frequency. PWRGD_PWRDNb = 1.	-	97	118	
I_{DDCLK}	V_{DDCLK} Operating Current – RC19002	100Ω impedance, fast slew rate, source-terminated load at 100MHz.	-	35	44	mA
		100Ω impedance, fast slew rate, double-terminated load at 100MHz.	-	41	50	
		100Ω impedance, fast slew rate, source-terminated load at maximum output frequency.	-	61	69	
		100Ω impedance, fast slew rate, double-terminated load at maximum output frequency.	-	70	77	
I_{DDDIG}	V_{DDDIG} Operating Current	PWRGD_PWRDNb = 1, RC19024/RC19016/13A/08A/04A/02A.	-	0.6	1.3	mA
I_{DDR}	V_{DDR} Operating Current	PWRGD_PWRDNb = 1, RC19020, RC19020A072	-	0.6	1.3	mA
I_{DDCLK_PD}	V_{DDCLK} Power-down Current	PWRGD_PWRDNb = 0, RC19016/13A/08A/04A.	-	0.6	1.3	mA
		PWRGD_PWRDNb = 0, RC19024, RC19020, RC19020A072	-	3.5	5.0	mA
I_{DDDIG_PD}	V_{DDDIG} Power-down Current	PWRGD_PWRDNb = 0, RC19024/RC19016/13A/08A/04A.	-	3.1	5.0	mA
I_{DDR_PD}	V_{DDR} Power-down Current	PWRGD_PWRDNb = 0, RC19020, RC19020A072	-	0.6	1.3	mA

1. For more information, see Test Loads.
2. Output voltage set to 800mV. Slew rate has negligible effect on current consumption, so only fast is listed.
3. Total operating current is obtained by adding IDDCLK + IDDDIG, or IDDCLK + IDDR for a particular device and operating mode. Power down current is obtained by adding IDDCLK_PD + IDDDIG_PD, or IDDCLK_PD + IDDR_PD for a particular device.

2.4.8 CLKIN AC/DC Characteristics

Table 29. CLKIN AC/DC Characteristic

Symbol	Parameter	Condition	Minimum [1]	Typical	Maximum	Unit
V_{CROSS}	Input Crossover Voltage	-	100	-	1400	mV
V_{SWING}	Input Swing	Differential value.	200	-	-	mV
dv/dt	Input Slew Rate	Measured differentially. [2]	0.6	-	-	V/ns

1. For values required for performance, see the Phase Jitter tables.
2. Measured from -150mV to +150mV on the differential waveform (derived from REFCLK+ minus REFCLK-). The signal must be monotonic through the measurement region for rise and fall time. The 300mV measurement window is centered on the differential zero-crossing.

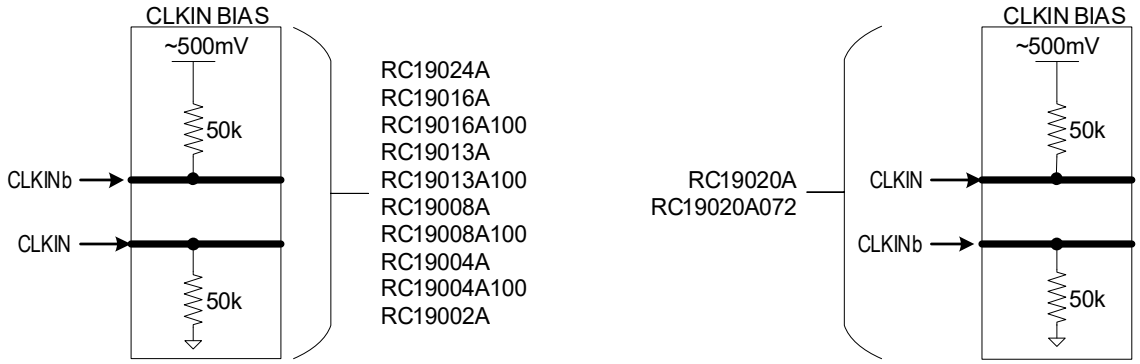

Figure 10. Clock Input Bias Network

2.4.9 SMBus Electrical Characteristics

This section applies to all devices except the RC19002 because the RC19002 does not have an SMBus interface.

Table 30. SMBus DC Electrical Characteristics [1]

Symbol	Parameter	Condition	Minimum	Typical	Maximum	Unit
V_{IH}	High-level Input Voltage for SMBCLK and SMBDAT	-	0.8 VDD	-	-	V
V_{IL}	Low-level Input Voltage for SMBCLK and SMBDAT	-	-	-	0.3 VDD	
V_{HYS}	Hysteresis of Schmitt Trigger Inputs	-	0.05 VDD	-	-	
V_{OL}	Low-level Output Voltage for SMBCLK and SMBDAT	I_{OL} = 4mA	-	0.28	0.4	
I_{IN}	Input Leakage Current per Pin	-	[2]	-	[2]	µA
C_B	Capacitive Load for Each Bus Line	-	-	-	400	pF

1. V_{OH} is governed by the V_{PUP}, the voltage rail to which the pull-up resistors are connected.
2. For more information, see I/O Electrical Characteristics.

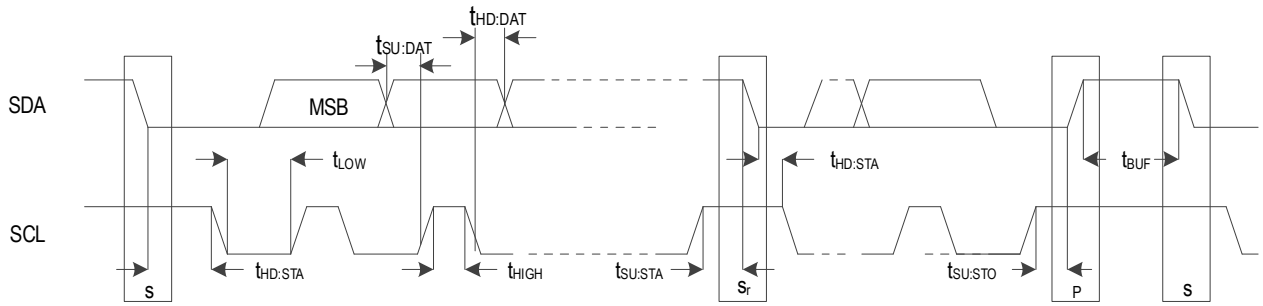

Figure 11. SMBus Target Timing Diagram

Table 31. SMBus AC Electrical Characteristics

Symbol	Parameter	Condition	100kHz Class		400kHz Class		Unit
			Minimum	Maximum	Minimum	Maximum	
f_{SMB}	SMBus Operating Frequency	[1]	10	100	10	400	kHz
t_{BUF}	Bus free time between STOP and START Condition	-	4.7	-	1.3	-	µs
$t_{HD:STA}$	Hold Time after (REPEATED) START Condition	[2]	4	-	0.6	-	µs
$t_{SU:STA}$	REPEATED START Condition Setup Time	-	4.7	-	0.6	-	µs
$t_{SU:STO}$	STOP Condition Setup Time	-	4	-	0.6	-	µs
$t_{HD:DAT}$	Data Hold Time	[3]	300	-	300	-	ns
$t_{SU:DAT}$	Data Setup Time	-	250	-	100	-	ns
$t_{TIMEOUT}$	Detect SCL_SCLK Low Timeout	[4]	25	35	25	35	ms
$t_{TIMEOUT}$	Detect SDA_nCS Low Timeout	[5]	25	35	25	35	ms
t_{LOW}	Clock Low Period	-	4.7	-	1.3	-	µs
t_{HIGH}	Clock High Period	[6]	4	50	0.6	50	µs
$t_{LOW:SEXT}$	Cumulative Clock Low Extend Time - Target (Slave)	[7]	N/A		N/A		ms
$t_{LOW:MEXT}$	Cumulative Clock Low Extend Time - Host (Master)	[8]	N/A		N/A		ms
t_F	Clock/Data Fall Time	[9]	-	300	-	300	ns
t_R	Clock/Data Rise Time	[9]	-	1000	-	300	ns
t_{SPIKE}	Noise Spike Suppression Time	[10]	-	–	0	50	ns

1. Power must be applied and PWRGD_PWRDNb must be a 1 for the SMBus to be active.
2. A host should not drive the clock at a frequency below the minimum f_{SMB}. Further, the operating clock frequency should not be reduced below the minimum value of fSMB due to periodic clock extending by target devices as defined in Section 5.3.3 of *System Management Bus (SMBus) Specification*, Version 3.2 dated 12 Jan 2022. This limit does not apply to the bus idle condition, and this limit is independent from the $t_{LOW:\ SEXT}$ and $t_{LOW:\ MEXT}$ limits. For example, if the SMBCLK is high for $t_{HIGH,MAX}$, the clock must not be periodically stretched longer than $1/f_{SMB,MIN} - t_{HIGH,MAX}$. This requirement does not pertain to a device that extends the SMBCLK low for data processing of a received byte, data buffering and so forth for longer than 100 µs in a non-periodic way.
3. A device must internally provide sufficient hold time for the SMBDAT signal (with respect to the VIH,MIN of the SMBCLK signal) to bridge the undefined region of the falling edge of SMBCLK.
4. Target devices may have caused other target devices to hold SDA low. This is the maximum time that a device can hold SMBDAT low after the host raises SMBCLK after the last bit of a transaction. A target device may detect how long SDA is held low and release SDA after the time out period.
5. Devices participating in a transfer can abort the transfer in progress and release the bus when any single clock low interval exceeds the value of $t_{TIMEOUT,MIN}$. After the host in a transaction detects this condition, it must generate a stop condition within or after the current data byte in the transfer process. Devices that have detected this condition must reset their communication and be able to receive a new START condition no later than $t_{TIMEOUT,MAX}$. Typical device examples include the host controller, and embedded controller, and most devices that can master the SMBus. Some simple devices do not contain a clock low drive circuit; this simple kind of device typically may reset its communications port after a start or a stop condition. A timeout condition can only be ensured if the device that is forcing the timeout holds the SMBCLK low for $t_{TIMEOUT,MAX}$ or longer.
6. The device has the option of detecting a timeout if the SMBDATA pin is also low for this time.
7. $t_{HIGH,MAX}$ provides a simple guaranteed method for hosts to detect bus idle conditions. A host can assume that the bus is free if it detects that the clock and data signals have been high for greater than $t_{HIGH,MAX}$.
8. tLOW:MEXT is the cumulative time a host device is allowed to extend its clock cycles within each byte of a message as defined from START-to-ACK, ACK-to-ACK, or ACK-to-STOP. It is possible that a target device or another host will also extend the clock causing the combined clock low time to be greater than tLOW:MEXT on a given byte. This parameter is measured with a full-speed target device as the sole target of the host.
9. The rise and fall time measurement limits are defined as follows:
   Rise Time Limits: $(V_{IL:MAX} - 0.15\ V)$ to $(V_{IH:MIN} + 0.15\ V)$
   Fall Time Limits: $(V_{IH:MIN} + 0.15\ V)$ to $(V_{IL:MAX} - 0.15\ V)$
10. Devices must provide a means to reject noise spikes of a duration up to the maximum specified value.

2.4.10 Side-Band Interface

This section applies to all device except the RC19002 because the RC19002 does not have a Side Band Interface.

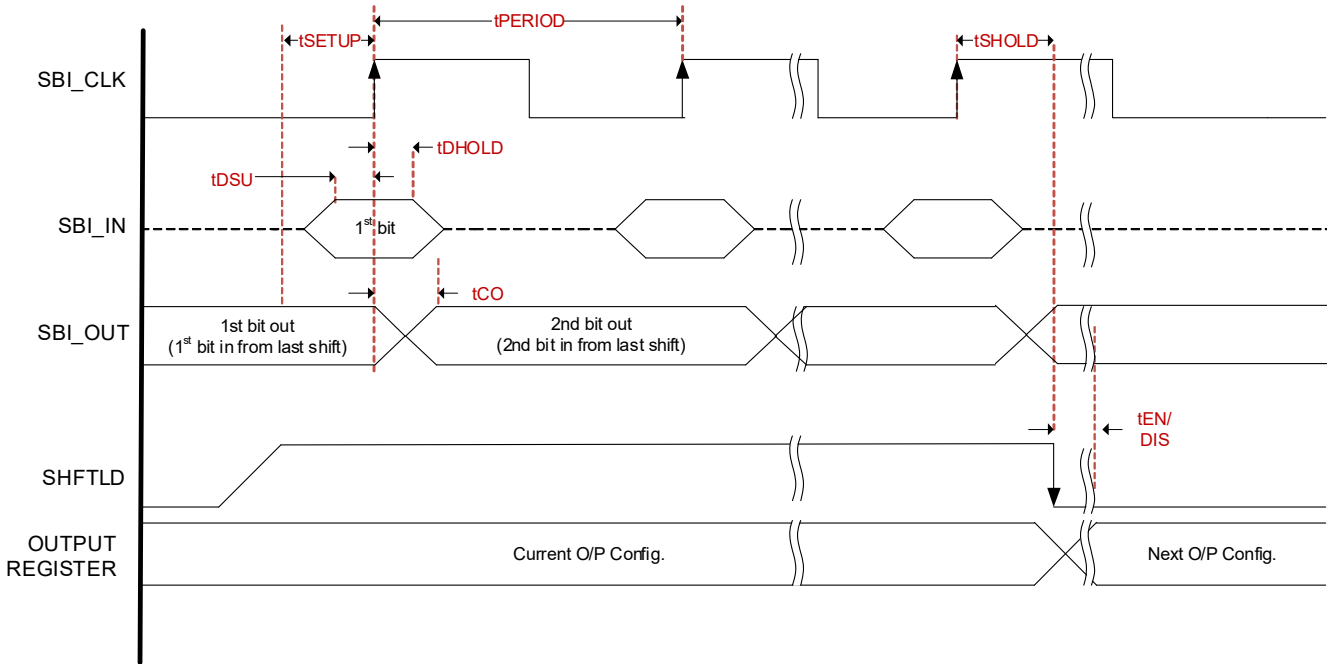

Figure 12. Side-Band Interface Timing

Figure 12 is the timing diagram and Table 32 provides the electrical characteristics for the Side-Band Interface. The SBI supports clock rates up to 25MHz.

Table 32. Electrical Characteristics – Side-Band Interface

Symbol	Parameter	Condition	Minimum	Typical	Maximum	Unit
t_{PERIOD}	Clock Period	Clock period.	40	-	-	ns
t_{SETUP}	SHFT Setup Time to Clock	SHFT_LDB high to SBI_CLK rising edge.	10	-	-	ns
t_{DSU}	SBI_IN Setup Time	SBI_IN setup to SBI_CLK rising edge.	5	-	-	ns
t_{DHOLD}	SBI_IN Hold Time	SBI_IN hold after SBI_CLK rising edge.	2	-	-	ns
t_{CO}	SBI_CLK to SBI_OUT	SBI_CLK rising edge to SBI_OUT valid.	2	-	-	ns
t_{SHOLD}	SHFT Hold Time	SHFT_LDB hold (high) after SBI_CLK rising edge (SBI_CLK to SHFT_LDB falling edge).	10	-	-	ns
$t_{EN/DIS}$	Enable/Disable Time	Delay from SHFT_LDB falling edge to next output configuration taking effect.[1]	4	-	12	clocks
t_{SLEW}	Slew Rate	SBI_CLK (between 20% and 80%).[2]	0.7	-	6	V/ns

1. Refers to the output clock.
2. Control input must be monotonic from 20% to 80% of input swing.

3. Test Loads

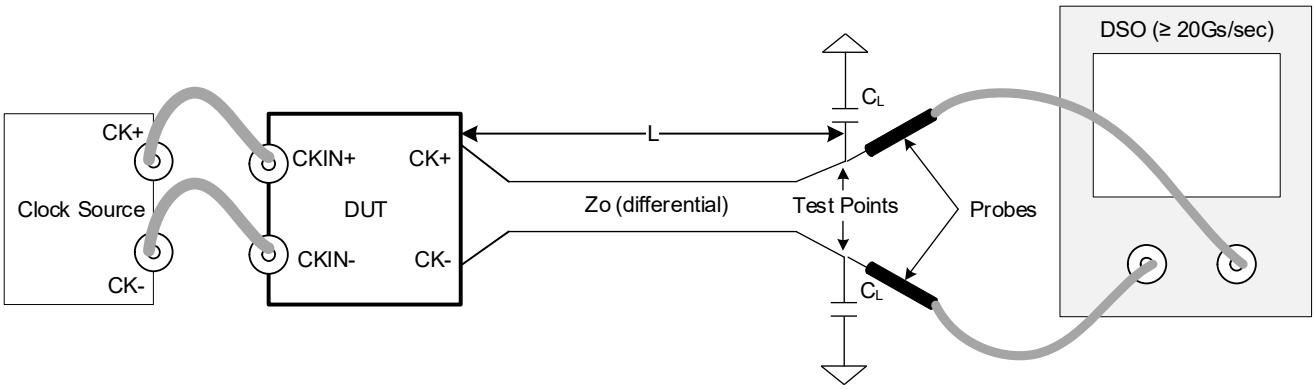

Figure 13. AC/DC Test Load for Differential Outputs (Standard PCIe Source-Terminated)

Table 33. Parameters for AC/DC Test Load (Standard PCIe Source-Terminated)

Device	Clock Source	Rs (ohms)	Zo (ohms)	L (cm)	C_L (pF)
RC19xxxA	SMA100B	Internal	85	25.4	2
RC19xxxA100	SMA100B	Internal	100	25.4	2

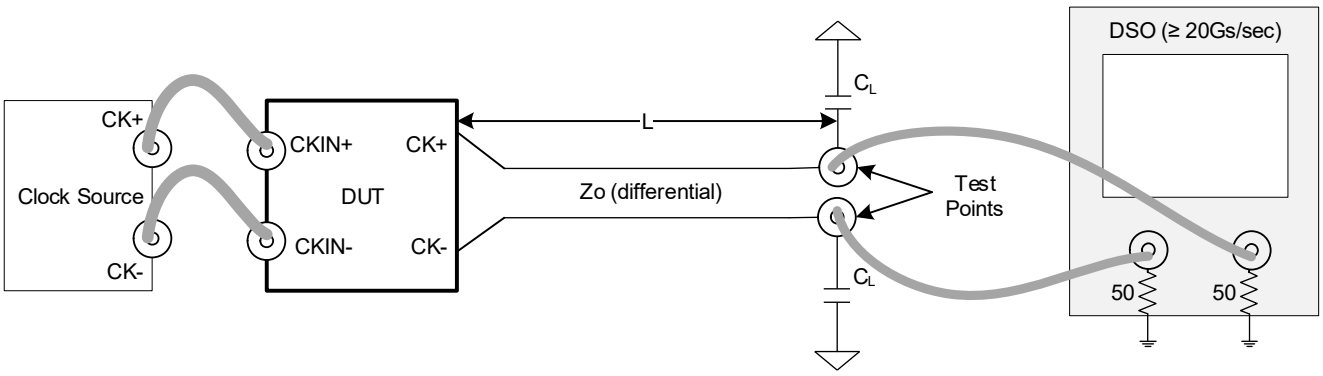

Figure 14. AC/DC Test Load for Differential Outputs (Double-Terminated)

Table 34. Parameters for AC/DC Test Load (Double-Terminated)

Device	Clock Source	Rs (ohms)	Zo (ohms)	L (cm)	C_L (pF)
RC19xxxA	SMA100B	Internal	85	25.4	2
RC19xxxA100	SMA100B	Internal	100	25.4	2

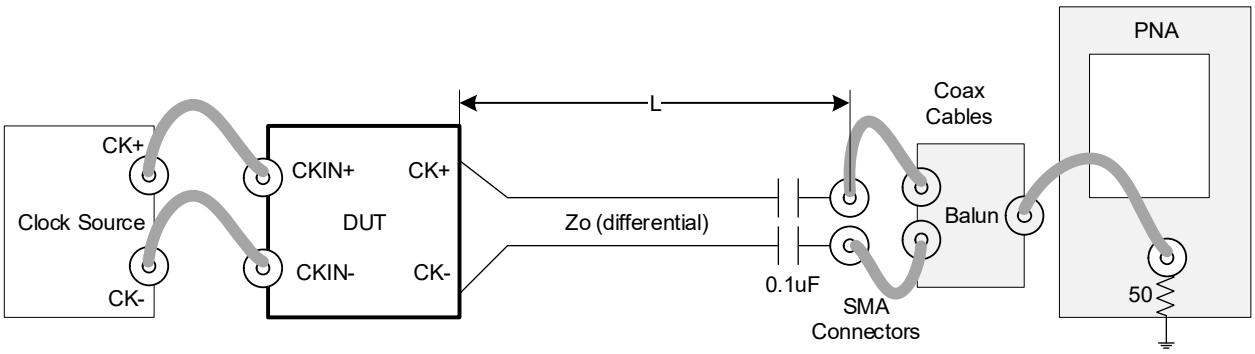

Figure 15. Test Load for PCIe Phase Jitter Measurements

Table 35. Parameters for PCIe Gen5 Jitter Measurement

Device	Clock Source	Rs (ohms)	Zo (ohms)	L (cm) [1]	C_L (pF)
RC19xxxA	SMA100B	Internal	85	25.4	2
RC19xxxA100	SMA100B	Internal	100	25.4	2

1. PCIe Gen6 specifies L = 0cm for 32 and 64 GT/s. L = 25.4cm is more conservative.

4. General SMBus Serial Interface Information

This section applies to all device except the RC19002 which does not have an SMBus interface.

4.1 How to Write

- Controller (host) sends a start bit
- Controller (host) sends the write address
- Renesas clock will **acknowledge**
- Controller (host) sends the beginning byte Location = N
- Renesas clock will **acknowledge**
- Controller (host) sends the byte count = X
- Renesas clock will **acknowledge**
- Controller (host) starts sending Byte **N through Byte N+X-1**
- Renesas clock will **acknowledge** each byte one at a time
- Controller (host) sends a stop bit

Index Block Write Operation			
Controller (Host)			**Renesas (Target/Receiver)**
T	starT bit		
Target Address			
WR	WRite		
			ACK
Beginning Byte = N			
			ACK
Data Byte Count = X			
			ACK
Beginning Byte N		X Byte	
			ACK
O			
O			O
O			O
			O
Byte N + X - 1			
			ACK
P	stoP bit		

4.2 How to Read

- Controller (host) will send a start bit
- Controller (host) sends the write address
- Renesas clock will **acknowledge**
- Controller (host) sends the beginning byte Location = N
- Renesas clock will **acknowledge**
- Controller (host) will send a separate start bit
- Controller (host) sends the read address
- Renesas clock will **acknowledge**
- Renesas clock will send the data byte count = X
- Renesas clock sends Byte **N+X-1**
- Renesas clock sends **Byte L through Byte X (if X(H) was written to Byte 7)**
- Controller (host) will need to acknowledge each byte
- Controller (host) will send a not acknowledge bit
- Controller (host) will send a stop bit

Index Block Read Operation			
Controller (Host)			**Renesas (Target/Receiver)**
T	starT bit		
Target Address			
WR	WRite		
			ACK
Beginning Byte = N			
			ACK
RT	Repeat starT		
Target Address			
RD	ReaD		
			ACK
			Data Byte Count=X
ACK			
		X Byte	Beginning Byte N
ACK			
			O
O			O
O			O
O			
			Byte N + X - 1
N	Not acknowledge		
P	stoP bit		

4.3 SMBus Bit Types

Bit Description	Definition
RO	Read-only
RW	Read-write
RW1C	Read/Write ‘1’ to clear
RESERVED	Undefined do not write

4.4 Write Lock Functionality

WRITE_LOCK	WRITE_LOCK RW1C	SMBus Write Protect
0	0	No
0	1	Yes
1	0	Yes
1	1	Yes

4.5 SMBus Address Decode

Address Selection		Binary Value								Hex Value
SADR_tri1	SADR_tri0	7	6	5	4	3	2	1	Rd/Wrt	
0	0	1	1	0	1	1	0	0	0	D8
	M	1	1	0	1	1	0	1	0	DA
	1	1	1	0	1	1	1	1	0	DE
M	0	1	1	0	0	0	0	1	0	C2
	M	1	1	0	0	0	1	0	0	C4
	1	1	1	0	0	0	1	1	0	C6
1	0	1	1	0	0	1	0	1	0	CA
	M	1	1	0	0	1	1	0	0	CC
	1	1	1	0	0	1	1	1	0	CE

4.6 RC19024 SMBus Registers

Table 36. RC19024 SMBus Registers

Byte	Register	Name	Bit	Type	Default	Description	Definition
0	OUTPUT_ENABLE_0	CLK7_EN	[7]	RW	1	Output Enable for CLK7	0 = output is disabled (low/low) 1 = output is enabled
		CLK6_EN	[6]	RW	1	Output Enable for CLK6	
		CLK5_EN	[5]	RW	1	Output Enable for CLK5	
		CLK4_EN	[4]	RW	1	Output Enable for CLK4	
		CLK3_EN	[3]	RW	1	Output Enable for CLK3	
		CLK2_EN	[2]	RW	1	Output Enable for CLK2	
		CLK1_EN	[1]	RW	1	Output Enable for CLK1	
		CLK0_EN	[0]	RW	1	Output Enable for CLK0	
1	OUTPUT_ENABLE_1	CLK15_EN	[7]	RW	1	Output Enable for CLK15	0 = output is disabled (low/low) 1 = output is enabled
		CLK14_EN	[6]	RW	1	Output Enable for CLK14	
		CLK13_EN	[5]	RW	1	Output Enable for CLK13	
		CLK12_EN	[4]	RW	1	Output Enable for CLK12	
		CLK11_EN	[3]	RW	1	Output Enable for CLK11	
		CLK10_EN	[2]	RW	1	Output Enable for CLK10	
		CLK9_EN	[1]	RW	1	Output Enable for CLK9	
		CLK8_EN	[0]	RW	1	Output Enable for CLK8	
2	OUTPUT_ENABLE_2	CLK23_EN	[7]	RW	1	Output Enable for CLK23	0 = output is disabled (low/low) 1 = output is enabled
		CLK22_EN	[6]	RW	1	Output Enable for CLK22	
		CLK21_EN	[5]	RW	1	Output Enable for CLK21	
		CLK20_EN	[4]	RW	1	Output Enable for CLK20	
		CLK19_EN	[3]	RW	1	Output Enable for CLK19	
		CLK18_EN	[2]	RW	1	Output Enable for CLK18	
		CLK17_EN	[1]	RW	1	Output Enable for CLK17	
		CLK16_EN	[0]	RW	1	Output Enable for CLK16	
3	OEb_PIN_READBACK	RESERVED	[7]	RO	0	RESERVED	0 = pin low 1 = pin high
		RB_OEb23	[6]	RO	1'bX	Status of OEb23	
		RB_OEb22	[5]	RO	1'bX	Status of OEb22	
		RB_OEb2	[4]	RO	1'bX	Status of OEb2	
		RB_OEb_D	[3]	RO	1'bX	Status of OEb_D	
		RB_OEb_C	[2]	RO	1'bX	Status of OEb_C	
		RB_OEb_B	[1]	RO	1'bX	Status of OEb_B	
		RB_OEb_A	[0]	RO	1'bX	Status of OEb_A	
4	SBEN_RDBK_ ACP_CONFIG	RESERVED	[7:5]	RW	1'b111	-	-
		ACP_ENABLE	[4]	RW	1	Enable Automatic Clock Parking to low/low when LOS event is detected	0 = disable ACP 1 = enable ACP
		RESERVED	[3:1]	RW	1'b110	-	-
		RB_SBI_ENQ	[0]	RO	1'bX	Status of SBI_ENQ	0 = pin low 1 = pin high

Table 36. RC19024 SMBus Registers (Cont.)

Byte	Register	Name	Bit	Type	Default	Description	Definition
5	VENDOR_REVISION_ID	RID	[7:4]	RO	0x0	REVISION ID, A rev is 0000	-
		VID	[3:0]	RO	0x1	VENDOR ID, ICS/IDT/Renesas	-
6	DEVICE_ID	DEVICE_ID	[7:0]	RO	0x18	Device ID	-
7	BYTE_COUNT	RESERVED	[7:5]	RW	0x0	RESERVED	-
		BC	[4:0]	RW	0x7	Writing to this register configures how many bytes will be read back in a block read.	-
8	SBI_MASK_0	MASK7	[7]	RW	0	Masks off Side-band Disable for CLK7	0 = SBI may disable the output 1 = SBI cannot disable the output
		MASK6	[6]	RW	0	Masks off Side-band Disable for CLK6	
		MASK5	[5]	RW	0	Masks off Side-band Disable for CLK5	
		MASK4	[4]	RW	0	Masks off Side-band Disable for CLK4	
		MASK3	[3]	RW	0	Masks off Side-band Disable for CLK3	
		MASK2	[2]	RW	0	Masks off Side-band Disable for CLK2	
		MASK1	[1]	RW	0	Masks off Side-band Disable for CLK1	
		MASK0	[0]	RW	0	Masks off Side-band Disable for CLK0	
9	SBI_MASK_1	MASK15	[7]	RW	0	Masks off Side-band Disable for CLK15	0 = SBI may disable the output 1 = SBI cannot disable the output
		MASK14	[6]	RW	0	Masks off Side-band Disable for CLK14	
		MASK13	[5]	RW	0	Masks off Side-band Disable for CLK13	
		MASK12	[4]	RW	0	Masks off Side-band Disable for CLK12	
		MASK11	[3]	RW	0	Masks off Side-band Disable for CLK11	
		MASK10	[2]	RW	0	Masks off Side-band Disable for CLK10	
		MASK9	[1]	RW	0	Masks off Side-band Disable for CLK9	
		MASK8	[0]	RW	0	Masks off Side-band Disable for CLK8	

Table 36. RC19024 SMBus Registers (Cont.)

Byte	Register	Name	Bit	Type	Default	Description	Definition
10	SBI_MASK_2	MASK23	[7]	RW	0	Masks off Side-band Disable for CLK23	0 = SBI may disable the output 1 = SBI cannot disable the output
		MASK22	[6]	RW	0	Masks off Side-band Disable for CLK22	
		MASK21	[5]	RW	0	Masks off Side-band Disable for CLK21	
		MASK20	[4]	RW	0	Masks off Side-band Disable for CLK20	
		MASK19	[3]	RW	0	Masks off Side-band Disable for CLK19	
		MASK18	[2]	RW	0	Masks off Side-band Disable for CLK18	
		MASK17	[1]	RW	0	Masks off Side-band Disable for CLK17	
		MASK16	[0]	RW	0	Masks off Side-band Disable for CLK16	
11	SBI_READBACK_0 [1]	SBI_CLK7	[7]	RO	1'bX	Readback of Side-band Disable for CLK7	0 = bit low 1 = bit high
		SBI_CLK6	[6]	RO	1'bX	Readback of Side-band Disable for CLK6	
		SBI_CLK5	[5]	RO	1'bX	Readback of Side-band Disable for CLK5	
		SBI_CLK4	[4]	RO	1'bX	Readback of Side-band Disable for CLK4	
		SBI_CLK3	[3]	RO	1'bX	Readback of Side-band Disable for CLK3	
		SBI_CLK2	[2]	RO	1'bX	Readback of Side-band Disable for CLK2	
		SBI_CLK1	[1]	RO	1'bX	Readback of Side-band Disable for CLK1	
		SBI_CLK0	[0]	RO	1'bX	Readback of Side-band Disable for CLK0	
12	SBI_READBACK_1 [1]	SBI_CLK15	[7]	RO	1'bX	Readback of Side-band Disable for CLK15	0 = bit low 1 = bit high
		SBI_CLK14	[6]	RO	1'bX	Readback of Side-band Disable for CLK14	
		SBI_CLK13	[5]	RO	1'bX	Readback of Side-band Disable for CLK13	
		SBI_CLK12	[4]	RO	1'bX	Readback of Side-band Disable for CLK12	
		SBI_CLK11	[3]	RO	1'bX	Readback of Side-band Disable for CLK11	
		SBI_CLK10	[2]	RO	1'bX	Readback of Side-band Disable for CLK10	
		SBI_CLK9	[1]	RO	1'bX	Readback of Side-band Disable for CLK9	
		SBI_CLK8	[0]	RO	1'bX	Readback of Side-band Disable for CLK8	

Table 36. RC19024 SMBus Registers (Cont.)

Byte	Register	Name	Bit	Type	Default	Description	Definition
13	SBI_READBACK_2 [1]	SBI_CLK23	[7]	RO	1'bX	Readback of Side-band Disable for CLK23	0 = bit low 1 = bit high
		SBI_CLK22	[6]	RO	1'bX	Readback of Side-band Disable for CLK22	
		SBI_CLK21	[5]	RO	1'bX	Readback of Side-band Disable for CLK21	
		SBI_CLK20	[4]	RO	1'bX	Readback of Side-band Disable for CLK20	
		SBI_CLK19	[3]	RO	1'bX	Readback of Side-band Disable for CLK19	
		SBI_CLK18	[2]	RO	1'bX	Readback of Side-band Disable for CLK18	
		SBI_CLK17	[1]	RO	1'bX	Readback of Side-band Disable for CLK17	
		SBI_CLK16	[0]	RO	1'bX	Readback of Side-band Disable for CLK16	
14	OEb_ASSIGNMENT_0	CLK7_OEb_EN	[7]	RW	0	Output Enable by OEb_B	0 = output stop by OEb is disabled 1 = output stop by OEb is enabled
		CLK6_OEb_EN	[6]	RW	1	Output Enable by OEb_B	
		CLK5_OEb_EN	[5]	RW	1	Output Enable by OEb_A	
		CLK4_OEb_EN	[4]	RW	0	Output Enable by OEb_A	
		CLK3_OEb_EN	[3]	RW	0	Output Enable by OEb_A	
		CLK2_OEb_EN	[2]	RW	0	Output Enable by OEb_A	
		CLK1_OEb_EN	[1]	RW	0	Output Enable by OEb_A	
		CLK0_OEb_EN	[0]	RW	0	Output Enable by OEb_A	
15	OEb_ASSIGNMENT_1	CLK15_OEb_EN	[7]	RW	0	Output Enable by OEb_C	0 = output stop by OEb is disabled 1 = output stop by OEb is enabled
		CLK14_OEb_EN	[6]	RW	0	Output Enable by OEb_C	
		CLK13_OEb_EN	[5]	RW	0	Output Enable by OEb_C	
		CLK12_OEb_EN	[4]	RW	0	Output Enable by OEb_C	
		CLK11_OEb_EN	[3]	RW	0	Output Enable by OEb_B	
		CLK10_OEb_EN	[2]	RW	0	Output Enable by OEb_B	
		CLK9_OEb_EN	[1]	RW	0	Output Enable by OEb_B	
		CLK8_OEb_EN	[0]	RW	0	Output Enable by OEb_B	
16	OEb_ASSIGNMENT_2	CLK23_OEb_EN	[7]	RW	0	Output Enable by OEb_D	0 = output stop by OEb is disabled 1 = output stop by OEb is enabled
		CLK22_OEb_EN	[6]	RW	0	Output Enable by OEb_D	
		CLK21_OEb_EN	[5]	RW	0	Output Enable by OEb_D	
		CLK20_OEb_EN	[4]	RW	0	Output Enable by OEb_D	
		CLK19_OEb_EN	[3]	RW	0	Output Enable by OEb_D	
		CLK18_OEb_EN	[2]	RW	1	Output Enable by OEb_D	
		CLK17_OEb_EN	[1]	RW	1	Output Enable by OEb_C	
		CLK16_OEb_EN	[0]	RW	0	Output Enable by OEb_C	
17	LPHCSL_AMP_CTRL	AMP	[7:4]	RW	0x7	Global Differential output Control 0.6V~1V 25mV/step Default = 0.8V	-
		RESERVED	[3:0]	RW	0x7	RESERVED	-

Table 36. RC19024 SMBus Registers (Cont.)

Byte	Register	Name	Bit	Type	Default	Description	Definition
18	PD_RESTORE_LOSb	AC_IN	[7]	RW	0	Enable receiver bias when CLKIN is AC coupled,	0 = DC coupled input 1 = AC coupled input
		Rx_TERM	[6]	RW	0	Enable termination resistors on CLKIN	0 = input termination R is disabled 1 = input termination R is enabled
		RESERVED	[5:4]		1'b11	-	-
		PD_RESTOREb	[3]	RW	1	Save Configuration in Power Down	0 = Config Cleared 1 = Config Saved
		SDATA_TIMEOUT_EN	[2]	RW	1	Enable SMB SDATA time out monitoring	0 = disable SDATA time out 1 = enable SDATA time out
		RESERVED	[1]	RO	1'bX	-	-
		LOSb_RB	[0]	RO	1'bX	real time read back of loss detect block output	0 = LOS event detected 1 = NO LOS event detected.
19	Reserved	RESERVED	[7:0]	RW	0x07	RESERVED	-
20	OUTPUT_SLEW_RATE_0	CLK7_SLEWRATE	[7]	RW	1	CLK7 Slew Rate Control	0 = low slew rate 1 = high slew rate
		CLK6_SLEWRATE	[6]	RW	1	CLK6 Slew Rate Control	
		CLK5_SLEWRATE	[5]	RW	1	CLK5 Slew Rate Control	
		CLK4_SLEWRATE	[4]	RW	1	CLK4 Slew Rate Control	
		CLK3_SLEWRATE	[3]	RW	1	CLK3 Slew Rate Control	
		CLK2_SLEWRATE	[2]	RW	1	CLK2 Slew Rate Control	
		CLK1_SLEWRATE	[1]	RW	1	CLK1 Slew Rate Control	
		CLK0_SLEWRATE	[0]	RW	1	CLK0 Slew Rate Control	
21	OUTPUT_SLEW_RATE_1	CLK15_SLEWRATE	[7]	RW	1	CLK15 Slewrate Control	0 = low slew rate 1 = high slew rate
		CLK14_SLEWRATE	[6]	RW	1	CLK14 Slewrate Control	
		CLK13_SLEWRATE	[5]	RW	1	CLK13 Slewrate Control	
		CLK12_SLEWRATE	[4]	RW	1	CLK12 Slewrate Control	
		CLK11_SLEWRATE	[3]	RW	1	CLK11 Slewrate Control	
		CLK10_SLEWRATE	[2]	RW	1	CLK10 Slewrate Control	
		CLK9_SLEWRATE	[1]	RW	1	CLK9 Slewrate Control	
		CLK8_SLEWRATE	[0]	RW	1	CLK8 Slewrate Control	

Table 36. RC19024 SMBus Registers (Cont.)

Byte	Register	Name	Bit	Type	Default	Description	Definition
22	OUTPUT_SLEW_ RATE_2	CLK23_SLEWRATE	[7]	RW	1	CLK23 Slewrate Control	0 = low slew rate 1 = high slew rate
		CLK22_SLEWRATE	[6]	RW	1	CLK22 Slewrate Control	
		CLK21_SLEWRATE	[5]	RW	1	CLK21 Slewrate Control	
		CLK20_SLEWRATE	[4]	RW	1	CLK20 Slewrate Control	
		CLK19_SLEWRATE	[3]	RW	1	CLK19 Slewrate Control	
		CLK18_SLEWRATE	[2]	RW	1	CLK18 Slewrate Control	
		CLK17_SLEWRATE	[1]	RW	1	CLK17 Slewrate Control	
		CLK16_SLEWRATE	[0]	RW	1	CLK16 Slewrate Control	
23–37	Reserved	RESERVED		RW	0xXX	RESERVED	-
38	WRITE_LOCK_NCLEAR	RESERVED	[7:1]	RW	0x0	RESERVED	-
		WRITE_LOCK	[0]	RW	0	Non-clearable SMBus Write Lock bit. When written to one, the SMBus control registers cannot be written to. This bit can only be cleared by cycling power.	0 = SMBus not locked for writing by this bit. See WRITE_LOCK_RW 1C bit. 1 = SMBus locked for writing
39	WRITE_LOCK_CLEAR_ LOS_EVENT	RESERVED	[7:2]	RW1C	1'b111000	-	-
		LOS_EVT	[1]	RW1C	0	LOS Event Status When high, indicates that a LOS event was detected. Can be cleared by writing a 1 to it.	0 = No LOS event detected 1 = LOS event detected.
		WRITE_LOCK_RW1C	[0]	RW1C	0	Clearable SMBus Write Lock bit. When written to one, the SMBus control registers cannot be written to. This bit can be cleared by writing a 1 to it.	0 = SMBus not locked for writing by this bit. See WRITE_LOCK bit. 1 = SMBus locked for writing

1. Register only valid when the Side-Band Interface is enabled (SBI_ENQ = 1).

4.7 RC19020 SMBus Registers

Table 37. RC19020 SMBus Registers

Byte	Register	Name	Bit	Type	Default	Description	Definition
0	OUTPUT_ENABLE_2	RESERVED	[7]	RW	0	RESERVED	0 = output is disabled (low/low) 1 = output is enabled
		CLK19_EN	[6]	RW	1	Output Enable for CLK19	
		CLK18_EN	[5]	RW	1	Output Enable for CLK18	
		CLK17_EN	[4]	RW	1	Output Enable for CLK17	
		CLK16_EN	[3]	RW	1	Output Enable for CLK16	
		RESERVED	[2:0]	RW	1	RESERVED	
1	OUTPUT_ENABLE_0	CLK7_EN	[7]	RW	1	Output Enable for CLK7	0 = output is disabled (low/low) 1 = output is enabled
		CLK6_EN	[6]	RW	1	Output Enable for CLK6	
		CLK5_EN	[5]	RW	1	Output Enable for CLK5	
		CLK4_EN	[4]	RW	1	Output Enable for CLK4	
		CLK3_EN	[3]	RW	1	Output Enable for CLK3	
		CLK2_EN	[2]	RW	1	Output Enable for CLK2	
		CLK1_EN	[1]	RW	1	Output Enable for CLK1	
		CLK0_EN	[0]	RW	1	Output Enable for CLK0	
2	OUTPUT_ENABLE_1	CLK15_EN	[7]	RW	1	Output Enable for CLK15	0 = output is disabled (low/low) 1 = output is enabled
		CLK14_EN	[6]	RW	1	Output Enable for CLK14	
		CLK13_EN	[5]	RW	1	Output Enable for CLK13	
		CLK12_EN	[4]	RW	1	Output Enable for CLK12	
		CLK11_EN	[3]	RW	1	Output Enable for CLK11	
		CLK10_EN	[2]	RW	1	Output Enable for CLK10	
		CLK9_EN	[1]	RW	1	Output Enable for CLK9	
		CLK8_EN	[0]	RW	1	Output Enable for CLK8	
3	OEb_PIN_READBACK	RB_OEb_12	[7]	RO	1'bX	Status of OEb12	0 = pin low 1 = pin high
		RB_OEb_11	[6]	RO	1'bX	Status of OEb11	
		RB_OEb_10	[5]	RO	1'bX	Status of OEb10	
		RB_OEb_9	[4]	RO	1'bX	Status of OEb9	
		RB_OEb_8	[3]	RO	1'bX	Status of OEb8	
		RB_OEb_7	[2]	RO	1'bX	Status of OEb7	
		RB_OEb_6	[1]	RO	1'bX	Status of OEb6	
		RB_OEb_5	[0]	RO	1'bX	Status of OEb5	
4	SBEN_RDBK_ ACP_CONFIG	RESERVED	[7:5]	RW	1'b111	RESERVED	-
		ACP_ENABLE	[4]	RW	1	Enable Automatic Clock Parking to low/low when LOS event is detected	0 = disable ACP 1 = enable ACP
		RESERVED	[3:1]	RW	1'b110	RESERVED	-
		RB_SBI_ENQ	[0]	RO	1'bX	Status of SBI_ENQ	0 = pin low 1 = pin high
5	VENDOR_REVISION_ID	RID	[7:4]	RO	0x2	REVISION ID, A rev is 0000	-
		VID	[3:0]	RO	0x1	VENDOR ID, ICS/IDT/Renesas	-

Table 37. RC19020 SMBus Registers (Cont.)

Byte	Register	Name	Bit	Type	Default	Description	Definition
6	DEVICE_ID	DEVICE_ID	[7:0]	RO	0xC9	Device ID	-
7	BYTE_COUNT	RESERVED	[7:5]	RW	0x0	RESERVED	-
		BC	[4:0]	RW	0x7	Writing to this register configures how many bytes will be read back in a block read.	-
8	SBI_MASK_0	MASK7	[7]	RW	0	Masks off Side-band Disable for CLK7	0 = SBI may disable the output 1 = SBI cannot disable the output
		MASK6	[6]	RW	0	Masks off Side-band Disable for CLK6	
		MASK5	[5]	RW	0	Masks off Side-band Disable for CLK5	
		MASK4	[4]	RW	0	Masks off Side-band Disable for CLK4	
		MASK3	[3]	RW	0	Masks off Side-band Disable for CLK3	
		MASK2	[2]	RW	0	Masks off Side-band Disable for CLK2	
		MASK1	[1]	RW	0	Masks off Side-band Disable for CLK1	
		MASK0	[0]	RW	0	Masks off Side-band Disable for CLK0	
9	SBI_MASK_1	MASK15	[7]	RW	0	Masks off Side-band Disable for CLK15	0 = SBI may disable the output 1 = SBI cannot disable the output
		MASK14	[6]	RW	0	Masks off Side-band Disable for CLK14	
		MASK13	[5]	RW	0	Masks off Side-band Disable for CLK13	
		MASK12	[4]	RW	0	Masks off Side-band Disable for CLK12	
		MASK11	[3]	RW	0	Masks off Side-band Disable for CLK11	
		MASK10	[2]	RW	0	Masks off Side-band Disable for CLK10	
		MASK9	[1]	RW	0	Masks off Side-band Disable for CLK9	
		MASK8	[0]	RW	0	Masks off Side-band Disable for CLK8	
10	SBI_MASK_2	RESERVED	[7:4]	RW	0	RESERVED	-
		MASK19	[3]	RW	0	Masks off Side-band Disable for CLK19	0 = SBI may disable the output 1 = SBI cannot disable the output
		MASK18	[2]	RW	0	Masks off Side-band Disable for CLK18	
		MASK17	[1]	RW	0	Masks off Side-band Disable for CLK17	
		MASK16	[0]	RW	0	Masks off Side-band Disable for CLK16	

Table 37. RC19020 SMBus Registers (Cont.)

Byte	Register	Name	Bit	Type	Default	Description	Definition
11	OUTPUT_SLEW_ RATE_0	CLK7_SLEWRATE	[7]	RW	1	CLK7 Slewrate Control	0 = low slew rate 1 = high slew rate
		CLK6_SLEWRATE	[6]	RW	1	CLK6 Slewrate Control	
		CLK5_SLEWRATE	[5]	RW	1	CLK5 Slewrate Control	
		CLK4_SLEWRATE	[4]	RW	1	CLK4 Slewrate Control	
		CLK3_SLEWRATE	[3]	RW	1	CLK3 Slewrate Control	
		CLK2_SLEWRATE	[2]	RW	1	CLK2 Slewrate Control	
		CLK1_SLEWRATE	[1]	RW	1	CLK1 Slewrate Control	
		CLK0_SLEWRATE	[0]	RW	1	CLK0 Slewrate Control	
12	OUTPUT_SLEW_ RATE_1	CLK15_SLEWRATE	[7]	RW	1	CLK15 Slewrate Control	0 = low slew rate 1 = high slew rate
		CLK14_SLEWRATE	[6]	RW	1	CLK14 Slewrate Control	
		CLK13_SLEWRATE	[5]	RW	1	CLK13 Slewrate Control	
		CLK12_SLEWRATE	[4]	RW	1	CLK12 Slewrate Control	
		CLK11_SLEWRATE	[3]	RW	1	CLK11 Slewrate Control	
		CLK10_SLEWRATE	[2]	RW	1	CLK10 Slewrate Control	
		CLK9_SLEWRATE	[1]	RW	1	CLK9 Slewrate Control	
		CLK8_SLEWRATE	[0]	RW	1	CLK8 Slewrate Control	
13	OUTPUT_SLEW_ RATE_2	RESERVED	[7:4]	RW	0b111	RESERVED	0 = low slew rate 1 = high slew rate
		CLK19_SLEWRATE	[3]	RW	1	CLK19 Slewrate Control	
		CLK18_SLEWRATE	[2]	RW	1	CLK18 Slewrate Control	
		CLK17_SLEWRATE	[1]	RW	1	CLK17 Slewrate Control	
		CLK16_SLEWRATE	[0]	RW	1	CLK16 Slewrate Control	
14 - 19	RESERVED	-	-	-	-	RESERVED	-
20	LPHCSL_AMP_CTRL	AMP	[7:4]	RW	0x7	Global Differential output Control 0.6V~1V 25mV/step Default = 0.8V	-
		RESERVED	[3:0]	RW	0x7	RESERVED	-

Table 37. RC19020 SMBus Registers (Cont.)

Byte	Register	Name	Bit	Type	Default	Description	Definition
21	PD_RESTORE_LOSb	AC_IN	[7]	RW	0	Enable receiver bias when CLKIN is AC coupled,	0 = DC coupled input 1 = AC coupled input
		Rx_TERM	[6]	RW	0	Enable termination resistors on CLKIN	0 = input termination R is disabled 1 = input termination R is enabled
		RESERVED	[5:4]	-	1'b11	-	-
		PD_RESTOREb	[3]	RW	1	Save Configuration in Power Down	0 = Config Cleared 1 = Config Saved
		SDATA_TIMEOUT_EN	[2]	RW	1	Enable SMB SDATA time out monitoring	0 = disable SDATA time out 1 = enable SDATA time out
		RESERVED	[1]	RO	1'bX	-	-
		LOSb_RB	[0]	RO	1'bX	real time read back of loss detect block output	0 = LOS event detected 1 = NO LOS event detected.
22-32	RESERVED	RESERVED	[7:0]	RW	0xXX	RESERVED	-
33	SBI_READBACK_0 [1]	SBI_CLK7	[7]	RO	1'bX	Readback of Side-band Disable for CLK7	0 = bit low 1 = bit high
		SBI_CLK6	[6]	RO	1'bX	Readback of Side-band Disable for CLK6	
		SBI_CLK5	[5]	RO	1'bX	Readback of Side-band Disable for CLK5	
		SBI_CLK4	[4]	RO	1'bX	Readback of Side-band Disable for CLK4	
		SBI_CLK3	[3]	RO	1'bX	Readback of Side-band Disable for CLK3	
		SBI_CLK2	[2]	RO	1'bX	Readback of Side-band Disable for CLK2	
		SBI_CLK1	[1]	RO	1'bX	Readback of Side-band Disable for CLK1	
		SBI_CLK0	[0]	RO	1'bX	Readback of Side-band Disable for CLK0	

Table 37. RC19020 SMBus Registers (Cont.)

Byte	Register	Name	Bit	Type	Default	Description	Definition
34	SBI_READBACK_1 [1]	SBI_CLK15	[7]	RO	1'bX	Readback of Side-band Disable for CLK15	0 = bit low 1 = bit high
		SBI_CLK14	[6]	RO	1'bX	Readback of Side-band Disable for CLK14	
		SBI_CLK13	[5]	RO	1'bX	Readback of Side-band Disable for CLK13	
		SBI_CLK12	[4]	RO	1'bX	Readback of Side-band Disable for CLK12	
		SBI_CLK11	[3]	RO	1'bX	Readback of Side-band Disable for CLK11	
		SBI_CLK10	[2]	RO	1'bX	Readback of Side-band Disable for CLK10	
		SBI_CLK9	[1]	RO	1'bX	Readback of Side-band Disable for CLK9	
		SBI_CLK8	[0]	RO	1'bX	Readback of Side-band Disable for CLK8	
35	SBI_READBACK_2 [1]	RESERVED	[7:4]	RO	1'bXXX	RESERVED	0 = bit low 1 = bit high
		SBI_CLK19	[3]	RO	1'bX	Readback of Side-band Disable for CLK19	
		SBI_CLK18	[2]	RO	1'bX	Readback of Side-band Disable for CLK18	
		SBI_CLK17	[1]	RO	1'bX	Readback of Side-band Disable for CLK17	
		SBI_CLK16	[0]	RO	1'bX	Readback of Side-band Disable for CLK16	
36-37	RESERVED	RESERVED	[7:0]	RW	0xXX	RESERVED	RESERVED
38	WRITE_LOCK_NCLEAR	RESERVED	[7:1]	RW	0x0	RESERVED	-
		WRITE_LOCK	[0]	RW	0	Non-clearable SMBus Write Lock bit. When written to one, the SMBus control registers cannot be written to. This bit can only be cleared by cycling power.	0 = SMBus not locked for writing by this bit. See WRITE_LOCK_RW 1C bit. 1 = SMBus locked for writing
39	WRITE_LOCK_CLEAR_ LOS_EVENT	RESERVED	[7:2]	RW1C	1'b111000	-	-
		LOS_EVT	[1]	RW1C	0	LOS Event Status When high, indicates that a LOS event was detected. Can be cleared by writing a 1 to it.	0 = No LOS event detected 1 = LOS event detected.
		WRITE_LOCK_RW1C	[0]	RW1C	0	Clearable SMBus Write Lock bit. When written to one, the SMBus control registers cannot be written to. This bit can be cleared by writing a 1 to it.	0 = SMBus not locked for writing by this bit. See WRITE_LOCK bit. 1 = SMBus locked for writing

1. Register only valid when the Side-Band Interface is enabled (SBI_ENQ = 1).

4.8 RC19020A072 SMBus Registers

Table 38. RC19020A072 SMBus Registers

Byte	Register	Name	Bit	Type	Default	Description	Definition
0	OUTPUT_ENABLE_2	RESERVED	[7]	RW	0	RESERVED	0 = output is disabled (low/low) 1 = output is enabled
		CLK19_EN	[6]	RW	1	Output Enable for CLK19	
		CLK18_EN	[5]	RW	1	Output Enable for CLK18	
		CLK17_EN	[4]	RW	1	Output Enable for CLK17	
		CLK16_EN	[3]	RW	1	Output Enable for CLK16	
		RESERVED	[2:0]	RW	0	RESERVED	
1	OUTPUT_ENABLE_0	CLK7_EN	[7]	RW	1	Output Enable for CLK7	0 = output is disabled (low/low) 1 = output is enabled
		CLK6_EN	[6]	RW	1	Output Enable for CLK6	
		CLK5_EN	[5]	RW	1	Output Enable for CLK5	
		CLK4_EN	[4]	RW	1	Output Enable for CLK4	
		CLK3_EN	[3]	RW	1	Output Enable for CLK3	
		CLK2_EN	[2]	RW	1	Output Enable for CLK2	
		CLK1_EN	[1]	RW	1	Output Enable for CLK1	
		CLK0_EN	[0]	RW	1	Output Enable for CLK0	
2	OUTPUT_ENABLE_1	CLK15_EN	[7]	RW	1	Output Enable for CLK15	0 = output is disabled (low/low) 1 = output is enabled
		CLK14_EN	[6]	RW	1	Output Enable for CLK14	
		CLK13_EN	[5]	RW	1	Output Enable for CLK13	
		CLK12_EN	[4]	RW	1	Output Enable for CLK12	
		CLK11_EN	[3]	RW	1	Output Enable for CLK11	
		CLK10_EN	[2]	RW	1	Output Enable for CLK10	
		CLK9_EN	[1]	RW	1	Output Enable for CLK9	
		CLK8_EN	[0]	RW	1	Output Enable for CLK8	
3	OEb_PIN_READBACK	RB_OEb_12	[7]	RO	1'bX	Status of OEb12	0 = pin low 1 = pin high
		RB_OEb_11	[6]	RO	1'bX	Status of OEb11	
		RB_OEb_10 [1]	[5]	RO	1'bX	Status of OEb10	
		RB_OEb_9	[4]	RO	1'bX	Status of OEb9	
		RB_OEb_8	[3]	RO	1'bX	Status of OEb8	
		RB_OEb_7	[2]	RO	1'bX	Status of OEb7	
		RB_OEb_6 [1]	[1]	RO	1'bX	Status of OEb6	
		RB_OEb_5 [1]	[0]	RO	1'bX	Status of OEb5	
4	SBEN_RDBK_ ACP_CONFIG	RESERVED	[7:5]	RW	1'b111	RESERVED	-
		ACP_ENABLE	[4]	RW	1	Enable Automatic Clock Parking to low/low when LOS event is detected	0 = disable ACP 1 = enable ACP
		RESERVED	[3:1]	RW	1'b110	RESERVED	-
		RB_SBI_ENQ	[0]	RO	1'bX	Status of SBI_ENQ	0 = pin low 1 = pin high
5	VENDOR_REVISION_ID	RID	[7:4]	RO	0x0	REVISION ID, A rev is 0000	-
		VID	[3:0]	RO	0x1	VENDOR ID, ICS/IDT/Renesas	-

Table 38. RC19020A072 SMBus Registers (Cont.)

Byte	Register	Name	Bit	Type	Default	Description	Definition
6	DEVICE_ID	DEVICE_ID	[7:0]	RO	0xC8	Device ID	-
7	BYTE_COUNT	RESERVED	[7:5]	RW	0x0	RESERVED	-
		BC	[4:0]	RW	0x8	Writing to this register configures how many bytes will be read back in a block read	-
8	OEb_Configuration_A	CFGA_OEb12	[7]	RW	1	Controls CLK12	0 = OEb does not control output 1 = OEb controls output
		CFGA_OEb11	[6]	RW	1	Controls CLK11	
		CFGA_OEb10	[5]	RW	1	Controls CLK10 when SBI_ENQ = 0	
		CFGA_OEb9	[4]	RW	1	Controls CLK9	
		CFGA_OEb8	[3]	RW	1	Controls CLK8	
		CFGA_OEb7	[2]	RW	1	Controls CLK7	
		CFGA_OEb6	[1]	RW	1	Controls CLK6 when SBI_ENQ = 0	
		CFGA_OEb5	[0]	RW	1	Controls CLK5 when SBI_ENQ = 0	
9	OEb_Configuration_B	CFGB_OEb12	[7]	RW	0	Controls CLK13	0 = OEb does not control output 1 = OEb controls output
		CFGB_OEb11	[6]	RW	0	Controls CLK14	
		CFGB_OEb10	[5]	RW	0	Controls CLK15 when SBI_ENQ = 0	
		CFGB_OEb9	[4]	RW	0	Controls CLK0	
		CFGB_OEb8	[3]	RW	0	Controls CLK1	
		CFGB_OEb7	[2]	RW	0	Controls CLK2	
		CFGB_OEb6	[1]	RW	0	Controls CLK3 when SBI_ENQ = 0	
		CFGB_OEb5	[0]	RW	0	Controls CLK4 when SBI_ENQ = 0	
10	OEb_Configuration_C_ AMP_Control_	CFGC_OEb12	[7]	RW	0	Controls CLK16	0 = OEb does not control output 1 = OEb controls output
		CFGC_OEb11	[6]	RW	0	Controls CLK17	
		CFGC_OEb10	[5	RW	0	Controls CLK18 when SBI_EN = 0	
		CFGC_OEb9	[4]	RW	0	Controls CLK19	
		AMPLITUDE_CTRL	[3:0]	RW	0x7	Global Differential output Control 0.6V~1V 25mV/step Default = 0.8V	-
11	OUTPUT_SLEW_ RATE_0	CLK7_SLEWRATE	[7]	RW	1	CLK7 Slewrate Control	0 = low slew rate 1 = high slew rate
		CLK6_SLEWRATE	[6]	RW	1	CLK6 Slewrate Control	
		CLK5_SLEWRATE	[5]	RW	1	CLK5 Slewrate Control	
		CLK4_SLEWRATE	[4]	RW	1	CLK4 Slewrate Control	
		CLK3_SLEWRATE	[3]	RW	1	CLK3 Slewrate Control	
		CLK2_SLEWRATE	[2]	RW	1	CLK2 Slewrate Control	
		CLK1_SLEWRATE	[1]	RW	1	CLK1 Slewrate Control	
		CLK0_SLEWRATE	[0]	RW	1	CLK0 Slewrate Control	

Table 38. RC19020A072 SMBus Registers (Cont.)

Byte	Register	Name	Bit	Type	Default	Description	Definition
12	OUTPUT_SLEW_ RATE_1	CLK15_SLEWRATE	[7]	RW	1	CLK15 Slewrate Control	0 = low slew rate 1 = high slew rate
		CLK14_SLEWRATE	[6]	RW	1	CLK14 Slewrate Control	
		CLK13_SLEWRATE	[5]	RW	1	CLK13 Slewrate Control	
		CLK12_SLEWRATE	[4]	RW	1	CLK12 Slewrate Control	
		CLK11_SLEWRATE	[3]	RW	1	CLK11 Slewrate Control	
		CLK10_SLEWRATE	[2]	RW	1	CLK10 Slewrate Control	
		CLK9_SLEWRATE	[1]	RW	1	CLK9 Slewrate Control	
		CLK8_SLEWRATE	[0]	RW	1	CLK8 Slewrate Control	
13	OUTPUT_SLEW_ RATE_2	RESERVED	[7:4]	RW	0b111	RESERVED	0 = low slew rate 1 = high slew rate
		CLK19_SLEWRATE	[3]	RW	1	CLK19 Slewrate Control	
		CLK18_SLEWRATE	[2]	RW	1	CLK18 Slewrate Control	
		CLK17_SLEWRATE	[1]	RW	1	CLK17 Slewrate Control	
		CLK16_SLEWRATE	[0]	RW	1	CLK16 Slewrate Control	
14 - 20	RESERVED	-	-	-	-	RESERVED	-
21	PD_RESTORE_LOSb	AC_IN	[7]	RW	0	Enable receiver bias when CLKIN is AC coupled,	0 = DC coupled input 1 = AC coupled input
		Rx_TERM	[6]	RW	0	Enable termination resistors on CLKIN	0 = input termination R is disabled 1 = input termination R is enabled
		RESERVED	[5]	RW	1'b1	RESERVED	-
		CLK Acquired	[4]	RO	1'bX	A clock was acquired	1 = clock acquired
		PD_RESTOREb	[3]	RW	1	Save Configuration in Power Down	0 = Config Cleared 1 = Config Saved
		SDATA_TIMEOUT_EN	[2]	RW	1	Enable SMB SDATA time out monitoring	0 = disable SDATA time out 1 = enable SDATA time out
		RESERVED	[1]	RO	1'bX	-	-
		LOSb_RB	[0]	RO	1'bX	Real time read back of loss detect block output	0 = LOS event detected 1 = NO LOS event detected.

Table 38. RC19020A072 SMBus Registers (Cont.)

Byte	Register	Name	Bit	Type	Default	Description	Definition
22	SBI_MASK_0 [2]	MASK7	[7]	RW	0	Masks off Side-band Disable for CLK7	0 = SBI may disable the output 1 = SBI cannot disable the output
		MASK6	[6]	RW	0	Masks off Side-band Disable for CLK6	
		MASK5	[5]	RW	0	Masks off Side-band Disable for CLK5	
		MASK4	[4]	RW	0	Masks off Side-band Disable for CLK4	
		MASK3	[3]	RW	0	Masks off Side-band Disable for CLK3	
		MASK2	[2]	RW	0	Masks off Side-band Disable for CLK2	
		MASK1	[1]	RW	0	Masks off Side-band Disable for CLK1	
		MASK0	[0]	RW	0	Masks off Side-band Disable for CLK0	
23	SBI_MASK_1 [2]	MASK15	[7]	RW	0	Masks off Side-band Disable for CLK15	0 = SBI may disable the output 1 = SBI cannot disable the output
		MASK14	[6]	RW	0	Masks off Side-band Disable for CLK14	
		MASK13	[5]	RW	0	Masks off Side-band Disable for CLK13	
		MASK12	[4]	RW	0	Masks off Side-band Disable for CLK12	
		MASK11	[3]	RW	0	Masks off Side-band Disable for CLK11	
		MASK10	[2]	RW	0	Masks off Side-band Disable for CLK10	
		MASK9	[1]	RW	0	Masks off Side-band Disable for CLK9	
		MASK8	[0]	RW	0	Masks off Side-band Disable for CLK8	
24	SBI_MASK_2 [2]	MASK23	[7]	RW	0	Masks off Side-band Disable for CLK23	0 = SBI may disable the output 1 = SBI cannot disable the output
		MASK22	[6]	RW	0	Masks off Side-band Disable for CLK22	
		MASK21	[5]	RW	0	Masks off Side-band Disable for CLK21	
		MASK20	[4]	RW	0	Masks off Side-band Disable for CLK20	
		MASK19	[3]	RW	0	Masks off Side-band Disable for CLK19	
		MASK18	[2]	RW	0	Masks off Side-band Disable for CLK18	
		MASK17	[1]	RW	0	Masks off Side-band Disable for CLK17	
		MASK16	[0]	RW	0	Masks off Side-band Disable for CLK16	
25–32	RESERVED	RESERVED	[7:0]	RW	0xXX	RESERVED	-

Table 38. RC19020A072 SMBus Registers (Cont.)

Byte	Register	Name	Bit	Type	Default	Description	Definition
33	SBI_READBACK_0 [2]	SBI_CLK7	[7]	RO	1'bX	Readback of Side-band Disable for CLK7	0 = bit low 1 = bit high
		SBI_CLK6	[6]	RO	1'bX	Readback of Side-band Disable for CLK6	
		SBI_CLK5	[5]	RO	1'bX	Readback of Side-band Disable for CLK5	
		SBI_CLK4	[4]	RO	1'bX	Readback of Side-band Disable for CLK4	
		SBI_CLK3	[3]	RO	1'bX	Readback of Side-band Disable for CLK3	
		SBI_CLK2	[2]	RO	1'bX	Readback of Side-band Disable for CLK2	
		SBI_CLK1	[1]	RO	1'bX	Readback of Side-band Disable for CLK1	
		SBI_CLK0	[0]	RO	1'bX	Readback of Side-band Disable for CLK0	
34	SBI_READBACK_1 [2]	SBI_CLK15	[7]	RO	1'bX	Readback of Side-band Disable for CLK15	0 = bit low 1 = bit high
		SBI_CLK14	[6]	RO	1'bX	Readback of Side-band Disable for CLK14	
		SBI_CLK13	[5]	RO	1'bX	Readback of Side-band Disable for CLK13	
		SBI_CLK12	[4]	RO	1'bX	Readback of Side-band Disable for CLK12	
		SBI_CLK11	[3]	RO	1'bX	Readback of Side-band Disable for CLK11	
		SBI_CLK10	[2]	RO	1'bX	Readback of Side-band Disable for CLK10	
		SBI_CLK9	[1]	RO	1'bX	Readback of Side-band Disable for CLK9	
		SBI_CLK8	[0]	RO	1'bX	Readback of Side-band Disable for CLK8	
35	SBI_READBACK_2 [2]	RESERVED	[7:4]	RO	1'bXXX	RESERVED	0 = bit low 1 = bit high
		SBI_CLK19	[3]	RO	1'bX	Readback of Side-band Disable for CLK19	
		SBI_CLK18	[2]	RO	1'bX	Readback of Side-band Disable for CLK18	
		SBI_CLK17	[1]	RO	1'bX	Readback of Side-band Disable for CLK17	
		SBI_CLK16	[0]	RO	1'bX	Readback of Side-band Disable for CLK16	
36-37	RESERVED	RESERVED	[7:0]	RW	0xXX	RESERVED	RESERVED
38	WRITE_LOCK_NCLEAR	RESERVED	[7:1]	RW	0x0	RESERVED	-
		WRITE_LOCK	[0]	RW	0	Non-clearable SMBus Write Lock bit. Once written to '1', the SMBus control registers cannot be written to. This bit can only be cleared by cycling power.	0 = SMBus not locked for writing by this bit. See WRITE_LOCK_RW 1C bit. 1 = SMBus locked for writing

Table 38. RC19020A072 SMBus Registers (Cont.)

Byte	Register	Name	Bit	Type	Default	Description	Definition
39	WRITE_LOCK_CLEAR_LOS_EVENT	RESERVED	[7:2]	RW1C	1'b111000	-	-
		LOS_EVT	[1]	RW1C	0	LOS Event Status When high, indicates that a LOS event was detected. Can be cleared by writing a 1 to it.	0 = No LOS event detected 1 = LOS event detected.
		WRITE_LOCK_RW1C	[0]	RW1C	0	Clearable SMBus Write Lock bit. When written to one, other SMBus control registers cannot be written to. This bit can be cleared by writing a 1 to it.	0 = SMBus not locked for writing by this bit. See WRITE_LOCK bit. 1 = SMBus locked for writing

1. Register is only valid when the Side-Band Interface is not enabled (SBI_ENQ = 0).
2. Register only valid when the Side-Band Interface is enabled (SBI_ENQ = 1).

4.9 RC19016/013/008/004 SMBus Registers

Table 39. RC19016/013/008/004 SMBus Registers

Byte	Register	Name	Bit	Type	Default	Description	Definition
0	OUTPUT_ENABLE_0	CLK7_EN	[7]	RW	1	Output Enable Bit for CLK7	0 = output is disabled (low/low) 1 = output is enabled
		CLK6_EN	[6]	RW	1	Output Enable Bit for CLK6	
		CLK5_EN	[5]	RW	1	Output Enable Bit for CLK5	
		CLK4_EN	[4]	RW	1	Output Enable Bit for CLK4	
		CLK3_EN	[3]	RW	1	Output Enable Bit for CLK3	
		CLK2_EN	[2]	RW	1	Output Enable Bit for CLK2	
		CLK1_EN	[1]	RW	1	Output Enable Bit for CLK1	
		CLK0_EN	[0]	RW	1	Output Enable Bit for CLK0	
1	OUTPUT_ENABLE_1	CLK15_EN	[7]	RW	1	Output Enable Bit for CLK15	0 = output is disabled (low/low) 1 = output is enabled
		CLK14_EN	[6]	RW	1	Output Enable Bit for CLK14	
		CLK13_EN	[5]	RW	1	Output Enable Bit for CLK13	
		CLK12_EN	[4]	RW	1	Output Enable Bit for CLK12	
		CLK11_EN	[3]	RW	1	Output Enable Bit for CLK11	
		CLK10_EN	[2]	RW	1	Output Enable Bit for CLK10	
		CLK9_EN	[1]	RW	1	Output Enable Bit for CLK9	
		CLK8_EN	[0]	RW	1	Output Enable Bit for CLK8	
2	OEb_PIN_READBACK_0	OE7b_Readback	[7]	RO	pin	Status of OE7b pin	0 = OEb pin low 1 = OEb Pin high
		OE6b_Readback	[6]	RO	pin	Status of OE6b pin	
		OE5b_Readback	[5]	RO	pin	Status of OE5b pin	
		OE4b_Readback	[4]	RO	pin	Status of OE4b pin	
		OE3b_Readback	[3]	RO	pin	Status of OE3b pin	
		OE2b_Readback	[2]	RO	pin	Status of OE2b pin	
		OE1b_Readback	[1]	RO	pin	Status of OE1b pin	
		OE0b_Readback	[0]	RO	pin	Status of OE0b pin	

Table 39. RC19016/013/008/004 SMBus Registers (Cont.)

Byte	Register	Name	Bit	Type	Default	Description	Definition
3	OEb_PIN_READBACK_1	OE15b_Readback	[7]	RO	pin	Status of OE15b pin	0 = OEb pin low 1 = OEb Pin high
		OE14b_Readback	[6]	RO	pin	Status of OE14b pin	
		OE13b_Readback	[5]	RO	pin	Status of OE13b pin	
		OE12b_Readback	[4]	RO	pin	Status of OE12b pin	
		OE11b_Readback	[3]	RO	pin	Status of OE11b pin	
		OE10b_Readback	[2]	RO	pin	Status of OE10b pin	
		OE9b_Readback	[1]	RO	pin	Status of OE9b pin	
		OE8b_Readback	[0]	RO	pin	Status of OE8b pin	
4	SBEN_RDBK_ LOS_CONFIG	RESERVED	[7:5]	-	-	-	-
		LOSb_ACP_ENABLE	[4]	RW	1	Enable input loss detect to park outputs low/low	0 = disable, 1 = enable
		RESERVED	[3:2]	-	-	-	-
		RESERVED	[1]	-	-	-	-
		RB_SBI_EN	[0]	RO	pin	Status of SBI_EN	0 = pin low 1 = pin high
5	VENDOR_REVISION_ ID	RID	[7:4]	RO	0x0	REVISION ID, A rev is 0000	-
		VID	[3:0]	RO	0x1	VENDOR ID, ICS/IDT/Renesas	-
6	DEVICE_ID	DEVICE_ID	[7:0]	RO	0x18	Device ID: RC19016 = 0h10, RC19013 = 0h0D, RC19008 = 0h08, RC19004 = 0h04, RC19016A100 = 0h90, RC19013A100 = 0h8D, RC19008A100 = 0h88, RC19004A100 = 0h84	-
7	BYTE_COUNT	RESERVED	[7:5]	-	-	-	-
		BC	[4:0]	RW	0x7	Writing to this register configures how many bytes will be read back in a block read.	-
8	SBI_MASK_0 (Register only functional and/or valid when SBEN = 1)	MASK7	[7]	RW	0	Masks off Side-band Disable for CLK7	0 = SBI may disable the output 1 = SBI cannot disable the output
		MASK6	[6]	RW	0	Masks off Side-band Disable for CLK6	
		MASK5	[5]	RW	0	Masks off Side-band Disable for CLK5	
		MASK4	[4]	RW	0	Masks off Side-band Disable for CLK4	
		MASK3	[3]	RW	0	Masks off Side-band Disable for CLK3	
		MASK2	[2]	RW	0	Masks off Side-band Disable for CLK2	
		MASK1	[1]	RW	0	Masks off Side-band Disable for CLK1	
		MASK0	[0]	RW	0	Masks off Side-band Disable for CLK0	

Table 39. RC19016/013/008/004 SMBus Registers (Cont.)

Byte	Register	Name	Bit	Type	Default	Description	Definition
9	SBI_MASK_1 (Register only functional and/or valid when SBEN = 1)	MASK15	[7]	RW	0	Masks off Side-band Disable for CLK15	0 = SBI may disable the output 1 = SBI cannot disable the output
		MASK14	[6]	RW	0	Masks off Side-band Disable for CLK14	
		MASK13	[5]	RW	0	Masks off Side-band Disable for CLK13	
		MASK12	[4]	RW	0	Masks off Side-band Disable for CLK12	
		MASK11	[3]	RW	0	Masks off Side-band Disable for CLK11	
		MASK10	[2]	RW	0	Masks off Side-band Disable for CLK10	
		MASK9	[1]	RW	0	Masks off Side-band Disable for CLK9	
		MASK8	[0]	RW	0	Masks off Side-band Disable for CLK8	
10	RESERVED	Reserved	[7:0]	-	-	-	-
11	SBI_READBACK_0 (Register only functional and/or valid when SBEN = 1)	SBI_CLK7	[7]	RO	X	Readback of Side-band Disable for CLK7	0 = bit low 1 = bit high
		SBI_CLK6	[6]	RO	X	Readback of Side-band Disable for CLK6	
		SBI_CLK5	[5]	RO	X	Readback of Side-band Disable for CLK5	
		SBI_CLK4	[4]	RO	X	Readback of Side-band Disable for CLK4	
		SBI_CLK3	[3]	RO	X	Readback of Side-band Disable for CLK3	
		SBI_CLK2	[2]	RO	X	Readback of Side-band Disable for CLK2	
		SBI_CLK1	[1]	RO	X	Readback of Side-band Disable for CLK1	
		SBI_CLK0	[0]	RO	X	Readback of Side-band Disable for CLK0	
12	SBI_READBACK_1 (Register only functional and/or valid when SBEN = 1)	SBI_CLK15	[7]	RO	X	Readback of Side-band Disable for CLK15	0 = bit low 1 = bit high
		SBI_CLK14	[6]	RO	X	Readback of Side-band Disable for CLK14	
		SBI_CLK13	[5]	RO	X	Readback of Side-band Disable for CLK13	
		SBI_CLK12	[4]	RO	X	Readback of Side-band Disable for CLK12	
		SBI_CLK11	[3]	RO	X	Readback of Side-band Disable for CLK11	
		SBI_CLK10	[2]	RO	X	Readback of Side-band Disable for CLK10	
		SBI_CLK9	[1]	RO	X	Readback of Side-band Disable for CLK9	
		SBI_CLK8	[0]	RO	X	Readback of Side-band Disable for CLK8	
13-16	RESERVED	Reserved	[7:0]	-	-	-	-

Table 39. RC19016/013/008/004 SMBus Registers (Cont.)

Byte	Register	Name	Bit	Type	Default	Description	Definition
17	LPHCSL_AMP_CTRL	Global Amplitude Control	[7:4]	RW	0x7	0.6V~1V in 25mV steps.	Default = 0.8V
		Reserved	[3:0]	-	-	-	-
18	PD_RESTORE_LOSb_ ENABLE	AC_IN	[7]	RW	0	Enable receiver self-bias when input clock is AC coupled,	0 = DC coupled input 1 = AC coupled input
		Rx_TERM	[6]	RW	0	Enable termination resistor on CLKIN/CLKINb	0 = input termination is disabled 1 =input termination is enabled
		Reserved	[5:4]	-	-	-	-
		PD_RESTOREb	[3]	RW	1	Save Configuration in Power Down	0 = Config Cleared 1 = Config Saved
		Reserved	[2:1]	-	-	-	-
		LOSb_Readback	[0]	RO	X	real time read back of loss detect block output	0 = LOS event detected 1 = NO LOS event detected.
19	RESERVED	Reserved	[7:0]	-	-	-	-
20	OUTPUT_SLEW_ RATE_0	CLK7_SLEWRATE	[7]	RW	1	CLK7 Slew Rate Control	0 = low slew rate 1 = high slew rate
		CLK6_SLEWRATE	[6]	RW	1	CLK6 Slew Rate Control	
		CLK5_SLEWRATE	[5]	RW	1	CLK5 Slew Rate Control	
		CLK4_SLEWRATE	[4]	RW	1	CLK4 Slew Rate Control	
		CLK3_SLEWRATE	[3]	RW	1	CLK3 Slew Rate Control	
		CLK2_SLEWRATE	[2]	RW	1	CLK2 Slew Rate Control	
		CLK1_SLEWRATE	[1]	RW	1	CLK1 Slew Rate Control	
		CLK0_SLEWRATE	[0]	RW	1	CLK0 Slew Rate Control	
21	OUTPUT_SLEW_ RATE_1	CLK15_SLEWRATE	[7]	RW	1	CLK15 Slewrate Control	0 = low slew rate 1 = high slew rate
		CLK14_SLEWRATE	[6]	RW	1	CLK14 Slewrate Control	
		CLK13_SLEWRATE	[5]	RW	1	CLK13 Slewrate Control	
		CLK12_SLEWRATE	[4]	RW	1	CLK12 Slewrate Control	
		CLK11_SLEWRATE	[3]	RW	1	CLK11 Slewrate Control	
		CLK10_SLEWRATE	[2]	RW	1	CLK10 Slewrate Control	
		CLK9_SLEWRATE	[1]	RW	1	CLK9 Slewrate Control	
		CLK8_SLEWRATE	[0]	RW	1	CLK8 Slewrate Control	
22–37	Reserved	Reserved	[7:0]	-	-	-	-
38	WRITE_LOCK_ NOCLEAR	Reserved	[7:1]	RW	0	reserved	-
		WRITE_LOCK	[0]	RW	0	Non-clearable SMBus Write Lock bit. When written to one, the SMBus control registers cannot be written to. This bit can only be cleared by cycling power.	0 = SMBus not locked for writing by this bit. See WRITE_LOCK_R W1C bit. 1 = SMBus locked for writing

Table 39. RC19016/013/008/004 SMBus Registers (Cont.)

Byte	Register	Name	Bit	Type	Default	Description	Definition
39	WRITE_LOCK_ CLEAR_LOS_EVENT	Reserved	[7:2]	-	-	-	-
		LOS_EVT	[1]	R/W 1C	0	LOS Event Status When high, indicates that a LOS event was detected. Can be cleared by writing a 1 to it.	0 = No LOS event detected 1 = LOS event detected.
		WRITE_LOCK_RW1C	[0]	R/W 1C	0	Clearable SMBus Write Lock bit. When written to one, the SMBus control registers cannot be written to. This bit can be cleared by writing a 1 to it.	0 = SMBus not locked for writing by this bit. See WRITE_LOCK bit. 1 = SMBus locked for writing

5. Applications Information

5.1 Inputs, Outputs, and Output Enable Control

5.1.1 Recommendations for Unused Inputs and Outputs

5.1.1.1 Unused Differential CLKIN Inputs

The CLKIN/CLKINb inputs of the RC19xxx devices have internal bias networks that protect the devices from a floating input clock condition.

5.1.1.2 Unused Single-ended Control Inputs

The single-ended control pins have internal pull-up and/or internal pull-down resistors and do not require external resistors. They can be left floating if the default pin state is the desired state. If external resistors are needed to change the pin state or are desired for design robustness, 10kohm is the recommended value.

5.1.1.3 Unused Differential CLK Outputs

All unused CLK outputs can be left floating. Renesas recommends that no trace be attached to unused CLK outputs. While not required (but is highly recommended), the best design practice is to disable unused CLK outputs.

5.1.1.4 Unused SMBus Clock and Data Pins

If the SMBus interface is not used, the clock and data pins must be pulled high with an external resistor. The two pins can share a resistor if there is no possibility of using the SMBus interface for debug purposes. If the interface may be used for debug, separate resistors should be used. 10kohm is the recommended value.

5.1.2 Differential CLKIN Configurations

The RC19xxx clock input buffer supports four configurations:

- Direct connection to HCSL-level inputs
- Direct connection to LVDS-level inputs with *external* termination resistor
- Internal self-bias circuit for applications that *externally* AC-couple the input clock
  This feature is enabled by the **AC_IN** bit.
- Internal pull-down resistors (Rp) to terminate the clock input at the receiver.
  This feature is enabled by the **Rx_TERM** bit.

Devices with multiple input clocks have individual AC_IN and Rx_TERM configuration bits for each input. The internal input clock terminations prevent reflections and are useful for non-PCIe applications, where the frequency and transmission line length vary from the 100MHz PCIe standard.

Figure 16 through Figure 19 illustrate the above items.

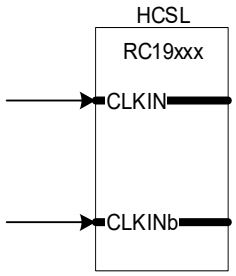

Figure 16. HCSL Input Levels (PCIe Standard)

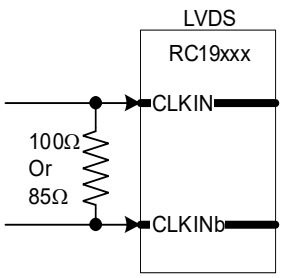

Figure 17. LVDS Input Levels

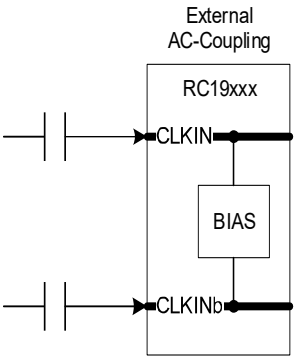

Figure 18. External AC-Coupling

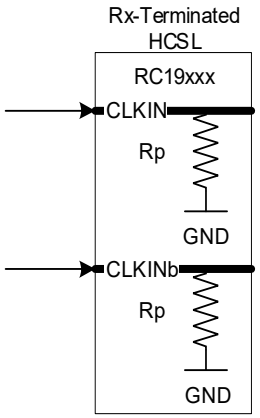

Figure 19. Receiver Termination

5.1.3 Differential CLK Output Configurations

5.1.3.1 Direct-Coupled HCSL Loads

The RC190 LP-HCSL CLK outputs have internal source terminations and directly drive industry-standard HCSL-level inputs with no external components. They support both 85ohm and 100ohm differential impedances. The CLK outputs can also drive receiver-terminated HCSL loads. The combination of source termination and receiver termination results in a double-terminated load. When double-terminated, the CLK output swing will be half of the source-terminated values.

5.1.3.2 AC-Coupled non-HCSL Loads

The RC190CLK output can directly drive AC-coupling capacitors without any termination components. The clock input side of the AC-coupling capacitor may require an input-dependent bias network (BN). For examples of terminating the RC19xxx CLK outputs to other logic families such as LVDS, LVPECL, or CML, see AN-891.

Figure 20 to Figure 22 show the various CLK output configurations.

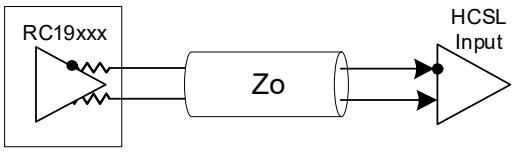

Figure 20. Direct-Coupled Source-Terminated HCSL

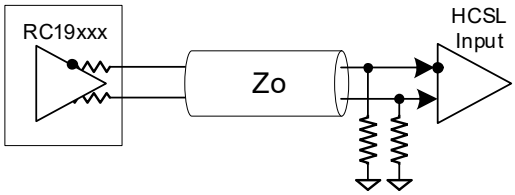

Figure 21. Direct-Coupled Double-Terminated HCSL

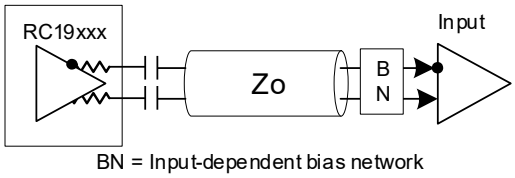

Figure 22. AC-Coupled

5.2 Power Down Tolerant Pins

Pins that are Power Down Tolerant (PDT) can be driven by voltages as high as the normal VDD of the chip, even though VDD is not present (the device is not powered). There will be no ill effects to the device and it will power up normally. This feature supports disaggregation, where the RC19xxx may be on one circuit board and devices that interface with it are on other boards. These boards may power up at different times, driving pins on the RC19xxx before it has received power. Figure 23 provides an example of a PDT call-out in a data sheet.

5.3 Flexible Startup Sequencing

RC19024A Pin Descriptions

Pin Number	Pin Name	Pin Type	Description
A1	OEb23_SBI_CLK	I, SE, PD, PDT	Active low input for enabling output 23 or the clock pin for the SBI shift register. The function is this pin is controlled by the SBEN or SBI_ENQ pin. For more information, see Side-Band Interface (SBI). OE mode: 0 = enable output, 1 = disable output. Side-Band mode: Clocks data into the SBI on the rising edge.
A2	CLK23B	O, DIF	Complementary clock output.
A3	CLK23	O, DIF	True clock output.
A4	CLKINb	I, DIF, PDT	Complementary clock input.
A5	CLKIN	I, DIF, PDT	True clock input.

Figure 23. Example: Power Down Tolerant Pin Descriptions

RC19xxx devices support Flexible Startup Sequencing (FSS). FSS allows application of CLKIN at different times in the device/system startup sequence. FSS is an additional feature that helps the system designer manage the impact of disaggregation. Table 40 shows the supported sequences; that is, the RC19xxx devices can have CLKIN running before VDD is applied, and can have VDD applied and sit for extended periods with no input clock.

Table 40. Flexible Startup Sequences

VDD	PWRGD_PWRDNb	CLKIN/CLKINb
Not present	X	Running
		Floating
		Low/Low
Present	0 or 1	Running
		Floating
		Low/Low

5.4 Loss of Signal and Automatic Clock Parking

The RC190 buffers and multiplexers have a Loss of Signal (LOS) circuit to detect the presence or absence of an input clock. The LOS circuit drives the open-drain LOSb pin (the “b” suffix indicates “bar”, or active-low) and sets the LOS_EVT bit in the SMBus register space. There are two slightly different LOSb pin behaviors at power up. Figure 24 shows the LOSb de-assertion timing for the 4, 8, 13, 16 and 24-output buffers. CLKIN is represented differentially in Figure 24 and Figure 25.

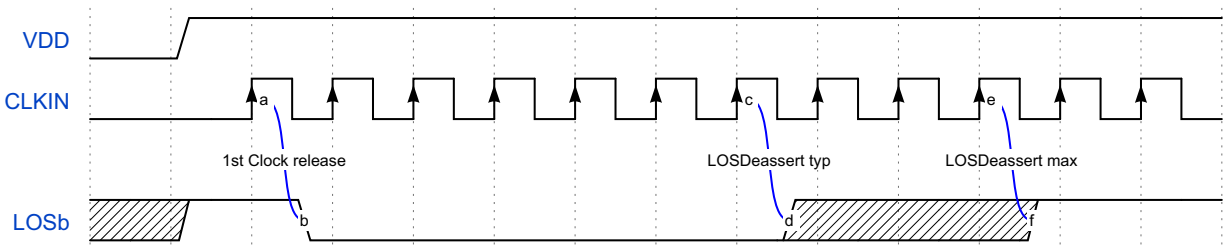

Figure 24. LOSb De-assert Timing, RC19004, RC19008, RC1901x, RC19024

Note: The LOS circuit on the 4, 8, 13, 16, and 24 output buffers requires a CLKIN edge to release the LOSb pin after power up. So, the LOSb pin will be high until the first clock edge after power up.

Figure 25 shows the LOSb de-assertion timing for the 2-output and 20-output buffers that default to low at power up.

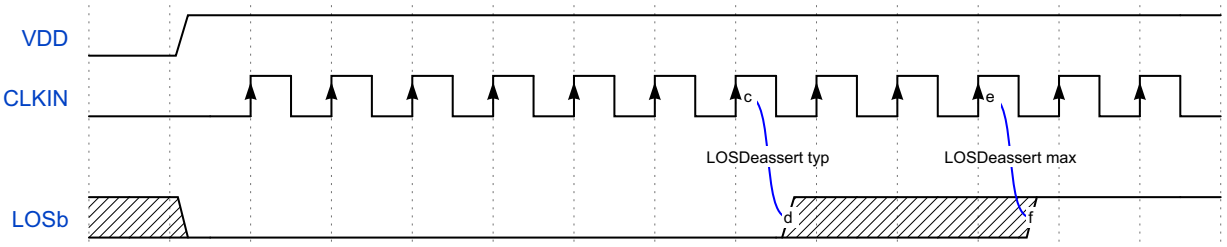

Figure 25. LOSb De-assert Timing RC19002, RC19020 Devices

The following diagram shows the LOSb assertion sequence when the CLKIN is lost. It also shows the Automatic Clock Parking (ACP) circuit bring the outputs to a Low/Low state after an LOS event. For exact timing, see Electrical Specifications.

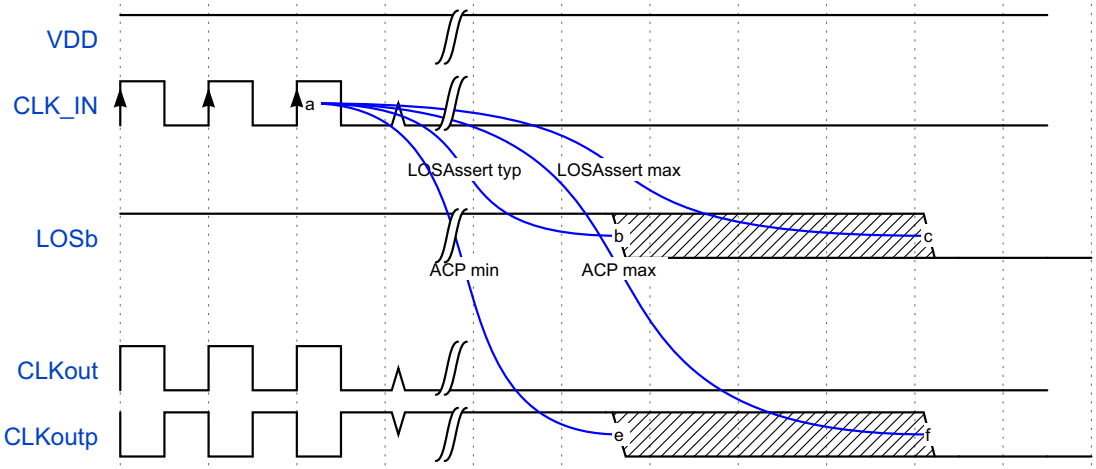

Figure 26. LOSb Assert Timing

5.5 Output Enable Control

The RC190 buffer/mux family provides three mechanisms to enable or disable clock outputs. All three mechanisms start and stop the output clocks in a synchronous, glitch-free manner. A clock output is enabled only when all three mechanisms indicate “enabled.” The following sections describe the three mechanisms.

5.5.1 SMBus Output Enable Bits

This section does not apply to the RC19002 because it does not have an SMBus.

The RC19xxx Clock buffer/multiplexer family has a traditional SMBus output enable bit for each output. The power-up default is 1, or enabled. Changing this bit to a 0 disables the output to a low/low state. The transitions between the enable and disable states are glitch-free in both directions.

Note: The glitch-free synchronization logic requires the CLKIN be running to enable or disable the outputs with this mechanism.

5.5.2 Output Enable (OEb) Pins

The OEb (Note: the “b” suffix indicates “bar”, or active-low) pins on the RC19xxx family provide flexible CLKREQb functionality for PCIe slots and/or banked OE control for ‘motherboard-down’ devices (depending on the device). If the OEb pin is low the controlled output is enabled. If the OEb pin is high, the controlled output is disabled to a low/low state. All OEb pins enable and disable the controlled outputs in a glitch-free, synchronous manner.

Note: The glitch-free synchronization logic requires the CLKIN be running to enable or disable the outputs with this mechanism.

5.5.3 RC19024/020 Clock Buffer OEb Pins

The 24-output RC19024 has three dedicated OEb pins (OE2b, OE22b, and OE23b) that control CLK [2,22,23], respectively. It also has four bank OEb pins, OEb[A:D], that are mappable. Each pin can control up to six clock outputs, and defaults to controlling one output. The RC19024 output enable mapping is described in Table 41.

Table 41. RC19024 OEb Mapping

Pin Name	SBI_ENQ Pin	Default Pin Function	Optional Pin Function [1]
OEb_A	X	CLK5 OEb	CLK[4:0] OEb
OEb_B	X	CLK6 OEb	CLK[11:7] OEb
OEb_C	X	CLK17 OEb	CLK[18:12] OEb
OEb_D	X	CLK18 OEb	CLK[23-19]
OEb2_SHFT_LDb	0 (Disabled)	CLK2 OEb	N/A
	1 (Enabled)	SHFT_LDb	N/A
OEb22_SBI_IN	0 (Disabled)	CLK22 OEb	N/A
	1 (Enabled)	SBI_IN	N/A
OEb23_SBI_CLK	0 (Disabled)	CLK23 OEb	N/A
	1 (Enabled)	SBI_CLK	N/A

1. See the OEb_ASSIGNMENT registers in Table 36.

The RC19020 and the RC19020A072 each have 8 OEb pins. Some of the pins are muxed with SBI functions.

The RC19020A072 OEb pins can be configured to control up to two outputs. For more information, see Table 42 and Table 43.

Table 42. RC19020 OEb Mapping

Pin Name	SBI_ENQ Pin	Pin Function
OEb12	X	CLK12 OEb
OEb11	X	CLK11 OEb
OEb10_SHFT_LDb	0 (Disabled)	CLK10 OEb
	1 (Enabled)	SHFT_LDb
OEb9	X	CLK9 OEb

Table 42. RC19020 OEb Mapping (Cont.)

Pin Name	SBI_ENQ Pin	Pin Function
OEb8	X	CLK8 OEb
OEb7	X	CLK7 OEb
OEb6_SBI_CLK	0 (Disabled)	CLK6 OEb
	1 (Enabled)	SBI_CLK
OEb5_SBI_IN	0 (Disabled)	CLK5 OEb
	1 (Enabled)	SBI_IN

Table 43. RC19020A072 OEb Mapping[1]

Pin Name	SBI_ENQ Pin	Default Pin Function	Optional Pin Function
OEb12	X	CLK12 OEb	CLK13 OEb
OEb11	X	CLK11 OEb	CLK14 OEb
OEb10_SHFT_LDb	0 (Disabled)	CLK10 OEb	CLK15 OEb
	1 (Enabled)	SHFT_LDb	N/A
OEb9	X	CLK9 OEb	CLK0 OEb
OEb8	X	CLK8 OEb	CLK1 OEb
OEb7	X	CLK7 OEb	CLK2 OEb
OEb6_SBI_CLK	0 (Disabled)	CLK6 OEb	CLK3 OEb
	1 (Enabled)	SBI_CLK	N/A
OEb5_SBI_IN	0 (Disabled)	CLK5 OEb	CLK4 OEb
	1 (Enabled)	SBI_IN	N/A

1. See the OEb_ASSIGNMENT registers in Table 38.

The smaller RC19016, RC19013, and RC19004 devices (16, 13, and 4 outputs respectively) provide a dedicated OEb pin for each output, and therefore do not have OEb_ASSIGNMENT registers. Note that four OEb pins are used for the SBI interface when SBI_ENQ = 1 (for more information, see Table 44).

The RC19002 has single function dedicated OEb pins. For more information, see Figure 9.

Table 44. RC19016, RC19013, RC19008, RC19004 Buffer OEb Mapping

Pin Name	SBI_ENQ Pin	RC19016 Pin Function	RC19013 Pin Function	RC19008 Pin Function	RC19004 Pin Function
OEb0	X	CLK0 OEb	CLK0 OEb	-	-
OEb1	X	CLK1 OEb	CLK1 OEb	CLK1 OEb	-
OEb2_SBI_OUT	0 (Disabled)	CLK2 OEb	CLK2 OEb	CLK2 OEb	CLK2 OEb
	1 (Enabled)	SBI_OUT	SBI_OUT	SBI_OUT	SBI_OUT
OEb3	X	CLK3 OEb	CLK3 OEb	CLK3 OEb	-
OEb4	X	CLK4 OEb	-	-	-
OEb5_SBI_CLK	0 (Disabled)	CLK5 OEb	-	CLK5 OEb	CLK5 OEb
	1 (Enabled)	SBI_CLK	-	SBI_CLK	SBI_CLK
OEb6	X	CLK6 OEb	-	CLK6 OEb	-
OEb6_SBI_CLK	0 (Disabled)	-	CLK6 OEb	-	-
	1 (Enabled)	-	SBI_CLK	-	-

Table 44. RC19016, RC19013, RC19008, RC19004 Buffer OEb Mapping (Cont.)

Pin Name	SBI_ENQ Pin	RC19016 Pin Function	RC19013 Pin Function	RC19008 Pin Function	RC19004 Pin Function
OEb7	X	CLK7 OEb	CLK7 OEb	CLK7 OEb	-
OEb8	X	CLK8 OEb	CLK8 OEb	-	-
OEb9_SBI_IN	0 (Disabled)	CLK9 OEb	CLK9 OEb	-	CLK9 OEb
	1 (Enabled)	SBI_IN	SBI_IN	-	SBI_IN
OEb10	X	CLK10 OEb	CLK10 OEb	-	-
OEb10_SBI_IN	0 (Disabled)	-	-	CLK10 OEb	-
	1 (Enabled)	-	-	SBI_IN	-
OEb11	X	CLK11 OEb	CLK11 OEb	-	-
OEb12	X	CLK12 OEb	CLK12 OEb	-	-
OEb13_SHFT_LDb	0 (Disabled)	CLK13 OEb	CLK13 OEb	CLK13 OEb	CLK13 OEb
	1 (Enabled)	SHFT_LDb	SHFT_LDb	SHFT_LDb	SHFT_LDb
OEb14	X	CLK14 OEb	CLK14 OEb	-	-
OEb15	X	CLK15 OEb	-	-	-

5.5.4 Side-Band Interface (SBI)

This section does not apply to the RC19002 because it does not have a side-band interface.

SMBus output enable bits and OEb pins are the traditional methods for enabling and disabling clocks. The 2-wire SMBus interface can enable or disable all clock outputs in a device. This pin efficiency is its advantage. The SMBus interface's main drawback is that it is a relatively slow physical interface, whose software is one of several routines running on an often overtaxed micro-controller. OEb pins are real-time and are ideally dedicated to an individual clock output. As buffers grow in output count, dedicated OEb pins become problematic for two reasons. First, the clock buffer pin count becomes much larger than it otherwise would be, resulting in a larger package. Second, unless the OEb pins are used for CLKREQ# functionality, the number of pins that need to be controlled outgrows the GPIO pins of an FPGA or micro-controller.

A third output enable/disable mechanism, the Side-Band Interface (SBI), addresses these issues. The SBI is a simple 3-wire (4-wire if the SBI_OUT pin is used) interface that can control all outputs across multiple devices. The SBI is only slightly less pin efficient than the SMBus, and is much more pin efficient than a dedicated OEb pins per output. It is protocol-free, hardware-oriented and runs at speeds up to 25MHz, much faster than SMBus.

Another SBI advantage is that it is active after power is applied and before PWRGD is asserted. External logic can disable specific outputs before PWRGD is asserted, and can then dynamically adjust the output run state during device operation. The SBI can make the adjustments much more rapidly than SMBus.

The RC19xxxA 4-wire SBI interface consists of the SBI_IN, SBI_CLK, SHFT_LDb, and SBI_OUT pins. The RC19xxxA SBI is enabled by strapping the SBI_ENQ pin to 1. When enabled, various OEb pins become the SBI interface. The exact pins that are multiplexed vary with device (for more information, see Table 44).

The SBI_ENQ pin strap takes effect as soon as power is applied and is not dependent on the assertion of PWRGD_PWRDNb to 1. Because of this, the SBI_ENQ must be static and cannot change once power is applied. If SBI_ENQ is 0 when power is applied, the SBI is disabled and has no impact on enabling or disabling outputs.

The SBI consists of a shift register, an SMBus readback register (of the shift register contents), and an SMBus MASK register. The SBI shifts a bit stream containing the enable/disable pattern into the shift register. A 1 enables an output and a 0 disables an output. All shift-register bits default to 1 at power up, indicating an enabled state. This means that the SBI can be used to disable outputs at power up because the default is enabled.

The SBI has its own SBI_CLK and does not need a running CLKIN to shift in an enable/disable pattern. This provides utmost flexibility for setting output run state before the SMBus becomes active or before the CLKIN is

applied. When the SBI indicates enabled, the standard SMBus output enable bits and OEb pins can control the outputs.

The SBI feeds common output enable/disable synchronization logic ensuring glitch-free enable and disable of outputs. Note: The glitch-free synchronization logic requires the CLKIN be running to enable or disable the outputs with this mechanism.

If the application does not use the SBI, the SBI_ENQ pin can be tied to 0, and the entire SBI has no impact on enabling or disabling clock outputs.

The SBI Mask registers allow the user to block the disable function of the SBI via the SMBus. The SBI Mask registers default to 0 at power-up, allowing the SBI shift register bits to disable their respective output. After asserting the PWRGD_PWRDNb pin high, the SMBus is active and the SBI mask registers can be configured via SMBus to mask off (block) the SBI disable function. In other words, setting and SBI Mask bit to 1 forces the SBI to always indicate “enable” for the respective output. This allows the user to prevent the SBI from accidentally turning off a critical output.

The RC190xx clock buffers provide the ability to read back the SBI shift register contents via the SMBus. The SMBus readback values update on each falling edge of SHFT_LDb. Note: The SBI shift register can only be read using the SMBus; the SMBus *cannot* be used to load it.

Figure 27 shows the high-level functional description of SBI.

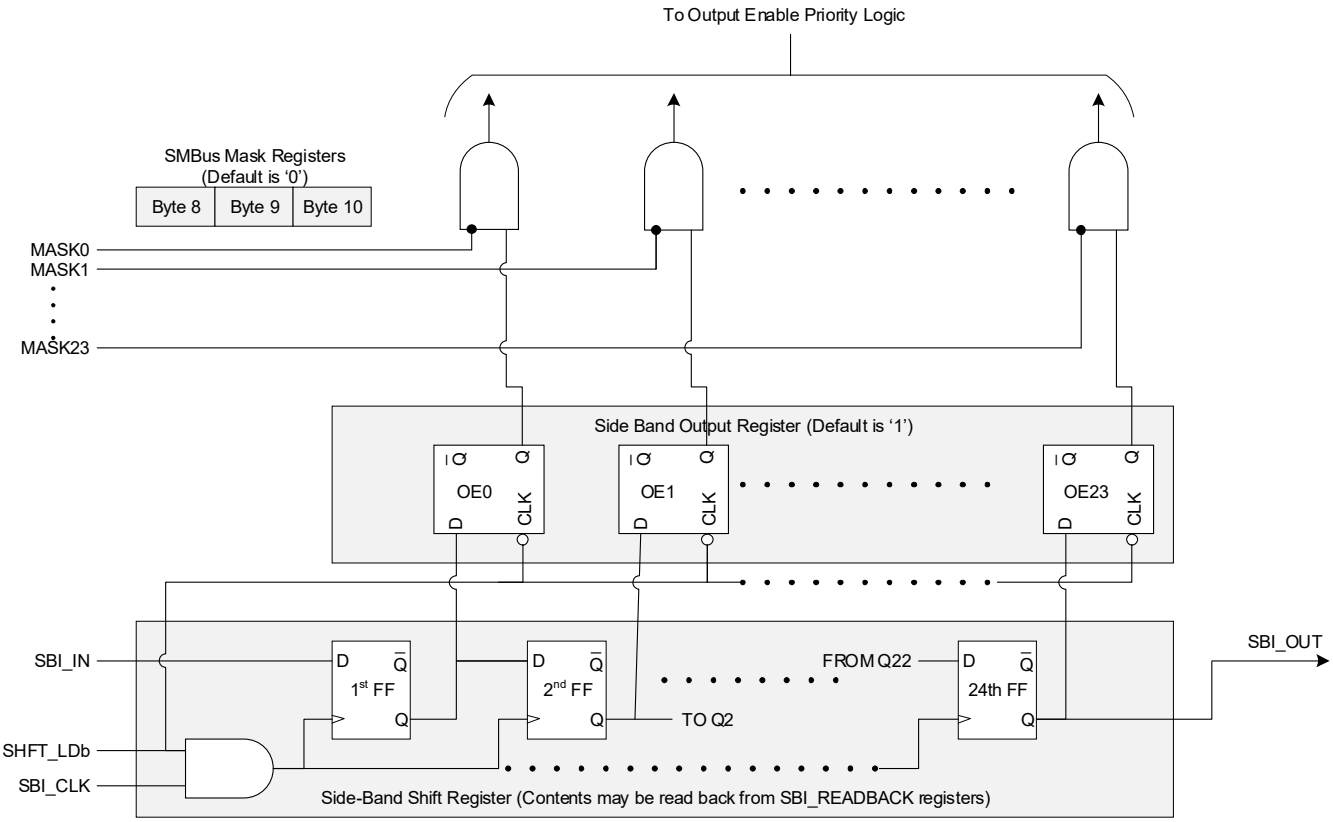

Figure 27. Side-band Interface High-Level Functional Diagram (RC19024 shown)

5.5.4.1 Using the SBI

Using the RC19024 as an example, we see the SBI shift order follows the order of the SMBus enable bits. in Byte [2:0] as shown in Figure 28. The first bit shifted in would be the output enable/disable bit for the CLK23, which is in Byte 2 bit 7. The last bit shifted in would be the output enable/disable for CLK0, which is in Byte 0, bit 0.

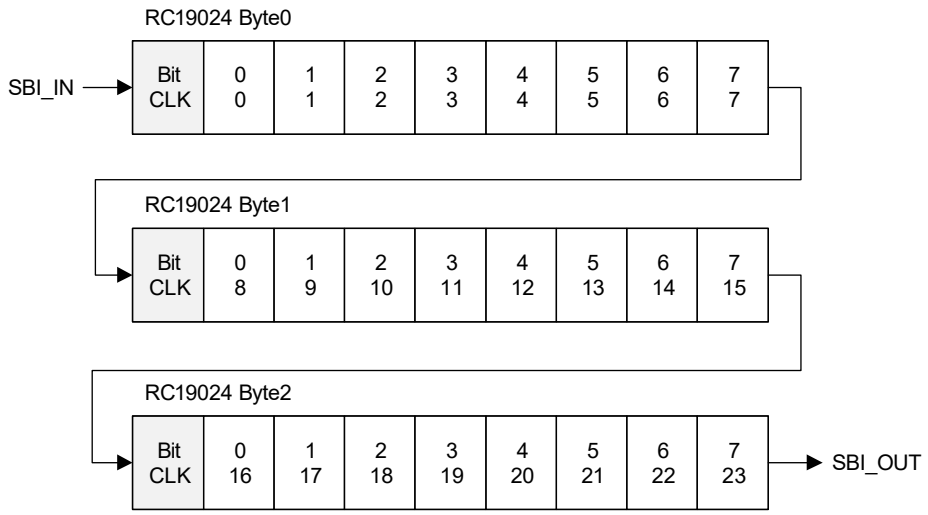

Figure 28. RC19024 Side-Band Shift Order

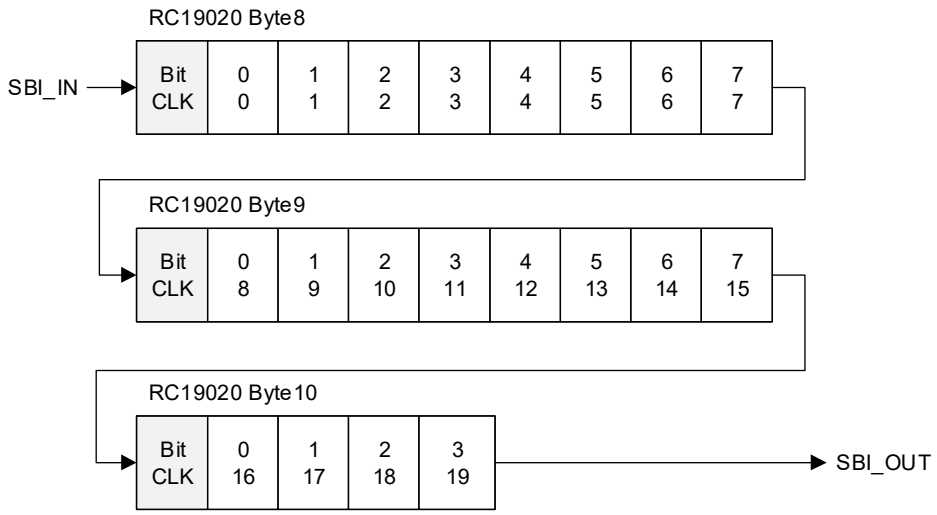

Figure 29. RC19020 Side-Band Shift Order

Figure 30 through Figure 33 show the Side-Band Shift Order for the RC19016, RC19013, RC19008, and RC19004 buffers. Notice that the Side-Band Shift Count is equal to the number of outputs in each device.

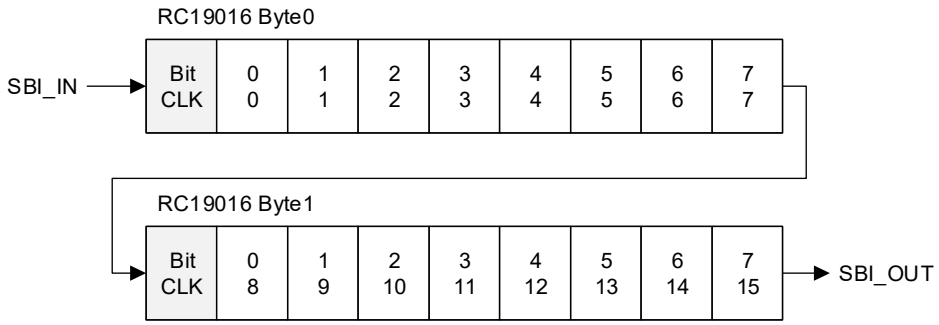

Figure 30. RC19016 Side-Band Shift Order

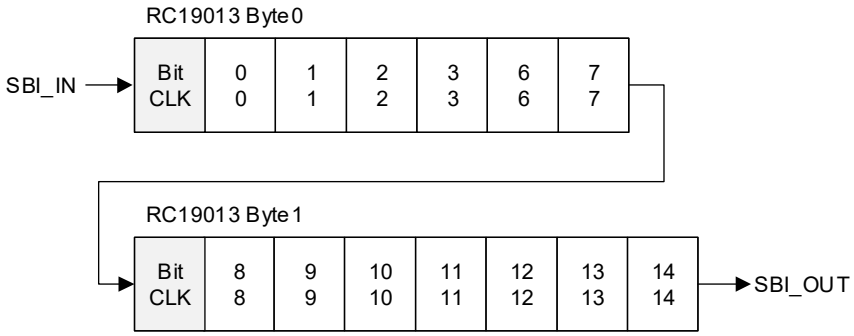

Figure 31. RC19013 Side-Band Shift Order

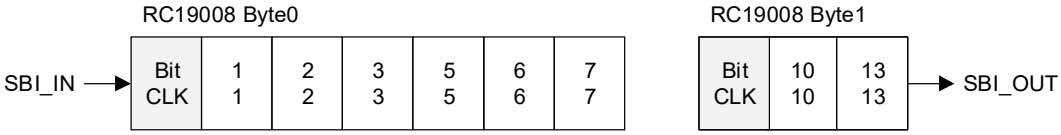

Figure 32. RC19008 Side-Band Shift Order

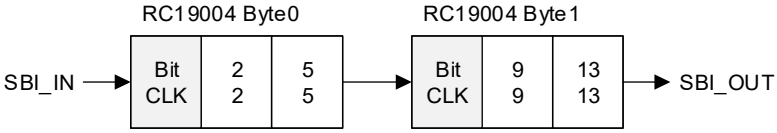

Figure 33. RC19004 Side-Band Shift Order

5.5.4.2 Side-Band Interface Timing

Figure 34 shows the basic timing of the side-band interface. The SHFT_LDb pin goes high to enable the SBI_CLK input. Next, the rising edge of SBI_CLK clocks SBI_IN data into the shift register. After the 24th clock (assuming the RC19024), stop the SBI_CLK low and drive the SHFT_LDB pin low. The falling edge of SHFT_LDb latches the shift register contents to the output control register, disabling or enabling the outputs. Always shift the complete set of bits into the shift register to control the outputs. For the Side-Band Interface AC/DC Electrical Characteristics, see Table 32.

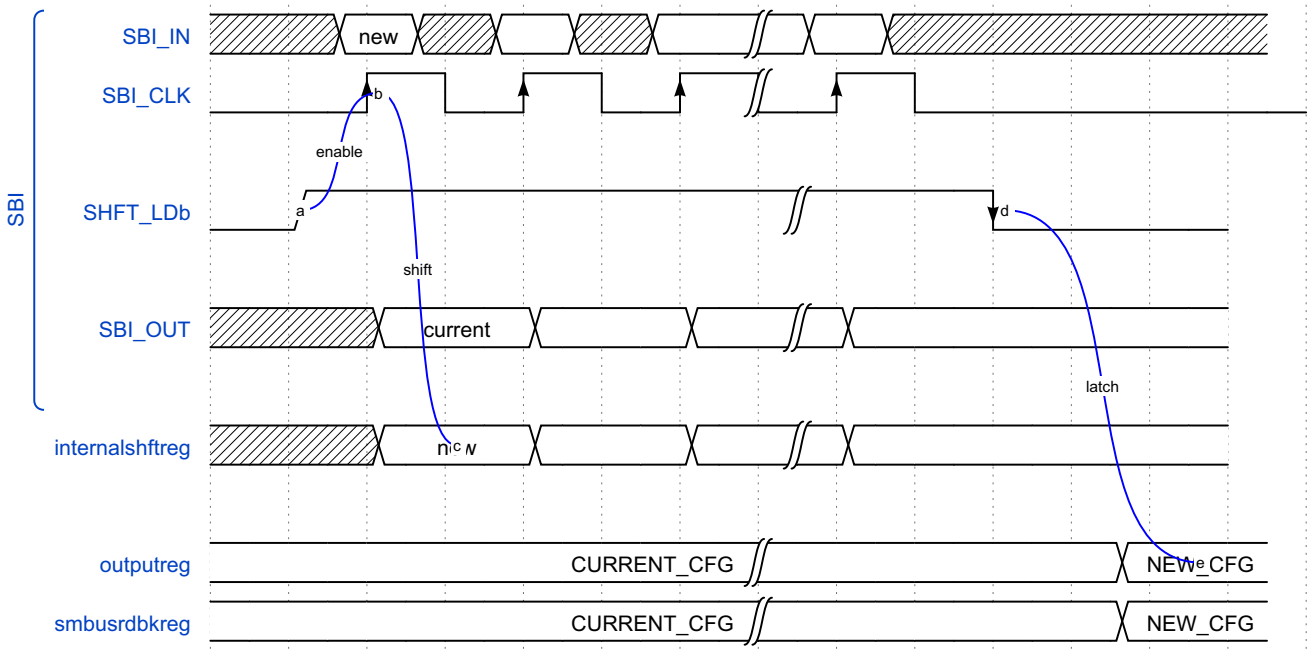

Figure 34. Side-Band Interface Functional Timing

5.5.4.3 Side-Band Interface Connection Topologies

The RC190xxA buffer/mux devices support two SBI connection topologies: star and daisy chain. In a star topology, multiple devices can share the SBI_CLK and SBI_IN pins. In this topology, each RC190xx has a dedicated SHFT_LDb pin. In a daisy-chain topology, the SBI_OUT of one device connects to the SBI_IN of a downstream device. When using the daisy-chain topology, the user must shift a complete set of bits for the combined devices. Two daisy-chained RC19024 devices require shifting of 2 × 24 = 48 bits. An RC19016 followed by an RC19008 would require shifting 8 + 16 = 24 bits. When the SHFT_LDb pin is low, the SBI interface ignores any activity on the SBI_CLK and SBI_IN pins.

Figure 35 shows a star topology connection for the RC190xxA SBI interface. The star topology allows independent configuration of each device. For the RC19024, this means shifting 24 bits at a time. A disadvantage is that a separate SHFT_LDb pin is required for each device. The star topology allows additional devices to be controlled at the cost of an additional GPIO per device.

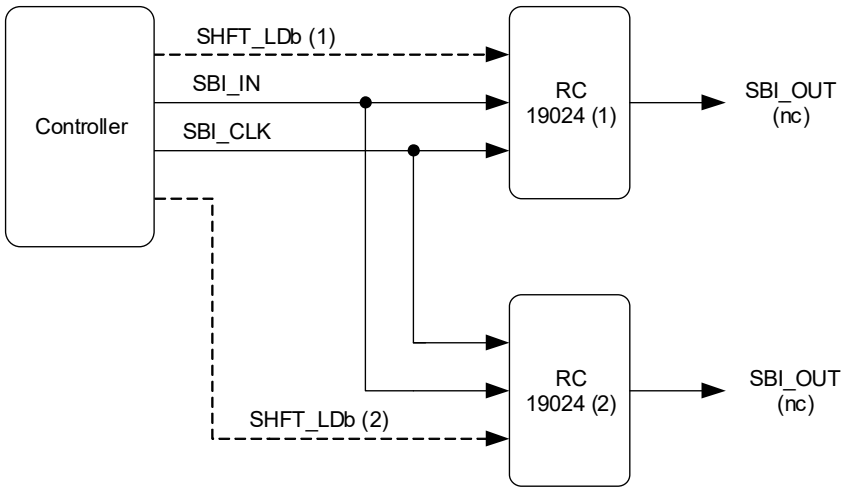

Figure 35. Side-Band Interface Star Topology

The daisy-chain topology allows configuration of any number of devices with only three signals from the SBI controller. It uses the SBI_OUT pin of one device to drive the SBI_IN pin of the next device in the daisy chain.

Users must take care to shift the proper number of bits in this configuration. For the example shown in Figure 36, the SBI bit stream consists of 48 bits.

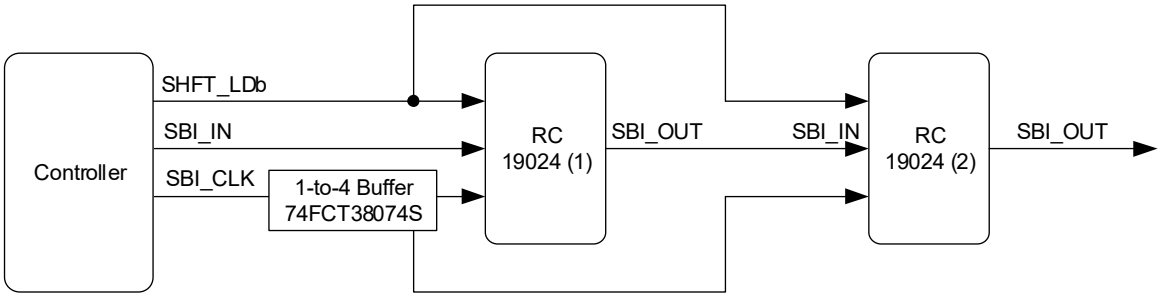

Figure 36. Side-Band Interface Daisy-Chain Topology

5.5.5 Output Enable/Disable Priority

The RC190 output enable/disable priority is an “AND” function of all enable methods. This means that the SMBus output enable bit AND the OEb pin (if present/assigned) AND the SBI must indicate that the output is enabled in order for the output to be enabled. A logical representation of the priority logic is shown in Figure 37.

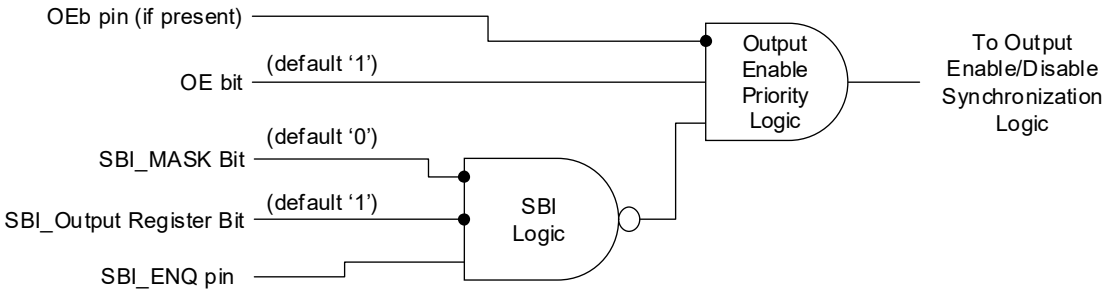

Figure 37. Output Enable/Disable Priority (Logical)

5.6 PCB Layout Recommendations

Proper layout is critical to achieving the full functionality and efficiency of the device. For information on how to support optimal electrical performance, effective thermal management, and overall system reliability, see the PCIe Buffer-Mux Layout Recommendations Application Note.

6. Package Outline Drawings

The package outline drawings are located at the end of this document and are accessible from the Renesas website (see the package links in Ordering Information). The package information is the most current data available and is subject to change without revision of this document.

7. Marking Diagrams

7.1 RC1901xA/RC1900xA Marking Diagrams

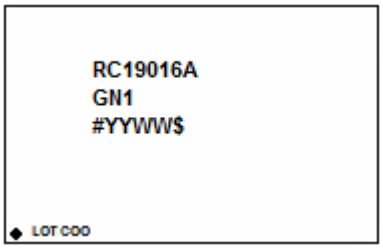

RC19016A 64-VFQFPN 85Ω

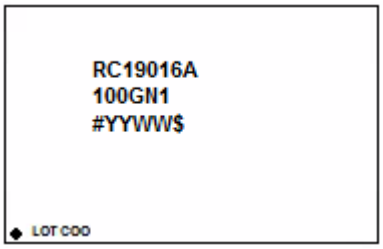

RC19016A 64-VFQFPN 100Ω

- Lines 1 and 2: part number.
- Line 3:
  - “#” indicates stepping number.
  - “YYWW” indicates the last two digits of the year and work week the part was assembled.
  - “$” indicates the mark code.

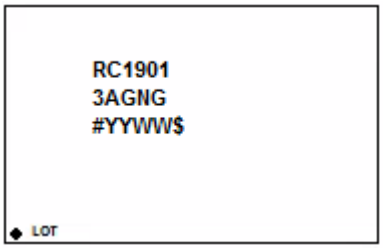

RC19013A 56-VFQFPN 85Ω

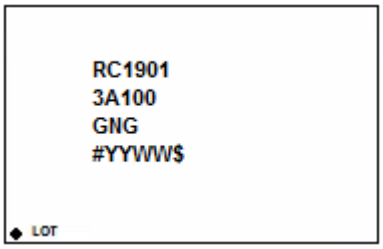

RC19013A 56-VFQFPN 100Ω

- Lines 1 and 2 (for 85Ω); 1, 2, and 3 (for 100Ω): part number.
- Line 3 (for 85Ω) or 4 (for 100Ω):
  - “#” indicates stepping number.
  - “YYWW” indicates the last two digits of the year and work week the part was assembled.
- “$” indicates the mark code.

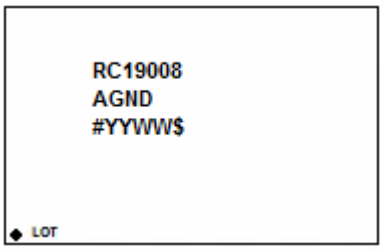

RC19008A 40-VFQFPN 85Ω

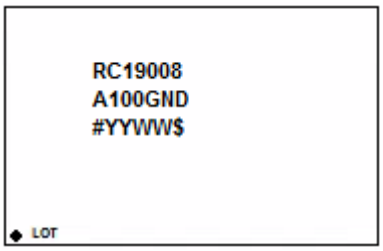

RC19008A 40-VFQFPN 100Ω

- Lines 1 and 2: part number.
- Line 3:
  - “#” indicates stepping number.
  - “YYWW” indicates the last two digits of the year and work week the part was assembled.
- “$” indicates the mark code.

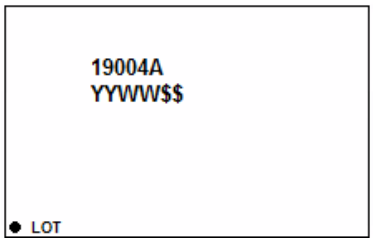

RC19004A 28-VFQFPN 85Ω

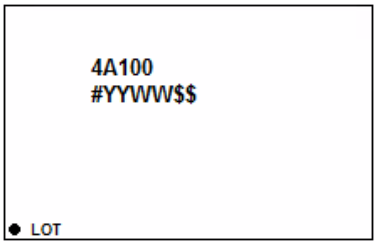

RC19004A 28-VFQFPN 100Ω

- Line 1: truncated part number.
- Line 2:
  - “YYWW” indicates the last two digits of the year and work week the part was assembled.
- “$$” indicates the mark code.

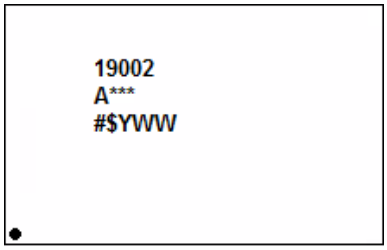

RC19002A 20-VFQFPN

- Line 1 is the part number
- Line 2 “A” is part of the part number and “***” is the sequential code
- Line 3:
  - “#” indicates the stepping number.
  - “$” denotes the mark location code.
  - “YWW” denotes the assembly date: “Y” is the last digit of the year and “WW” are the last two digits of work week.

7.2 RC1902xA Marking Diagrams

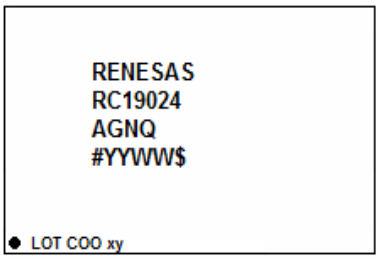

RC19024A 100-VFQFPN 85Ω

- Lines 2 and 3: part number
- Line 4:
  - “#” denotes the stepping number.
  - “YYWW” denotes the last two digits of the year and the work week the part was assembled.
  - “$” denotes the mark code.
- “LOT” denotes the lot number
  - “COO” denotes country of origin.

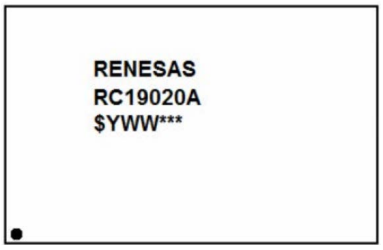

RC19020A 80-VFQFPN 85Ω

- Lines 2: part number
- Line 3:
  - $” denotes the mark code.
  - “#” denotes the stepping number.
  - “YWW” denotes the last digit of the year and the work week the part was assembled.

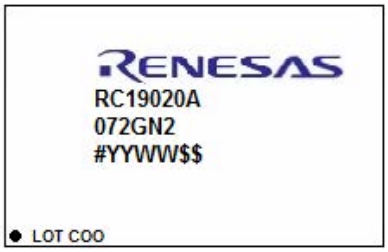

RC19020A072 72-VFQFPN 85Ω

- Lines 2 and 3: part number
- Line 4:
  - “#” denotes the stepping number.
  - “YYWW” denotes the last two digits of the year and the work week the part was assembled.
  - “$$” denotes the mark code.
- “LOT” denotes the lot number
  - “COO” denotes country of origin.

8. Ordering Information

Table 45. Ordering Information

Part Number	Carrier Type	Number of Outputs	Differential Output Impedance (Ω)	Package	Temperature Range
RC19024AGNQ#BB0	Tray	24	85	8 × 8 mm, 0.5mm pitch, 100-VFQFPN	-40 to +105°C
RC19024AGNQ#KB0	Tape and Reel (EIA-481-D)				
RC19020AGN6#BD0	Tray	20	85	6 × 6 mm, 0.5mm pitch, 80-VFQFPN	-40 to +105°C
RC19020AGN6#KD0	Tape and Reel (EIA-481-D)				
RC19020A072GN2#BB0	Bulk	20	85	10 x 10 mm, 0.50mm pitch 72-VFQFPN	-40 to +105°C
RC19020A072GN2#KB0	Tape and Reel (EIA-481-D)				
RC19016AGN1#BB0	Tray	16	85	9 × 9 mm, 0.5mm pitch, 64-VFQFPN	-40 to +105°C
RC19016AGN1#KB0	Tape and Reel (EIA-481-D)				
RC19016A100GN1#BB0	Tray		100		
RC19016A100GN1#KB0	Tape and Reel (EIA-481-D)				
RC19013AGNG#BB0	Tray	13	85	7 × 7 mm, 0.4mm pitch, 56-VFQFPN	-40 to +105°C
RC19013AGNG#KB0	Tape and Reel (EIA-481-D)				
RC19013A100GNG#BB0	Tray		100		
RC19013A100GNG#KB0	Tape and Reel (EIA-481-D)				
RC19008AGND#BB0	Tray	8	85	5 × 5 mm, 0.4mm pitch, 40-VFQFPN	-40 to +105°C
RC19008AGND#KB0	Tape and Reel (EIA-481-D)				
RC19008A100GND#BB0	Tray		100		
RC19008A100GND#KB0	Tape and Reel (EIA-481-D)				
RC19004AGNL#BB0	Tray	4	85	4 × 4 mm, 0.4mm pitch, 28-VFQFPN	-40 to +105°C
RC19004AGNL#KB0	Tape and Reel (EIA-481-D)				
RC19004A100GNL#BB0	Tray		100		
RC19004A100GNL#KB0	Tape and Reel (EIA-481-D)				
RC19002AGNT#BD0	Tray	2	Selectable	3 × 3 mm, 0.4mm pitch 20-VFQFPN	-40 to +105°C
RC19002AGNT#KD0	Tape and Reel (EIA-481-D)				

9. Revision History

Revision	Date	Description
1.30	Aug 21, 2026	▪ Updated footnote 2 in Table 31 ▪ Updated the Marking Diagrams for RC19004A, RC19002A, and RC19020A
1.29	May 11, 2026	▪ Added a caution statement to Absolute Maximum Ratings
1.28	Nov 5, 2025	▪ Deleted non-applicable parameter description information from Table 12 and Table 13 ▪ Changed references to *PCIe Base Specification, Revision 6.0* to *PCIe Base Specification, Revision 7.0* ▪ Replaced SMBus “master/target” terminology with “host/target”
1.27	Aug 8, 2025	Corrected a typo under Figure 25: changed “bring the inputs...” to “bring the outputs...”
1.26	Jun 27, 2025	Added PCB Layout Recommendations
1.25	Jun 16, 2025	Updated footnote 3 in Table 13
1.24	May 12, 2025	Updated Figure 32
1.23	Mar 28, 2025	Changed the Pin Type for pin M6 in Table 2
1.22	Jan 14, 2025	Updated Output Impedance parameter for CLK outputs in Table 27
1.21	Nov 5, 2024	▪ Added PCIe Gen7 specifications to Table 12 and Table 13 ▪ Updated front page text.
1.20	Oct 2, 2024	▪ Updated the Type and Description for pin 55 in Table 4 ▪ Updated the Type and Description for pin 46 in Table 5 ▪ Updated the Type and Description for pin 34 in Table 6 ▪ Updated the Type and Description for pin 11, 14, 21, and 22 in Table 7
1.19	Jul 30, 2024	▪ Updated references to the 6 x 6 package to 80-VFQFPN. No technical changes were made
1.18	Nov 1, 2023	▪ Changed the description of “O” to Output in Signal Types
1.17	Oct 25, 2023	▪ Updated RC19002 pin descriptions for pins 6 and 7 in Table 8
1.16	Sep 12, 2023	▪ Updated the RC19020AGN6 marking diagram (see RC1902xA Marking Diagrams)
1.15	Jul 25, 2023	▪ Updated descriptive text for Figure 25 in section 5.4 ▪ Updated part number to RC190xxA from RC19xxxA in section 5.5.4.3 ▪ Updated Figure 36
1.14	Jun 29, 2023	▪ Updated RC19002 Pin Information for pins 3, 6, 7, and 8 ▪ Updated various device specifications: • V_{MAX}, V_{MIN}, V_{LOW}, and $\Delta T_{R/F}$ in Table 20 • V_{OL} and t_{DC} in Table 21 • V_{OH}, V_{OL}, V_{CROSS}, and ΔV_{CROSS}, t_F in Table 22 • V_{OH}, V_{CROSS}, t_R, and t_{DC} in Table 23 • V_{OL}, V_{CROSS}, ΔV_{CROSS}, ΔV_{CROSS}, and t_R in Table 24 • V_{OH}, V_{OL}, V_{CROSS}, ΔV_{CROSS}, t_R, t_F in Table 25 • Added V_{DDCLK} Operating Current 100Ω impedance values for RC19002 in Table 28 ▪ Completed other minor changes
1.13	Jun 2, 2023	▪ Added missing slew rate control bytes 20 and 21 to Table 39 ▪ Renamed various tables to list the parts they apply to instead of using “x” wildcard. ▪ Removed “A” suffix from generic part number references throughout the document; left A100 and A072 suffixes.
1.12	May 10, 2023	▪ Updated the Type information for OEb pins in Pin descriptions tables ▪ Updated the Applications Information ▪ Completed other minor changes
1.11	Mar 10, 2023	▪ Added RC19002A to data sheet, moved back to Preliminary pending production release of the RC19002A.
1.10	Dec 1, 2022	▪ Fixed the link for the 40-VFQFPN package in Table 45
1.09	Nov 17, 2022	▪ Changed t_{SLEW} to 6 from 4 in Table 32
1.08	Nov 15, 2022	▪ Updated the description of RC19024 pin A7 in Table 1

Revision	Date	Description
1.07	Apr 11, 2022	▪ For all devices *except* RC19020A072: • Updated Pin Type of all pins beginning with OEb to properly indicate internal pull-down (PD) resistors. ▪ For all devices *except* RC19020A072 and RC19024A: • Removed Power-Down Tolerant indicator from multiplexed OEb SBI_OUT pins, they are not PDT. ▪ Minor reformatting of Pin Descriptions to reduce required space in Pin Description tables and to provide consistency across devices.
1.06	Apr 4, 2022	▪ Updated Loss of Signal and Automatic Clock Parking to change all CLK_IN to CLKIN for consistency. ▪ Inserted LOSb De-assert Timing RC19002, RC19020 Devices figure to distinguish the LOSb start-up behavior of those devices from the other devices.
1.05	Mar 23, 2022	Updated pins B10 and B43 from Do Not Connect (DNC) to GND on RC19024 Pin Assignments to tie off floating pins used for test.
1.04	Mar 15, 2022	Updated the *PCI Express Base Specification 6.0* revision reference to 1.0 in footnotes 1 and 7 in Table 12 and Table 13.
1.03	Mar 3, 2022	▪ Corrected pin 10 of RC19008A from NC to VDDCLK (see RC19008 Pin Assignments).
1.02	Feb 24, 2022	▪ Completed minor updates to titles of CLK AC/DC Characteristics Tables for clarity. ▪ Completed other minor changes
1.01	Feb 1, 2022	▪ Added RC19020A072 pin out and pin descriptions to data sheet. ▪ Updated Figure 10 for RC19020A and RC19020A072. ▪ Updated Figure 2 title to reference correct package type (VFQFPN) and updated “100-VFQFPN” references to “100-VFQFPN” throughout the document. ▪ Added RC19020A072 marking diagram to RC1902xA Marking Diagrams and updated marking descriptions of RC19020A and RC19020A072.
1.00	Jan 18, 2022	Initial release.

100-VFQFPN, Package Outline Drawing

8.0 x 8.0 x 0.55 mm Body, Dual Row

NQQ100P1, PSC-4793-01, Rev 00, Page 1

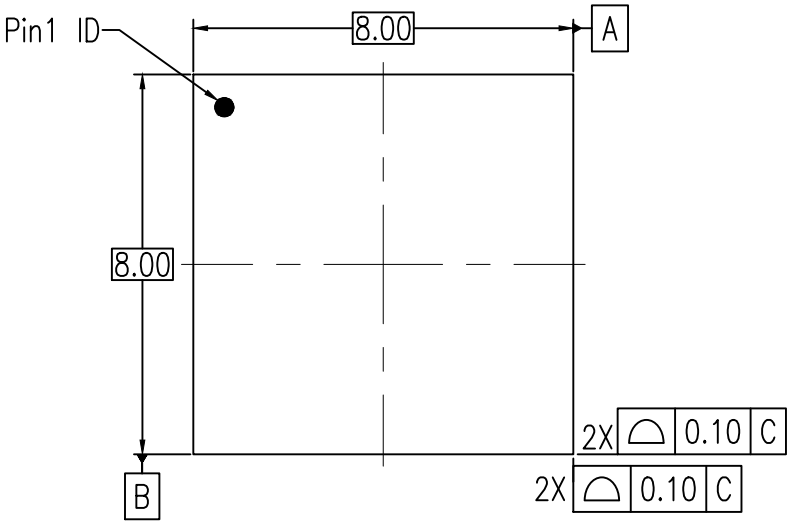

TOP VIEW

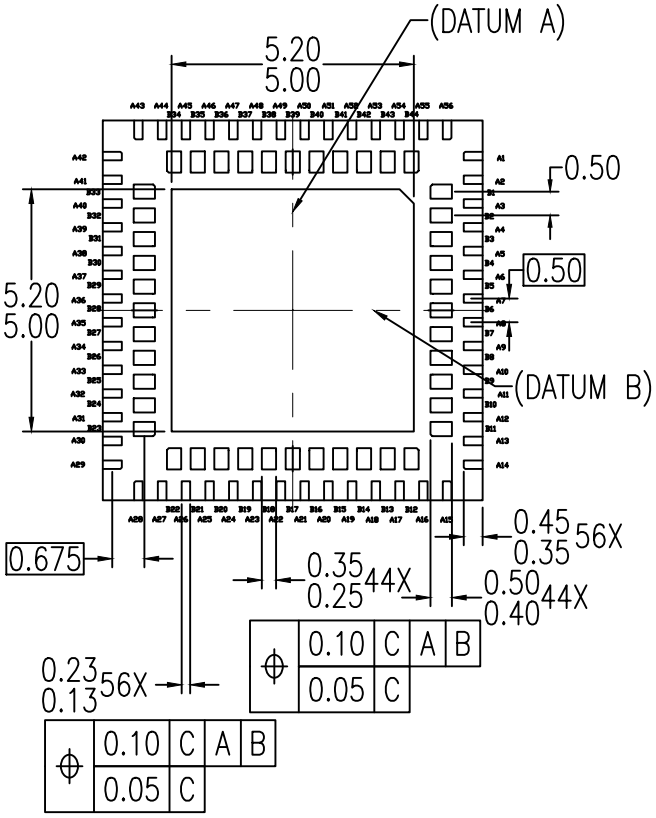

BOTTOM VIEW

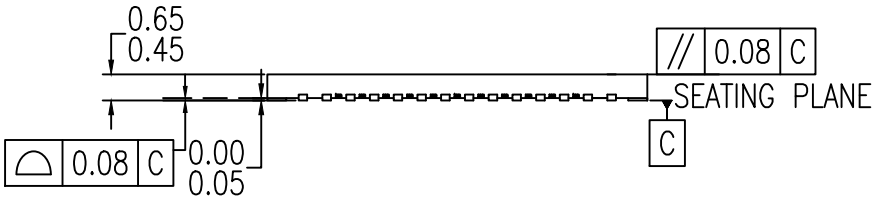

SIDE VIEW

NOTES:

1. ALL DIMENSIONS AND TOLERANCES ARE PER ASME Y14.5M-1994.
2. ALL DIMENSIONS ARE IN MILLIMETERS.

© Renesas Electronics Corporation

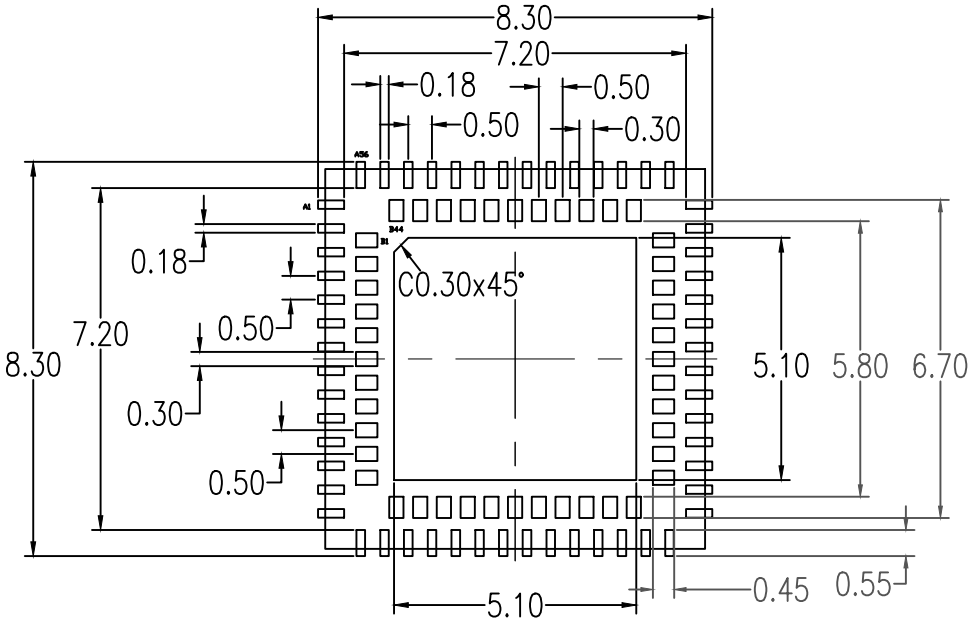

RECOMMENDED LAND PATTERN DIMENSION

NOTES:
1. ALL DIMENSIONS ARE IN MM, ANGLES IN DEGREES.
2. TOP DOWN VIEW, AS VIEW ON PCB.
3. NSMD LAND PATTERN ASSUMED.
4. LAND PATTERN RECOMMENDATION AS PR IPC-7351
   GENERIC REQUIREMENT FOR SURFACE MOUNT DESIGN AND LAND PATTERN.

Package Revision History		
Date Created	Rev No.	Description
August 12, 2019	Rev 00	Initial Release

© Renesas Electronics Corporation

Package Outline Drawing

Package Code: NHG80P1

80-VFQFPN 6.00 x 6.00 x 0.80 mm Body 0.50mm Pitch

PSC-4496-01, Rev 01, Created: Jan 19, 2022

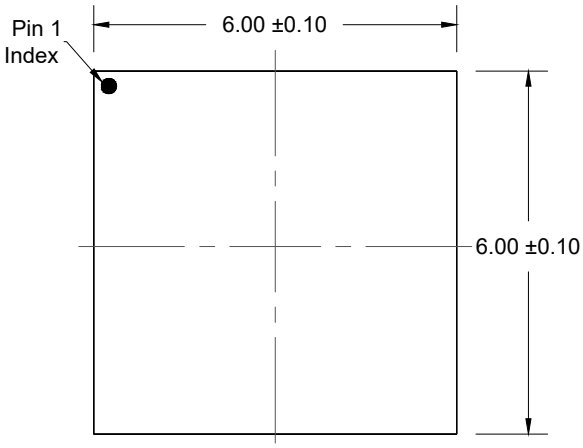

TOP VIEW

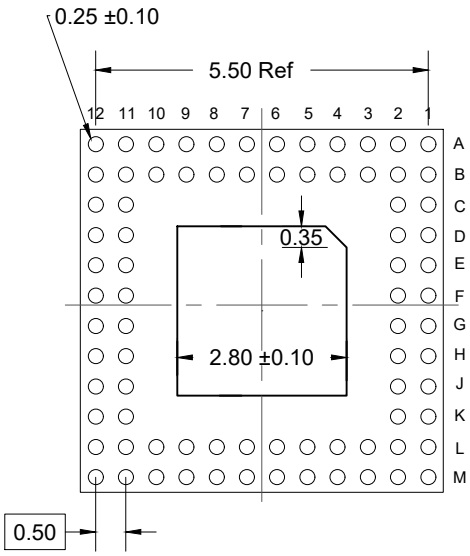

BOTTOM VIEW

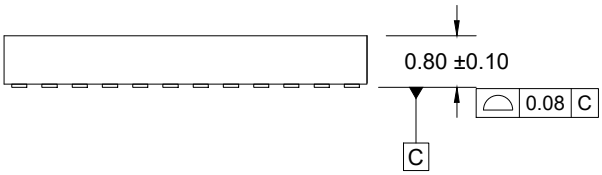

SIDE VIEW

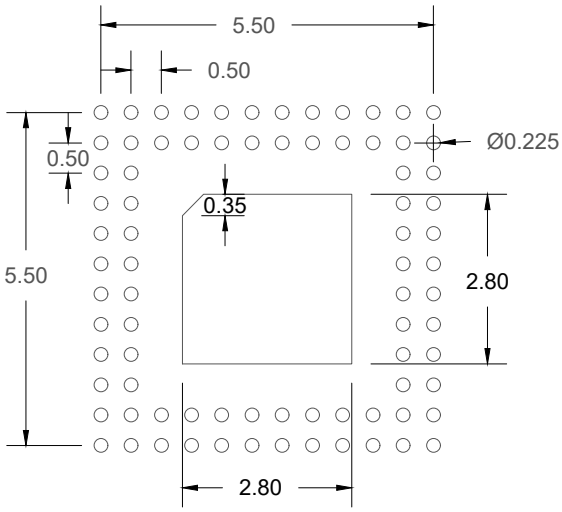

RECOMMENDED LAND PATTERN

(PCB Top View, NSMD Design)

NOTES:

1. JEDEC compatible
2. All dimensions are in mm and angles are in degrees
3. Use ±0.05 mm tolerance for all other dimensions
4. Numbers in ( ) are for reference only

© Renesas Electronics Corporation

Package Outline Drawing

PSC-4208-01
NLG72P1
72-VFQFPN 10.0 x 10.0 x 0.90 mm Body, 0.50 mm Pitch
Rev.05, May 09, 2025

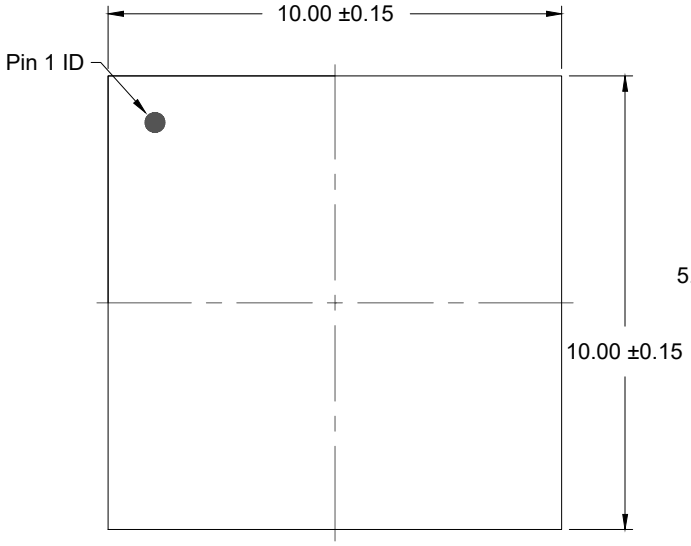

TOP VIEW

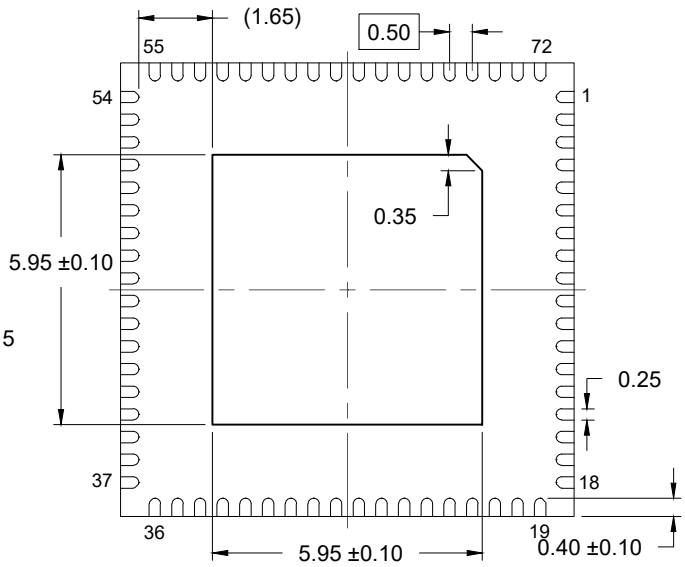

BOTTOM VIEW

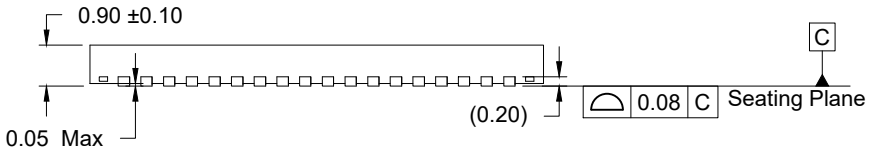

SIDE VIEW

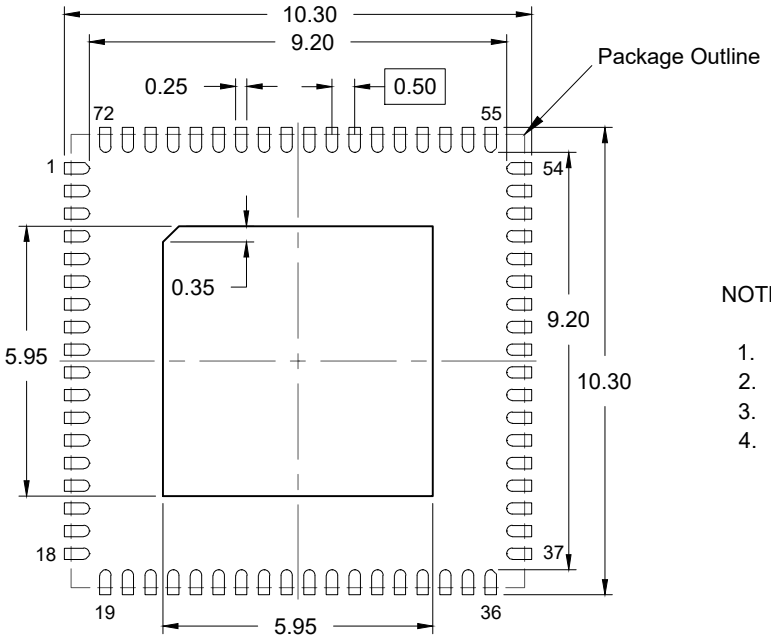

RECOMMENDED LAND PATTERN
(PCB Top View, NSMD Design)

NOTES:

1. JEDEC compatible.
2. All dimensions are in mm and angles are in degrees.
3. Use ±0.05 mm for the non-toleranced dimensions.
4. Numbers in ( ) are for references only.

© Renesas Electronics Corporation

Package Outline Drawing

Package Code: NLG64P7
64-VFQFPN 9.0 x 9.0 x 0.9 mm Body, 0.50mm Pitch
PSC-4147-11, Revision: 02, Date Created: Nov 20, 2023

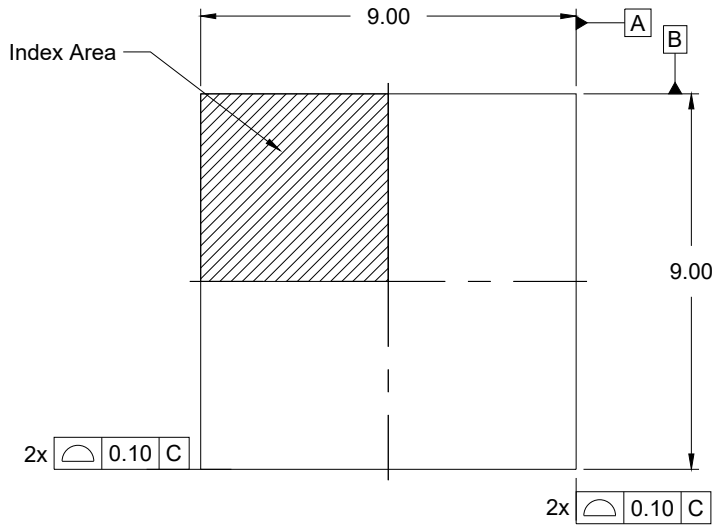

TOP VIEW

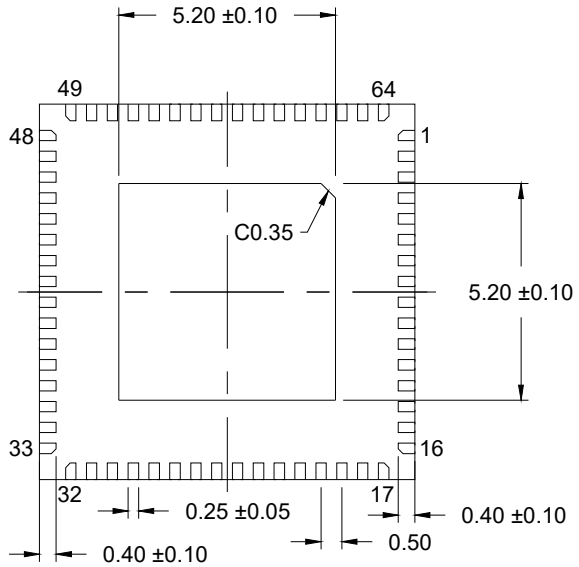

BOTTOM VIEW

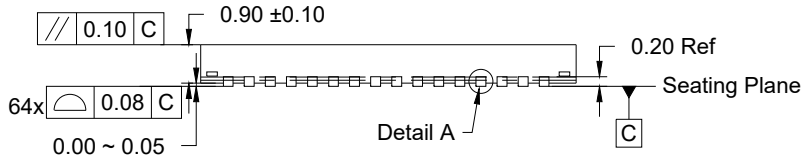

SIDE VIEW

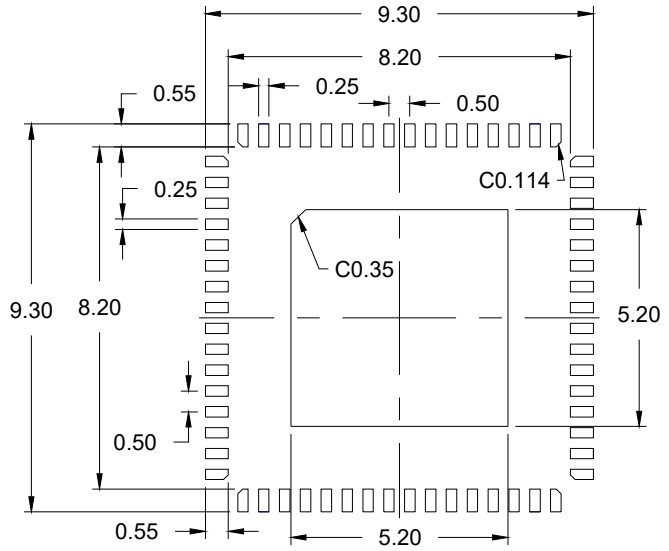

RECOMMENDED LAND PATTERN
(PCB Top View, NSMD Design)

NOTES:

1. JEDEC compatible.
2. All dimensions are in mm and angles are in degrees.
3. Use ±0.05 mm for the non-toleranced dimensions.
4. Numbers in ( ) are for references only.

© Renesas Electronics Corporation

REVISIONS			
REV	DESCRIPTION	DATE	APPROVED
00	INITIAL RELEASE	5/18/16	JH

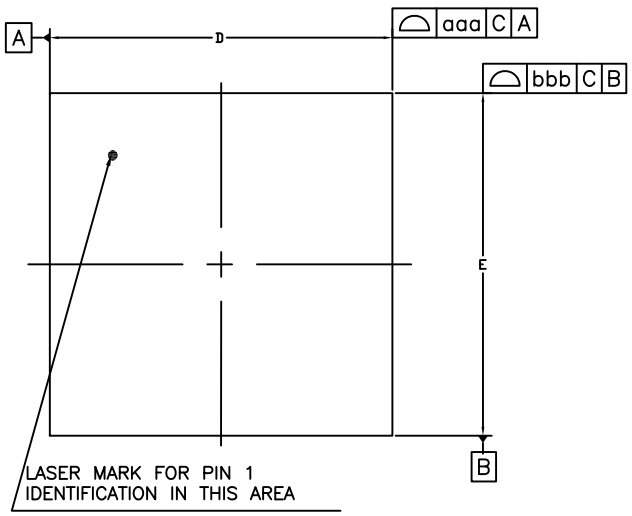

TOP VIEW

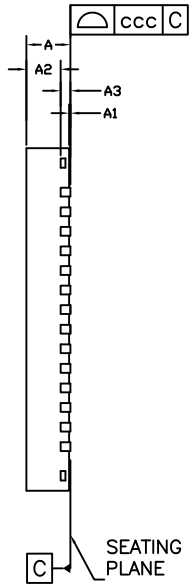

SIDE VIEW

DIMENSION

SYMBOL	MIN.	NOM.	MAX.
A	0.80	0.90	1.00
A1	0.00	0.02	0.05
A2	---	0.65	0.70
A3	0.20 REF.		
b	0.15	0.20	0.25
D	7.00 BSC		
E	7.00 BSC		
D2	5.20	5.30	5.40
E2	5.20	5.30	5.40
L	0.30	0.40	0.50
k	0.450 REF.		
e	0.40 BSC		
aaa	0.10		
bbb	0.10		
ccc	0.05		

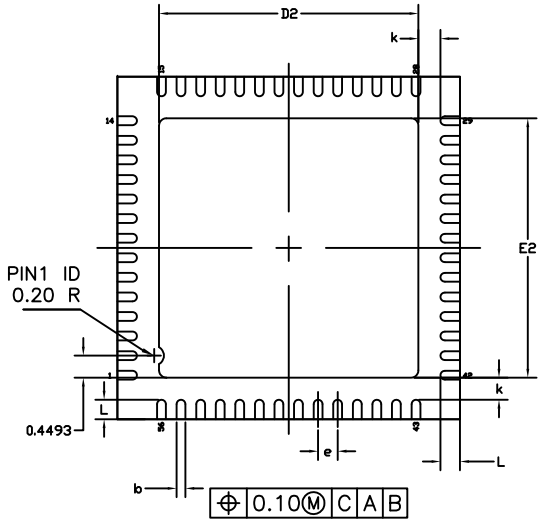

BOTTOM VIEW

NOTES :

1.ALL DIMENSIONS ARE IN MILLIMETERS.
2.DIE THICKNESS ALLOWABLE IS 0.305 mm MAXIMUM(.012 INCHES MAXIMUM)
3.DIMENSIONING & TOLERANCES CONFORM TO ASME Y14.5M. -1994.
4.THE PIN #1 IDENTIFIER MUST BE PLACED ON THE TOP SURFACE OF THE PACKAGE BY USING INDENTATION MARK OR OTHER FEATURE OF PACKAGE BODY.
5.EXACT SHAPE AND SIZE OF THIS FEATURE IS OPTIONAL.
6.PACKAGE WARPAGE MAX 0.08 mm.
7.APPLIED FOR EXPOSED PAD AND TERMINALS. EXCLUDE EMBEDDING PART OF EXPOSED PAD FROM MEASURING.
8.APPLIED ONLY TO TERMINALS.

TOLERANCES UNLESS SPECIFIED
DECIMAL XX± XXX± XXXX±
ANGULAR ±

IDT™ www.IDT.com
6024 Silver Creek Valley Road
San Jose, CA 95138
PHONE: (408) 284-8200
FAX: (408) 284-8591

APPROVALS	DATE
DRAWN RAC	07/01/13
CHECKED	

TITLE
ND/NDG56 PACKAGE OUTLINE
7.0 x 7.0 mm BODY, EPAD 5.30mm SQ
0.40 mm PITCH QFN

SIZE	DRAWING No.	REV
C	PSC-4398-01	00

DO NOT SCALE DRAWING

REVISIONS			
REV	DESCRIPTION	DATE	APPROVED
00	INITIAL RELEASE	5/18/16	JH

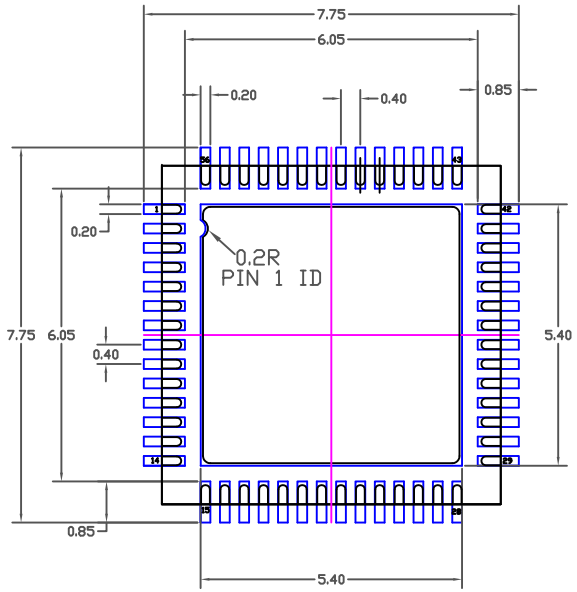

RECOMMENDED LAND PATTERN DIMENSION

NOTES:

1. ALL DIMENSIONS ARE IN mm. ANGLES IN DEGREES.
2. TOP DOWN VIEW. AS VIEWED ON PCB.
3. COMPONENT OUTLINE SHOWS FOR REFERENCE IN BLACK.
4. LAND PATTERN IN BLUE. NSMD PATTERN ASSUMED.
5. LAND PATTERN RECOMMENDATION PER IPC-7351B GENERIC REQUIREMENT FOR MOUNT DESIGN AND LAND PATTERN.

TOLERANCES UNLESS SPECIFIED DECIMAL XX± XXX± XXXX± ANGULAR ±		IDT™ www.IDT.com	6024 Silver Creek Valley Road San Jose, CA 95138 PHONE: (408) 284-8200 FAX: (408) 284-8591
APPROVALS	DATE	TITLE ND/NDG56 PACKAGE OUTLINE 7.0 x 7.0 mm BODY, EPAD 5.30mm SQ 0.40 mm PITCH QFN	
DRAWN RAC	07/01/13		
CHECKED			
		SIZE C	DRAWING No. PSC-4398-01 / REV 00
		DO NOT SCALE DRAWING	SHEET 2 OF 2

Package Outline Drawing

PSC-4292-02
NDG40P2
40-VFQFPN 5.0 x 5.0 x 0.9 mm Body, 0.4 mm Pitch
Rev.03, May 20, 2025

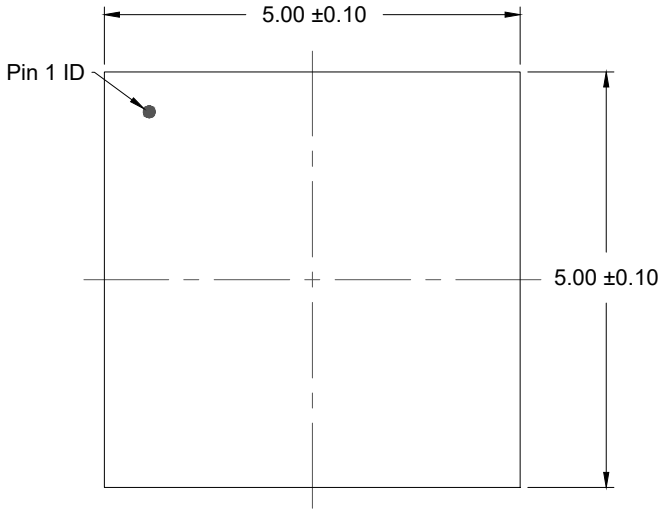

TOP VIEW

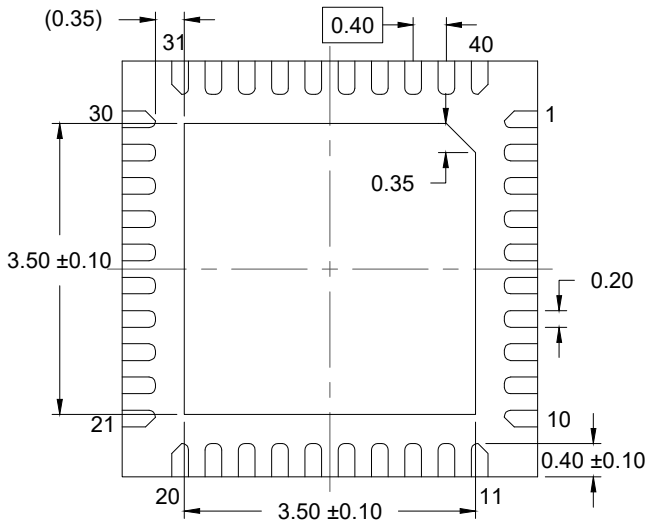

BOTTOM VIEW

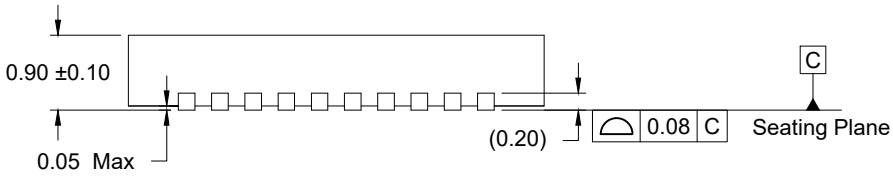

SIDE VIEW

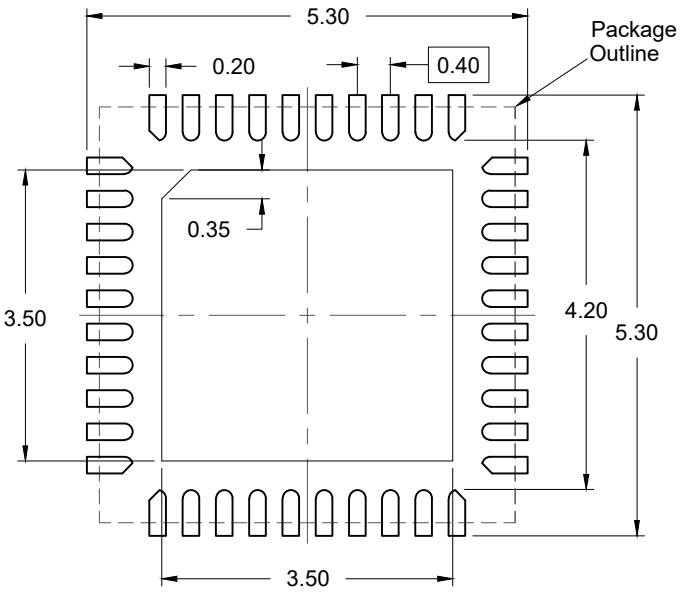

RECOMMENDED LAND PATTERN
(PCB Top View, NSMD Design)

NOTES:

1. JEDEC compatible.
2. All dimensions are in mm and angles are in degrees.
3. Use ±0.05 mm for the non-toleranced dimensions.
4. Numbers in ( ) are for references only.

© Renesas Electronics Corporation

Package Outline Drawing

PSC-4249-01
NDG28P1
28-VFQFPN 4.0 x 4.0 x 0.9 mm Body, 0.4mm Pitch
Rev.03, May 20, 2025

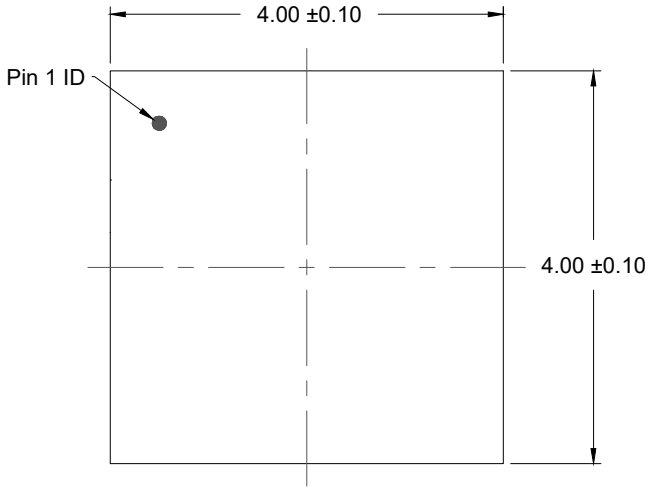

TOP VIEW

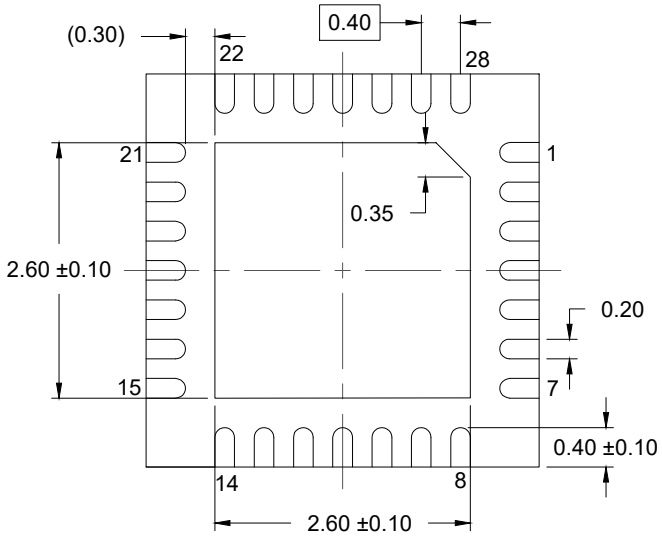

BOTTOM VIEW

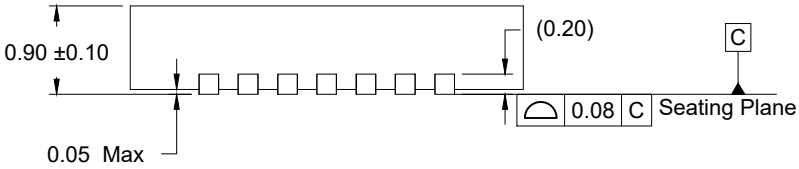

SIDE VIEW

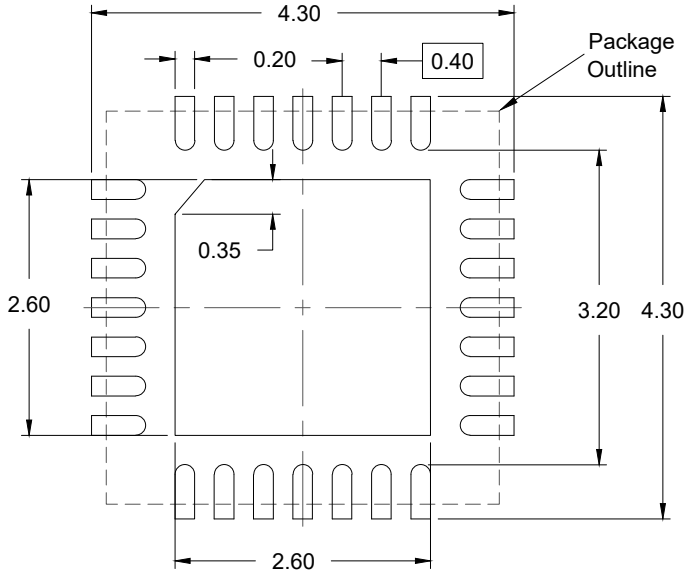

RECOMMENDED LAND PATTERN
(PCB Top View, NSMD Design)

NOTES:

1. JEDEC compatible.
2. All dimensions are in mm and angles are in degrees.
3. Use ±0.05 mm for the non-toleranced dimensions.
4. Numbers in ( ) are for references only.

© Renesas Electronics Corporation

IMPORTANT NOTICE AND DISCLAIMER

RENESAS ELECTRONICS CORPORATION AND ITS SUBSIDIARIES (“RENESAS”) PROVIDES TECHNICAL SPECIFICATIONS AND RELIABILITY DATA (INCLUDING DATASHEETS), DESIGN RESOURCES (INCLUDING REFERENCE DESIGNS), APPLICATION OR OTHER DESIGN ADVICE, WEB TOOLS, SAFETY INFORMATION, AND OTHER RESOURCES “AS IS” AND WITH ALL FAULTS, AND DISCLAIMS ALL WARRANTIES, EXPRESS OR IMPLIED, INCLUDING, WITHOUT LIMITATION, ANY IMPLIED WARRANTIES OF MERCHANTABILITY, FITNESS FOR A PARTICULAR PURPOSE, OR NON-INFRINGEMENT OF THIRD-PARTY INTELLECTUAL PROPERTY RIGHTS.

These resources are intended for developers who are designing with Renesas products. You are solely responsible for (1) selecting the appropriate products for your application, (2) designing, validating, and testing your application, and (3) ensuring your application meets applicable standards, and any other safety, security, or other requirements. These resources are subject to change without notice. Renesas grants you permission to use these resources only to develop an application that uses Renesas products. Other reproduction or use of these resources is strictly prohibited. No license is granted to any other Renesas intellectual property or to any third-party intellectual property. Renesas disclaims responsibility for, and you will fully indemnify Renesas and its representatives against, any claims, damages, costs, losses, or liabilities arising from your use of these resources. Renesas' products are provided only subject to Renesas' Terms and Conditions of Sale or other applicable terms agreed to in writing. No use of any Renesas resources expands or otherwise alters any applicable warranties or warranty disclaimers for these products.

(Disclaimer Rev.1.01)

Corporate Headquarters

TOYOSU FORESIA, 3-2-24 Toyosu,
Koto-ku, Tokyo 135-0061, Japan
www.renesas.com

Trademarks

Renesas and the Renesas logo are trademarks of Renesas Electronics Corporation. All trademarks and registered trademarks are the property of their respective owners.

Contact Information

For further information on a product, technology, the most up-to-date version of a document, or your nearest sales office, please visit www.renesas.com/contact-us/.

© 2026 Renesas Electronics Corporation. All rights reserved.