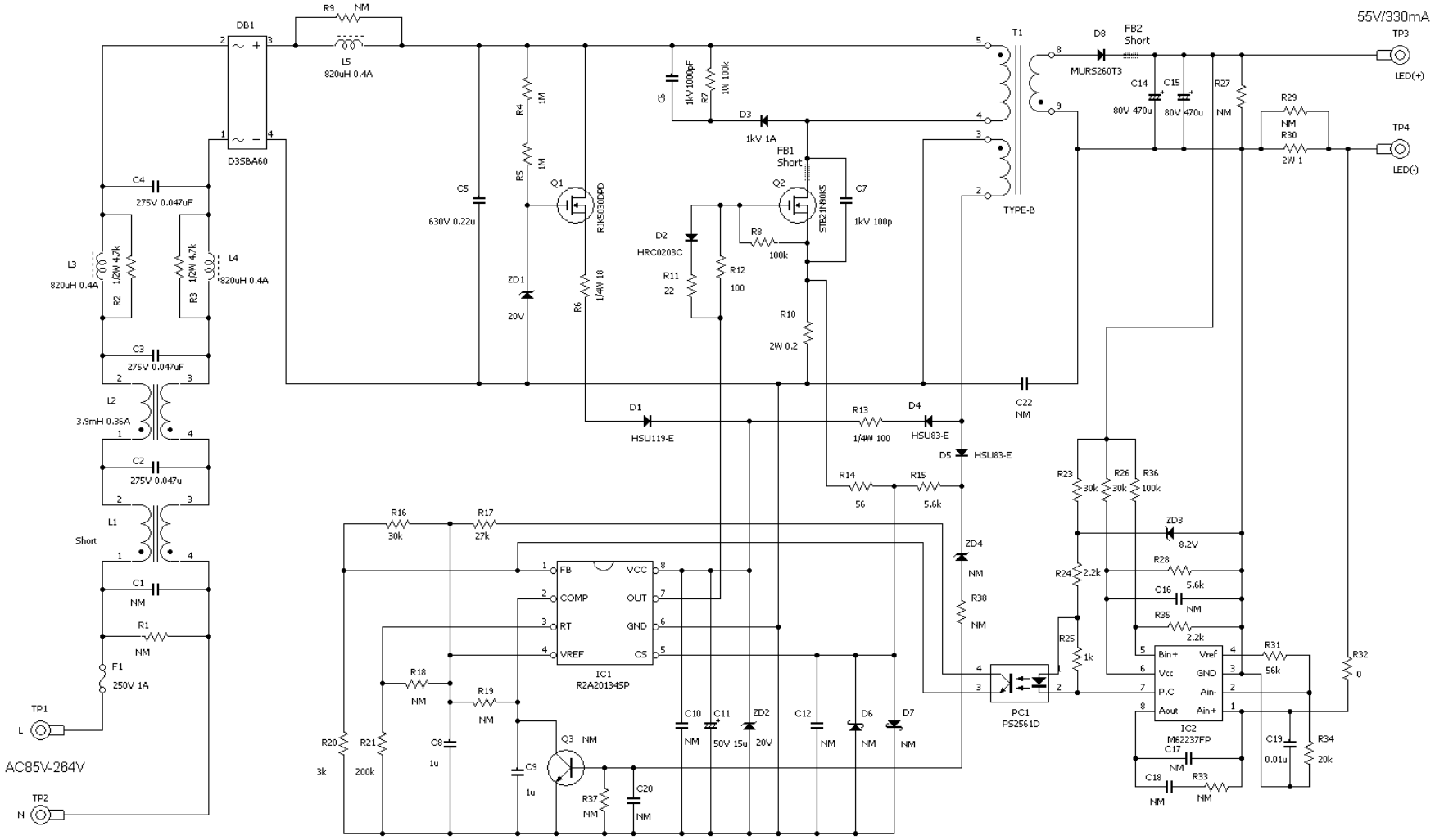
55V/330mA
TP3
LED(+)
TP4
LED(-)
T1
TYPE-B
D8
MURS260T3
FB2
Short
C14
80V 470u
C15
80V 470u
R27
NM
R29
NM
R30
2W 1
DB1
D3SBA60
R9
NM
L5
820uH 0.4A
C4
275V 0.047uF
C3
275V 0.047uF
L3
820uH 0.4A
R2
1/2W 4.7k
R3
1/2W 4.7k
L4
820uH 0.4A
L2
3.9mH 0.36A
C2
275V 0.047u
L1
Short
C1
NM
R1
NM
F1
250V 1A
TP1
L
AC85V-264V
TP2
N
C5
630V 0.22u
R4
1M
R5
1M
Q1
RJK5030DPD
ZD1
20V
R6
1/4W 18
C6
1kV 1000pF
R7
1W 100k
D3
1kV 1A
FB1
Short
Q2
STB21N90K5
C7
1kV 100p
D2
HRC0203C
R8
100k
R11
22
R12
100
R10
2W 0.2
D1
HSU119-E
R13
1/4W 100
D4
HSU83-E
D5
HSU83-E
C22
NM
R14
56
R15
5.6k
R16
30k
R17
27k
IC1
R2A20134SP
FB
COMP
RT
VREF
VCC
OUT
GND
CS
R18
NM
R19
NM
R20
3k
R21
200k
C8
1u
C9
1u
Q3
NM
R37
NM
C20
NM
C10
NM
C11
50V 15u
ZD2
20V
C12
NM
D6
NM
D7
NM
ZD4
NM
R38
NM
PC1
PS2561D
R23
30k
R26
30k
R36
100k
ZD3
8.2V
R24
2.2k
R28
5.6k
C16
NM
R35
2.2k
R25
1k
IC2
M62237FP
Bin+
Vcc
P.C
Aout
Vref
GND
Ain-
Ain+
R31
56k
R32
0
C17
NM
C18
NM
R33
NM
C19
0.01u
R34
20k