Engineering Change Notice

The following table contains a list of engineering changes that are not reflected in the Tsi381 Evaluation Board Schematics.

Table 1: ECN for E2000_AS001_05 (Board order number Tsi381-RDK1 V2.0)

No.	Item(s)	Original	Change To
1	Tsi381 Device	Tsi381-66ILZ1	Tsi381-66ILZ2
2	3.3Vaux on J1, J2, J36, J37[a]	No connection	Short pin A14 (3.3Vaux) to pin A16 (VIO_PCI) with 0-Ohm (0603) resistor

a. 3.3Vaux does not provide power to plug-in cards when the system is powered down.

Table 2: ECN for E2000_AS001_04 (Board order number Tsi381-RDK1 V2.1)

No.	Item(s)	Original	Change To
1	Tsi381 Device	Tsi381-66ILZ1	Tsi381-66ILZ2[a]
2	3.3Vaux on J1, J2, J36, J37[b]	No connection	Short pin A14 (3.3Vaux) to pin A16 (VIO_PCI) with 0-Ohm (0603) resistor

a. Ball K1 was removed from the Tsi381 device to allow the TEST_SPARE[2] signal to be detected as logic high. This version of the evaluation board is intended to support applications that require PCI bus parking on the Tsi381.
b. 3.3Vaux does not provide power to plug-in cards when the system is powered down.

Tsi381 Evaluation Board Schematic

TABLE OF CONTENTS

Sheet 1 - Table of Contents
Sheet 2 - Block Diagram
Sheet 3 - Tsi381 PCIe/Misc
Sheet 4 - PCIe Connectors
Sheet 5 - Tsi381 PCI Interface
Sheet 6 - PCI Slot 0 (R/A Top)
Sheet 7 - PCI Slot 1 (Vertical)
Sheet 8 - PCI Slot 3 (Vertical)
Sheet 9 - PCI Slot 2 (Vertical)
Sheet 10 - Clock Distribution
Sheet 11 - Power Sources
Sheet 12 - Tsi381 Power/Regulators
Sheet 13 - PCI Regulators
Sheet 14 - Test Devices
Sheet 15 - Test Devices Cont'd

TITLE : TABLE OF CONTENTS			
SIZE C	DRAWING NUMBER : 60E2000_SC001_03	Version: 1.0	DESIGNER :
LAST MODIFIED DATE : 7-24-2007_17:10		SHEET 1 OF 15	

BLOCK DIAGRAM

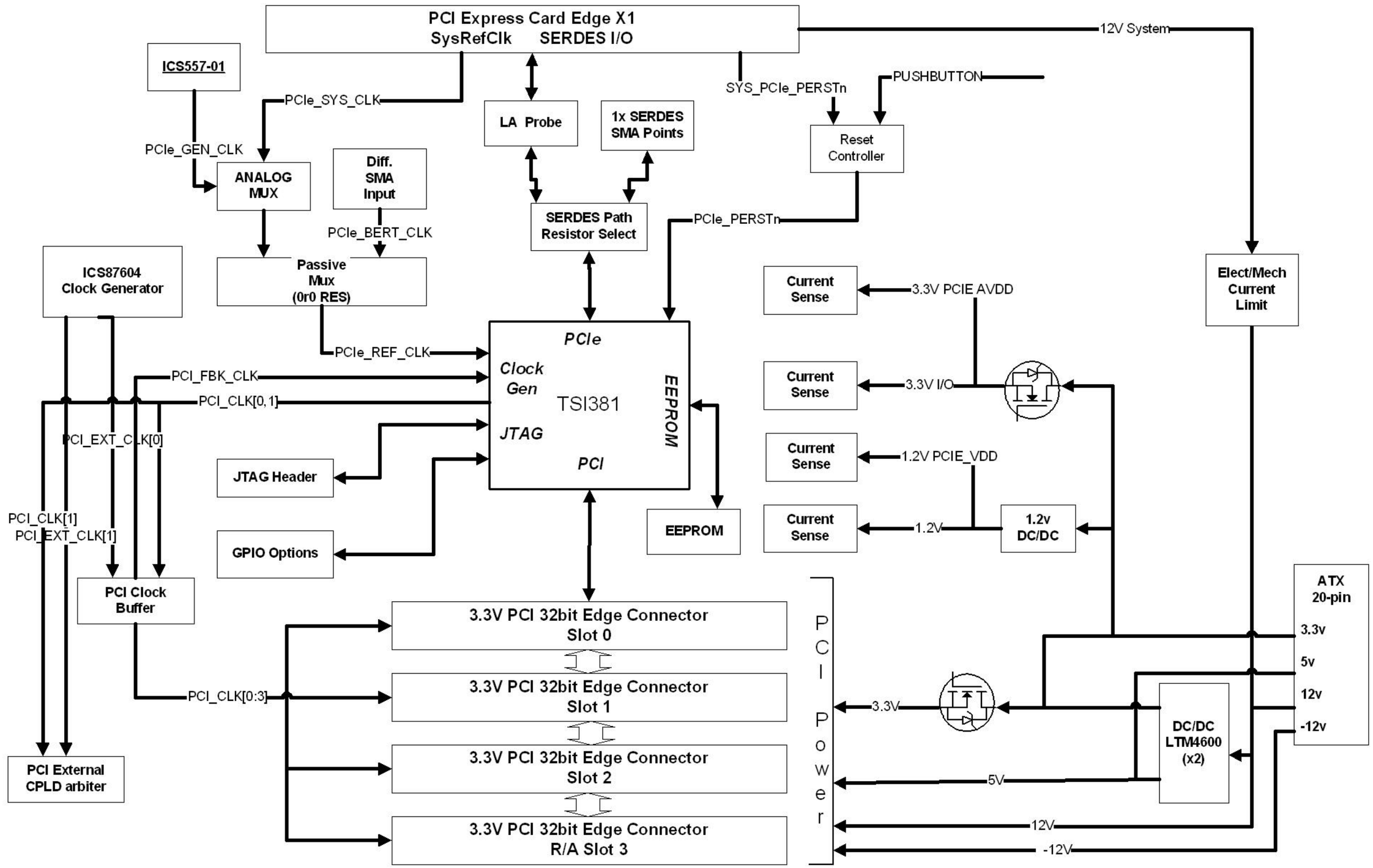

TITLE : BLOCK DIAGRAM			
SIZE C	DRAWING NUMBER : 60E2000_SC001_03	Version: 1.0	DESIGNER :
LAST MODIFIED DATE : 5-3-2007_11:54		SHEET 2 OF 15	

TSI381 PCIE/MISC INTERFACE

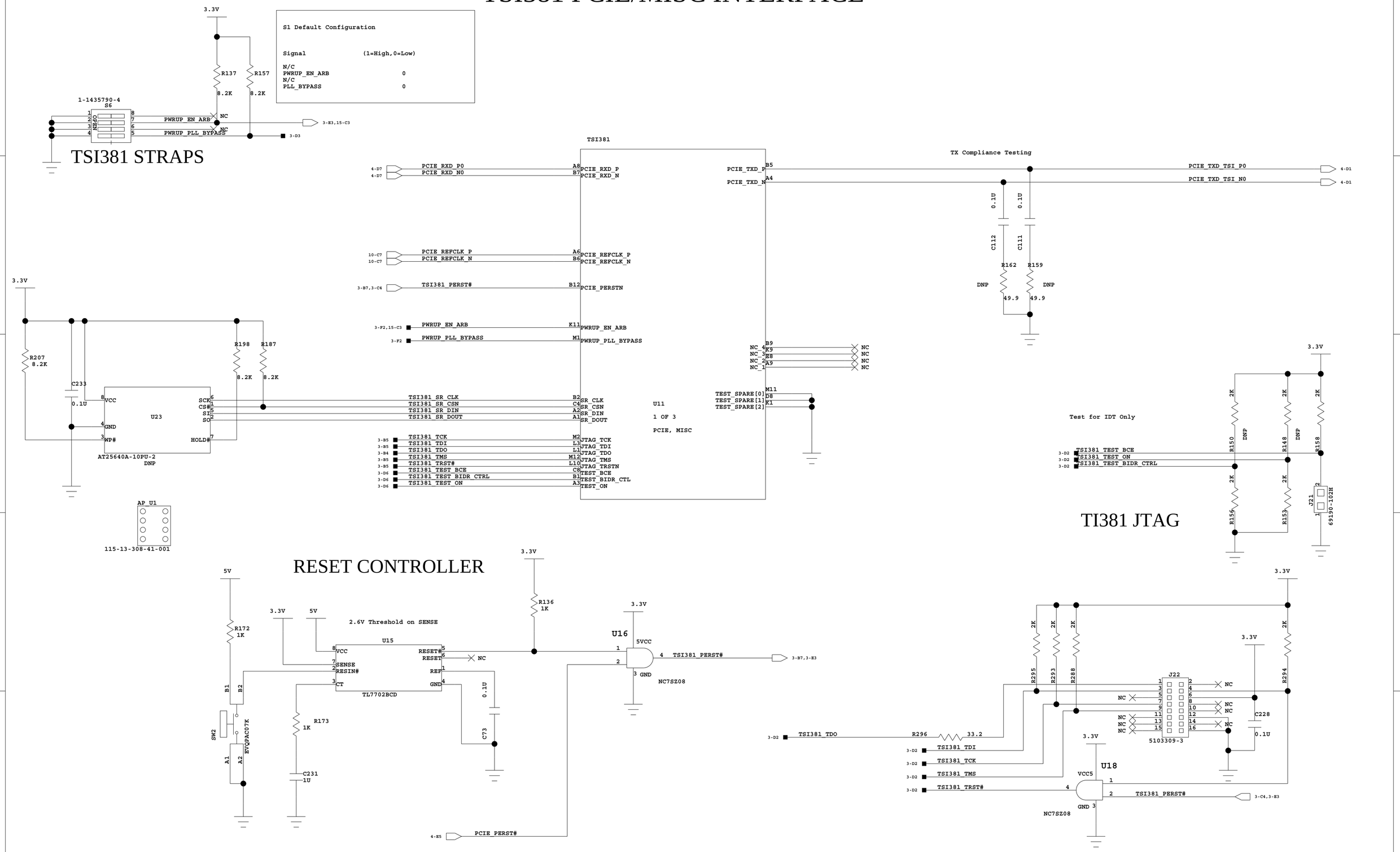

TITLE :

Tsi381 PCIE/MISC

SIZE	DRAWING NUMBER :	Version:	DESIGNER :
C	60E2000_SC001_03	1.0	

LAST MODIFIED DATE : 7-24-2007_17:09

SHEET 3 OF 15

PCIE CONNECTORS

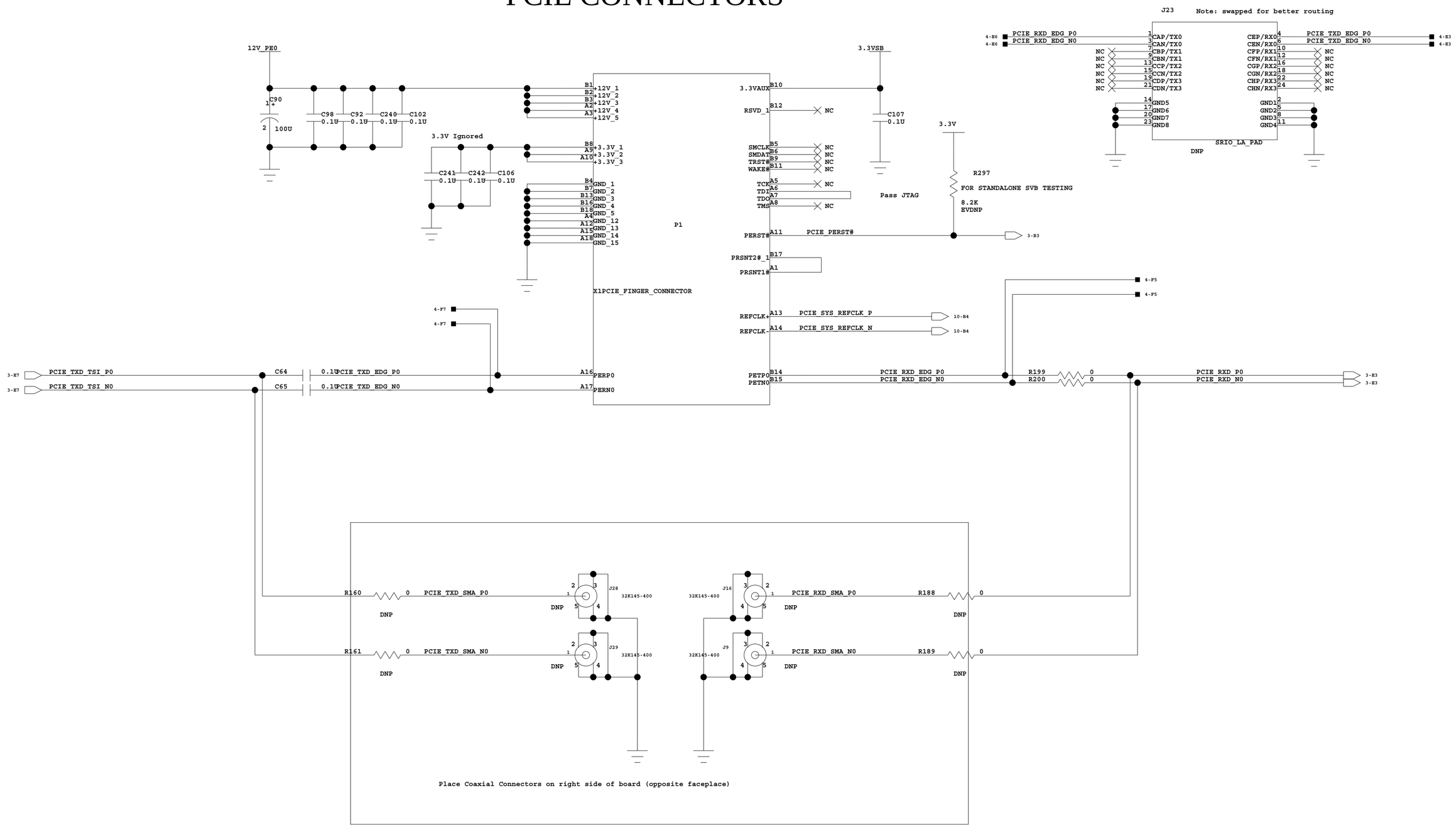

TITLE :

PCIE CONNECTORS

SIZE	DRAWING NUMBER :	Version:	DESIGNER :
C	60E2000_SC001_03	1.0	

LAST MODIFIED DATE :

6-15-2007_14:56

SHEET 4 OF 15

TSI381 PCI INTERFACE

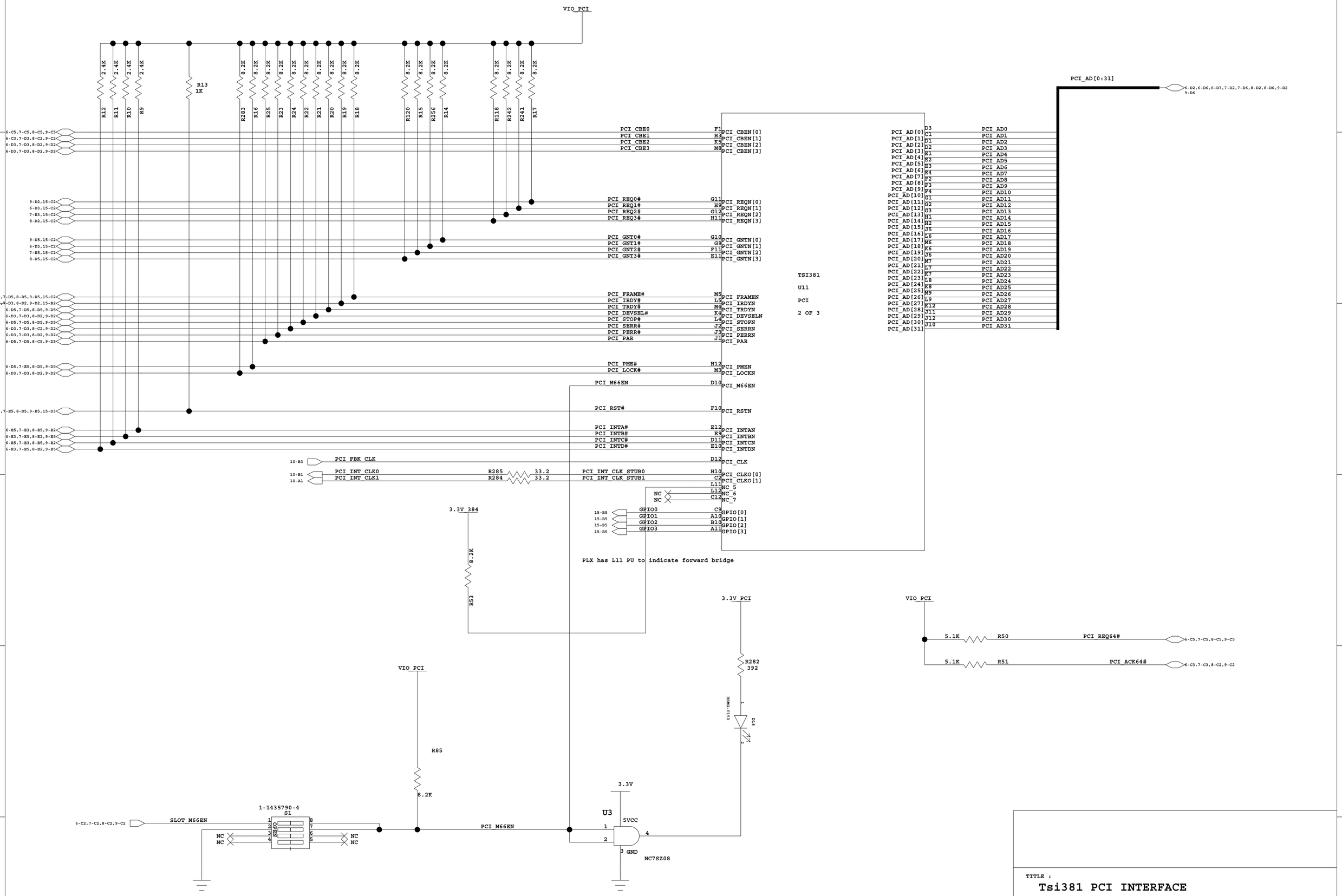

TITLE : Tsi381 PCI INTERFACE			
SIZE C	DRAWING NUMBER : 60E2000_SC001_03	Version: 1.0	DESIGNER :
LAST MODIFIED DATE : 7-24-2007_17:06		SHEET 5 OF 15	

PCI SLOT 0 (R/A)

IDSEL AD16

- Required Interrupt Routing
  - SLOT : BRIDGE
  - INTA -> INTA
  - INTB -> INTB
  - INTC -> INTC
  - INTD -> INTD
- PCI Clock PCI_CLK0
- PCI Arbitration PCI_GNT#1/PCI_REQ#1

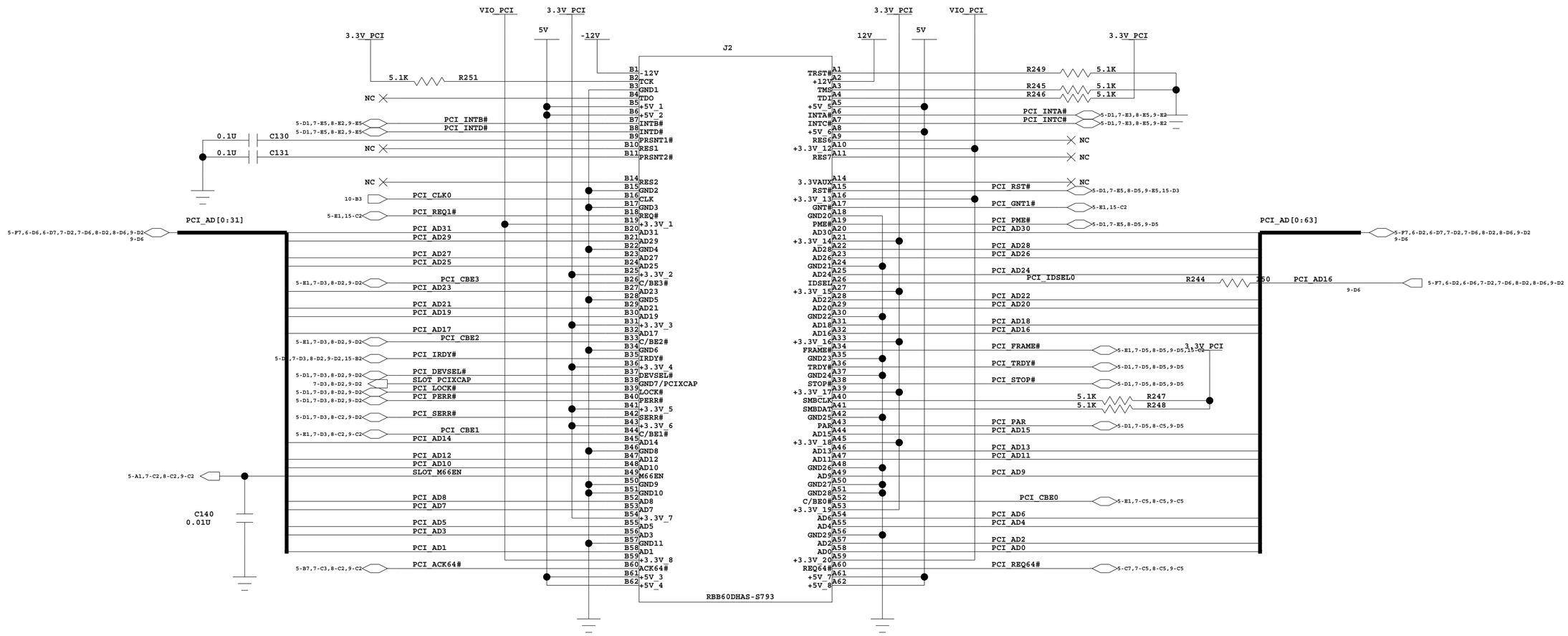

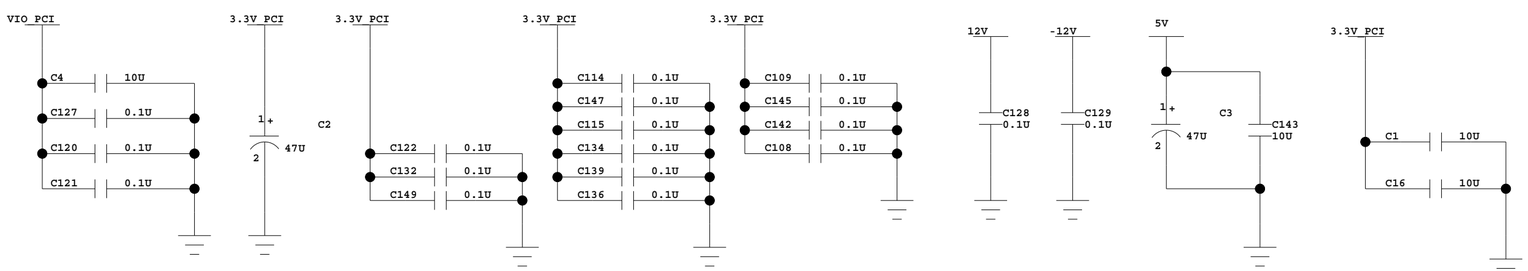

TITLE : PCI SLOT 0			
SIZE C	DRAWING NUMBER : 60E2000_SC001_03	Version: 1.0	DESIGNER :
LAST MODIFIED DATE : 7-25-2007_15:13		SHEET 6 OF 15	

PCI SLOT 1 (Vertical)

IDSEL AD17

- Required Interrupt Routing

  SLOT : BRIDGE

  INTA -> INTB

  INTB -> INTC

  INTC -> INTD

  INTD -> INTA

- PCI Clock PCI_CLK1

- PCI Arbitration PCI_GNT#2/PCI_REQ#2

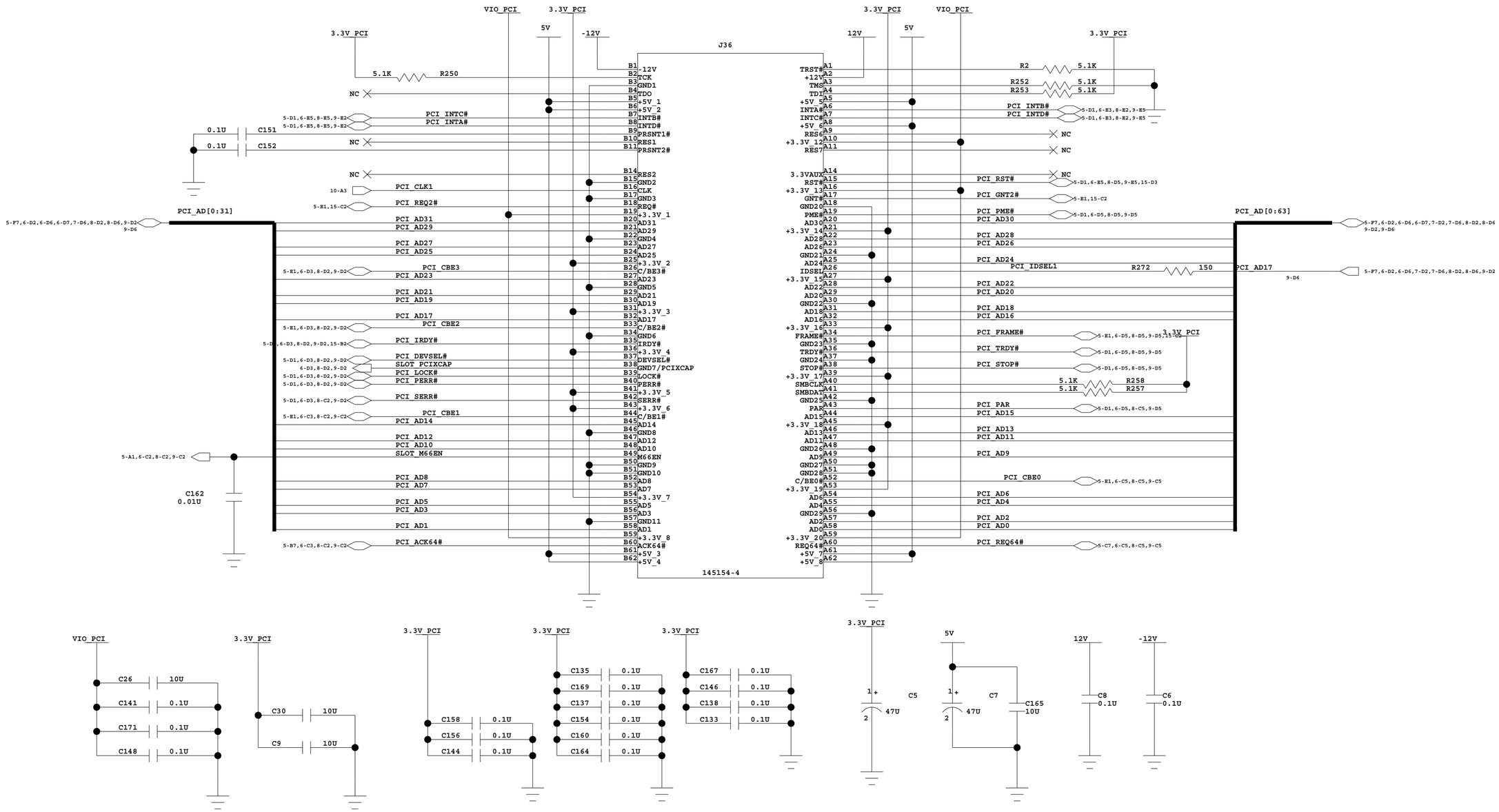

TITLE : PCI SLOT 1			
SIZE C	DRAWING NUMBER : 60E2000_SC001_03	Version: 1.0	DESIGNER :
LAST MODIFIED DATE : 7-25-2007_15:13		SHEET 7 OF 15	

PCI SLOT 3 (Vertical)

IDSEL AD18

- Required Interrupt Routing

  SLOT : BRIDGE

  INTA -> INTC

  INTB -> INTD

  INTC -> INTA

  INTD -> INTB

- PCI Clock PCI_CLK2

- PCI Arbitration PCI_GNT#3/PCI_REQ#3

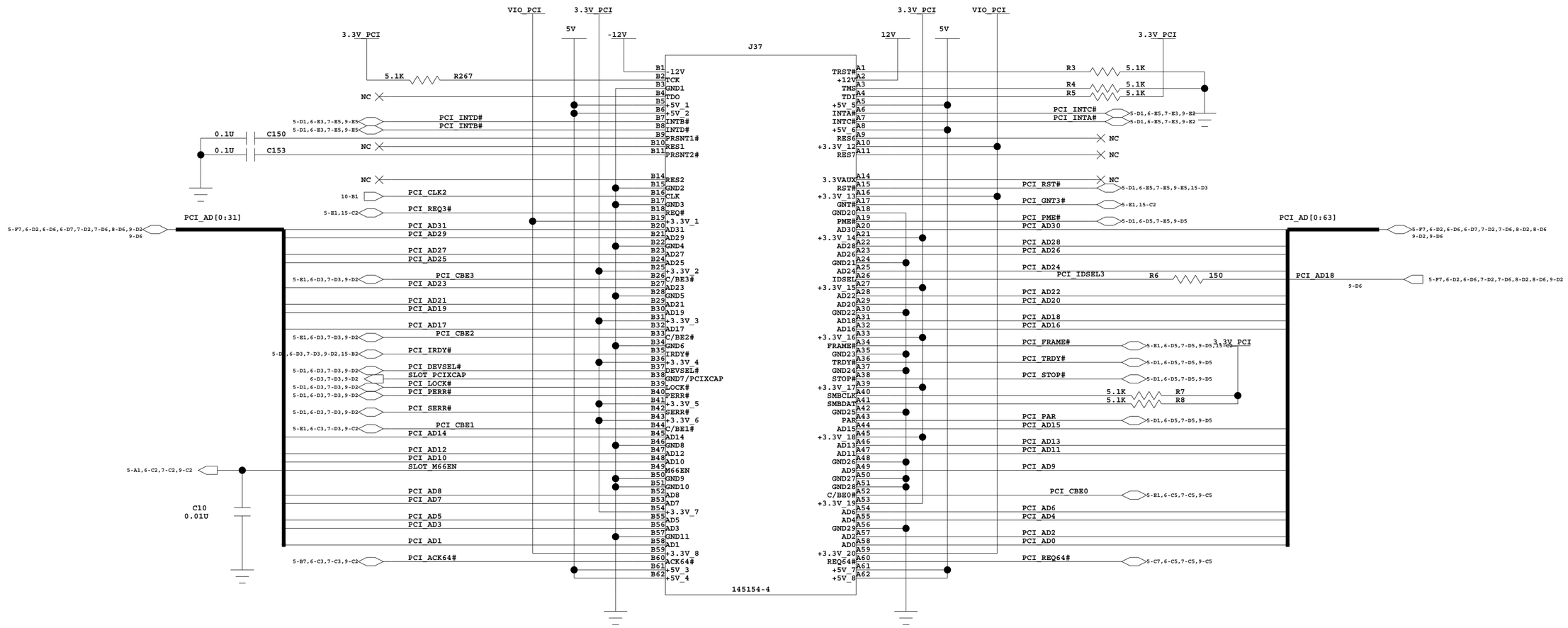

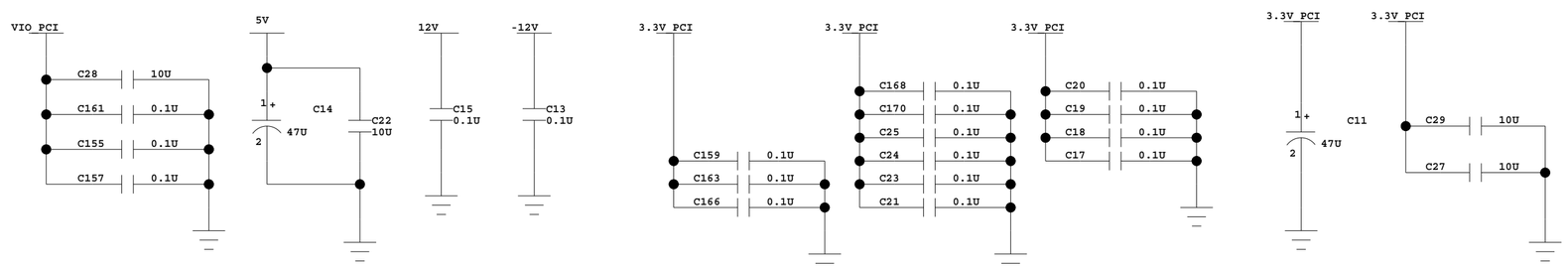

TITLE : PCI SLOT 3

SIZE	DRAWING NUMBER :	Version:	DESIGNER :
C	60E2000_SC001_03	1.0	

LAST MODIFIED DATE : 7-25-2007_15:14

SHEET 8 OF 15

PCI SLOT 2 (Vertical)

IDSEL AD19

- Required Interrupt Routing

  SLOT : BRIDGE

  INTA -> INTD

  INTB -> INTA

  INTC -> INTB

  INTD -> INTC

- PCI Clock PCI_CLK3

- PCI Arbitration PCI_GNT#0/PCI_REQ#0

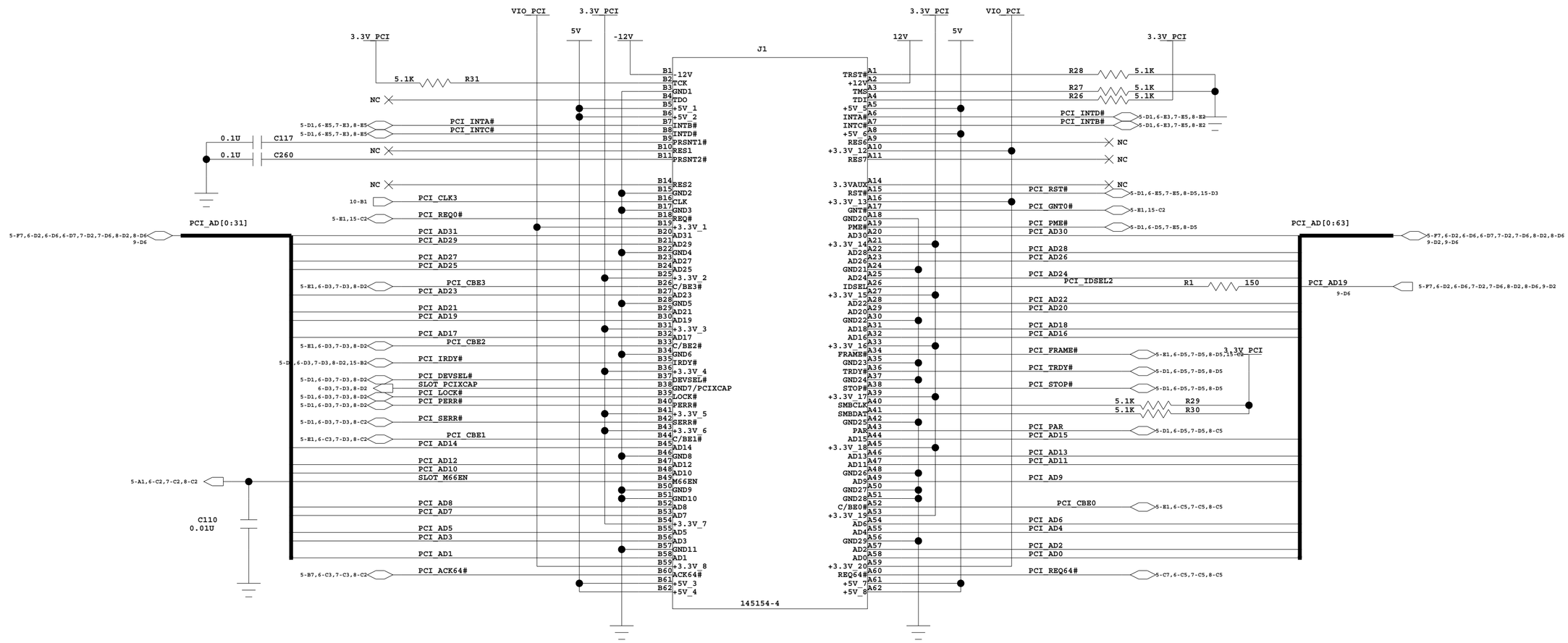

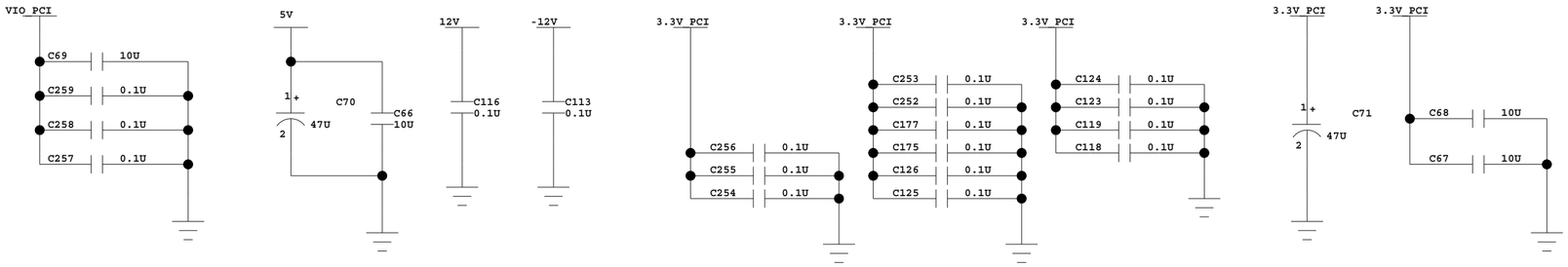

TITLE :

PCI SLOT 2

SIZE	DRAWING NUMBER :	Version:	DESIGNER :
C	60E2000_SC001_03	1.0	

LAST MODIFIED DATE : 7-25-2007_15:14

SHEET 9 OF 15

CLOCK DISTRIBUTION

PCI EXTERNAL CLOCK

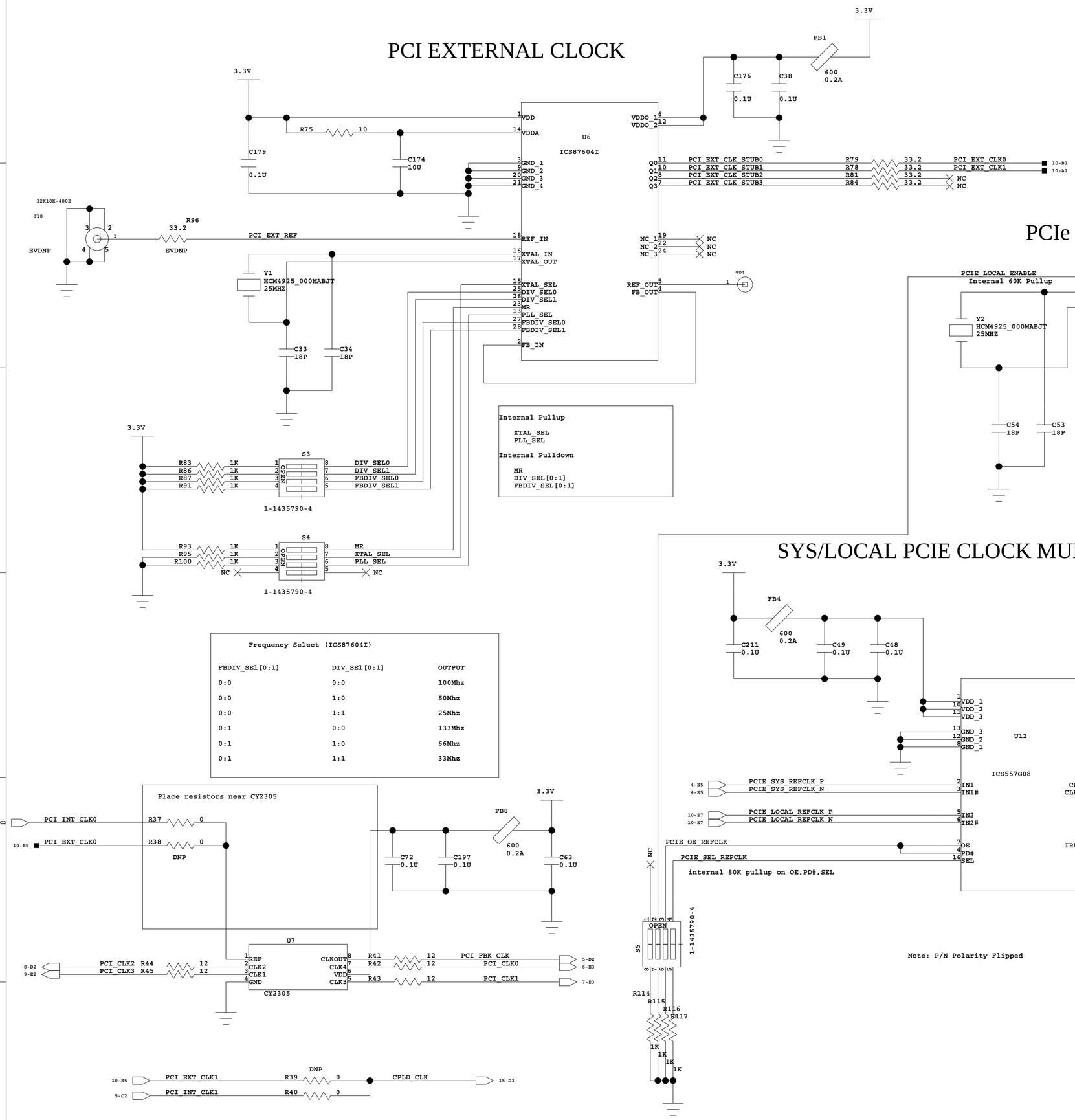

Frequency Select (ICS87604I)

FBDIV_SEl[0:1]	DIV_SEl[0:1]	OUTPUT
0:0	0:0	100Mhz
0:0	1:0	50Mhz
0:0	1:1	25Mhz
0:1	0:0	133Mhz
0:1	1:0	66Mhz
0:1	1:1	33Mhz

PCIe LOCAL CLOCKGEN

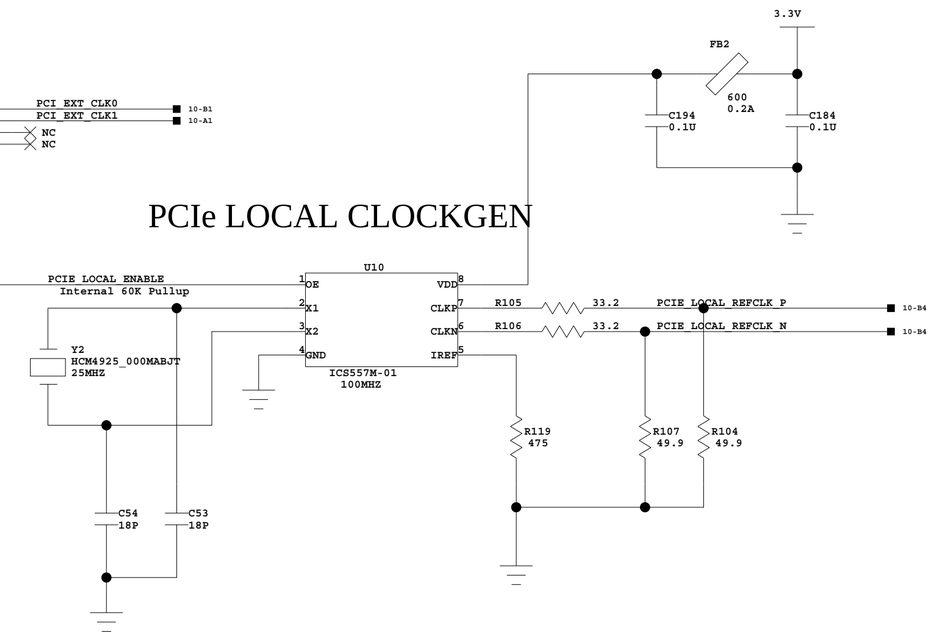

SYS/LOCAL PCIE CLOCK MULTIPLEXER

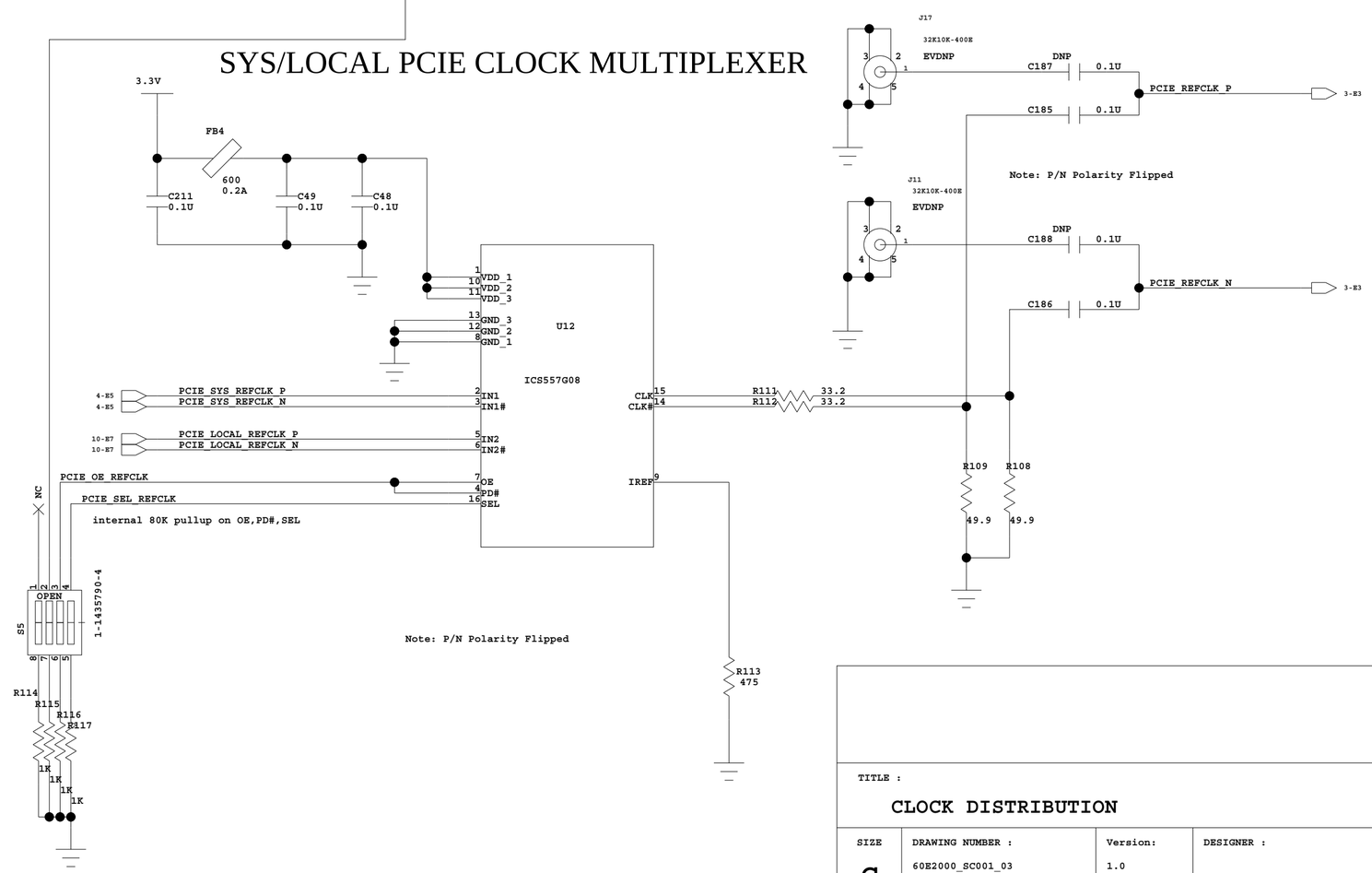

TITLE :

CLOCK DISTRIBUTION

SIZE	DRAWING NUMBER :	Version:	DESIGNER :
C	60E2000_SC001_03	1.0	

LAST MODIFIED DATE : 7-16-2007_16:25

SHEET 10 OF 15

POWER SOURCES

ATX

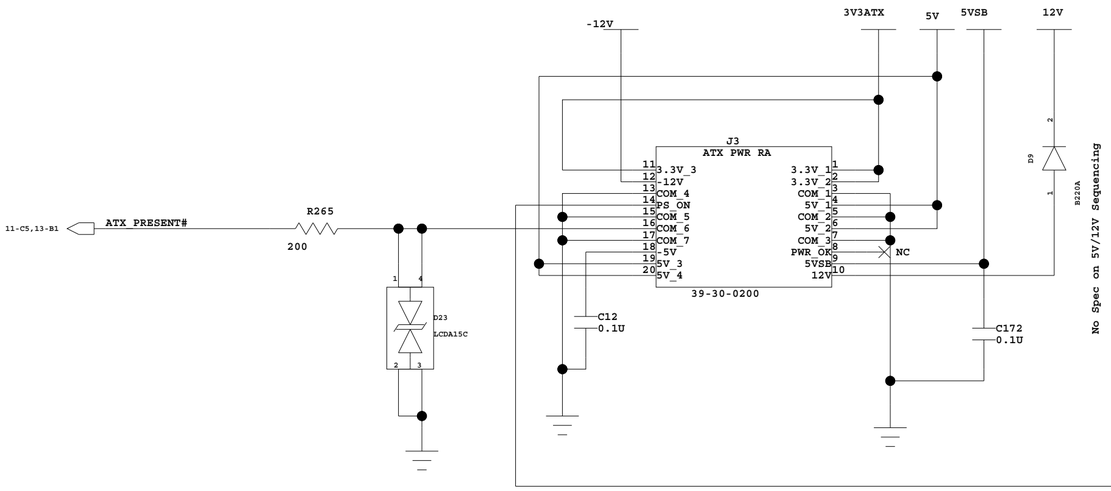

ATX SUPPLY TOGGLE

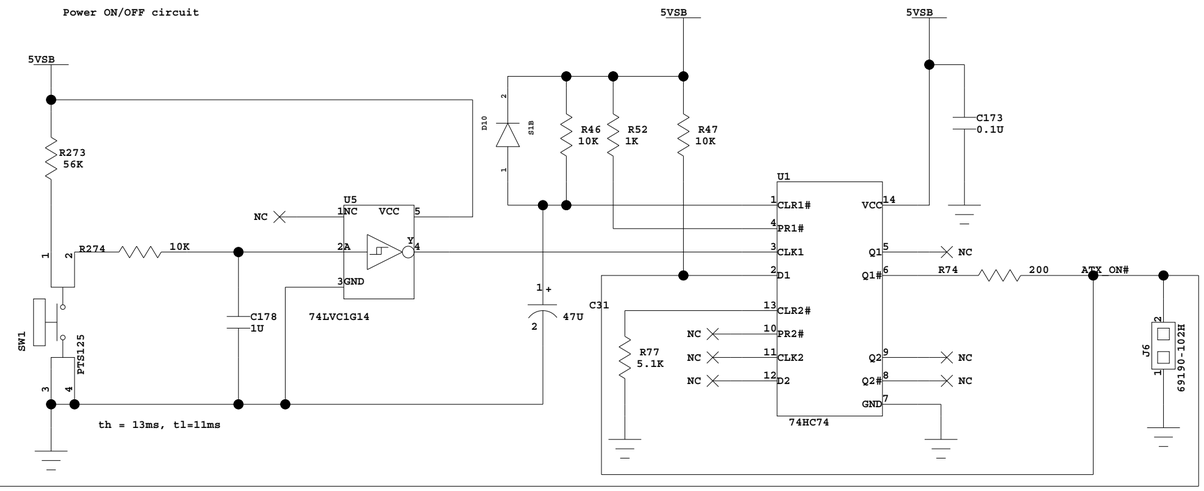

GND TESTPOINTS

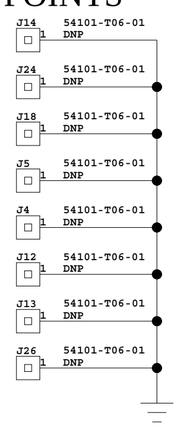

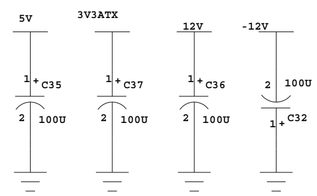

BOARD SEQUENCING

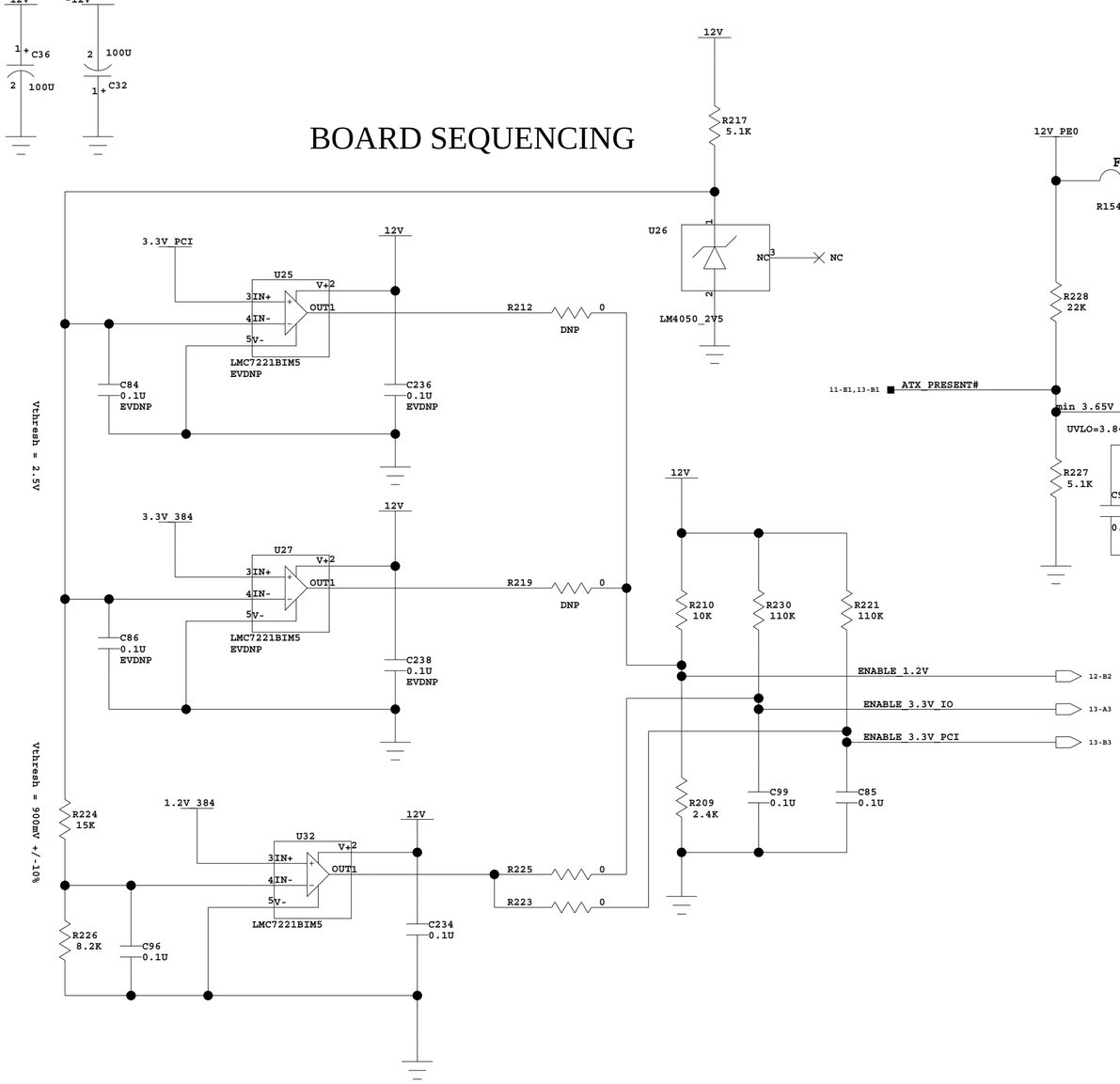

SYS SUPPLY SWITCH

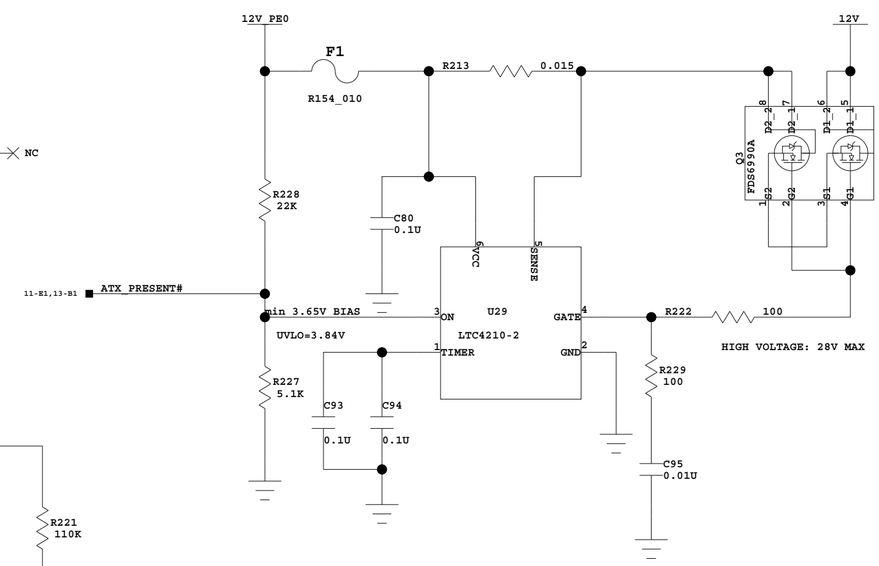

POWER STATUS

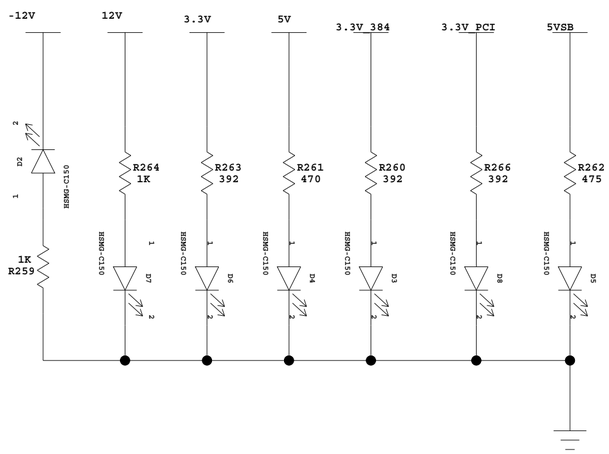

TITLE : POWER SOURCES			
SIZE C	DRAWING NUMBER : 60E2000_SC001_03	Version: 1.0	DESIGNER :
LAST MODIFIED DATE : 6-15-2007_14:56		SHEET 11 OF 15	

TSI381 POWER/REGULATORS

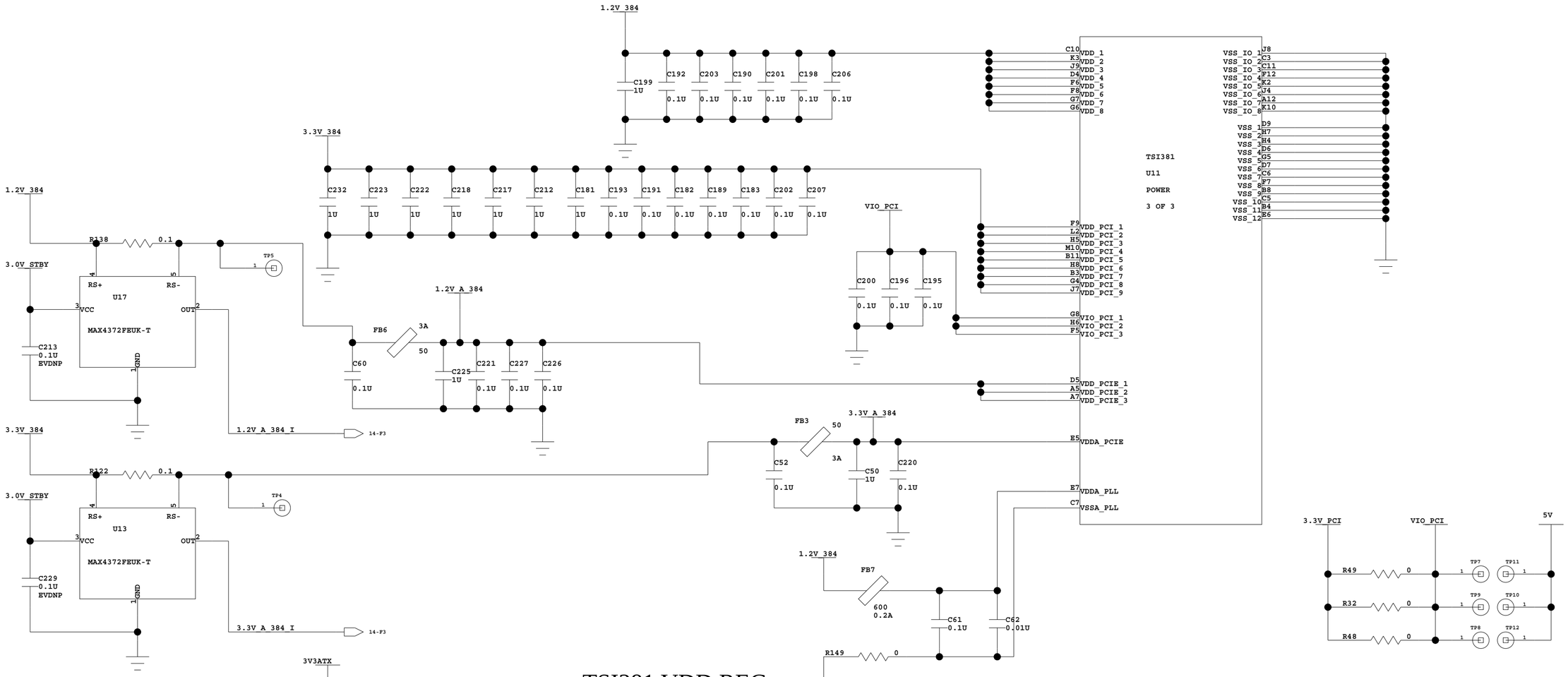

TSI381 VDD REG

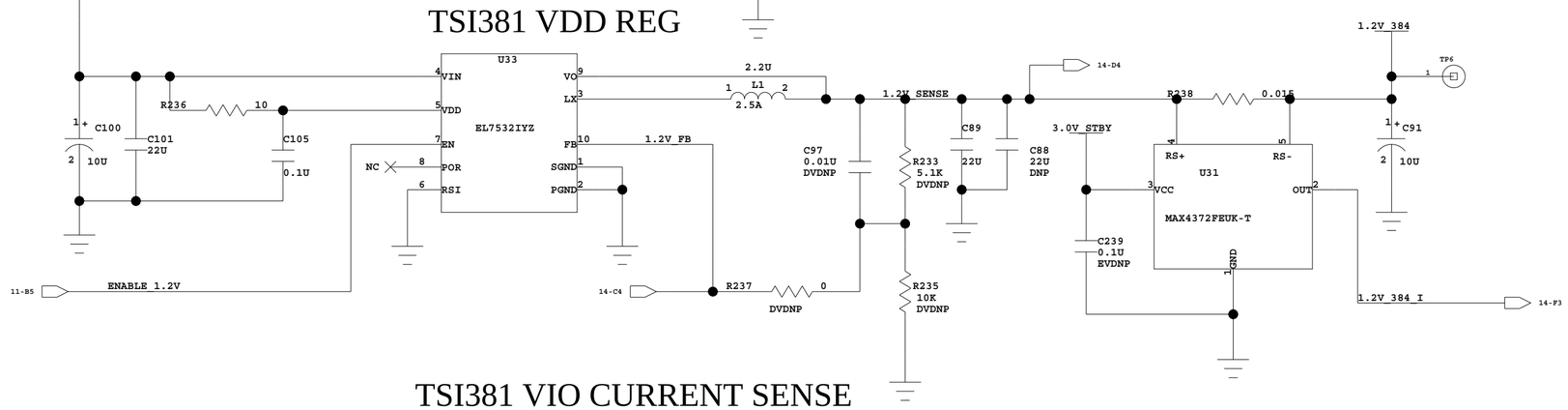

TSI381 VIO CURRENT SENSE

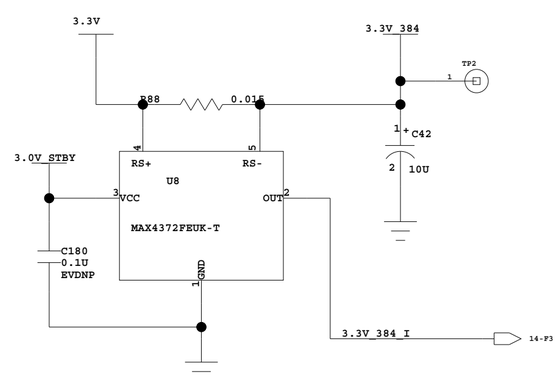

TITLE :

Tsi381 POWER/REGULATORS

SIZE	DRAWING NUMBER :	Version:	DESIGNER :
C	60E2000_SC001_03	1.0	

LAST MODIFIED DATE : 6-15-2007_14:56

SHEET 12 OF 15

PCI POWER REGULATORS

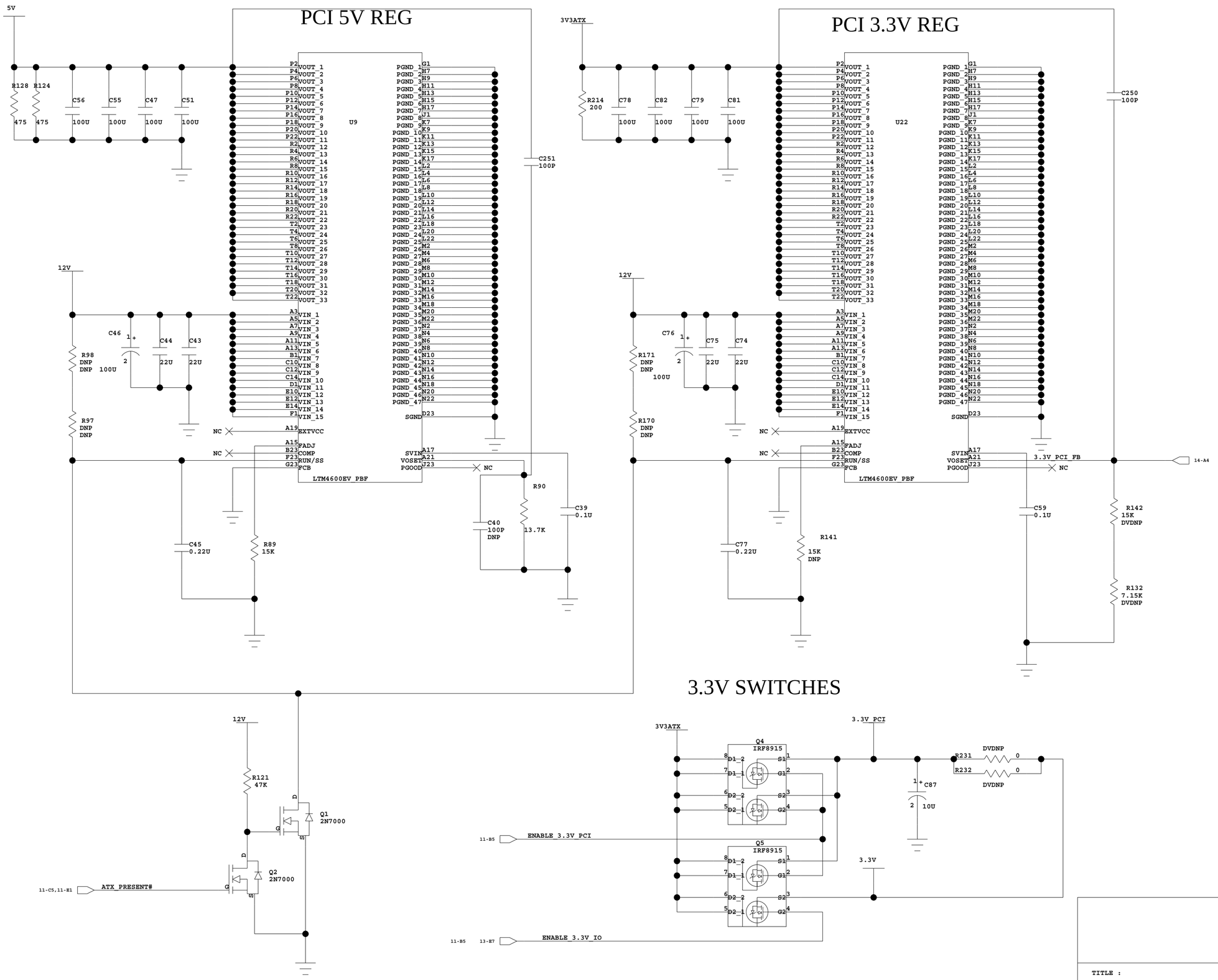

3.3V SWITCHES

TITLE : PCI POWER REGULATORS			
SIZE C	DRAWING NUMBER : 60E2000_SC001_03	Version: 1.0	DESIGNER :
LAST MODIFIED DATE : 6-15-2007_14:48		SHEET 13 OF 15	

TEST DEVICES

TSI381 V/I ADC

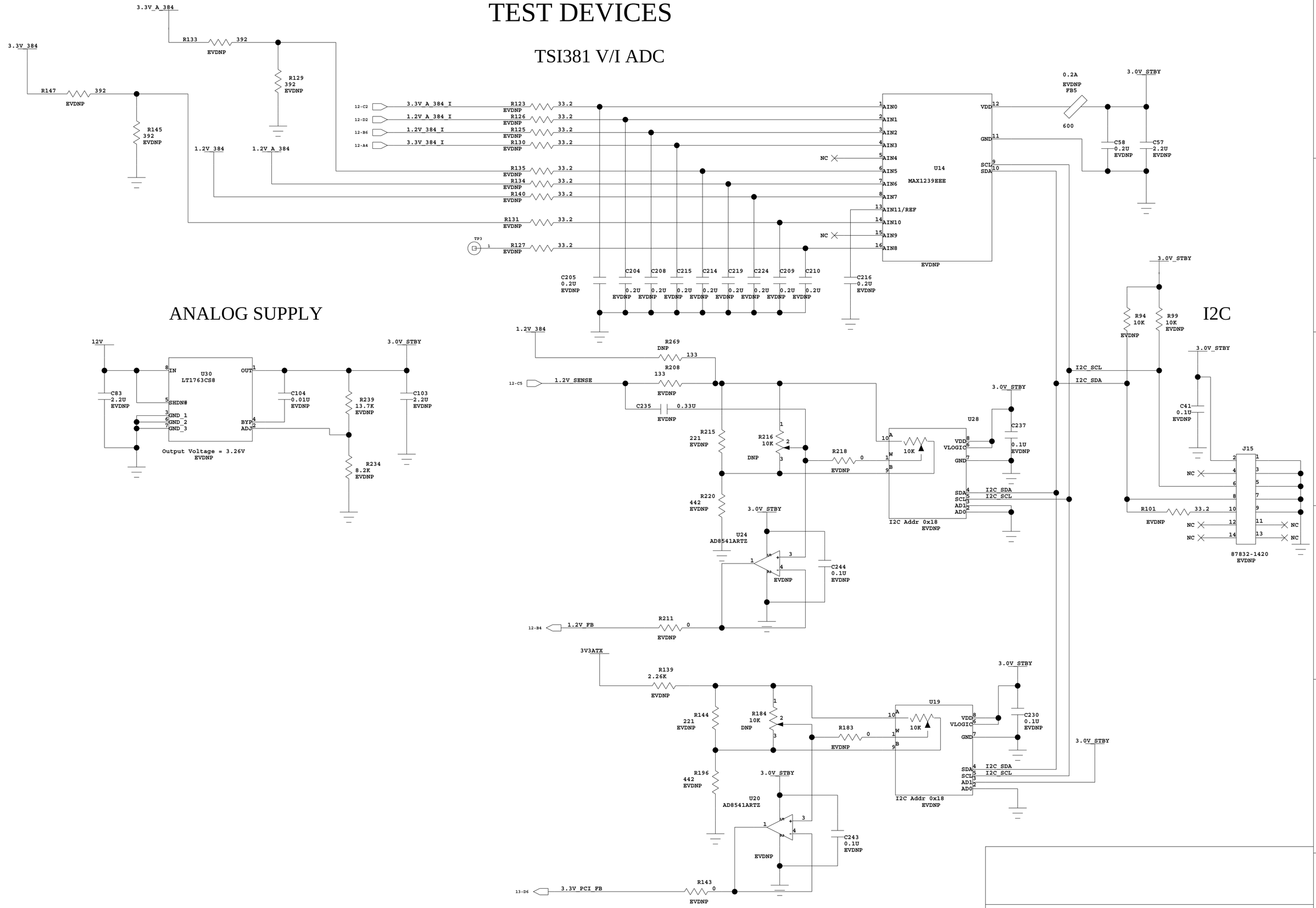

TITLE :

TEST DEVICES

SIZE	DRAWING NUMBER :	Version:	DESIGNER :
C	60E2000_SC001_03	1.0	

LAST MODIFIED DATE : 6-15-2007_14:56

SHEET 14 OF 15

TEST DEVICES CONT'D

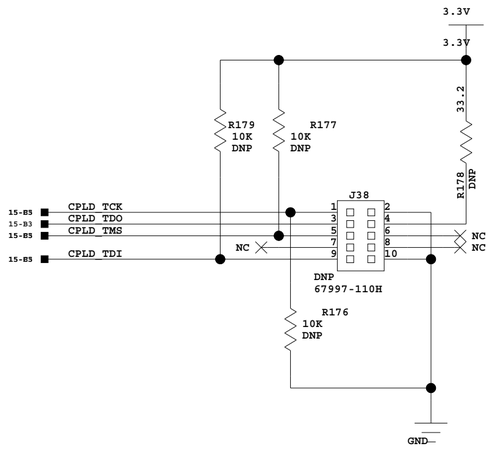

PCIARBITER/GPIO CONTROL

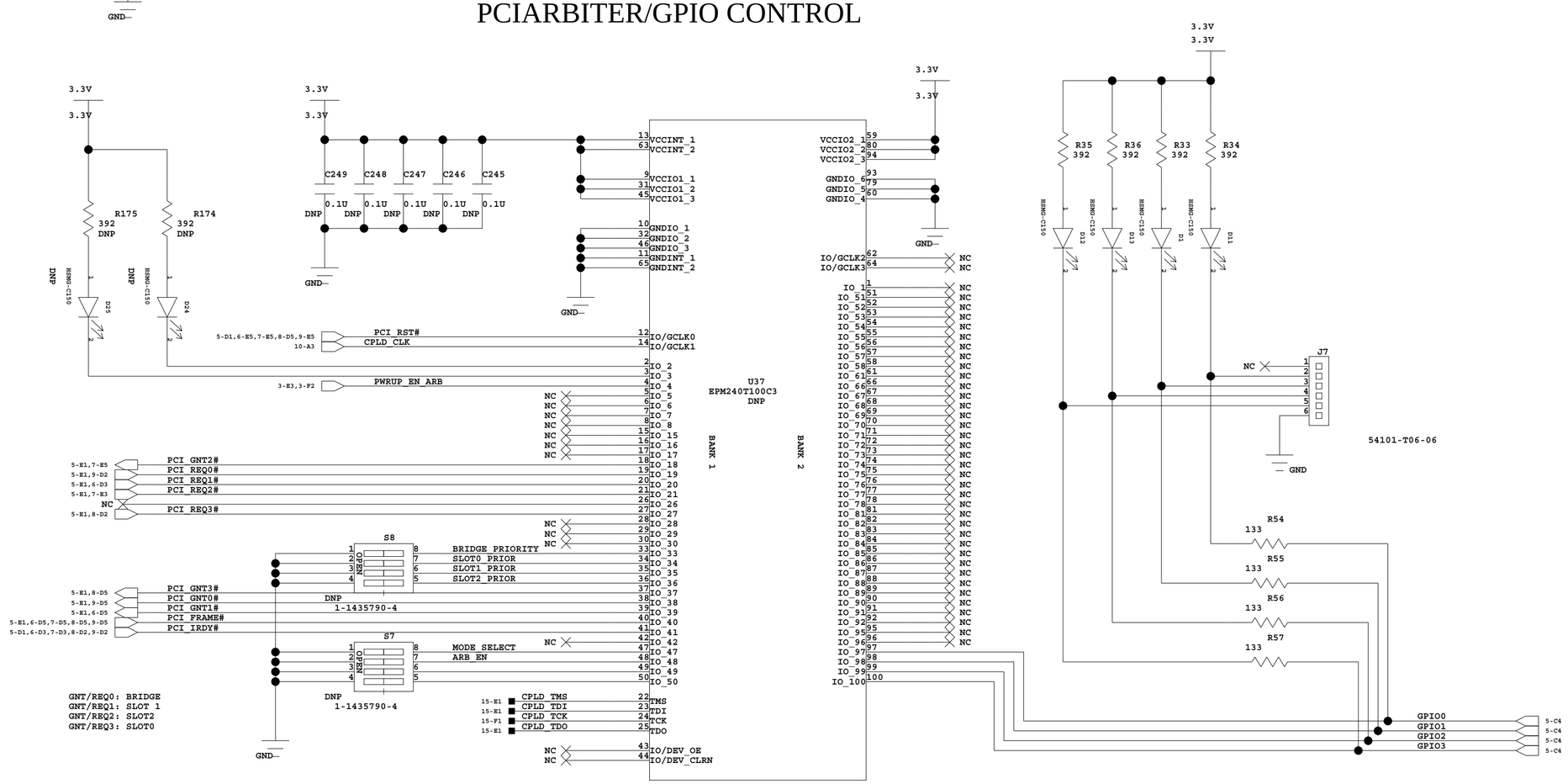

TITLE :			
TEST DEVICES CONT'D			
SIZE: C	DRAWING NUMBER : 60E2000_SC001_03	Version: 1.0	DESIGNER :
LAST MODIFIED DATE : 6-15-2007_16:00	SHEET 15 OF 15		