REVISION TABLE

REV.	DATE	ENGINEER	NOTES
00	14/03/2019	JM	Draft version.

MECHANICAL PARTS

MECHANICAL

FD1 FD2 FD3

FID100X200 FID100X200 FID100X200

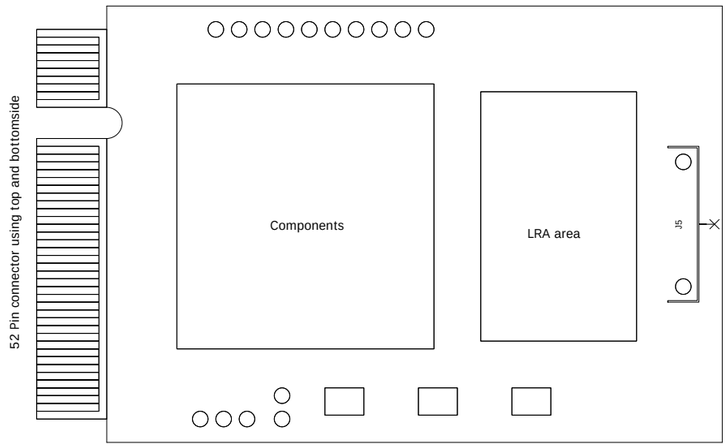

SCHEMATIC TEMPLATE REV.xDxD_V7 (01-06-2017)

DESIGNED BY: JM MG	CONFIDENTIAL INFORMATION	SIZE A3L	TITLE: DA7283 Daughter board VARIANT: Master Sch no Var defined
REVIEWED BY: JM	SAVED DATE: 17/05/2019:10:27	DRAWING No: 359-09-A 1 (BOARD No. / Sch Rev / Variant No. / Var Rev)	dialog SEMICONDUCTOR
	REVIEWED DATE: 14/03/2019	SHEET NAME: REVISION	PAGE: 2 of 2

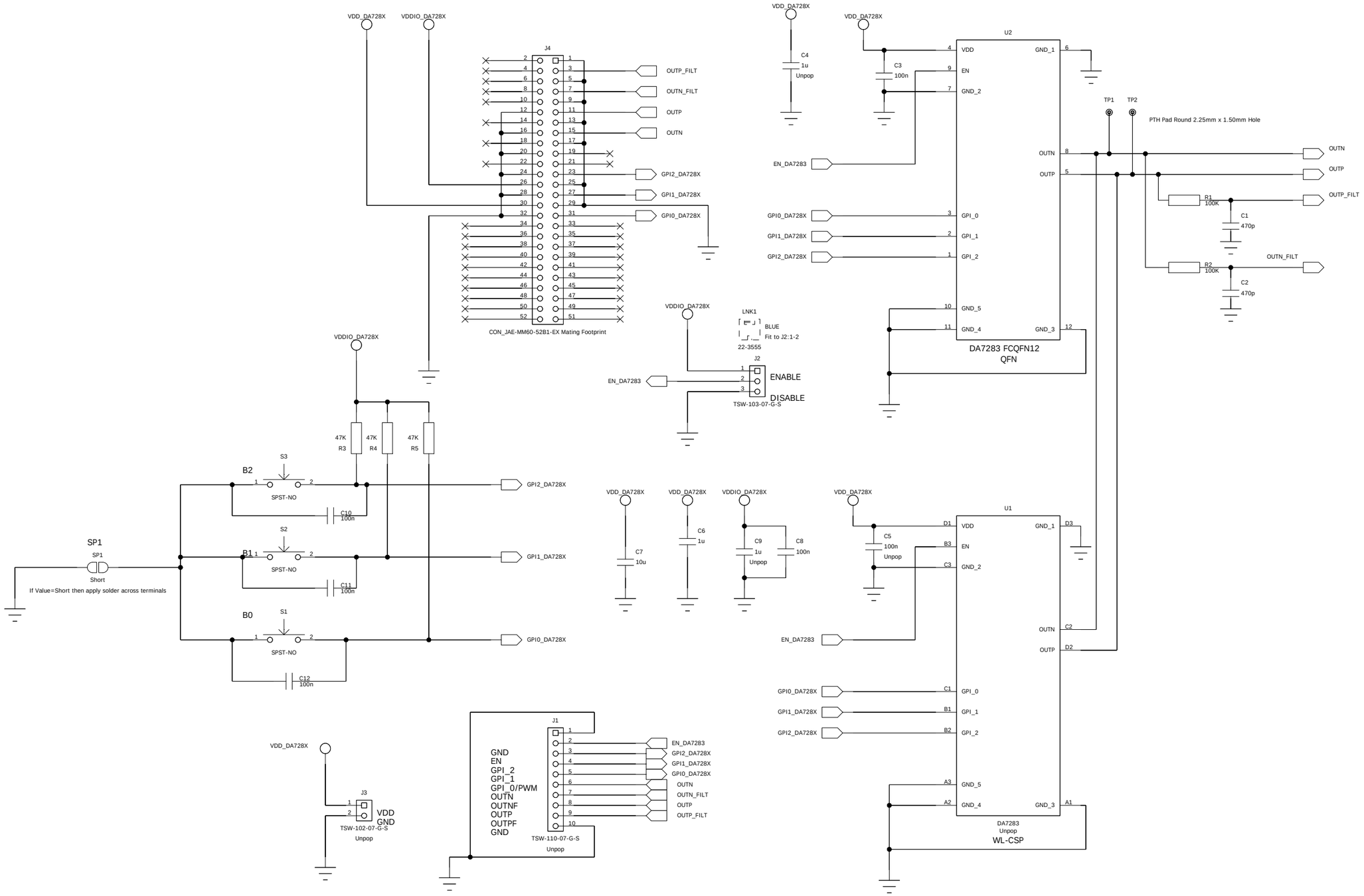
VDD_DA728X
VDDIO_DA728X
J4
OUTP_FILT
OUTN_FILT
OUTP
OUTN
GPI2_DA728X
GPI1_DA728X
GPI0_DA728X
CON_JAE-MM60-52B1-EX Mating Footprint
U2
VDD
EN
GND_2
GND_1
OUTN
OUTP
GPI_0
GPI_1
GPI_2
GND_5
GND_4
GND_3
DA7283 FCQFN12
QFN
C4
1u
Unpop
C3
100n
EN_DA7283
TP1
TP2
PTH Pad Round 2.25mm x 1.50mm Hole
R1
100K
C1
470p
R2
100K
C2
470p
LNK1
BLUE
Fit to J2:1-2
22-3555
J2
ENABLE
DISABLE
TSW-103-07-G-S
47K
R3
R4
R5
S3
B2
SPST-NO
C10
100n
S2
B1
C11
100n
S1
B0
C12
100n
SP1
Short
If Value=Short then apply solder across terminals
C7
10u
C6
1u
C9
1u
Unpop
C8
100n
C5
100n
Unpop
U1
D1
B3
C3
D3
C2
D2
C1
B1
B2
A3
A2
A1
DA7283
Unpop
WL-CSP
J3
VDD
GND
TSW-102-07-G-S
Unpop
J1
GND
EN
GPI_2
GPI_1
GPI_0/PWM
OUTN
OUTNF
OUTP
OUTPF
GND
TSW-110-07-G-S
Unpop