REVISIONS				
DCN	REV	DESCRIPTION	DATE	CHANGE BY
PCB-0180R01	1.0	INITIAL RELEASE	2009-01-20	T. TRAN

1. TITLE PAGE / TABLE OF CONTENTS
2. MEZZANINE CONNECTOR PORTS 0,1
3. MEZZANINE CONNECTOR PORTS 2,3
4. MEZZANINE CONNECTOR PORTS 4,5
5. MEZZANINE CONNECTOR PORTS 6,7
6. MEZZANINE CONNECTOR PORTS 8,9
7. MEZZANINE CONNECTOR PORTS 10,11
8. MEZZANINE CONNECTOR PORTS 12,13
9. MEZZANINE CONNECTOR PORTS 14,15
10. PORT RESET SELECT HEADERS
11. PORT RESET SELECT HEADERS
12. 89PES64H16 - SERDES
13. 89PES64H16 - CLK, CONFIG, GPIO
14. 89PES64H16 - POWER
15. 89PES64H16 - GND
16. IOEXPANDER 0-3
17. IOEXPANDER 4-7
18. IOEXPANDER 8-11
19. IOEXPANDER 12-13
20. HOT PLUG CONTROL PORTS 0-3
21. HOT PLUG CONTROL PORTS 4-7
22. HOT PLUG CONTROL PORTS 8-11
23. HOT PLUG CONTROL PORTS 12-15
24. HOT PLUG - MOSFETS PORTS 0-2
25. HOT PLUG - MOSFETS PORTS 3-5
26. HOT PLUG - MOSFETS PORTS 6-8
27. HOT PLUG - MOSFETS PORTS 9-11
28. HOT PLUG - MOSFETS PORTS 11-14
29. HOT PLUG - MOSFETS PORTS 15
30. CLOCKS
31. CLOCK BUFFER - 1
32. CLOCK BUFFER - 2
33. CLOCK SELECTOR - DUT PCLK 0-6
34. CLOCK SELECTOR - DUT PCLK 7-12
35. CLOCK SELECTOR - DUT PCLK 13-15, GCLK 1-2
36. CLOCK SELECTOR - SLOTS 0-7
37. CLOCK SELECTOR - SLOTS 8-15
38. POWER CONNECTORS
39. POWER REGULATOR - VDDIO
40. POWER REGULATOR - VDDCORE
41. POWER REGULATOR - VDDPEA
42. POWER REGULATOR - VDDPEHA
43. POWER REGULATOR - VDDPETA
44. RESET, SMBUS, EEPROM, JTAG
45. DIP SWITCHES
46. LED - GPIO
47. LED - PORT STATUS (1 OF 4)
48. LED - PORT STATUS (2 OF 4)
49. LED - PORT STATUS (3 OF 4)
50. LED - PORT STATUS (4 OF 4)
51. MIN LOAD RESISTORS

CONFIDENTIAL PROPERTY OF INTEGRATED DEVICE TECHNOLOGY, INC.
6024 SILVER CREEK VALLEY RD. SAN JOSE, CA 95138
COPYRIGHT (C) 2009 IDT

TITLE: 89EBPES64x16AG2 - 89HPES64x16AG2 Eval. Board			
SIZE: B	DRAWING NO.: SCH-00184	FAB P/N: 18-689-000	REV.: 1.0
AUTHOR: T. Tran		CHECKED BY: D. Huang	
Wed Jan 28 11:23:16 2009		SHEET 1 OF 51	

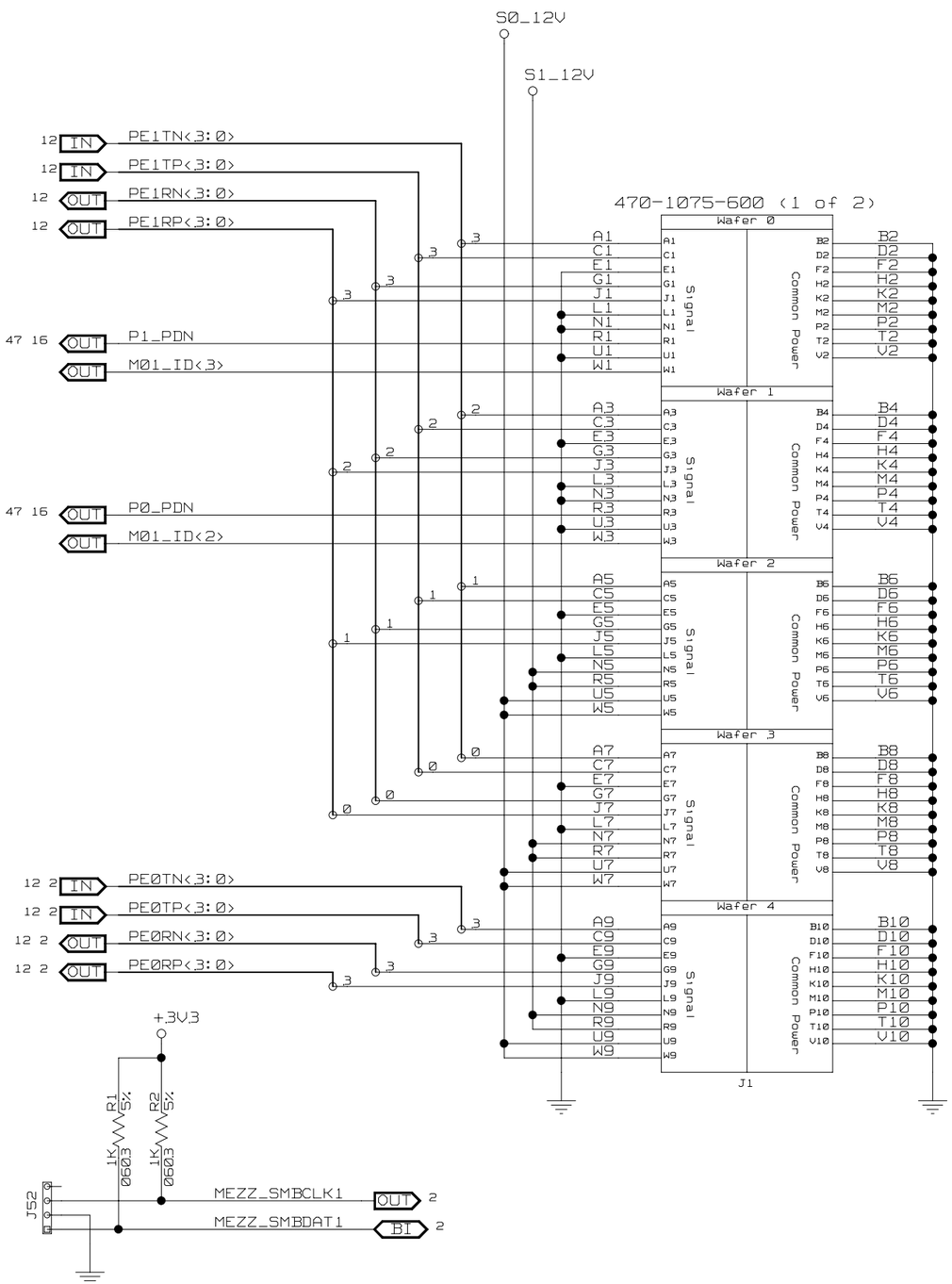

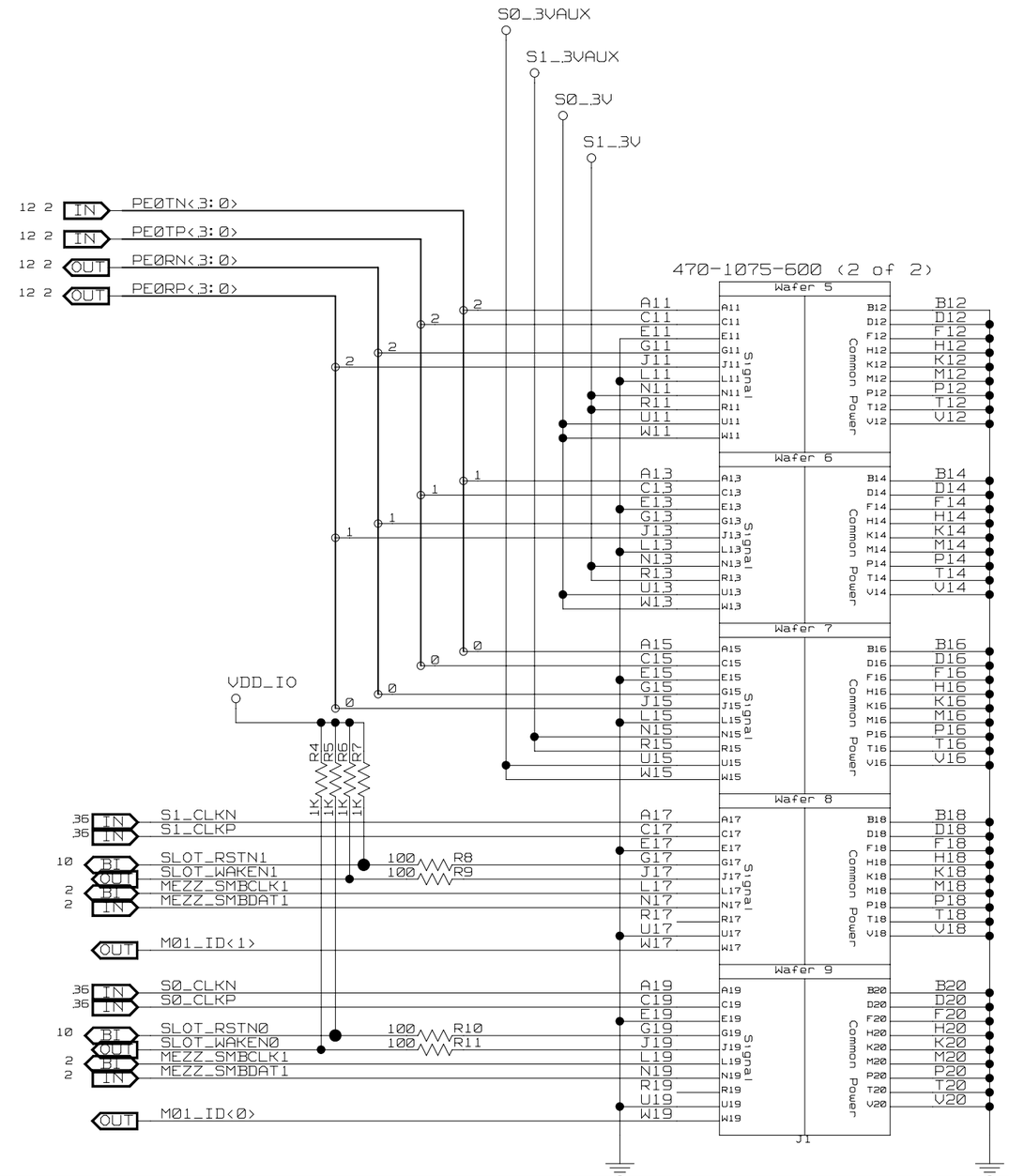

CONFIDENTIAL PROPERTY OF INTEGRATED DEVICE TECHNOLOGY, INC.
6024 SILVER CREEK VALLEY ROAD. SAN JOSE, CA 95138
COPYRIGHT (C)2009 IDT

TITLE 89EBPES64x16AG2 - 89HPES64x16AG2 Eval. Board			
MEZZANINE CONNECTOR PORTS 0/1			
SIZE B	DRAWING NO. SCH-00184	FAB P/N 18-689-000	REV. 1.0
AUTHOR T. Tran		CHECKED BY D. Huang	
Thu Jan 29 15:53:35 2009			SHEET 2 OF 51

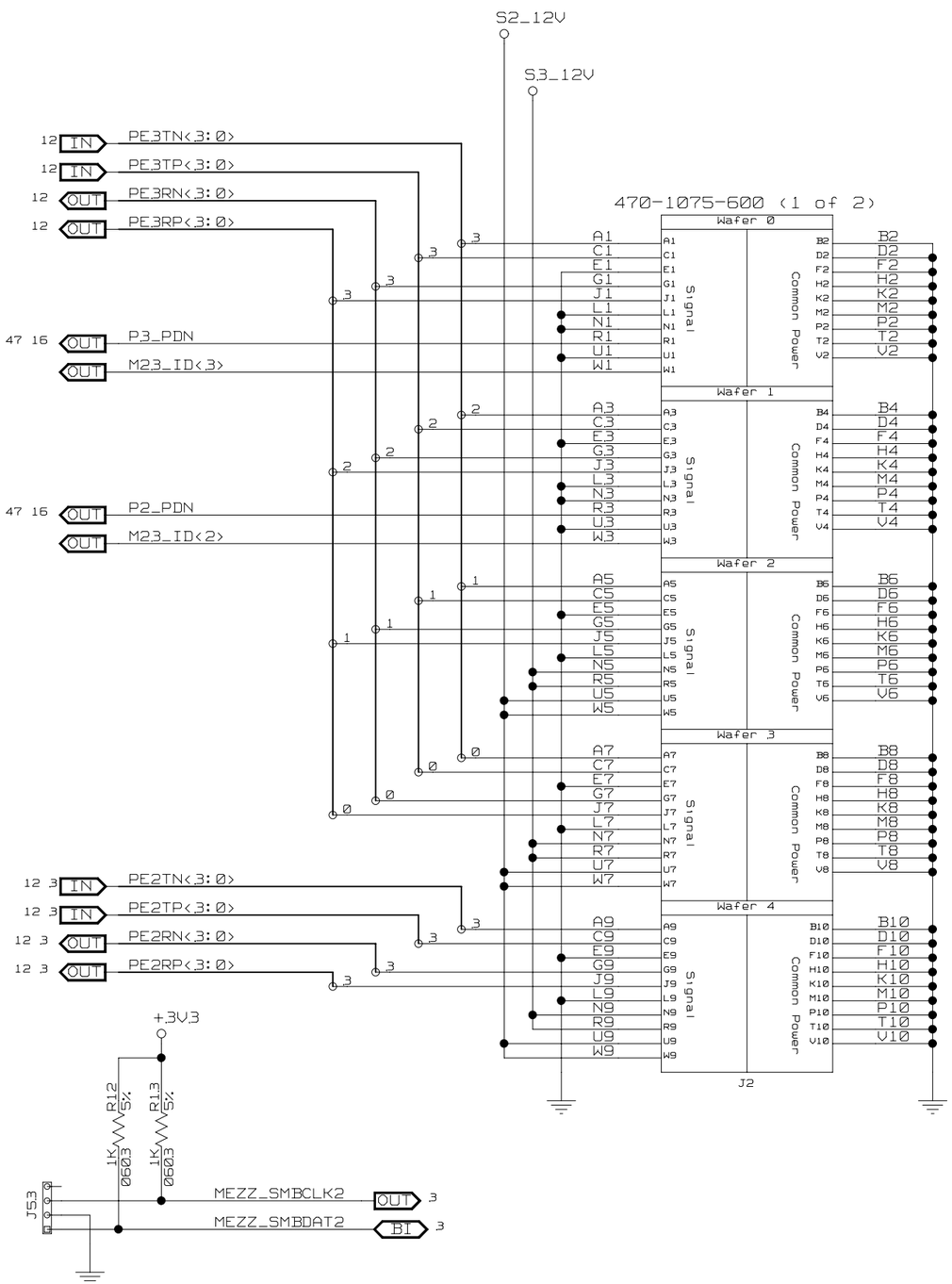

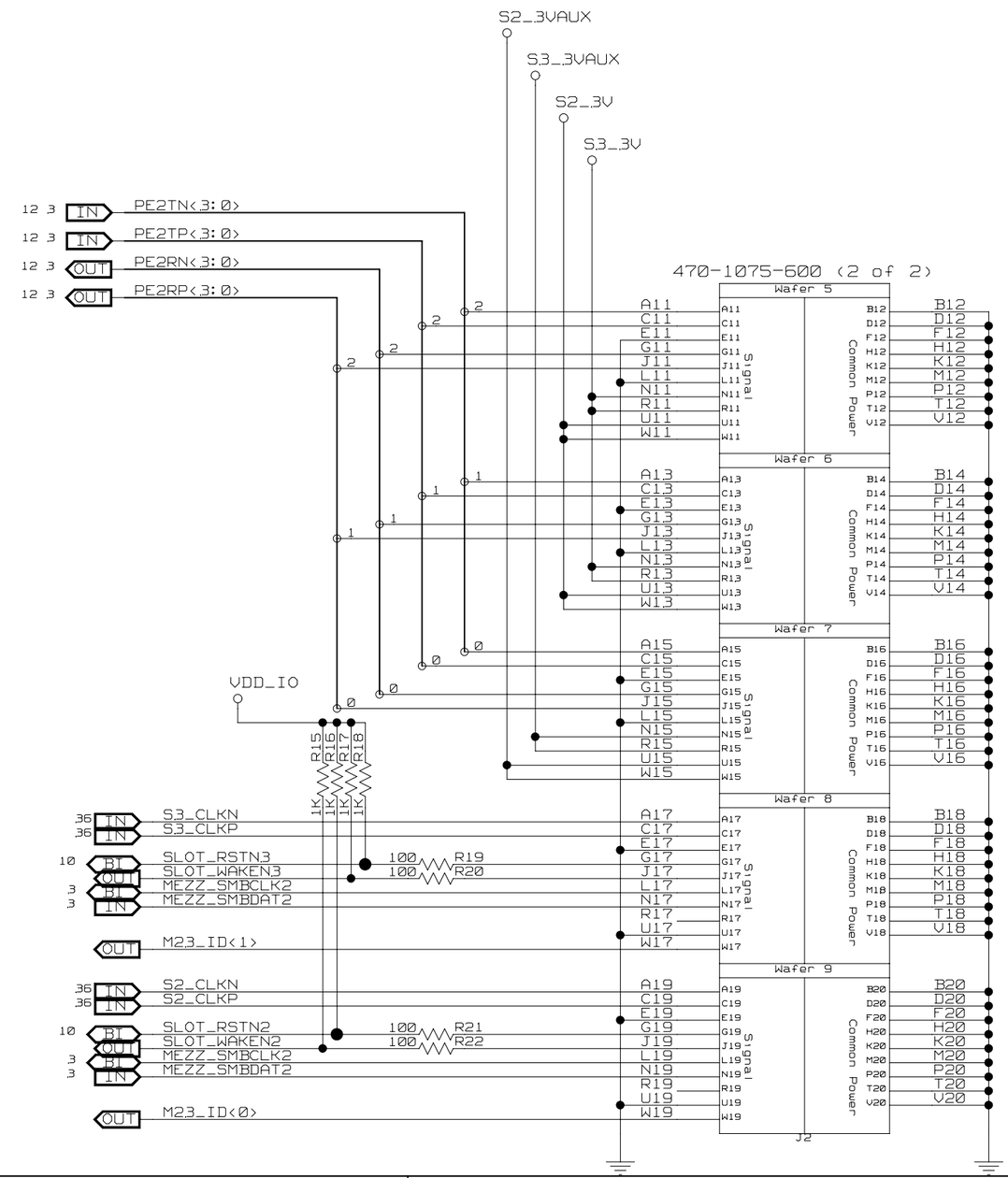

CONFIDENTIAL PROPERTY OF INTEGRATED DEVICE TECHNOLOGY, INC.
6024 SILVER CREEK VALLEY ROAD. SAN JOSE, CA 95138
COPYRIGHT (C)2009 IDT

TITLE 89EBPES64x16AG2 - 89HPES64x16AG2 Eval. Board			
MEZZANINE CONNECTOR PORTS 2/3			
SIZE B	DRAWING NO. SCH-00184	FAB P/N 18-689-000	REV. 1.0
AUTHOR T. Tran		CHECKED BY D. Huang	
Thu Jan 29 15:53:36 2009		SHEET 3 OF 51	

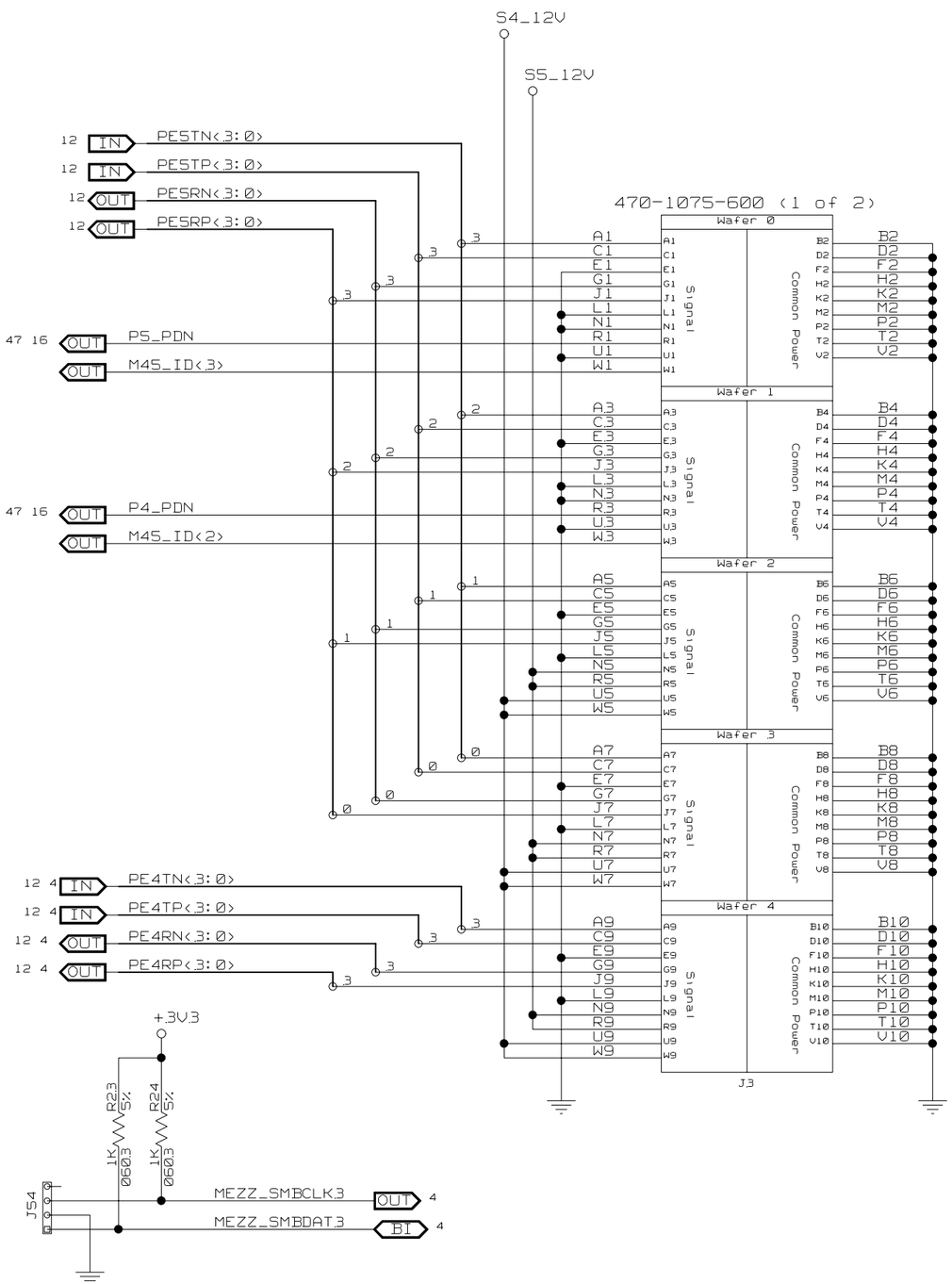

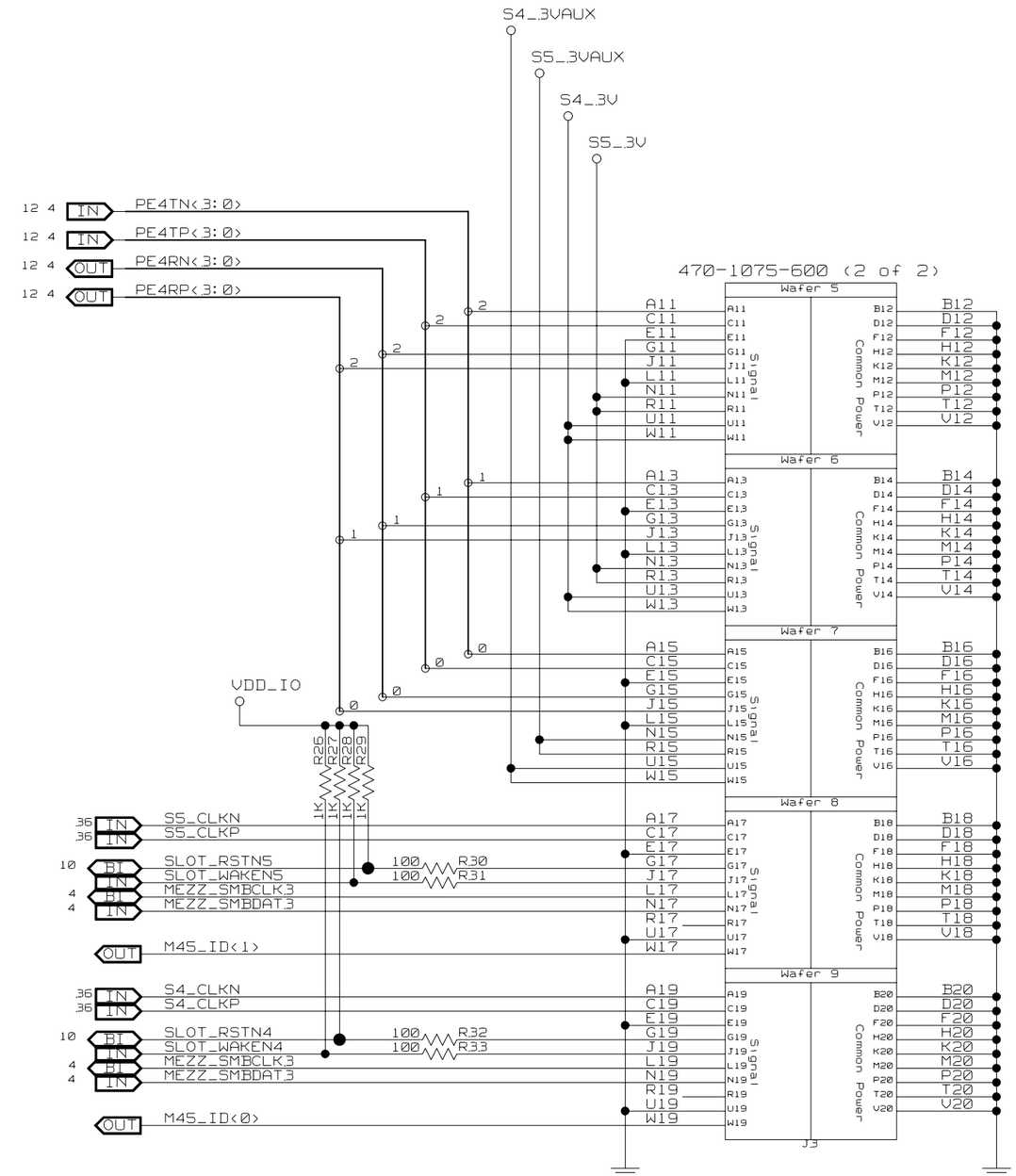

CONFIDENTIAL PROPERTY OF INTEGRATED DEVICE TECHNOLOGY, INC.
6024 SILVER CREEK VALLEY ROAD. SAN JOSE, CA 95138
COPYRIGHT (C)2009 IDT

TITLE 89EBPES64x16AG2 - 89HPES64x16AG2 Eval. Board

MEZZANINE CONNECTOR PORTS 4/5

SIZE	DRAWING NO.	FAB P/N	REV.
B	SCH-00184	18-689-000	1.0

AUTHOR	CHECKED BY
T. Tran	D. Huang

Thu Jan 29 15:53:37 2009

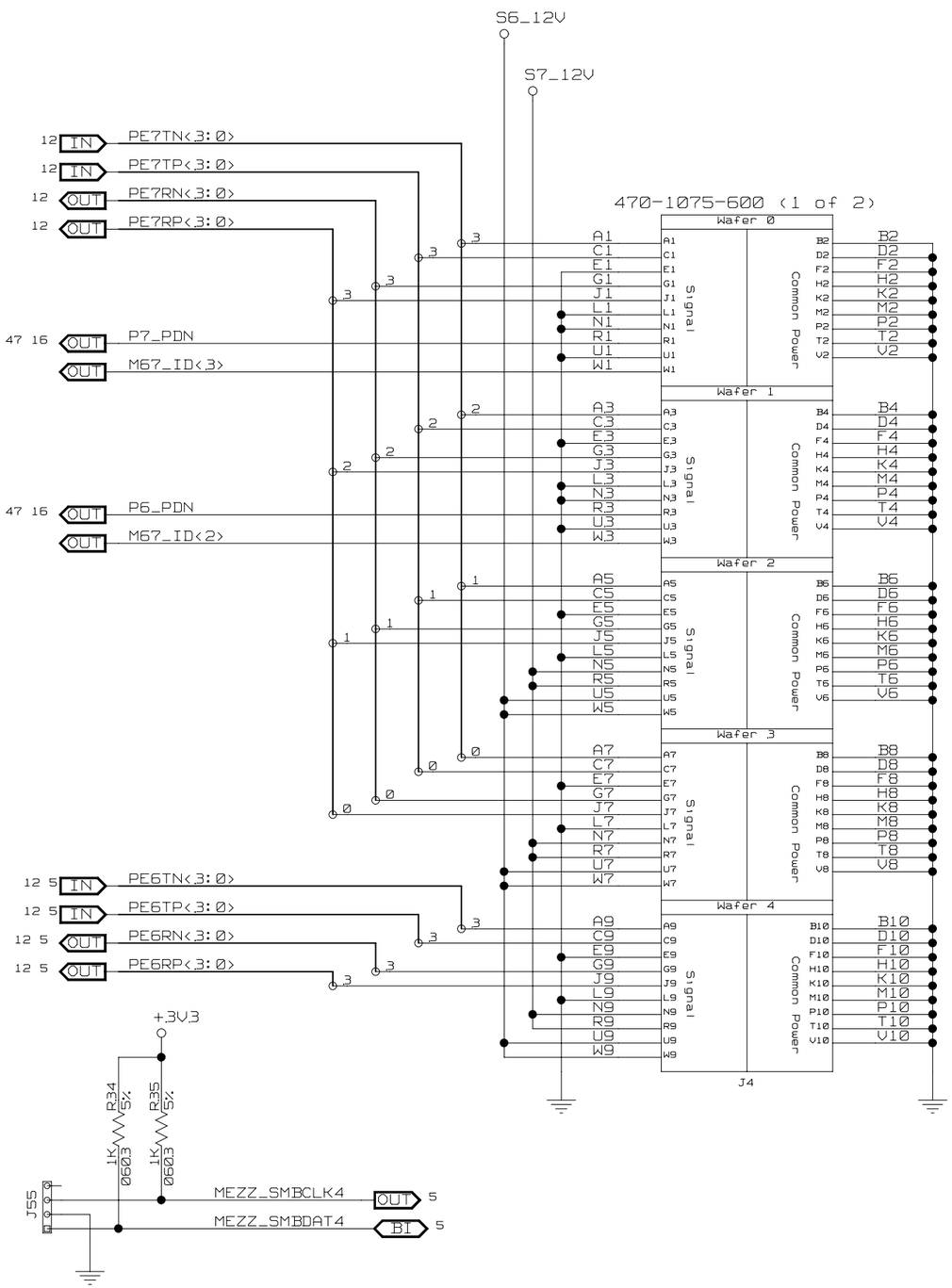

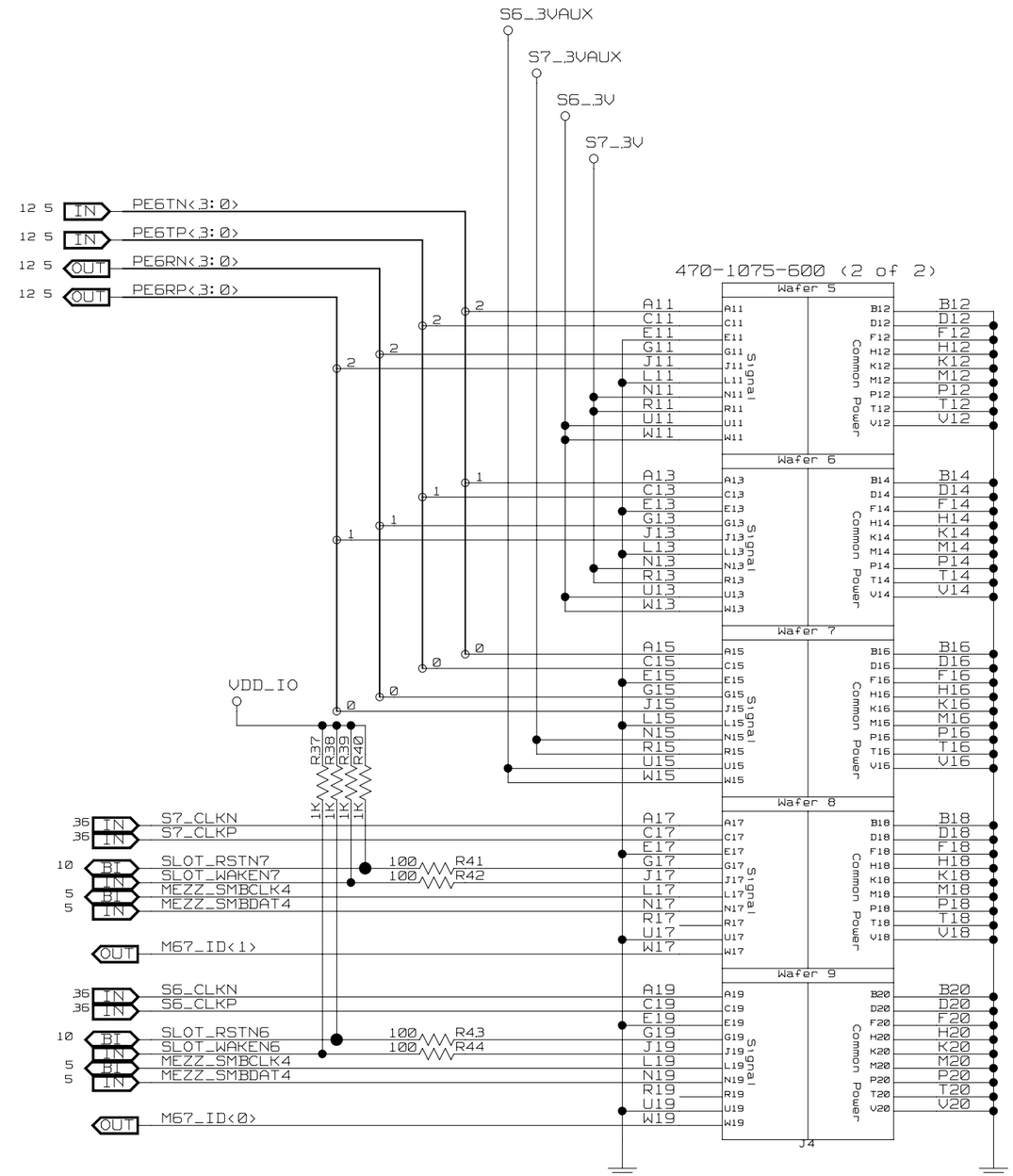

CONFIDENTIAL PROPERTY OF INTEGRATED DEVICE TECHNOLOGY, INC.
6024 SILVER CREEK VALLEY ROAD. SAN JOSE, CA 95138
COPYRIGHT (C)2009 IDT

TITLE 89EBPES64x16AG2 - 89HPES64x16AG2 Eval. Board

MEZZANINE CONNECTOR PORTS 6/7

SIZE	DRAWING NO.	FAB P/N	REV.
B	SCH-00184	18-689-000	1.0

AUTHOR	CHECKED BY
T. Tran	D. Huang

Thu Jan 29 15:53:38 2009

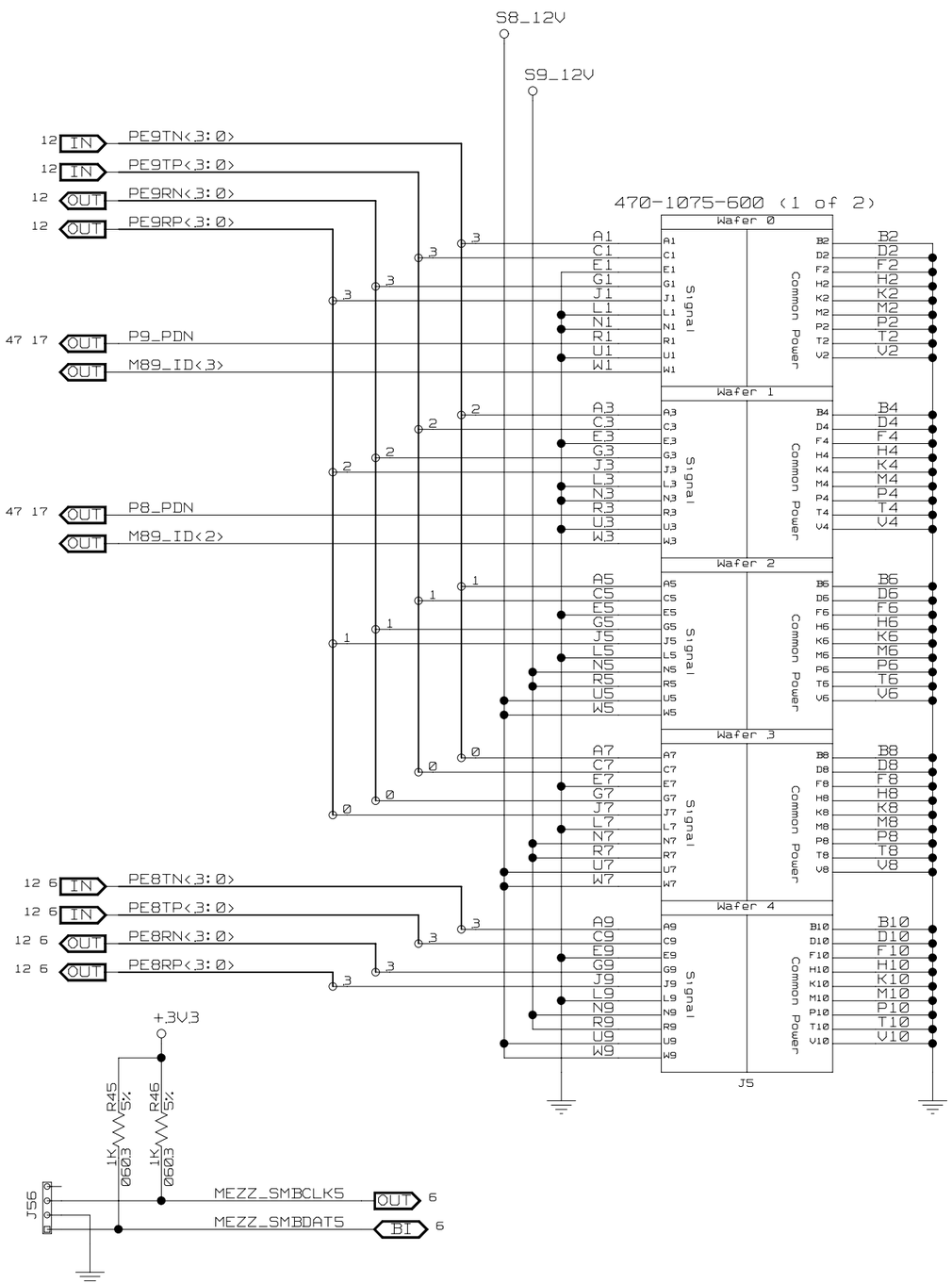

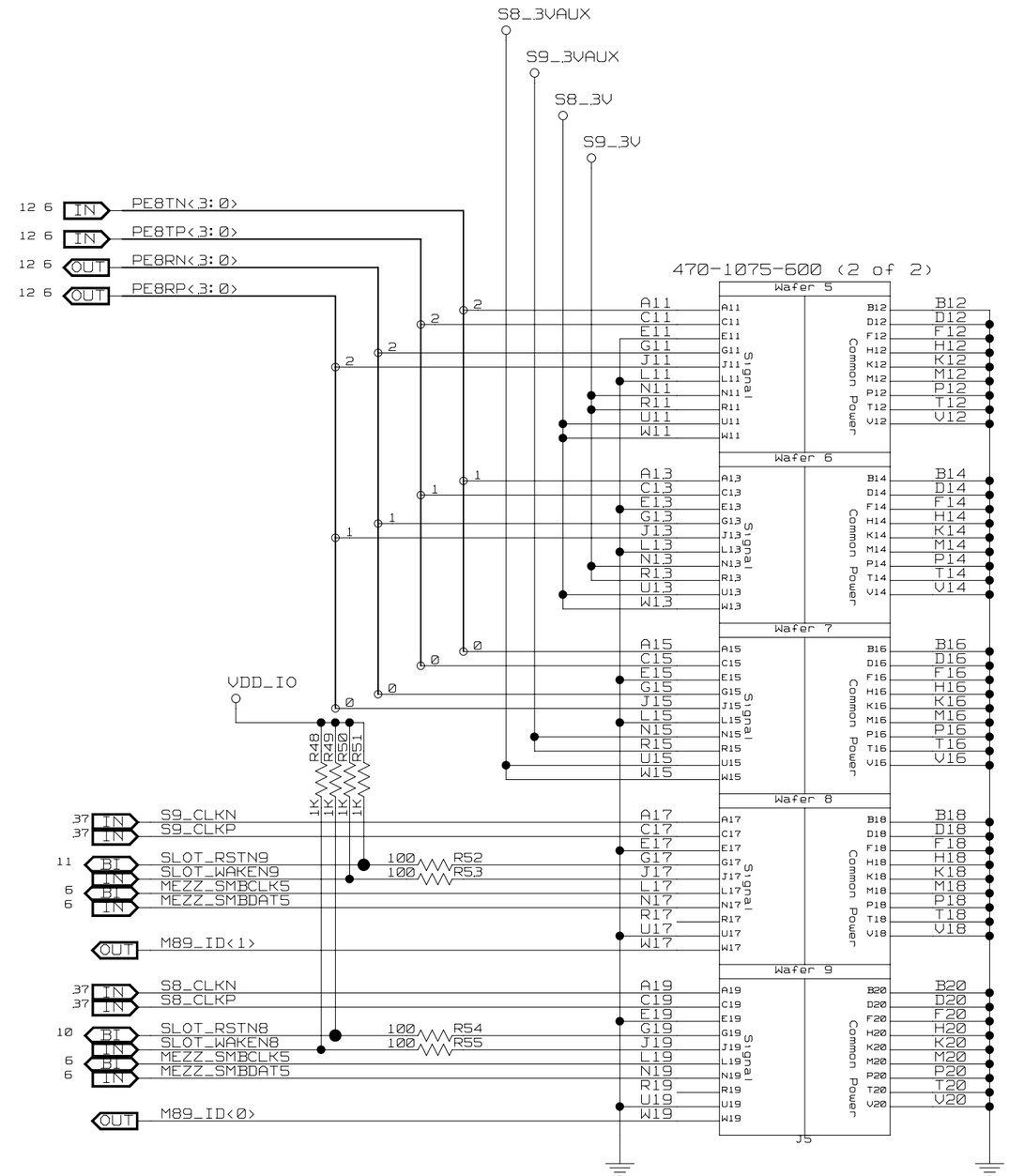

CONFIDENTIAL PROPERTY OF INTEGRATED DEVICE TECHNOLOGY, INC.
6024 SILVER CREEK VALLEY ROAD. SAN JOSE, CA 95138
COPYRIGHT (C)2009 IDT

TITLE 89EBPES64x16AG2 - 89HPES64x16AG2 Eval. Board

MEZZANINE CONNECTOR PORTS 8/9

SIZE	DRAWING NO.	FAB P/N	REV.
B	SCH-00184	18-689-000	1.0

AUTHOR	CHECKED BY
T. Tran	D. Huang

Thu Jan 29 15:53:39 2009

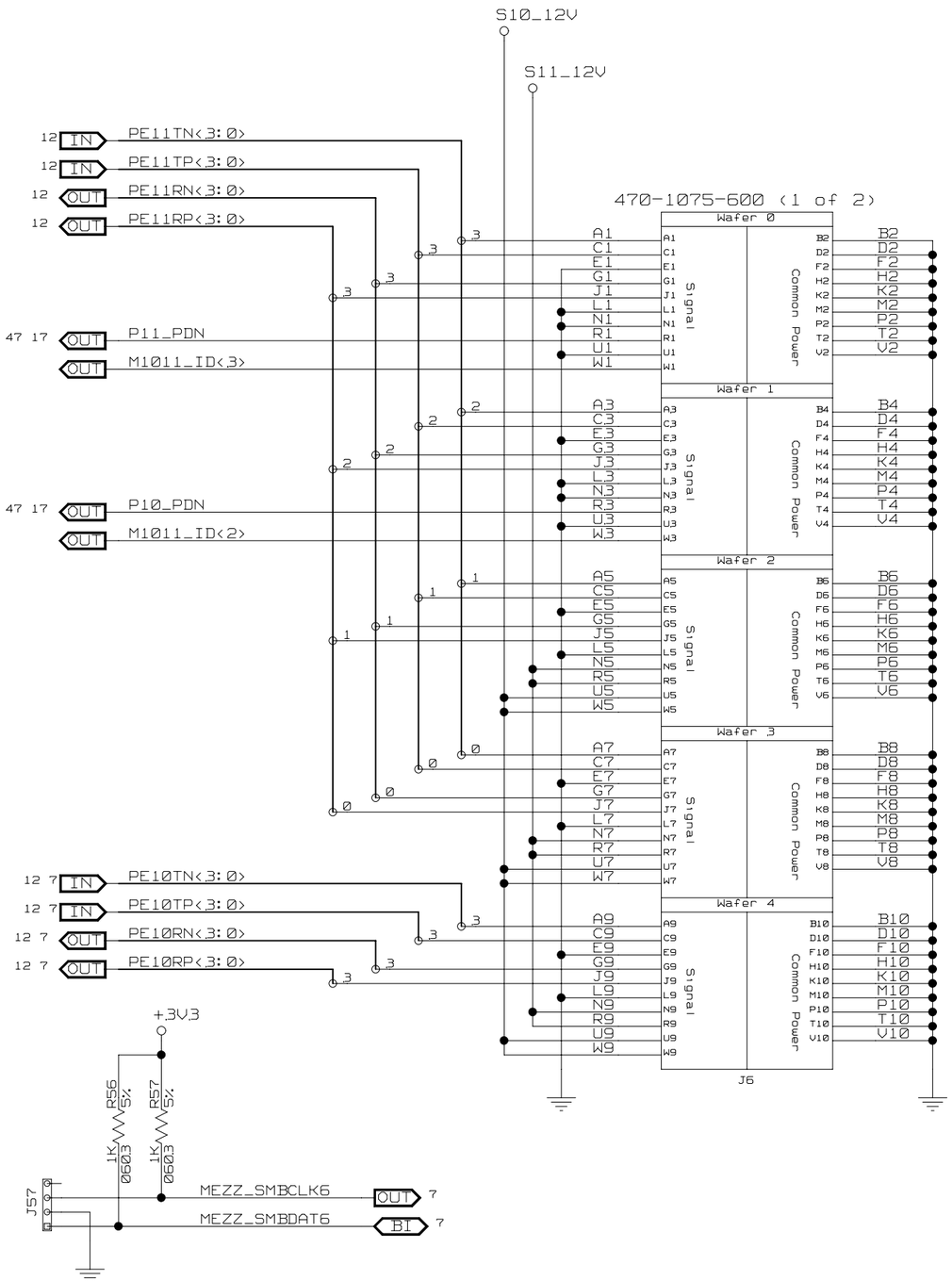

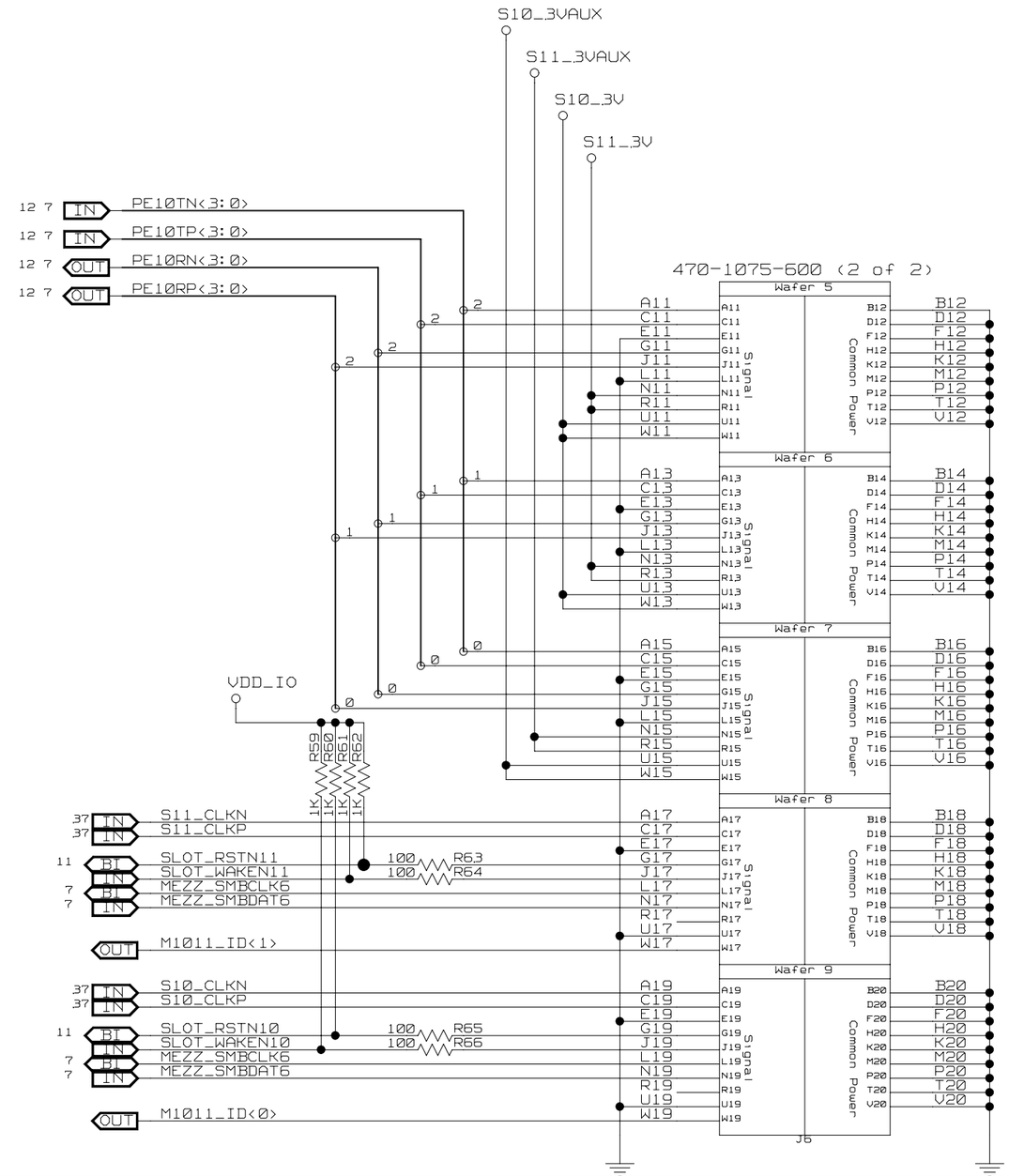

CONFIDENTIAL PROPERTY OF INTEGRATED DEVICE TECHNOLOGY, INC.
6024 SILVER CREEK VALLEY ROAD. SAN JOSE, CA 95138
COPYRIGHT (C)2009 IDT

TITLE 89EBPES64x16AG2 - 89HPES64x16AG2 Eval. Board

MEZZANINE CONNECTOR PORTS 10/11

SIZE	DRAWING NO.	FAB P/N	REV.
B	SCH-00184	18-689-000	1.0

AUTHOR	CHECKED BY
T. Tran	D. Huang

Thu Jan 29 15:53:40 2009

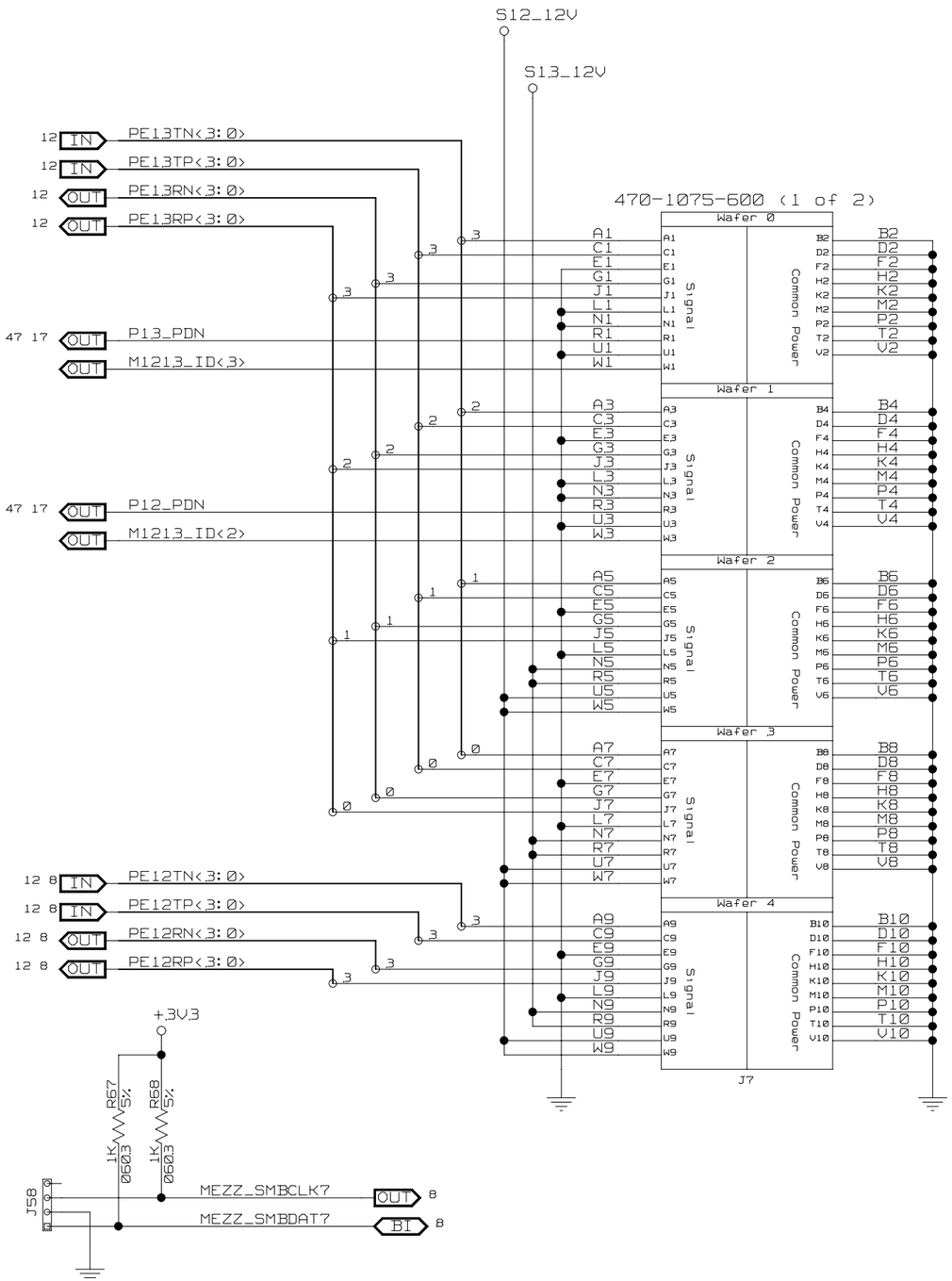

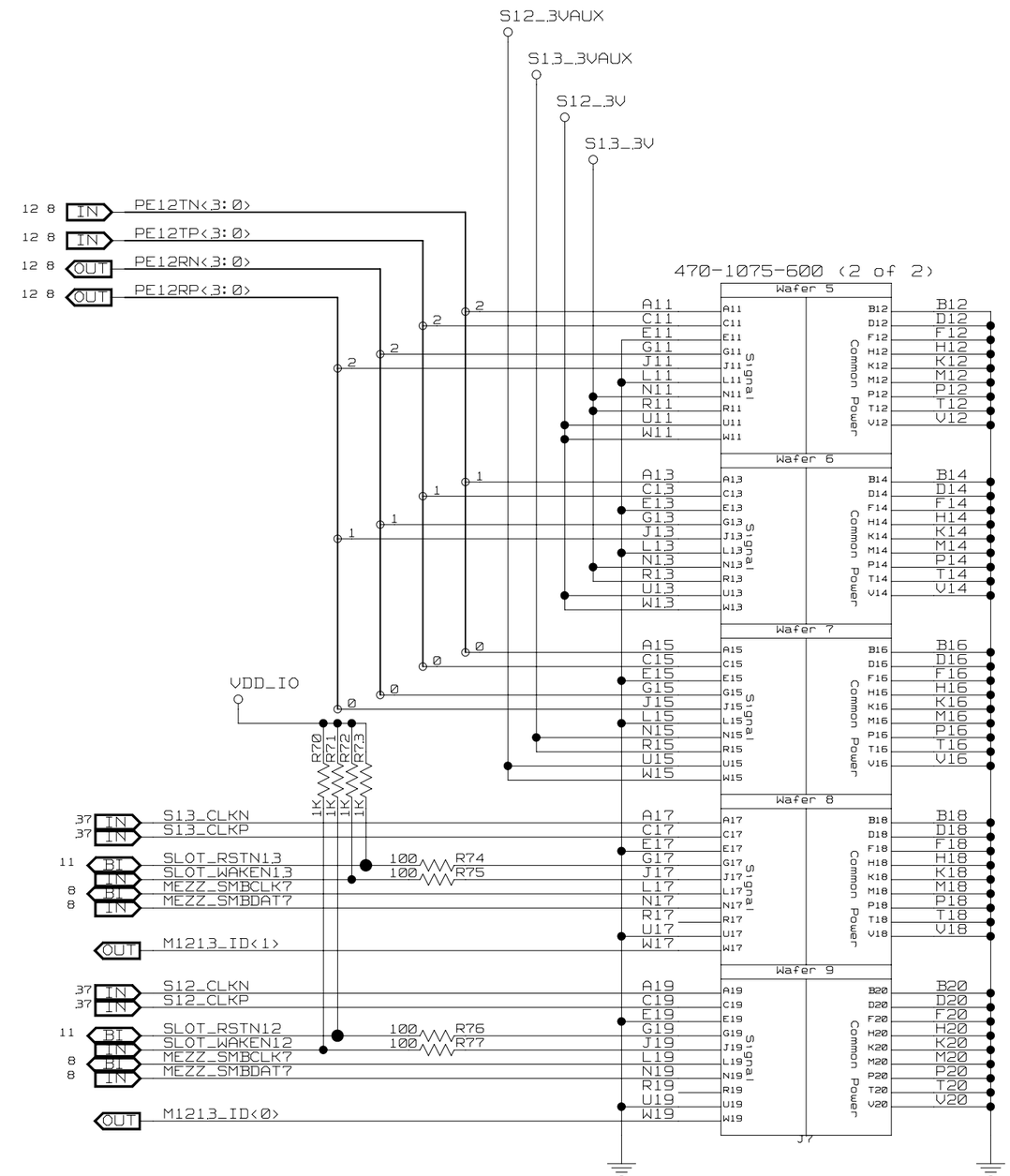

CONFIDENTIAL PROPERTY OF INTEGRATED DEVICE TECHNOLOGY, INC.
6024 SILVER CREEK VALLEY ROAD. SAN JOSE, CA 95138
COPYRIGHT (C)2009 IDT

TITLE 89EBPES64x16AG2 - 89HPES64x16AG2 Eval. Board

MEZZANINE CONNECTOR PORTS 12/13

SIZE	DRAWING NO.	FAB P/N	REV.
B	SCH-00184	18-689-000	1.0

AUTHOR	CHECKED BY
T. Tran	D. Huang

Thu Jan 29 15:53:41 2009

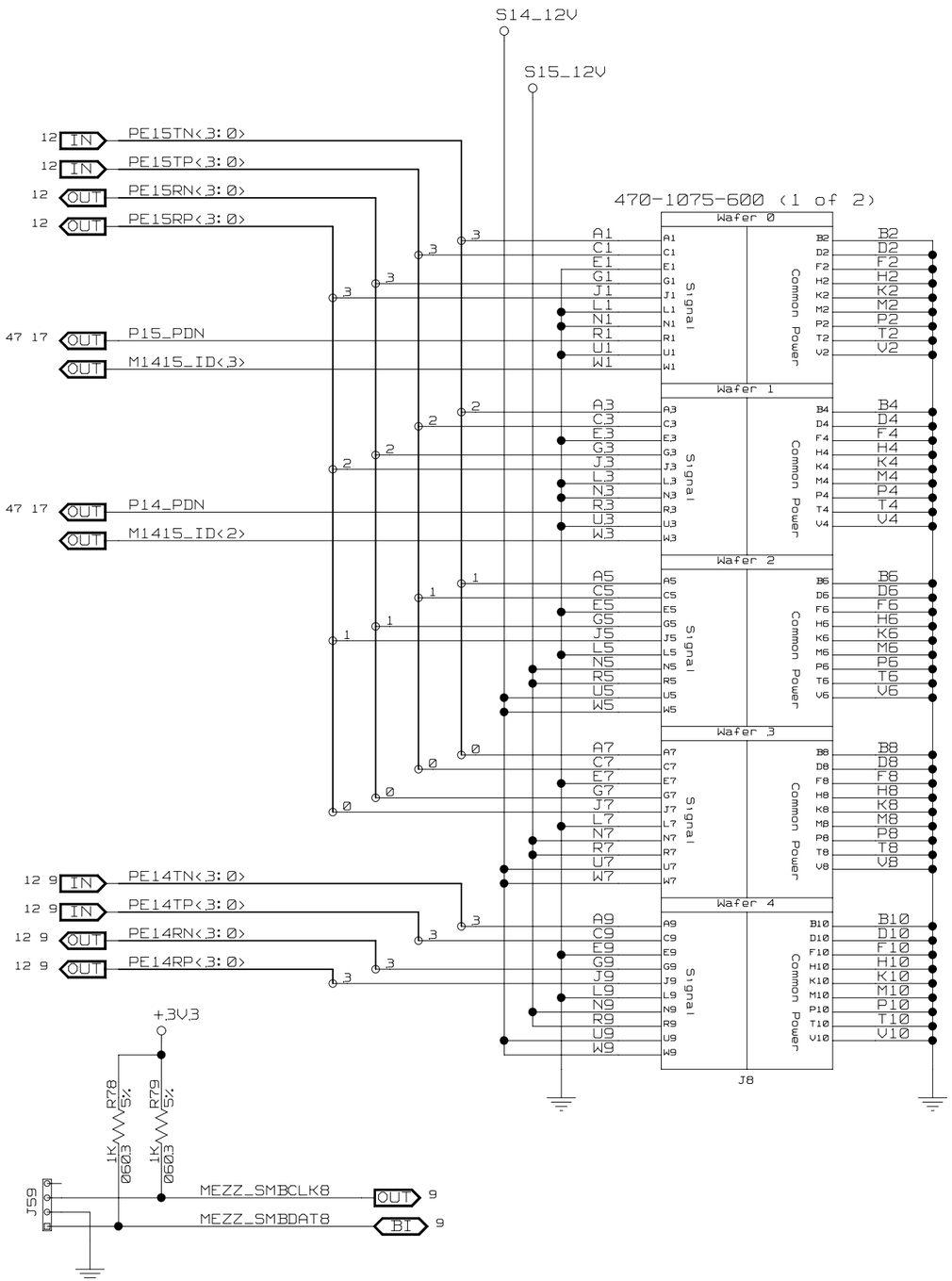

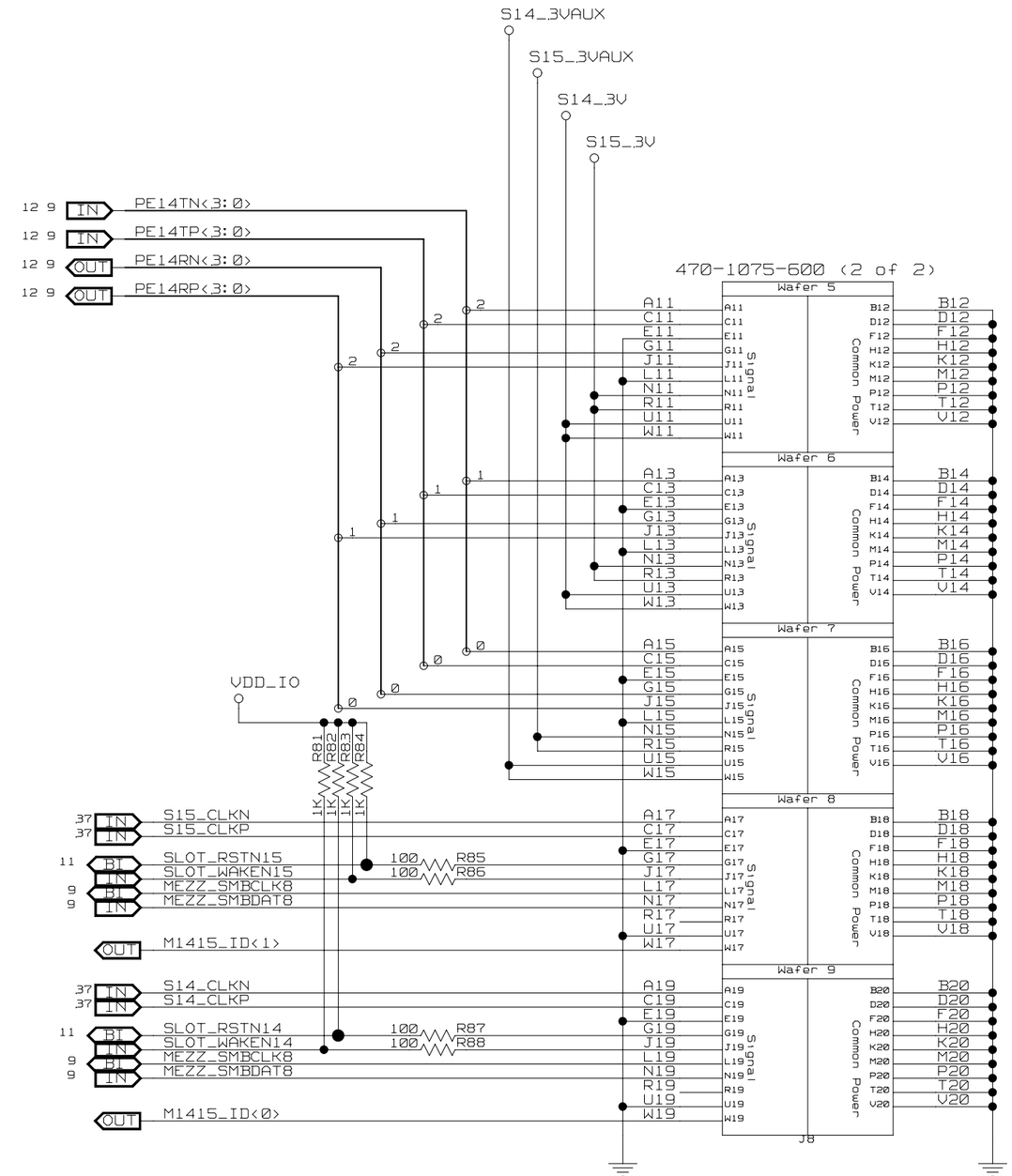

CONFIDENTIAL PROPERTY OF INTEGRATED DEVICE TECHNOLOGY, INC.
6024 SILVER CREEK VALLEY ROAD. SAN JOSE, CA 95138
COPYRIGHT (C)2009 IDT

TITLE 89EBPES64x16AG2 - 89HPES64x16AG2 Eval. Board

MEZZANINE CONNECTOR PORTS 14/15

SIZE	DRAWING NO.	FAB P/N	REV.
B	SCH-00184	18-689-000	1.0

AUTHOR	CHECKED BY
T. Tran	D. Huang

Thu Jan 29 15:53:42 2009

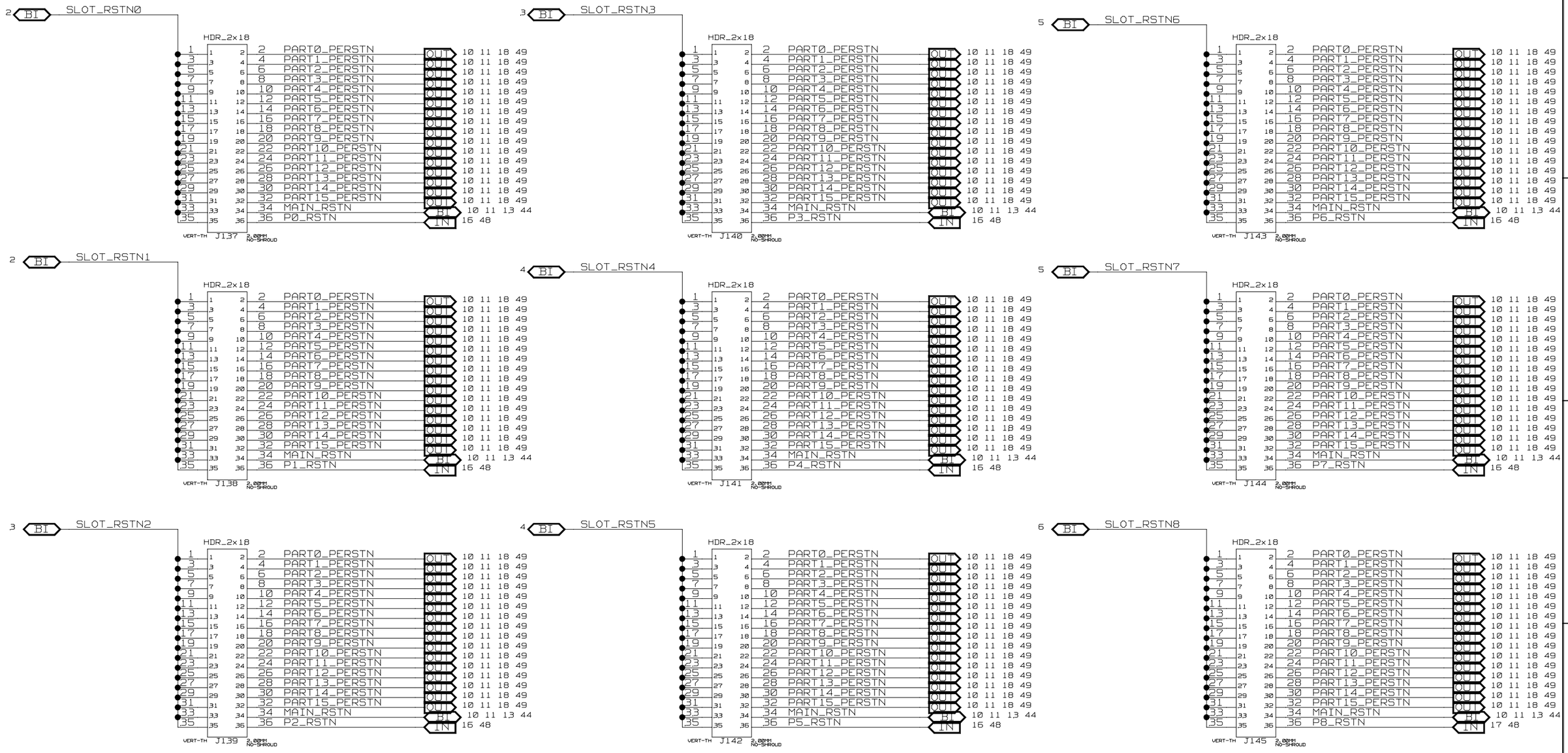

CONFIDENTIAL PROPERTY OF INTEGRATED DEVICE TECHNOLOGY, INC.
6024 SILVER CREEK VALLEY ROAD. SAN JOSE, CA 95138
COPYRIGHT (C)2009 IDT

TITLE 89EBPES64x16AG2 - 89HPES64x16AG2 Eval. Board

PORT RESET SELECT HEADERS

SIZE	DRAWING NO.	FAB P/N	REV.
B	SCH-00184	18-689-000	1.0

AUTHOR	CHECKED BY
T. Tran	D. Huang

Thu Jan 29 15:54:13 2009 SHEET 10 OF 51

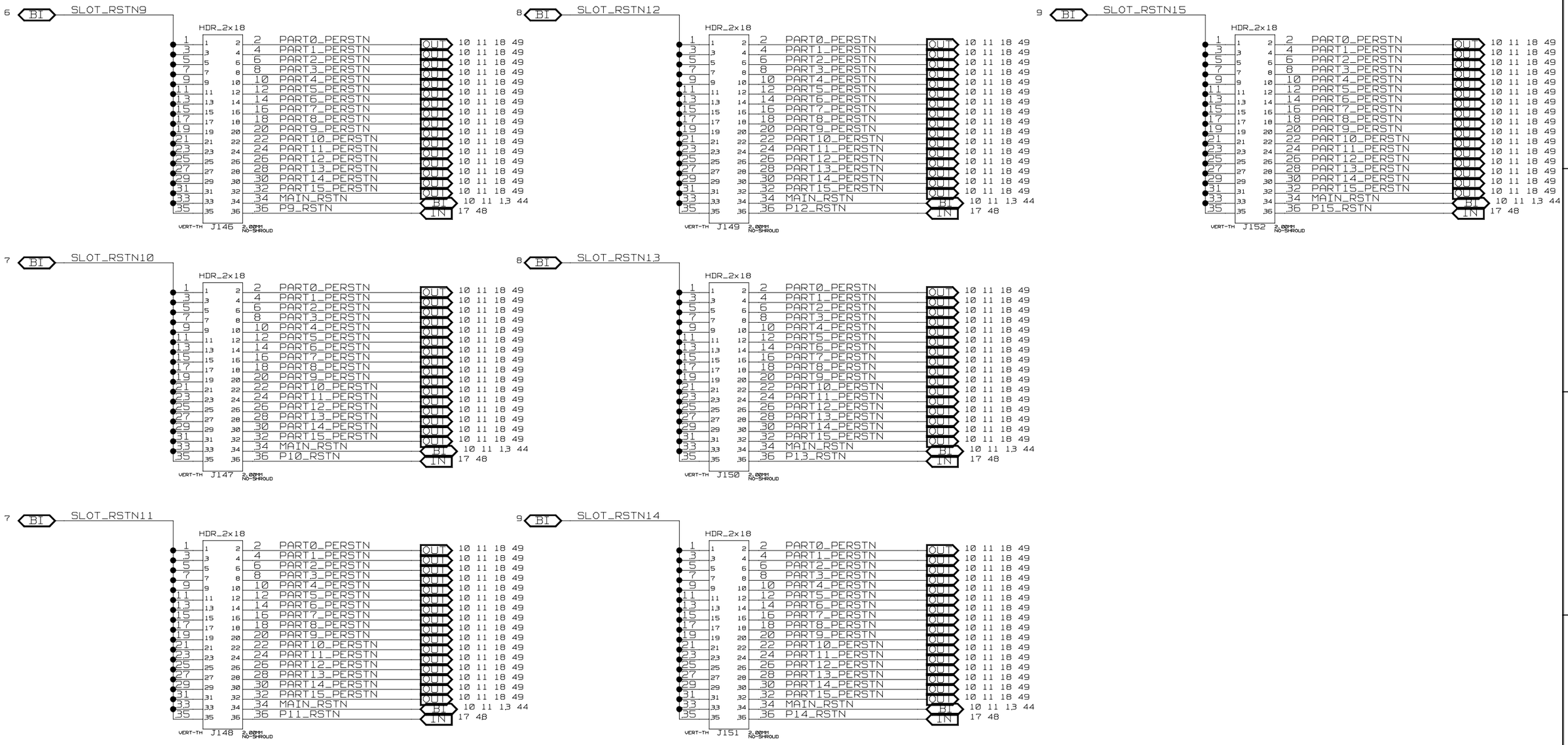

CONFIDENTIAL PROPERTY OF INTEGRATED DEVICE TECHNOLOGY, INC.
6024 SILVER CREEK VALLEY ROAD. SAN JOSE, CA 95138
COPYRIGHT (C)2009 IDT

TITLE 89EBPES64x16AG2 - 89HPES64x16AG2 Eval. Board

PORT RESET SELECT HEADERS

SIZE	DRAWING NO.	FAB P/N	REV.
B	SCH-00184	18-689-000	1.0

AUTHOR	CHECKED BY
T. Tran	D. Huang

Thu Jan 29 15:54:14 2009

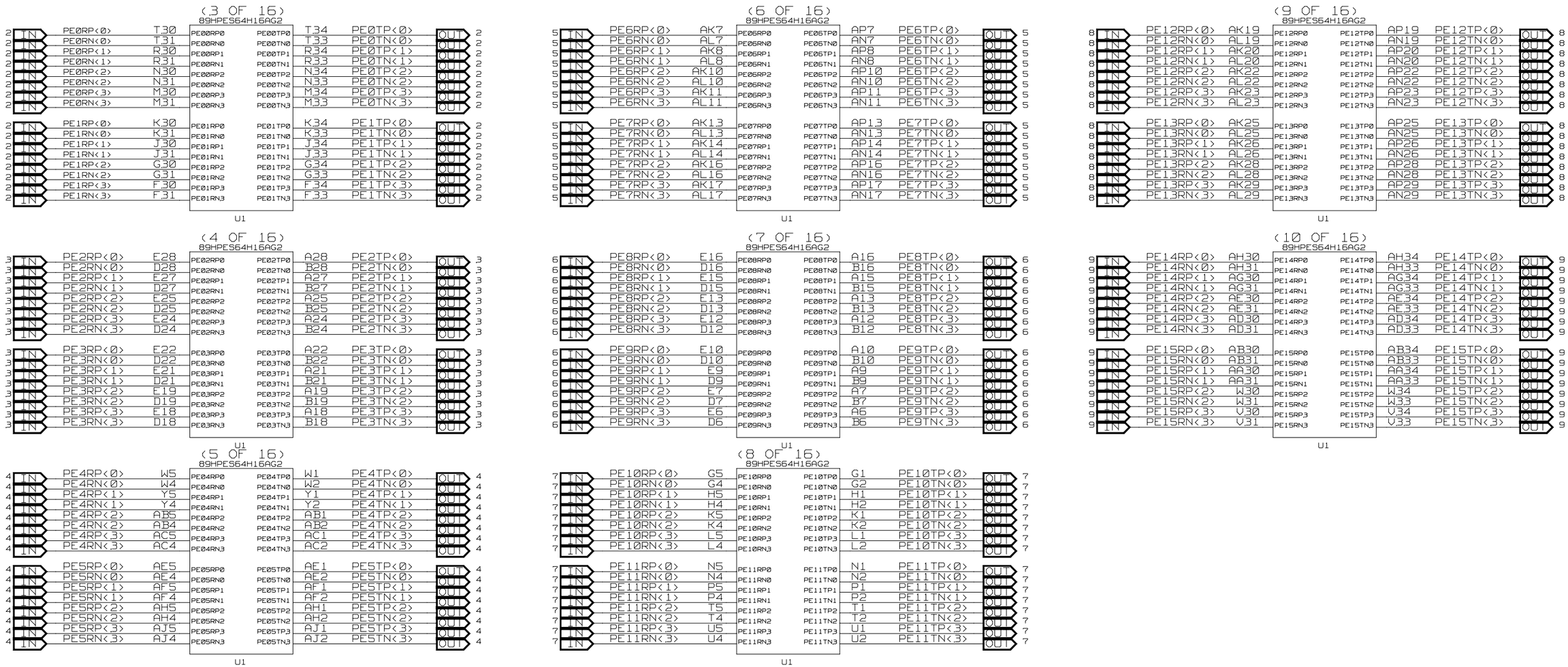

CONFIDENTIAL PROPERTY OF INTEGRATED DEVICE TECHNOLOGY, INC.
6024 SILVER CREEK VALLEY ROAD. SAN JOSE, CA 95138
COPYRIGHT (C)2009 IDT

TITLE 89EBPES64x16AG2 - 89HPES64x16AG2 Eval. Board

89PES64H16G2 - SERDES

SIZE	DRAWING NO.	FAB P/N	REV.
B	SCH-00184	18-689-000	1.0

AUTHOR	CHECKED BY
T. Tran	D. Huang

Thu Jan 29 15:53:43 2009 SHEET 12 OF 51

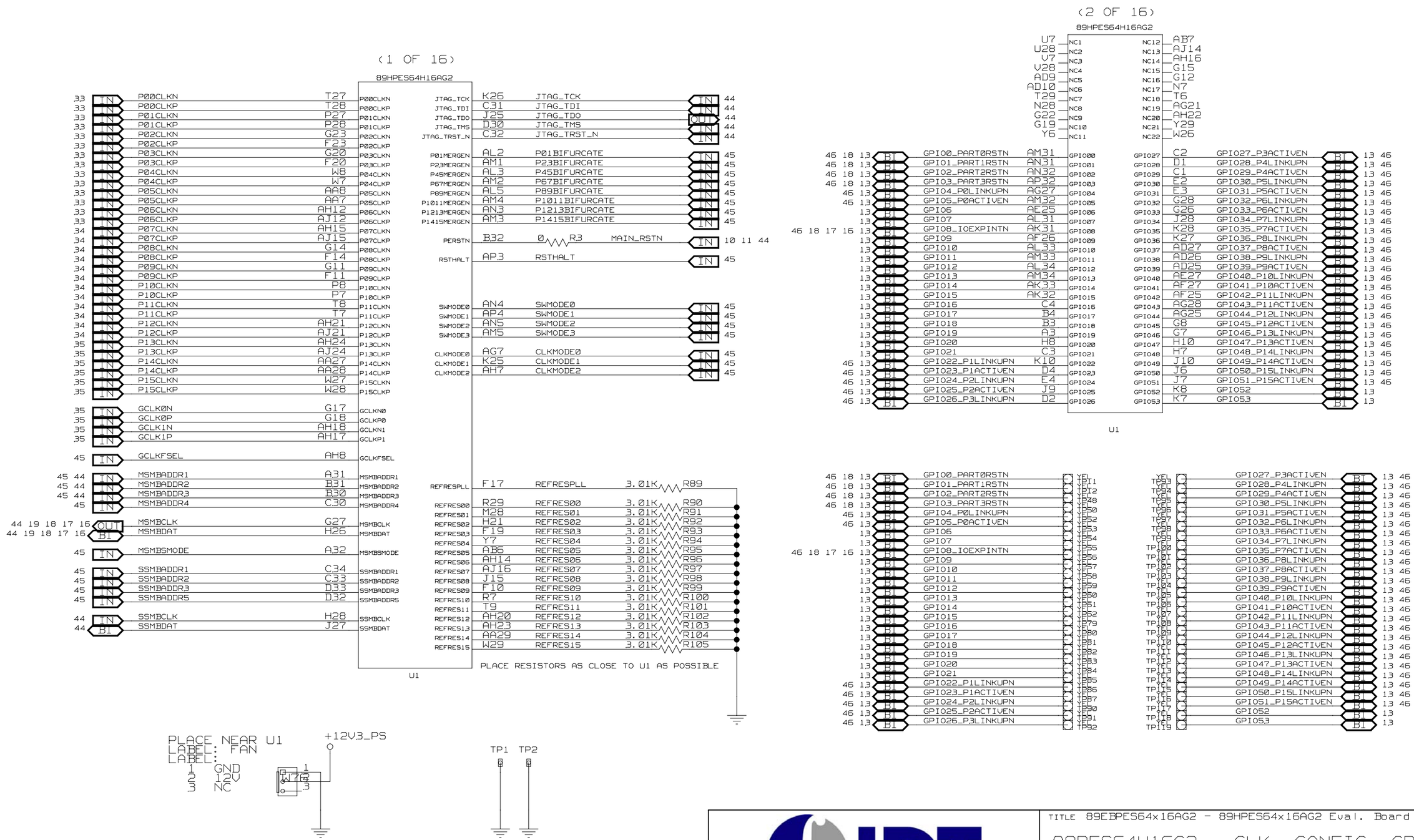

CONFIDENTIAL PROPERTY OF INTEGRATED DEVICE TECHNOLOGY, INC.
6024 SILVER CREEK VALLEY ROAD. SAN JOSE, CA 95138
COPYRIGHT (C)2009 IDT

TITLE 89EBPES64x16AG2 - 89HPES64x16AG2 Eval. Board

89PES64H16G2 - CLK, CONFIG, GPIO

SIZE	DRAWING NO.	FAB P/N	REV.
B	SCH-00184	18-689-000	1.0

AUTHOR	CHECKED BY
T. Tran	D. Huang

Thu Jan 29 15:53:43 2009 SHEET 13 OF 51

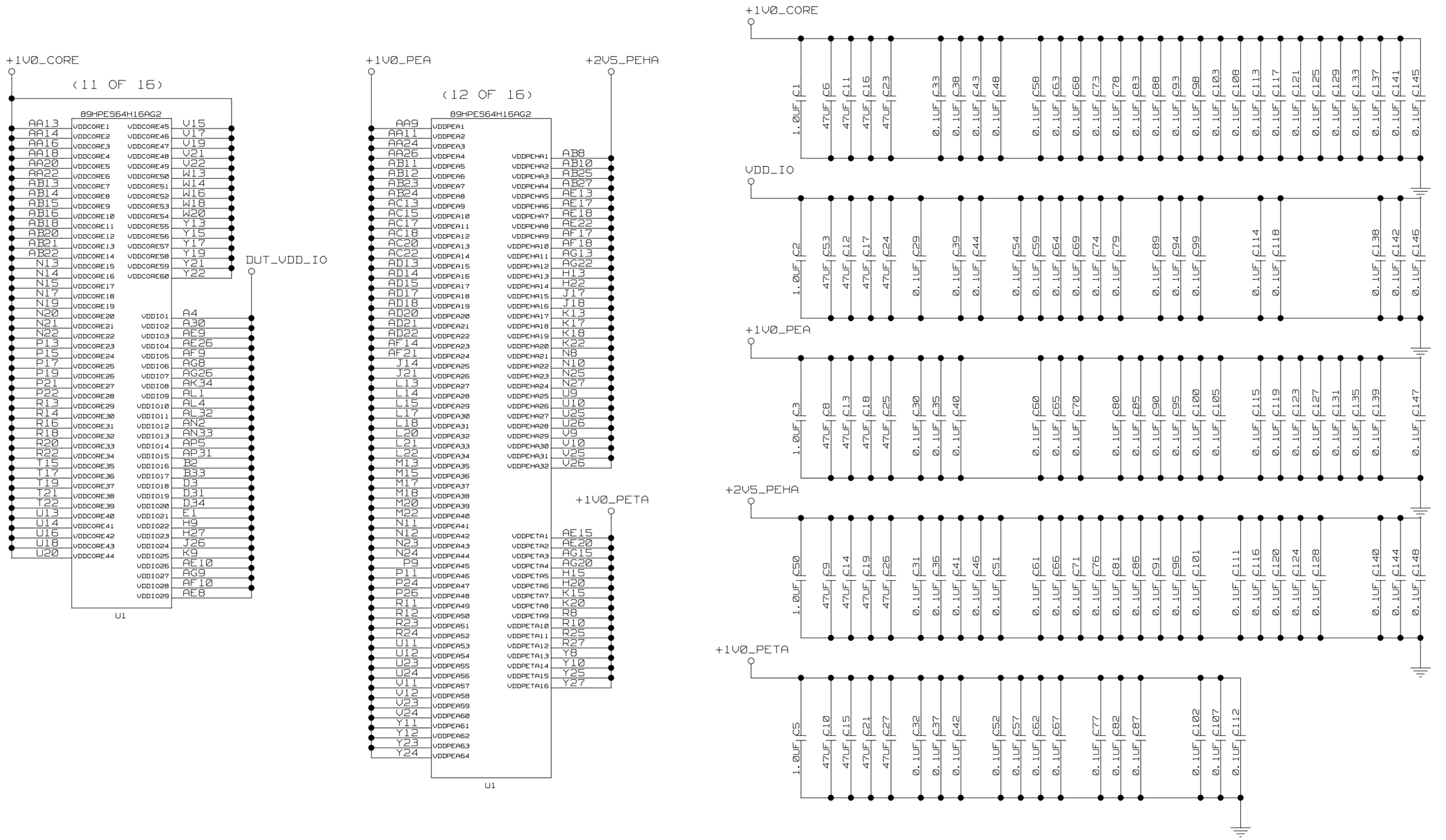

CONFIDENTIAL PROPERTY OF INTEGRATED DEVICE TECHNOLOGY, INC.
6024 SILVER CREEK VALLEY ROAD. SAN JOSE, CA 95138
COPYRIGHT (C)2009 IDT

TITLE 89EBPES64x16AG2 - 89HPES64x16AG2 Eval. Board

89PES64H16G2 - POWER

SIZE	DRAWING NO.	FAB P/N	REV.
B	SCH-00184	18-689-000	1.0

AUTHOR	CHECKED BY
T. Tran	D. Huang

Thu Jan 29 15:53:45 2009

(13 OF 16)

89HPES64H16AG2

A1	VSS1	VSS68	AD8
A2	VSS2	VSS69	AD11
A5	VSS3	VSS70	AD12
A8	VSS4	VSS71	AD16
A11	VSS5	VSS72	AD19
A14	VSS6	VSS73	AD23
A17	VSS7	VSS74	AD24
A20	VSS8	VSS75	AD28
A23	VSS9	VSS76	AD29
A26	VSS10	VSS77	AD32
A29	VSS11	VSS78	AE3
A33	VSS12	VSS79	AE6
A34	VSS13	VSS80	AE7
AA1	VSS14	VSS81	AE11
AA2	VSS15	VSS82	AE12
AA3	VSS16	VSS83	AE14
AA4	VSS17	VSS84	AE16
AA5	VSS18	VSS85	AE19
AA6	VSS19	VSS86	AE21
AA10	VSS20	VSS87	AE23
AA12	VSS21	VSS88	AE24
AA15	VSS22	VSS89	AE28
AA17	VSS23	VSS90	AE29
AA19	VSS24	VSS91	AE32
AA21	VSS25	VSS92	AF3
AA23	VSS26	VSS93	AF6
AA25	VSS27	VSS94	AF7
AA32	VSS28	VSS95	AF8
AB3	VSS29	VSS96	AF11
AB9	VSS30	VSS97	AF12
AB17	VSS31	VSS98	AF13
AB19	VSS32	VSS99	AF15
AB26	VSS33	VSS100	AF16
AB28	VSS34	VSS101	AF19
AB29	VSS35	VSS102	AF20
AB32	VSS36	VSS103	AF22
AC3	VSS37	VSS104	AF23
AC6	VSS38	VSS105	AF24
AC7	VSS39	VSS106	AF28
AC8	VSS40	VSS107	AF29
AC9	VSS41	VSS108	AF30
AC10	VSS42	VSS109	AF31
AC11	VSS43	VSS110	AF32
AC12	VSS44	VSS111	AF33
AC14	VSS45	VSS112	AF34
AC16	VSS46	VSS113	AG1
AC19	VSS47	VSS114	AG2
AC21	VSS48	VSS115	AG3
AC23	VSS49	VSS116	AG4
AC24	VSS50	VSS117	AG5
AC25	VSS51	VSS118	AG6
AC26	VSS52	VSS119	AG10
AC27	VSS53	VSS120	AG11
AC28	VSS54	VSS121	AG12
AC29	VSS55	VSS122	AG14
AC30	VSS56	VSS123	AG16
AC31	VSS57	VSS124	AG17
AC32	VSS58	VSS125	AG18
AC33	VSS59	VSS126	AG19
AC34	VSS60	VSS127	AG23
AD1	VSS61	VSS128	AG24
AD2	VSS62	VSS129	AG29
AD3	VSS63	VSS130	AG32
AD4	VSS64	VSS131	AH3
AD5	VSS65	VSS132	AH6
AD6	VSS66	VSS133	AH9
AD7	VSS67	VSS134	AH10

U1

(14 OF 16)

89HPES64H16AG2

AH11	VSS135	VSS202	AM17
AH13	VSS136	VSS203	AM18
AH19	VSS137	VSS204	AM19
AH25	VSS138	VSS205	AM20
AH26	VSS139	VSS206	AM21
AH27	VSS140	VSS207	AM22
AH28	VSS141	VSS208	AM23
AH29	VSS142	VSS209	AM24
AH32	VSS143	VSS210	AM25
AJ3	VSS144	VSS211	AM26
AJ6	VSS145	VSS212	AM27
AJ7	VSS146	VSS213	AM28
AJ8	VSS147	VSS214	AM29
AJ9	VSS148	VSS215	AM30
AJ10	VSS149	VSS216	AN1
AJ11	VSS150	VSS217	AN6
AJ13	VSS151	VSS218	AN9
AJ17	VSS152	VSS219	AN12
AJ18	VSS153	VSS220	AN15
AJ19	VSS154	VSS221	AN18
AJ20	VSS155	VSS222	AN21
AJ22	VSS156	VSS223	AN24
AJ23	VSS157	VSS224	AN27
AJ25	VSS158	VSS225	AN30
AJ26	VSS159	VSS226	AN34
AJ27	VSS160	VSS227	AP1
AJ28	VSS161	VSS228	AP2
AJ29	VSS162	VSS229	AP6
AJ30	VSS163	VSS230	AP9
AJ31	VSS164	VSS231	AP12
AJ32	VSS165	VSS232	AP15
AJ33	VSS166	VSS233	AP18
AJ34	VSS167	VSS234	AP21
AK1	VSS168	VSS235	AP24
AK2	VSS169	VSS236	AP27
AK3	VSS170	VSS237	AP30
AK4	VSS171	VSS238	AP33
AK5	VSS172	VSS239	AP34
AK6	VSS173	VSS240	B1
AK9	VSS174	VSS241	B5
AK12	VSS175	VSS242	B8
AK15	VSS176	VSS243	B11
AK18	VSS177	VSS244	B14
AK21	VSS178	VSS245	B17
AK24	VSS179	VSS246	B20
AK27	VSS180	VSS247	B23
AK30	VSS181	VSS248	B26
AL6	VSS182	VSS249	B29
AL9	VSS183	VSS250	B34
AL12	VSS184	VSS251	C5
AL15	VSS185	VSS252	C6
AL18	VSS186	VSS253	C7
AL21	VSS187	VSS254	C8
AL24	VSS188	VSS255	C9
AL27	VSS189	VSS256	C10
AL30	VSS190	VSS257	C11
AM6	VSS191	VSS258	C12
AM7	VSS192	VSS259	C13
AM8	VSS193	VSS260	C14
AM9	VSS194	VSS261	C15
AM10	VSS195	VSS262	C16
AM11	VSS196	VSS263	C17
AM12	VSS197	VSS264	C18
AM13	VSS198	VSS265	C19
AM14	VSS199	VSS266	C20
AM15	VSS200	VSS267	C21
AM16	VSS201	VSS268	C22

U1

(15 OF 16)

89HPES64H16AG2

C23	VSS269	VSS336	H12
C24	VSS270	VSS337	H14
C25	VSS271	VSS338	H16
C26	VSS272	VSS339	H17
C27	VSS273	VSS340	H18
C28	VSS274	VSS341	H19
C29	VSS275	VSS342	H23
D5	VSS276	VSS343	H24
D8	VSS277	VSS344	H25
D11	VSS278	VSS345	H29
D14	VSS279	VSS346	H30
D17	VSS280	VSS347	H31
D20	VSS281	VSS348	H32
D23	VSS282	VSS349	H33
D26	VSS283	VSS350	H34
D29	VSS284	VSS351	J1
E5	VSS285	VSS352	J2
E8	VSS286	VSS353	J3
E11	VSS287	VSS354	J4
E14	VSS288	VSS355	J5
E17	VSS289	VSS356	J8
E20	VSS290	VSS357	J11
E23	VSS291	VSS358	J12
E26	VSS292	VSS359	J13
E29	VSS293	VSS360	J16
E30	VSS294	VSS361	J19
E31	VSS295	VSS362	J20
E32	VSS296	VSS363	J22
E33	VSS297	VSS364	J23
E34	VSS298	VSS365	J24
F1	VSS299	VSS366	J29
F2	VSS300	VSS367	J32
F3	VSS301	VSS368	K3
F4	VSS302	VSS369	K6
F5	VSS303	VSS370	K11
F6	VSS304	VSS371	K12
F7	VSS305	VSS372	K14
F8	VSS306	VSS373	K16
F9	VSS307	VSS374	K19
F12	VSS308	VSS375	K21
F13	VSS309	VSS376	K23
F15	VSS310	VSS377	K24
F16	VSS311	VSS378	K29
F18	VSS312	VSS379	K32
F21	VSS313	VSS380	L3
F22	VSS314	VSS381	L6
F24	VSS315	VSS382	L7
F25	VSS316	VSS383	L8
F26	VSS317	VSS384	L9
F27	VSS318	VSS385	L10
F28	VSS319	VSS386	L11
F29	VSS320	VSS387	L12
F32	VSS321	VSS388	L16
G3	VSS322	VSS389	L19
G6	VSS323	VSS390	L23
G9	VSS324	VSS391	L24
G10	VSS325	VSS392	L25
G13	VSS326	VSS393	L26
G16	VSS327	VSS394	L27
G21	VSS328	VSS395	L28
G24	VSS329	VSS396	L29
G25	VSS330	VSS397	L30
G29	VSS331	VSS398	L31
G32	VSS332	VSS399	L32
H3	VSS333	VSS400	L33
H6	VSS334	VSS401	L34
H11	VSS335		

U1

(16 OF 16)

89HPES64H16AG2

M1	VSS402	VSS469	T16
M2	VSS403	VSS470	T18
M3	VSS404	VSS471	T20
M4	VSS405	VSS472	T23
M5	VSS406	VSS473	T24
M6	VSS407	VSS474	T25
M7	VSS408	VSS475	T26
M8	VSS409	VSS476	T32
M9	VSS410	VSS477	U3
M10	VSS411	VSS478	U6
M11	VSS412	VSS479	U8
M12	VSS413	VSS480	U15
M14	VSS414	VSS481	U17
M16	VSS415	VSS482	U19
M19	VSS416	VSS483	U21
M21	VSS417	VSS484	U22
M23	VSS418	VSS485	U27
M24	VSS419	VSS486	U29
M25	VSS420	VSS487	U30
M26	VSS421	VSS488	U31
M27	VSS422	VSS489	U32
M29	VSS423	VSS490	U33
M32	VSS424	VSS491	U34
N3	VSS425	VSS492	V1
N6	VSS426	VSS493	V2
N9	VSS427	VSS494	V3
N16	VSS428	VSS495	V4
N18	VSS429	VSS496	V5
N26	VSS430	VSS497	V6
N29	VSS431	VSS498	V8
N32	VSS432	VSS499	V13
P3	VSS433	VSS500	V14
P6	VSS434	VSS501	V16
P10	VSS435	VSS502	V18
P12	VSS436	VSS503	V20
P14	VSS437	VSS504	V27
P16	VSS438	VSS505	V29
P18	VSS439	VSS506	V32
P20	VSS440	VSS507	W3
P23	VSS441	VSS508	W6
P25	VSS442	VSS509	W9
P29	VSS443	VSS510	W10
P30	VSS444	VSS511	W11
P31	VSS445	VSS512	W12
P32	VSS446	VSS513	W15
P33	VSS447	VSS514	W17
P34	VSS448	VSS515	W19
R1	VSS449	VSS516	W21
R2	VSS450	VSS517	W22
R3	VSS451	VSS518	W23
R4	VSS452	VSS519	W24
R5	VSS453	VSS520	W25
R6	VSS454	VSS521	W32
R9	VSS455	VSS522	Y3
R15	VSS456	VSS523	Y9
R17	VSS457	VSS524	Y14
R19	VSS458	VSS525	Y16
R21	VSS459	VSS526	Y18
R26	VSS460	VSS527	Y20
R28	VSS461	VSS528	Y26
R32	VSS462	VSS529	Y28
T3	VSS463	VSS530	Y30
T10	VSS464	VSS531	Y31
T11	VSS465	VSS532	Y32
T12	VSS466	VSS533	Y33
T13	VSS467	VSS534	Y34
T14	VSS468		

U1

CONFIDENTIAL PROPERTY OF INTEGRATED DEVICE TECHNOLOGY, INC.
6024 SILVER CREEK VALLEY ROAD. SAN JOSE, CA 95138
COPYRIGHT (C)2009 IDT

TITLE 89EBPES64x16AG2 - 89HPES64x16AG2 Eval. Board

89PES64H16G2 - GND

SIZE	DRAWING NO.	FAB P/N	REV.
B	SCH-00184	18-689-000	1.0

AUTHOR	CHECKED BY
T. Tran	D. Huang

Thu Jan 29 15:53:46 2009 SHEET 15 OF 51

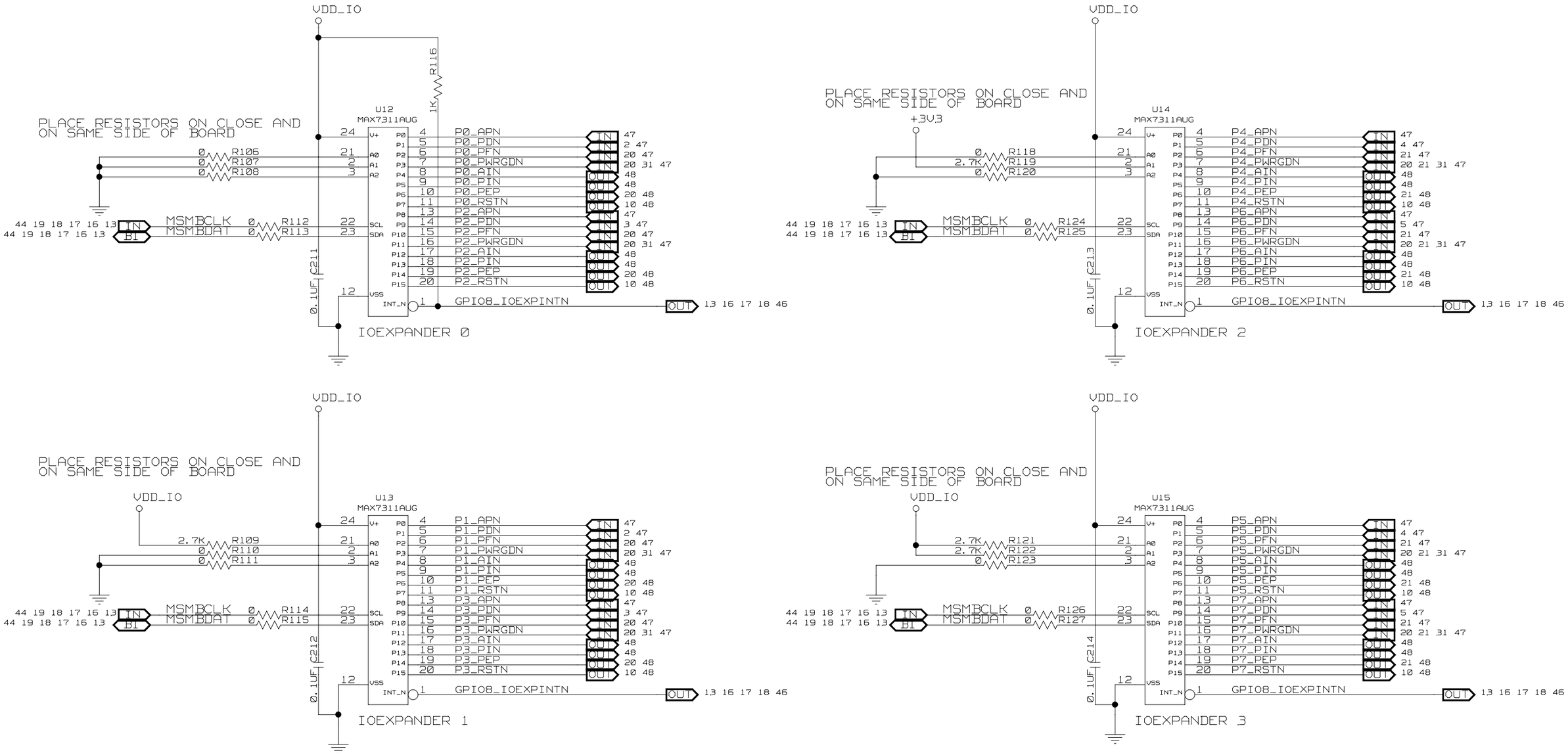

CONFIDENTIAL PROPERTY OF INTEGRATED DEVICE TECHNOLOGY, INC.
6024 SILVER CREEK VALLEY ROAD. SAN JOSE, CA 95138
COPYRIGHT (C)2009 IDT

TITLE 89EBPES64x16AG2 - 89HPES64x16AG2 Eval. Board			
IOEXPANDER 0-3			
SIZE B	DRAWING NO. SCH-00184	FAB P/N 18-689-000	REV. 1.0
AUTHOR T. Tran		CHECKED BY D. Huang	
Thu Jan 29 15:53:46 2009		SHEET 16 OF 51	

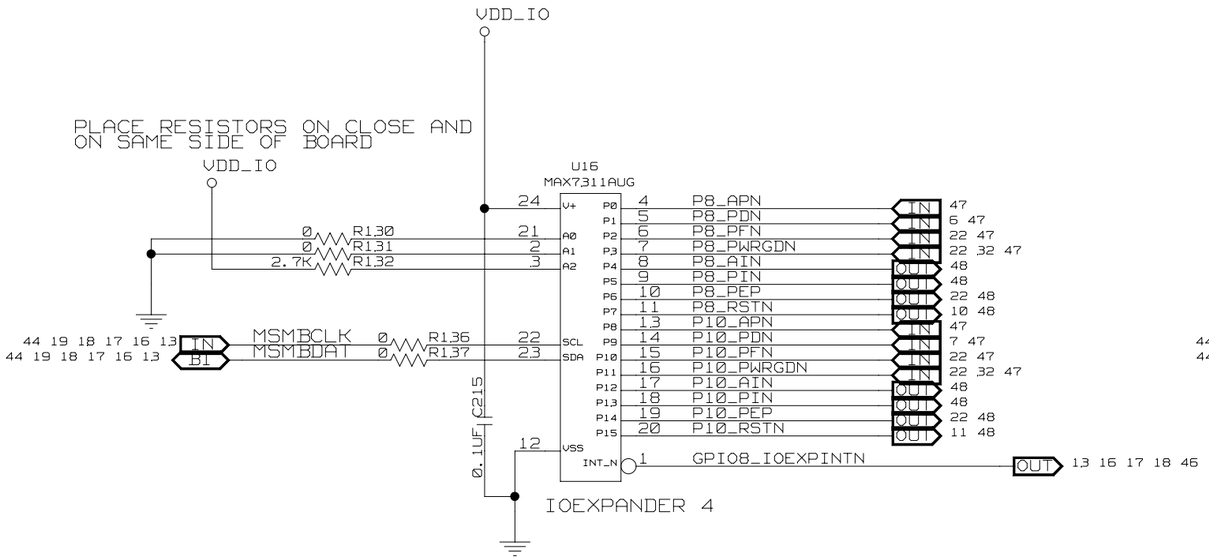

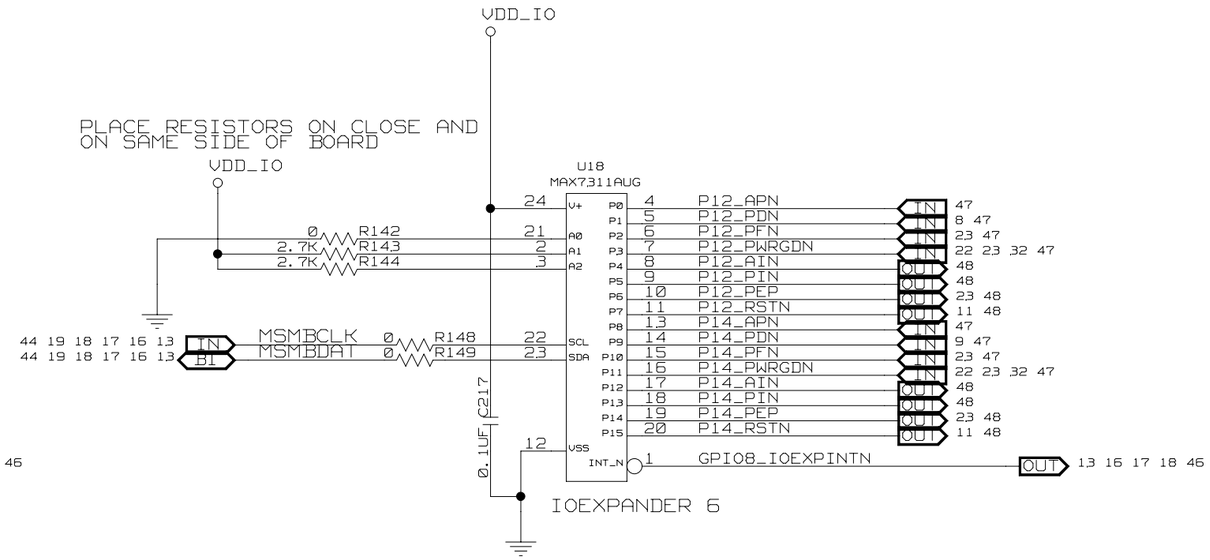

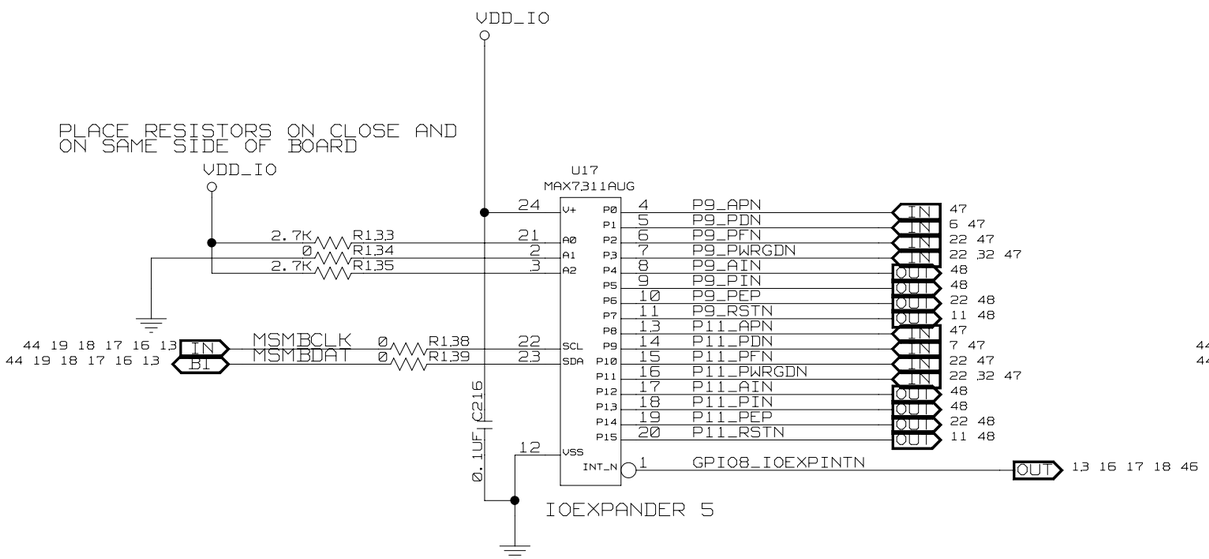

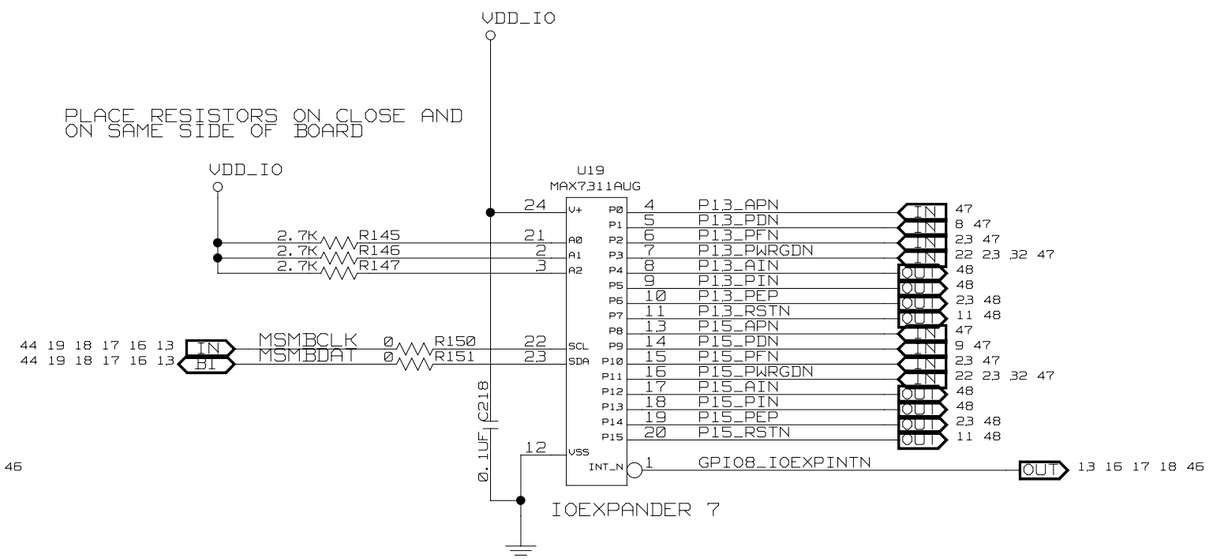

CONFIDENTIAL PROPERTY OF INTEGRATED DEVICE TECHNOLOGY, INC.
6024 SILVER CREEK VALLEY ROAD. SAN JOSE, CA 95138
COPYRIGHT (C)2009 IDT

TITLE 89EBPES64x16AG2 - 89HPES64x16AG2 Eval. Board

IOEXPANDER 4-7

SIZE	DRAWING NO.	FAB P/N	REV.
B	SCH-00184	18-689-000	1.0

AUTHOR	CHECKED BY
T. Tran	D. Huang

Thu Jan 29 15:53:47 2009 | SHEET 17 OF 51

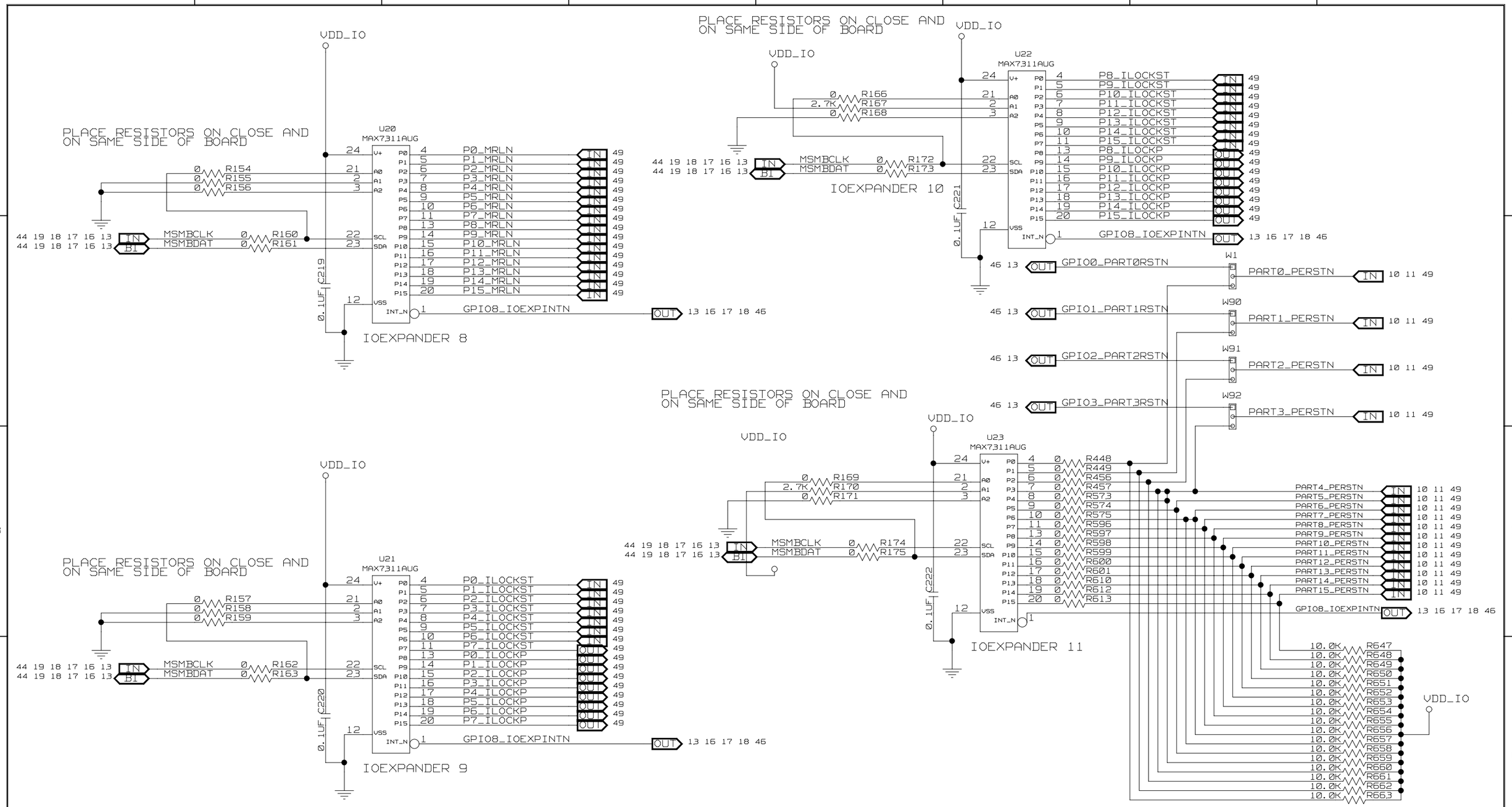

CONFIDENTIAL PROPERTY OF INTEGRATED DEVICE TECHNOLOGY, INC.
6024 SILVER CREEK VALLEY ROAD. SAN JOSE, CA 95138
COPYRIGHT (C)2009 IDT

TITLE 89EBPES64x16AG2 - 89HPES64x16AG2 Eval. Board

IOEXPANDER 8-11

SIZE	DRAWING NO.	FAB P/N	REV.
B	SCH-00184	18-689-000	1.0

AUTHOR: T. Tran

CHECKED BY: D. Huang

Thu Jan 29 15:58:58 2009

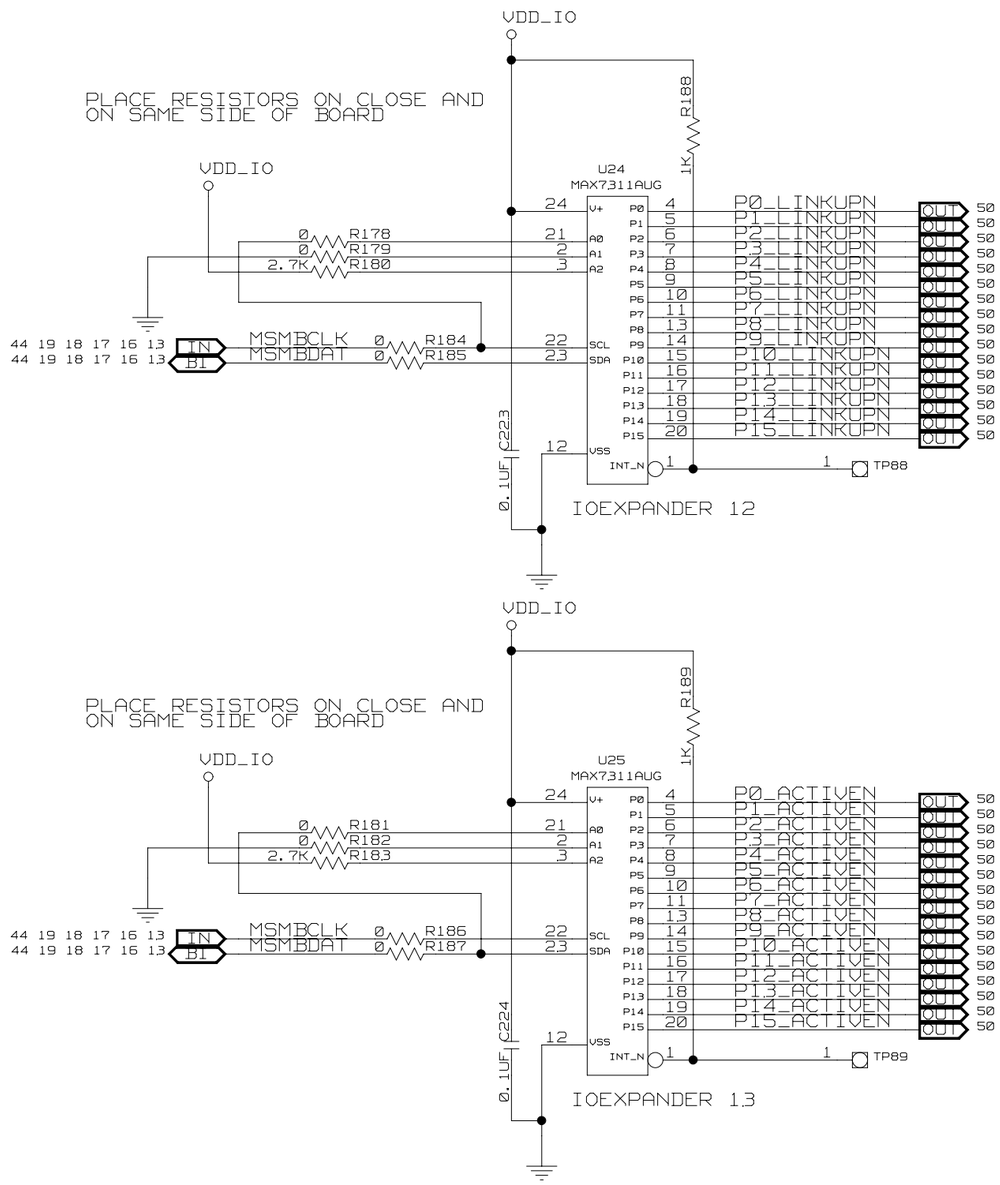

CONFIDENTIAL PROPERTY OF INTEGRATED DEVICE TECHNOLOGY, INC.
6024 SILVER CREEK VALLEY ROAD. SAN JOSE, CA 95138
COPYRIGHT (C)2009 IDT

TITLE 89EBPES64x16AG2 - 89HPES64x16AG2 Eval. Board			
IOEXPANDER 12-13			
SIZE B	DRAWING NO. SCH-00184	FAB P/N 18-689-000	REV. 1.0
AUTHOR T. Tran		CHECKED BY D. Huang	
Thu Jan 29 15:53:49 2009		SHEET 19 OF 51	

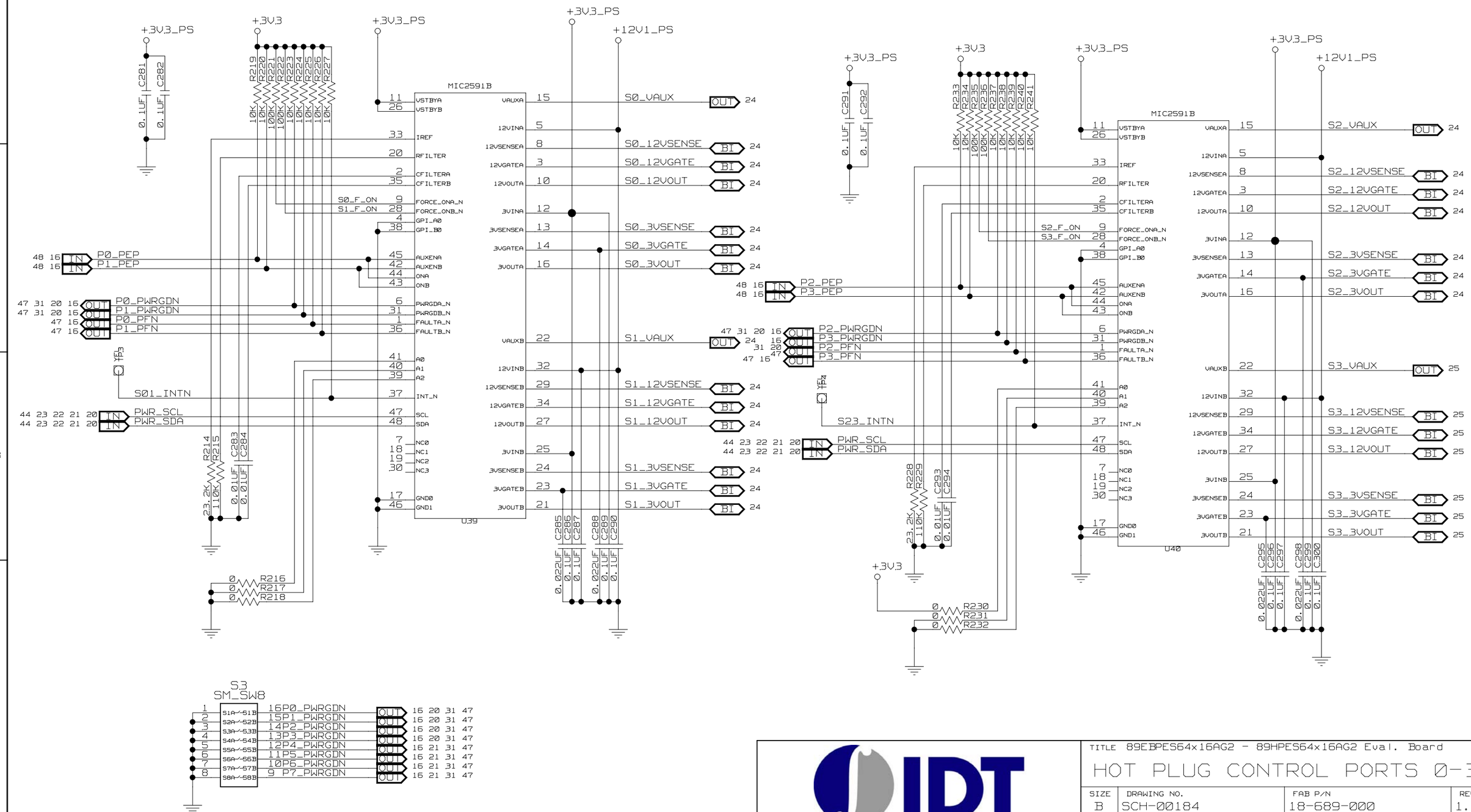

CONFIDENTIAL PROPERTY OF INTEGRATED DEVICE TECHNOLOGY, INC.
6024 SILVER CREEK VALLEY ROAD. SAN JOSE, CA 95138
COPYRIGHT (C)2009 IDT

TITLE 89EBPES64x16AG2 - 89HPES64x16AG2 Eval. Board

HOT PLUG CONTROL PORTS 0-3

SIZE	DRAWING NO.	FAB P/N	REV.
B	SCH-00184	18-689-000	1.0

AUTHOR: T. Tran

CHECKED BY: D. Huang

Thu Jan 29 15:53:50 2009

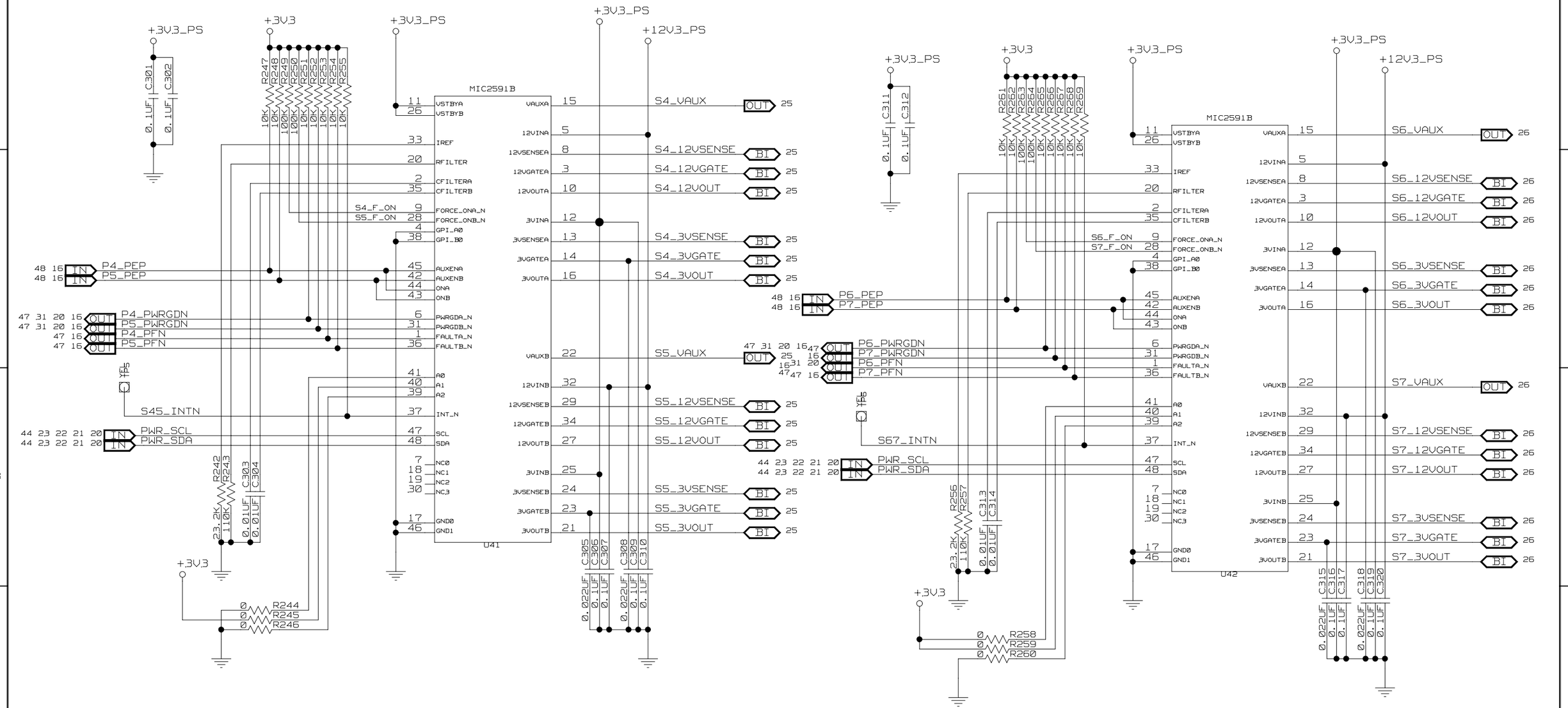

CONFIDENTIAL PROPERTY OF INTEGRATED DEVICE TECHNOLOGY, INC.
6024 SILVER CREEK VALLEY ROAD. SAN JOSE, CA 95138
COPYRIGHT (C)2009 IDT

TITLE 89EBPES64x16AG2 - 89HPES64x16AG2 Eval. Board

HOT PLUG CONTROL PORTS 4-7

SIZE	DRAWING NO.	FAB P/N	REV.
B	SCH-00184	18-689-000	1.0

AUTHOR: T. Tran

CHECKED BY: D. Huang

Thu Jan 29 15:53:50 2009

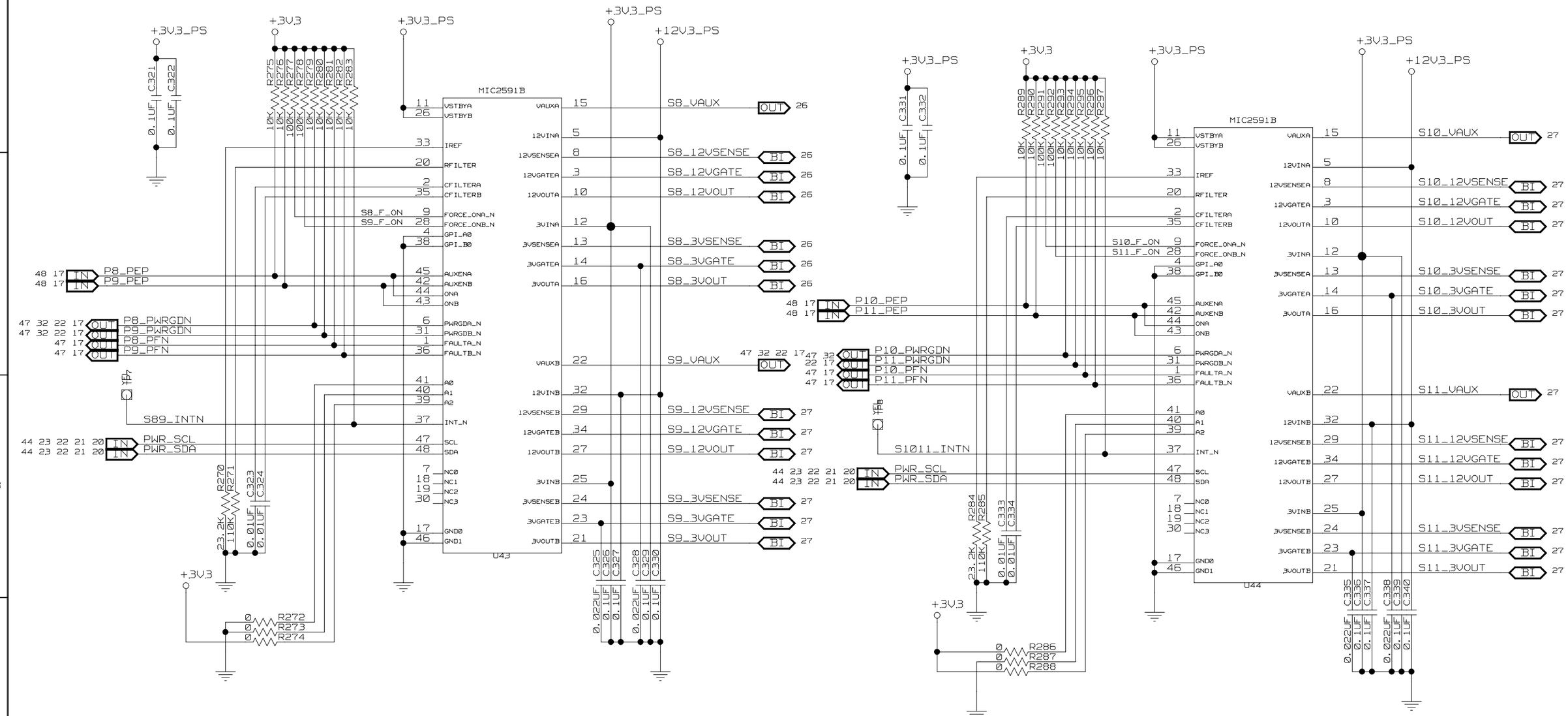

CONFIDENTIAL PROPERTY OF INTEGRATED DEVICE TECHNOLOGY, INC.
6024 SILVER CREEK VALLEY ROAD. SAN JOSE, CA 95138
COPYRIGHT (C)2009 IDT

TITLE 89EBPES64x16AG2 - 89HPES64x16AG2 Eval. Board

HOT PLUG CONTROL PORTS 8-11

SIZE	DRAWING NO.	FAB P/N	REV.
B	SCH-00184	18-689-000	1.0

AUTHOR: T. Tran

CHECKED BY: D. Huang

Thu Jan 29 15:53:51 2009

SHEET 22 OF 51

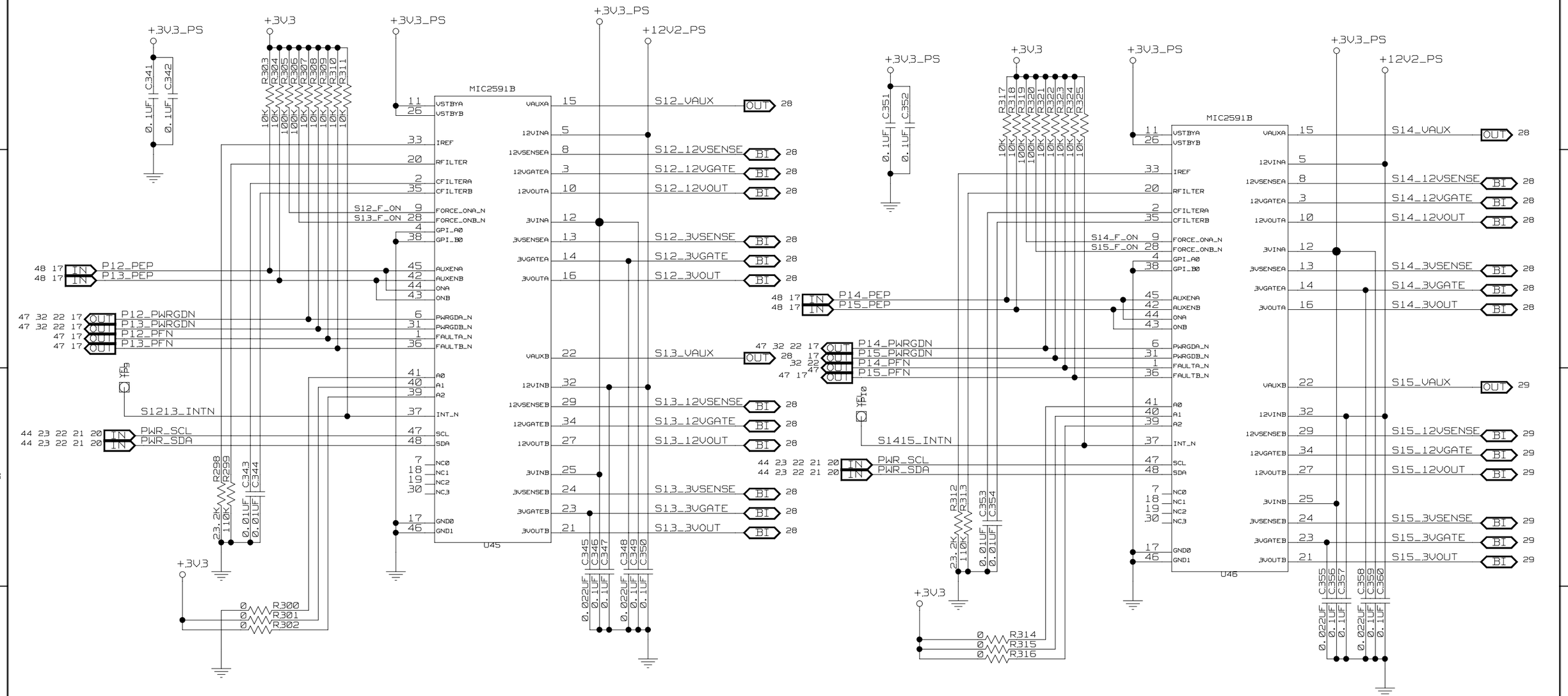

CONFIDENTIAL PROPERTY OF INTEGRATED DEVICE TECHNOLOGY, INC.
6024 SILVER CREEK VALLEY ROAD. SAN JOSE, CA 95138
COPYRIGHT (C)2009 IDT

TITLE 89EBPES64x16AG2 - 89HPES64x16AG2 Eval. Board

HOT PLUG CONTROL PORTS 12-15

SIZE	DRAWING NO.	FAB P/N	REV.
B	SCH-00184	18-689-000	1.0

AUTHOR	CHECKED BY
T. Tran	D. Huang

Thu Jan 29 15:53:52 2009 — SHEET 23 OF 51

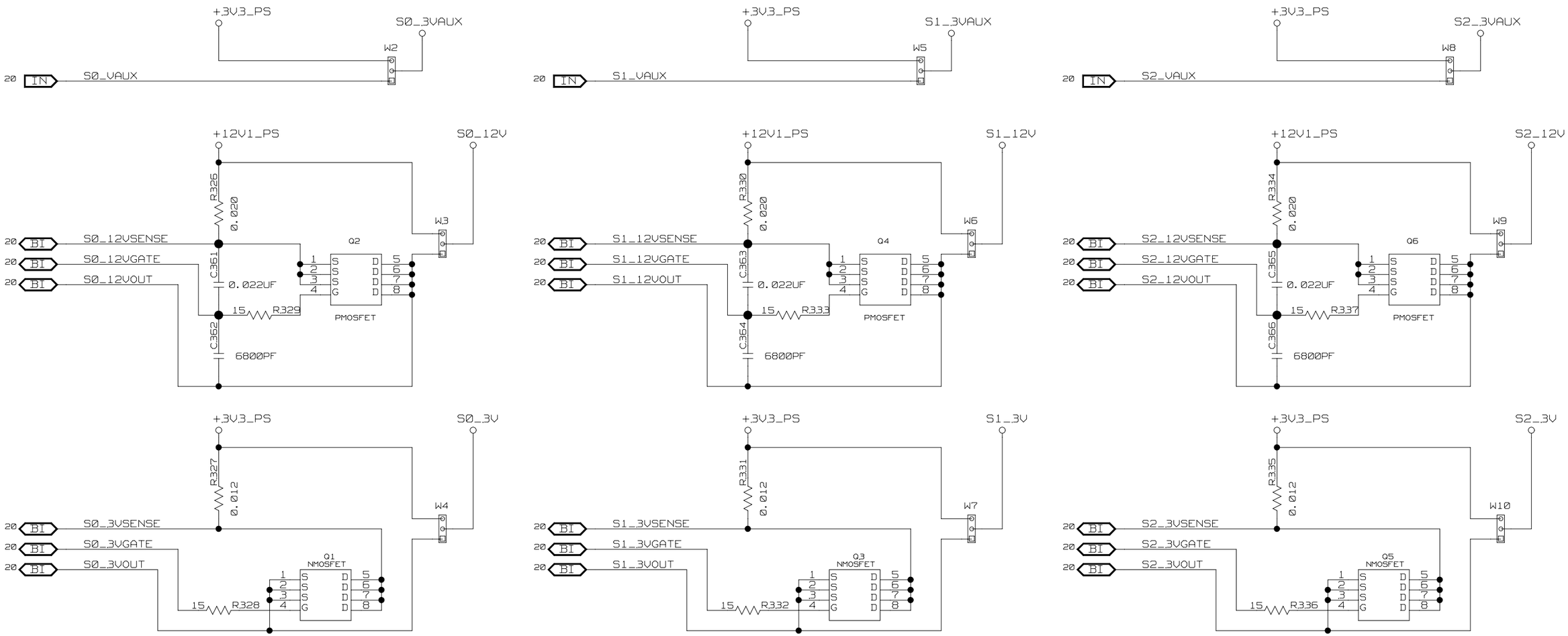

CONFIDENTIAL PROPERTY OF INTEGRATED DEVICE TECHNOLOGY, INC.
6024 SILVER CREEK VALLEY ROAD. SAN JOSE, CA 95138
COPYRIGHT (C)2009 IDT

TITLE 89EBPES64x16AG2 - 89HPES64x16AG2 Eval. Board			
HOT PLUG - MOSFETS PORTS 0-2			
SIZE B	DRAWING NO. SCH-00184	FAB P/N 18-689-000	REV. 1.0
AUTHOR T. Tran		CHECKED BY D. Huang	
Thu Jan 29 15:53:53 2009		SHEET 24 OF 51	

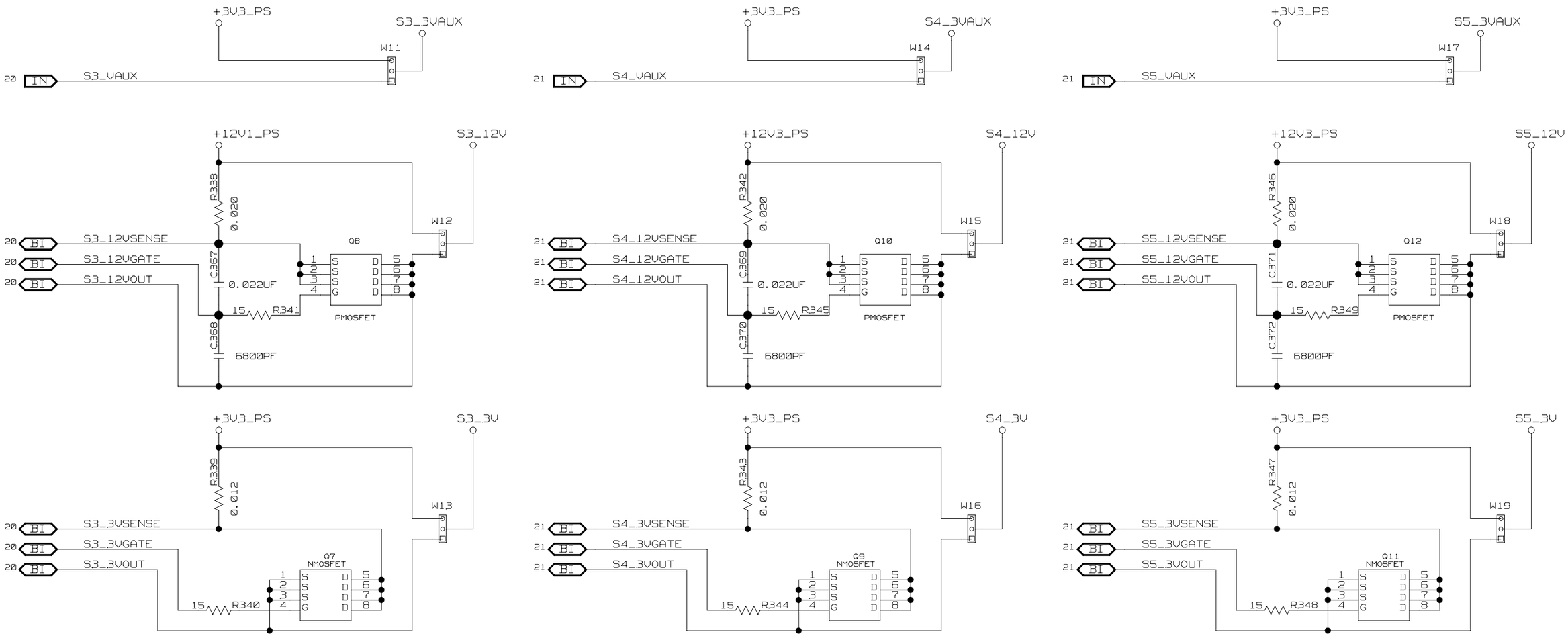

CONFIDENTIAL PROPERTY OF INTEGRATED DEVICE TECHNOLOGY, INC.
6024 SILVER CREEK VALLEY ROAD. SAN JOSE, CA 95138
COPYRIGHT (C)2009 IDT

TITLE 89EBPES64x16AG2 - 89HPES64x16AG2 Eval. Board			
HOT PLUG - MOSFETS PORTS 3-5			
SIZE B	DRAWING NO. SCH-00184	FAB P/N 18-689-000	REV. 1.0
AUTHOR T. Tran		CHECKED BY D. Huang	
Thu Jan 29 15:53:53 2009		SHEET 25 OF 51	

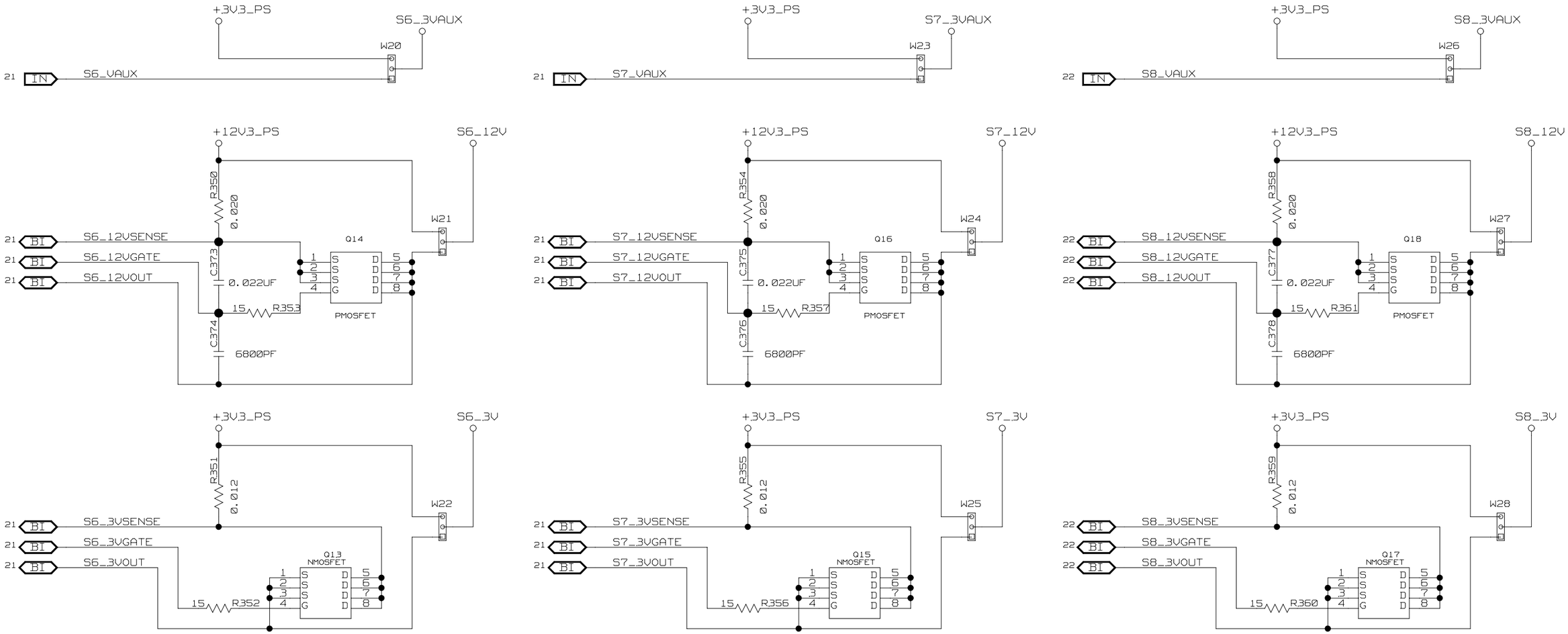

CONFIDENTIAL PROPERTY OF INTEGRATED DEVICE TECHNOLOGY, INC.
6024 SILVER CREEK VALLEY ROAD. SAN JOSE, CA 95138
COPYRIGHT (C)2009 IDT

TITLE 89EBPES64x16AG2 - 89HPES64x16AG2 Eval. Board

HOT PLUG - MOSFETS PORTS 6-8

SIZE	DRAWING NO.	FAB P/N	REV.
B	SCH-00184	18-689-000	1.0

AUTHOR	CHECKED BY
T. Tran	D. Huang

Thu Jan 29 15:53:54 2009 SHEET 26 OF 51

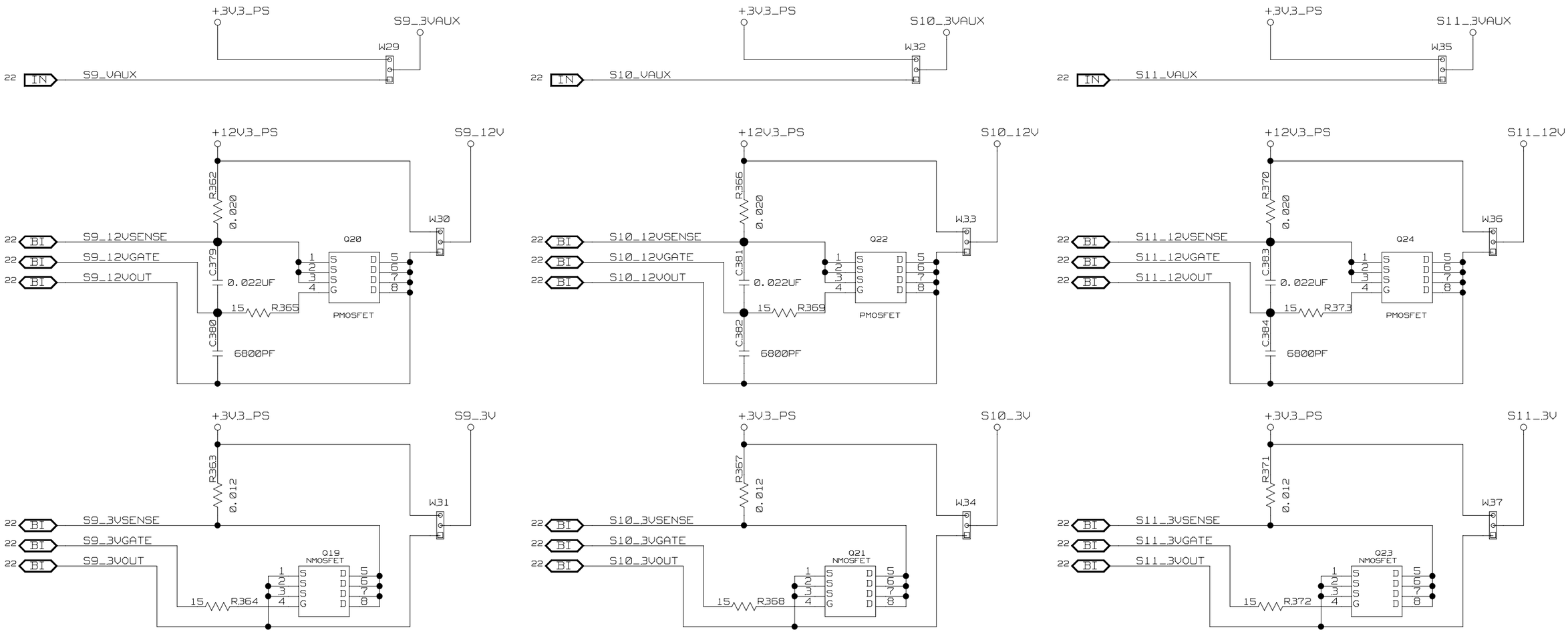

CONFIDENTIAL PROPERTY OF INTEGRATED DEVICE TECHNOLOGY, INC.
6024 SILVER CREEK VALLEY ROAD. SAN JOSE, CA 95138
COPYRIGHT (C)2009 IDT

TITLE 89EBPES64x16AG2 - 89HPES64x16AG2 Eval. Board			
HOT PLUG - MOSFETS PORTS 9-11			
SIZE B	DRAWING NO. SCH-00184	FAB P/N 18-689-000	REV. 1.0
AUTHOR T. Tran		CHECKED BY D. Huang	
Thu Jan 29 15:53:54 2009		SHEET 27 OF 51	

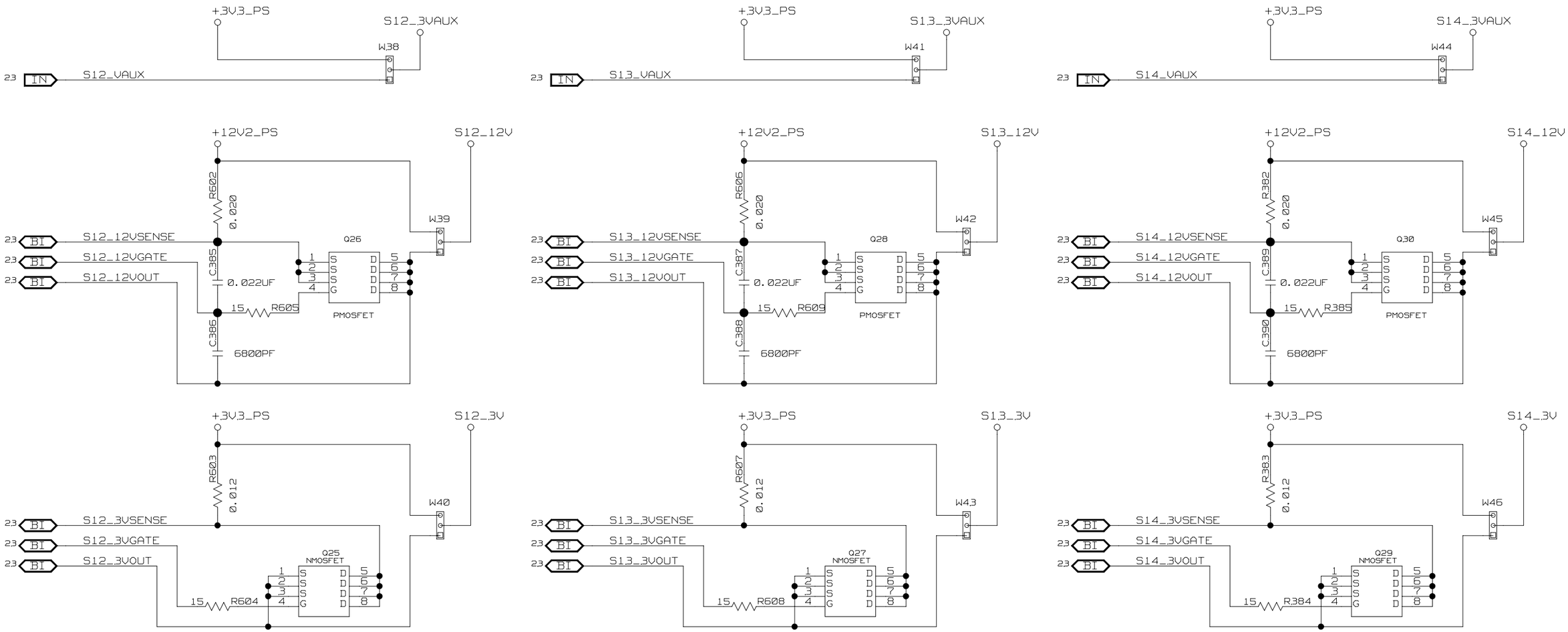

CONFIDENTIAL PROPERTY OF INTEGRATED DEVICE TECHNOLOGY, INC.
6024 SILVER CREEK VALLEY ROAD. SAN JOSE, CA 95138
COPYRIGHT (C)2009 IDT

TITLE 89EBPES64x16AG2 - 89HPES64x16AG2 Eval. Board

HOT PLUG - MOSFETS PORTS 12-14

SIZE	DRAWING NO.	FAB P/N	REV.
B	SCH-00184	18-689-000	1.0

AUTHOR	CHECKED BY
T. Tran	D. Huang

Thu Jan 29 15:53:55 2009 SHEET 28 OF 51

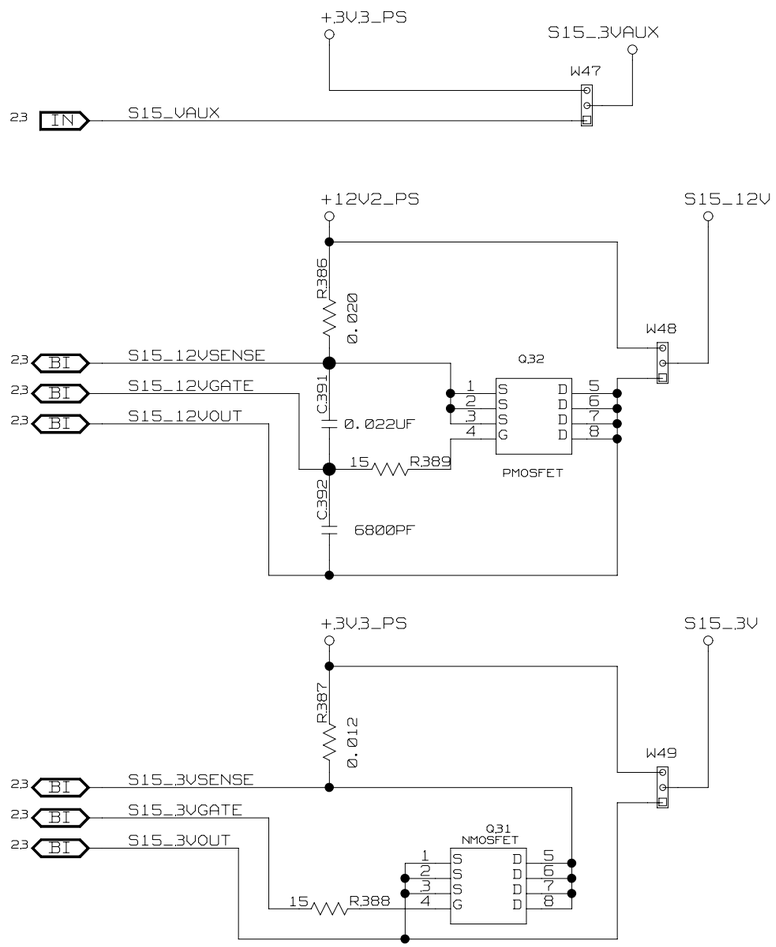

CONFIDENTIAL PROPERTY OF INTEGRATED DEVICE TECHNOLOGY, INC.
6024 SILVER CREEK VALLEY ROAD. SAN JOSE, CA 95138
COPYRIGHT (C)2009 IDT

TITLE 89EBPES64x16AG2 - 89HPES64x16AG2 Eval. Board			
HOT PLUG - MOSFETS PORT 15			
SIZE B	DRAWING NO. SCH-00184	FAB P/N 18-689-000	REV. 1.0
AUTHOR T. Tran		CHECKED BY D. Huang	
Thu Jan 29 15:53:55 2009		SHEET 29 OF 51	

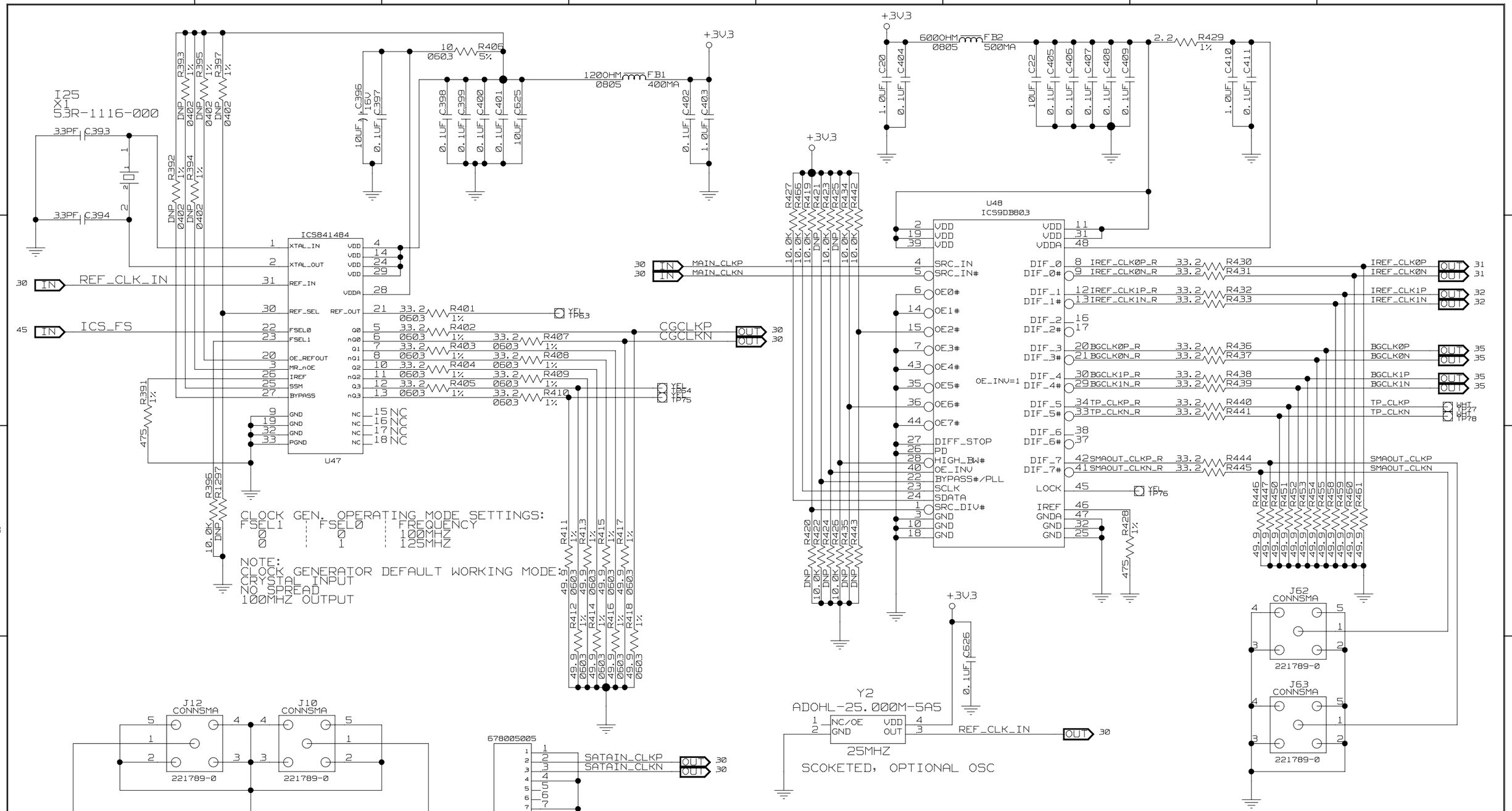

CONFIDENTIAL PROPERTY OF INTEGRATED DEVICE TECHNOLOGY, INC.
6024 SILVER CREEK VALLEY ROAD. SAN JOSE, CA 95138
COPYRIGHT (C)2009 IDT

TITLE 89EBPES64x16AG2 - 89HPES64x16AG2 Eval. Board

CLOCK

SIZE	DRAWING NO.	FAB P/N	REV.
B	SCH-00184	18-689-000	1.0

AUTHOR	CHECKED BY
T. Tran	D. Huang

Thu Jan 29 15:53:56 2009

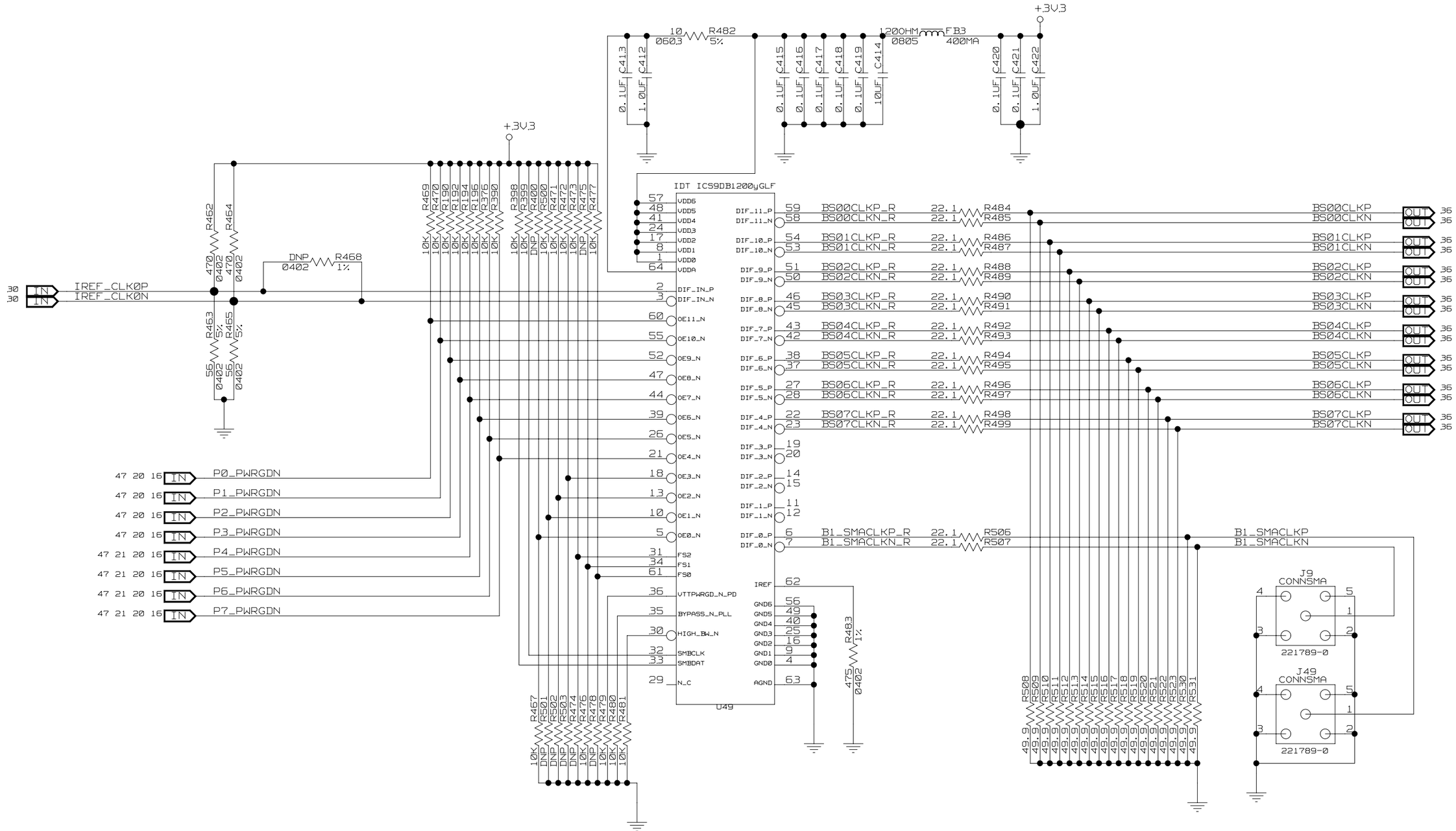

CONFIDENTIAL PROPERTY OF INTEGRATED DEVICE TECHNOLOGY, INC.
6024 SILVER CREEK VALLEY ROAD. SAN JOSE, CA 95138
COPYRIGHT (C)2009 IDT

TITLE 89EBPES64x16AG2 - 89HPES64x16AG2 Eval. Board

CLOCK BUFFER - 1

SIZE	DRAWING NO.	FAB P/N	REV.
B	SCH-00184	18-689-000	1.0

AUTHOR	CHECKED BY
T. Tran	D. Huang

Thu Jan 29 15:53:57 2009

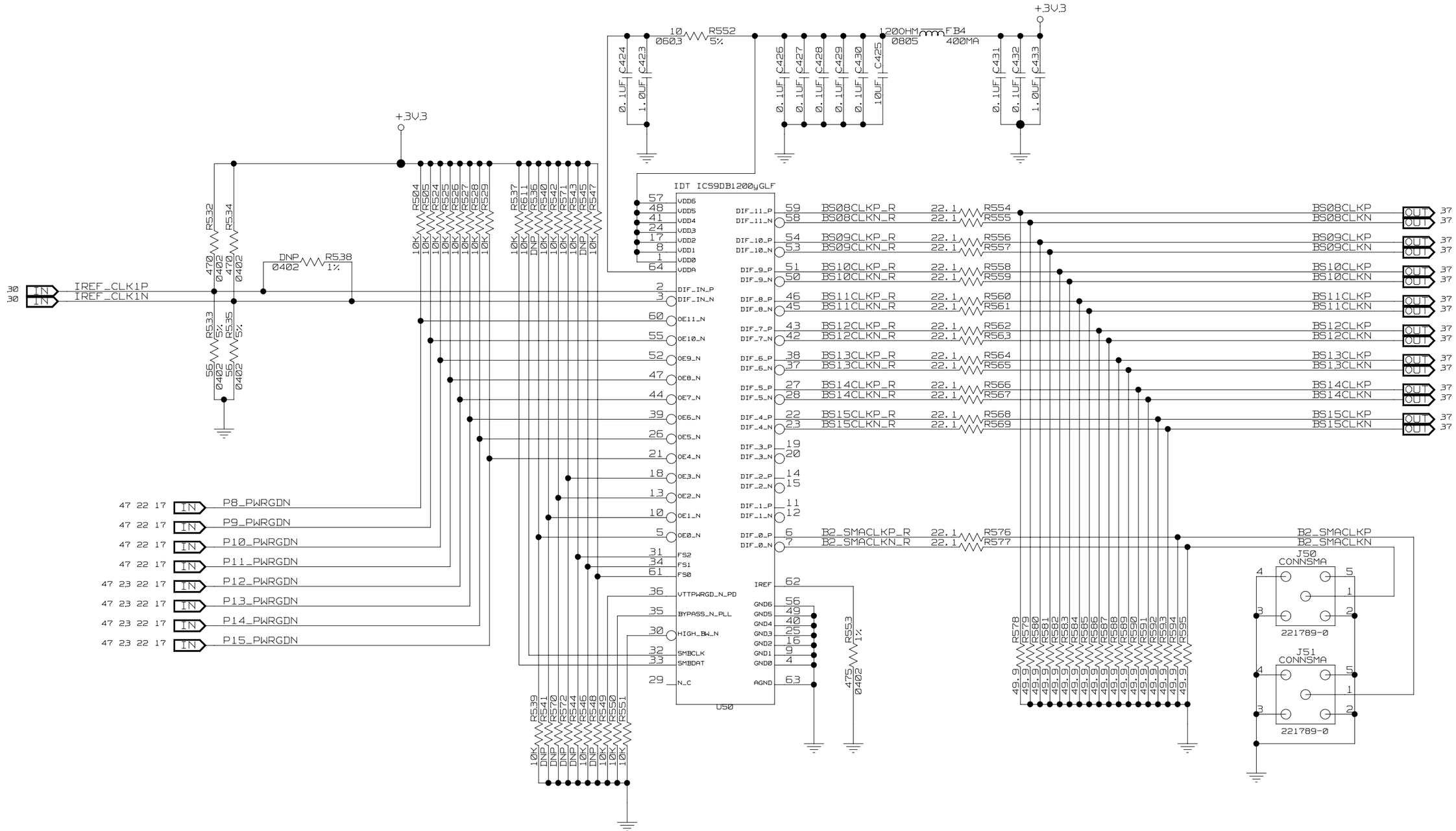

CONFIDENTIAL PROPERTY OF INTEGRATED DEVICE TECHNOLOGY, INC.
6024 SILVER CREEK VALLEY ROAD. SAN JOSE, CA 95138
COPYRIGHT (C)2009 IDT

TITLE 89EBPES64x16AG2 - 89HPES64x16AG2 Eval. Board

CLOCK BUFFER - 2

SIZE	DRAWING NO.	FAB P/N	REV.
B	SCH-00184	18-689-000	1.0

AUTHOR	CHECKED BY
T. Tran	D. Huang

Thu Jan 29 15:53:58 2009

PXXCLK - DUT CLK
SHXXCLK - SLOT HDR. CLK

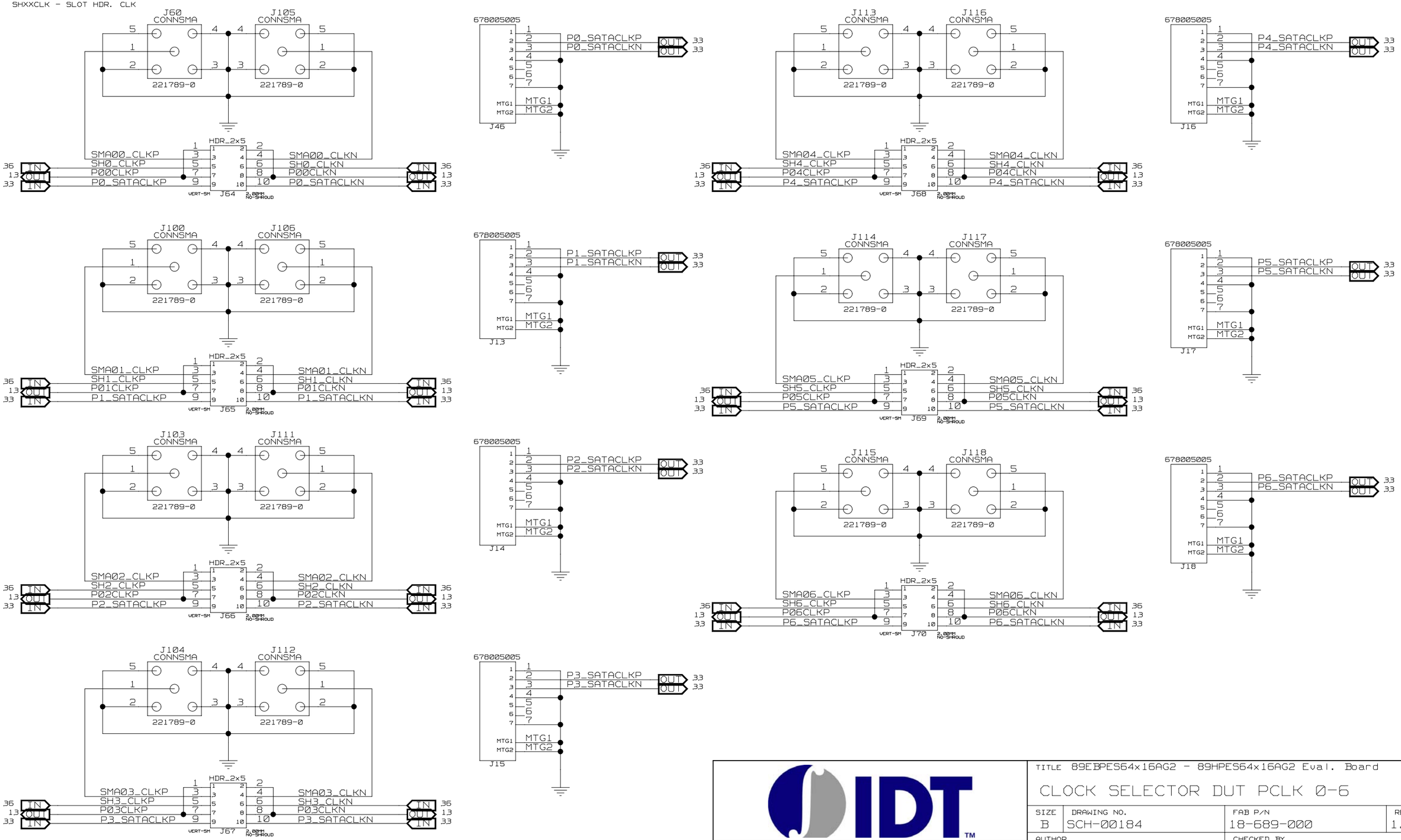

IDT™

CONFIDENTIAL PROPERTY OF INTEGRATED DEVICE TECHNOLOGY, INC.
6024 SILVER CREEK VALLEY ROAD. SAN JOSE, CA 95138
COPYRIGHT (C)2009 IDT

TITLE 89EBPES64x16AG2 - 89HPES64x16AG2 Eval. Board			
CLOCK SELECTOR DUT PCLK 0-6			
SIZE B	DRAWING NO. SCH-00184	FAB P/N 18-689-000	REV. 1.0
AUTHOR T. Tran		CHECKED BY D. Huang	
Thu Jan 29 15:53:58 2009		SHEET 33 OF 51	

PXXCLK - DUT CLK
SHXXCLK - SLOT HDR. CLK

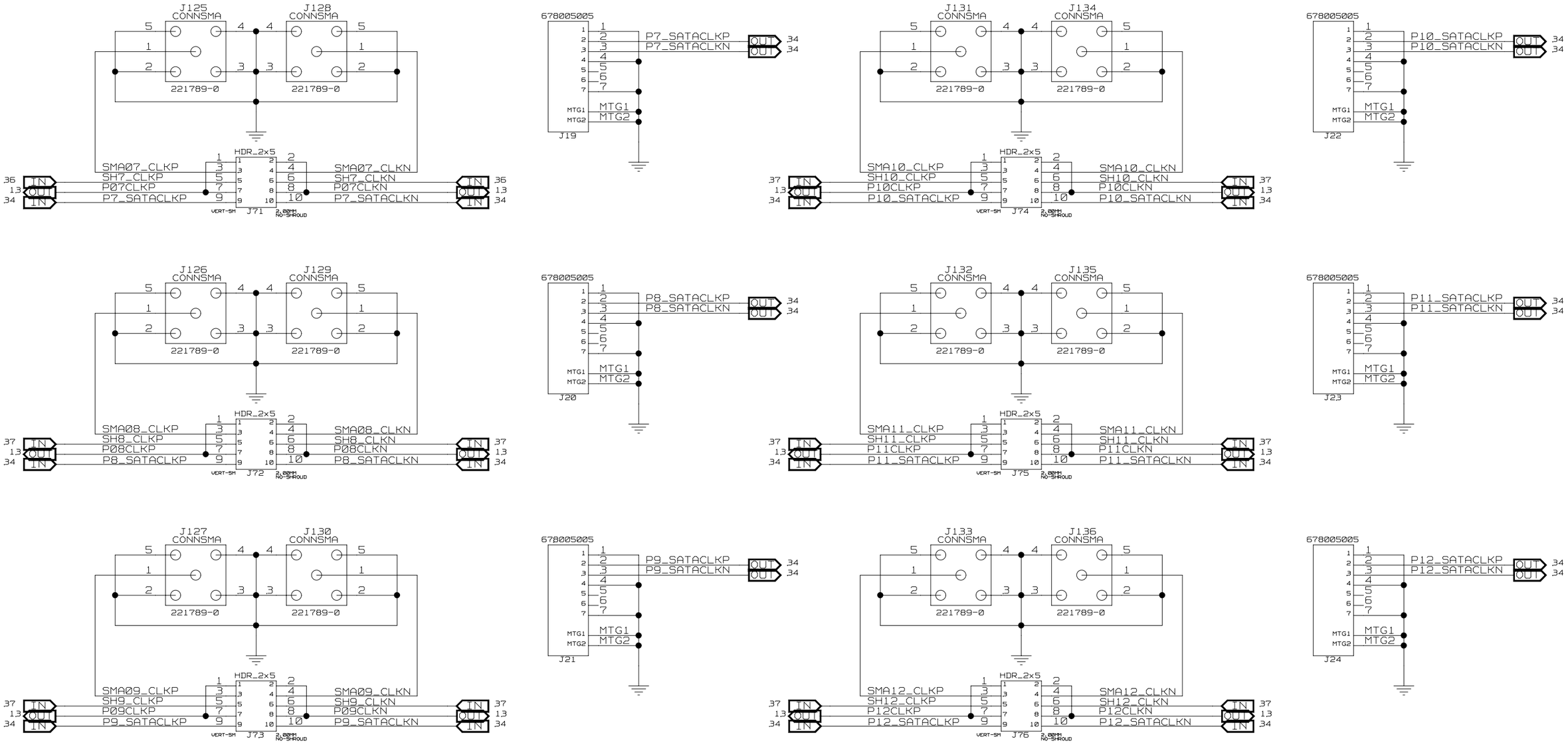

CONFIDENTIAL PROPERTY OF INTEGRATED DEVICE TECHNOLOGY, INC.
6024 SILVER CREEK VALLEY ROAD. SAN JOSE, CA 95138
COPYRIGHT (C)2009 IDT

TITLE 89EBPES64x16AG2 - 89HPES64x16AG2 Eval. Board

CLOCK SELECTOR DUT PCLK 7-12

SIZE	DRAWING NO.	FAB P/N	REV.
B	SCH-00184	18-689-000	1.0

AUTHOR	CHECKED BY
T. Tran	D. Huang

Thu Jan 29 15:54:12 2009 SHEET 34 OF 51

PXXCLK - DUT CLK
SHXXCLK - SLOT HDR. CLK

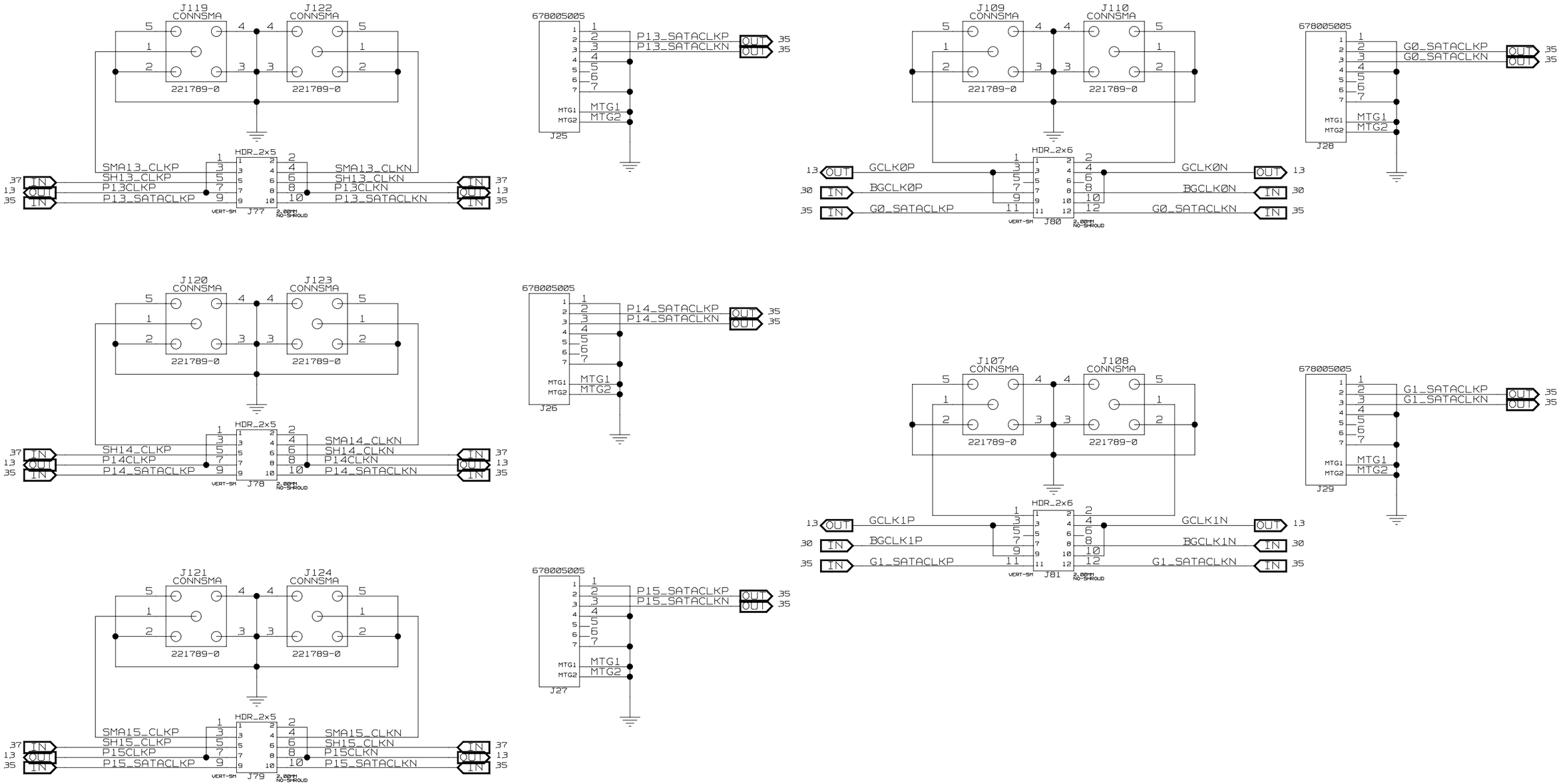

CONFIDENTIAL PROPERTY OF INTEGRATED DEVICE TECHNOLOGY, INC.
6024 SILVER CREEK VALLEY ROAD. SAN JOSE, CA 95138
COPYRIGHT (C)2009 IDT

TITLE 89EBPES64x16AG2 - 89HPES64x16AG2 Eval. Board			
CLOCK SELECTOR DUT PCLK 13-15, GCLK 0-1			
SIZE B	DRAWING NO. SCH-00184	FAB P/N 18-689-000	REV. 1.0
AUTHOR T. Tran		CHECKED BY D. Huang	
Thu Jan 29 15:53:59 2009		SHEET 35 OF 51	

SXXCLK - SLOT CLK
BSXXLCK - BUFFER SLOT CLK
SHXXCLK - SLOT HDR. CLK

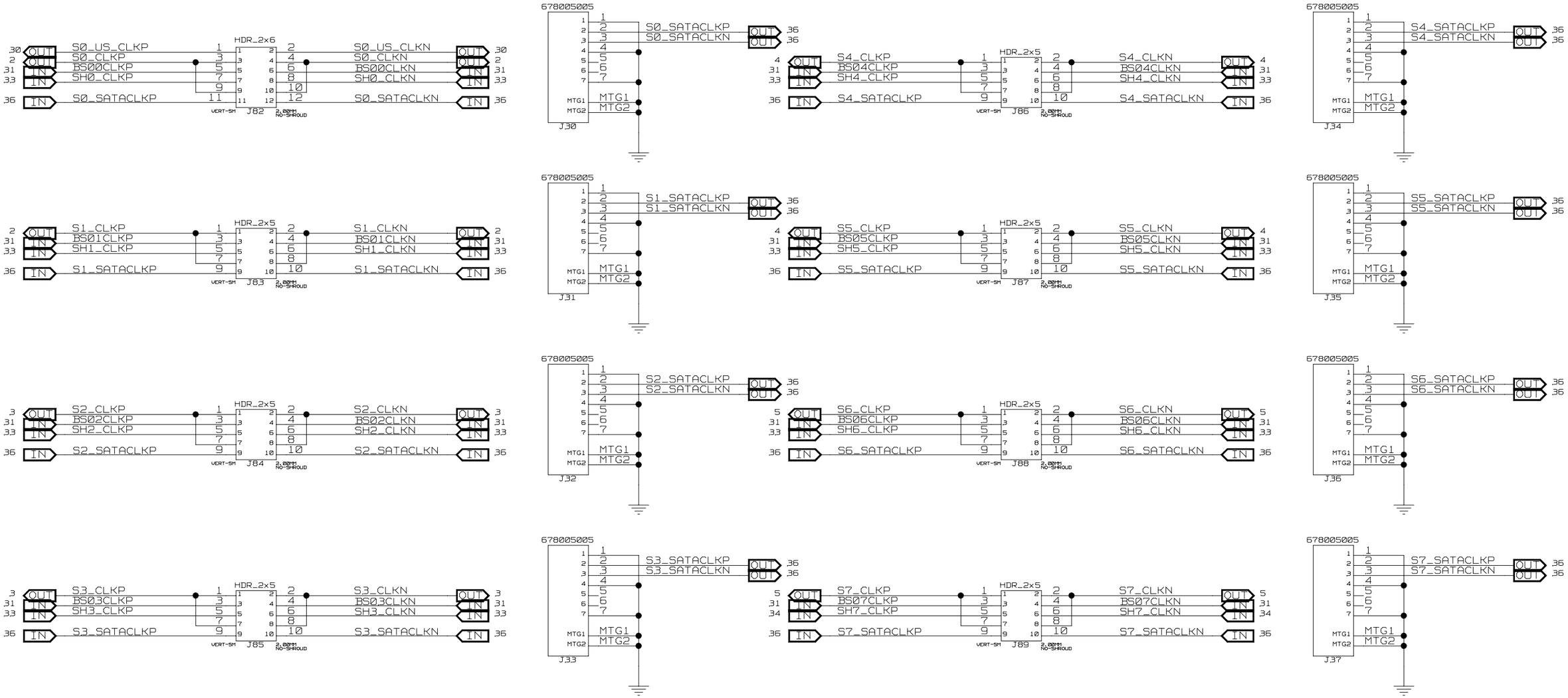

CONFIDENTIAL PROPERTY OF INTEGRATED DEVICE TECHNOLOGY, INC.
6024 SILVER CREEK VALLEY ROAD. SAN JOSE, CA 95138
COPYRIGHT (C)2009 IDT

TITLE 89EBPES64x16AG2 - 89HPES64x16AG2 Eval. Board			
CLOCK SELECTOR SLOTS 0-7			
SIZE B	DRAWING NO. SCH-00184	FAB P/N 18-689-000	REV. 1.0
AUTHOR T. Tran		CHECKED BY D. Huang	
Thu Jan 29 15:53:59 2009		SHEET 36 OF 51	

SXXCLK - SLOT CLK
BSXXLCK - BUFFER SLOT CLK
SHXXCLK - SLOT HDR. CLK

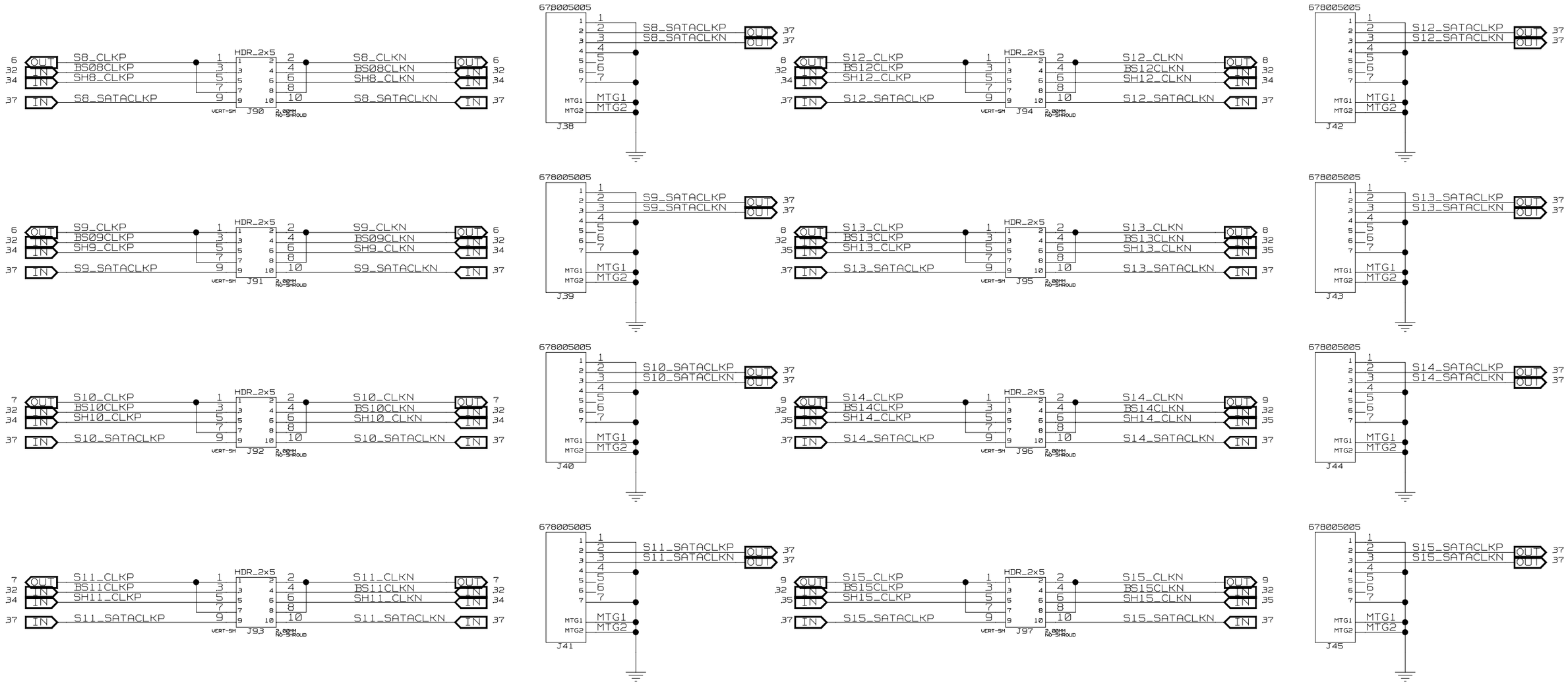

IDT™

CONFIDENTIAL PROPERTY OF INTEGRATED DEVICE TECHNOLOGY, INC.
6024 SILVER CREEK VALLEY ROAD. SAN JOSE, CA 95138
COPYRIGHT (C)2009 IDT

TITLE 89EBPES64x16AG2 - 89HPES64x16AG2 Eval. Board			
CLOCK SELECTOR SLOTS 8-15			
SIZE B	DRAWING NO. SCH-00184	FAB P/N 18-689-000	REV. 1.0
AUTHOR T. Tran		CHECKED BY D. Huang	
Thu Jan 29 15:54:00 2009		SHEET 37 OF 51	

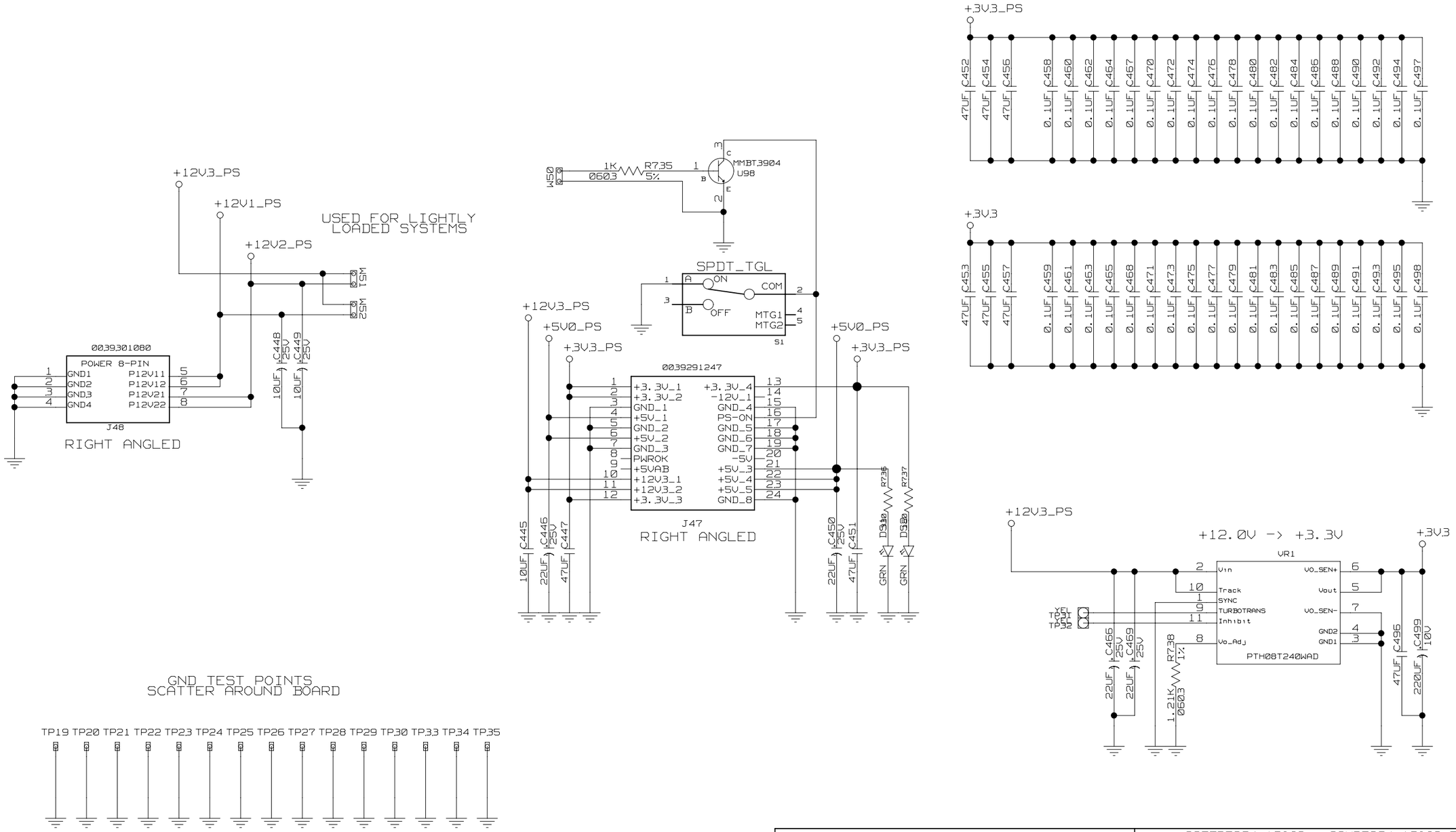

CONFIDENTIAL PROPERTY OF INTEGRATED DEVICE TECHNOLOGY, INC.
6024 SILVER CREEK VALLEY ROAD. SAN JOSE, CA 95138
COPYRIGHT (C)2009 IDT

TITLE 89EBPES64x16AG2 - 89HPES64x16AG2 Eval. Board

POWER CONNECTORS

SIZE	DRAWING NO.	FAB P/N	REV.
B	SCH-00184	18-689-000	1.0

AUTHOR	CHECKED BY
T. Tran	D. Huang

Thu Jan 29 15:54:01 2009 — SHEET 38 OF 51

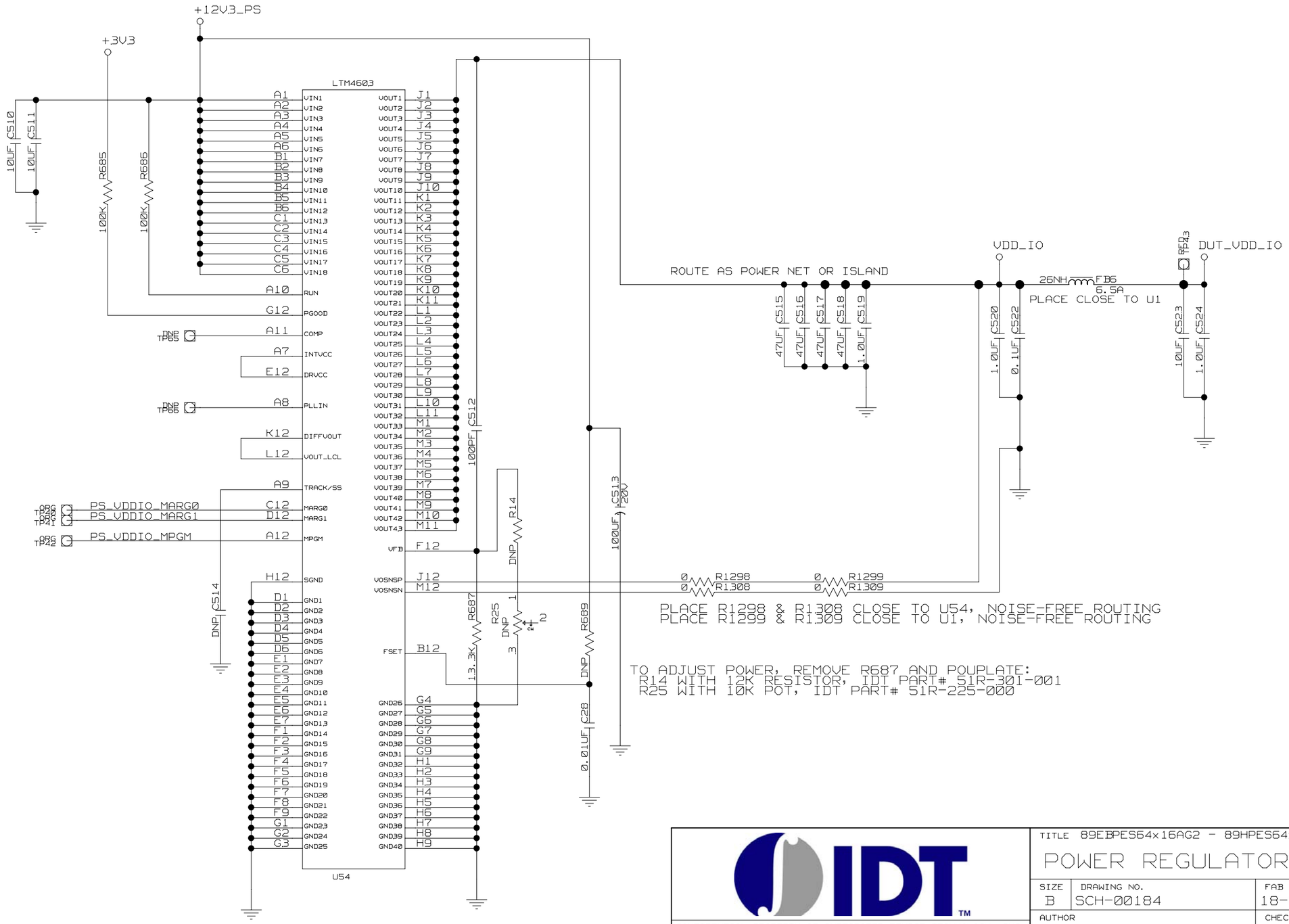

CONFIDENTIAL PROPERTY OF INTEGRATED DEVICE TECHNOLOGY, INC.
6024 SILVER CREEK VALLEY ROAD. SAN JOSE, CA 95138
COPYRIGHT (C)2009 IDT

TITLE 89EBPES64x16AG2 - 89HPES64x16AG2 Eval. Board			
POWER REGULATOR - VDDIO			
SIZE B	DRAWING NO. SCH-00184	FAB P/N 18-689-000	REV. 1.0
AUTHOR T. Tran		CHECKED BY D. Huang	
Thu Jan 29 15:54:01 2009		SHEET 39 OF 51	

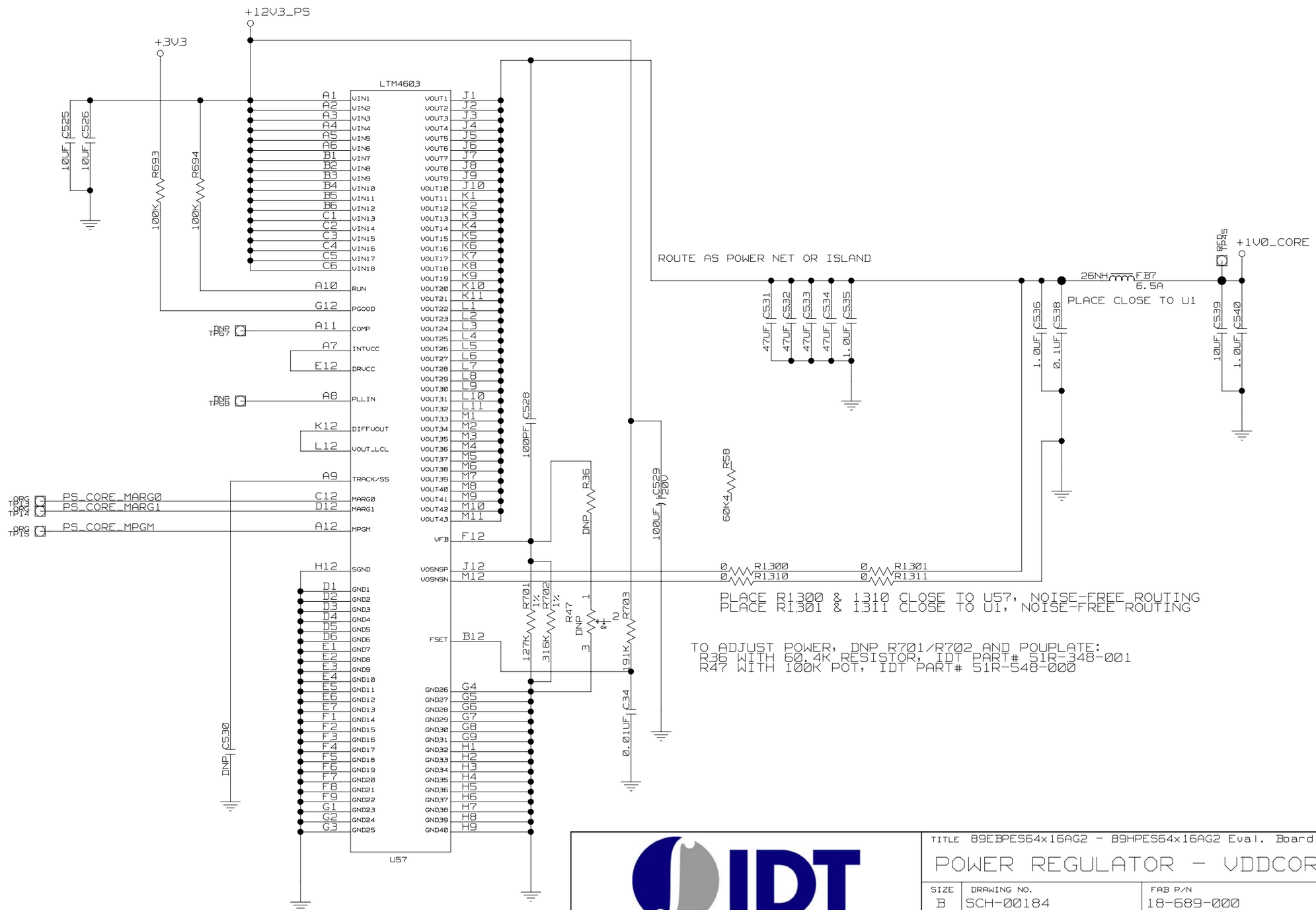

CONFIDENTIAL PROPERTY OF INTEGRATED DEVICE TECHNOLOGY, INC.
6024 SILVER CREEK VALLEY ROAD. SAN JOSE, CA 95138
COPYRIGHT (C)2009 IDT

TITLE 89EBPES64x16AG2 - 89HPES64x16AG2 Eval. Board			
POWER REGULATOR - VDDCORE			
SIZE B	DRAWING NO. SCH-00184	FAB P/N 18-689-000	REV. 1.0
AUTHOR T. Tran		CHECKED BY D. Huang	
Thu Jan 29 15:54:02 2009		SHEET 40 OF 51	

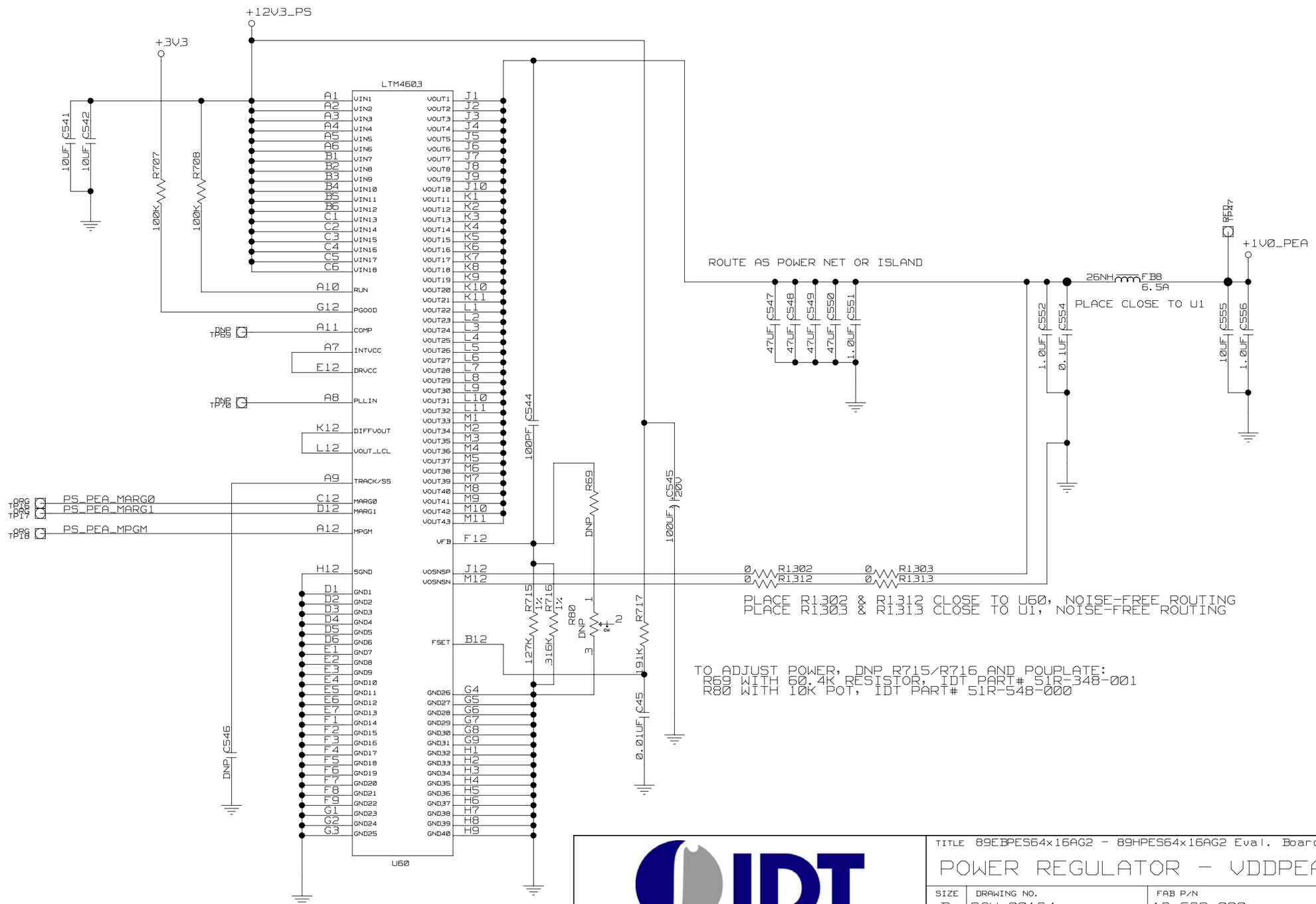

CONFIDENTIAL PROPERTY OF INTEGRATED DEVICE TECHNOLOGY, INC.
6024 SILVER CREEK VALLEY ROAD. SAN JOSE, CA 95138
COPYRIGHT (C)2009 IDT

TITLE 89EBPES64x16AG2 - 89HPES64x16AG2 Eval. Board

POWER REGULATOR - VDDPEA

SIZE	DRAWING NO.	FAB P/N	REV.
B	SCH-00184	18-689-000	1.0

AUTHOR	CHECKED BY
T. Tran	D. Huang

Thu Jan 29 15:54:02 2009

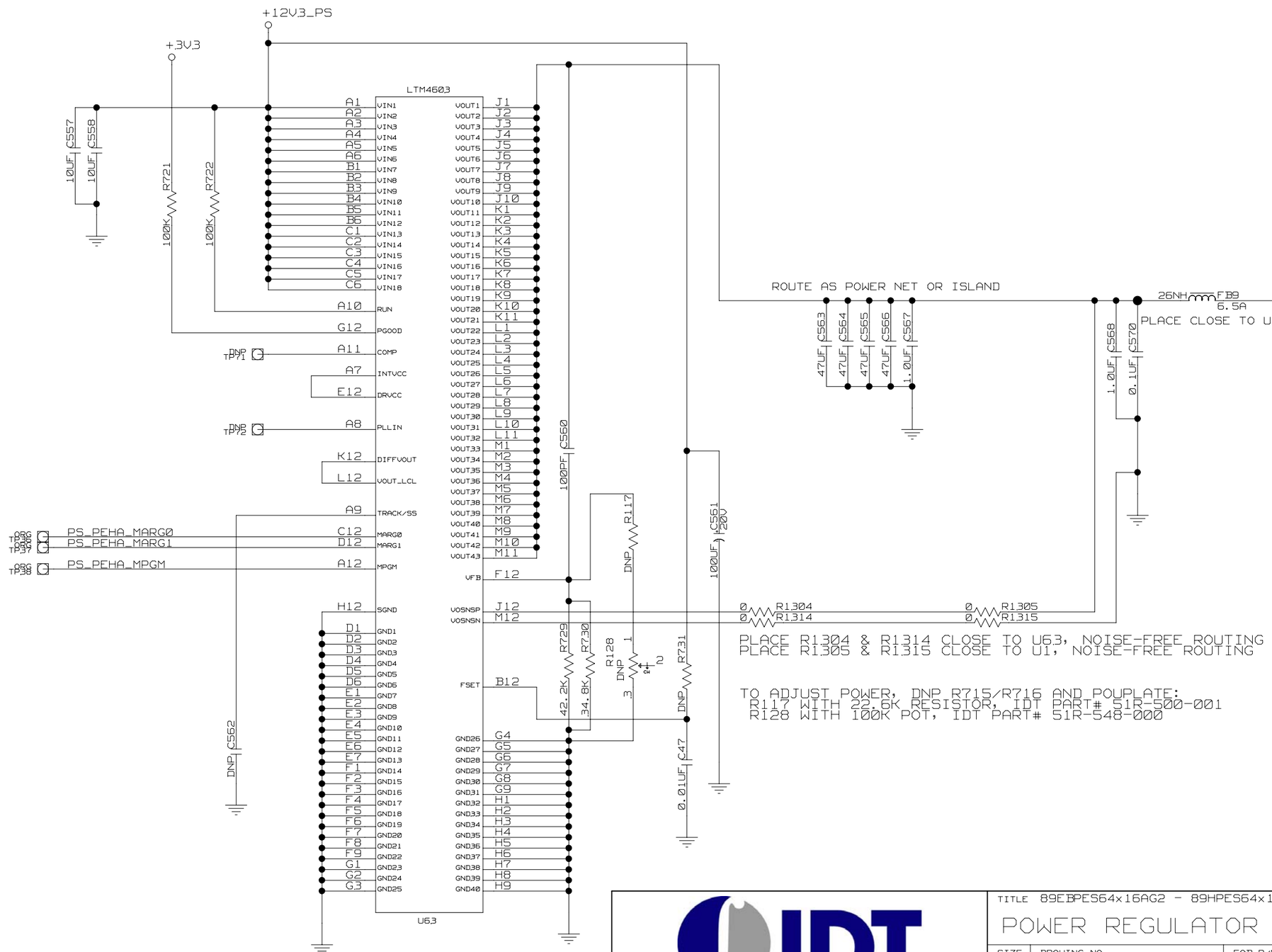

IDT™

CONFIDENTIAL PROPERTY OF INTEGRATED DEVICE TECHNOLOGY, INC.
6024 SILVER CREEK VALLEY ROAD. SAN JOSE, CA 95138
COPYRIGHT (C)2009 IDT

TITLE 89EBPES64x16AG2 - 89HPES64x16AG2 Eval. Board			
POWER REGULATOR - VDDPEHA			
SIZE B	DRAWING NO. SCH-00184	FAB P/N 18-689-000	REV. 1.0
AUTHOR T. Tran		CHECKED BY D. Huang	
Thu Jan 29 15:54:03 2009		SHEET 42 OF 51	

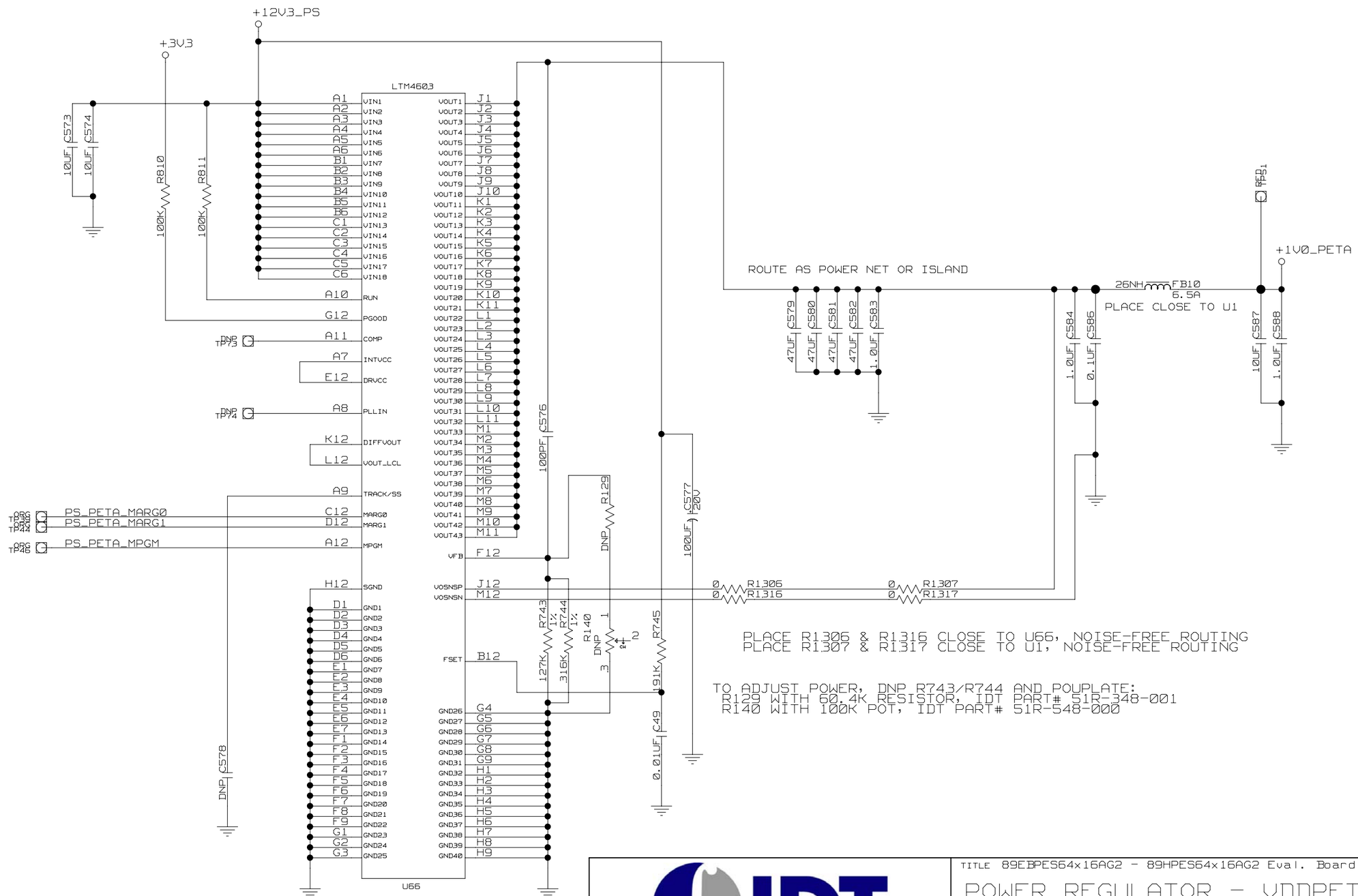

CONFIDENTIAL PROPERTY OF INTEGRATED DEVICE TECHNOLOGY, INC.
6024 SILVER CREEK VALLEY ROAD. SAN JOSE, CA 95138
COPYRIGHT (C)2009 IDT

TITLE 89EBPES64x16AG2 - 89HPES64x16AG2 Eval. Board

POWER REGULATOR - VDDPETA

SIZE	DRAWING NO.	FAB P/N	REV.
B	SCH-00184	18-689-000	1.0

AUTHOR	CHECKED BY
T. Tran	D. Huang

Thu Jan 29 15:54:04 2009 — SHEET 43 OF 51

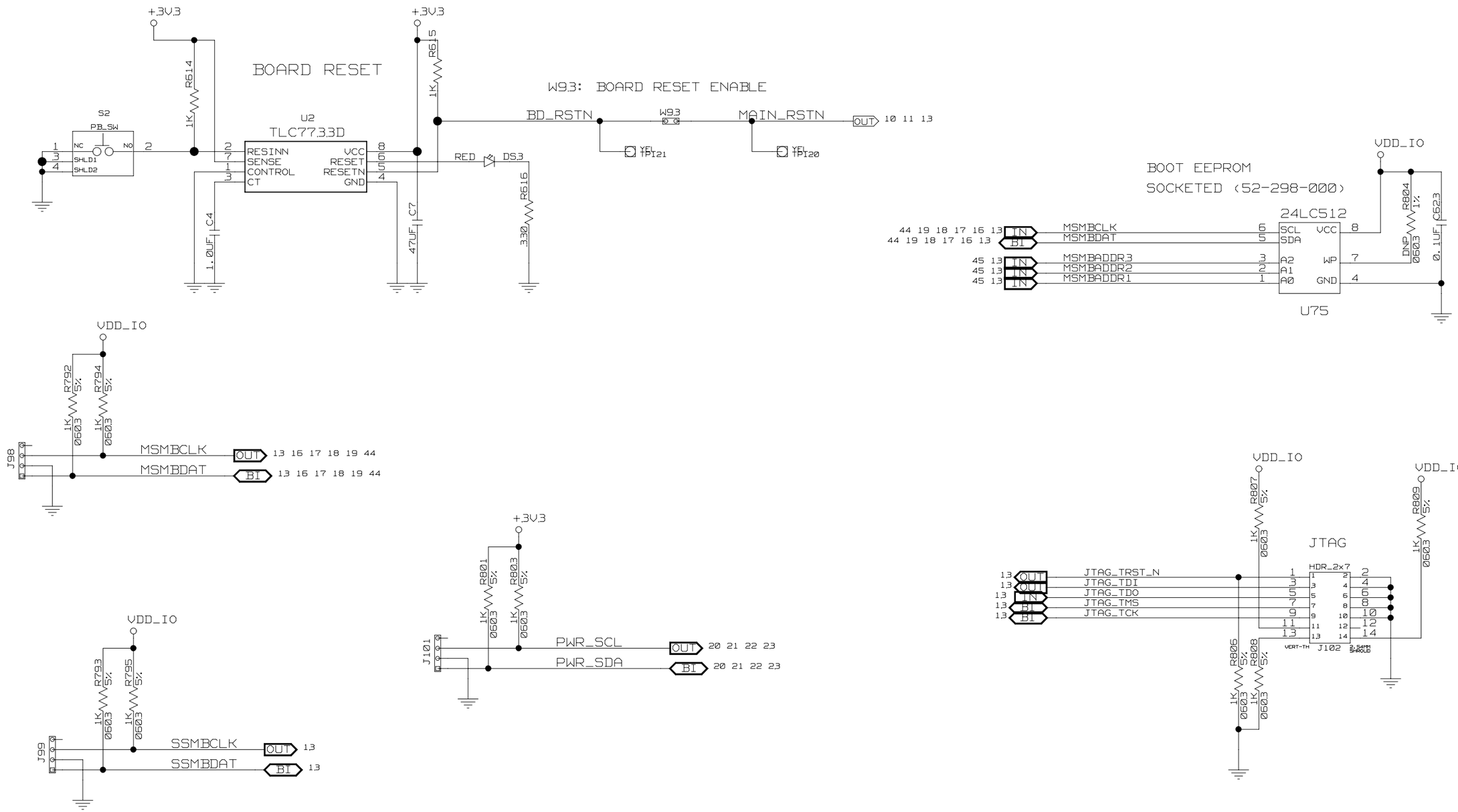

CONFIDENTIAL PROPERTY OF INTEGRATED DEVICE TECHNOLOGY, INC.
6024 SILVER CREEK VALLEY ROAD. SAN JOSE, CA 95138
COPYRIGHT (C)2009 IDT

TITLE 89EBPES64x16AG2 - 89HPES64x16AG2 Eval. Board			
RESET, SMBUS, EEPROM, JTAG			
SIZE B	DRAWING NO. SCH-00184	FAB P/N 18-689-000	REV. 1.0
AUTHOR T. Tran		CHECKED BY D. Huang	
Thu Jan 29 15:54:05 2009		SHEET 44 OF 51	

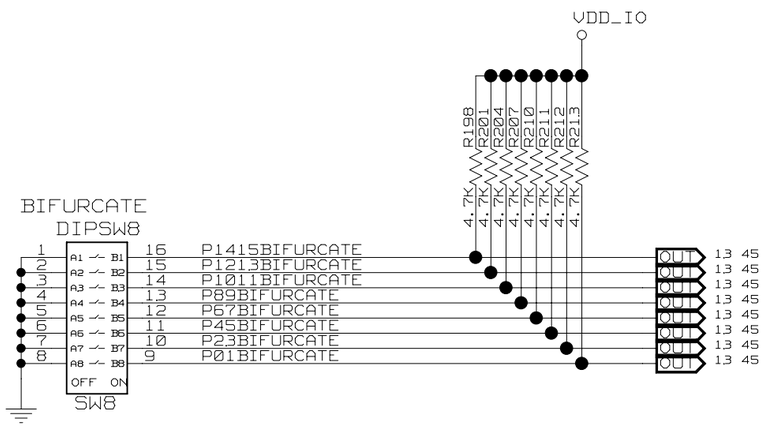

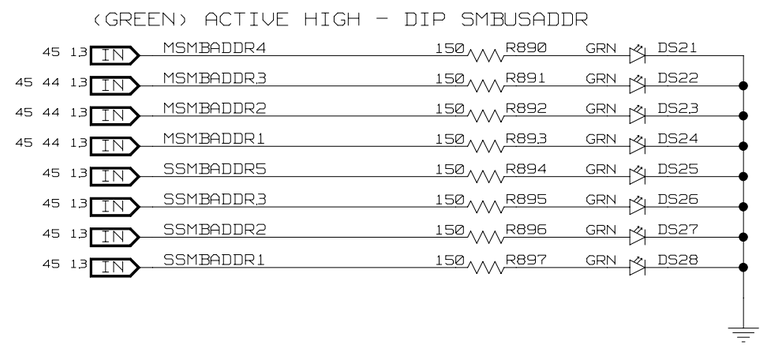

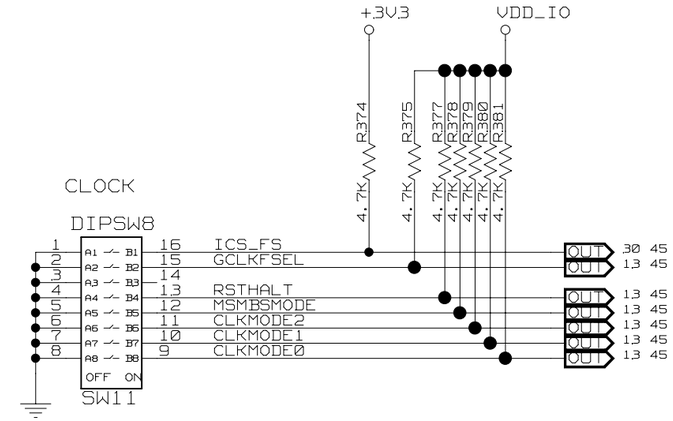

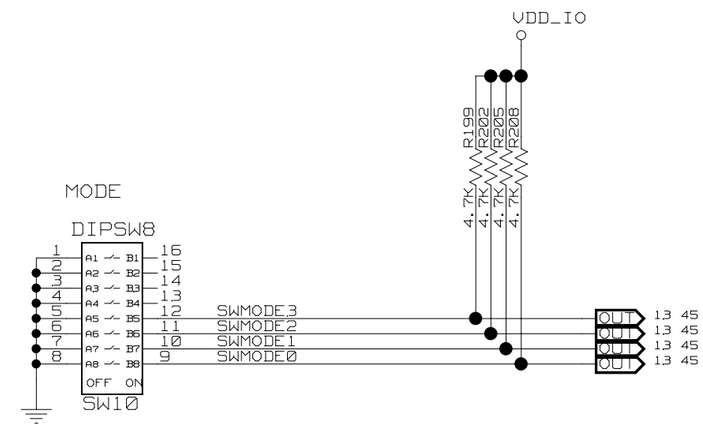

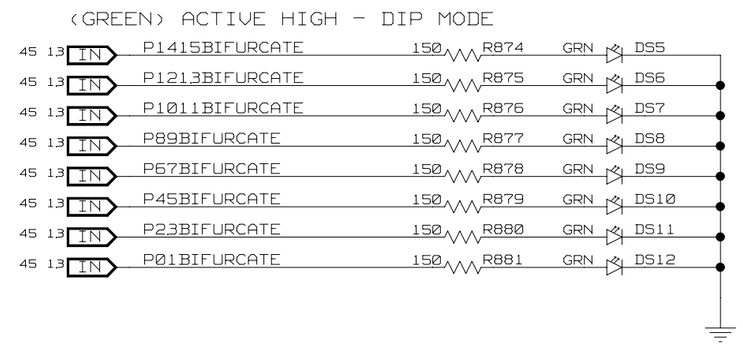

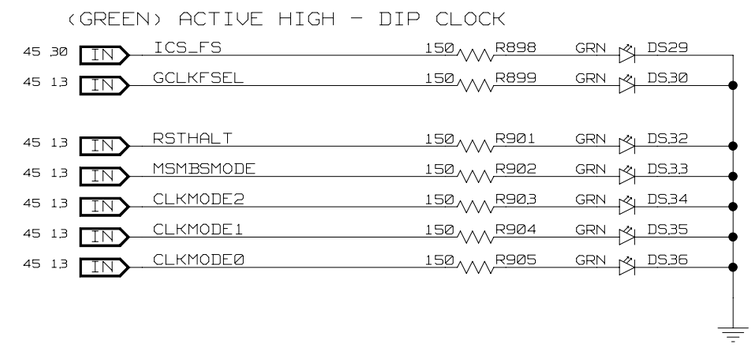

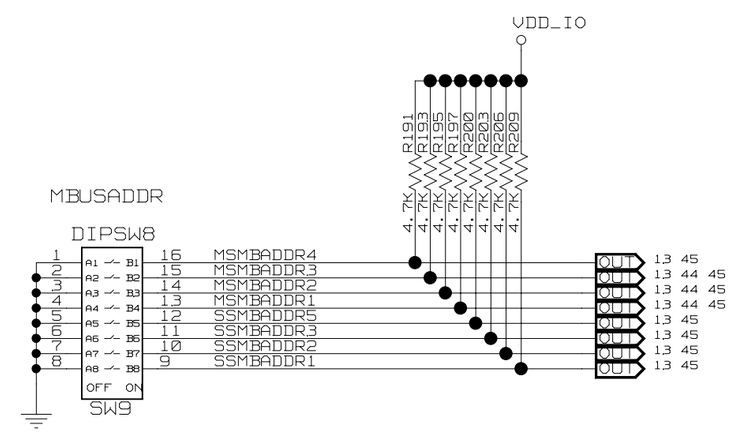

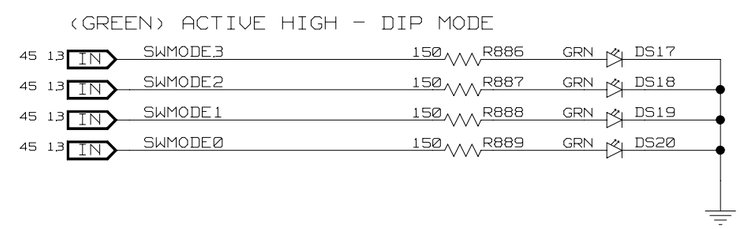

CONFIDENTIAL PROPERTY OF INTEGRATED DEVICE TECHNOLOGY, INC.
6024 SILVER CREEK VALLEY ROAD. SAN JOSE, CA 95138
COPYRIGHT (C)2009 IDT

TITLE 89EBPES64x16AG2 - 89HPES64x16AG2 Eval. Board			
DIP SWITCHES			
SIZE B	DRAWING NO. SCH-00184	FAB P/N 18-689-000	REV. 1.0
AUTHOR T. Tran		CHECKED BY D. Huang	
Thu Jan 29 15:54:05 2009		SHEET 45 OF 51	

CONFIDENTIAL PROPERTY OF INTEGRATED DEVICE TECHNOLOGY, INC.
6024 SILVER CREEK VALLEY ROAD. SAN JOSE, CA 95138
COPYRIGHT (C)2009 IDT

TITLE 89EBPES64x16AG2 - 89HPES64x16AG2 Eval. Board

LED - GPIO

SIZE	DRAWING NO.	FAB P/N	REV.
B	SCH-00184	18-689-000	1.0

AUTHOR	CHECKED BY
T. Tran	D. Huang

Thu Jan 29 15:54:06 2009 SHEET 46 OF 51

VDD_IO

(GREEN) ACTIVE LOW - ATTENTION INPUT

17	IN	P15_APN	1K	R980	DS111	ORG	PORT 15
17	IN	P14_APN	1K	R981	DS112	ORG	PORT 14
17	IN	P13_APN	1K	R982	DS113	ORG	PORT 13
17	IN	P12_APN	1K	R983	DS114	ORG	PORT 12
17	IN	P11_APN	1K	R984	DS115	ORG	PORT 11
17	IN	P10_APN	1K	R985	DS116	ORG	PORT 10
17	IN	P9_APN	1K	R986	DS117	ORG	PORT 9
17	IN	P8_APN	1K	R987	DS118	ORG	PORT 8
16	IN	P7_APN	1K	R988	DS119	ORG	PORT 7
16	IN	P6_APN	1K	R989	DS120	ORG	PORT 6
16	IN	P5_APN	1K	R990	DS121	ORG	PORT 5
16	IN	P4_APN	1K	R991	DS122	ORG	PORT 4
16	IN	P3_APN	1K	R992	DS123	ORG	PORT 3
16	IN	P2_APN	1K	R993	DS124	ORG	PORT 2
16	IN	P1_APN	1K	R994	DS125	ORG	PORT 1
16	IN	P0_APN	1K	R995	DS126	ORG	PORT 0

(YELLOW) ACTIVE LOW - PRESENCE DETECT

17 9	IN	P15_PDN	150	R996	DS127	YEL	PORT 15
17 9	IN	P14_PDN	150	R997	DS128	YEL	PORT 14
17 8	IN	P13_PDN	150	R998	DS129	YEL	PORT 13
17 8	IN	P12_PDN	150	R999	DS130	YEL	PORT 12
17 7	IN	P11_PDN	150	R1000	DS131	YEL	PORT 11
17 7	IN	P10_PDN	150	R1001	DS132	YEL	PORT 10
17 6	IN	P9_PDN	150	R1002	DS133	YEL	PORT 9
17 6	IN	P8_PDN	150	R1003	DS134	YEL	PORT 8
16 5	IN	P7_PDN	150	R1004	DS135	YEL	PORT 7
16 5	IN	P6_PDN	150	R1005	DS136	YEL	PORT 6
16 4	IN	P5_PDN	150	R1006	DS137	YEL	PORT 5
16 4	IN	P4_PDN	150	R1007	DS138	YEL	PORT 4
16 3	IN	P3_PDN	150	R1008	DS139	YEL	PORT 3
16 3	IN	P2_PDN	150	R1009	DS140	YEL	PORT 2
16 2	IN	P1_PDN	150	R1010	DS141	YEL	PORT 1
16 2	IN	P0_PDN	150	R1011	DS142	YEL	PORT 0

VDD_IO

(RED) ACTIVE LOW - POWER FAULT

23 17	IN	P15_PFN	1K	R1012	DS143	RED	PORT 15
23 17	IN	P14_PFN	1K	R1013	DS144	RED	PORT 14
23 17	IN	P13_PFN	1K	R1014	DS145	RED	PORT 13
23 17	IN	P12_PFN	1K	R1015	DS146	RED	PORT 12
22 17	IN	P11_PFN	1K	R1016	DS147	RED	PORT 11
22 17	IN	P10_PFN	1K	R1017	DS148	RED	PORT 10
22 17	IN	P9_PFN	1K	R1018	DS149	RED	PORT 9
22 17	IN	P8_PFN	1K	R1019	DS150	RED	PORT 8
21 16	IN	P7_PFN	1K	R1020	DS151	RED	PORT 7
21 16	IN	P6_PFN	1K	R1021	DS152	RED	PORT 6
21 16	IN	P5_PFN	1K	R1022	DS153	RED	PORT 5
21 16	IN	P4_PFN	1K	R1023	DS154	RED	PORT 4
20 16	IN	P3_PFN	1K	R1024	DS155	RED	PORT 3
20 16	IN	P2_PFN	1K	R1025	DS156	RED	PORT 2
20 16	IN	P1_PFN	1K	R1026	DS157	RED	PORT 1
20 16	IN	P0_PFN	1K	R1027	DS158	RED	PORT 0

(GREEN) ACTIVE HIGH - POWER GOOD

32 23 22 17	IN	P15_PWRGDN	150	R1028	DS159	GRN	PORT 15
32 23 22 17	IN	P14_PWRGDN	150	R1029	DS160	GRN	PORT 14
32 23 22 17	IN	P13_PWRGDN	150	R1030	DS161	GRN	PORT 13
32 23 22 17	IN	P12_PWRGDN	150	R1031	DS162	GRN	PORT 12
32 22 17	IN	P11_PWRGDN	150	R1032	DS163	GRN	PORT 11
32 22 17	IN	P10_PWRGDN	150	R1033	DS164	GRN	PORT 10
32 22 17	IN	P9_PWRGDN	150	R1034	DS165	GRN	PORT 9
32 22 17	IN	P8_PWRGDN	150	R1035	DS166	GRN	PORT 8
31 21 20 16	IN	P7_PWRGDN	150	R1036	DS167	GRN	PORT 7
31 21 20 16	IN	P6_PWRGDN	150	R1037	DS168	GRN	PORT 6
31 21 20 16	IN	P5_PWRGDN	150	R1038	DS169	GRN	PORT 5
31 21 20 16	IN	P4_PWRGDN	150	R1039	DS170	GRN	PORT 4
31 20 16	IN	P3_PWRGDN	150	R1040	DS171	GRN	PORT 3
31 20 16	IN	P2_PWRGDN	150	R1041	DS172	GRN	PORT 2
31 20 16	IN	P1_PWRGDN	150	R1042	DS173	GRN	PORT 1
31 20 16	IN	P0_PWRGDN	150	R1043	DS174	GRN	PORT 0

CONFIDENTIAL PROPERTY OF INTEGRATED DEVICE TECHNOLOGY, INC.
6024 SILVER CREEK VALLEY ROAD. SAN JOSE, CA 95138
COPYRIGHT (C)2009 IDT

TITLE 89EBPES64x16AG2 - 89HPES64x16AG2 Eval. Board

LED - PORT STATUS (1 OF 4)

SIZE	DRAWING NO.	FAB P/N	REV.
B	SCH-00184	18-689-000	1.0

AUTHOR	CHECKED BY
T. Tran	D. Huang

Thu Jan 29 15:54:07 2009 | SHEET 47 OF 51

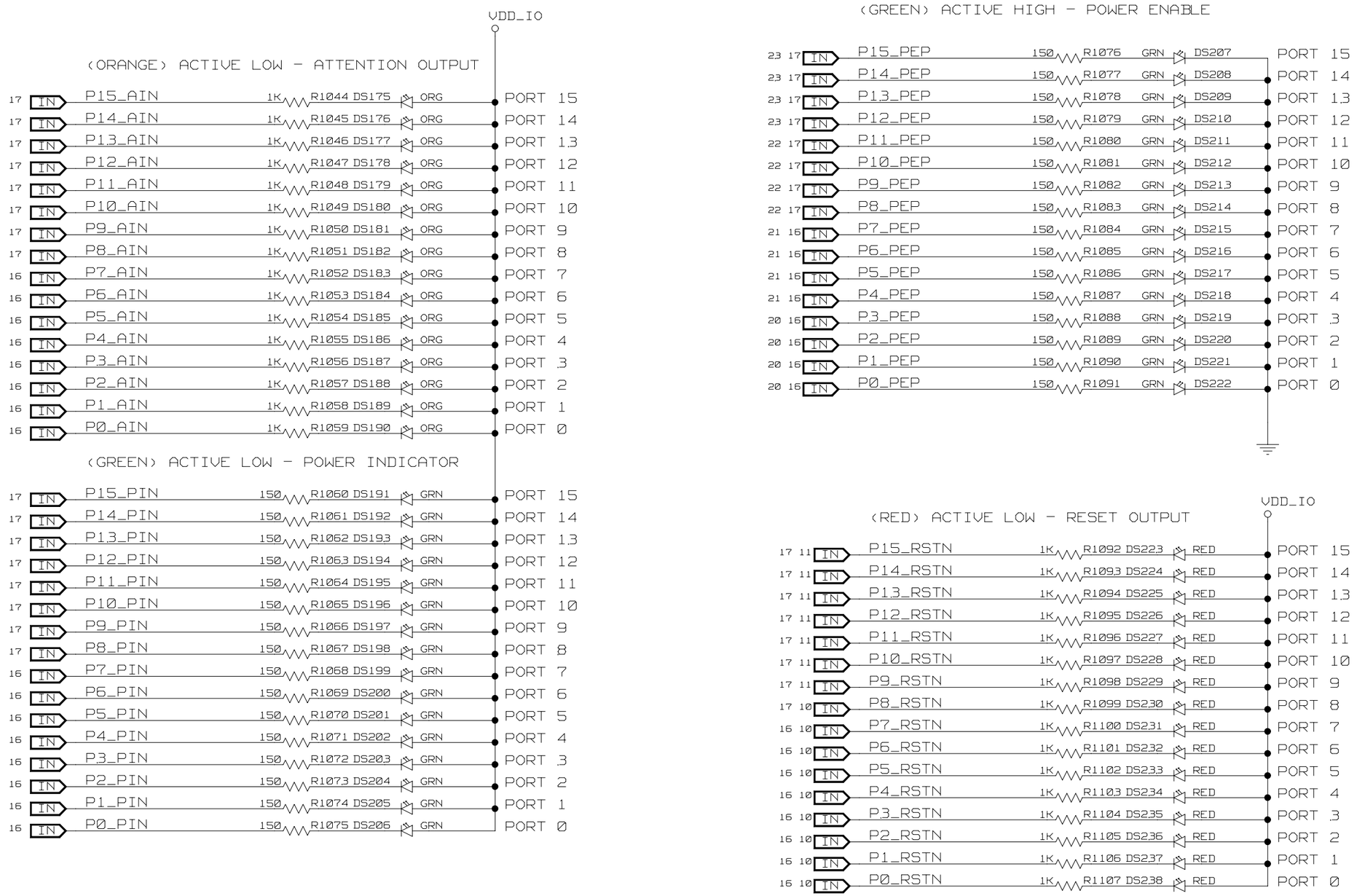

CONFIDENTIAL PROPERTY OF INTEGRATED DEVICE TECHNOLOGY, INC.
6024 SILVER CREEK VALLEY ROAD. SAN JOSE, CA 95138
COPYRIGHT (C)2009 IDT

TITLE 89EBPES64x16AG2 - 89HPES64x16AG2 Eval. Board

LED - PORT STATUS (2 OF 4)

SIZE	DRAWING NO.	FAB P/N	REV.
B	SCH-00184	18-689-000	1.0

AUTHOR	CHECKED BY
T. Tran	D. Huang

Thu Jan 29 15:54:08 2009 SHEET 48 OF 51

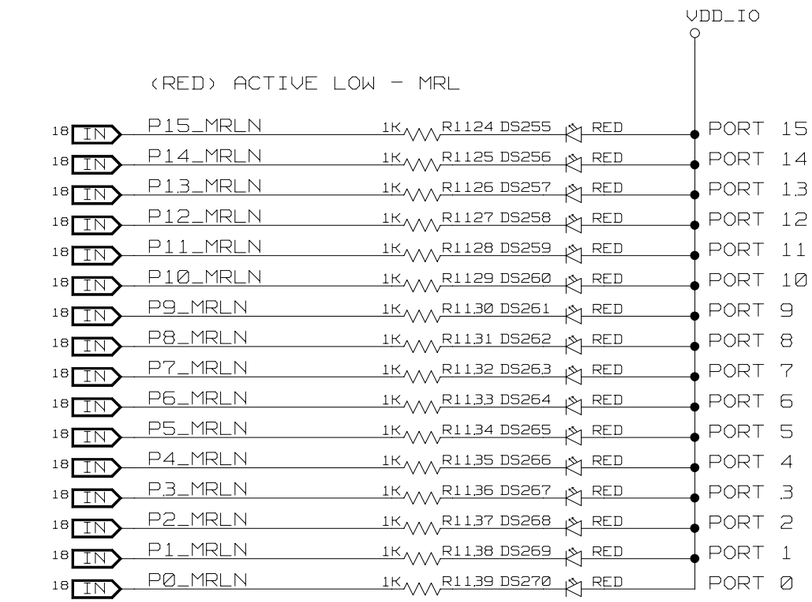

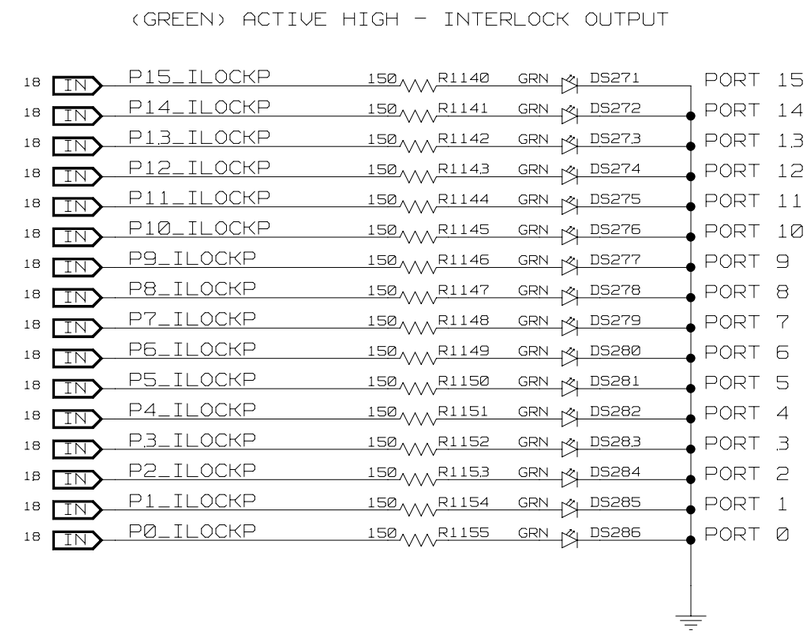

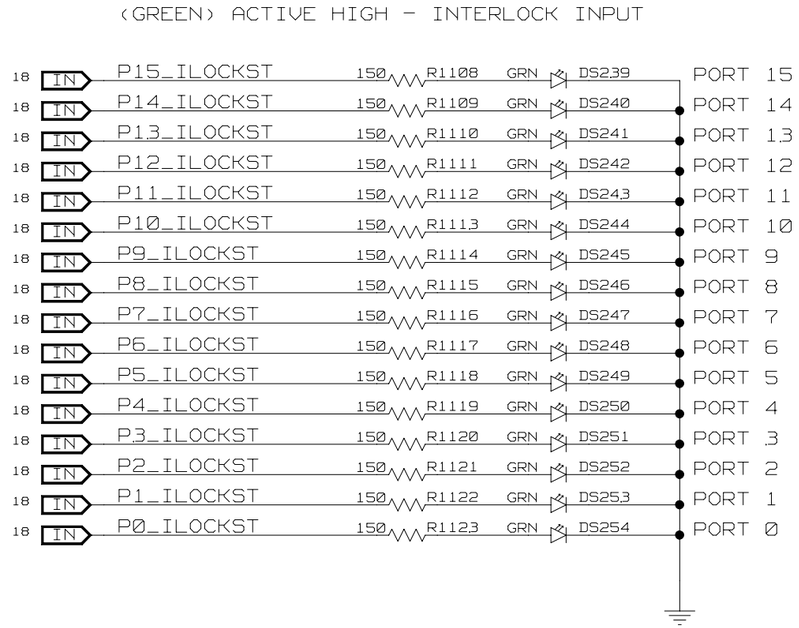

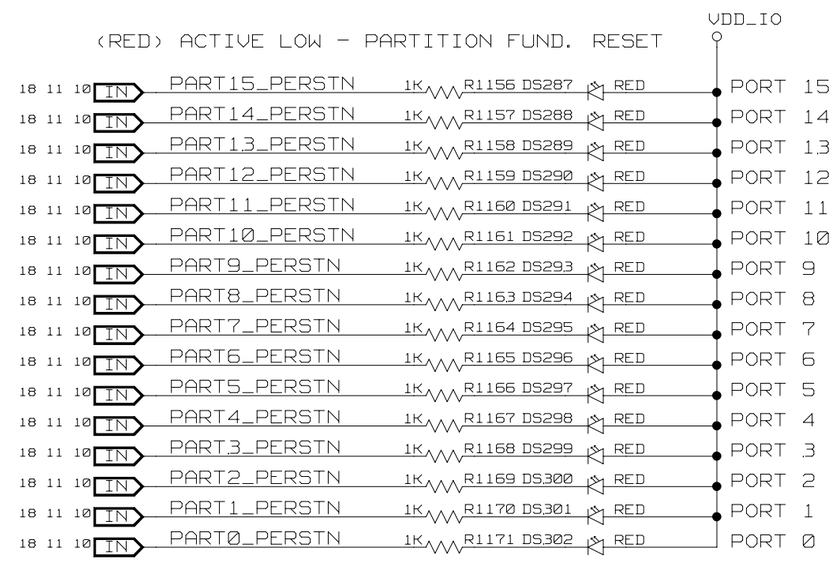

CONFIDENTIAL PROPERTY OF INTEGRATED DEVICE TECHNOLOGY, INC.
6024 SILVER CREEK VALLEY ROAD. SAN JOSE, CA 95138
COPYRIGHT (C)2009 IDT

TITLE 89EBPES64x16AG2 - 89HPES64x16AG2 Eval. Board

LED - PORT STATUS (3 OF 4)

SIZE	DRAWING NO.	FAB P/N	REV.
B	SCH-00184	18-689-000	1.0

AUTHOR	CHECKED BY
T. Tran	D. Huang

Thu Jan 29 15:54:09 2009 SHEET 49 OF 51

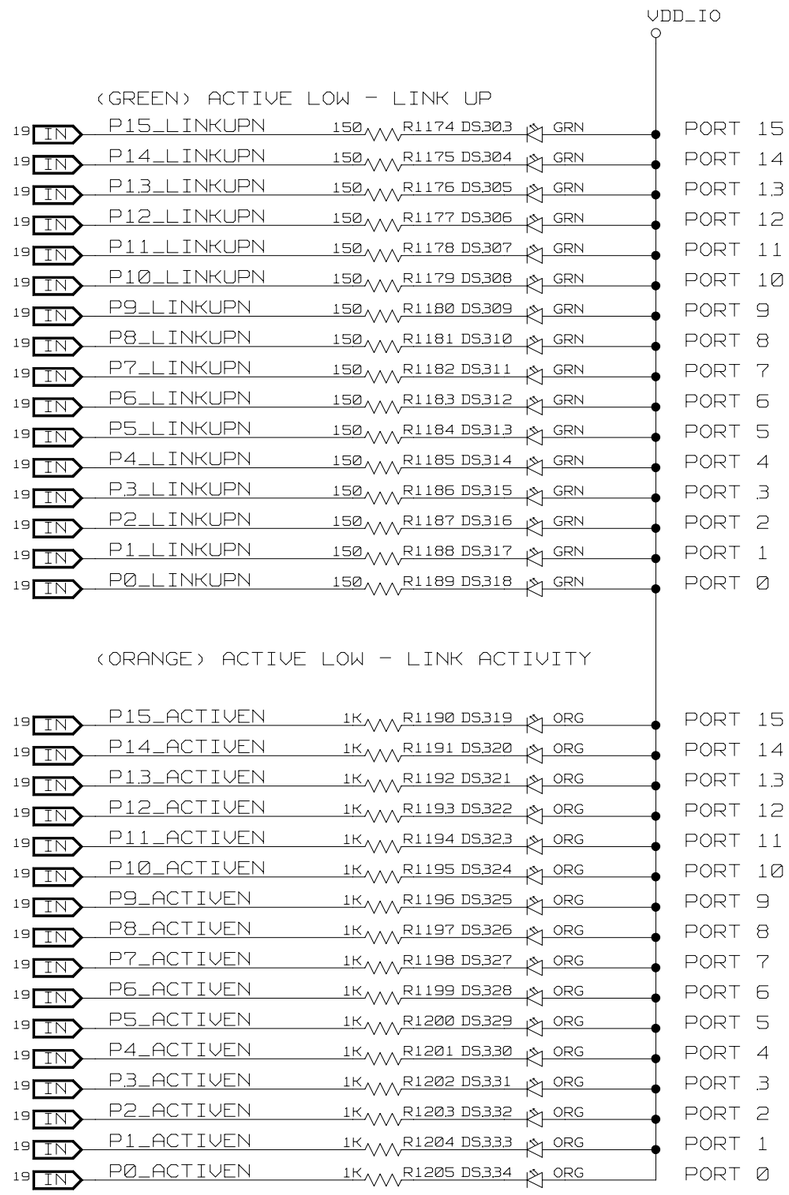

CONFIDENTIAL PROPERTY OF INTEGRATED DEVICE TECHNOLOGY, INC.
6024 SILVER CREEK VALLEY ROAD. SAN JOSE, CA 95138
COPYRIGHT (C)2009 IDT

TITLE 89EBPES64x16AG2 - 89HPES64x16AG2 Eval. Board

LED - PORT STATUS (4 OF 4)

SIZE	DRAWING NO.	FAB P/N	REV.
B	SCH-00184	18-689-000	1.0

AUTHOR	CHECKED BY
T. Tran	D. Huang

Thu Jan 29 15:54:10 2009 SHEET 50 OF 51

MINIMUM POWER SUPPLY LOADS

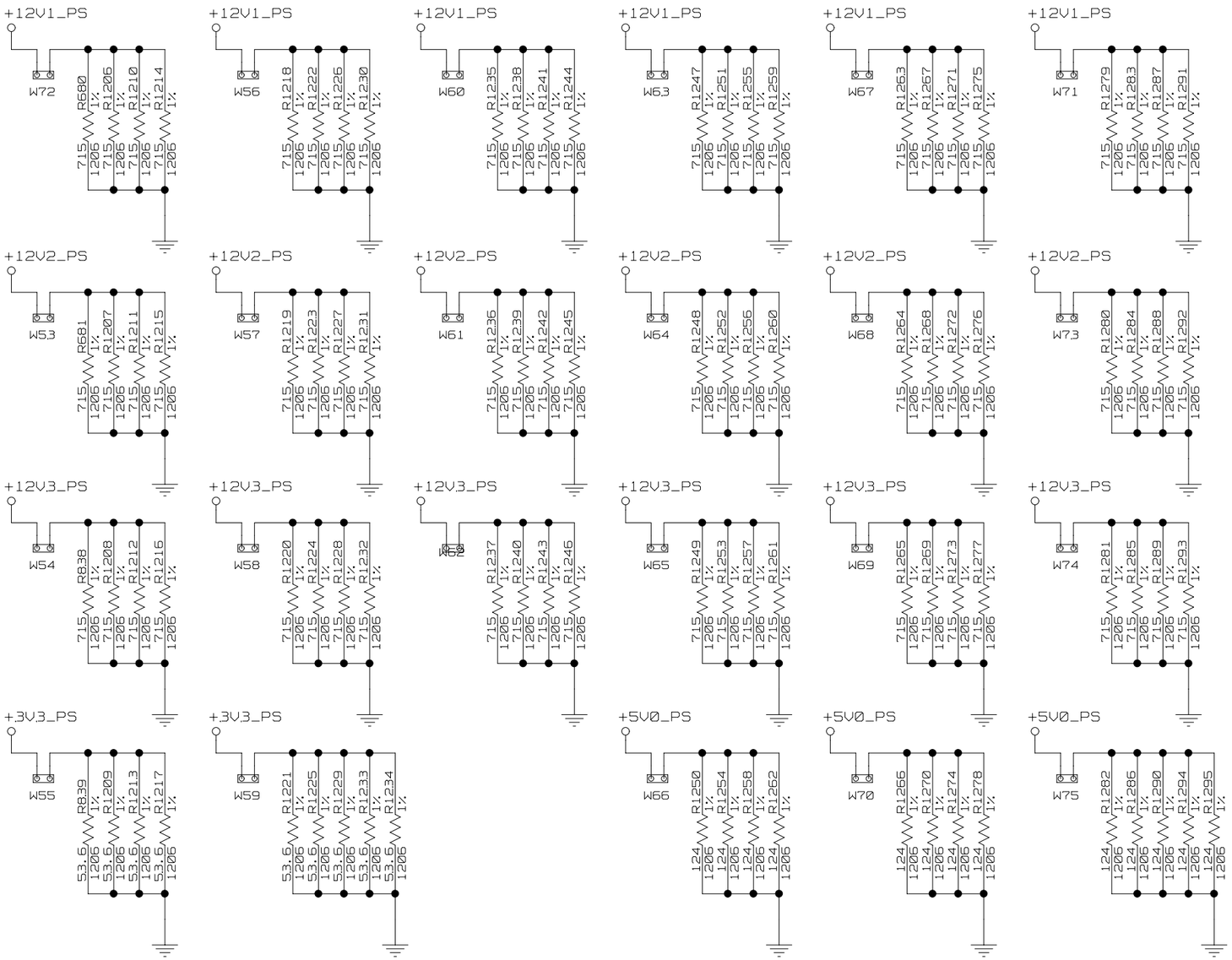

CONFIDENTIAL PROPERTY OF INTEGRATED DEVICE TECHNOLOGY, INC.
6024 SILVER CREEK VALLEY ROAD. SAN JOSE, CA 95138
COPYRIGHT (C)2009 IDT

TITLE 89EBPES64x16AG2 - 89HPES64x16AG2 Eval. Board

MIN LOAD RESISTORS

SIZE	DRAWING NO.	FAB P/N	REV.
B	SCH-00184	18-689-000	1.0

AUTHOR	CHECKED BY
T. Tran	D. Huang

Thu Jan 29 15:54:11 2009 SHEET 51 OF 51