Package Outline Drawing

Q80.12x12B

80 LEAD LOW PLASTIC QUAD FLATPACK PACKAGE (LQFP)

Rev 0, 3/11

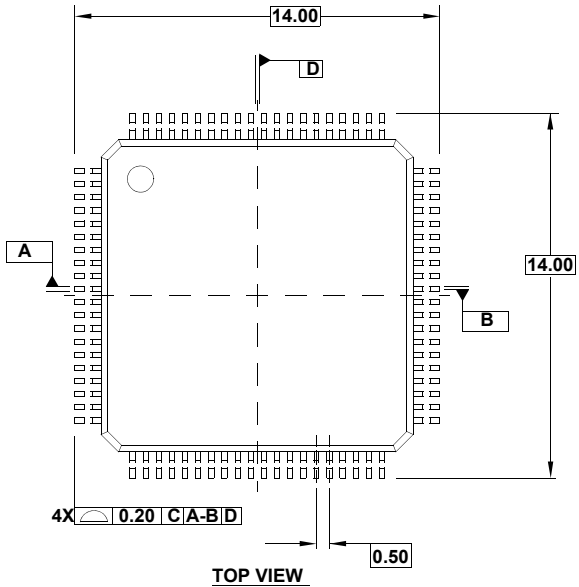

TOP VIEW

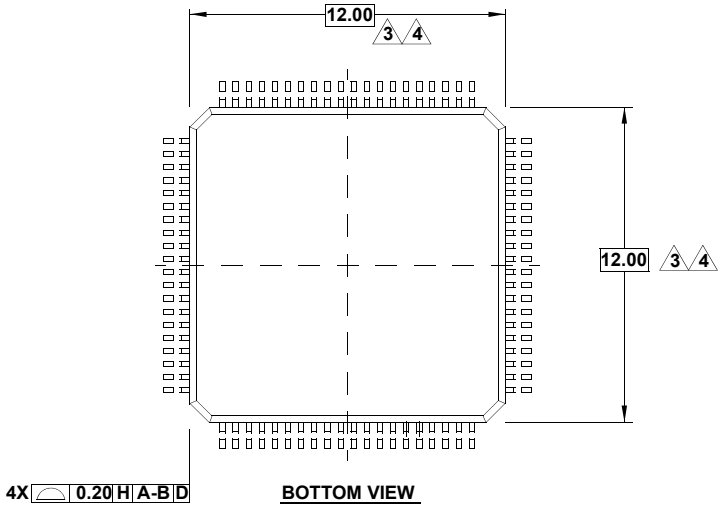

BOTTOM VIEW

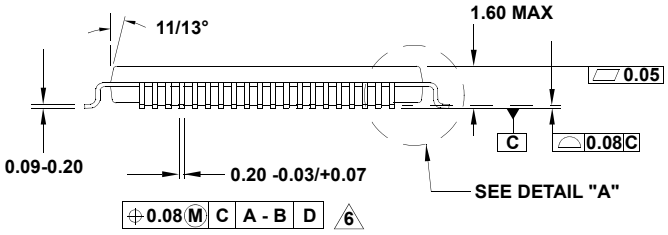

SIDE VIEW

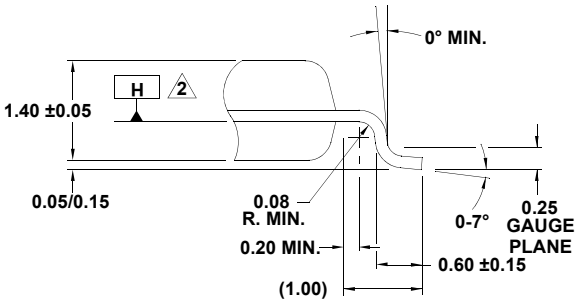

DETAIL "A"
SCALE: NONE

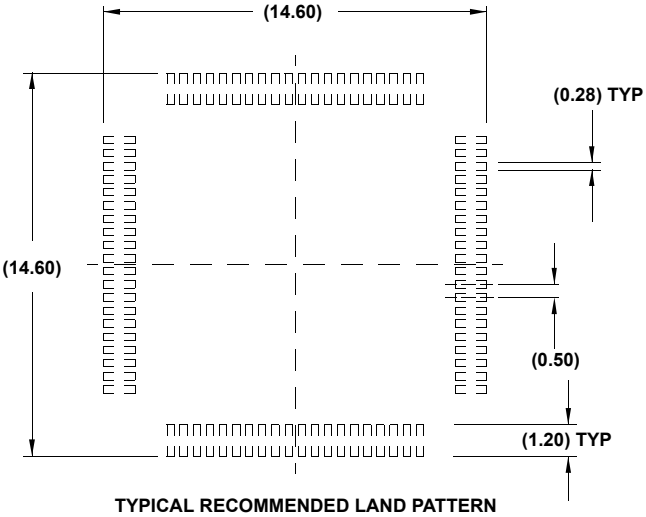

TYPICAL RECOMMENDED LAND PATTERN

NOTES:

1. All dimensioning and tolerancing conform to ANSI Y14.5-1982.
2. Datum plane H located at mold parting line and coincident with lead, where lead exits plastic body at bottom of parting line.
3. Dimensions do not include mold protrusion. Allowable mold protrusion is 0.25mm per side.
4. These dimensions to be determined at datum plane H.
5. Package top dimensions are smaller than bottom dimensions and top of package will not overhang bottom of package.
6. Does not include dambar protrusion. Allowable dambar protrusion shall be 0.08mm total in excess of the dimension at maximum material condition. Dambar cannot be located on the lower radius or the foot.
7. Controlling dimension: millimeter.
8. This outline conforms to JEDEC publication 95 registration MS-026, variation BDD.
9. Dimensions in ( ) are for reference only.