REVISIONS			
REV	DESCRIPTION	DATE	APPROVED
00	INITIAL RELEASE	10/10/11	D.P
01	COMBINE POD & LAND PATTERN	9/6/13	KS
02	ADD NOTE RECOMMENDED LAND PATTERN	2/21/14	J.H

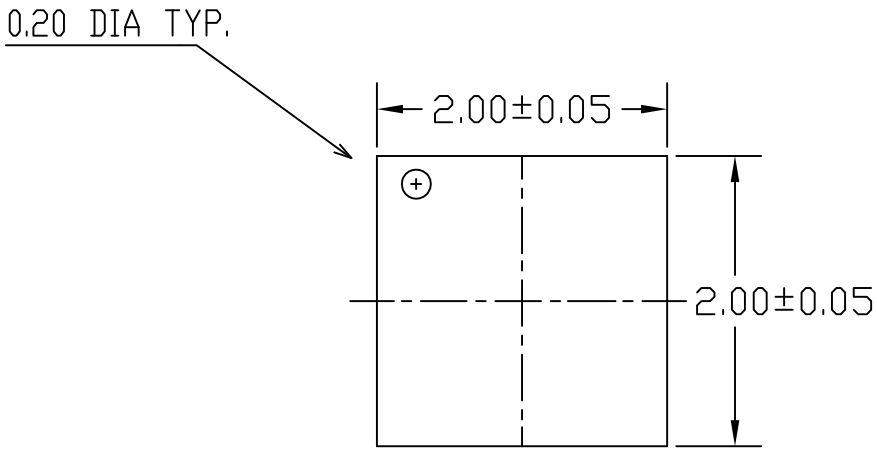

TOP VIEW

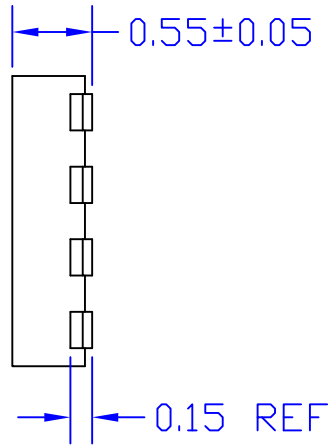

SIDE VIEW

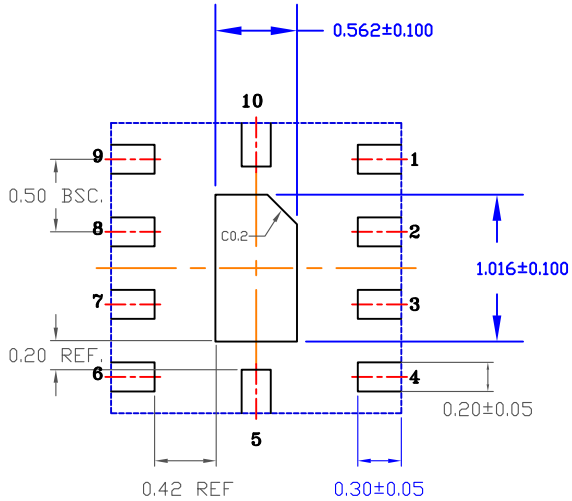

BOTTOM VIEW

TOLERANCES UNLESS SPECIFIED		IDT® www.IDT.com	6024 Silver Creek Valley Road San Jose CA 95138 PHONE: (408) 284-8200 FAX: (408) 284-8591	
DECIMAL X± XX± XXX±	ANGULAR ±1°			
APPROVALS	DATE	TITLE	NE/NEG10 PACKAGE OUTLINE 2.0 x 2.0 BODY, 0.55 THICK 0.50 mm PITCH VFQFPN	
DRAWN DP	09/05/11			
CHECKED				
		SIZE C	DRAWING No. PSC-4390	REV 02
		DO NOT SCALE DRAWING		SHEET 1 OF 2

REVISIONS			
REV	DESCRIPTION	DATE	APPROVED
00	INITIAL RELEASE	10/10/11	D.P
01	COMBINE POD & LAND PATTERN	9/6/13	KS
02	ADD NOTE RECOMMENDED LAND PATTERN	2/21/14	J.H

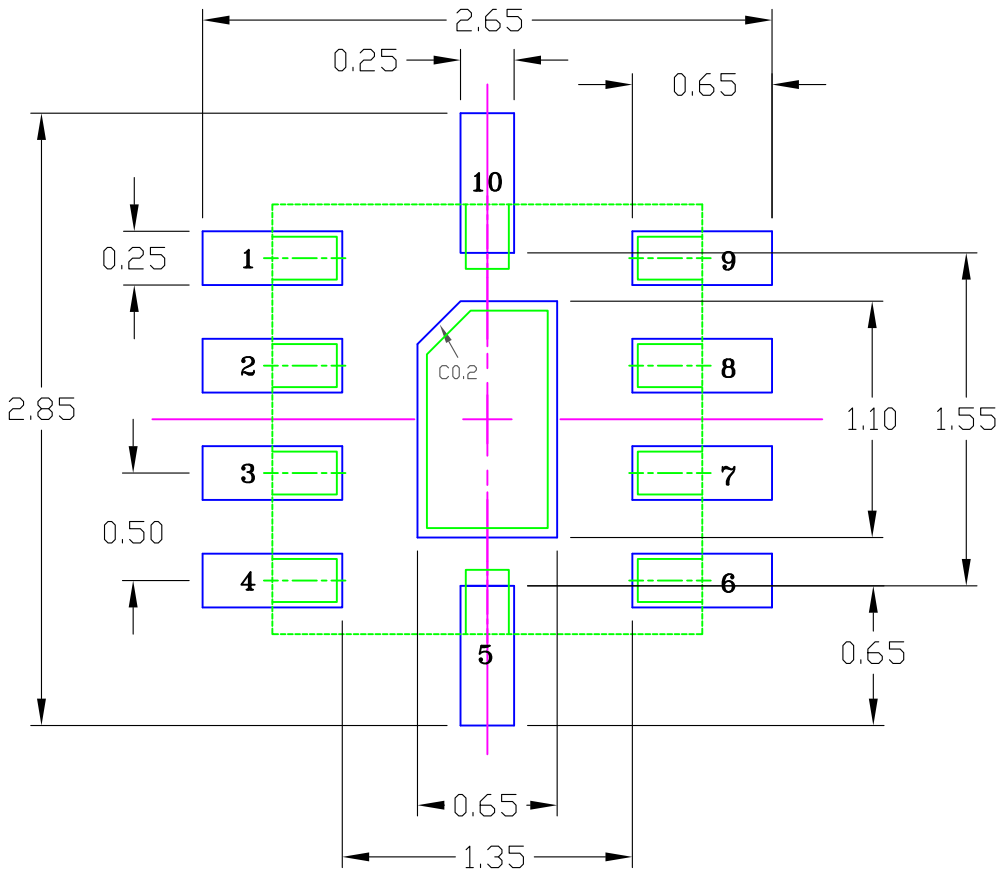

RECOMMENDED LAND PATTERN DIMENESION

NOTES:

1. ALL DIMENSION ARE IN mm. ANGLES IN DEGREES.
2. TOP DOWN VIEW. AS VIEWED ON PCB.
3. COMPONENT OUTLINE SHOW FOR REFERENCE IN GREEN.
4. LAND PATTERN IN BLUE. NSMD PATTERN ASSUMED.
5. LAND PATTERN RECOMMENDATION PER IPC-7351B GENERIC REQUIREMENT FOR SURFACE MOUNT DESIGN AND LAND PATTERN.

TOLERANCES UNLESS SPECIFIED
DECIMAL X± XX± XXX±
ANGULAR ±1°

IDT®
www.IDT.com

6024 Silver Creek Valley Road
San Jose CA 95138
PHONE: (408) 284-8200
FAX: (408) 284-8591

APPROVALS	DATE
DRAWN DP	09/05/11
CHECKED	

TITLE NE/NEG10 PACKAGE OUTLINE
2.0 x 2.0 BODY, 0.55 THICK
0.50 mm PITCH VFQFPN

SIZE	DRAWING No.	REV
C	PSC-4390	02

DO NOT SCALE DRAWING