Package Outline Drawing

L68.7X7

68 Lead Quad Flat No-Lead Plastic Package (QFN)
Rev 1, 4/2022

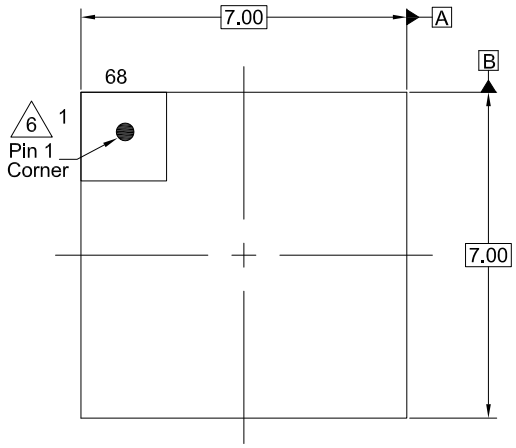

Top View

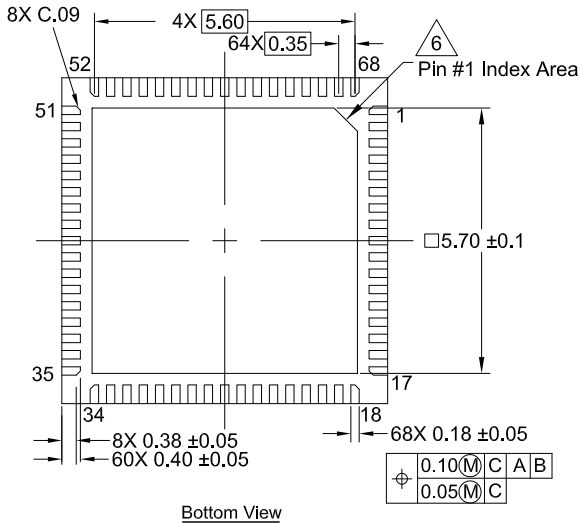

Bottom View

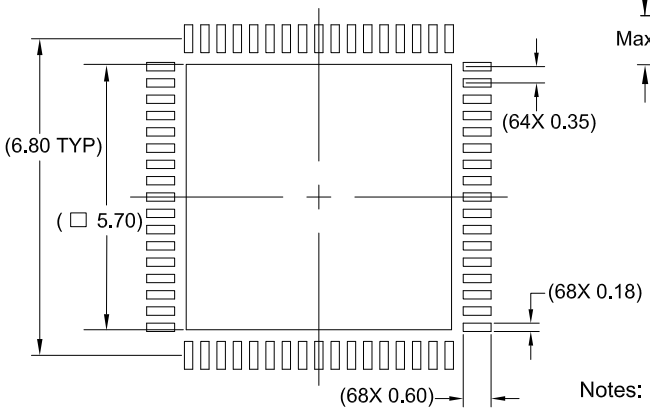

Typical Recommended Land Pattern

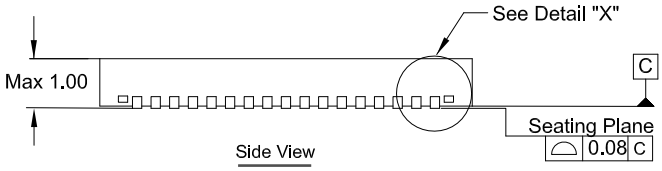

Side View

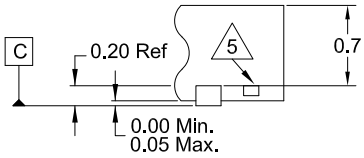

Detail "X"

Notes:

1. Dimensions are in millimeters.
   Dimensions in ( ) for reference Only.
2. Dimensioning and tolerancing conform to ASME14.5m-1994.
3. Unless otherwise specified, tolerance : Decimal ±0.05
4. Dimension b applies to the metallized terminal and is measured between 0.15mm and 0.30mm from the terminal tip.
5. Tiebar shown (if present) is a non-functional feature.
6. The configuration of the pin #1 identifier is optional, but must be located within the zone indicated. The pin #1 identifier may be either a mold or mark feature.