Package Outline Drawing

34 Lead Power Quad Flat No-Lead (PQFN) Plastic Package with Top Exposed Pad
POD Number: L34.4x6G, Revision No: 01, Date Created: Aug 28, 2024

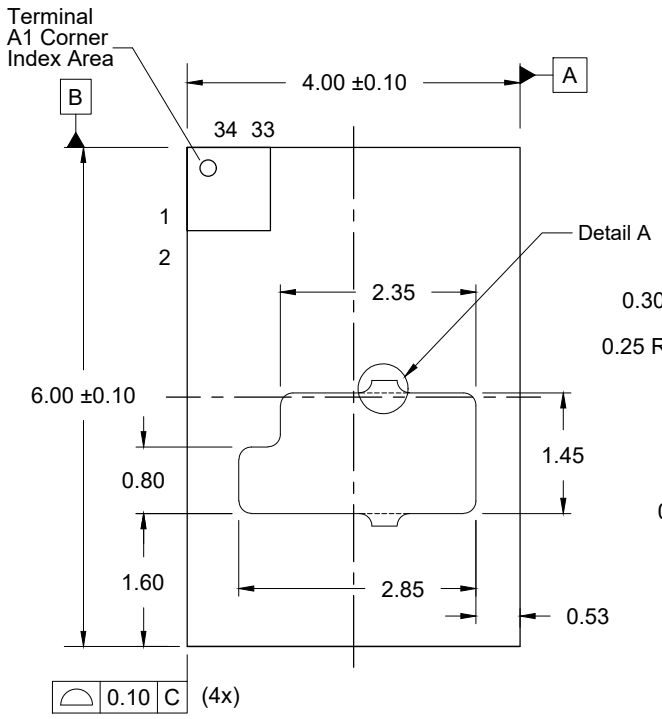

Top View

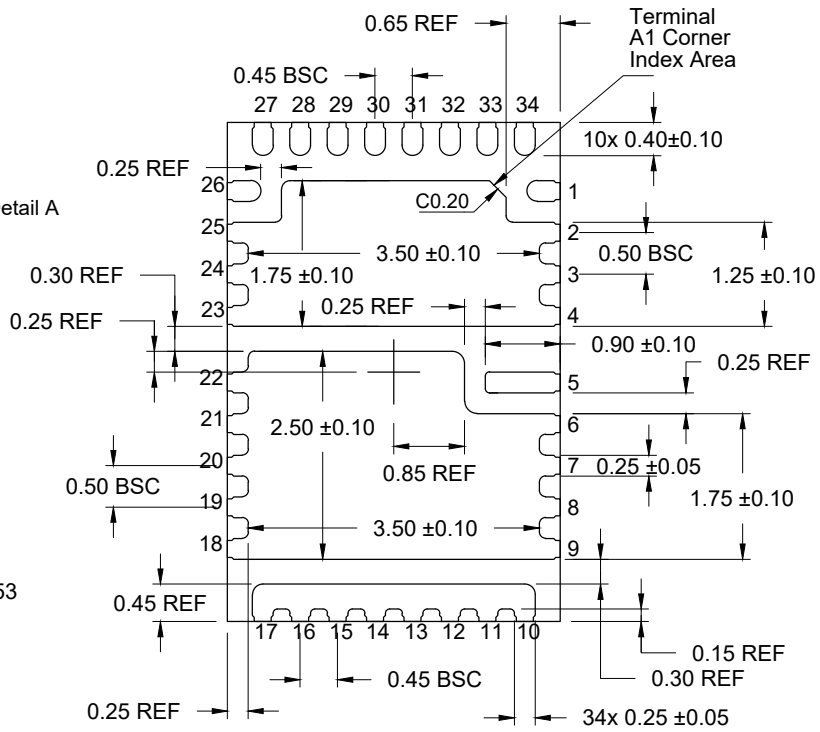

Bottom View

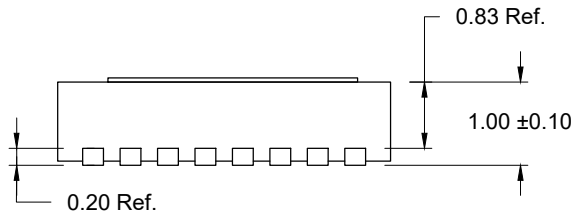

Side View

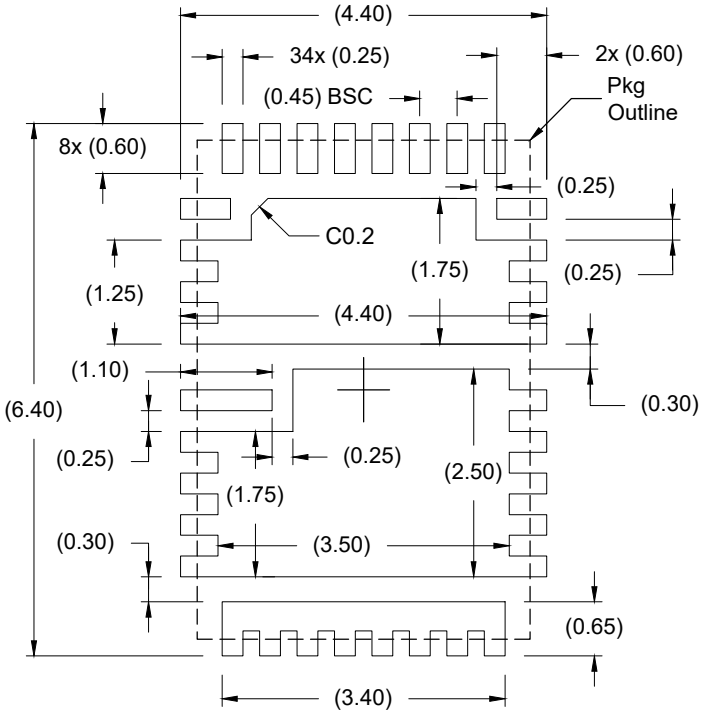

Recommended Land Pattern

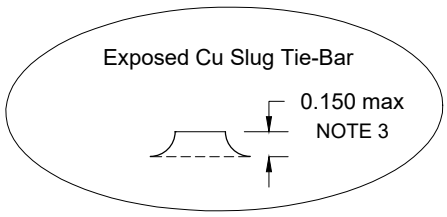

Detail A
SCALE: 2X

Notes:

1. Dimensioning and tolerancing conforms to ASME Y14.5M - 1994.
2. All dimensions are in millimeters. Dimensions in ( ) for reference only.
3. Copper slug tie-bar exposure range from 0.00mm ~ 0.150mm due to manufacturing variability.

© Renesas Electronics Corporation