Package Outline Drawing

L32.4x4F
32 Lead Quad Flat No-Lead (QFN) Plastic Package
Rev 0, 10/18

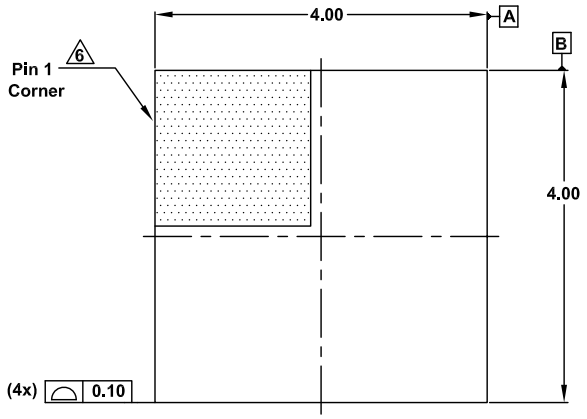

Top View

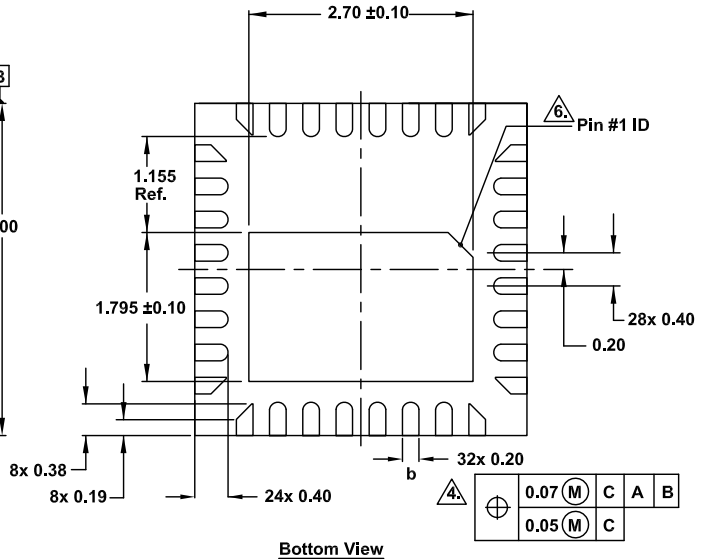

Bottom View

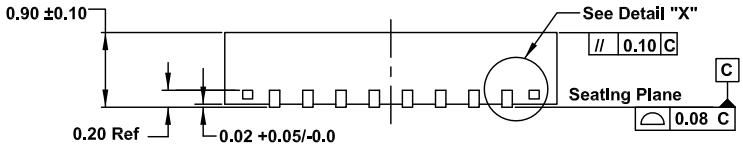

Side View

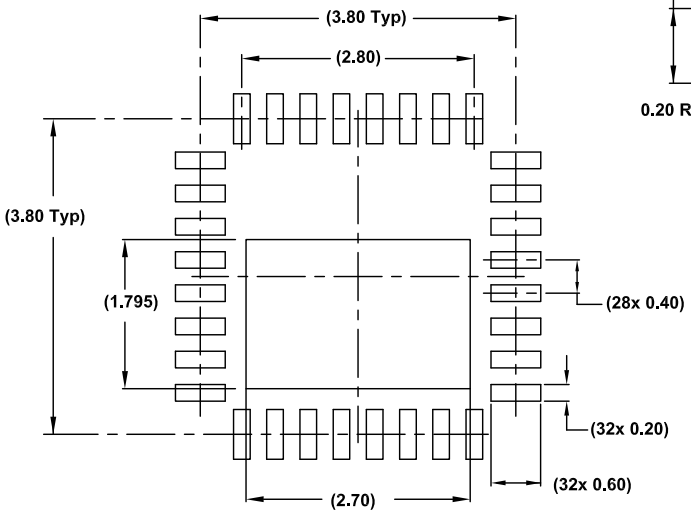

Typical Recommended Land Pattern

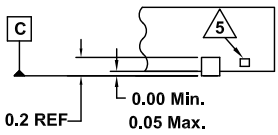

Detail "X"

Notes:

1. Dimensions are in millimeters.
   Dimensions in ( ) for Reference Only.
2. Dimensioning and tolerancing conform to ASME Y14.5m-1994.
3. Unless otherwise specified, tolerance : Decimal ±0.05.
4. This dimension applies to the metallized terminal and is measured between 0.15mm and 0.30mm from the terminal tip.
5. Tiebar shown (if present) is a non-functional feature.
6. The configuration of the pin #1 identifier is optional, but must be located within the zone indicated. The pin #1 identifier may be either a mold or mark feature.