20-SIP LGA, Package Outline Drawing

4.60 x 4.00 x 1.15 mm Body, 0.50mm Pitch

LTX20T1, PSC-4839-01, Rev 00, Page 1

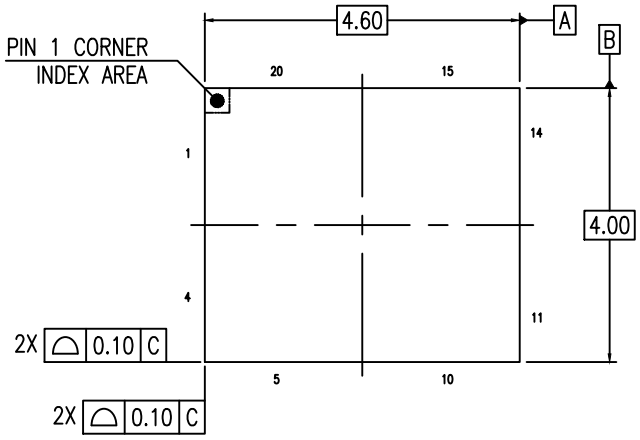

TOP VIEW

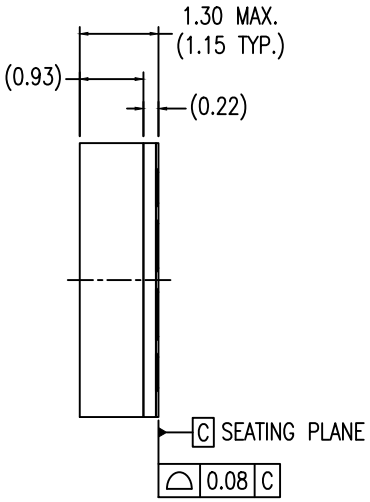

SIDE VIEW

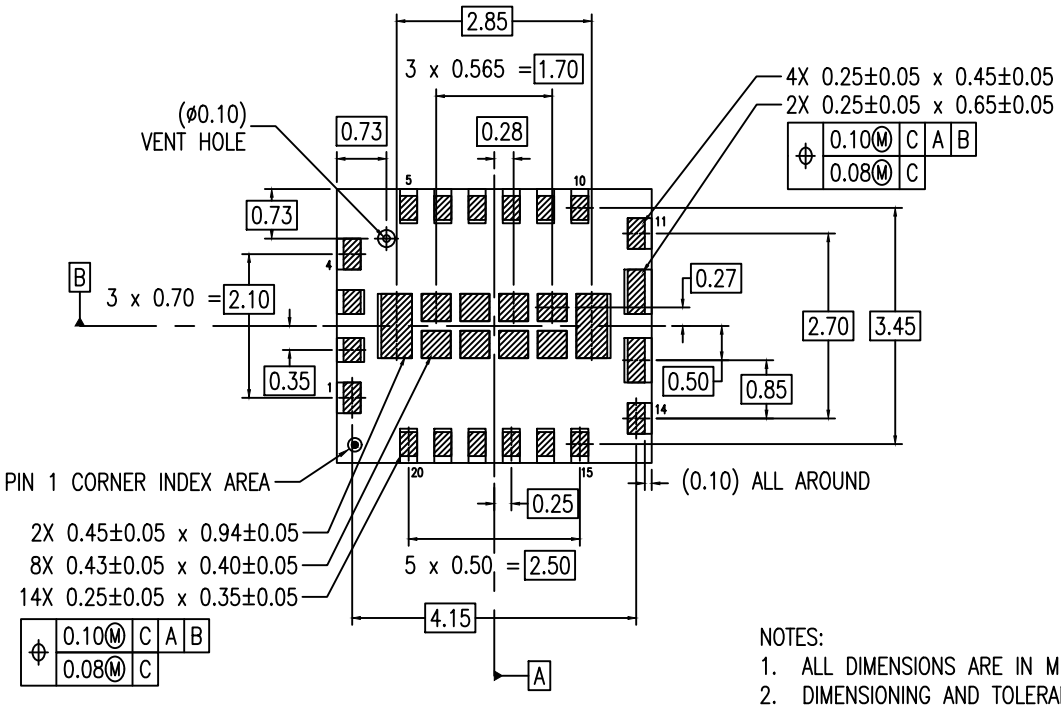

BOTTOM VIEW

NOTES:

1. ALL DIMENSIONS ARE IN MILLIMETERS
2. DIMENSIONING AND TOLERANCING PER ASME Y14.5M 2009
3. TOTAL THICKNESS DOES NOT INCLUDE SAW BURR

LEGEND:

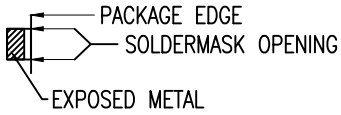

© Renesas Electronics Corporation

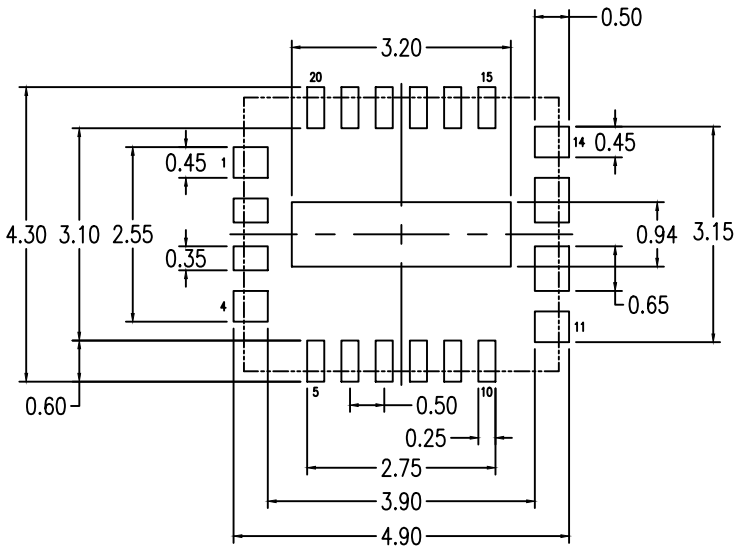

RECOMMENDED LAND PATTERN DIMENSION

NOTES:
1. ALL DIMENSION ARE IN MM. ANGLES IN DEGREES.
2. TOP DOWN VIEW. AS VIEWED ON PCB.
3. LAND PATTERN RECOMMENDATION PER IPC-7351B GENERIC REQUIREMENT FOR SURFACE MOUNT DESIGN AND LAND PATTERN.

Package Revision History		
Date Created	Rev No.	Description
Jan. 09, 2020	00	Initial release

© Renesas Electronics Corporation