89HP0608X 8-Channel 6.25Gbps XAUI Signal Repeater

FEATURES

- Compensates for cable and PCB trace attenuation and ISI jitter
- Programmable receiver equalization up to 30db
- Programmable de-emphasis up to -8.5dB
- Minimized in-out latency of 300ps typical
- Recovers data stream even when the differential signal eye is completely closed due to trace attenuation and ISI jitter
- Full XAUI protocol support
- Configurable via I²C interface
- Supports automatic download of configuration from external EEPROM with a single or multiple repeaters on I²C bus
- Leading edge power minimization in active and shutdown modes
- No external bias resistors or reference clocks required
- Channel mux mode, demux mode, 1 to 2 channels multicast, and Z-switch function mode
- Available in a 9x9mm 100-ball FPBGA package

Benefits

- Extends maximum cable length to over 10 meters or trace lengths to over 65 inches
- Speeds up system design time by minimizing signal integrity issues
- Minimizes BER for best system performance

Applications

- Telecommunications
- Networking
- 10GbE systems

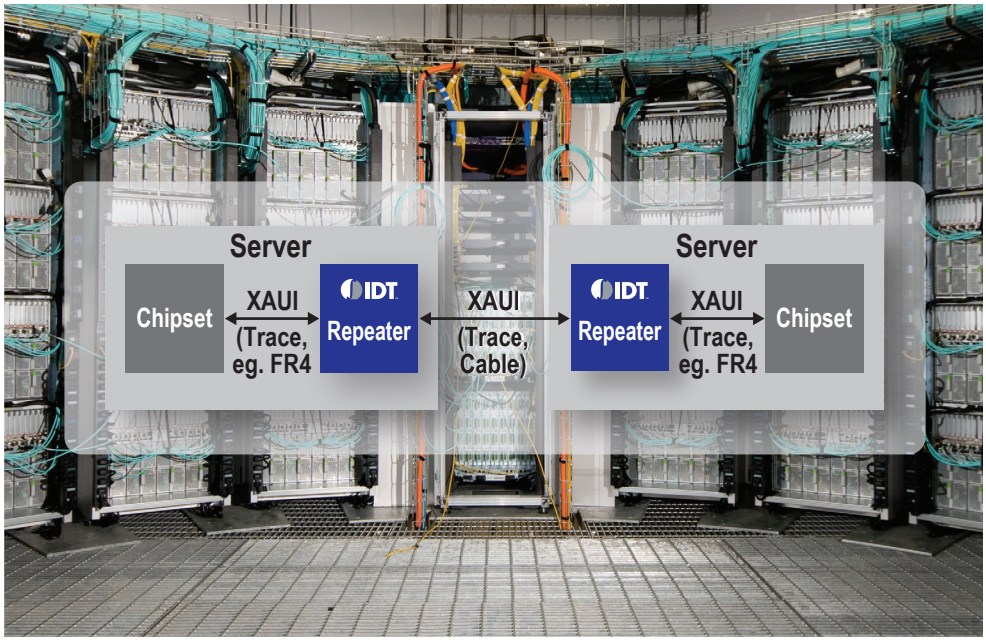

Device Overview

The IDT 89HP0608X is a 1.25Gbps to 6.25Gbps Repeater IC that reconditions high-speed serial data streams. The device features IDT EyeBoost™ technology that compensates for cable and board trace attenuations and ISI jitter, thereby extending connection reach. The device is optimized for XAUI high-speed, serial differential data streams and contains eight data channels, each able to process up to 6.25Gbps transmission rates. Each channel consists of an input equalizer and amplifier, signal detection with glitch filter, as well as programmable output swing, slew rate, and de-emphasis with delay control. Since all of these features are user programmable, they allow for application specific optimization.

Besides the per channel programmable features, the 89HP0608X provides global programmable settings - termination resistance values and transfer modes. The 89HP0608X, with its many programmable receiver and transmitter features, is ideal for applications using any combination of cables and board trace materials.

All modes of active data transfer are designed with minimized power consumption. Also, a wide selection of power reducing modes allows the user to eliminate power of unused blocks, including a shutdown mode. In full shutdown mode, the part consumes less than 80mW in worst case environmental conditions.

89HP0608X Block Diagram

The 89HP0608X contains eight high speed channels as shown in the block diagram below. Each channel can be routed to different outputs. Depending on user configuration via mode selections, input traffic can be muxed, demuxed, or looped back. Please, refer to modes of operation chapter for details. To facilitate buffering of system clocks, the repeater provides 1:2 clock buffer as shown in the diagram below. Powerdown (PDB) and Channel Enable (AEN0, etc.) pins are provided for easy state and channel control. Status output pins are available for monitoring critical states, such as the detection of high speed input signals (A0SIGDET, etc.).

Each channel's configuration and performance can be optimized via the I²C interface (SCL, SDA). The programming option allows the user to optimize the repeater's performance in a wide range of applications, making it an ideal solution for most applications requiring cancellation of trace or cable attenuation and ISI jitter.

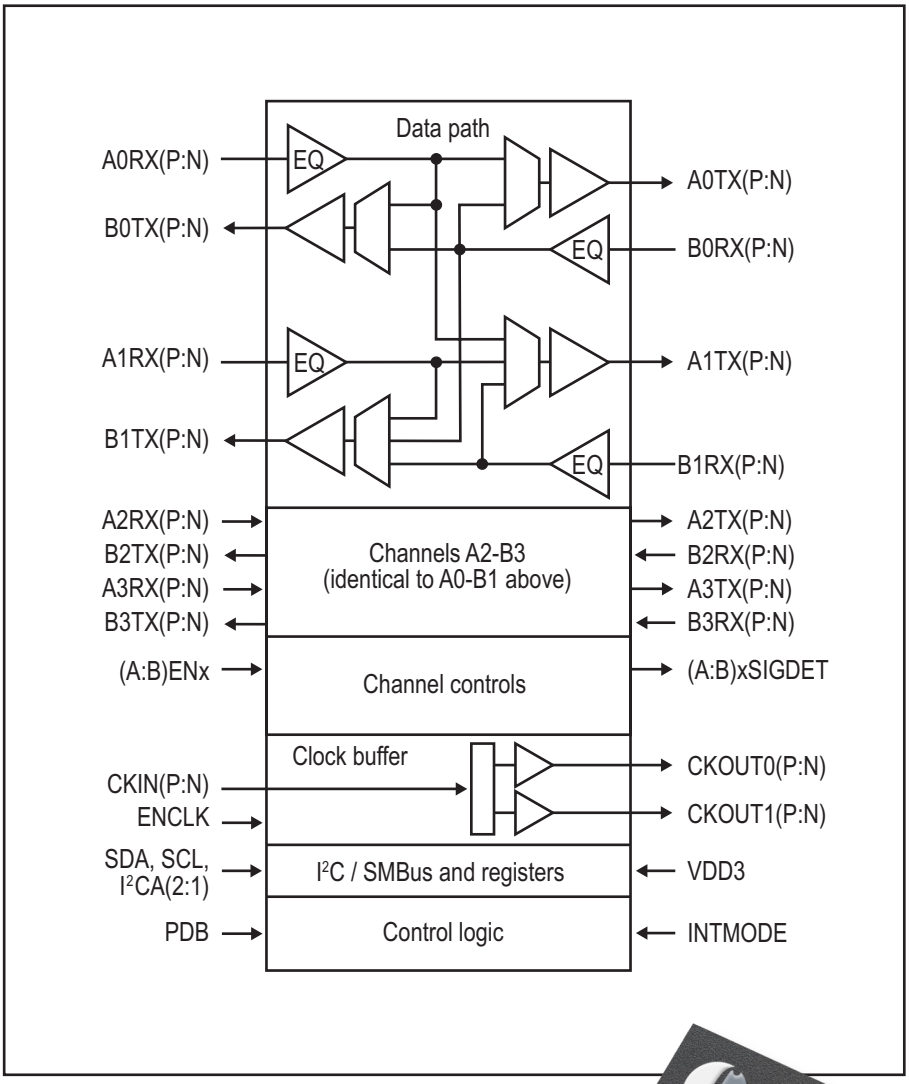

Discover what IDT know-how can do for you:
www.IDT.com/go/SIP

DISCLAIMER Integrated Device Technology, Inc. (IDT) and its subsidiaries reserve the right to modify the products and/or specifications described herein at any time and at IDT's sole discretion. All information in this document, including descriptions of product features and performance, is subject to change without notice. Performance specifications and the operating parameters of the described products are determined in the independent state and are not guaranteed to perform the same way when installed in customer products. The information contained herein is provided without representation or warranty of any kind, whether express or implied, including, but not limited to, the suitability of IDT's products for any particular purpose, an implied warranty of merchantability, or non-infringement of the intellectual property rights of others. This document is presented only as a guide and does not convey any license under intellectual property rights of IDT or any third parties. IDT's products are not intended for use in life support systems or similar devices where the failure or malfunction of an IDT product can be reasonably expected to significantly affect the health or safety of users. Anyone using an IDT product in such a manner does so at their own risk, absent an express, written agreement by IDT.

Integrated Device Technology, IDT and the IDT logo are registered trademarks of IDT. Other trademarks and service marks used herein, including protected names, logos and designs, are the property of IDT or their respective third party owners. © Copyright 2011. All rights reserved.

PB_89HP0608X_REVA0112