ISL6568EVAL1 REV C

ISL6568 EVALUATION BOARD

DYNAMIC VID GENERATION CIRCUIT INCLUDED
LOAD TRANSIENT GENERATOR CIRCUIT INCLUDED

BOARD FEATURES
* 12V INPUT FOR POWER STAGE
* 2-PHASE OPERATION
* NTC COMPENSATION NETWORK OPTION
* LOAD TRANSIENT GENERATOR CIRCUIT INCLUDED
* ADJUSTABLE PVCC VOLTAGE FROM 5V-12V
* DYNAMIC VID CIRCUIT INCLUDED
* 70A CURRENT CAPABILITY
* DYNAMIC VID GENERATION CIRCUIT INCLUDED

TITLE:	DATE:
ENGINEER:	PAGE:

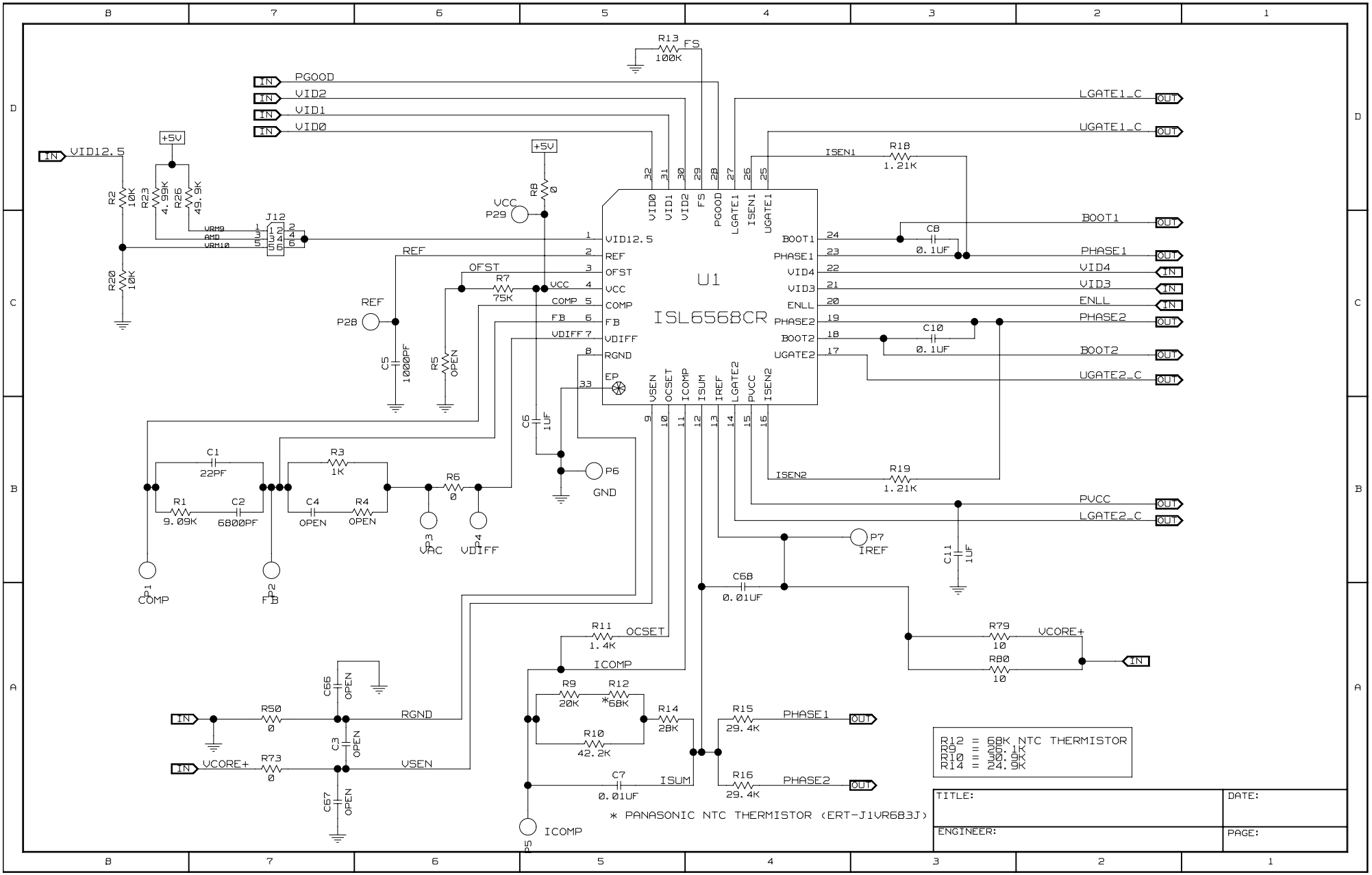
U1
ISL6568CR
PGOOD
VID2
VID1
VID0
VID12.5
FS
LGATE1_C
UGATE1_C
BOOT1
PHASE1
VID4
VID3
ENLL
PHASE2
BOOT2
UGATE2_C
PVCC
LGATE2_C
ISEN1
ISEN2
R13 100K
R18 1.21K
R19 1.21K
C8 0.1UF
C10 0.1UF
C11 1UF
C68 0.01UF
R79 10
R80 10
VCORE+
R2 10K
R20 10K
R23 4.99K
R26 49.9K
J12
VRM9
AMD
VRM10
+5V
R8 0
VCC
P29
REF
P28
OFST
R7 75K
C5 1000PF
R5 OPEN
C6 1UF
P6
GND
C1 22PF
R1 9.09K
C2 6800PF
R3 1K
C4 OPEN
R4 OPEN
R6 0
P3
VAC
P4
VDIFF
P1
COMP
P2
FB
P7
IREF
R11 1.4K
OCSET
ICOMP
R9 20K
R12 *68K
R10 42.2K
R14 28K
R15 29.4K
R16 29.4K
PHASE1
PHASE2
C7 0.01UF
ISUM
P5
ICOMP
R50 0
RGND
C66 OPEN
C3 OPEN
C67 OPEN
R73 0
VSEN
* PANASONIC NTC THERMISTOR (ERT-J1VR683J)
R12 = 68K NTC THERMISTOR
R9 = 20.1K
R10 = 30.9K
R14 = 24.9K
TITLE:
DATE:
ENGINEER:
PAGE:

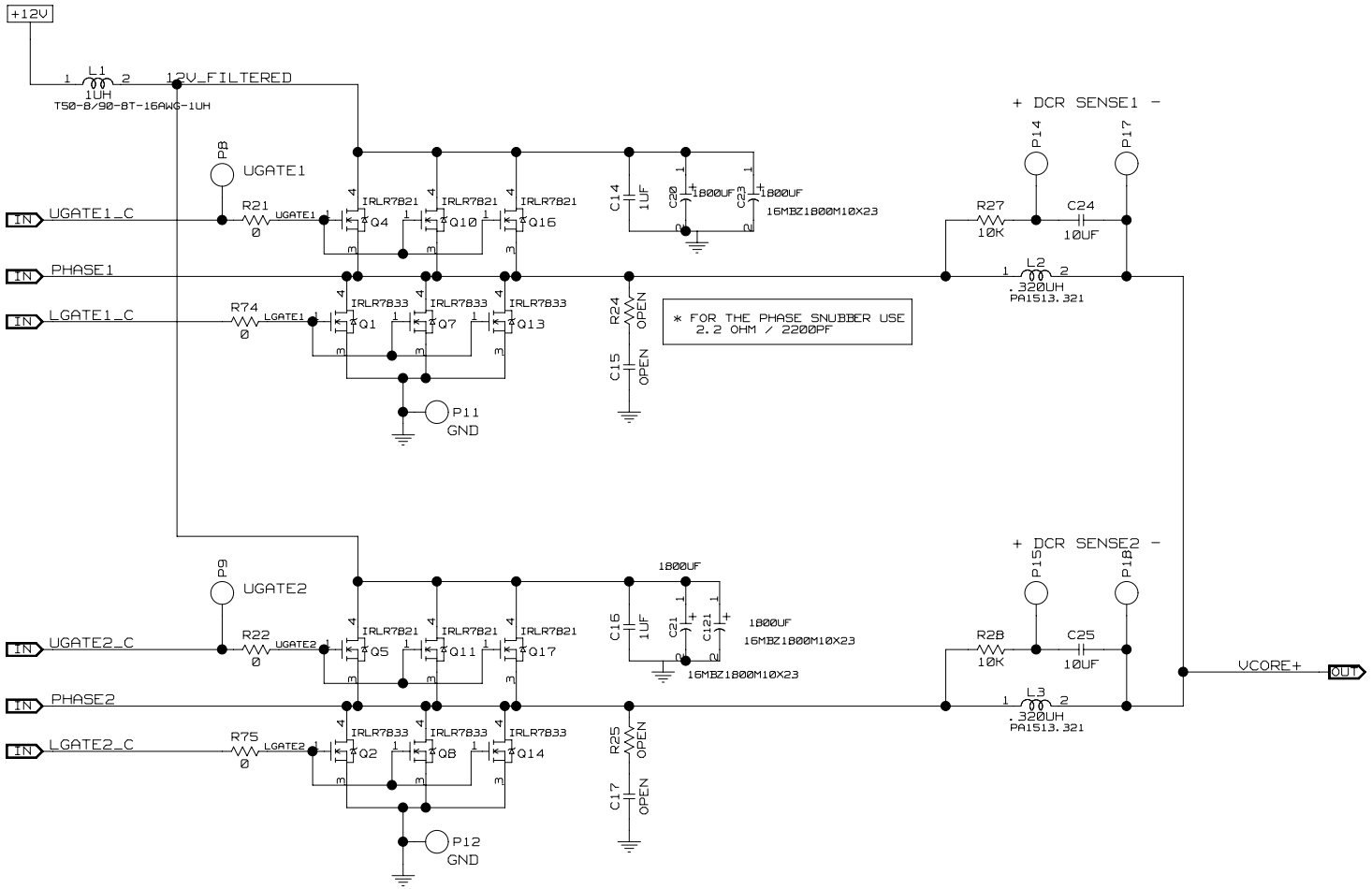

TITLE:	DATE:
ENGINEER:	PAGE:

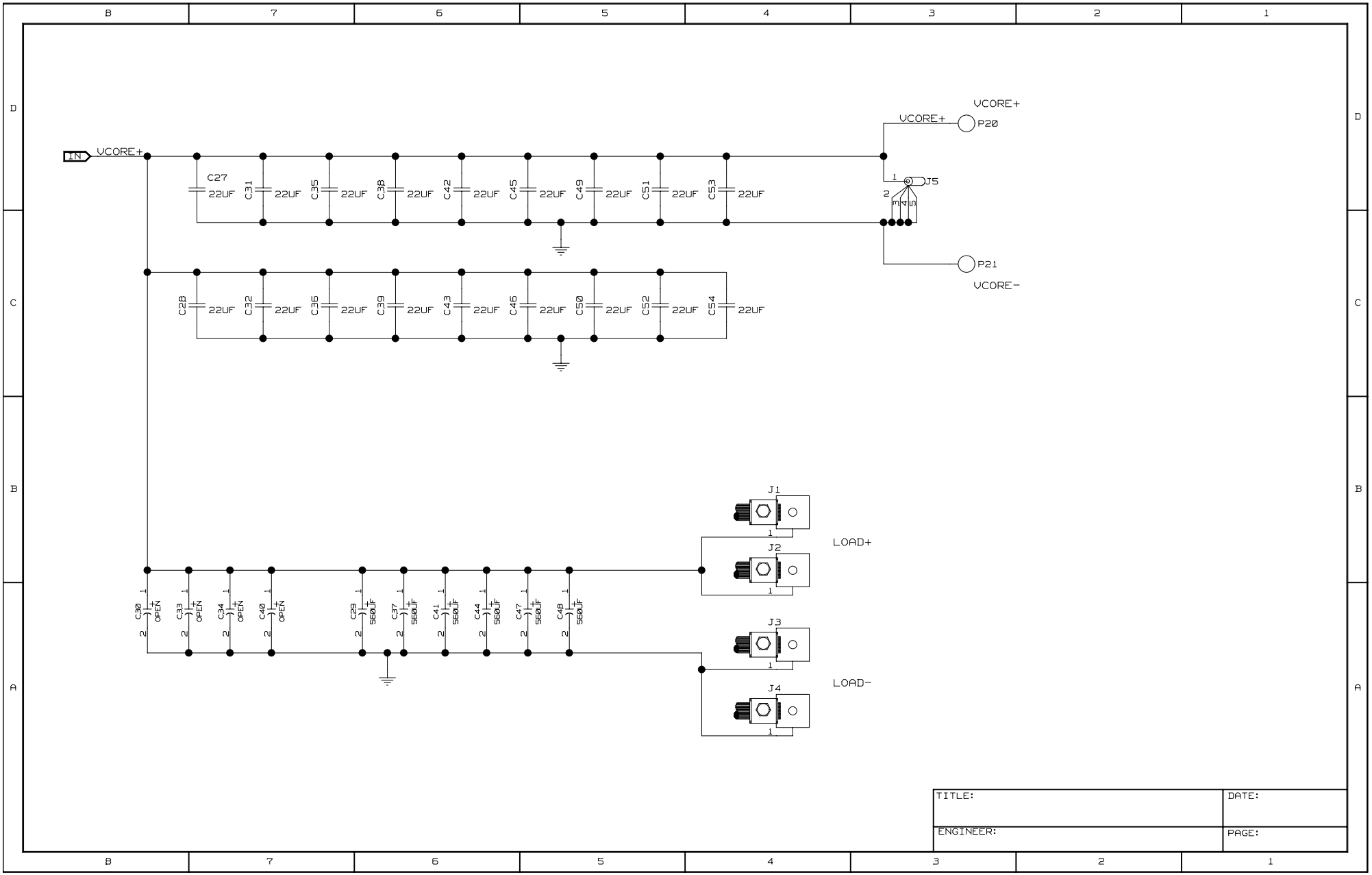

TITLE:	DATE:
ENGINEER:	PAGE:

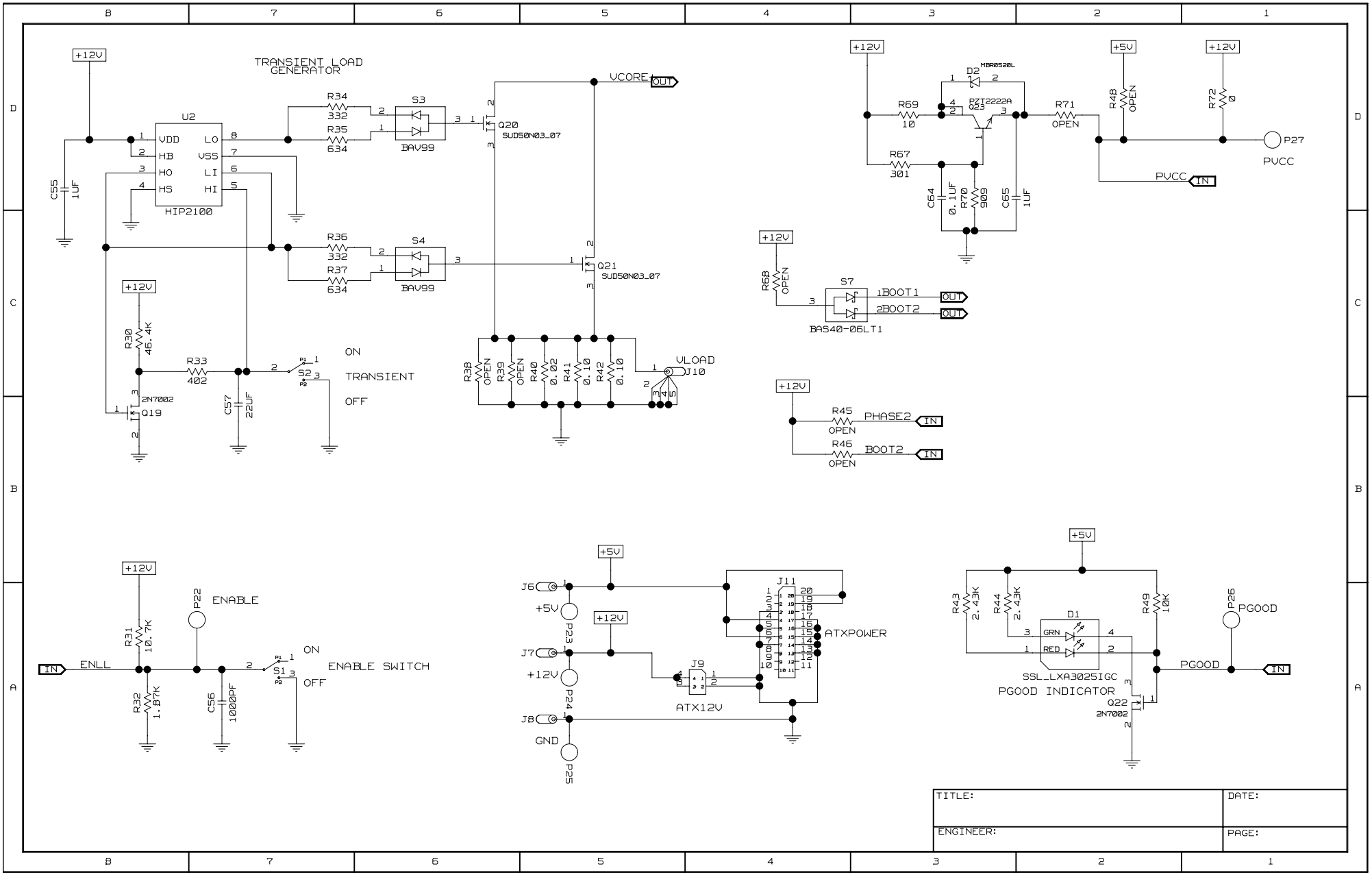

TITLE:	DATE:
ENGINEER:	PAGE:

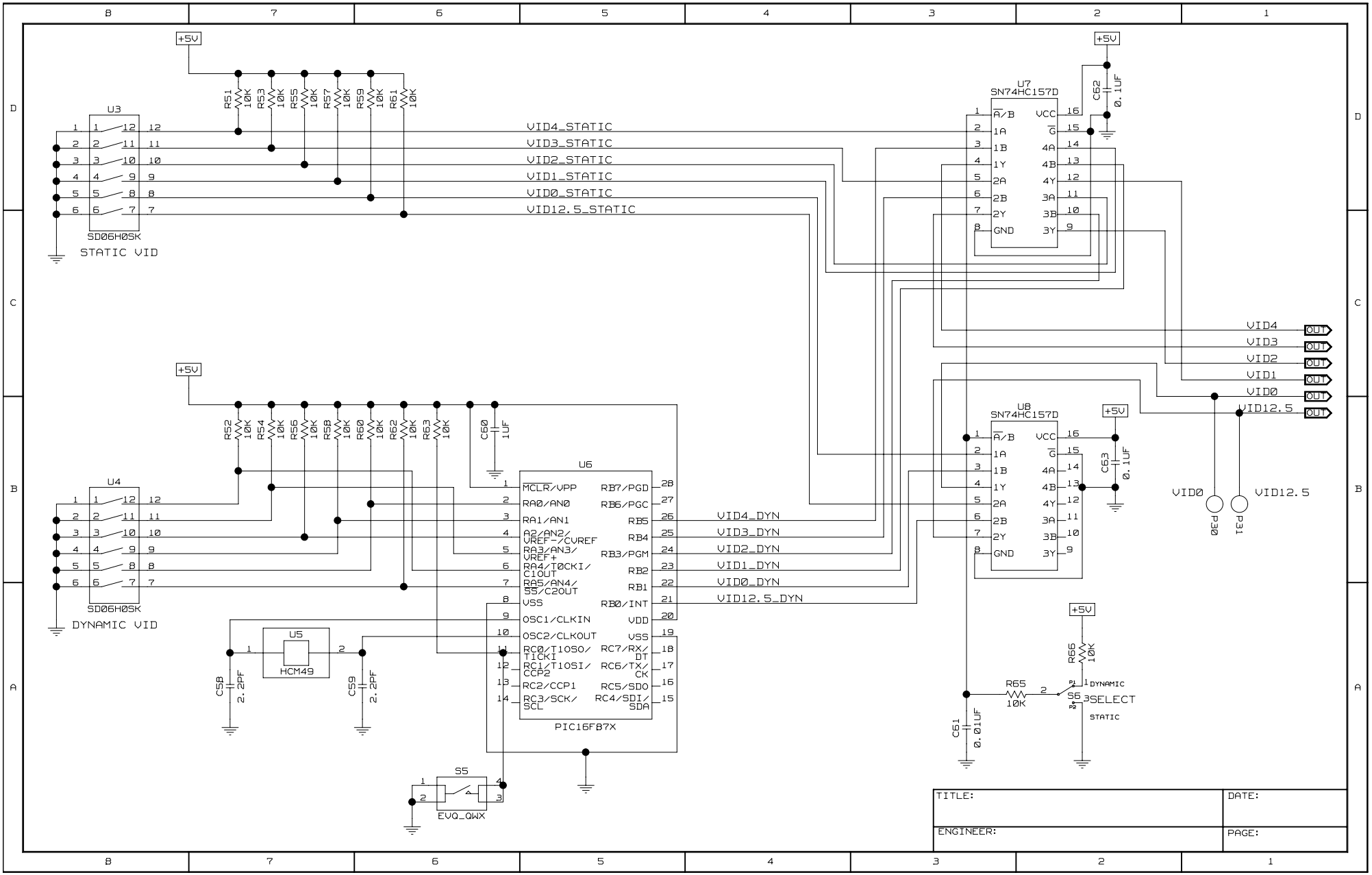
+5V
U3
SD06H0SK
STATIC VID
R51 10K
R53 10K
R55 10K
R57 10K
R59 10K
R61 10K
VID4_STATIC
VID3_STATIC
VID2_STATIC
VID1_STATIC
VID0_STATIC
VID12.5_STATIC
U7
SN74HC157D
C62 0.1UF
U4
SD06H0SK
DYNAMIC VID
R52 10K
R54 10K
R56 10K
R58 10K
R60 10K
R62 10K
R63 10K
C60 1UF
U6
PIC16F87X
MCLR/VPP
RA0/AN0
RA1/AN1
RA2/AN2/VREF-/CVREF
RA3/AN3/VREF+
RA4/T0CKI/C1OUT
RA5/AN4/SS/C2OUT
VSS
OSC1/CLKIN
OSC2/CLKOUT
RC0/T1OSO/T1CKI
RC1/T1OSI/CCP2
RC2/CCP1
RC3/SCK/SCL
RB7/PGD
RB6/PGC
RB5
RB4
RB3/PGM
RB2
RB1
RB0/INT
VDD
VSS
RC7/RX/DT
RC6/TX/CK
RC5/SDO
RC4/SDI/SDA
VID4_DYN
VID3_DYN
VID2_DYN
VID1_DYN
VID0_DYN
VID12.5_DYN
U5
HCM49
C58 2.2PF
C59 2.2PF
S5
EVQ_QWX
U8
SN74HC157D
C63 0.1UF
VID4
VID3
VID2
VID1
VID0
VID12.5
OUT
VID0
VID12.5
P30
P31
R65 10K
S6
DYNAMIC
SELECT
STATIC
C61 0.01UF
TITLE:
DATE:
ENGINEER:
PAGE:

Bill of Material

Top Layer Components

Qty	Reference	Value	Description	Vendor	Part No.	Package
1	C1	22pF	Capacitor, Ceramic, 50V, X7R, 10%	Various		0805
1	C2	6800pF	Capacitor, Ceramic, 50V, X7R, 10%	Various		0805
3	C3, C66, C67	OPEN	Capacitor, Ceramic	Various		0603
1	C4	OPEN	Capacitor, Ceramic	Various		0805
1	C5	1000pF	Capacitor, Ceramic, 50V, X7R, 10%	Various		0805
2	C6, C11	1.0µF	Capacitor, Ceramic, 50V, X7R, 10%	Various		0805
1	C7	.01µF	Capacitor, Ceramic, 50V, X7R, 10%	Various		0603
3	C8, C10, C64	0.1µF	Capacitor, Ceramic, 50V, X7R, 10%	Various		0805
4	C14, C16, C55, C65	1.0µF	Capacitor, Ceramic, 16V, X7R, 10%	Various		1206
2	C15, C17	OPEN	Capacitor, Ceramic	Various		0805
4	C20, C21, C23, C121	1800µF	Capacitor, AL Electrolytic, 16V	Rubycon	16MBZ1800M10X23	Thru Hole
18	C27, C28, C31, C32, C35, C36, C38, C39, C42, C43, C45, C46, C49-C54	22µF	Capacitor, Ceramic, 6.3V, X5R, 20%	Various		1206
6	C29, C37, C41, C44, C47, C48	560µF	Capacitor, OS-CON, 4V	Sanyo	4SEPC560MX	Thru Hole
4	C30, C33, C34, C40	OPEN	Capacitor			Thru Hole
1	C57	22µF	Capacitor, Ceramic, 16V, X5R, 20%	TDK	C3225X5R1C226M	1210
1	C68	.01µF	Capacitor, Ceramic, 50V, X7R, 10%	Various		0603
1	D1		Red/Green LED	Lumex	SLL-LXA3025IGC	SMT
1	D2		Schottky Diode	Fairchild	MBR0520L	SOD-123
4	J1-J4		Terminal Connector	Burndy	KPA8CTP	Solder Mount
2	J5, J10		Probe Socket	Tektronix	1314353-00	Thru Hole
2	J6-J7		Female Banana Connector, Red	Johnson Components	111-0702-001	Screw On
1	J8		Female Banana Connector, Black	Johnson Components	111-0703-001	Screw On
1	J9		2x2 Power HDR 1MTG Hole	Molex	39-29-9042	Thru Hole
1	J11		2x10 Power Conn-1MTG Pin	Molex	39-29-9203	Thru Hole
1	J12		Molex HDR 2x3 1MT Hole	Molex		Thru Hole
1	L1	1.0µH	Inductor, T50-8/90 core, 8 turns AWG16	Micrometals	T50-8/90	Thru Hole
2	L2, L3	0.320µH	Inductor, 13x13mm	Pulse	PA1513.321	Surface Mount
19	P1-P5, P7-P9, P14, P15, P17, P18, P20, P22, P26, P28, P29, P30, P31		Small Test Point	Jolo	SPCJ-123-01	Thru Hole
8	P6, P11, P12, P21, P23-P25, P27		Turret Test Point	Keystone	1514-2	Thru Hole
4	Q1, Q2, Q8, Q13		Power MOSFET	International Rectifier	IRLR7833	TO-252AA
4	Q5, Q7, Q14, Q16	OPEN	Power MOSFET			TO-252AA

Qty	Reference	Value	Description	Vendor	Part No.	Package
4	Q4, Q10, Q11, Q17		Power MOSFET	International Rectifier	IRLR7821	TO-252AA
1	Q19		General Purpose MOSFET	Various	2N7002	SOT-23
2	Q20, Q21		Power MOSFET	Vishay	SUD50N03-07	TO-252AA
1	Q23		General Purpose NPN Transistor	Fairchild	PZT2222A	SOT-223
1	R1	9.09kΩ	Resistor, 1%, 1/16W	Various		0603
1	R3	1.0kΩ	Resistor, 1%, 1/16W	Various		0603
1	R4	OPEN	Resistor	Various		0603
1	R5	OPEN	Resistor	Various		0603
3	R6, R50, R73	0Ω	Resistor, 1%, 1/16W	Various		0603
1	R7	75.0kΩ	Resistor	Various		0603
5	R8, R21, R22, R74, R75	0Ω	Resistor, 1%, 1/10W	Various		0805
1	R9	20kΩ	Resistor, 1%, 1/16W	Various		0603
1	R10	42.2kΩ	Resistor, 1%, 1/16W	Various		0603
1	R11	1.40kΩ	Resistor, 1%, 1/16W	Various		0603
1	R12	68kΩ	NTC Thermistor	Panasonic	ERT-J1VR683J	0603
1	R13	100kΩ	Resistor, 1%, 1/16W	Various		0603
1	R14	28kΩ	Resistor, 1%, 1/16W	Various		0603
2	R15, R16	29.4kΩ	Resistor, 1%, 1/16W	Various		0603
2	R18, R19	1.21kΩ	Resistor, 1%, 1/16W	Various		0603
2	R24, R25	OPEN	Resistor, 1%, 1/8W	Various		1206
1	R30	46.4kΩ	Resistor, 1%, 1/16W	Various		0603
1	R33	402Ω	Resistor, 1%, 1/16W	Various		0603
2	R34, R36	332Ω	Resistor, 1%, 1/16W	Various		0603
2	R35, R37	634Ω	Resistor, 1%, 1/16W	Various		0603
2	R38, R39	OPEN	Thick Film Chip Resistor	Various		2512
1	R40	.020Ω	Thick Film Chip Resistor, 1%, 1W	Various		2512
2	R41, R42	.100Ω	Thick Film Chip Resistor, 1%, 1W	Various		2512
2	R45, R46	OPEN	Resistor	Various		0603
1	R48	OPEN	Resistor	Various		1206
1	R67	301Ω	Resistor, 1%, 1/10W	Various		0805
1	R68	OPEN	Resistor, 1%, 1/8W	Various		1206
1	R69	10Ω	Resistor, 1%, 1/10W	Various		0805
1	R70	909Ω	Resistor, 1%, 1/10W	Various		0805
1	R71	OPEN	Resistor, 1%, 1/8W	Various		1206
1	R72	0.0Ω	Resistor, 1%, 1/8W	Various		1206/2512
2	R79, R80	10Ω	Resistor, 1%, 1/16W	Various		0603
3	S1, S2, S6		Switch SPDT, Ultra Mini Toggle	C&K Components	GT11MSCKE	SMD
2	S3, S4		Dual Diode	Various	BAV99	SOT-23
1	S5		Momentary Pushbutton Switch	Panasonic	EVQ-QWT-03W	SMD

Qty	Reference	Value	Description	Vendor	Part No.	Package
1	S7		Common Anode Dual Schottky Diode	On-Semiconductor	BAS40-06LT1	SOT-23
1	U1		Endura Multi-phase Controller	Intersil	ISL6568CR	MLFP-32
1	U2		MOSFET Driver IC	Intersil	HIP2100IB	SO-8
2	U3, U4		Low Profile DIP Switch, SPST, 6 Position	C&K Components	SD06H0SK	SMT
1	U5		8.00MHz Quartz Crystal	Citizen	HCM49-8.000MABJT	SMD

Bottom Layer Components

Qty	Reference	Value	Description	Vendor	Part No.	Package
2	C24, C25	10µF	Capacitor, Ceramic, 16V, X7R, 10%	Various		1206
1	C56	1000pF	Capacitor, Ceramic, 50V, X7R, 10%	Various		0603
2	C58, C59	2.2pF	Capacitor, Ceramic, 50V, X7R, 10%	Various		0603
1	C60	1.0µF	Capacitor, Ceramic, 50V, X7R, 10%	Various		0805
1	C61	.01µF	Capacitor, Ceramic, 50V, X7R, 10%	Various		0603
2	C62, C63	0.1µF	Capacitor, Ceramic, 50V, X7R, 10%	Various		0603
1	Q22		General Purpose MOSFET	Various	2N7002	SOT-23
20	R2, R20, R27, R28, R49, R51-R63, R65, R66	10kΩ	Resistor, 1%, 1/16W	Various		0603
1	R23	4.99kΩ	Resistor, 1%, 1/16W	Various		0603
1	R26	49.9kΩ	Resistor, 1%, 1/16W	Various		0603
1	R31	10.7kΩ	Resistor, 1%, 1/16W	Various		0603
1	R32	1.87kΩ	Resistor, 1%, 1/16W	Various		0603
2	R43, R44	2.43kΩ	Resistor, 1%, 1/16W	Various		0603
1	U6		8-bit microcontroller	Microchip	PIC16F873A-SO	SOIC-32W
2	U7, U8		Quad 2-to-1 Line Data Selector/Multiplexer	Texas Instruments	SN74HC157D	SOIC-16

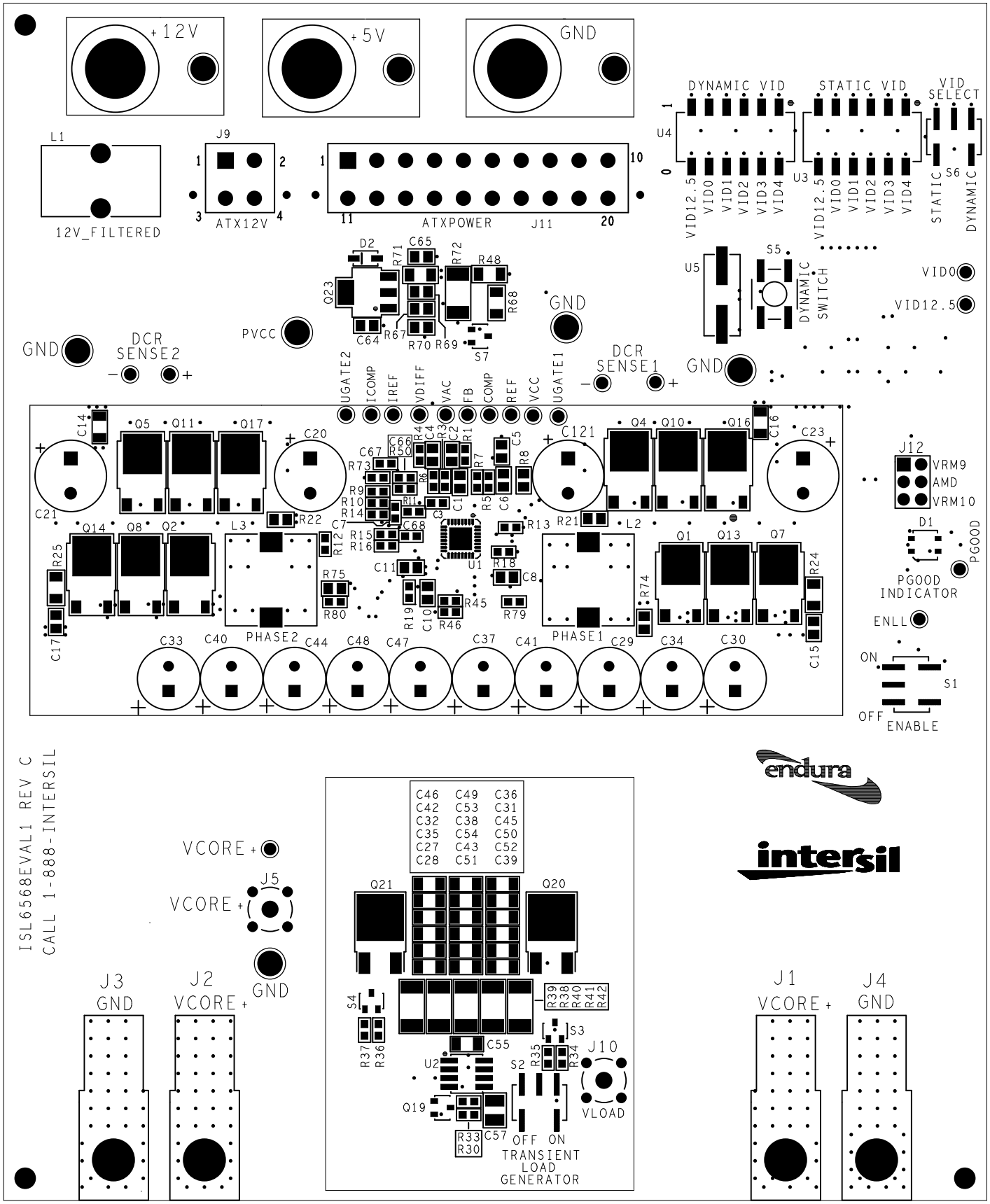
+12V
+5V
GND
DYNAMIC VID
STATIC VID
VID SELECT
U4
U3
VID12.5
VID0
VID1
VID2
VID3
VID4
STATIC
DYNAMIC
L1
12V_FILTERED
J9
ATX12V
ATXPOWER
J11
U5
S5
DYNAMIC SWITCH
VID0
VID12.5
GND
PVCC
DCR SENSE2
DCR SENSE1
UGATE2
ICOMP
IREF
VDIFF
VAC
FB
COMP
REF
VCC
UGATE1
J12
VRM9
AMD
VRM10
D1
PGOOD
PGOOD INDICATOR
ENLL
ON
OFF
S1
ENABLE
PHASE2
PHASE1
ISL6568EVAL1 REV C
CALL 1-888-INTERSIL
VCORE+
J5
J3 GND
J2 VCORE+
J1 VCORE+
J4 GND
C46 C49 C36
C42 C53 C31
C32 C38 C45
C35 C54 C50
C27 C43 C52
C28 C51 C39
Q21
Q20
S4
R37
R36
R39
R38
R40
R41
R42
S3
C55
U2
S2
R35
R34
J10
VLOAD
Q19
R33
R30
C57
OFF ON
TRANSIENT LOAD GENERATOR

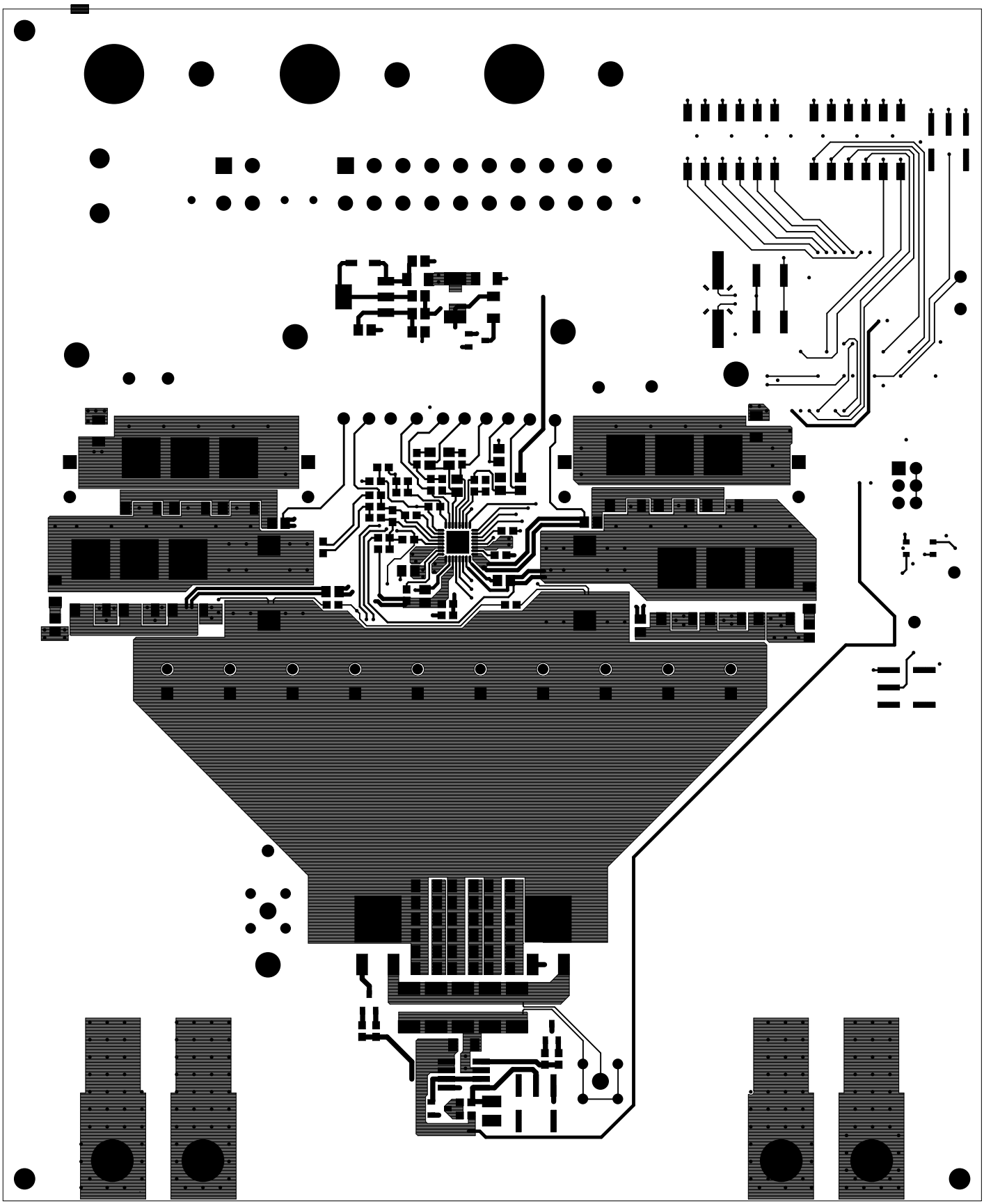

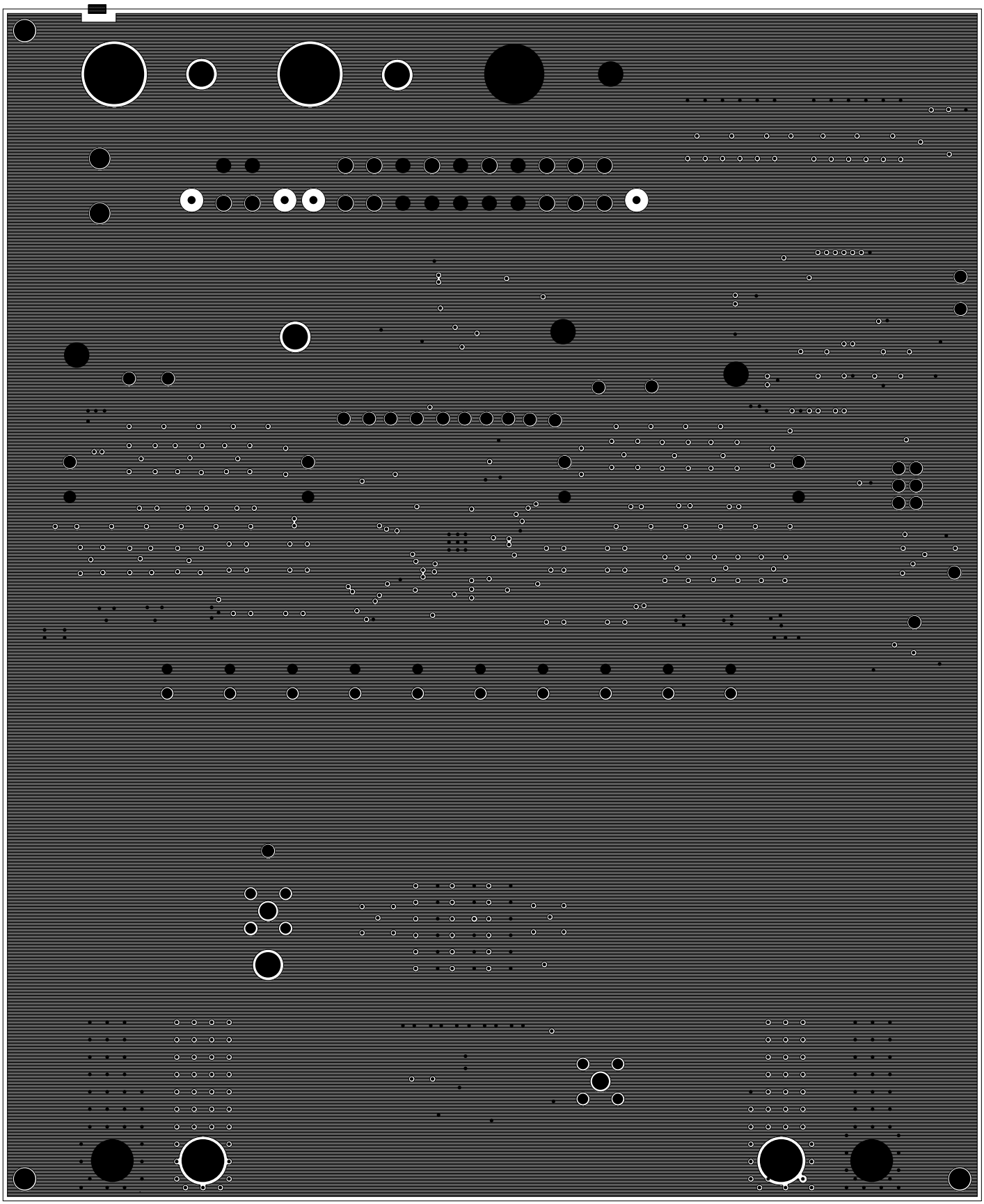

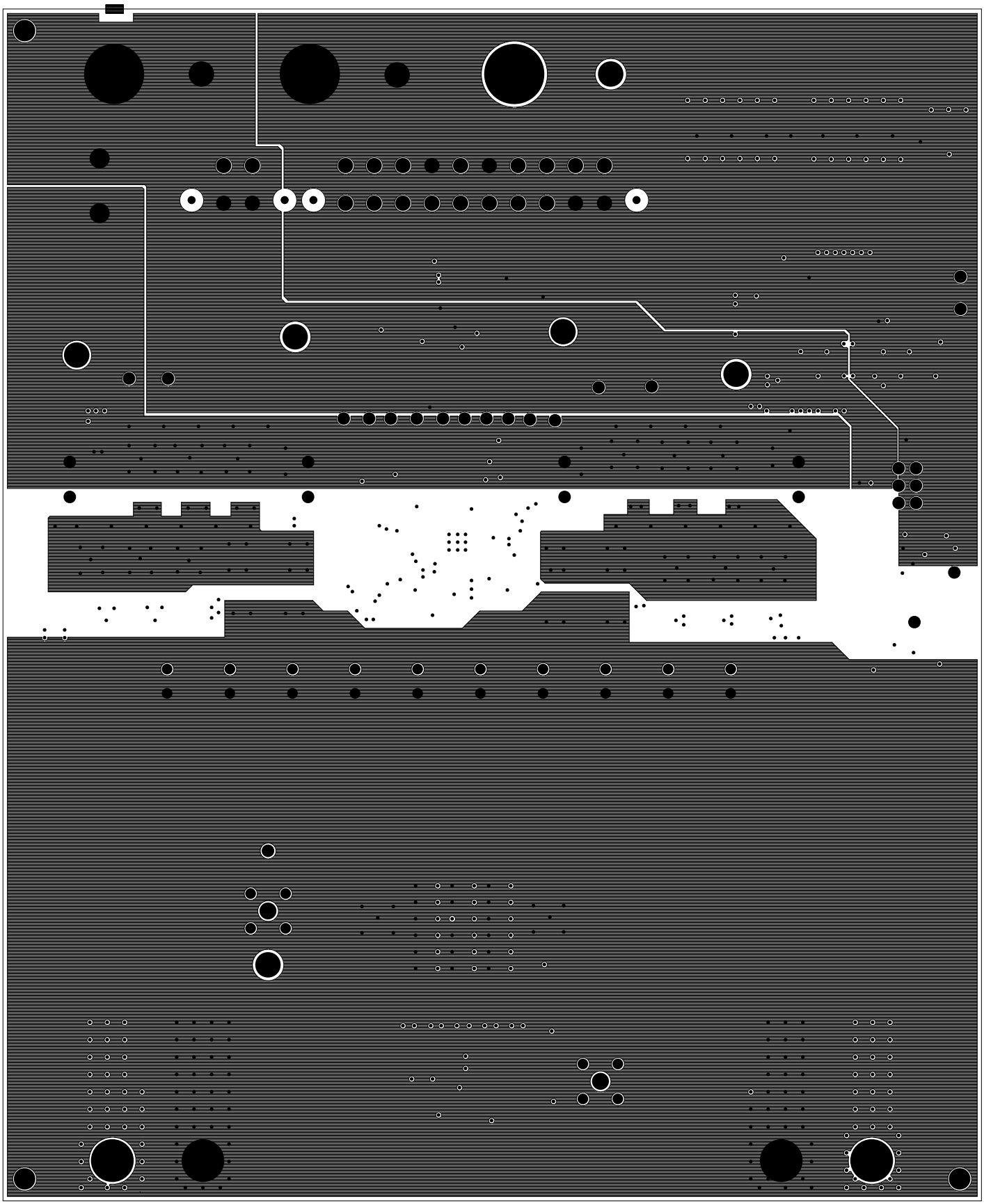

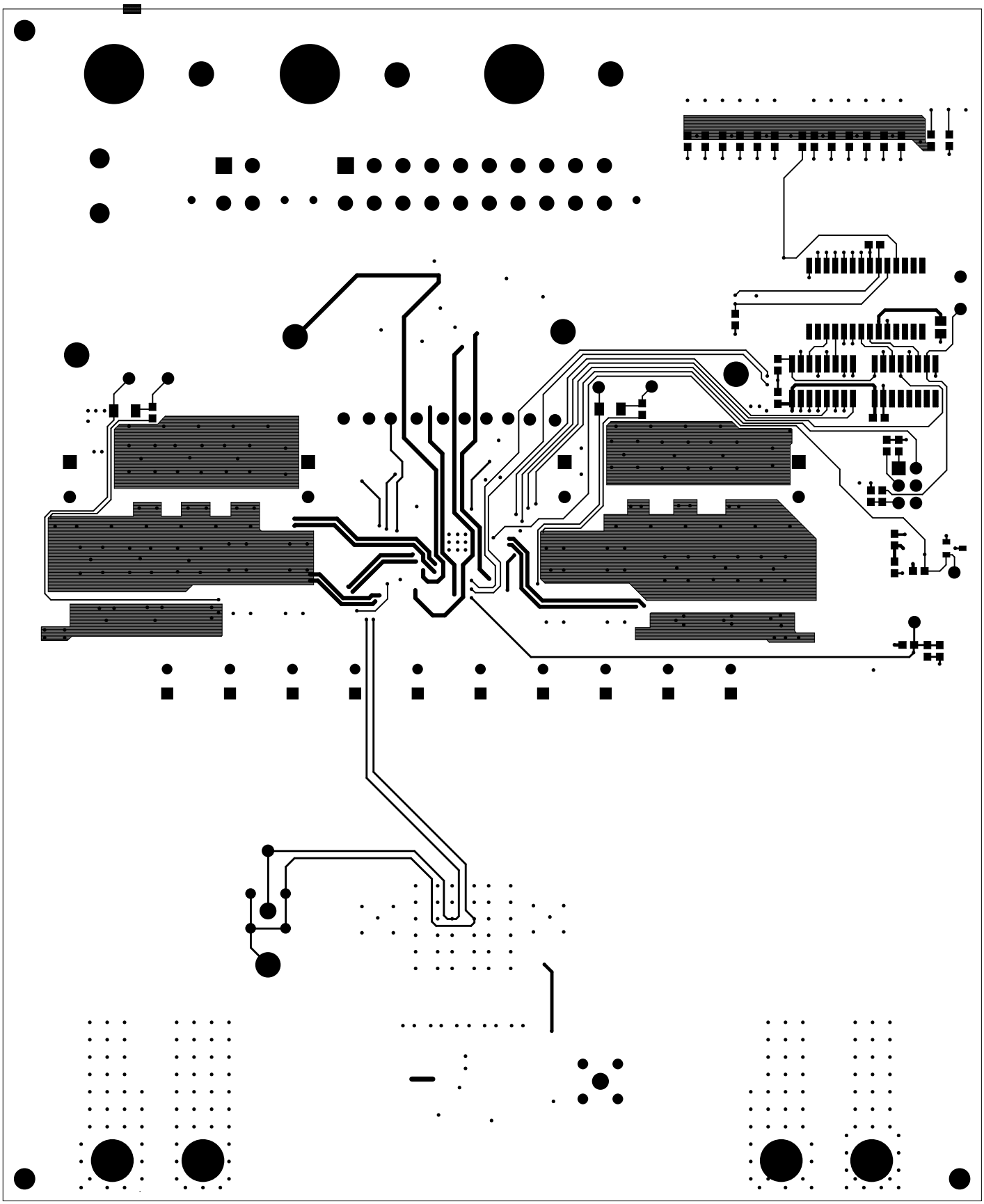

J7
J6
J8
P24
P23
P25
R95
R90
R89
R96
R94
R93
R63
R61
R62
R57
R55
R56
R51
R66
R65
J1
J9
J11
P30
U6
C58
C60
P31
C59
C61
P27
P11
P12
P18
P15
P6
U7
U8
C63
C62
R58
C55
P17
P14
R57
C54
P9
P7
P3
P1
P29
P2
P4
P5
P8
R53
R52
R50
C21
C20
C12
C23
Q22
P26
R49
R43
R44
P22
R31
R32
C30
C34
C29
C41
C37
C47
C48
C44
C40
C33
P20
J5
P21
J3
J2
J10
J1
J4