RTKA211820DE0000BU

The RTKA211820DE0000BU board demonstrates and quickly evaluates the RAA211820 (QFN version), a DC/DC synchronous step-down regulator with programmable switching frequency.

The RAA211820 supports a wide input voltage range (from 4.5V to 75V) and adjustable output voltage. It delivers up to a continuous 2A output current with premium load regulation and line regulation performance.

Features

- Simple and flexible design
- 4.5V to 75V V_{IN} range
- Convenient power conversion

Specifications

The following are the design specifications for the RTKA211820DE0000BU:

- Input voltage (V_{IN}): 4.5V to 75V
- Output voltage (V_{OUT}): 3.3V
- Maximum output current: 2A

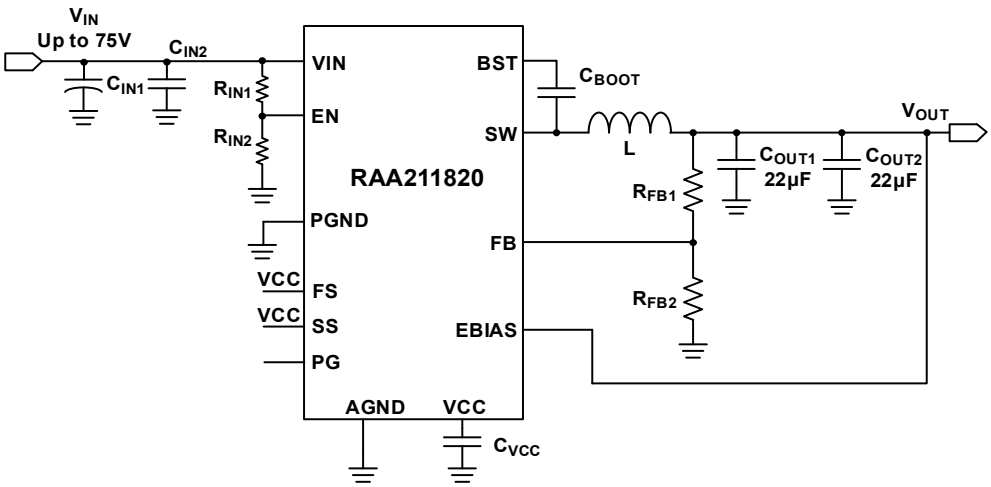

Figure 1. Block Diagram

© 2022 Renesas Electronics

Contents

1. Functional Description 3
1.1 Operational Characteristics 3
1.2 Setup and Configuration 3
2. Board Design 4
2.1 Layout Guidelines 4
2.2 Schematic Diagram 5
2.3 Bill of Materials 6
2.4 Board Layout 7
3. Typical Performance Graphs 9
4. Ordering Information 10
5. Revision History 10

1. Functional Description

The RAA211820 (QFN version) is an easy-to-use synchronous Buck switching regulator with an integrated 215mΩ/115mΩ high-side/low-side MOSFETs. The RTKA211820DE0000BU board demonstrates the operations of RAA211820 (QFN version). The board allows you to evaluate the performance of the part with different application circuits, and it provides you with a reference for a board layout.

1.1 Operational Characteristics

The board input voltage range is from 4.5V to 75V. The output voltage is set to 3.3V by default and can be changed by R_9 and R_{10}, as shown in Equation 1:

(EQ. 1) $$R_9 = R_{10} \bullet \frac{V_{OUT} - 0.8}{0.8}$$

Renesas recommends using a 20kΩ resistor for R_{10} and choose R_9 based on Equation 1.

1.2 Setup and Configuration

1. Populate a jumper on JP1(VIN shorted to EN).
2. Connect the power supply to the input terminals VIN(T1) and GND(T2). Connect the load to the output terminals VOUT(T3) and GND(T4). Make sure the setup is correctly connected before applying any power or load to the board.
3. Turn on the power supply and the part should start operating.
4. Verify that the output voltage is 3.3V and phase node waveforms can be monitored at J1.

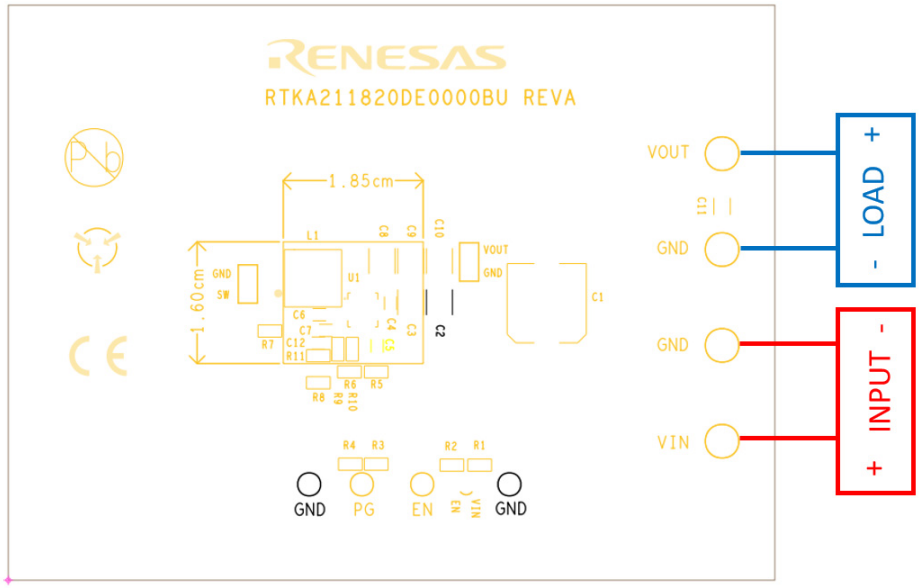

Figure 2. RTKA211820DE0000BU Board Setup

2. Board Design

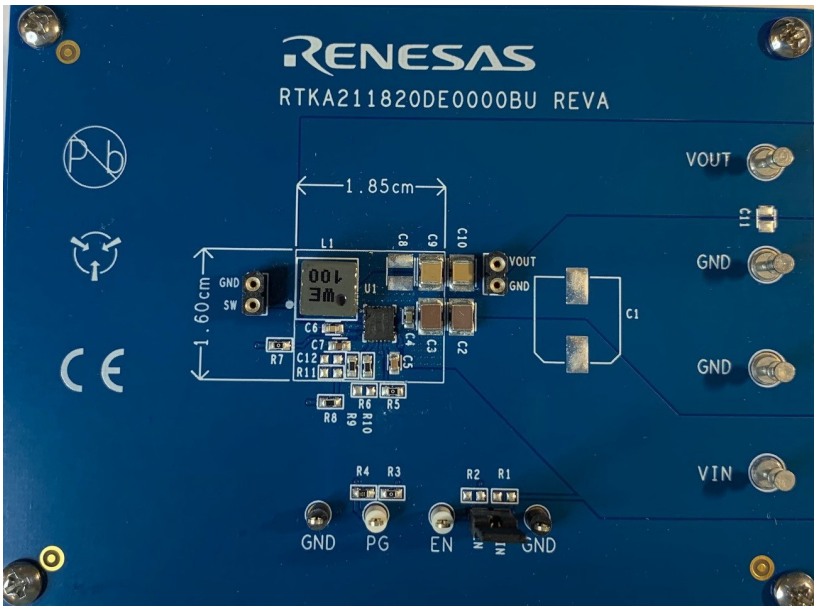

Figure 3. RTKA211820DE0000BU Evaluation Board (Top)

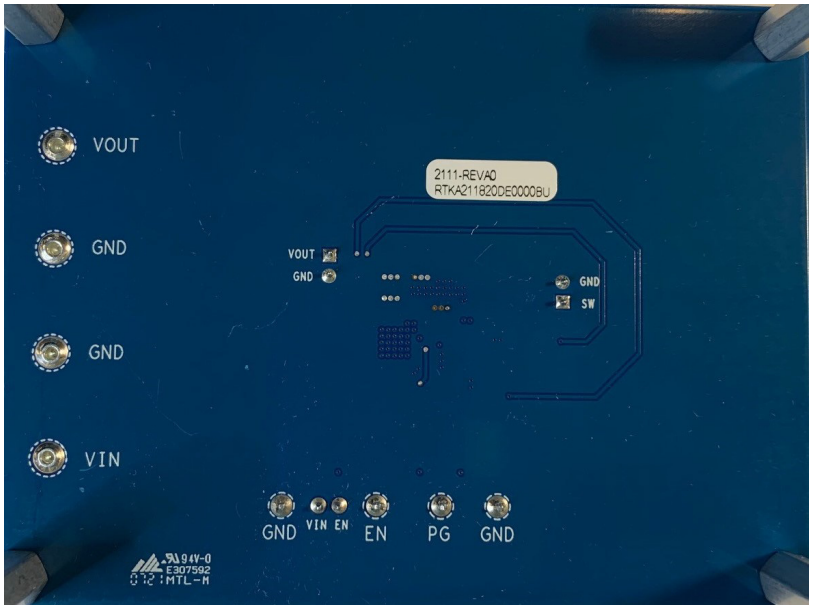

Figure 4. RTKA211820DE0000BU Evaluation Board (Bottom)

2.1 Layout Guidelines

For detailed layout guidelines, reference the Layout Guidelines section in the *RAA211820 Datasheet*.

2.2 Schematic Diagram

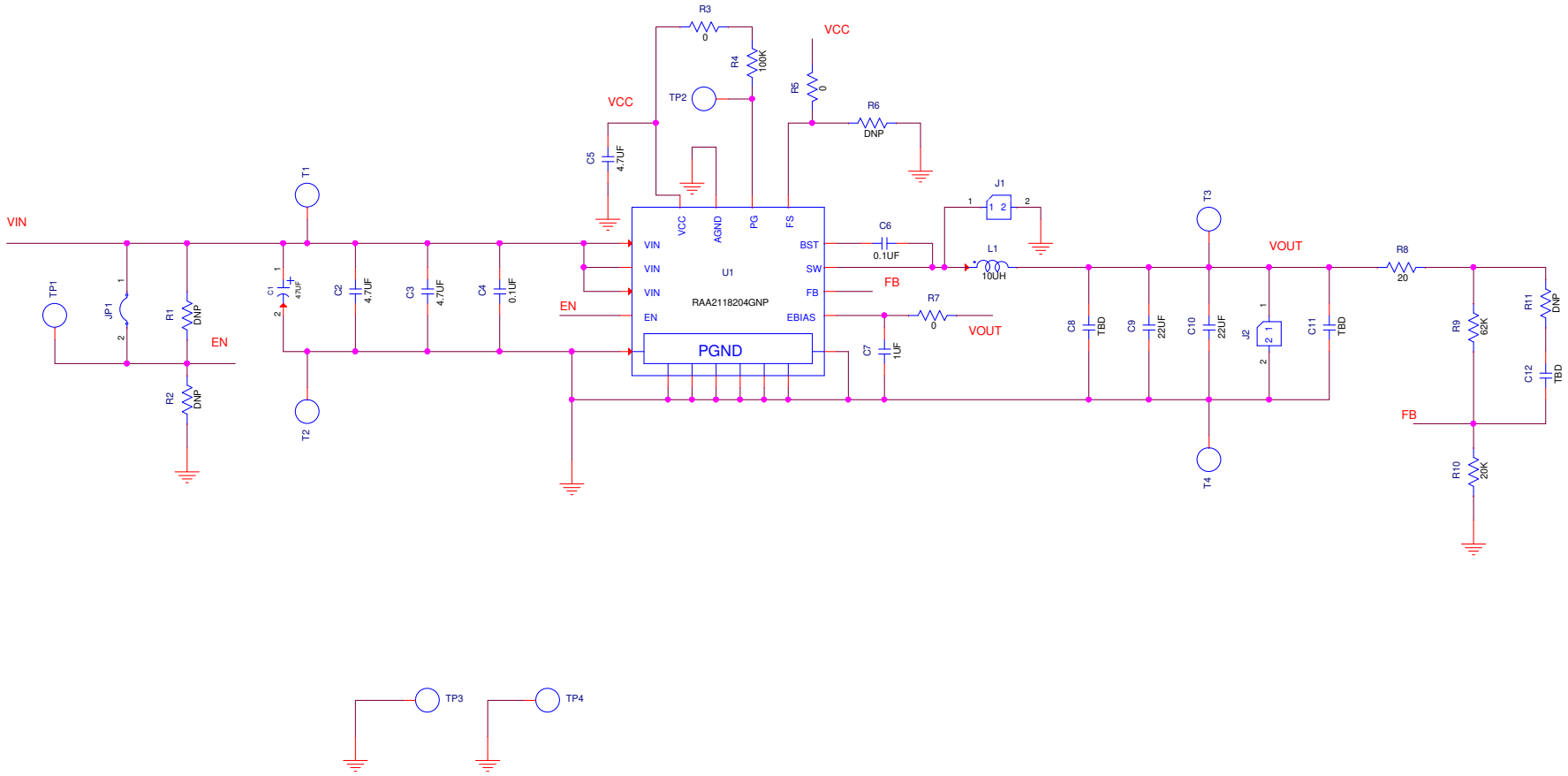

Figure 5. RTKA211820DE0000BU Schematic

2.3 Bill of Materials

Qty	Reference Designator	Description	Manufacturer	Manufacturer Part Number
2	C9, C10	CAP, SMD, 1210, 22µF, 16V, 10%, X7R, RoHS	Murata	GRM32ER71C226KE18L
1	C7	CAP, SMD, 0603, 1.0µF, 16V, 10%, X7R, RoHS	TDK	C1608X7R1C105K
1	C6	CAP, SMD, 0603, 0.1µF, 16V, 10%, X7R, RoHS	Murata	GCM188R71C104KA37D
1	C5	CAP, SMD, 0603, 4.7µF, 10V, 10%, X7S, RoHS	Murata	GRM188C71A475KE11D
1	C4	CAP, SMD, 0603, 0.1µF, 100V, 10%, X7R, RoHS	Murata	GRM188R72A104KA35J
2	C2, C3	CAP-AEC-Q200, SMD, 1210, 4.7µF, 100V, 10%, X7R, RoHS	TDK	CNA6P1X7R2A475K250AE
1	L1	COIL-PWR INDUCTOR, SMD, 6.6×6.4mm, 10µH, 20%, 7.6A, RoHS	Wurth Electronics	74439346100
4	T1, T2, T3, T4	CONN-DBL TURRET, TH, 0.218×0.078 PCB MNT, TIN/BRASS, RoHS	Keystone	1502-1
2	J1, J2	CONN-BRD-BRD, 1×2, TH, SOCKET, 1×64 STRIP, 2.54mm, ST	Mill-Max	310-43-164-41-001000
2	TP3, TP4	CONN-MINI TEST PT, VERTICAL, BLK, RoHS	Keystone	5001
2	TP1, TP2	CONN-MINI TEST POINT, VERTICAL, WHITE, RoHS	Keystone	5002
1	JP1	CONN-HEADER, 1×2, RETENTIVE, 2.54mm, 0.230×0.120, RoHS	BERG/FCI	69190-202HLF
1	R10	RES, SMD, 0603, 20kΩ, 1/10W, 1%, TF, RoHS	Various	Various
1	R9	RES-AEC-Q200, SMD, 0603, 62K, 1/10W, 1%, RoHS	Panasonic	ERJ-3EKF6202V
1	R8	RES-AEC-Q200, SMD, 0603, 20Ω, 1/10W, 1%, TF, RoHS	Panasonic	ERJ-3EKF20R0V
3	R3, R5, R7	RES, SMD, 0603, 0Ω, 1/10W, TF, RoHS	Various	Various
1	R4	RES, SMD, 0603, 100kΩ, 1/10W, 1%, TF, RoHS	Various	Various
1	U1	IC-80V 2A PWM SWITCHING REGULATOR, 16P, QFN, RoHS	Renesas	RAA211820GNP#HA0
0	C1	CAP, SMD, 12×10, 47µF, 100V, 20%, ALUM.ELEC., RoHS	Vishay	MAL214699904E3
0	C8, C11, C12, R1, R2, R6, R11	Do Not Populate	N/A	N/A

2.4 Board Layout

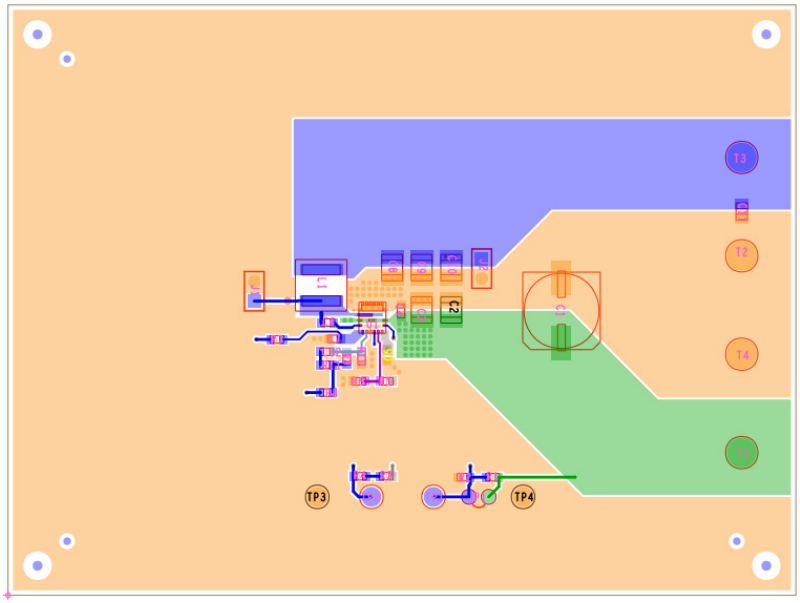

Figure 6. Top Layer

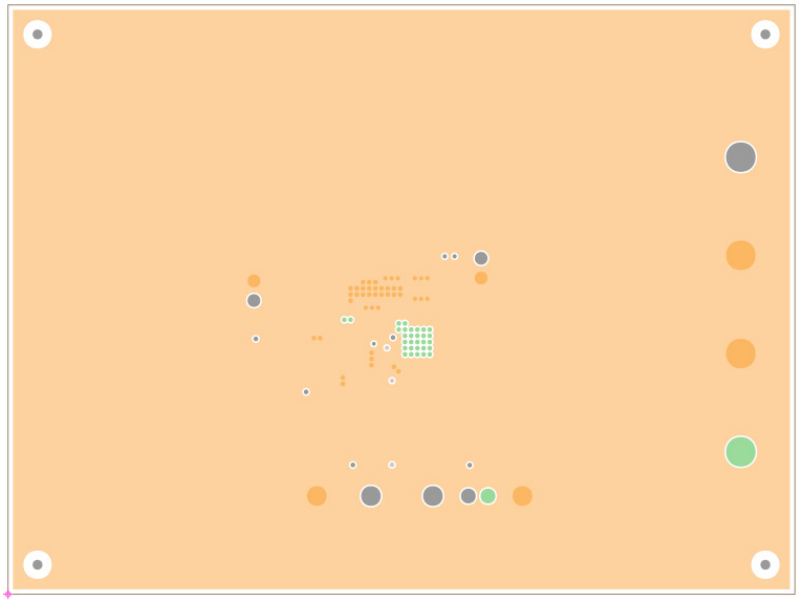

Figure 7. Second Layer

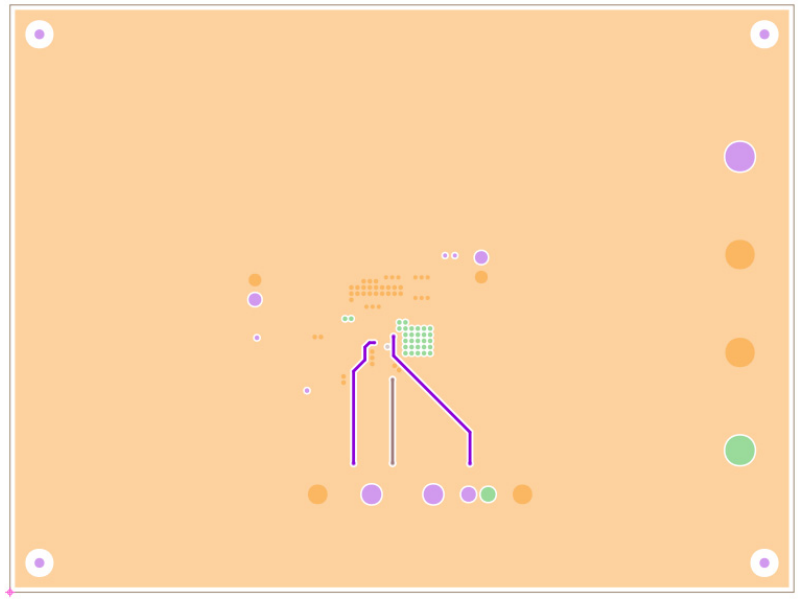

Figure 8. Third Layer

.

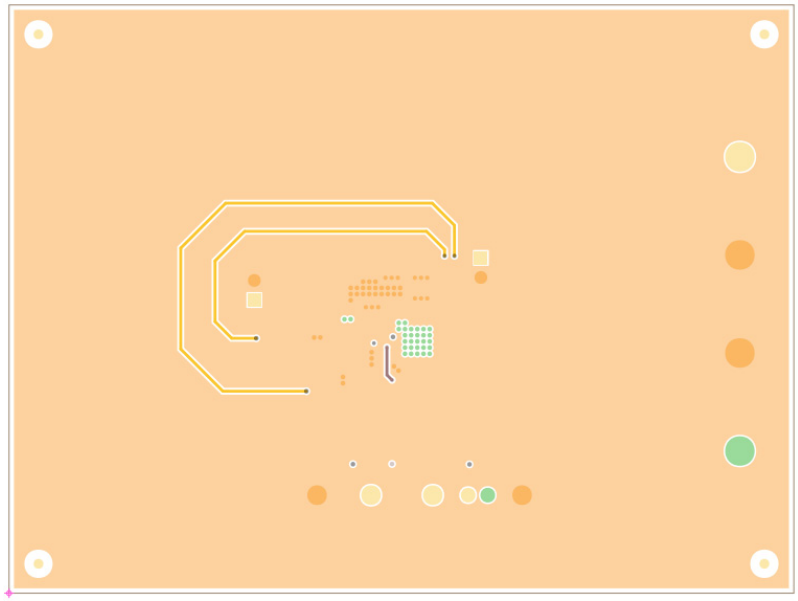

Figure 9. Bottom Layer

3. Typical Performance Graphs

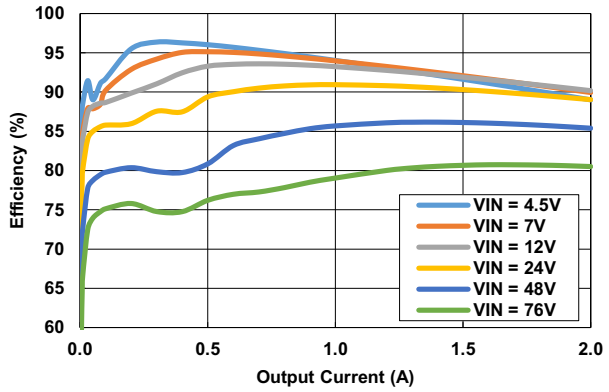

Figure 10. Efficiency vs Load

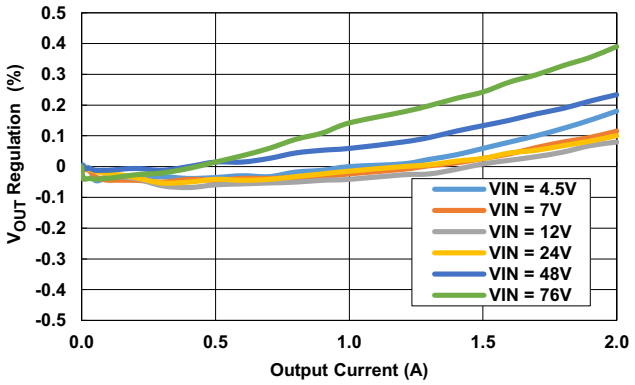

Figure 11. Load Regulation

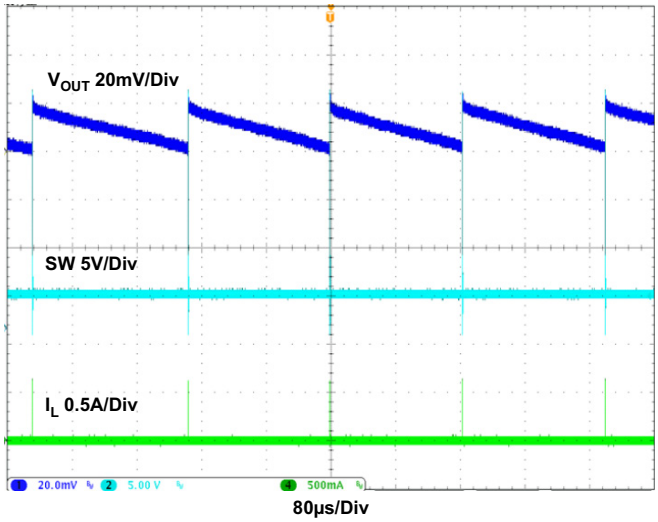

Figure 12. Output Ripple at No Load

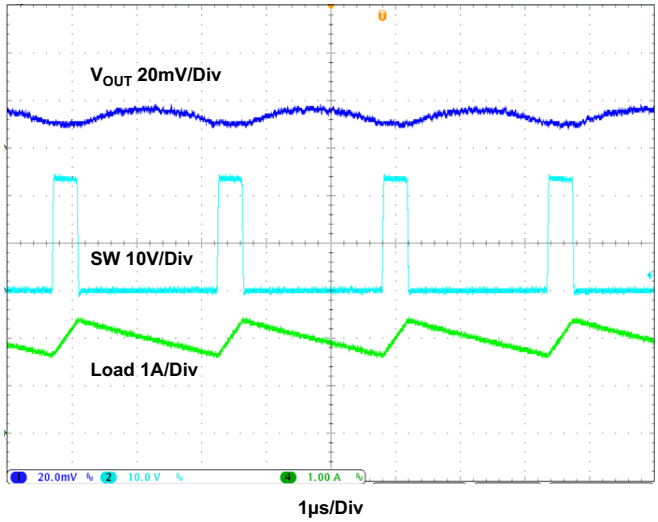

Figure 13. Output Ripple at 2A Load

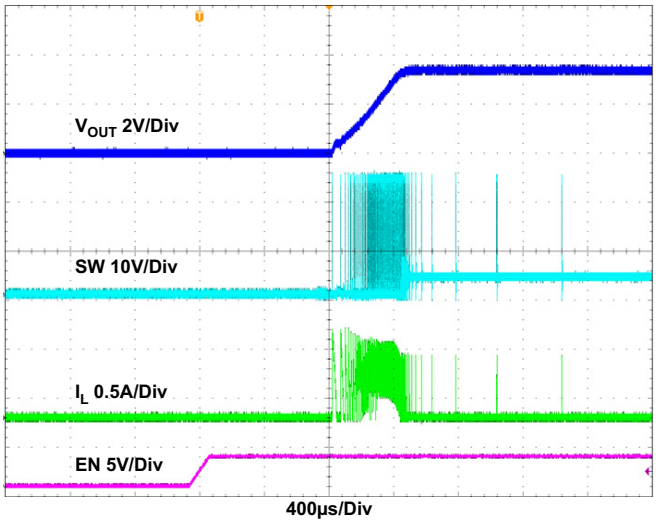

Figure 14. Startup by EN with No Load

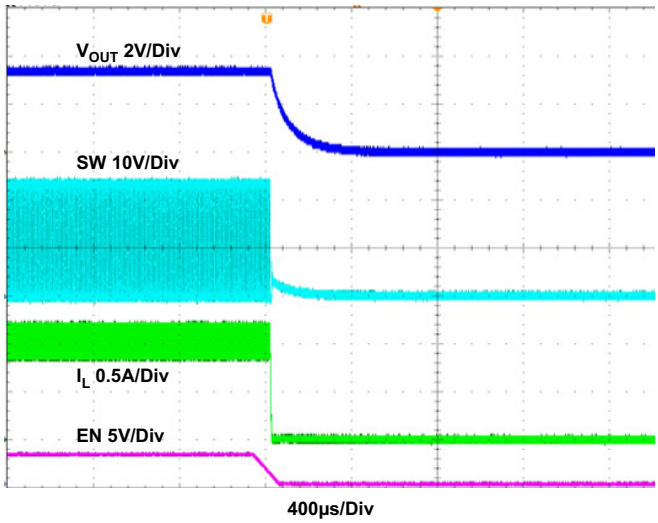

Figure 15. Shutdown by EN with 2A Load

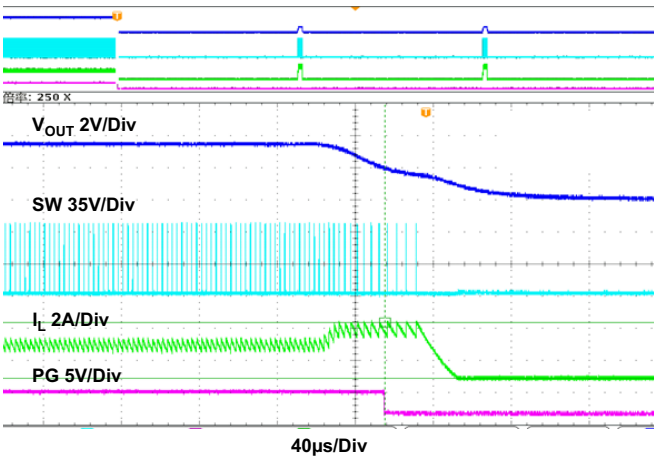

Figure 16. Overcurrent Protection

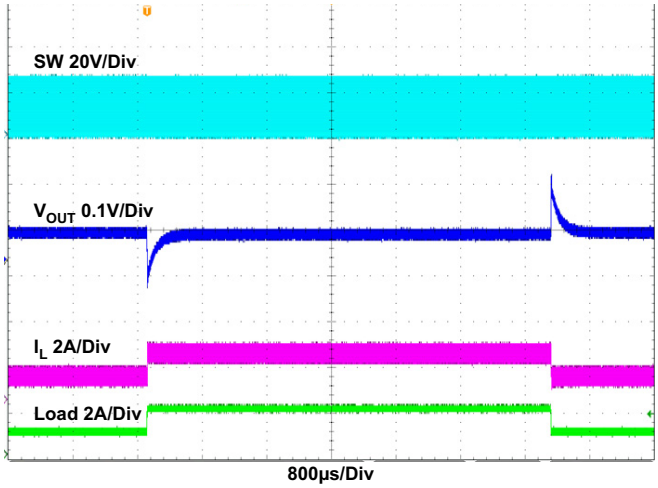

Figure 17. Load Transient 1A to 2A to 1A

4. Ordering Information

Part Number	Description
RTKA211820DE0000BU	RAA211820 (QFN version) evaluation board

5. Revision History

Revision	Date	Description
1.00	Jul 1, 2022	Initial release

IMPORTANT NOTICE AND DISCLAIMER

RENESAS ELECTRONICS CORPORATION AND ITS SUBSIDIARIES (“RENESAS”) PROVIDES TECHNICAL SPECIFICATIONS AND RELIABILITY DATA (INCLUDING DATASHEETS), DESIGN RESOURCES (INCLUDING REFERENCE DESIGNS), APPLICATION OR OTHER DESIGN ADVICE, WEB TOOLS, SAFETY INFORMATION, AND OTHER RESOURCES “AS IS” AND WITH ALL FAULTS, AND DISCLAIMS ALL WARRANTIES, EXPRESS OR IMPLIED, INCLUDING, WITHOUT LIMITATION, ANY IMPLIED WARRANTIES OF MERCHANTABILITY, FITNESS FOR A PARTICULAR PURPOSE, OR NON-INFRINGEMENT OF THIRD PARTY INTELLECTUAL PROPERTY RIGHTS.

These resources are intended for developers skilled in the art designing with Renesas products. You are solely responsible for (1) selecting the appropriate products for your application, (2) designing, validating, and testing your application, and (3) ensuring your application meets applicable standards, and any other safety, security, or other requirements. These resources are subject to change without notice. Renesas grants you permission to use these resources only for development of an application that uses Renesas products. Other reproduction or use of these resources is strictly prohibited. No license is granted to any other Renesas intellectual property or to any third party intellectual property. Renesas disclaims responsibility for, and you will fully indemnify Renesas and its representatives against, any claims, damages, costs, losses, or liabilities arising out of your use of these resources. Renesas' products are provided only subject to Renesas' Terms and Conditions of Sale or other applicable terms agreed to in writing. No use of any Renesas resources expands or otherwise alters any applicable warranties or warranty disclaimers for these products.

(Rev.1.0 Mar 2020)

Corporate Headquarters

TOYOSU FORESIA, 3-2-24 Toyosu,
Koto-ku, Tokyo 135-0061, Japan
www.renesas.com

Contact Information

For further information on a product, technology, the most up-to-date version of a document, or your nearest sales office, please visit:
www.renesas.com/contact/

Trademarks

Renesas and the Renesas logo are trademarks of Renesas Electronics Corporation. All trademarks and registered trademarks are the property of their respective owners.