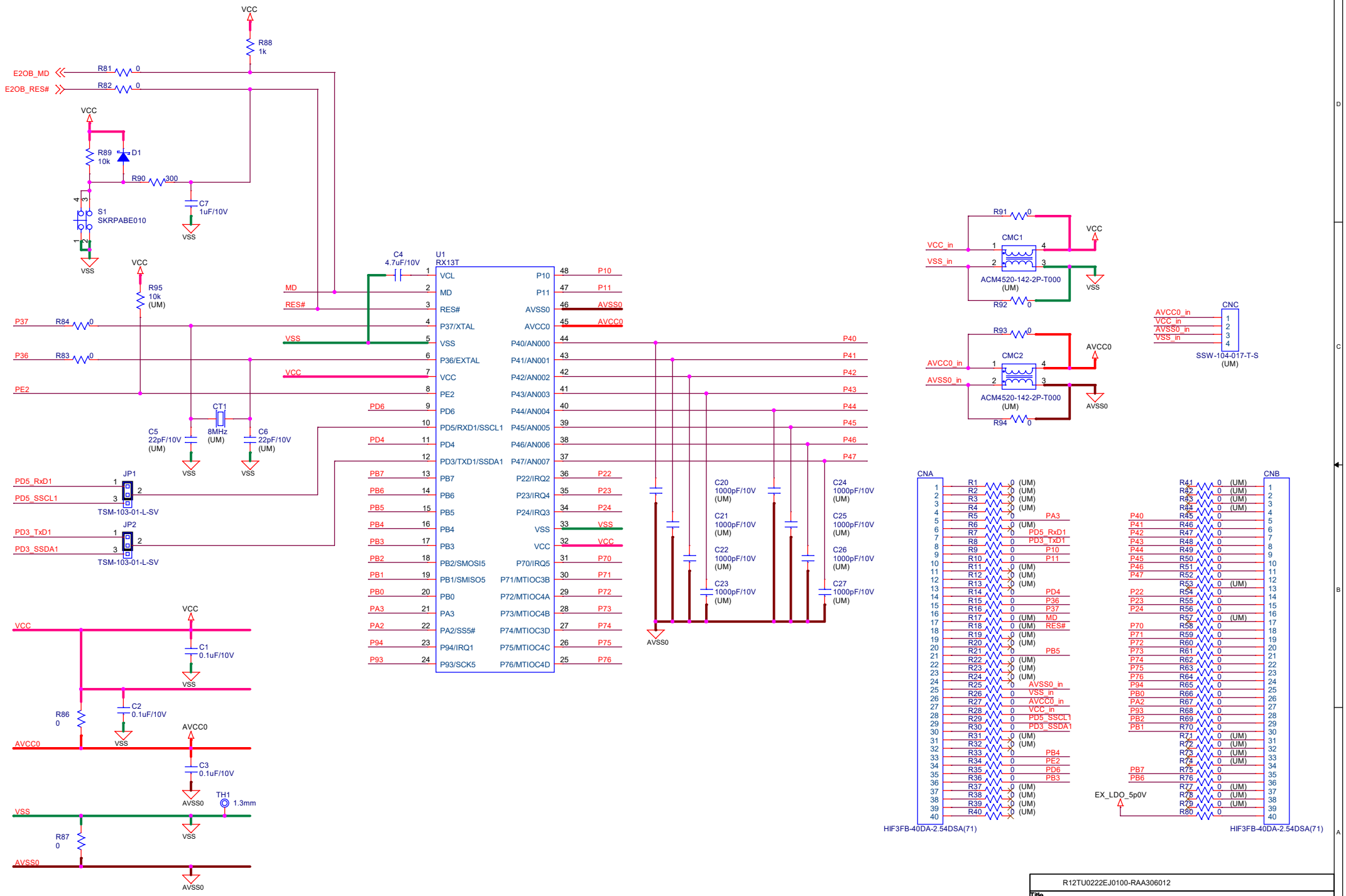

	R12TU0222EJ0100-RAA306012
Title	RAA306012 Control Board RX13T Edition Rev1.02
Size A3	RTK0EMXA10E00002BJ — Rev 1.02
Date: Monday, December 06, 2021	Sheet 1 of 1

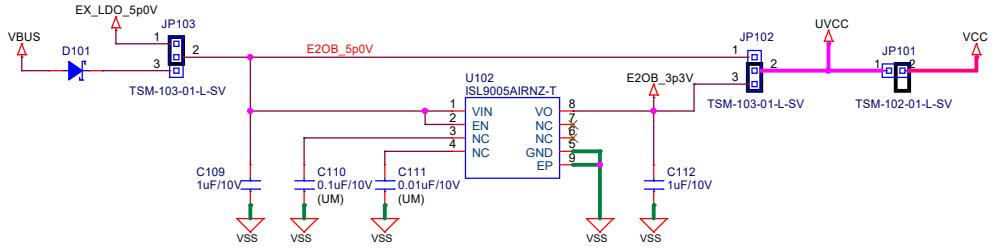

The E2 Lite host circuit is not public.

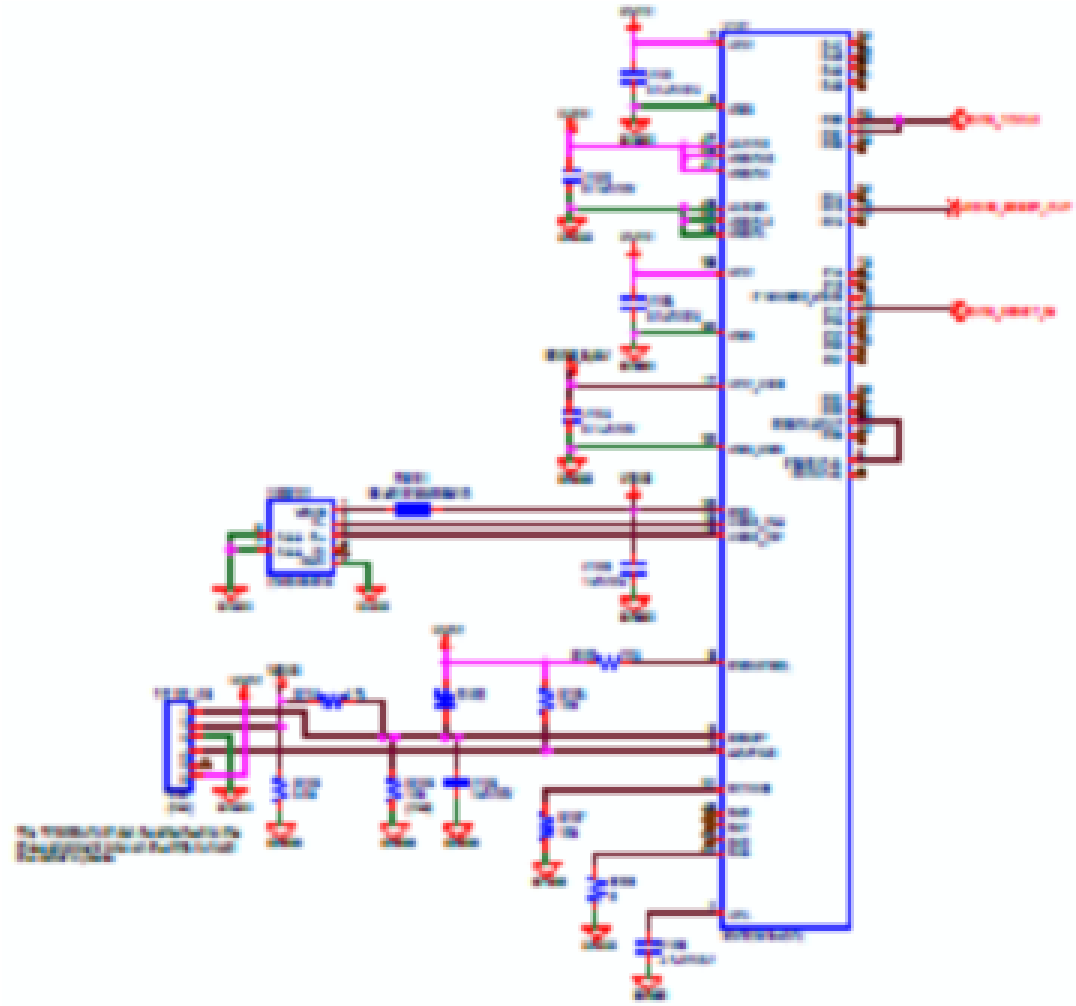

	R12TU0222EJ0100-RAA306012
Title	RAA306012 Control Board RX13T Edition Rev1.02
Size A3	RTK0EMXA10E00002BJ — Rev 1.02
Date: Monday, December 06, 2021	Sheet 2 of 1