QCIOT-HS4001POCZ

Pmod™ Evaluation Board

The QCIOT-HS4001POCZ board enables quick prototyping of the HS4001 High-Performance Relative Humidity and Temperature Sensor in a custom system design. The board provides a standard Pmod™ Type 6A (extended I²C) connection for the onboard sensor to plug into any required MCU evaluation kit with a matching connector.

The QCIOT-HS4001POCZ features Pmod connectors on both sides of the board to allow additional Type 6/6A boards to be connected in a daisy-chained solution with multiple sensors on the same MCU Pmod connector. Software support present in the Renesas IDE (e2 studio) provides code generation to connect the sensor and the MCU, thereby significantly reducing development time. With its standard connector and software support, the QCIOT-HS4001POCZ is ideal for the Renesas Quick-Connect IoT to rapidly create an IoT system.

Kit Contents

- QCIOT-HS4001POCZ Board

Features

- Relative humidity HS4001 sensor sample mounted:
  - RH accuracy: ±1.5%RH
  - ±0.2°C, typical (-10°C to +80°C)
  - Very low current consumption: 0.3µA average (8- bit resolution, 3.3V supply)
- Standardized type 6A Pmod connector supports I²C extended interface
- Dual connectors allow pass-through signals for daisy-chained solutions
- Software support in e2 studio minimizes development time with one-click code generation

Related Documents

- HS4001 Datasheet
- US082-INTERPEVZ Evaluation Board Manual
- Renesas Quick-Connect IoT Manual

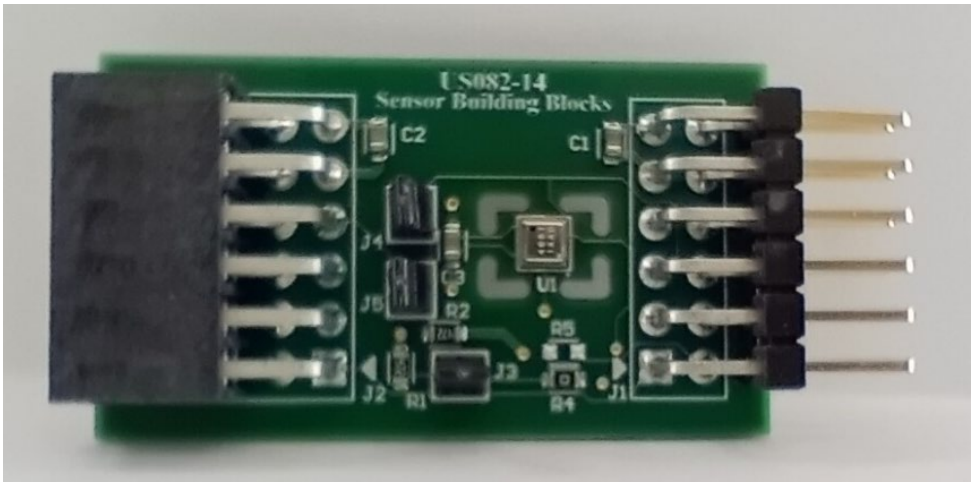

Figure 1. QCIOT-HS4001POCZ Pmod Board

© 2022 Renesas Electronics

Contents

1. Setup ... 3
1.1 Required or Recommended User Equipment ... 3
1.2 Software Installation and Usage ... 3
1.3 Kit Hardware Connections ... 3
2. Usage Guide ... 4
2.1 Overview of the QCIOT-HS4001POCZ ... 5
2.2 Programming Interface ... 5
3. QCIOT-HS4001POCZ Application Schematic ... 7
4. Bill of Materials (BOM) ... 7
5. Board Layout ... 8
6. Ordering Information ... 10
7. Revision History ... 10

Figures

Figure 1. QCIOT-HS4001POCZ Pmod Board ... 1
Figure 2. Evaluation Kit Connections using the QCIOT-HS4001POCZ and EK-RA2L1 ... 4
Figure 3. QCIOT-HS4001POCZ Pmod Board Features ... 5
Figure 4. Stack Selection in Renesas e2 Studio ... 6
Figure 5. Example Code to Start the Sensor after Configuration in FSP ... 6
Figure 6. QCIOT-HS4001POCZ Application Schematic ... 7
Figure 7. Silkscreen Top ... 8
Figure 8. Copper Top ... 8
Figure 9. Copper L1 Layer ... 8
Figure 10. Copper L2 Layer ... 9
Figure 11. Copper Bottom ... 9
Figure 12. Silkscreen Bottom ... 9

1. Setup

1.1 Required or Recommended User Equipment

The following additional lab equipment (sold separately) is required for using the board:

- Any MCU board that supports Type 6A Pmod.
- US082-INTERPEVZ interposer board if using one of the Renesas MCU kits shown in Table 1.

Table 1. Renesas MCU Evaluation Kits[1] Capable of Supporting Type 6A PMODs When Used with the US082-INTERPEVZ

RA	RX	Synergy
EK-RA4W1	RX111-Starter-Kit	PK-S5D9
EK-RA2A1	RX231-Starter-Kit	DK-S3A7
EK-RA2E1	RX23W-Starter-Kit	DK-S128
EK-RA4M1	RX23T-Starter-Kit	TB-S1JA
EK-RA6M1	RX24T-Starter-Kit	TB-S3A6
EK-RA6M2	RX24U-Starter-Kit	DK-S7G2
EK-RA6M3		
EK-RA6M3G		
EK-RA6M4		

1. This table is not a comprehensive list of supported MCU Kits. Refer to the evaluation kit hardware manual to confirm Pmod pinout.

1.2 Software Installation and Usage

Visit the Renesas website for the latest version of the e2 studio installer. The minimum FSP version supporting the HS400x sensor blocks is FSP 3.8.0. For the latest sensor support, ensure that the latest release is used.

Visit the Renesas Quick-Connect IoT webpage for more information about creating your customized system solution.

1.3 Kit Hardware Connections

Follow these procedures to set up the kit as shown on Figure 2.

1. Ensure the MCU evaluation kit being used has a Pmod connector set to Type 6A (refer to the kit hardware manual if unsure).
   a. If no Type 6A Pmod is available, ensure the MCU evaluation kit can use the US082-INTERPEVZ interposer board and insert the board into the MCU connector before adding any sensor boards.
2. Plug in the QCIOT-HS4001POCZ to the Type 6A connector, being careful to align Pin 1 on the sensor board and MCU kit.
3. Connect the J3, J4 and J5 jumpers to place 4.7kΩ pull-up resistors on the IRQ# and I^2C bus lines.
   a. Only one set of I^2C pull-up resistors should be used on the bus. If multiple sensor boards are used, only one board should have the jumpers present.
   b. If multiple modules use the IRQ# line on the PMOD, only one pull-up jumper should be present.
   c. MCU kits typically do not have pull-up resistors present on the bus lines but be sure to check for them.

4. The sensor is now ready to be used in the system. Follow the MCU kit instructions for connecting and powering up the evaluation kit.

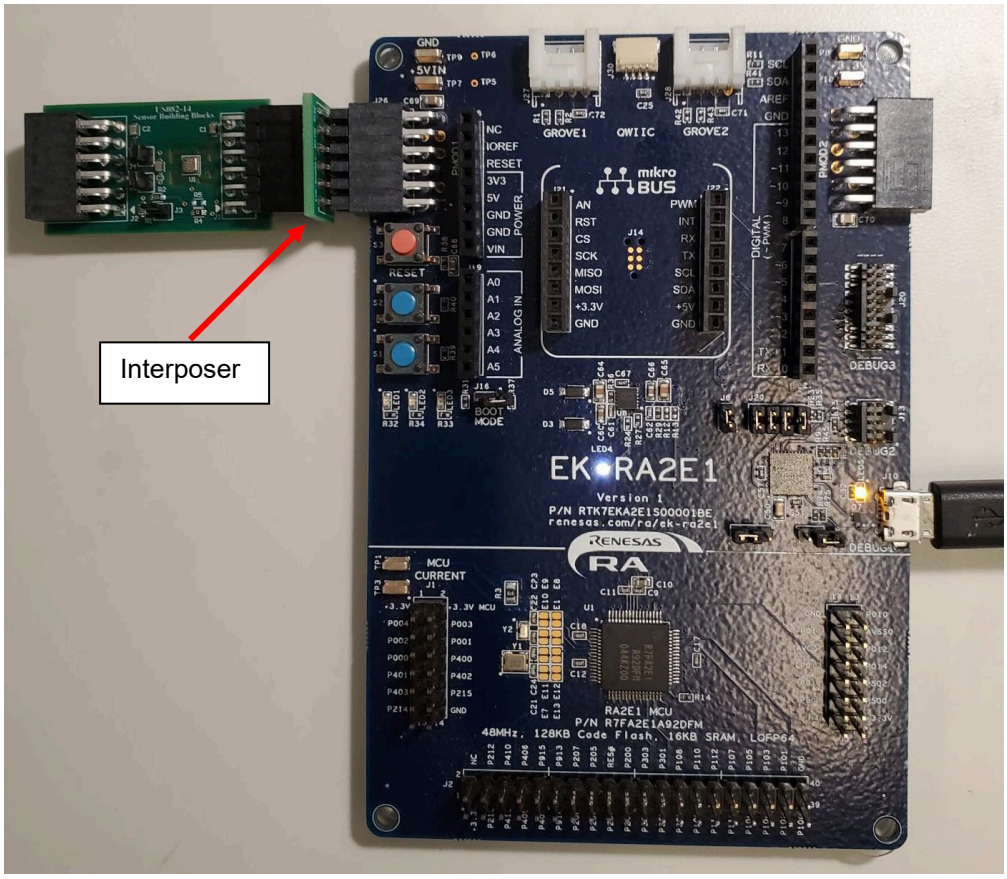

Figure 2. Evaluation Kit Connections using the QCIOT-HS4001POCZ and EK-RA2L1

2. Usage Guide

The QCIOT-HS4001POCZ functions as a sensor building block to create a custom system solution. It can be used individually or with a combination of other sensors using the Pmod Type 6A interface. See the Renesas Quick-Connect IoT webpage for a list of available Pmod sensor boards. Along with a simple hardware connection, the software sensor block in the Renesas software package allows the user to generate all the necessary glue code between the sensor and the MCU with the simple click of a button.

2.1 Overview of the QCIOT-HS4001POCZ

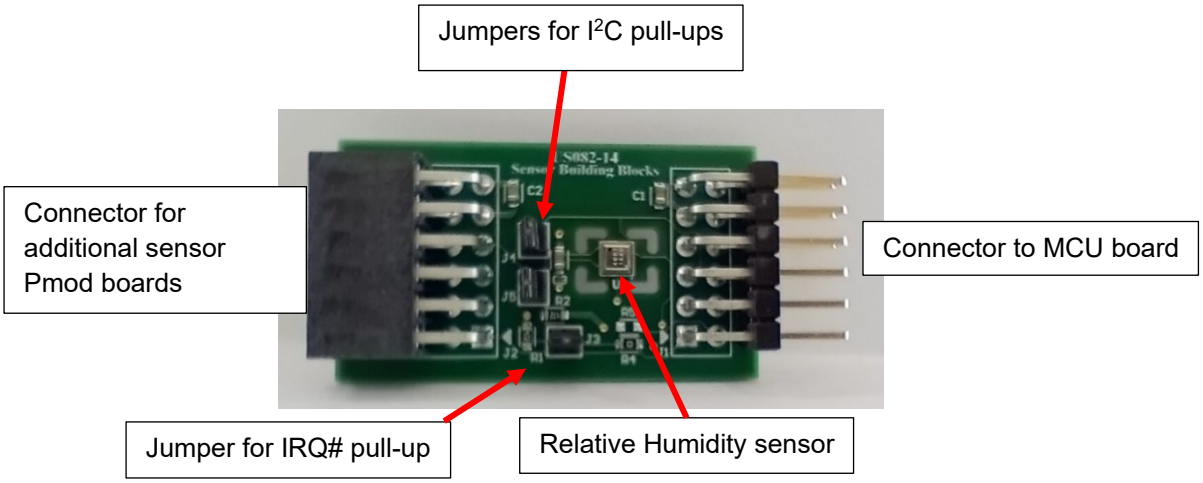

Figure 3. QCIOT-HS4001POCZ Pmod Board Features

2.2 Programming Interface

Programming of the system can be accomplished through Renesas' IDE, e2 studio. See the MCU evaluation kit documentation to set up the initial project in e2 studio. As the project is initialized, adding the HS4001 sensor to the project only takes a few steps.

1. Navigate to the FSP Configuration View / file. In the case shown in Figure 4, select the r_hs4001_rx.
2. Select the HS4001 Stack and edit the configuration values for required operation.
3. Click the Generate Code icon and the system generates the code to configure the sensor with the MCU.
4. Sample calls are shown in Figure 5. This shows the function to open the sensors, similar calls are required for the I²C bus. Review the manual related to FSP configuration and function APIs for additional information.

   Note: User is recommended to download and review Sample projects that are available on the Renesas website.

5. Use the data in your given application.

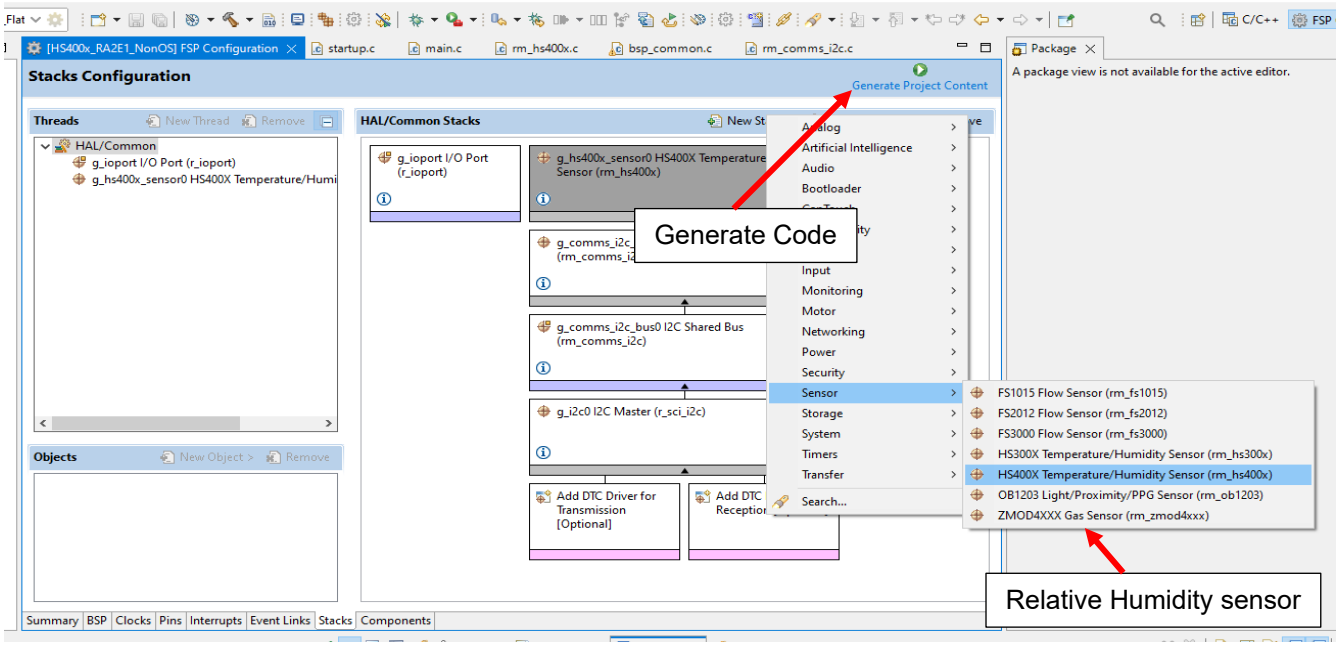

Figure 4. Stack Selection in Renesas e2 Studio

```
/* Quick setup for g_hs400x_sensor0. */
void g_hs400x_sensor0_quick_setup(void)
{
    fsp_err_t err;

    /* Open HS400X sensor instance, this must be done before calling any HS400X API */
    err = RM_HS400X_Open(g_hs400x_sensor0.p_ctrl, g_hs400x_sensor0.p_cfg);
    assert(FSP_SUCCESS == err);

}
```

Figure 5. Example Code to Start the Sensor after Configuration in FSP

For more information on creating your full system design, further information on software development, and additional hardware availability, visit the Renesas Quick-Connect IoT webpage.

3. QCIOT-HS4001POCZ Application Schematic

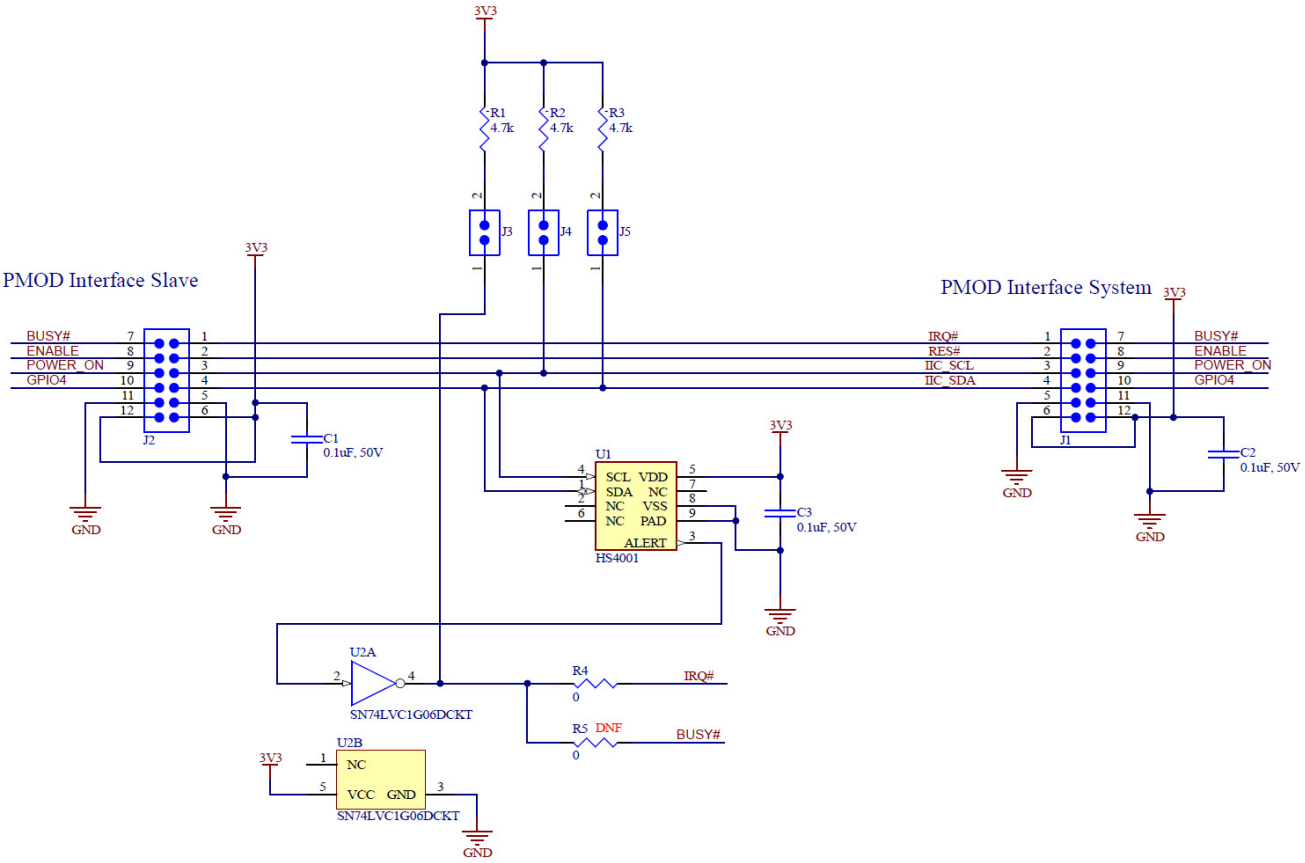

Figure 6. QCIOT-HS4001POCZ Application Schematic

4. Bill of Materials (BOM)

Qty	Reference Designator	Description	PCB Footprint	Manufacturer Part Number
4	C1, C2, C3	Capacitor, 0.1µF, 50V, 0603	0603	C0603C104J5RACTU
1	J1	Male Header 0.1" pitch PMOD 2x6 Right Angle, Pmod	PMOD-MALE-TOP	M20-9950645
1	J2	Female Header 0.1" pitch PMOD 2x6 Right Angle	CON-000050-01	SSW-106-02-F-D-RA
2	J3, J4, J5	CONN HEADER VERT 2POS 1.27 MM	HDR-1X2-FTS	FTS-102-01-L-S
2	R2, R3	Resistor, 4.7k, 0603	0603	RC0603JR-074K7L
1	U1	Relative Humidity Sensor	6-LGA_(3x2.41)	HS4001
-	U2	Open-Drain Inverter,	SOT-23-5	SN74LVC1G06DCKT
2	J3, J4, J5	1.27" 1x2 Jumper with Grip, Gold	-	NPB02SVFN-RC

5. Board Layout

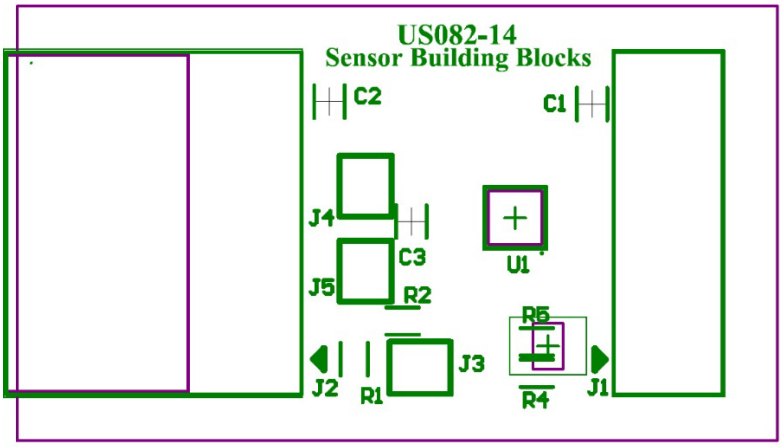

Figure 7. Silkscreen Top

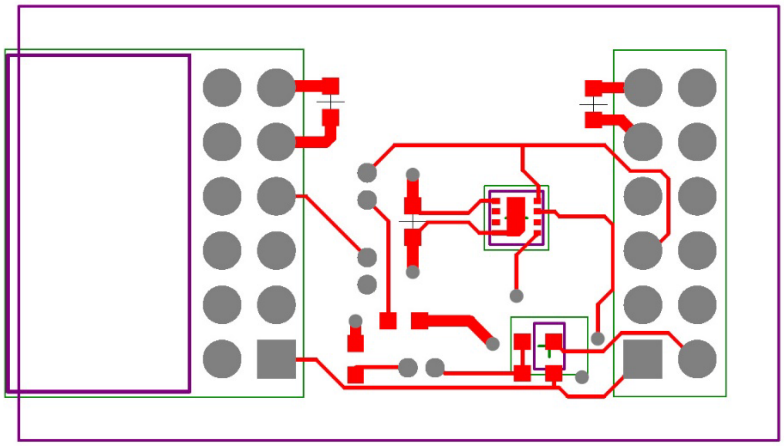

Figure 8. Copper Top

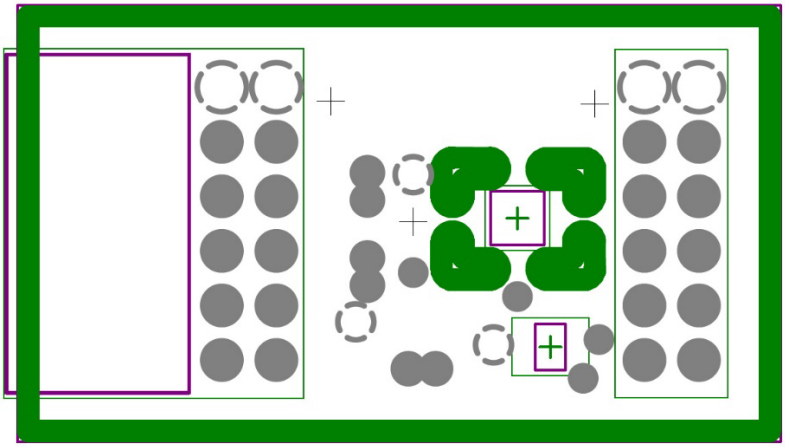

Figure 9. Copper L1 Layer

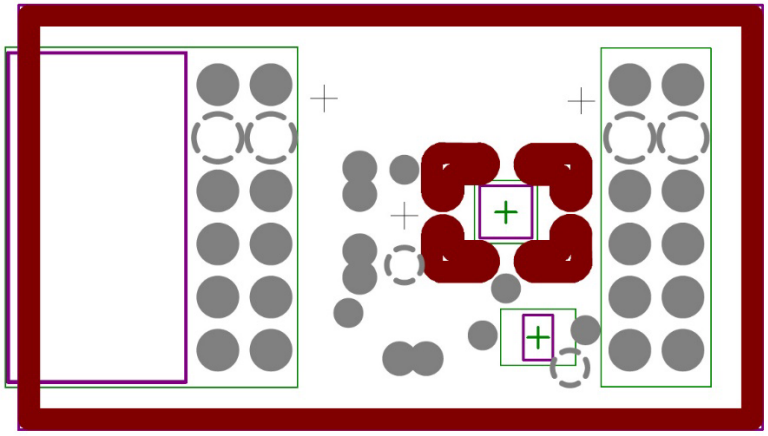

Figure 10. Copper L2 Layer

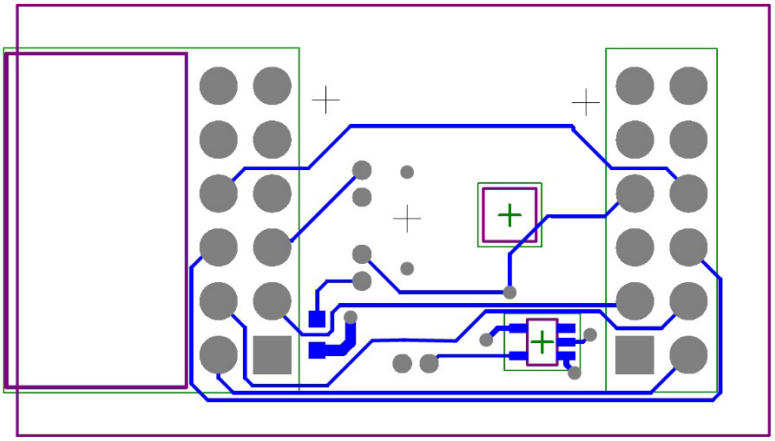

Figure 11. Copper Bottom

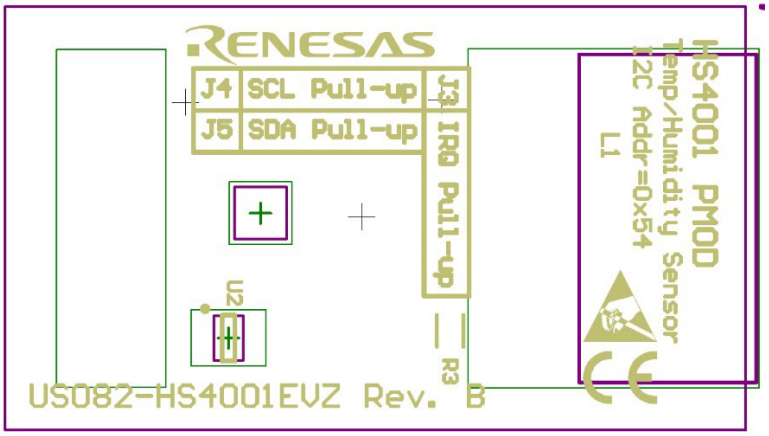

Figure 12. Silkscreen Bottom

6. Ordering Information

Part Number	Description
QCIOT-HS4001POCZ	HS4001 Pmod™ Board
US082-INTERPEVZ	Pmod™ Interposer Board to convert Type 2A and 3A to Type 6A on older Renesas MCU kits.

7. Revision History

Revision	Date	Description
1.00	Jun 22, 2022	Initial release.

IMPORTANT NOTICE AND DISCLAIMER

RENESAS ELECTRONICS CORPORATION AND ITS SUBSIDIARIES (“RENESAS”) PROVIDES TECHNICAL SPECIFICATIONS AND RELIABILITY DATA (INCLUDING DATASHEETS), DESIGN RESOURCES (INCLUDING REFERENCE DESIGNS), APPLICATION OR OTHER DESIGN ADVICE, WEB TOOLS, SAFETY INFORMATION, AND OTHER RESOURCES “AS IS” AND WITH ALL FAULTS, AND DISCLAIMS ALL WARRANTIES, EXPRESS OR IMPLIED, INCLUDING, WITHOUT LIMITATION, ANY IMPLIED WARRANTIES OF MERCHANTABILITY, FITNESS FOR A PARTICULAR PURPOSE, OR NON-INFRINGEMENT OF THIRD PARTY INTELLECTUAL PROPERTY RIGHTS.

These resources are intended for developers skilled in the art designing with Renesas products. You are solely responsible for (1) selecting the appropriate products for your application, (2) designing, validating, and testing your application, and (3) ensuring your application meets applicable standards, and any other safety, security, or other requirements. These resources are subject to change without notice. Renesas grants you permission to use these resources only for development of an application that uses Renesas products. Other reproduction or use of these resources is strictly prohibited. No license is granted to any other Renesas intellectual property or to any third party intellectual property. Renesas disclaims responsibility for, and you will fully indemnify Renesas and its representatives against, any claims, damages, costs, losses, or liabilities arising out of your use of these resources. Renesas' products are provided only subject to Renesas' Terms and Conditions of Sale or other applicable terms agreed to in writing. No use of any Renesas resources expands or otherwise alters any applicable warranties or warranty disclaimers for these products.

(Rev.1.0 Mar 2020)

Corporate Headquarters

TOYOSU FORESIA, 3-2-24 Toyosu,
Koto-ku, Tokyo 135-0061, Japan
www.renesas.com

Contact Information

For further information on a product, technology, the most up-to-date version of a document, or your nearest sales office, please visit:
www.renesas.com/contact/

Trademarks

Renesas and the Renesas logo are trademarks of Renesas Electronics Corporation. All trademarks and registered trademarks are the property of their respective owners.