Evaluation Board Manual

RX74M Group

MCB-RX74M Evaluation Board Manual

Renesas RX Family
RX700 Series

All information contained in these materials, including products and product specifications, represents information on the product at the time of publication and is subject to change by Renesas Electronics Corp. without notice. Please review the latest information published by Renesas Electronics Corp. through various means, including the Renesas Electronics Corp. website (http://www.renesas.com).

Renesas Electronics
www.renesas.com

Rev.1.00 Oct 15, 2026

Notice

1. Descriptions of circuits, software and other related information in this document are provided only to illustrate the operation of semiconductor products and application examples. You are fully responsible for the incorporation or any other use of the circuits, software, and information in the design of your product or system. Renesas Electronics disclaims any and all liability for any losses and damages incurred by you or third parties arising from the use of these circuits, software, or information.
2. Renesas Electronics hereby expressly disclaims any warranties against and liability for infringement or any other claims involving patents, copyrights, or other intellectual property rights of third parties, by or arising from the use of Renesas Electronics products or technical information described in this document, including but not limited to, the product data, drawings, charts, programs, algorithms, and application examples.
3. No license, express, implied or otherwise, is granted hereby under any patents, copyrights or other intellectual property rights of Renesas Electronics or others.
4. You shall be responsible for determining what licenses are required from any third parties, and obtaining such licenses for the lawful import, export, manufacture, sales, utilization, distribution or other disposal of any products incorporating Renesas Electronics products, if required.
5. You shall not alter, modify, copy, or reverse engineer any Renesas Electronics product, whether in whole or in part. Renesas Electronics disclaims any and all liability for any losses or damages incurred by you or third parties arising from such alteration, modification, copying or reverse engineering.
6. Renesas Electronics products are classified according to the following two quality grades: “Standard” and “High Quality”. The intended applications for each Renesas Electronics product depends on the product’s quality grade, as indicated below.
   "Standard": Computers; office equipment; communications equipment; test and measurement equipment; audio and visual equipment; home electronic appliances; machine tools; personal electronic equipment; industrial robots; etc.
   "High Quality": Transportation equipment (automobiles, trains, ships, etc.); traffic control (traffic lights); large-scale communication equipment; key financial terminal systems; safety control equipment; etc.
   Unless expressly designated as a high reliability product or a product for harsh environments in a Renesas Electronics data sheet or other Renesas Electronics document, Renesas Electronics products are not intended or authorized for use in products or systems that may pose a direct threat to human life or bodily injury (artificial life support devices or systems; surgical implantations; etc.), or may cause serious property damage (space system; undersea repeaters; nuclear power control systems; aircraft control systems; key plant systems; military equipment; etc.). Renesas Electronics disclaims any and all liability for any damages or losses incurred by you or any third parties arising from the use of any Renesas Electronics product that is inconsistent with any Renesas Electronics data sheet, Evaluation Kit Manual or Evaluation Board Manual or other Renesas Electronics document.
7. No semiconductor product is absolutely secure. Notwithstanding any security measures or features that may be implemented in Renesas Electronics hardware or software products, Renesas Electronics shall have absolutely no liability arising out of any vulnerability or security breach, including but not limited to any unauthorized access to or use of a Renesas Electronics product or a system that uses a Renesas Electronics product. RENESAS ELECTRONICS DOES NOT WARRANT OR GUARANTEE THAT RENESAS ELECTRONICS PRODUCTS, OR ANY SYSTEMS CREATED USING RENESAS ELECTRONICS PRODUCTS WILL BE INVULNERABLE OR FREE FROM CORRUPTION, ATTACK, VIRUSES, INTERFERENCE, HACKING, DATA LOSS OR THEFT, OR OTHER SECURITY INTRUSION (“Vulnerability Issues”). RENESAS ELECTRONICS DISCLAIMS ANY AND ALL RESPONSIBILITY OR LIABILITY ARISING FROM OR RELATED TO ANY VULNERABILITY ISSUES. FURTHERMORE, TO THE EXTENT PERMITTED BY APPLICABLE LAW, RENESAS ELECTRONICS DISCLAIMS ANY AND ALL WARRANTIES, EXPRESS OR IMPLIED, WITH RESPECT TO THIS DOCUMENT AND ANY RELATED OR ACCOMPANYING SOFTWARE OR HARDWARE, INCLUDING BUT NOT LIMITED TO THE IMPLIED WARRANTIES OF MERCHANTABILITY, OR FITNESS FOR A PARTICULAR PURPOSE.
8. When using Renesas Electronics products, refer to the latest product information (data sheets, Evaluation Kit Manuals, Evaluation Board Manuals, application notes, “General Notes for Handling and Using Semiconductor Devices” in the reliability handbook, etc.), and ensure that usage conditions are within the ranges specified by Renesas Electronics with respect to maximum ratings, operating power supply voltage range, heat dissipation characteristics, installation, etc. Renesas Electronics disclaims any and all liability for any malfunctions, failure or accident arising out of the use of Renesas Electronics products outside of such specified ranges.
9. Although Renesas Electronics endeavors to improve the quality and reliability of Renesas Electronics products, semiconductor products have specific characteristics, such as the occurrence of failure at a certain rate and malfunctions under certain use conditions. Unless designated as a high reliability product or a product for harsh environments in a Renesas Electronics data sheet or other Renesas Electronics document, Renesas Electronics products are not subject to radiation resistance design. You are responsible for implementing safety measures to guard against the possibility of bodily injury, injury or damage caused by fire, and/or danger to the public in the event of a failure or malfunction of Renesas Electronics products, such as safety design for hardware and software, including but not limited to redundancy, fire control and malfunction prevention, appropriate treatment for aging degradation or any other appropriate measures. Because the evaluation of microcomputer software alone is very difficult and impractical, you are responsible for evaluating the safety of the final products or systems manufactured by you.
10. Please contact a Renesas Electronics sales office for details as to environmental matters such as the environmental compatibility of each Renesas Electronics product. You are responsible for carefully and sufficiently investigating applicable laws and regulations that regulate the inclusion or use of controlled substances, including without limitation, the EU RoHS Directive, and using Renesas Electronics products in compliance with all these applicable laws and regulations. Renesas Electronics disclaims any and all liability for damages or losses occurring as a result of your noncompliance with applicable laws and regulations.
11. Renesas Electronics products and technologies shall not be used for or incorporated into any products or systems whose manufacture, use, or sale is prohibited under any applicable domestic or foreign laws or regulations. You shall comply with any applicable export control laws and regulations promulgated and administered by the governments of any countries asserting jurisdiction over the parties or transactions.
12. It is the responsibility of the buyer or distributor of Renesas Electronics products, or any other party who distributes, disposes of, or otherwise sells or transfers the product to a third party, to notify such third party in advance of the contents and conditions set forth in this document.
13. This document shall not be reprinted, reproduced or duplicated in any form, in whole or in part, without prior written consent of Renesas Electronics.
14. Please contact a Renesas Electronics sales office if you have any questions regarding the information contained in this document or Renesas Electronics products.

(Note1) “Renesas Electronics” as used in this document means Renesas Electronics Corporation and also includes its directly or indirectly controlled subsidiaries.
(Note2) “Renesas Electronics product(s)” means any product developed or manufactured by or for Renesas Electronics.

(Rev.5.0-1 October 2020)

Corporate Headquarters

TOYOSU FORESIA, 3-2-24 Toyosu,
Koto-ku, Tokyo 135-0061, Japan
www.renesas.com

Trademarks

Renesas and the Renesas logo are trademarks of Renesas Electronics Corporation. All trademarks and registered trademarks are the property of their respective owners.

Contact information

For further information on a product, technology, the most up-to-date version of a document, or your nearest sales office, please visit: www.renesas.com/contact/.

General Precautions in the Handling of Microprocessing Unit and Microcontroller Unit Products

The following usage notes are applicable to all Microprocessing unit and Microcontroller unit products from Renesas. For detailed usage notes on the products covered by this document, refer to the relevant sections of the document as well as any technical updates that have been issued for the products.

1. Precaution against Electrostatic Discharge (ESD)

   A strong electrical field, when exposed to a CMOS device, can cause destruction of the gate oxide and ultimately degrade the device operation. Steps must be taken to stop the generation of static electricity as much as possible, and quickly dissipate it when it occurs. Environmental control must be adequate. When it is dry, a humidifier should be used. This is recommended to avoid using insulators that can easily build up static electricity. Semiconductor devices must be stored and transported in an anti-static container, static shielding bag or conductive material. All test and measurement tools including work benches and floors must be grounded. The operator must also be grounded using a wrist strap. Semiconductor devices must not be touched with bare hands. Similar precautions must be taken for printed circuit boards with mounted semiconductor devices.
2. Processing at power-on

   The state of the product is undefined at the time when power is supplied. The states of internal circuits in the LSI are indeterminate and the states of register settings and pins are undefined at the time when power is supplied. In a finished product where the reset signal is applied to the external reset pin, the states of pins are not guaranteed from the time when power is supplied until the reset process is completed. In a similar way, the states of pins in a product that is reset by an on-chip power-on reset function are not guaranteed from the time when power is supplied until the power reaches the level at which resetting is specified.
3. Input of signal during power-off state

   Do not input signals or an I/O pull-up power supply while the device is powered off. The current injection that results from input of such a signal or I/O pull-up power supply may cause malfunction and the abnormal current that passes in the device at this time may cause degradation of internal elements. Follow the guideline for input signal during power-off state as described in your product documentation.
4. Handling of unused pins

   Handle unused pins in accordance with the directions given under handling of unused pins in the manual. The input pins of CMOS products are generally in the high-impedance state. In operation with an unused pin in the open-circuit state, extra electromagnetic noise is induced in the vicinity of the LSI, an associated shoot-through current flows internally, and malfunctions occur due to the false recognition of the pin state as an input signal become possible.
5. Clock signals

   After applying a reset, only release the reset line after the operating clock signal becomes stable. When switching the clock signal during program execution, wait until the target clock signal is stabilized. When the clock signal is generated with an external resonator or from an external oscillator during a reset, ensure that the reset line is only released after full stabilization of the clock signal. Additionally, when switching to a clock signal produced with an external resonator or by an external oscillator while program execution is in progress, wait until the target clock signal is stable.
6. Voltage application waveform at input pin

   Waveform distortion due to input noise or a reflected wave may cause malfunction. If the input of the CMOS device stays in the area between V_{IL} (Max.) and V_{IH} (Min.) due to noise, for example, the device may malfunction. Take care to prevent chattering noise from entering the device when the input level is fixed, and also in the transition period when the input level passes through the area between V_{IL} (Max.) and V_{IH} (Min.).
7. Prohibition of access to reserved addresses

   Access to reserved addresses is prohibited. The reserved addresses are provided for possible future expansion of functions. Do not access these addresses as the correct operation of the LSI is not guaranteed.
8. Differences between products

   Before changing from one product to another, for example to a product with a different part number, confirm that the change will not lead to problems. The characteristics of a microprocessing unit or microcontroller unit products in the same group but having a different part number might differ in terms of internal memory capacity, layout pattern, and other factors, which can affect the ranges of electrical characteristics, such as characteristic values, operating margins, immunity to noise, and amount of radiated noise. When changing to a product with a different part number, implement a system-evaluation test for the given product.

© 2026 Renesas Electronics Corporation. All rights reserved.

For Your Safety

Be sure to read the precautions and instructions in this manual before using this product.

Meaning of Notations

In this manual, items related to the safe use of the product are indicated as described below.
The degree of injury to persons or damage to property that could result if the designated content in this manual is not followed is indicated as follows.

⚠ Danger	Indicates content that, if not followed, could result in death or serious injury to the user, and which is highly urgent.
⚠ Warning	Indicates content that, if not followed, could result in death or serious injury to the user.
⚠ Caution	Indicates content that, if not followed, could result in injury to persons or physical damage.

Warnings Regarding Use of the Product

■ Danger Items

⚠ Danger	
	• The product should be used only by persons (users) having a thorough knowledge of electrical and mechanical components and systems, a full knowledge of the risks associated with handling them, and training in inverter motor control and handling motors, or equivalent skills. Users should be limited to persons who have carefully read the Caution Items contained in this manual. • The product contains high-temperature components that could be dangerous. Do not touch the product or cables while power is being supplied. • Carefully check to make sure that there are no pieces of conductive materials or dust adhering to the board, connectors, and cables. • Do not touch the motor while power is being supplied. • Ensure that the motor is insulated and placed in a stable location before supplying power.

■ Warning Items

Warning	
	Always insert plugs, connectors, and cables securely, and confirm that they are fully inserted. Incomplete connections could cause fire, burns, electric shock, or injury.
	Use the power supply apparatus specified in the manual. Failure to do so could cause fire, burns, electric shock, injury, or malfunction.
	Disconnect the power supply and unplug all cables when the system will not be used for a period of time or when moving the system. Failure to do so could cause fire, burns, electric shock, or malfunction. This will protect the system against damage due to lightning.
	Use a mechanism (switch, outlet, etc.) located within reach to turn off (disconnect) the power supply. In case of emergency, it may be necessary to cut off the power supply quickly.
	In this product, the ground of the main power supply circuit is connected to the ground of the CPU board. When the user evaluates the product, be aware that the product and the measuring instruments may be damaged depending on the connection method of the measuring instruments.
	Turn off the power supply immediately if you notice abnormal odor, smoke, abnormal sound, or overheating. Continuing to use the system in an abnormal condition could cause fire, burns, or electric shock.
	Do Not Disassemble, Modify, or Repair! Doing so could cause fire, burns, electric shock, injury, or malfunction.
	Do not use the product for any purpose other than initial evaluation of motor control in a testing room or lab. Do not integrate the product or any part of it into other equipment. Do not insert or remove cables or connectors when the product is powered on. The product has no safety case. The user must cover the product for safety protection. Failure to observe the above could cause fire, electric shock, burns, or malfunction. The product may not perform as expected if used for other than its intended purpose.

■ Caution Items

Caution	
	Caution – Hot! The motor gets hot. Touching it could cause high-temperature burns.
	Follow the procedure specified in the manual when powering the system on or off. Failure to do so could cause overheating or malfunction.
	Caution – Static Electricity Use the antistatic band. Failure to do so could cause malfunction or unstable motion.

Renesas RX Family

MCB-RX74M Evaluation Board Manual

Contents

1. Overview 5
1.1 Presupposition and precautions of this document 5

2. Product Contents 6

3. Product Order Information 6

4. Hardware Configuration and Default Setting 7
4.1 Hardware configuration 7
4.2 Block diagram 8
4.3 Board Layout 9
4.4 Standoffs and Screws 9
4.5 Jumper pin setting 10
4.6 Hardware Setup 11
4.6.1 Board Connection 11

5. CPU Board Specification 12
5.1 Functions 12
5.1.1 Power supply 12
5.1.2 Onboard debugger 12
5.1.3 External emulator connector 13
5.1.4 Reset circuit 13
5.1.5 Inverter board connector circuit 14
5.1.6 Serial communication 18
5.1.7 SPI Communication 18
5.1.8 Pmod 18
5.1.9 CAN communication 19
5.1.10 User controllable LED 19
5.1.11 DSMIF circuit 20
5.1.12 EtherCAT circuit 20
5.1.13 Test points 22
5.1.14 Pin function list 24

6. Regulatory information 30
6.1 EMC Directive 30
6.2 Material Selection, Waste, Recycling and Disposal Standards 30

7. Design and Manufacture Information 30

8. Website and Support 30

Revision History 31

List of figures

Figure 2-1 Product contents 6
Figure 4-1 MCB-RX74M block diagram 8
Figure 4-2 CPU Board Layout 9
Figure 4-3 Standoffs and Screws assembly 9
Figure 4-4 Default jumper pin setting of CPU board 10
Figure 4-5 Board connection (from DC jack) 11
Figure 4-6 Power supply from USB connector 11
Figure 5-1 Jumper setting of JP8 12
Figure 5-2 EtherCAT Connector (CN7) Configuration 20
Figure 5-3 Test points 22

List of tables

Table 4-1 CPU board specification 7
Table 4-2 Jumper pins setting of CPU board 10
Table 5-1 External emulator connector(CN5) pin assignment 13
Table 5-2 1st Inverter board connector (CN1) pin assignment 14
Table 5-3 1st Inverter board connector (CN2) pin assignment 15
Table 5-4 2nd Inverter board connector (CN3) pin assignment 16
Table 5-5 2nd Inverter board connector (CN4) pin assignment 17
Table 5-6 SCI connector (CN8) pin assignment 18
Table 5-7 SPI connector (CN9) pin assignment 18
Table 5-8 Pmod 3A connector (CN10) pin assignment 18
Table 5-9 Pmod 6A connector (CN12) pin assignment 18
Table 5-10 CAN connector (CN15), CAN Driver (U9) pin assignment 19
Table 5-11 User controllable LED (INV1) pin assignment 19
Table 5-12 User controllable LED (INV2) pin assignment 19
Table 5-13 DSMIF0 connector (CN11) pin assignment 20
Table 5-14 DSMIF1 connector (CN13) pin assignment 20
Table 5-15 EtherCAT test connector (CN6) pin assignment 21
Table 5-16 LED for EtherCAT (GPIO control) pin assignment 21
Table 5-17 LED for EtherCAT (IP control) pin assignment 21
Table 5-18 LED for EtherCAT (EtherCAT connector) pin assignment 21
Table 5-19 Test points 23
Table 6-20 RX74M pin function list 24

1. Overview

MCB-RX74M is a CPU board for motor control evaluation. By using this product in combination with an inverter board, motor control using RX74M can be easily performed.

1.1 Presupposition and precautions of this document

1. Experience of using tools: This document assumes that the user has used terminal emulation program of Integrated Development Environment (IDE) such as e^2 studio before. *1
2. Knowledge about the development subject: This document assumes that the user has a basic knowledge to modify the sample project regarding MCU and embedded system.
3. Before using this product, wear an antistatic wrist strap. If you touch this product with static charge on your body, a device failure may occur, or operation may become unstable.
4. All screen shots provided in this document is for reference. Actual screen displays may differ depending on the software and development tool version which you use.
5. The onboard debugger circuit on this product does not have electric isolation. *1 For evaluations of motor drive operation, please use the communication board (MC-COM) to connect to the PC and use the Renesas Motor Workbench development support tool. Because the communication board is equipped with an isolator, isolation between the PC and this product is ensured. Furthermore, Renesas Motor Workbench allows variables to be read and written without stopping the MCU, enabling safe evaluation and debugging of motor drive operation. *2

*1 When using the onboard debugger, this product and the PC share a common GND. In that case, supplying external power to the inverter board or driving the motor may damage the board or the PC.
*2 If the MCU is stopped by the debugger while the motor is running, the MOSFETs on the inverter board may remain ON (conducting state), which may result in damage to the motor or the inverter board.

2. Product Contents

This kit consists of the following parts.
1. CPU Board (RTK0EMXFN0C00000BJ) x1
2. Screw x4
3. Standoff x4

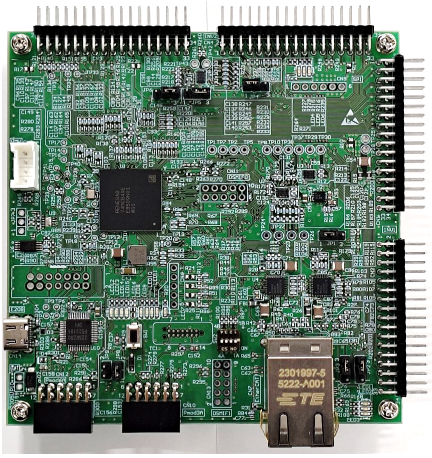

(1) CPU board

(2) Screw
(3) Stand-off

Figure 2-1 Product contents

3. Product Order Information

Product number for ordering item	Included item
RTK0EMXFN0C00000BJ (MCB-RX74M)	CPU Board (RTK0EMXFN0C00000BJ)
RTK0EM0000S04020BJ (MCI-LV-1)	Inverter Board (RTK0EM0000B12020BJ) Brushless DC Motor (R42BLD30L3)
RTK0EMXC90S00000BJ (MC-COM)	Communication board (RTK0EMXC90Z00000BJ) Communication cable USB cable

4. Hardware Configuration and Default Setting

4.1 Hardware configuration

The specifications of the CPU board are shown below.

Table 4-1 CPU board specification

item		Specification
Product name		CPU Board
Board part No.		RTK0EMXFN0C00000BJ
Compatible inverter board		RTK0EM0000B12020BJ
External view		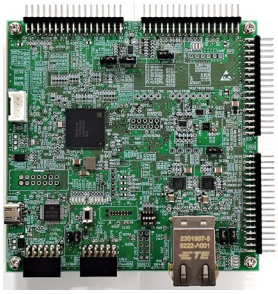 Note: The actual product may differ from this photo.
Mounted MCU	Product group	RX74M group
	Product No.	R5K574MCB4AE
	CPU maximum operating frequency	600MHz
	Bit count	32bit
	Package / Pin count	LFBGA / 320pin
	ROM / RAM	1MB / 1.5MB
MCU input clock		24MHz (Generate with external crystal oscillator)
Power supply		DC 5V Select one way automatically from the below • Power is supplied from compatible inverter board • Power is supplied from USB connector
Debugger		E2OB (Onboard debugger circuit)
Connector		• USB connector for E2OB and power supply (Type-C) • External emulator connector * • Inverter board connector (2 pair) • SCI connector (for Renesas Motor Workbench communication) • SPI connector * • Pmod 3A connector • Pmod 6A connector • CAN connector * • DSMIF connector (2 pair) * • EtherCAT connector / EtherCAT test connector *
Switch		Reset switch
LED		User controllable LED x6, Power LED x1, EtherCAT LED x9 (include DNF)
Board size		109mm (W) x 109mm (L)
Operating temperature		Room temperature
Operating humidity		No condensation allowed
EMC Directive		EN61326-1:2021 EMI：Class A EMS：Industrial electromagnetic environment

* Not implemented

4.2 Block diagram

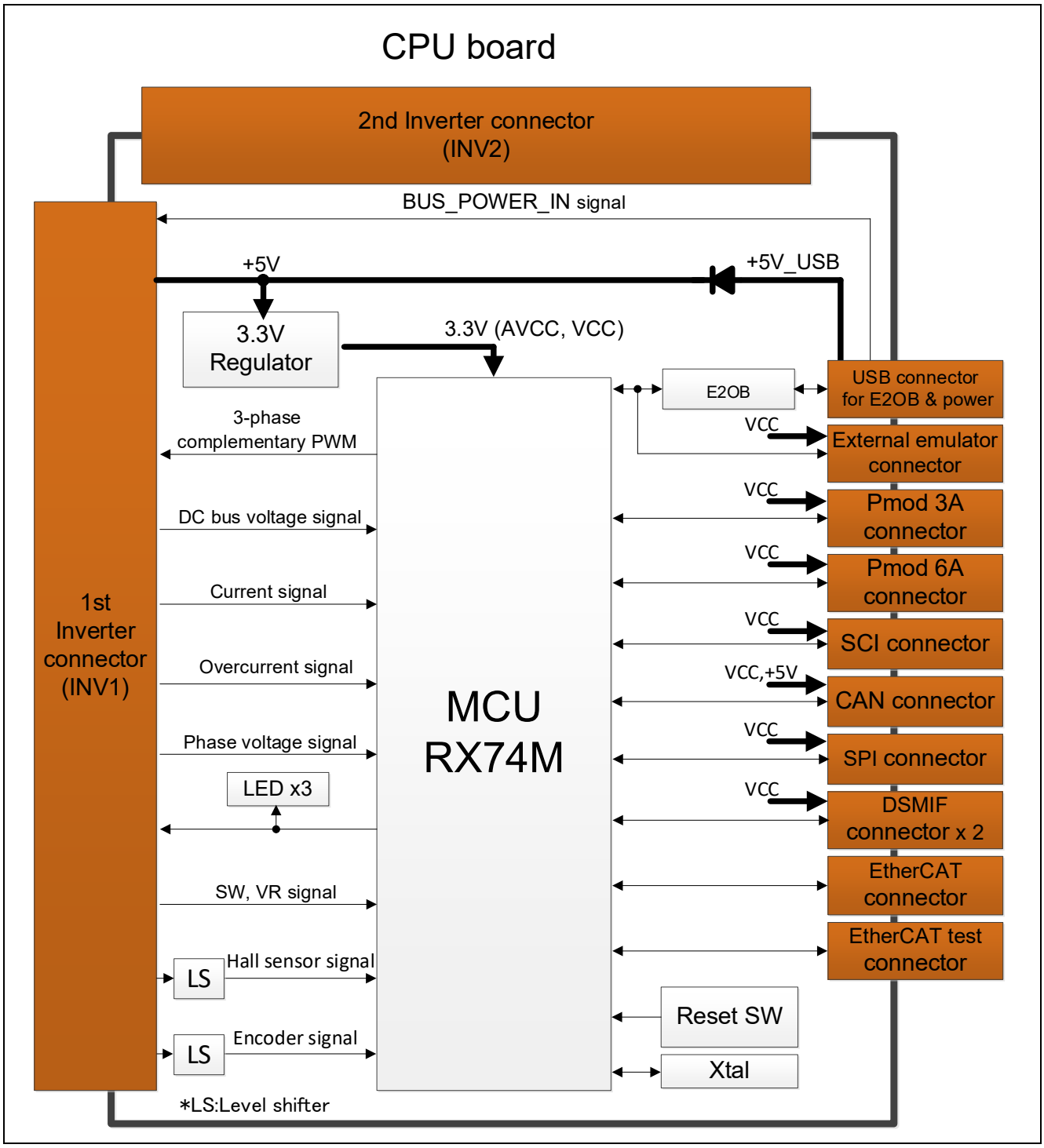

Figure 4-1 MCB-RX74M block diagram

4.3 Board Layout

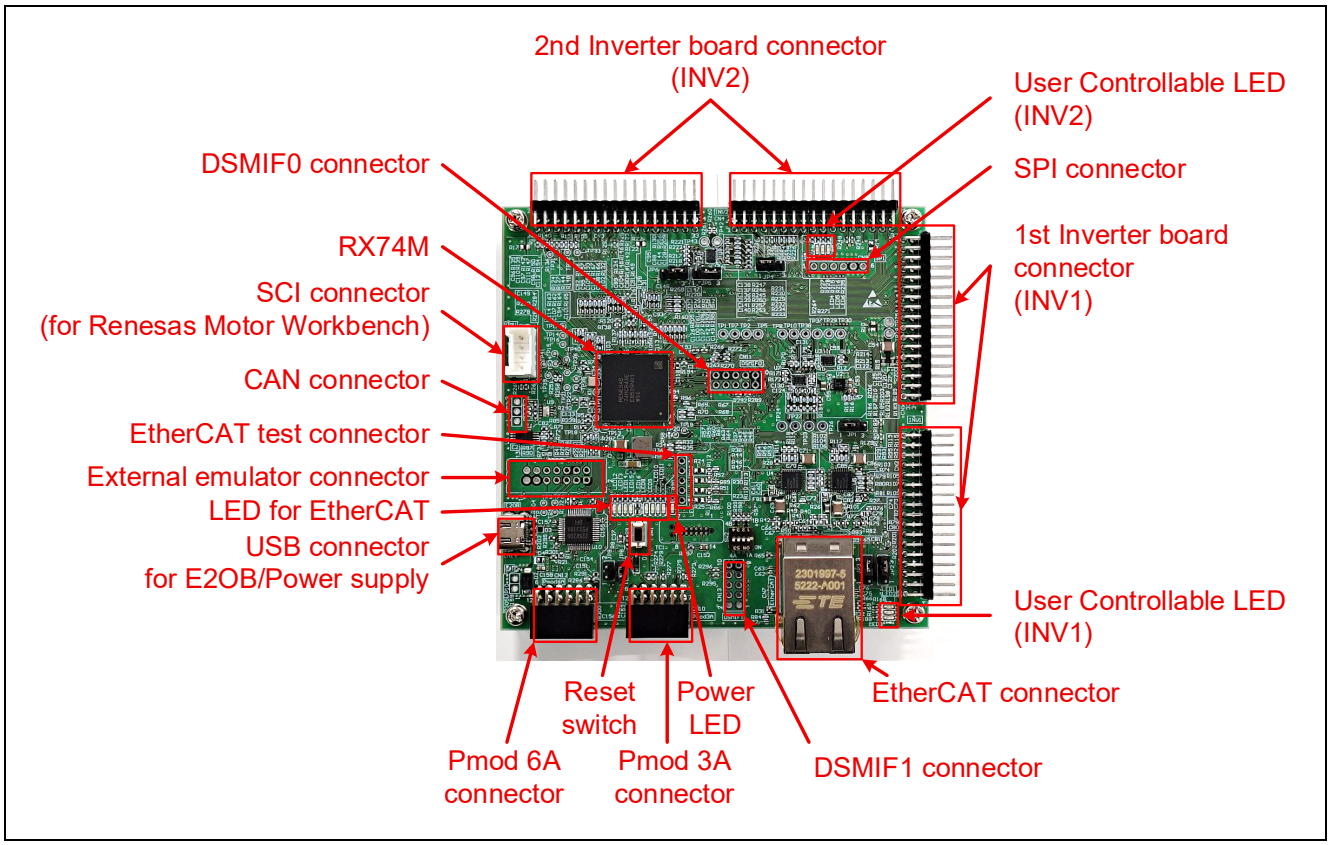

Figure 4-2 CPU Board Layout

4.4 Standoffs and Screws

Before using this product, assemble the included standoffs and screws as shown below.

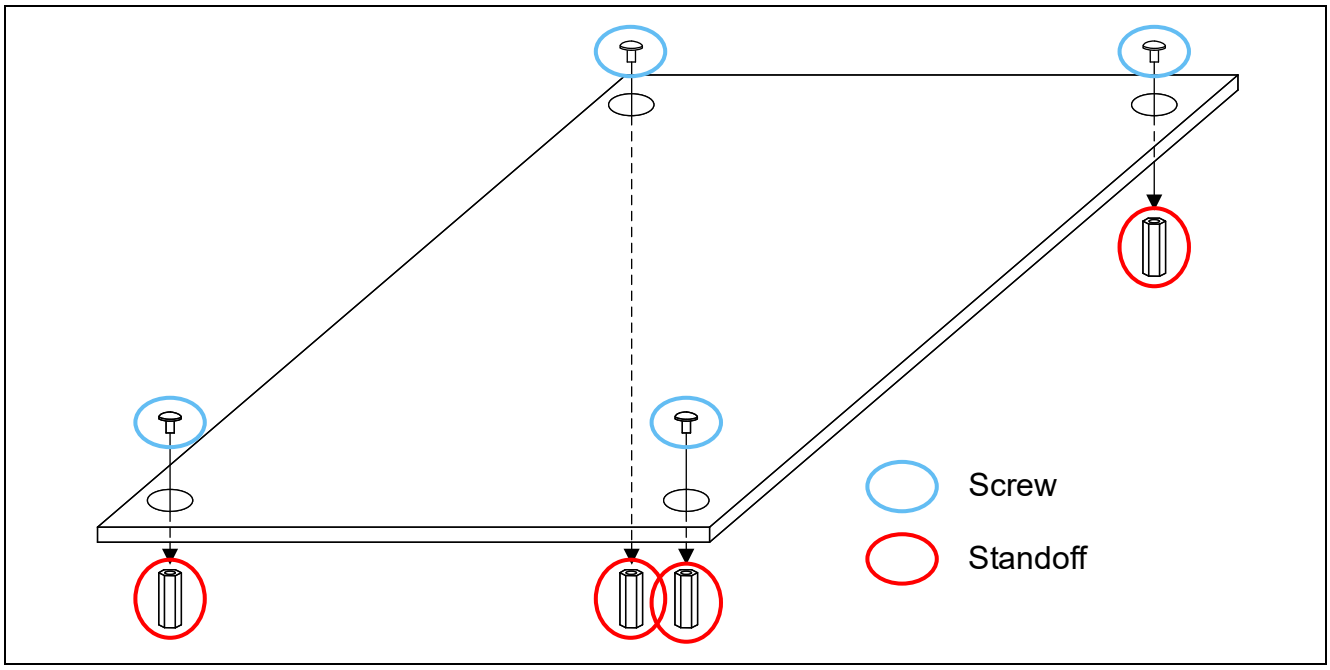

Figure 4-3 Standoffs and Screws assembly

4.5 Jumper pin setting

Default settings and functions of the jumper pins are as follows.

Table 4-2 Jumper pins setting of CPU board

Jumper pin	Default setting	Function
JP1	1-2 pin short	1-2 pin short : INV1 PFC_PWM2 2-3 pin short : INV1 MOSI
JP2	2-3 pin short	1-2 pin short : INV1 IPS_A 2-3 pin short : INV1 ENC_A
JP3	2-3 pin short	1-2 pin short : INV1 IPS_B 2-3 pin short : INV1 ENC_B
JP4	1-2 pin short	1-2 pin short : INV2 PFC_PWM2 2-3 pin short : INV2 MOSI
JP5	2-3 pin short	1-2 pin short : INV2 IPS_A 2-3 pin short : INV2 ENC_A
JP6	2-3 pin short	1-2 pin short : INV2 IPS_B 2-3 pin short : INV2 ENC_B
JP8	1-2 pin short	1-2 pin open : On board debugger valid 1-2 pin short : On board debugger invalid *1

*1 For use in single-chip mode, or for use with emulators other than E2OB.

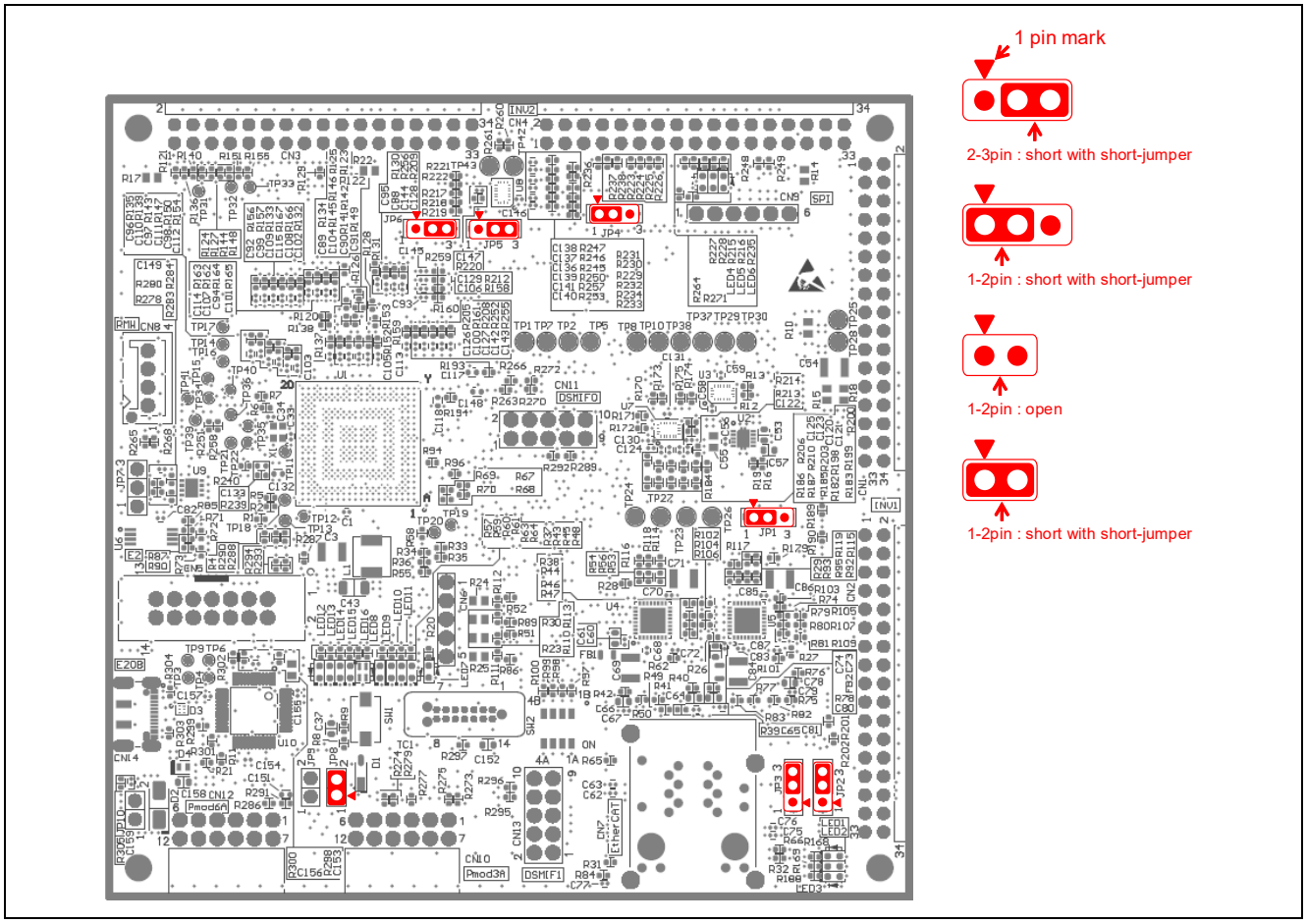

Figure 4-4 Default jumper pin setting of CPU board

4.6 Hardware Setup

4.6.1 Board Connection

Figure 4-5 and Figure 4-6 show connection examples when using this product with the inverter board kit (product name: MCI-LV-1, model name: RTK0EM0000S04020BJ) and the communication board (product name: MC-COM, model name: RTK0EMXC90S00000BJ).

When supplying the power from USB port, use a USB adapter capable of providing at least 1A output to ensure sufficient motor drive capability.

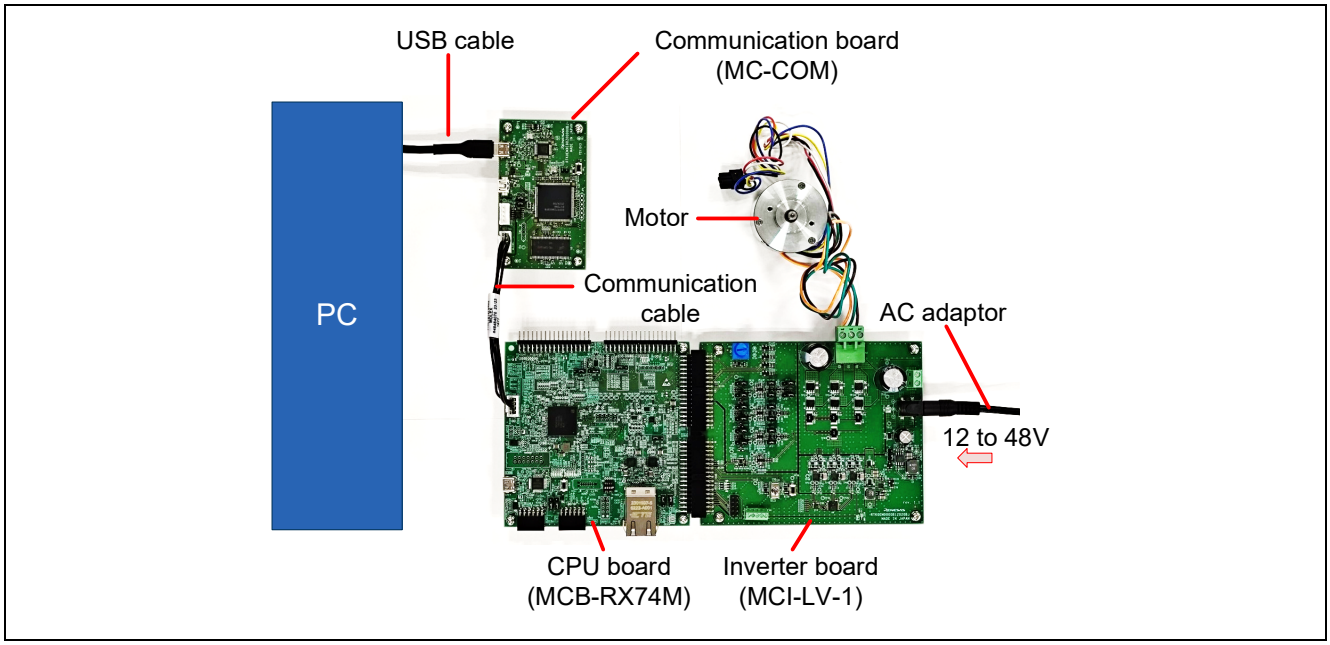

Figure 4-5 Board connection (from DC jack)

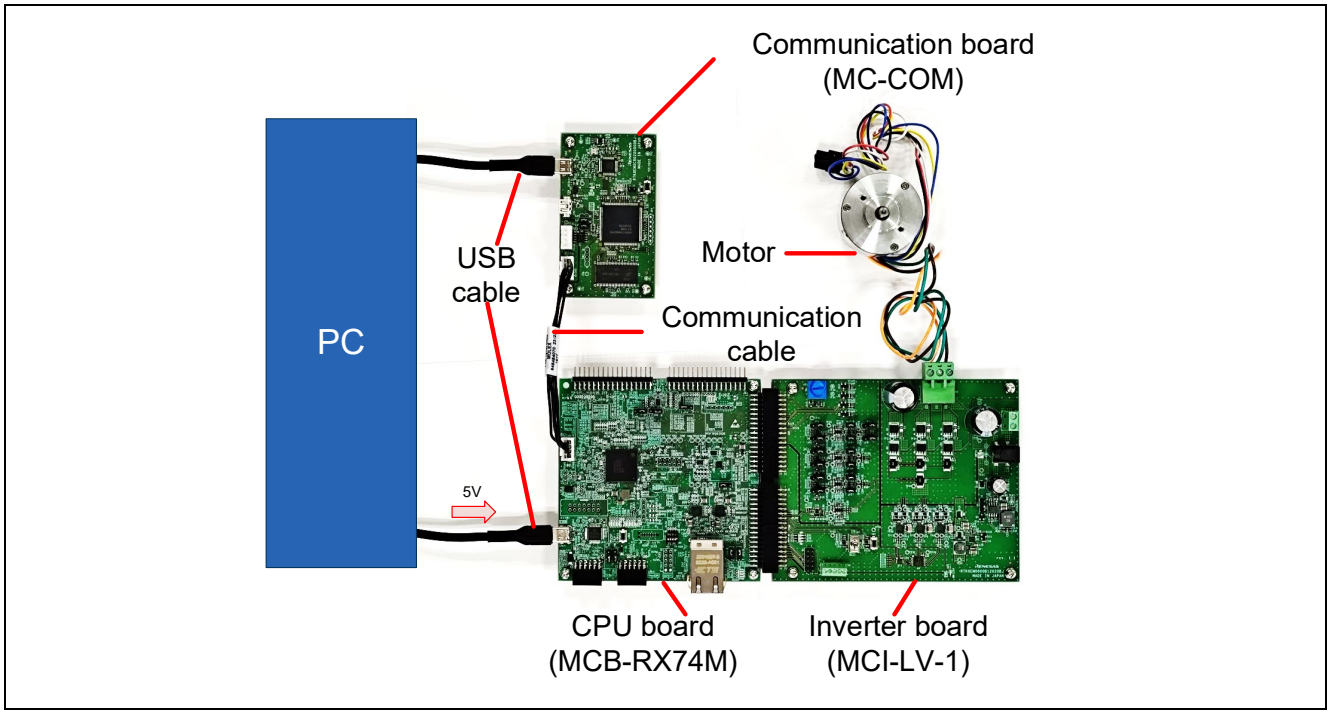

Figure 4-6 Power supply from USB connector

5. CPU Board Specification

This section describes the specification of the CPU Board.

5.1 Functions

5.1.1 Power supply

When not connected to the inverter board, power should be supplied from the USB connector (CN14). When connecting to the inverter board, power supply from the USB connector or from the inverter board will be automatically selected. USB power supply has priority. By supplying power, the 3.3V regulator operates, supplying 3.3V to VCC, and turns on LED7.

5.1.2 Onboard debugger

This product has the on-board debugger circuit, E2 On-Board (hereinafter called “E2OB”). You can write a program (firmware) of RX74M with it. When you write a program, open (remove) JP8 and connect the CPU board to PC with USB cable. E2OB operates as debugger equivalent to E2 emulator Lite. After writing a program, short JP8 for CPU board operation. E2OB become invalid, and it operates in single-chip mode.
When using from Integrated Development Environment (e.g. e²studio) or flash programming tool (e.g. Renesas Flash Programmer), set the type of debugger (tool) to “E2 emulator Lite”.
After writing a program, short JP8 for CPU board operation.
*When using the debugger, please make sure to carefully review the contents of “1.1 Presupposition and precautions of this document”.

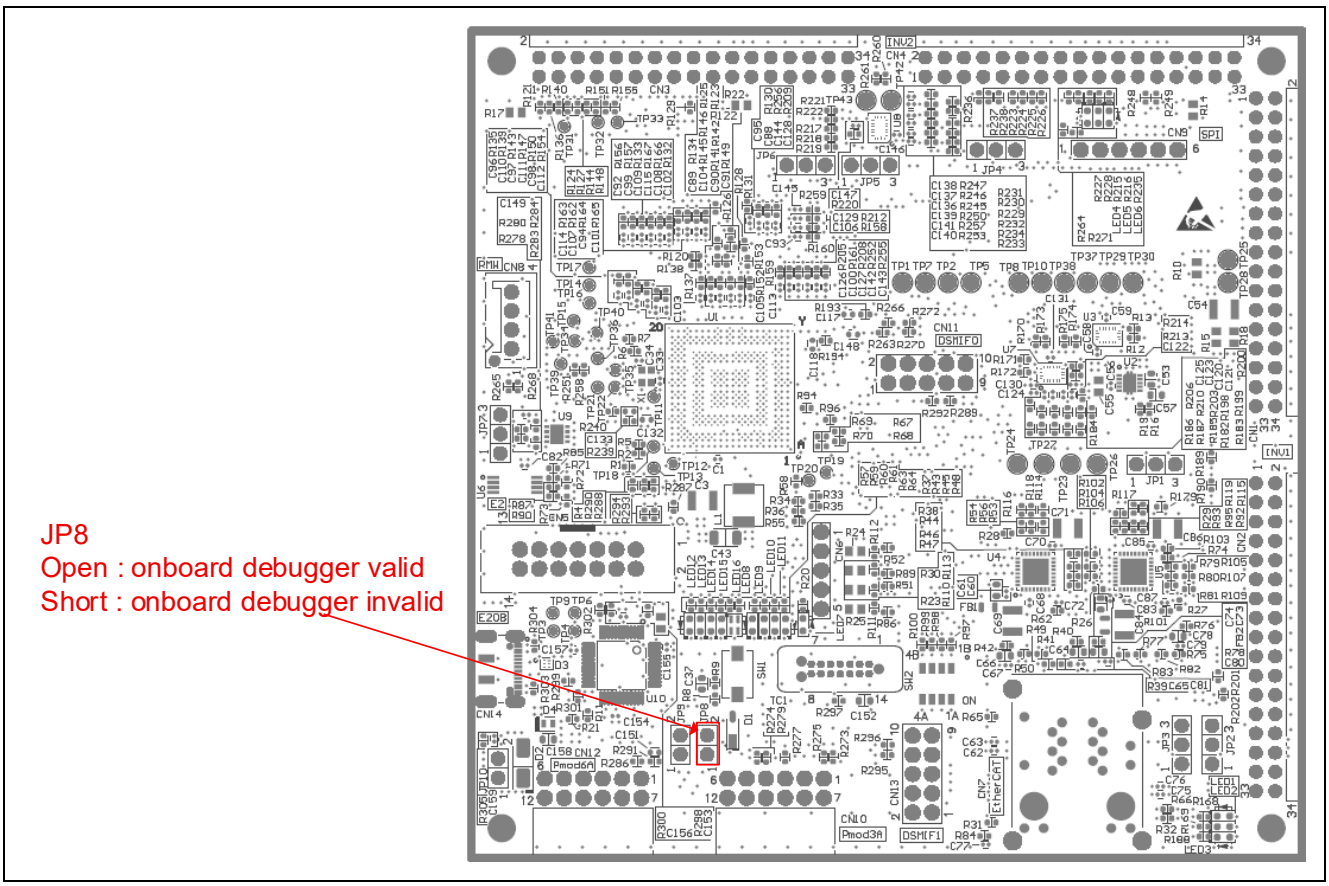

Figure 5-1 Jumper setting of JP8

5.1.3 External emulator connector

This product E2OB circuit, but external emulators such as E2 or E2-Lite can also be used.
The pin assignments of the external emulator connector are shown in Table 5-1.
*When using the debugger, please make sure to carefully review the contents of “1.1 Presupposition and precautions of this document”.

Table 5-1 External emulator connector(CN5) pin assignment

Pin No.	Emulator	RX74M pin	Pin No.	Emulator	RX74Mpin
1	TCK	P301/TCK	2	GND	- (VSS)
3	TRST#	- (NC)	4	EMLE	- (NC)
5	TDO	P302/TDO/TXD001-A	6	NC	- (NC)
7	MD/FINED	P315/MD/FINED	8	VCC	- (VCC)
9	TMS	P300/TMS	10	UD	- (NC)
11	TDI	P303/TDI/RXD001-A	12	GND	- (VSS)
13	RES#	RES#	14	GND	- (VSS)

5.1.4 Reset circuit

This product has a reset circuit to enable power-on reset or external reset on MCU. Push the tact switch (SW1) to externally reset MCU.

5.1.5 Inverter board connector circuit

This product supports connection of two inverter boards. Connect to the 1st inverter board (INV1) with CN1 and CN2, and connect to the 2nd inverter board (INV2) with CN3 and CN4. The pin assignments of the inverter board connectors are shown in Table 5-2, Table 5-3, Table 5-4, Table 5-5.

Table 5-2 1st Inverter board connector (CN1) pin assignment

Pin No.	Pin Function	RX74M Pin	Pin No.	Pin Function	RX74M Pin
1	TEMPERATURE	P406/AN006	2	AGND	- (AVSS)
3	VDC (BUS_VOLTAGE)	P408/AN008	4	AGND	- (AVSS)
5	IU (U_CURRENT/ 1-SHUNT_CURRENT)	P400/AN000	6	IU (U_CURRENT (G)/ 1-SHUNT_CURRENT (G))	(P401/AN001) *1
7	IV (V_CURRENT)	P402/AN002	8	IV (V_CURRENT (G))	(P403/AN003) *1
9	IW (W_CURRENT)	P404/AN004	10	IW (W_CURRENT (G))	(P405/AN005) *1
11	VU (U_VOLTAGE)	P006/AN022	12	VV (V_VOLTAGE)	PD00/AN024
13	VW (W_VOLTAGE)	PD02/AN026	14	AGND	- (AVSS)
15	VAC (VPFC)	P410/AN010	16	IPFC1	P412/AN012
17	VR/IPFC2	P414/AN014	18	AGND	- (AVSS)
19	AVCC	- (AVCC)	20	AVCC	- (AVCC)
21	AGND	- (AVSS)	22	AGND	- (AVSS)
23	VCC	- (VCC)	24	VCC	- (VCC)
25	DGND	- (VSS)	26	DGND	- (VSS)
27	PWM_UL	PE01/GTIOC7B	28	DGND	- (VSS)
29	PWM_UH	PE00/GTIOC7A	30	DGND	- (VSS)
31	PWM_VL	PE03/GTIOC8B	32	DGND	- (VSS)
33	PWM_VH	PE02/GTIOC8A	34	DGND	- (VSS)

*1 Exclusively assigned by jumper register setting
*2 Available functions are limited depending on the inverter board type.

IPS : Inductive Position Sensor
PFC : Power Factor Correction
ENC : Encoder

Table 5-3 1st Inverter board connector (CN2) pin assignment

Pin No.	Pin Function	RX74M Pin	Pin No.	Pin Function	RX74M Pin
1	PWM_WL	PE05/GTIOC9B	2	DGND	- (VSS)
3	PWM_WH	PE04/GTIOC9A	4	DGND	- (VSS)
5	DRV_SCK (SCK)	P601/RSPCK0-D	6	PWM_PFC2	P607/GTIOC15B *1
				DRV_RXD (MOSI)	(P602/MOSI0-D) *1
7	DRV_TXD (MISO)	P603/MISO0-D	8	DRV_CS (CS)	PF07/SSL03-C
9	BUS_POWER_IN1	-	10	INV_CONNECTED	P904/GPIO/IRQ12
11	SAFE_INTERLOCK	P905/GPIO/IRQ13	12	OC (INVERTER)	P711/GTETRGB/IRQ19
13	OC (PFC)	PG15/GPIO/IRQ31	14	PWM_PFC1/ DRV_EN	PE06/GTIOC10A
15	RELAY_IN/ CON_MOT_SEL	P907/GPIO	16	SW1	P803/GPIO/IRQ3
17	SW2/ OVER_TEMPERATURE	P506/GPIO/IRQ6	18	LED1	P508/GPIO
19	LED2	P510/GPIO	20	LED3	P511/GPIO
21	HALL_U	P714/GPIO/IRQ22	22	HALL_V	P715/GPIO/IRQ23
23	HALL_W	PG08/GPIO/IRQ24	24	IPS_SIO_SDA (SDA)	P107/SDAHS2-A
25	IPS_SCK_SCL (SCL)	P106/SCLHS2-A	26	IPS_CSN_IRQN/ ENC_Z	P708/GTETRGC/IRQ16 *1
				(PCIF Z Phase)	(P210/PCINZ1) *1
27	IPS_A	(PD04/AN028) *1	28	IPS_A#	PD06/AN030
	ENC_A	P712/GTIOC14A *1			
	(PCIF_A)	(P208/PCINA1) *1			
29	IPS_B	(P900/AN032) *1	30	IPS_B#	P902/AN034
	ENC_B	P713/GTIOC14B *1			
	(PCIF_B)	(P209/PCINB1) *1			
31	5V_GND	- (VSS)	32	5V_GND	- (VSS)
33	+5V	-	34	+5V	-

*1 Exclusively assigned by jumper register setting
*2 Available functions are limited depending on the inverter board type.

Table 5-4 2nd Inverter board connector (CN3) pin assignment

Pin No.	Pin Function	RX74M Pin	Pin No.	Pin Function	RX74M Pin
1	TEMPERATURE	P407/AN007	2	AGND	- (AVSS)
3	VDC (BUS_VOLTAGE)	P409/AN009	4	AGND	- (AVSS)
5	IU (U_CURRENT/ 1-SHUNT_CURRENT)	P401/AN001 *1 (P000/AN016) *1 (P402/AN002) *1	6	IU (U_CURRENT (G)/ 1-SHUNT_CURRENT (G))	(P001/AN017) *1 (P403/AN003) *1
7	IV (V_CURRENT)	P403/AN003 *1 (P002/AN018) *1	8	IV (V_CURRENT (G))	(P003/AN019)
9	IW (W_CURRENT)	P405/AN005 *1 (P004/AN020) *1	10	IW (W_CURRENT (G))	(P005/AN021)
11	VU (U_VOLTAGE)	P007/AN023	12	VV (V_VOLTAGE)	PD01/AN025
13	VW (W_VOLTAGE)	PD03/AN027	14	AGND	- (AVSS)
15	VAC (VPFC)	P411/AN011	16	IPFC1	P413/AN013
17	VR/IPFC2	P415/AN015	18	AGND	- (AVSS)
19	AVCC	- (AVCC)	20	AVCC	- (AVCC)
21	AGND	- (AVSS)	22	AGND	- (AVSS)
23	VCC	- (VCC)	24	VCC	- (VCC)
25	DGND	- (VSS)	26	DGND	- (VSS)
27	PWM_UL	P203/GTIOC4B	28	DGND	- (VSS)
29	PWM_UH	P202/GTIOC4A	30	DGND	- (VSS)
31	PWM_VL	P205/GTIOC5B	32	DGND	- (VSS)
33	PWM_VH	P204/GTIOC5A	34	DGND	- (VSS)

*1 Exclusively assigned by jumper register setting
*2 Available functions are limited depending on the inverter board type.

Table 5-5 2nd Inverter board connector (CN4) pin assignment

Pin No.	Pin Function	RX74M Pin	Pin No.	Pin Function	RX74M Pin
1	PWM_WL	P207/GTIOC6B	2	DGND	- (VSS)
3	PWM_WH	P206/GTIOC6A	4	DGND	- (VSS)
5	DRV_SCK (SCK)	P601/RSPCK0-D	6	PWM_PFC2	P606/GTIOC15A *1
				DRV_RXD (MOSI)	(P602/MOSI0-D) *1
7	DRV_TXD (MISO)	P603/MISO0-D	8	DRV_CS (CS)	PF06/SSL02-C
9	BUS_POWER_IN2	-	10	INV_CONNECTED	PF00/GPIO/IRQ0
11	SAFE_INTERLOCK	PF01/GPIO/IRQ1	12	OC (INVERTER)	P709/GTETRGD/IRQ17
13	OC (PFC)	P211/GPIO/IRQ27	14	PWM_PFC1/ DRV_EN	PE07/GTIOC10B
15	RELAY_IN/ CON_MOT_SEL	P906/GPIO	16	SW1	P010/GPIO/IRQ26
17	SW2/ OVER_TEMPERATURE	P009/GPIO/IRQ25	18	LED1	P011/GPIO
19	LED2	P212/GPIO	20	LED3	P310/GPIO
21	HALL_U	P012/IRQ28	22	HALL_V	P013/IRQ29
23	HALL_W	P014/IRQ30	24	IPS_SIO_SDA (SDA)	P107/SDAHS2-A
25	IPS_SCK_SCL (SCL)	P106/SCLHS2-A	26	IPS_CSN_IRQN/ ENC_Z	P710/GTETRGA/IRQ18 *1
				(PCIF Z Phase)	(P215/PCINZ0) *1
27	IPS_A	(PD05/AN029) *1	28	IPS_A#	PD07/AN031
	ENC_A	PG06/GTIOC13A *1			
	(PCIF_A)	(P213/PCINA0) *1			
29	IPS_B	(P901/AN033) *1	30	IPS_B#	P903/AN035
	ENC_B	PG07/GTIOC13B *1			
	(PCIF_B)	(P214/PCINB0) *1			
31	5V_GND	- (VSS)	32	5V_GND	- (VSS)
33	+5V	-	34	+5V	-

*1 Exclusively assigned by jumper register setting
*2 Available functions are limited depending on the inverter board type.

5.1.6 Serial communication

For serial communication using Renesas Motor Workbench, the CPU board has SCI connector. Pin assignment for SCI connector is listed in Table 5-6.

Table 5-6 SCI connector (CN8) pin assignment

Pin No.	Pin Function	RX74M Connection Pin
1	DGND	- (VSS)
2	MCU RXD	P605/RXD009-B
3	MCU TXD	P604/TXD009-B
4	VCC	- (VCC)

5.1.7 SPI Communication

This product has through holes for SPI communication. Pin assignment for SPI communication connector is listed in Table 5-7.

Table 5-7 SPI connector (CN9) pin assignment

Pin No.	Pin Function	RX74M Connection Pin
1	CS	P600/SSL00-D
2	MOSI	P602/MOSI0-D
3	MISO	P603/MISO0-D
4	SCK	P601/RSPCK0-D
5	DGND	- (VSS)
6	VCC	- (VCC)

5.1.8 Pmod

This product has two connectors for connecting Pmod modules. The pin assignments are listed in Table 5-8, Table 5-9.

Table 5-8 Pmod 3A connector (CN10) pin assignment

Pin No.	Pin Function	RX74M Connection Pin	Pin No.	Pin Function	RX74M Connection Pin
1	CTS	P501/CTS002#	7	GPIO/IRQ	P507/GPIO/IRQ7
2	TXD	P502/TXD002-C	8	GPIO	PF04/GPIO
3	RXD	P503/RXD002-C	9	GPIO	PF02/GPIO
4	RTS	P500/CTS002#/RTS002#	10	GPIO	P101/GPIO
5	DGND	- (VSS)	11	DGND	- (VSS)
6	VCC	- (VCC)	12	VCC	- (VCC)

Table 5-9 Pmod 6A connector (CN12) pin assignment

Pin No.	Pin Function	RX74M Connection Pin	Pin No.	Pin Function	RX74M Connection Pin
1	NC/INT	P505/GPIO/IRQ10	7	GPIO	P108/GPIO
2	NC/RESET	P504/GPIO	8	GPIO	P109/GPIO
3	SCL (I2C)	P106/SCLHS2-A	9	GPIO	P110/GPIO
4	SDA (I2C)	P107/SDAHS2-A	10	GPIO	P111/GPIO
5	DGND	- (VSS)	11	DGND	- (VSS)
6	VCC	- (VCC)	12	VCC	- (VCC)

5.1.9 CAN communication

This product has through holes for CAN communication. The pin assignments for the CAN connector is listed in Table 5-10. Note that the CAN connector and CAN driver are not mounted, so users need to mount them when using this circuit.

Table 5-10 CAN connector (CN15), CAN Driver (U9) pin assignment

CAN driver		CAN connector		RX74M Connection Pin
Pin No.	Pin Function	Pin No.	Pin Function	
1	TXD	-	-	P804/CTX0
2	DGND	2	VSS	- (VSS)
3	VCC (+5V)	-	-	-
4	RXD	-	-	P805/CRX0
5	VIO	-	-	- (VCC)
6	CANL	3	CANL	-
7	CANH	1	CANH	-
8	STB	-	-	P115/GPIO
9	DGND	2	VSS	- (VSS)

5.1.10 User controllable LED

This product has several LEDs for use in program debugging and system applications. Pin assignment for user controllable LEDs are listed in Table 5-11, Table 5-12.

Table 5-11 User controllable LED (INV1) pin assignment

RX74M Pin		LED1 (Orange)	LED2 (Orange)	LED3 (Orange)
P508/GPIO	Output HIGH	OFF	-	-
	Output LOW	ON	-	-
P510/GPIO	Output HIGH	-	OFF	-
	Output LOW	-	ON	-
P511/GPIO	Output HIGH	-	-	OFF
	Output LOW	-	-	ON

Table 5-12 User controllable LED (INV2) pin assignment

RX74M Pin		LED4 (Orange)	LED5 (Orange)	LED6 (Orange)
P011/GPIO	Output HIGH	OFF	-	-
	Output LOW	ON	-	-
P212/GPIO	Output HIGH	-	OFF	-
	Output LOW	-	ON	-
P310/GPIO	Output HIGH	-	-	OFF
	Output LOW	-	-	ON

5.1.11 DSMIF circuit

This product has 2 connectors for DSMIF communication. The pin assignments for the DSMIF connectors are listed in Table 5-13, Table 5-14.
Note that the connectors are not mounted, so users need to mount them when using this circuit.

Table 5-13 DSMIF0 connector (CN11) pin assignment

Pin No.	Pin Function	RX74M Connection Pin	Pin No.	Pin Function	RX74M Connection Pin
1	NC	-	2	VCC	- (VCC)
3	NC	-	4	NC	-
5	NC	-	6	NC	-
7	DSMCLK0	P514/DSM0_CLK0-G	8	DSMDAT0	P515/DSM0_DAT0-G
9	DGND	- (VSS)	10	DGND	- (VSS)

Table 5-14 DSMIF1 connector (CN13) pin assignment

Pin No.	Pin Function	RX74M Connection Pin	Pin No.	Pin Function	RX74M Connection Pin
1	NC	-	2	VCC	- (VCC)
3	NC	-	4	NC	-
5	NC	-	6	NC	-
7	DSMCLK1	P807/DSM0_CLK1-F	8	DSMDAT1	P806/DSM0_DAT1-F
9	DGND	- (VSS)	10	DGND	- (VSS)

5.1.12 EtherCAT circuit

This product has EtherCAT connector (CN7) and EtherCAT test connector (CN6). When using EtherCAT, connect to the target with CN7. The upper side of CN7 is connected to Ch1, and the lower side is connected to Ch0. The connector configuration is shown in Figure 5-2 The test connector connections are listed in Table 5-15.
Additionally, it has LEDs for checking the EtherCAT control status. The pin assignments of each LEDs are listed in Table 5-16, Table 5-17, Table 5-18.

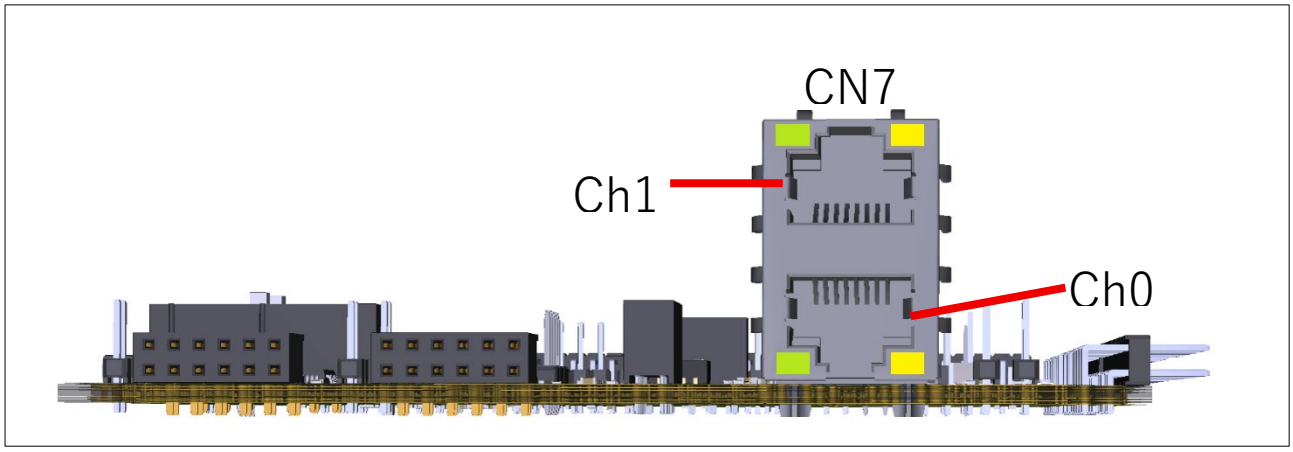

Figure 5-2 **EtherCAT Connector (CN7) Configuration**

Table 5-15 EtherCAT test connector (CN6) pin assignment

Pin No.	RX74M Connection Pin
1	PA00/CATIRQ
2	P801/CATSYNC0
3	P702/CATSYNC1
4	P800/CATLATCH0
5	P701/CATLATCH1

Table 5-16 LED for EtherCAT (GPIO control) pin assignment

RX74M Pin		LED8 (Module1/ Green)	LED9 (Module2/ Red)	LED10 (Network1/ Green)	LED11 (Network2/ Red)
PF08/GPIO	Output HIGH	ON	-	-	-
	Output LOW	OFF	-	-	-
PF09/GPIO	Output HIGH	-	ON	-	-
	Output LOW	-	OFF	-	-
P509/GPIO	Output HIGH	-	-	ON	-
	Output LOW	-	-	OFF	-
PF03/GPIO	Output HIGH	-	-	-	ON
	Output LOW	-	-	-	OFF

Table 5-17 LED for EtherCAT (IP control) pin assignment

RX74M Pin		LED12 (L/A IN/ Green)	LED13 (L/A OUT/ Green)	LED14 (RUN/ Green)	LED15 (ERR/ Red)	LED16-R (DNF)	LED16-YG (DNF)
PC06/ CATLINKACT0	Output HIGH	ON	-	-	-	-	-
	Output LOW	OFF	-	-	-	-	-
PA07/ CATLINKACT1	Output HIGH	-	ON	-	-	-	-
	Output LOW	-	OFF	-	-	-	-
P105/ CATLEDRUN	Output HIGH	-	-	ON	-	-	-
	Output LOW	-	-	OFF	-	-	-
P100/ CATLEDERR	Output HIGH	-	-	-	ON	ON	-
	Output LOW	-	-	-	OFF	OFF	-
P104/ CATLEDSTER	Output HIGH	-	-	-	-	-	ON
	Output LOW	-	-	-	-	-	OFF

Table 5-18 LED for EtherCAT (EtherCAT connector) pin assignment

PHY Driver (KSZ8081MNXCA)		Lower/ Yellow	Lower/ Green	Upper/ Yellow	Upper/ Green
CH0(U4)/LED0	Output HIGH	OFF	-	-	-
	Output LOW	ON	-	-	-
CH0(U4)/LED1	Output HIGH	-	OFF	-	-
	Output LOW	-	ON	-	-
CH1(U5)/LED0	Output HIGH	-	-	OFF	-
	Output LOW	-	-	ON	-
CH1(U5)/LED1	Output HIGH	-	-	-	OFF
	Output LOW	-	-	-	ON

5.1.13 Test points

The CPU board has several test points to monitor various signals. They are marked in Figure 5-3 and summarized in Table 5-19

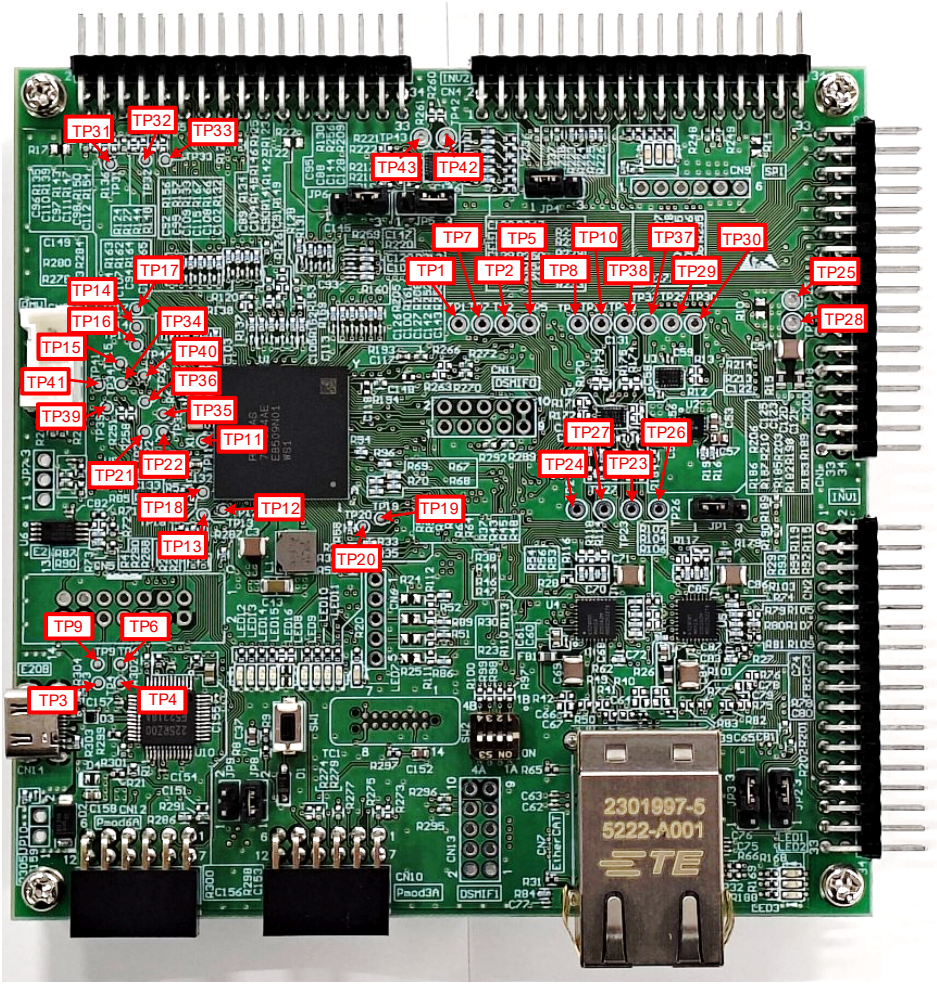

Figure 5-3 Test points

Table 5-19 Test points

No.	Signal name	Description	No.	Signal name	Description
TP1	PG14/PCOUTZ0	PG14/PCOUTZ0	TP26	5V_GND	Ground for +5V
TP2	PG12/PCOUTA0	PG12/PCOUTA0	TP27	VSS	Digital Ground
TP3	-	TRST#(NC)	TP28	AVSS	Analog Ground
TP4	-	EMLE(NC)	TP29	SCL_U3	U3 SCL
TP5	PG13/PCOUTB0	PG13/PCOUTB0	TP30	SDA_U3	U3 SDA
TP6	-	CN5-6pin	TP31	INV2 U CURRENT (G)	P001/AN017
TP7	PG11/PCOUTZ1	PG11/PCOUTZ1	TP32	INV2 V CURRENT (G)	P003/AN019
TP8	PG09/PCOUTA1	PG09/PCOUTA1	TP33	INV2 W CURRENT (G)	P005/AN021
TP9	-	CN5-10pin	TP34	P210/PCINZ1	P210/PCINZ1
TP10	PG10/PCOUTB1	PG10/PCOUTB1	TP35	P208/PCINA1	P208/PCINA1
TP11	P305/NMI	P305/NMI	TP36	P209/PCINB1	P209/PCINB1
TP12	P200/GPIO/IRQ8	P200/GPIO/IRQ8	TP37	SCL_U7	U7 SCL
TP13	P201/GPIO/IRQ9	P201/GPIO/IRQ9	TP38	SDA_U7	U7 SDA
TP14	P309/XCIN/EXCIN	P309/XCIN/EXCIN	TP39	P215/PCINZ0	P215/PCINZ0
TP15	P008/GPIO	P008/GPIO	TP40	P213/PCINA0	P213/PCINA0
TP16	P308/XCOUT	P308/XCOUT	TP41	P214/PCINB0	P214/PCINB0
TP17	P015/GPIO	P015/GPIO	TP42	SCL_U8	U8 SCL
TP18	P304/GPIO	P304/GPIO	TP43	SDA_U8	U8 SDA
TP19	P512/GPIO	P512/GPIO			
TP20	P513/GPIO	P513/GPIO			
TP21	P311/GPIO/DSM0_CLK2-C	P311/GPIO/DSM0_CLK2-C			
TP22	P312/GPIO/DSM0_DAT2-C	P312/GPIO/DSM0_DAT2-C			
TP23	+5V	+5V supply			
TP24	VCC	Digital Power			
TP25	AVCC	Analog Power			

5.1.14 Pin function list

Table 6-20 RX74M pin function list

Pin number	Pin function	Board function
A01	VSS	VSS
A02	P514/DSM0_CLK0_G	DSMIF0_PIN7_DSM0_CLK0
A03	P515/DSM0_DAT0_G	DSMIF0_PIN8_DSM0_DAT0
A04	PC01/ESC0_CAT0_ETXD0_A	ESC0_CAT0_ETXD0
A05	PC03/ESC0_CAT0_ETXD2_A	ESC0_CAT0_ETXD2
A06	PC04/ESC0_CAT0_ETXD3_A	ESC0_CAT0_ETXD3
A07	PC07/CATRESTOUT _A	ESC_CATRESTOUT
A08	P801/ESC0_CATSYNC0_A	ESC0_CATSYNC0
A09	P800/ESC0_CATLATCH0_A	ESC0_CATLATCH0
A10	VLO	VLO
A11	VSS_DCDC	VSS_DCDC
A12	VSS_DCDC	VSS_DCDC
A13	VCC_DCDC	VCC_DCDC
A14	P504/GPIO	PMOD6A_PIN2_RST_GPIO
A15	P103/CATI2CDATA_A	ESC_CATI2CDATA
A16	P104/CATLEDSTER_C	ESC_CATLEDSTER_LED
A17	P106/SCL2_A	PMOD6A_PIN3_IIC_SCL
A18	P200/GPIO/IRQ8	TP12_GPIO_IRQ
A19	P300/TMS	DEBUGGER_TMS
A20	VSS	VSS
B01	PG03/GPIO/IRQ11	CAT0_INTRP
B02	P512/GPIO	TP19_GPIO
B03	P513/GPIO	TP20_GPIO
B04	PC00/ESC0_CAT0_TX_CLK_A	ESC0_CAT0_TX_CLK
B05	PC02/ESC0_CAT0_ETXD1_A	ESC0_CAT0_ETXD1
B06	VSS	VSS
B07	PC05/ESC0_CAT0_TX_EN_A	ESC0_CAT0_TX_EN
B08	PC06/ESC0_CATLINKACT0_A	ESC0_CATLINKACT0_LED
B09	P802/GPIO/IRQ2	CAT1_INTRP
B10	VLO	VLO
B11	VSS_DCDC	VSS_DCDC
B12	VSS_DCDC	VSS_DCDC
B13	VCC_DCDC	VCC_DCDC
B14	P505/GPIO/IRQ10	PMOD6A_PIN1_INT
B15	P102/CATI2CCLK_A	ESC_CATI2CCLK
B16	VSS	VSS
B17	P107/SDA2_A	PMOD6A_PIN4_IIC_SDA
B18	P201/GPIO/IRQ9	TP13_GPIO_IRQ
B19	P301/TCK	DEBUGGER_TCK
B20	P302/TDO	DEBUGGER_TDO
C01	PG02/ESC1_CAT1_RX_ER_A	ESC1_CAT1_RX_ER
C02	PG01/ESC1_CAT1_RX_DV_A	ESC1_CAT1_RX_DV
C03	PB01/ESC0_CAT0_ERXD1_A	ESC0_CAT0_ERXD1
C04	PB03/ESC0_CAT0_ERXD3_A	ESC0_CAT0_ERXD3
C05	PB04/ESC0_CAT0_RX_CLK_A	ESC0_CAT0_RX_CLK
C06	PB06/ESC0_CAT0_RX_ER_A	ESC0_CAT0_RX_ER
C07	PB07/ESC0_CAT0_LINKSTA_A	ESC0_CAT0_LINKSTA
C08	PB05/ESC0_CAT0_RX_DV_A	ESC0_CAT0_RX_DV
C09	P803/GPIO/IRQ3	INV1 SW1
C10	VLO	VLO
C11	VLO	VLO
C12	VCC_DCDC	VCC_DCDC
C13	VCC_DCDC	VCC_DCDC
C14	P506/GPIO/IRQ6	INV1 SW2/THERMAL_ERROR
C15	P105/CATLEDRUN_C	ESC_CATLEDRUN_LED
C16	P805/CRX0_D	CAN_DRIVER_PIN4_CRX

Pin number	Pin function	Board function
C17	P806/DSM0_CLK1_F	DSMIF1_PIN7_DSM0_CLK1
C18	P807/DSM0_DAT1_F	DSMIF1_PIN8_DSM0_DAT1
C19	P304/GPIO	TP18_GPIO
C20	P303/TDI	DEBUGGER_TDI
D01	PA06/ESC1_CAT1_ETXD3_A	ESC1_CAT1_ETXD3
D02	PG00/ESC1_CAT1_RX_CLK_A	ESC1_CAT1_RX_CLK
D03	P511/GPIO	INV1 LED3
D18	P108/GPIO	PMOD6A_PIN7_GPIO
D19	P109/GPIO	PMOD6A_PIN8_GPIO
D20	P110/GPIO	PMOD6A_PIN9_GPIO
E01	PA05/ESC1_CAT1_ETXD2_A	ESC1_CAT1_ETXD2
E02	PA07/ESC1_CATLINKACT1_A	ESC1_CATLINKACT1_LED
E03	P510/GPIO	INV1 LED2
E05	PG05/ESC0_CAT0_MDIO_A	ESC0_CAT0_MDIO
E06	PB02/ESC0_CAT0_ERXD2_A	ESC0_CAT0_ERXD2
E07	PB00/ESC0_CAT0_ERXD0_A	ESC0_CAT0_ERXD0
E08	VCC	VCC
E09	VCC	VCC
E10	P500/CTS_RTS2#_C	PMOD3A_PIN4_UART_CTS_RTS#
E11	P502/TXD2_C	PMOD3A_PIN2_UART_TXD
E12	P100/CATLEDERR_C	ESC_CATLEDERR_LED
E13	VCC	VCC
E14	VCC	VCC
E15	P507/GPIO/IRQ7	PMOD3A_PIN7_INT
E16	P804/CTX0_D	CAN_DRIVER_PIN1_CTX
E18	P111/GPIO	PMOD6A_PIN10_GPIO
E19	P112/GPIO	CAT_ID_1
E20	P113/GPIO	CAT_ID_2
F01	PA03/ESC1_CAT1_ETXD0_A	ESC1_CAT1_ETXD0
F02	PA04/ESC1_CAT1_ETXD1_A	ESC1_CAT1_ETXD1
F03	P509/GPIO	CAT_NETWORK1_LED
F05	PG07/GTIOC13B/IRQ15	INV2 ENC_B
F06	PG06/GTIOC13A/IRQ14	INV2 ENC_A
F07	PG04/ESC0_CAT0_MDC_A	ESC0_CAT0_MDC
F08	VSS	VSS
F09	VSS	VSS
F10	P501/CTS2#_C	PMOD3A_PIN1_UART_CTS#
F11	P503/RXD2_C	PMOD3A_PIN3_UART_RXD
F12	P101/GPIO	PMOD3A_PIN10_GPIO
F13	VSS	VSS
F14	VSS	VSS
F15	PF02/GPIO	PMOD3A_PIN9_GPIO
F16	P115/GPIO	CAN_DRIVER_PIN8_STB
F18	P114/GPIO	CAT_ID_3
F19	VSS	VSS
F20	VCC	VCC
G01	PA02/ESC1_CAT1_TX_CLK_A	ESC1_CAT1_TX_CLK
G02	PA01/ESC1_CAT1_TX_EN_A	ESC1_CAT1_TX_EN
G03	P508/GPIO	INV1 LED1
G05	VCC	VCC
G06	VSS	VSS
G15	PF03/GPIO	CAT_NETWORK2_LED
G16	PF04/GPIO/IRQ4	PMOD3A_PIN8_RST_GPIO
G18	VSS_USB	VSS_USB
G19	PF00/GPIO/IRQ0	INV2 INV_CONNECTED
G20	PF01/GPIO/IRQ1	INV2 SAFE_LOCK
H01	PA00/ESC_CATIRQ_A	ESC_CATIRQ
H02	PG13/PCOUTB0	TP5_PCOUTB0
H03	PG15/GPIO/IRQ31	INV1 OC(PFC)

Pin number	Pin function	Board function
H05	VCC	VCC
H06	VSS	VSS
H08	VSS	VSS
H09	VCL	VCL
H10	VSS	VSS
H11	VSS	VSS
H12	VCL	VCL
H13	VSS	VSS
H15	P204/GTIOC5A	INV2 PWM_VH
H16	P203/GTIOC4B	INV2 PWM_UL
H18	PF05/GPIO/IRQ5	CAT_ID_4
H19	VCC_USB	VCC_USB
H20	VCC_USB	VCC_USB
J01	PG11/PCOUTZ1	TP7_PCOUTZ1
J02	PG14/PCOUTZ0	TP1_PCOUTZ0
J03	PG12/PCOUTA0	TP2_PCOUTA0
J05	VCC	VCC
J06	VSS	VSS
J08	VSS	VSS
J09	VCL	VCL
J10	VSS	VSS
J11	VSS	VSS
J12	VSS	VSS
J13	VCL	VCL
J15	P205/GTIOC5B	INV2 PWM_VL
J16	P202/GTIOC4A	INV2 PWM_UH
J18	AVSS_USBHS	AVSS_USBHS
J19	USBHS_DP	USBHS_DP
J20	USBHS_DM	USBHS_DM
K01	PG09/PCOUTA1	TP8_PCOUTA1
K02	PG10/PCOUTB1	TP10_PCOUTB1
K03	P705/ESC1_CAT1_ERXD1_A	ESC1_CAT1_ERXD1
K05	P704/ESC1_CAT1_ERXD0_A	ESC1_CAT1_ERXD0
K06	P702/ESC1_CATSYNC1_A	ESC1_CATSYNC1
K08	VCL	VCL
K09	VSS	VSS
K10	VCL	VCL
K11	VCL	VCL
K12	VCC	VCC
K13	VSS	VSS
K15	P207/GTIOC6B	INV2 PWM_WL
K16	P206/GTIOC6A	INV2 PWM_WH
K18	USBHS_RREF	USBHS_RREF
K19	VSS_USBHS	VSS_USBHS
K20	VCC_USBHS	VCC_USBHS
L01	PG08/GPIO/IRQ24	INV1 HALL_W
L02	VSS	VSS
L03	P707/ESC1_CAT1_ERXD3_A	ESC1_CAT1_ERXD3
L05	P706/ESC1_CAT1_ERXD2_A	ESC1_CAT1_ERXD2
L06	P703/ESC1_CAT1_LINKSTA_A	ESC1_CAT1_LINKSTA
L08	VSS	VSS
L09	VSS	VSS
L10	VCL	VCL
L11	VCL	VCL
L12	VSS	VSS
L13	VCC	VCC
L15	P310/GPIO	INV2 LED3
L16	P305/NMI	TP11_GPI_NMI
L18	AVCC_USBHS	AVCC_USBHS

Pin number	Pin function	Board function
L19	VCC	VCC
L20	VCC	VCC
M01	P701/ESC1_CATLATCH1_A	ESC1_CATLATCH1
M02	P715/GPIO/IRQ23	INV1 HALL_V
M03	P714/GPIO/IRQ22	INV1 HALL_U
M05	VCC	VCC
M06	VSS	VSS
M08	VCL	VCL
M09	VCL	VCL
M10	VSS	VSS
M11	VSS	VSS
M12	VSS	VSS
M13	VCL	VCL
M15	P312	TP22_GPIO_DSM0_DAT2
M16	P311	TP21_GPIO_DSM0_CLK2
M18	VSS	VSS
M19	P306/EXTAL	EXTAL
M20	P307/XTAL	XTAL
N01	P700/CLKOUT_ETHPHYCLK	CLKOUT_ETHPHYCLK
N02	P712/GTIOC14A/IRQ20	INV1 ENC_A
N03	P713/GTIOC14B/IRQ21	INV1 ENC_B
N05	VCC	VCC
N06	VSS	VSS
N08	VSS	VSS
N09	VCL	VCL
N10	VSS	VSS
N11	VSS	VSS
N12	VCL	VCL
N13	VSS	VSS
N15	P209/PCINB1	INV1 PCINB1
N16	P208/PCINA1	INV1 PCINA1
N18	P315/MD/FINED	DEBUGGER_MD
N19	VSS	VSS
N20	VSS	VSS
P01	PE06/GTIOC10A	INV1 PWM_PFC1/DRV_EN
P02	PE07/GTIOC10B	INV2 PWM_PFC1
P03	PF09/GPIO	CAT_MODULE2_LED
P05	VCC	VCC
P06	VSS	VSS
P15	P211/GPIO/IRQ27	INV2 OC(PFC)
P16	P210/PCINZ1	INV1 PCINZ1
P18	VSS	VSS
P19	P309/XCIN/EXCIN	TP14_GPI
P20	P308/XCOUT	TP16_GPI
R01	PE03/GTIOC8B	INV1 PWM_VL
R02	PE05/GTIOC9B	INV1 PWM_WL
R03	PF08/GPIO	CAT_MODULE1_LED
R05	P607/GTIOC15B	INV1 PWM_PFC2
R06	P606/GTIOC15A	INV2 PWM_PFC2
R07	VSS	VSS
R08	VSS	VSS
R09	VSS	VSS
R10	P906/GPIO	INV2 RELAY_IN/CON_MOT_SEL
R11	P405/AN005	INV2 IW(W_CURRENT)
R12	P404/AN004	INV1 IW(W_CURRENT)
R13	VSS	VSS
R14	VSS	VSS
R15	P215/PCINZ0	INV2 PCINZ0
R16	P214/PCINB0	INV2 PCINB0

Pin number	Pin function	Board function
R18	RES#	RES#
R19	VCC	VCC
R20	VBATT/VCC	VBATT/VCC
T01	PE01/GTIOC7B	INV1 PWM_UL
T02	PE04/GTIOC9A	INV1 PWM_WH
T03	PF07/SSLA3_C	INV1 SPI_CS
T05	P604/TXD9_B	RMW_PIN3_UART_TXD
T06	P602/MOSIA_D	SPI_PIN2_SPI_MOSI
T07	VCC2	VCC2
T08	VCC2	VCC2
T09	VCC2	VCC2
T10	P907/GPIO	INV1 RELAY_IN/CON_MOT_SEL
T11	P406/AN006	INV1 TEMPERATURE
T12	P407/AN007	INV2 TEMPERATURE
T13	VCC	VCC
T14	VCC	VCC
T15	P013/GPIO/IRQ29	INV2 HALL_V
T16	P012/GPIO/IRQ28	INV2 HALL_U
T18	P213/PCINA0	INV2 PCINA0
T19	P212/GPIO	INV2 LED2
T20	P000/AN016	ADC_AN016
U01	PE00/GTIOC7A	INV1 PWM_UH
U02	PE02/GTIOC8A	INV1 PWM_VH
U03	PF06/SSLA2_C	INV2 SPI_CS
U18	P008/GPIO	TP15_GPIO
U19	P009/GPIO/IRQ25	INV2 SW2/THERMAL_ERROR
U20	P001/AN017	ADC_AN017
V01	P709/GTETRGD/IRQ17	INV2 OC(INV)
V02	P711/GTETRGB/IRQ19	INV1 OC(INV)
V03	P605/RXD9_B	RMW_PIN2_UART_RXD
V04	P603/MISOA_D	SPI_PIN3_SPI_MISO
V05	P600/SSLA0_D	SPI_PIN1_SPI_CS
V06	P601/RSPCKA_D	SPI_PIN4_SPI_SCLK
V07	P905/GPIO/IRQ13	INV1 SAFE_LOCK
V08	P904/GPIO/IRQ12	INV1 INV_CONNECTED
V09	AVCC0	AVCC0
V10	AVSS0	AVSS0
V11	VREFL00 for ADC0	VREFL00 for ADC0
V12	VREFH00 for ADC0	VREFH00 for ADC0
V13	P412/AN012	INV1 IPFC1
V14	P413/AN013	INV2 IPFC1
V15	P414/AN014	INV1 VR/IPFC2
V16	P415/AN015	INV2 VR/IPFC2
V17	P014/GPIO/IRQ30	INV2 HALL_W
V18	P011/GPIO	INV2 LED1
V19	P010/GPIO/IRQ26	INV2 SW1
V20	P002/AN018	ADC_AN018
W01	P708/GTETRGC/IRQ16	INV1 ENC_Z/IPS_CSN
W02	P710/GTETRGA/IRQ18	INV2 ENC_Z/IPS_CSN
W03	PD05/AN029	INV2 IPS_A
W04	PD03/AN027	INV2 VW(W_VOLTAGE)
W05	VSS	VSS
W06	PD02/AN026	INV1 VW(W_VOLTAGE)
W07	P902/AN034	INV1 IPS_B#
W08	P900/AN032	INV1 IPS_B
W09	AVCC0	AVCC0
W10	AVSS0	AVSS0
W11	VREFL01 for ADC1	VREFL01 for ADC1
W12	VREFH01 for ADC1	VREFH01 for ADC1

Pin number	Pin function	Board function
W13	P403/AN003	INV2 IV(V_CURRENT)
W14	P401/AN001	INV2 IU(U_CURRENT)
W15	P411/AN011	INV2 VAC(VPFC)
W16	P409/AN009	INV2 VDC(BUS_VOLTAGE)
W17	VSS	VSS
W18	P006/AN022	INV1 VU(U_VOLTAGE)
W19	P004/AN020	ADC_AN020
W20	P003/AN019	ADC_AN019
Y01	VSS	VSS
Y02	PD07/AN031	INV2 IPS_A#
Y03	PD06/AN030	INV1 IPS_A#
Y04	PD04/AN028	INV1 IPS_A
Y05	PD01/AN025	INV2 VV(V_VOLTAGE)
Y06	PD00/AN024	INV1 VV(V_VOLTAGE)
Y07	P903/AN035	INV2 IPS_B#
Y08	P901/AN033	INV2 IPS_B
Y09	AVCC0	AVCC0
Y10	AVSS0	AVSS0
Y11	VREFL02 for ADC2	VREFL02 for ADC2
Y12	VREFH02 for ADC2	VREFH02 for ADC2
Y13	P402/AN002	INV1 IV(V_CURRENT)
Y14	P400/AN000	INV1 IU(U_CURRENT)
Y15	P410/AN010	INV1 VAC(VPFC)
Y16	P408/AN008	INV1 VDC(BUS_VOLTAGE)
Y17	P015/GPIO	TP17_GPIO
Y18	P007/AN023	INV2 VU(U_VOLTAGE)
Y19	P005/AN021	ADC_AN021
Y20	VSS	VSS

6. Regulatory information

This product meets the following standards. Refer to “General Precautions in the Handling of Microprocessing Unit and Microcontroller Unit Products” of this Evaluation Board Manual for the precautions.

6.1 EMC Directive

This product is herewith confirmed to comply with the requirements set out in the Council Directives on the Approximation of the laws of the Member States relating to Electromagnetic Compatibility Directive 2014/30/EU.

This product is in conformity with the following relevant UK Statutory Instrument(s) (and its amendments): 2016 No. 1091 Electromagnetic Compatibility Regulations 2016.

Warning – This is a Class A product. In a domestic environment this product may cause radio interference in which case the user may be required to take adequate measures to correct this interference.

6.2 Material Selection, Waste, Recycling and Disposal Standards

- China SJ/T 11364-2014, 10-year environmental protection use period.
- WEEE Directive (2012/19/EU) & The Waste Electrical and Electronic Equipment Regulations 2013

The WEEE (Waste Electrical and Electronic Equipment) regulations put responsibilities on producers for the collection and recycling or disposal of electrical and electronic waste. Return of WEEE under these regulations is applicable in the UK and European Union.

This product (including all accessories) is not intended for household use. After use the product cannot be disposed of as household waste, and the WEEE must be treated, recycled and disposed of in an environmentally sound manner.

Renesas Electronics Europe GmbH can take back end of life product. Register for this service at; https://www.renesas.com/form/weee-questionnaire

7. Design and Manufacture Information

The design resources for the MCB-RX74M (schematics, PCB layout data, BOM, etc.) and software development tools (Renesas Motor Workbench, QE for Motor, sample code, application note, etc.) are available for download from the following website: renesas.com/mcb-rx74m

8. Website and Support

In order to learn, download tools and documents, apply technical support for RX family MCU and its kit, visit the below Web site.

• RX Product Information renesas.com/rx
• Renesas Support renesas.com/support

Revision History

Rev.	Date	Description	
		Page	Summary
1.00	Oct 15, 2026	—	First edition

MCB-RX74M Evaluation Board Manual

Publication Date: Rev 1.00 Oct 15, 2026

Published by: Renesas Electronics Corporation

MCB-RX74M Evaluation Board Manual

Renesas Electronics Corporation

R12UZ0200EJ0100