EU154-1 Smart Water Actuator Valve

Hardware User's Guide

Contents

1. Overview 2

2. Purpose of this document 2

2.1 EU154-1 Solution Kit Features 2

2.2 Features of integrated Renesas components 2

2.3 Components' layout 4

2.4 Mechanical view and connections 5

2.5 Default Jumper Settings 6

3. EU154-1 Solution Kit Components 7

3.1 Power Supply 8

3.2 DA16600MOD – WiFi + BLE Module 9

3.3 Battery Voltage Measurement 10

3.4 Valve Control 10

3.5 UART Debug Port 12

3.6 SWD – Serial Wire Debug Interface 12

3.7 USB Device Port 13

3.8 LEDs and Buttons 13

4. BOM 15

5. Board Layout 17

6. Certifications 19

6.1 Europe CE 24

References 25

Revision History 26

1. Overview

This is Renesas EU154-1 Smart Water Leakage Actuator / Valve solution kit.

In combination with EU153-1 Smart Water Leakage Sensor it can automatically control e.g. a valve to start / stop water flow. In one application / use case this can avoid flooding when a water pipe breaks by stopping the water flow. In another use case it can intentionally start water flow to water plants when they get thirsty and stop water when they have sufficient water level.

The EU154-1 Smart Water Actuator can also be manuals controlled by MQTT commands, e.g., via Smartphone or Tablet GUI, overriding or replacing the above mentioned automatic control.

2. Purpose of this document

This Hardware user manual provides you in-depth details on the hardware of this solution kit.

2.1 EU154-1 Solution Kit Features

- Connectivity
  - Bluetooth® 5.1 LE
    - Operating frequency range: 2402÷2480 MHz
    - Power level: max. +4 dBm
  - WiFi IEEE 802.11b/g/n, 1×1, 20 MHz channel, bandwidth, 2.4 GHz band
  - Debug/programming connector with JTAG SWD Interface for the DA16200 MCU.
  - 1x 3.3V UART trace port: connected to the DA16200 MCU.
- Power supply:
  - Micro USB connector for wired charging of the integrated Li-Ion battery (5 V / 400 mA)
  - Integrated 3.7V / 1400mAh rechargeable Li-Ion battery
  - Connector for optional / external Solar cell or external DC power supply (1V-5V)
- Valve control:
  - Step-up voltage regulator to ~10V
  - Electric Double Layer Capacitors to enable high power peaks needed to drive a solenoid, $E \sim C*U^2$
  - HVPAKTM™ device with integrated H-bridge for valve control
- Push buttons
  - 2x general-purpose button connected to DA16600MOD, for use in demo SW see QSG or SW User Manual accordingly
  - Wake up button
- 7x LEDs
- 1x ON/OFF switch

2.2 Features of integrated Renesas components

The EU154-1 solution kit features

- ISL9301 - Li-Ion Battery Charger
- ISL9122A - Ultra-Low IQ Buck/Boost Regulator
- ISL9111A – High Efficiency Synchronous Boost Converter (w/ low startup voltage)
- ISL97519A - 600kHz/1.2MHz PWM Step-Up Regulator

- SLG47105 - GreenPAK Programmable Mixed-Signal Matrix with High Voltage Features, HVPAK
- SLG59H1401C – GreenFET Load Switch for OR'ing Power MUX
- SLG59M1557V – GreenFET Single P-Channel Load Switch
- DA16600MOD - Ultra-Low Power Wi-Fi + Bluetooth® Low Energy Combo Module

2.3 Components' layout

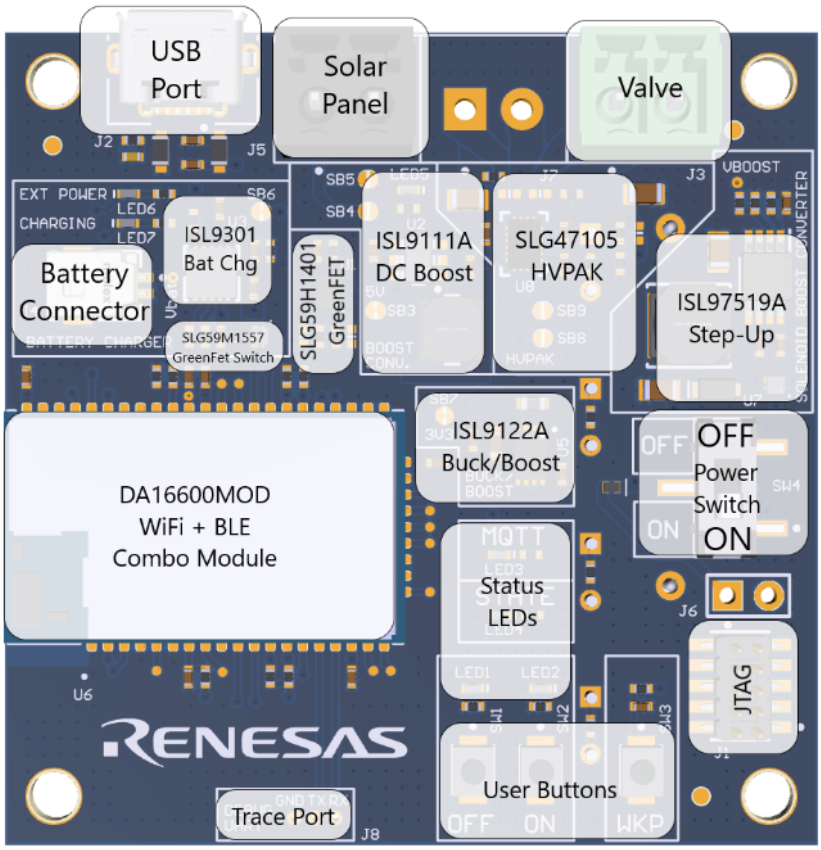

Figure 1: EU154-1 board top side.

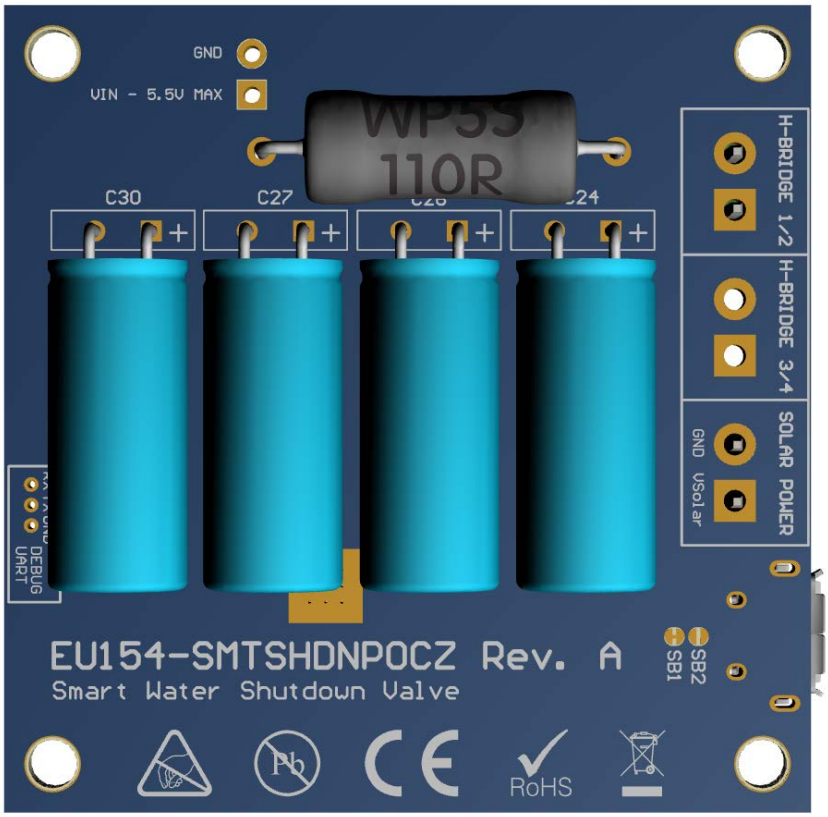

Figure 2: EU154-1 board bottom side.

2.4 Mechanical view and connections

Figure 3Figure 3 shows the EU154-1 device PCB from top and bottom sides and in Figure 4 you can see the whole setup – battery and valve cable connected to the board.

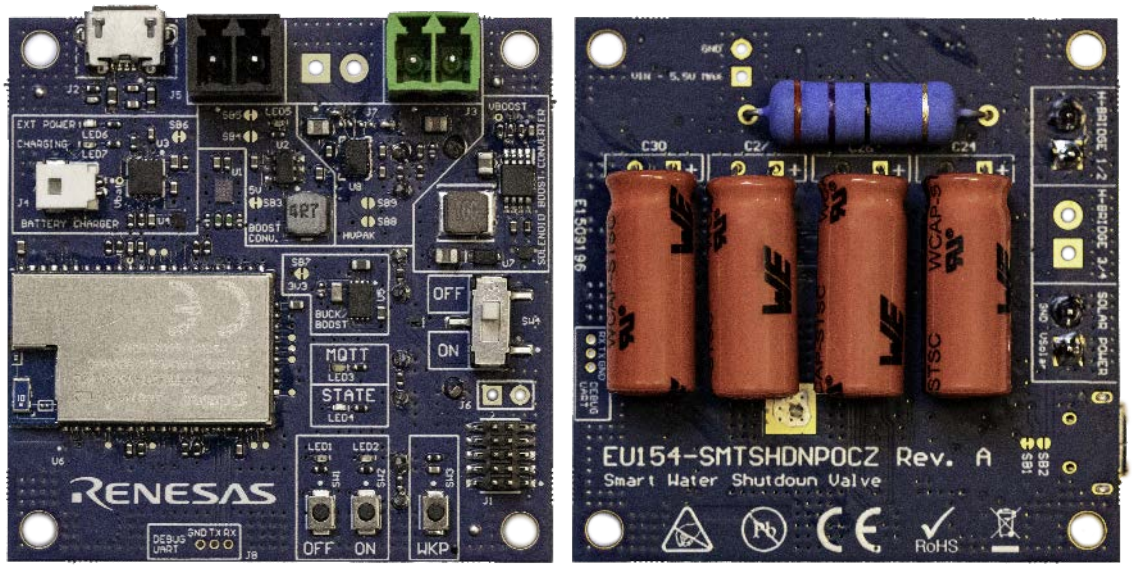

Figure 3: Top and bottom view of the PCB

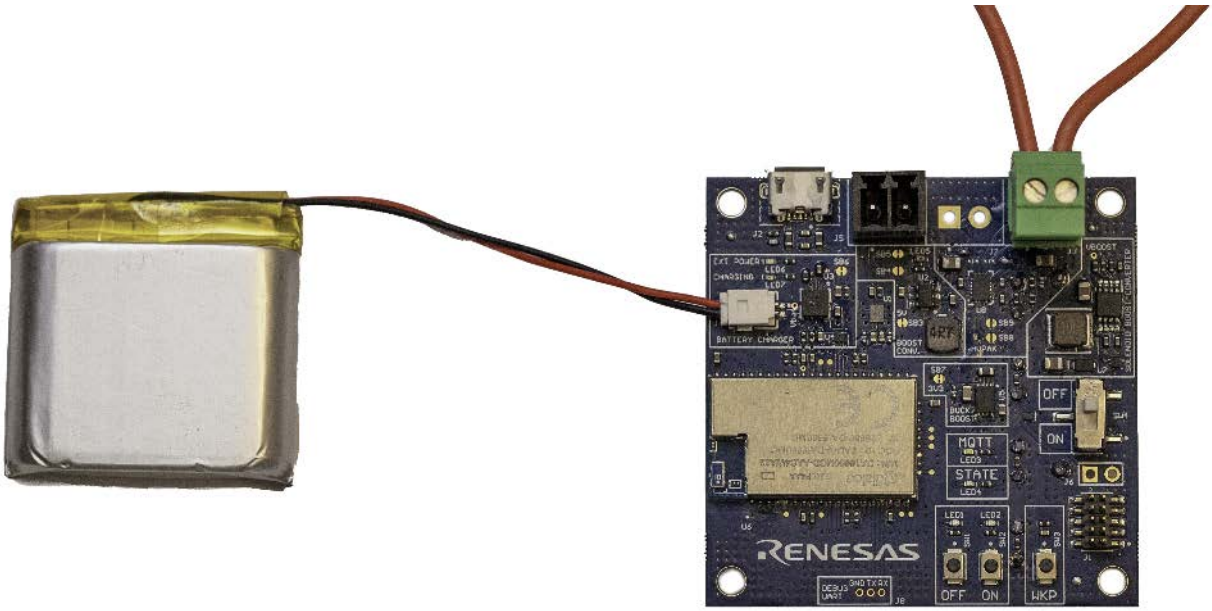

Figure 4: EU154-1 with battery and valve wires connected to terminal block

2.5 Default Jumper Settings

There are jumpers/ solder bridges for the default power setup.

Jumper	Section	Default state	Function
SB1	Connectors	CLOSED	Connection to U1 GreenFET Power OR'ing.
SB2	Connectors	OPEN	Direct connection to Solar Cell input
SB3	Power supply	CLOSED	Connects Solar connector J5 with 5V U2 boost converter ISL9111A.
SB5			
SB4	Power supply	OPEN	Possibility to bypass U2 boost converter ISL9111A. In this case SB3 and SB5 should be kept open.
SB6	Power supply	OPEN	Possibility to measure battery charger performance
SB7	Power supply	CLOSED	Possibility to measure system current without power supplies
SB8	Sensors	CLOSED	Option to bypass digital potentiometer
SB9			

More detailed power supply block diagram can be found in Figure 7.

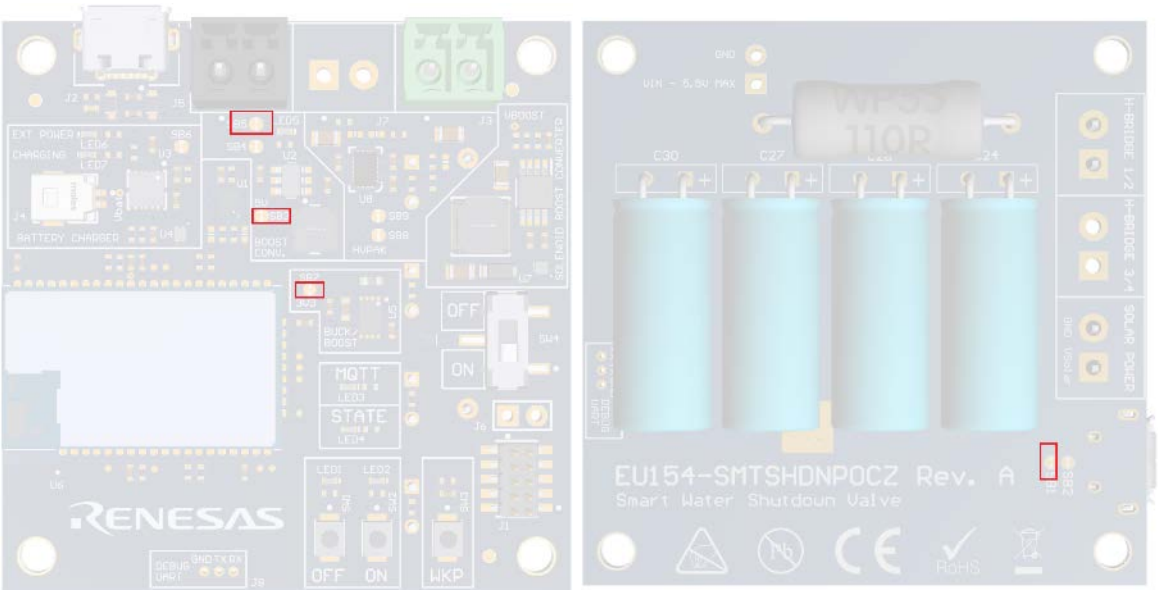

Figure 5: EU154-1 Default jumpers' positions. Red color indicates a closed jumper.

3. EU154-1 Solution Kit Components

Figure 6 shows the EU154-1 block diagram.

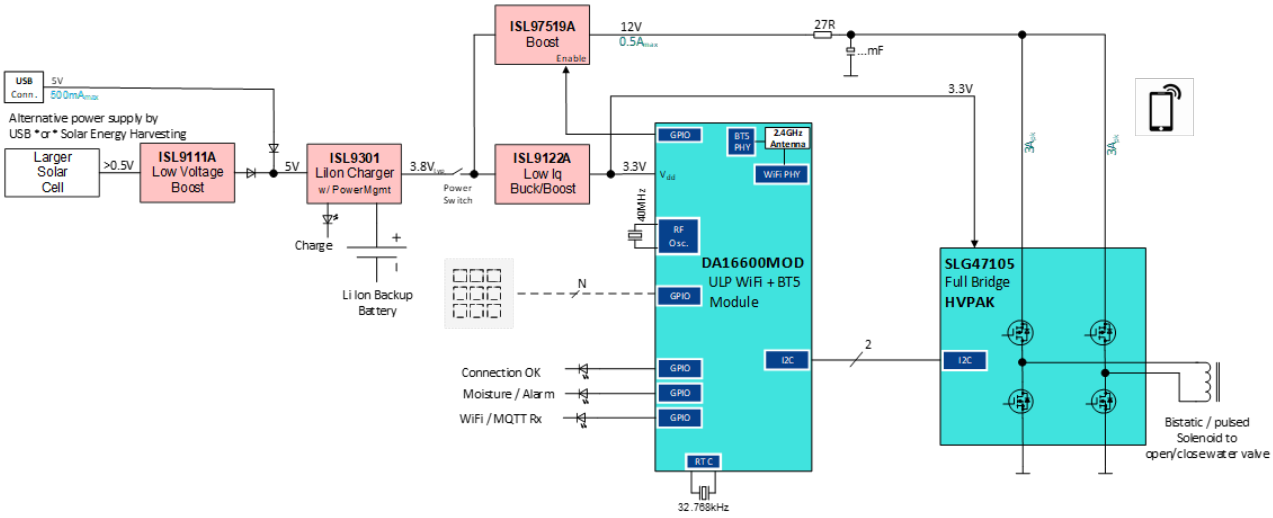

Figure 6: Smart Water Shutdown Valve Block Diagram.

EU154-1 firmware is running on DA16200 Cortex M4F MCU together with WiFi and communication stacks. BLE is used only for WiFi provisioning and initial system setup. It is running on DA14531. Both devices are integrated into one DA16600MOD module.

Trace output is made only for DA16200 and it is routed to J8 (Test points) on both sides of the PCB. It is marked as Debug UART on TOP silkscreen layer.

HVPAK SLG47105 device is used to control valve's solenoid and is connected to DA16600MOD using I2C.

The EU154-1 solution kit user interface includes valve ON/OFF buttons, device wakeup button SW3 and power switch annotated as SW4. There are several LEDs that are used to show current state of the device.

3.1 Power Supply

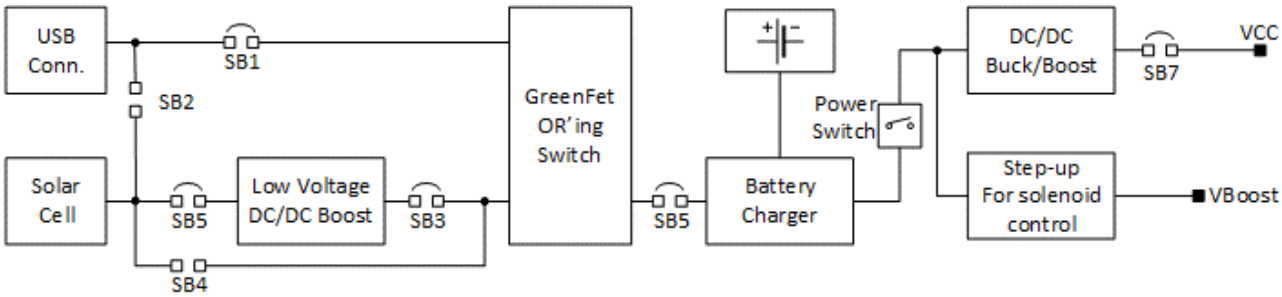

Figure 7: Power supply block diagram.

The EU154-1 solution kit has two external power supply options. First is USB and second option – Solar cell. Both can be used for battery charging. The system itself is always powered by the integrated Li-Ion battery. In case of solar cell charge, there is an additional boost converter ISL9111A to boost up the voltage up to 5V. SLG59H1401 GreenFET OR'ing switch automatically selects power source, i.e. USB or solar cell. Both external power supplies (USB and solar cell) can be used at the same time. Priority is set to USB and the management is done by GreenFET.

This solution kit has an integrated 1400 mAh rechargeable Li-Ion battery, which can be charged using USB device port or solar panel connector, and which powers the EU154-1 solution.

SLG59H1401 output is connected to ISL9301 battery charger with a solder bridge in between, delivering possibility to measure charge performance.

The ISL9301 battery charger has been configured to perform the following charging profile:

Parameter	Value	Function
I_{REF}	410 mA	Charging current level.
I_{MIN}	40 mA	End Of Charge (EOC) current threshold. CHG pin will toggle when timeout is reached.
$t_{TIMEOUT}$	4 h	Total charging period, after this period the charger is terminated.

The ISL9122A DC/DC buck-boost regulator is connected to the output of the battery charger to generate constant 3.3 V main power supply with ultra-low quiescent current. Buck/Boost function is needed to allow battery voltages above and below 3.3V, i.e. to get everything out of the battery with best efficiency.

Step up converter is connected to battery right after the main power switch and boosts up the voltage up to ~9V. To compensate high current requirement, 4 x 2.7V EDLCs are placed in series. To control the mechanically bistatic solenoid valve, usually 9V and 2-3A current pulses with duration of 30ms are required.

The power supply chain is depicted in Figure 7.

3.2 DA16600MOD – WiFi + BLE Module

The whole firmware is running on DA16200 Cortex M4F MCU, which is embedded in the DA16600MOD module together with a DA14531 BLE device.

DA16200 and DA14531 are sharing the same antenna on the module. Priority is set using 1-wire coexistence interface – BT_ACT.

I2C pullups (R18 and R19) are placed next to the module.

Wake up pin is used and connected to SW3 (Figure 18); but the device can wake-up by RTC.

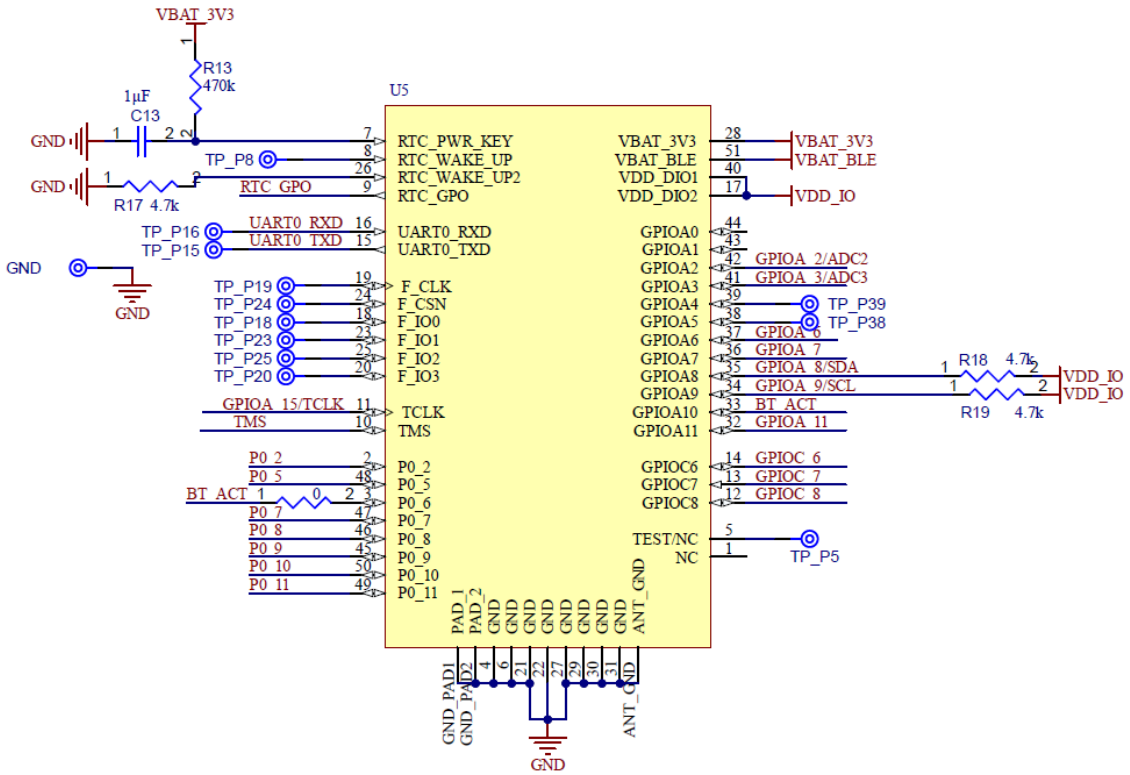

Figure 8. DA16600MOD Module

DA16200 MCU can be programmed using standard 10 pin and 1.27mm pitch pin header J2 (**Figure 13**). No additional adapter is required.

There are 1.27mm pitch test points for Trace purposes with possibility to access MCU directly via Terminal. More detailed interface description can be found in section 3.5 UART Debug Port.

3.3 Battery Voltage Measurement

Battery voltage is measured using a simple voltage divider. To save the power while measurement inactive, we use a GreenFET switch, see Figure 9. The switch is controlled by DA16200 GPIOA_6, and – when active – measurement is processed on ADC2 channel.

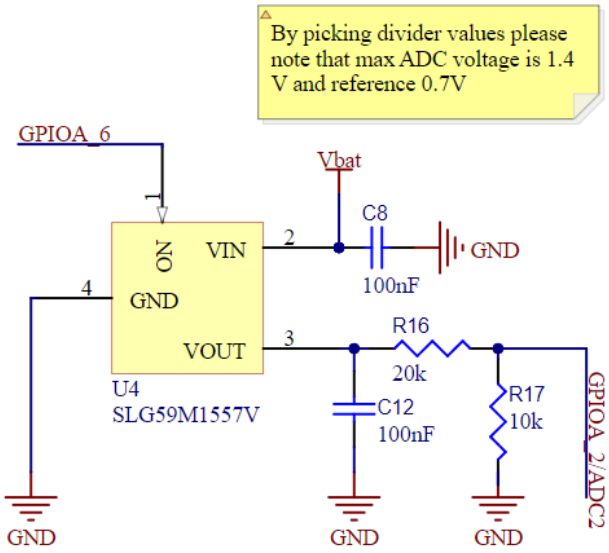

Figure 9. Battery Voltage Measurement

3.4 Valve Control

The solution is meant to be used with 9V bistatic / Latching solenoid valves. To achieve this voltage from the battery, we use a step-up converter U9. As its quiescent current would be too high in this use case, we have used U7 GreenFET switch to completely disconnect it when not used.

Solenoid current consumption is quite high (2-3A peak). To overcome this situation we have placed four EDLC capacitors in series (C24, C26, C27, C30) to be able to support up to 3A current pulses, which are only needed for some 10ms.

As EU154-1 system is very low power, there is no capacity to charge EDLCs with high current; hence R26 is placed as current limiter.

To know when the capacitors are sufficiently charged to switch the valve, R28 and R31 resistors divider is used to measure the voltage using ADC3 channel. The complete power supply for valve control schematic is shown in Figure 10.

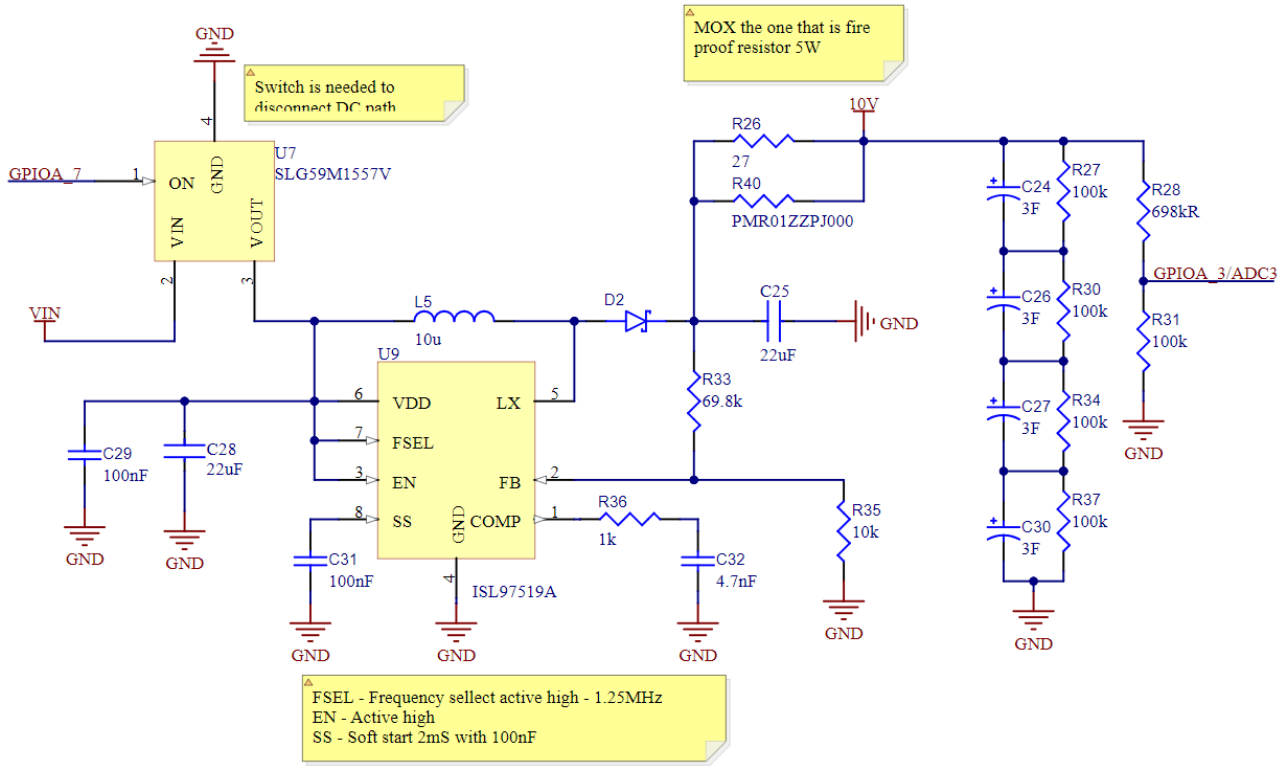

Figure 10. Step-up converter for the valve's solenoid control

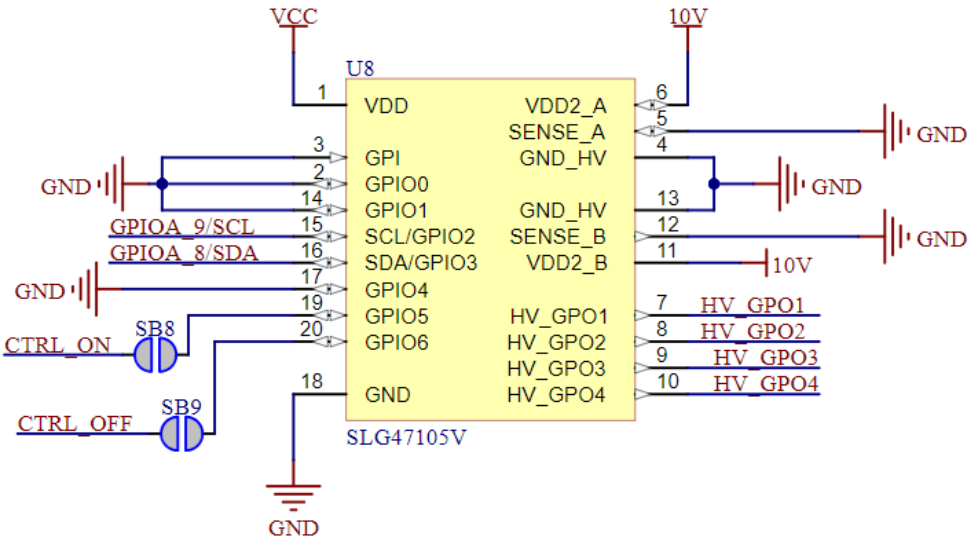

Figure 11. HVPAK to drive the solenoid

3.5 UART Debug Port

The UART0 module (available on J8 pins, see Figure 12) is used for debugging purposes (3.3V level). J8 is through hole 1.27mm pitch connector that is not mounted. It can be soldered standard 1.27mm pitch headers or needle adapter could be used as well.

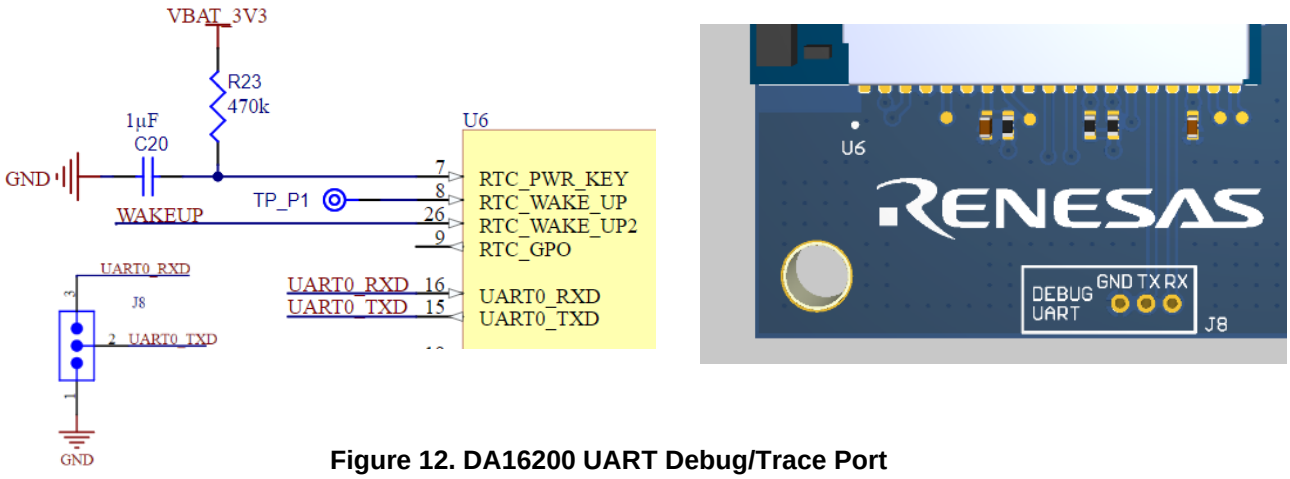

Figure 12. DA16200 UART Debug/Trace Port

Table 1. Debug/Trace Test Points

J8 pins	Function
3	UART0 TXD
2	UART0 RXD
1	GND

3.6 SWD – Serial Wire Debug Interface

The Renesas DA16200 MCU can be programmed using the 10-pin SWD connector J1, directly connected to the MCU, Figure 13 by using Segger® J-Link.

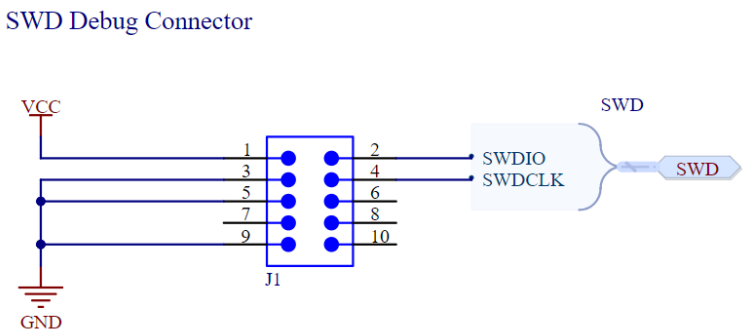

Figure 13. DA16200 MCU Debug/Programming SWD Connector

3.7 USB Device Port

The USB Device port J2 is used only for powering the board, i.e. charging its battery. There is also an option to use a solar panels with USB connector without voltage regulation. In this case it is needed to shorten correct solder bridge. By default, SB1 is closed and SB2 is left open.

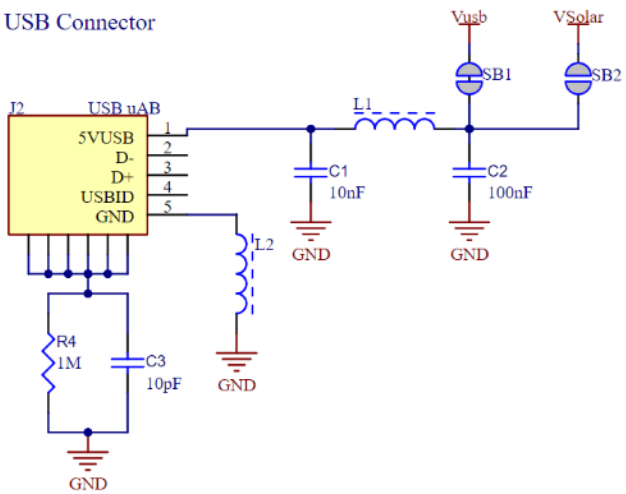

Figure 14. USB Connector

3.8 LEDs and Buttons

There are seven LEDs on the board displaying hardware and software status. First 4 LEDs in Figure 15 are used to display state of the system and are connected to DA16600MOD GPIO pins.

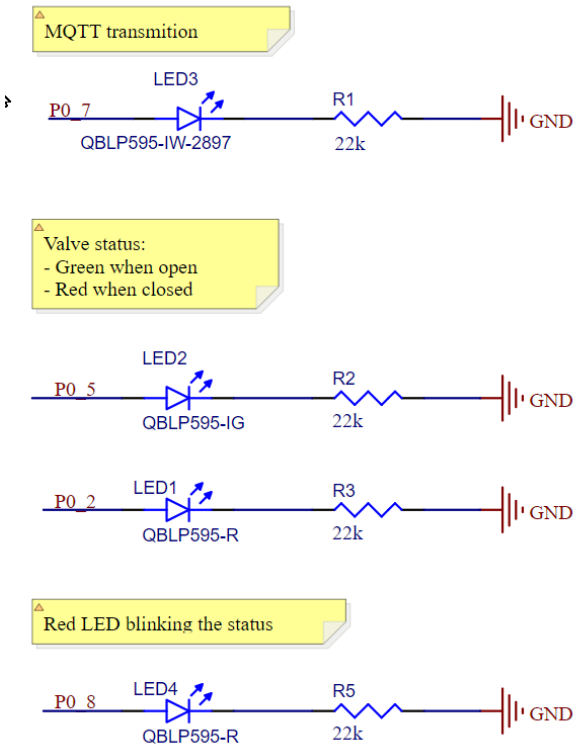

Figure 15. Status LEDs

LED5 is connected to ISL9111A DC/DC Boost converter (Figure 16) and it is lit in case of fault.

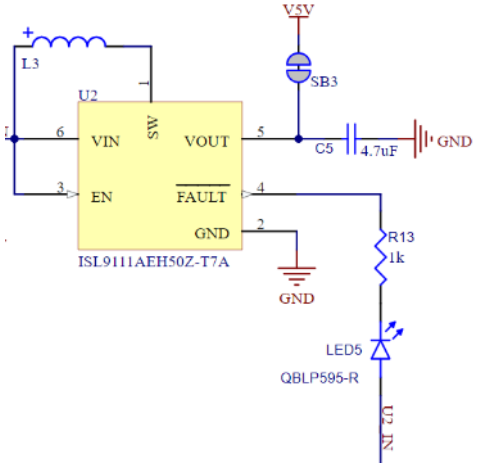

Figure 16. DC/DC Boost Converter Status LED

LED6 is connected to ISL9301 PPR pin and is indicating the status of external power supply. LED6 displays charging status. If the battery is charged, LED7 is ON. If external power supply is on (LED6 ON) and LED7 is off – battery is then fully charged.

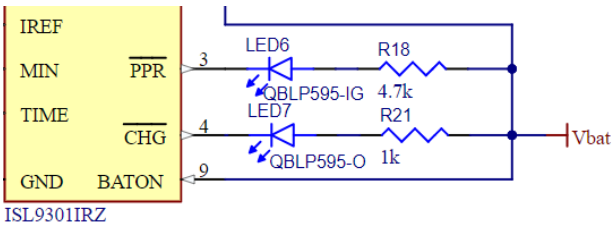

Figure 17. Power and Charging State LEDs

As it is shown in Figure 18, there are also three push buttons:

- SW1: used as a valve close button, connected to DA16600MOD GPIOC_7
- SW2: used as a valve open button, connected to DA16600MOD GPIOC_8
- SW3: used as a wakeup button, connected to DA16600MOD RTC_WAKE_UP2

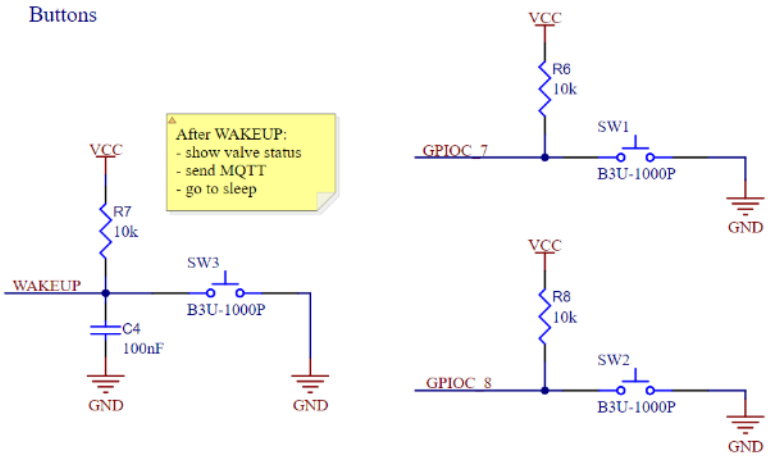

Figure 18. User Buttons

4. BOM

n.	Manufacturer	Manufacturer P/N	Description	Proj. Reference	pcs/ unit	Mount
1	KEMET	C0402C103K5RAC-TU	Chip Capacitor, 10nF +/-20%, 50V, 0402, Thickness 0.6 mm	C1	1	YES
2	Murata	GRM155R71H104KE14D	Chip Capacitor, 100nF +/-20%, 50V, 0402, Thickness 0.6 mm	C2, C4, C7, C8, C12, C21, C22, C29, C31, C33	10	YES
3	Yageo	CC0402JRNPO9BN100	Chip Capacitor, 10 pF, +/- 5%, 50 V, 0402 (1005 Metric)	C3	1	
4	Murata	GRM155R61A475MEAAD	Chip Capacitor, 4.7uF +/-20%, 10V, X5R, 0402 (1005 Metric)	C5, C6, C10	3	
5	Murata	GRM155R60J106ME15D	Chip Capacitor, 10µF +/-40%, 6.3V, 0402, Thickness 0.6 mm	C9, C13, C18, C19	4	
6	Samsung	CL05A105KP5NNNC	Chip Capacitor, 1µF +/-20%, 10V, 0402, Thickness 0.6 mm	C11, C16, C17, C20	4	
7	Samsung	CL10A226MP8NUNE	Chip Capacitor, 22µF +/-20%, 10V, 0603, Thickness 0.9 mm	C14	1	
8	Murata	GRM155C81E225KE11D	Multilayer Ceramic Capacitors MLCC - SMD/SMT 0805 22uF 25volts X5R +/-20% GP	C23, C25, C28, C34	4	
9	Maxwell Technologies	BCAP0003P270S01	Capacitor 3F -10% +20% 2.7V T/H	C24, C26, C27, C30	4	
10	Yageo	CC0402KRX7R9BB472	Cap Ceramic 0.0047uF 50V X7R 10% SMD 0402 125□□ Paper T/R	C32	1	
11	Nexperia	RB521CS30L,315	Schottky Barrier Rectifier, 30 V, 100 mA, -65 to 125 degC, 2-Pin DFN1006-2, RoHS, Tape and Reel	D1	1	
12	Vishay Semiconductors	MSS1P4-M3/89A	Schottky Diodes & Rectifiers 1.0 Amp 40 Volt	D2	1	
13	Amphenol ICC / FCI	20021121-00010C8LF	10 Position, 2 Rows, Header 1.27mm Pitch, SMT	J1	1	
14	Molex	47589-0001	USB Micro AB 2.0 Female 5 Pin Right Angle Molex	J2	1	
15	Phoenix Contact	1843606	Terminal Block 3.5mm pitch 2pos Top Entry	J3	1	
16	Molex	501568-0207	Male Header, Pitch 1mm, 1 x 2 Position, Height 3.2mm, Solder RA SMD, RoHS	J4	1	
17	Molex	395011002	Terminal Block 3.5mm pitch 2pos Top Entry Black	J5	1	
18	Phoenix Contact	1863152	Barrier Strip Terminal Block, Plug, 8A, 1.5mm2, 1863152	J9, J11	2	
19	Murata	BLM18AG121SN1D	Chip Ferrite Bead for General Use, 120 Ohm, 500 mA, -55 to 125 degC, 0603 (1608 Metric), RoHS, Tape and Reel	L1, L2	2	
20	Taiyo Yuden	NRS4012T4R7MDGJ	Inductor Power Shielded Wirewound 4.7uH 20% 100KHz Ferrite 1.5A 0.114Ohm DCR 1515 T/R	L3	1	
21	Murata	LQM18PN2R2MGHD	Ind Power Chip Shielded Multi-Layer 2.2uH 20% 1MHz Ferrite 1.15A 0603 Paper T/R	L4	1	
22	Taiyo Yuden	NRS5030T100MMGJV	Inductor Power Shielded Wirewound 10uH 20% 100KHz Ferrite 1.7A 0.091Ohm DCR T/R	L5	1	
23	QT-Brightek	QBLP595-R	Chip LED 0402, Red, 0.02 A, 2.0 to 2.5 V, -40 to 80 degC, 2-Pin SMD, RoHS, Tape and Reel	LED1, LED4, LED5	3	
24	QT-Brightek	QBLP595-IG	Chip LED 0402, Green, 0.02 A, 3.1 to 3.7 V, -40 to 80 degC, 2-Pin SMD, RoHS, Tape and Reel	LED2, LED6	2	
25	QT-Brightek	QBLP595-IW-2897	Chip LED 0402, White, 0.02 A, 3.1 to 3.7 V, -40 to 80 degC, 2-Pin SMD, RoHS, Tape and Reel	LED3	1	
26	QT-Brightek	QBLP595-O	Chip LED 0402, Orange, 0.02 A, 165 mcd, 3.1 to 3.7 V, -40 to 80 degC, 2-Pin SMD, RoHS, Tape and Reel	LED7	1	
27	Yageo	RC0402FR-1322KL	Chip Resistor, 22 kOhms, +/-1 %, 63 mW, -55 to 155 degC, 0402	R1, R2, R3, R5	4	
28	Yageo	RC0402JR-071ML	1M 0.063W 5% 0402 (1005 Metric) SMD	R4	1	
29	Yageo	RC0402FR-0710KP	Chip Resistor, 10 kOhms, +/-1 %, 63 mW, -55 to 125 degC, 0402	R6, R7, R8, R17, R24, R25, R35	7	
30	Yageo	RC0402JR-070RL	Jumper 0402	R10, R12, R29, R38	4	

31	Yageo	RC0402JR-071KL	Chip Resistor, 1 kOhms, +/-5 %, 63 mW, -55 to 155 degC, 0402	R13, R15, R21	3	YES
32	Yageo	RC0402FR-07100KL	Chip Resistor, 100 kOhms, +/-1 %, 63 mW, -55 to 155 degC, 0402	R14	1	
33	Yageo	RC0402FR-0720KL	Chip Resistor, 20 kOhms, +/-1 %, 63 mW, -55 to 155 degC, 0402	R16	1	
34	Yageo	RC0402FR-074K7L	Chip Resistor, 4,7 kOhms, +/-1 %, 63 mW, -55 to 155 degC, 0402	R18	1	
35	Yageo	RC0402FR-079K53L	Chip Resistor, 9.53 kOhms, +/-1 %, 63 mW, -55 to 155 degC, 0402	R19	1	
36	Yageo	RC0402FR-0778K7L	Chip Resistor, 78.7 kOhms, +/-1 %, 63 mW, -55 to 155 degC, 0402	R20	1	
37	Yageo	RC0402FR-07715KL	Chip Resistor, 715 kOhms, +/-1 %, 63 mW, -55 to 155 degC, 0402	R22	1	
38	Yageo	RC0402FR-07470KL	Chip Resistor, 470 kOhms, +/-1 %, 63 mW, -55 to 155 degC, 0402	R23	1	
39	TE Connectivity	ROX5SSJ27R	Resistor Power Metal Oxide Film 27Ohm 5% 5W 2-Pin Through Hole Ammo Pack	R26	1	
40	Yageo	RC0402JR-07100KL	100K 0.063W 1% 0402 (1005 Metric) SMD	R27, R30, R31, R34, R37	5	
41	Yageo	RC0402FR-07698KL	Chip Resistor 698K OHM 1% 1/16W 0402	R28	1	
42	Yageo	RC0402FR-0769K8L	Chip Resistor, 69.8 kOhms, +/-1 %, 63 mW, -55 to 125 degC, 0402	R33	1	
43	Yageo	RC0402JR-071KL	Chip Resistor, 1 kOhms, +/-5 %, 63 mW, -55 to 155 degC, 0402	R36	1	
44	Omron	B3U-1000P	Tactile Switch, SPST-NO, 0.05 A, 12 V, -25 to 70 degC, 2-Pin SMD, RoHS, Tape and Reel	SW1, SW2, SW3	3	
45	ITT C&K	JS102011SCQN	Slide Switch SPDT Surface Mount	SW4	1	
46	Renesas	SLG59H1401C	Dual Input Single Output, 3 A Power Multiplexer, 6V Max.	U1	1	
47	Renesas	ISL9111AEH50Z-T7A	Boost Switching Regulator IC Positive Fixed 5V 1 Output 800mA (Switch) SOT-23-6	U2	1	
48	Renesas	ISL9301IRZ-T	Charger IC Lithium Ion/Polymer 10-DFN (3x3)	U3	1	
49	Renesas	SLG59M1557VTR	Power Switch/Driver 1:1 P-Channel 1A 4-STDFN (1x1)	U4, U7	2	
50	Renesas	ISL9122AIRNZ-T7A	3.3V DC/DC, DFN8-B package.	U5	1	
51	Renesas	DA16600MOD-AAC4WA32	DA16600MOD, WiFi, 802.11b/g/n, Bluetooth LE, Combo Module, SM	U6	1	
52	Renesas	SLG47105V	GreenPAK Programmable Mixed-Signal Matrix	U8	1	
53	Renesas	ISL97519AIUZ-TK	ISL97519A Series 5.5 V 600 kHz/1.2 MHz PWM Step-Up Regulator - MSOP-8	U9	1	

5. Board Layout

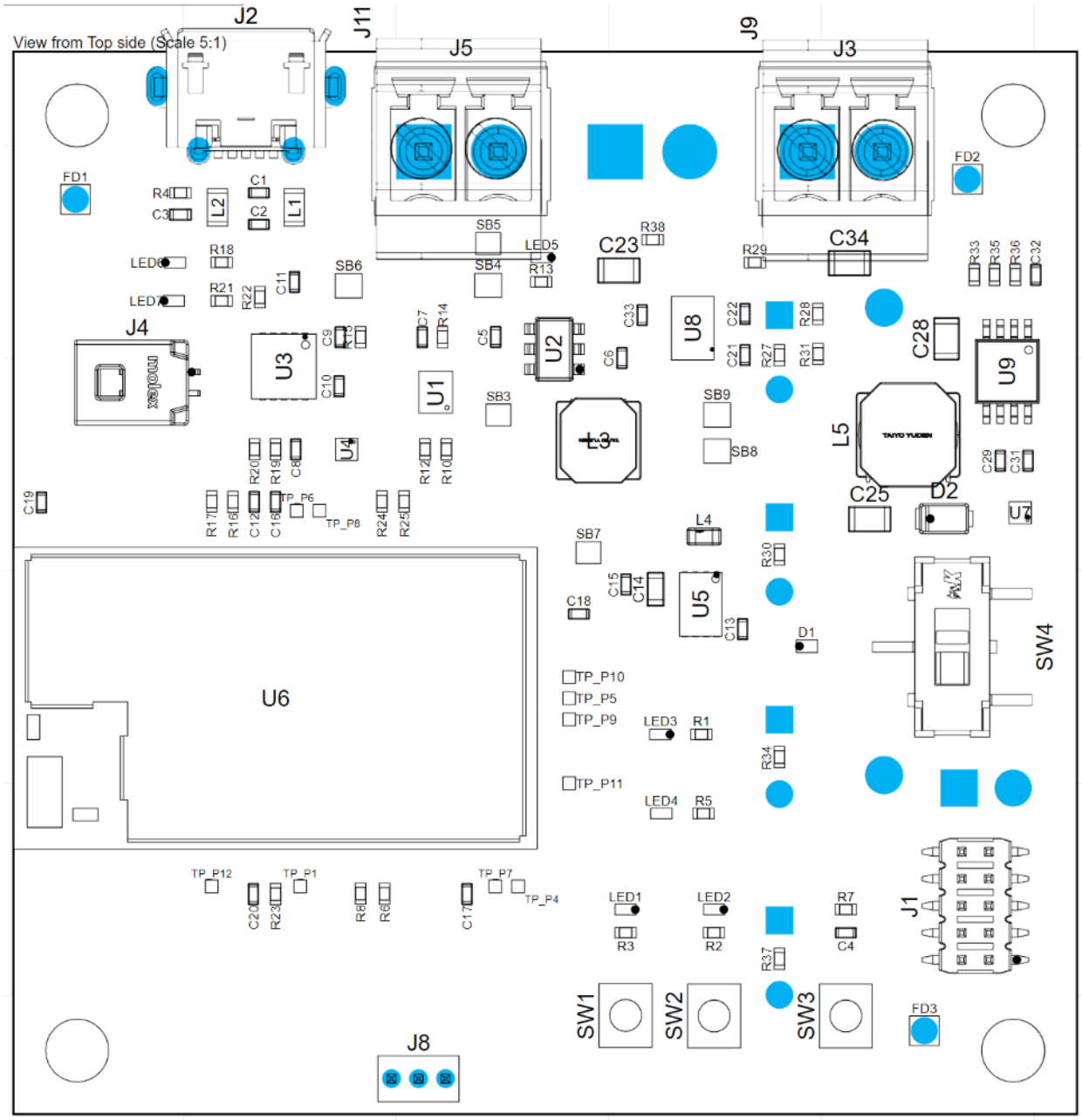

Figure 19. EU154-1 TOP Assembly Drawing

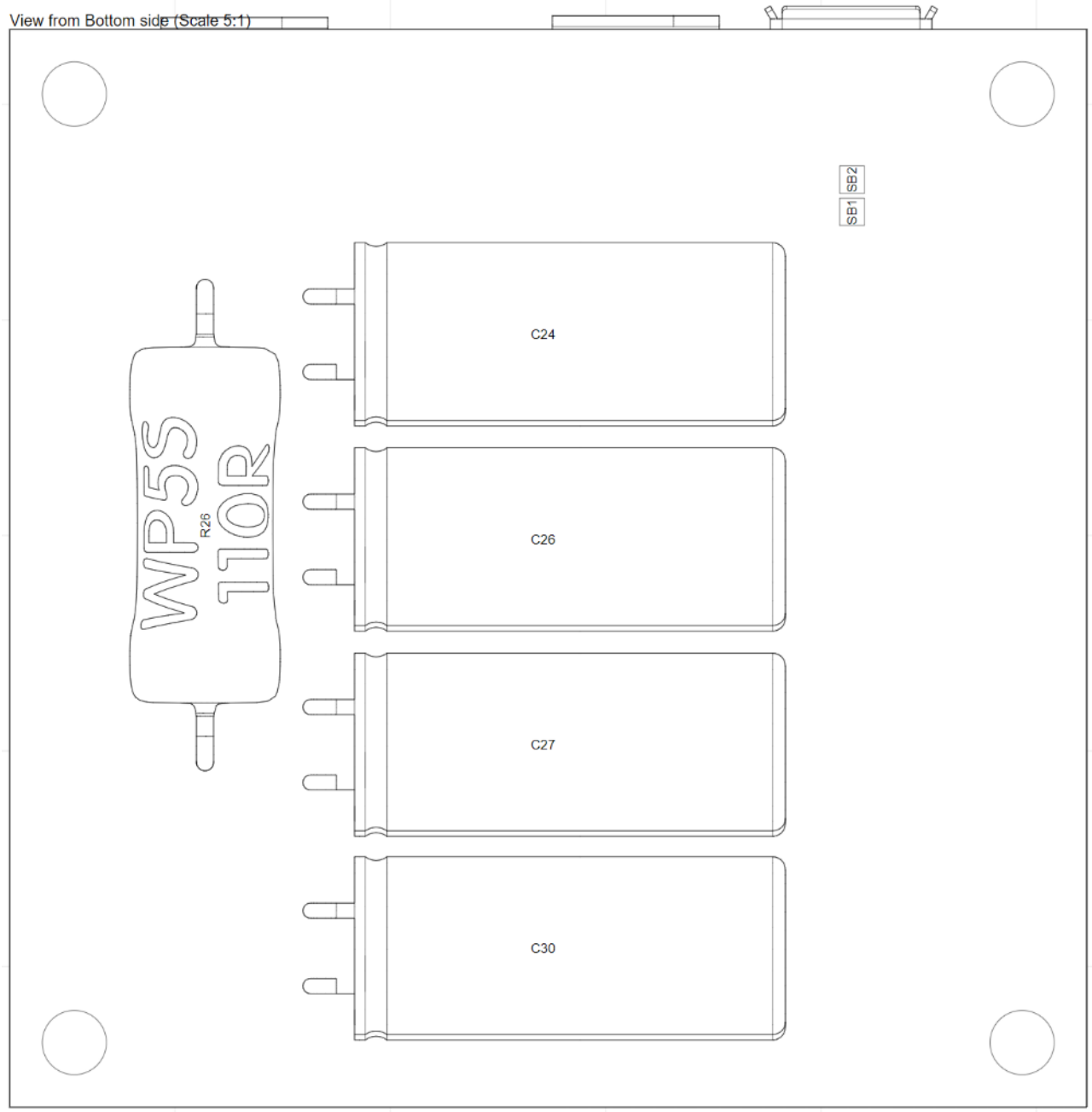

Figure 20. EU154-1 BOT Assembly Drawing

6. Schematics

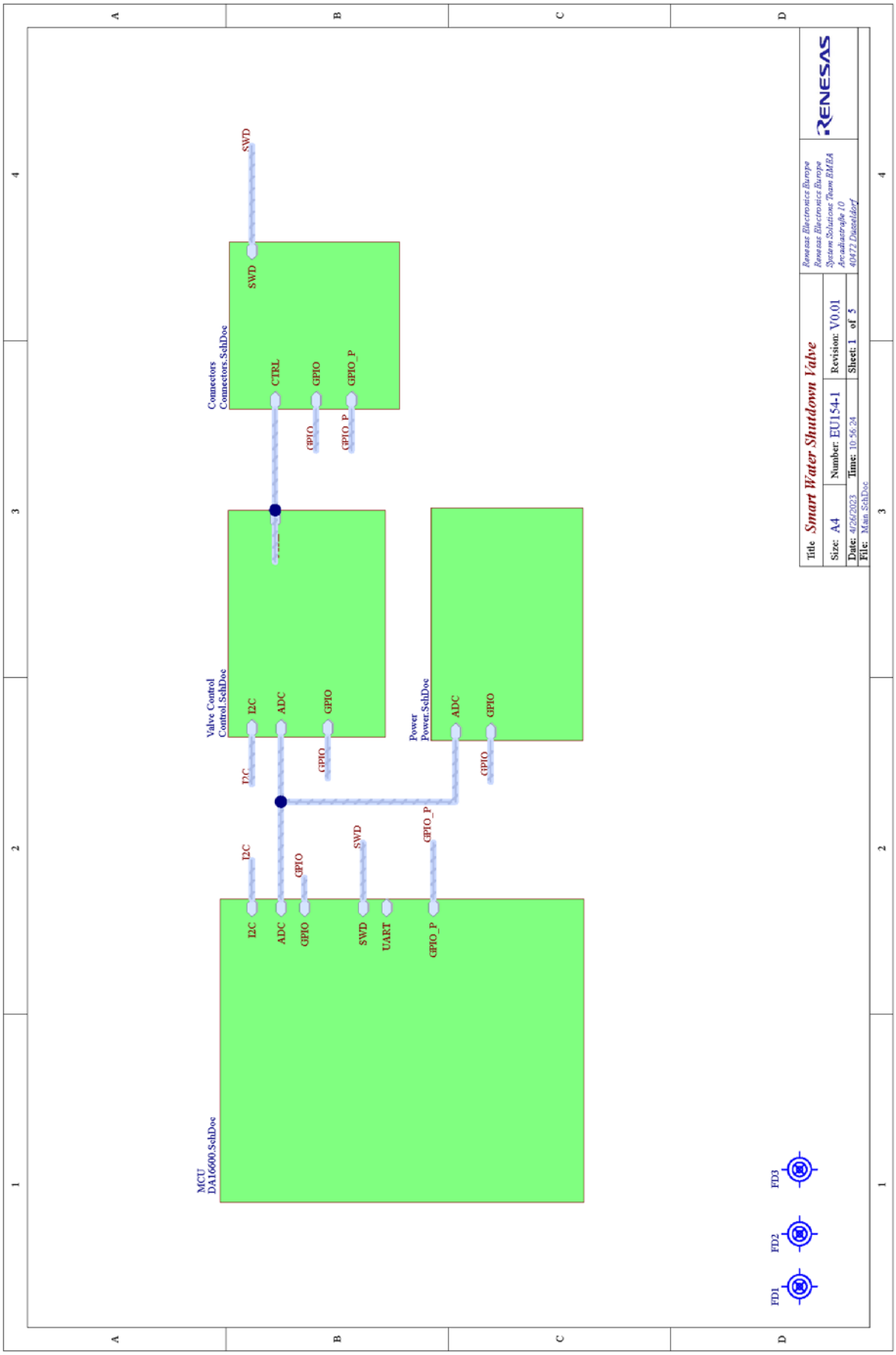

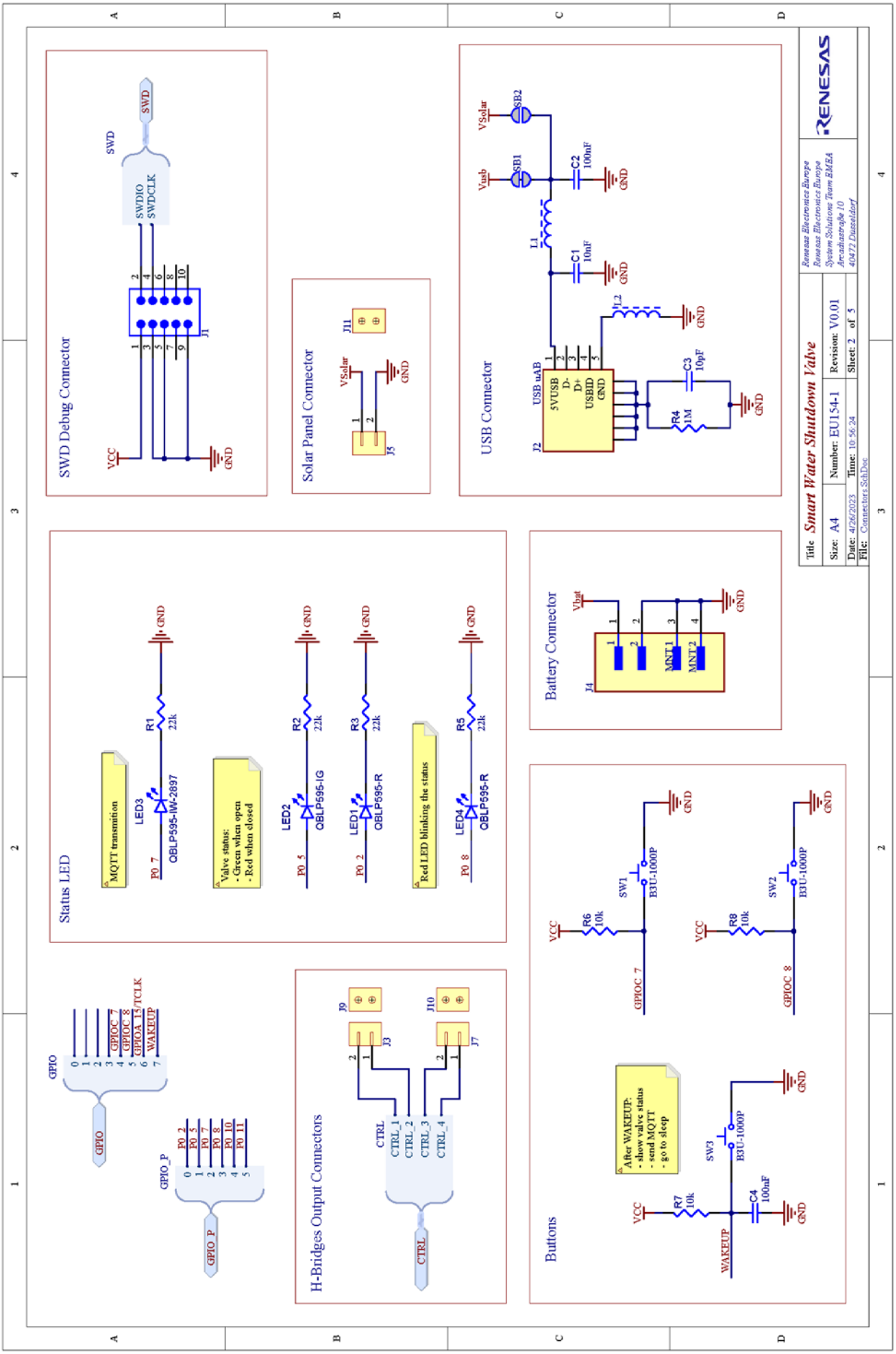
SWD Debug Connector
SWD
SWDIO
SWDCLK
J1
VCC
GND
Solar Panel Connector
VSolar
J11
J5
USB Connector
VSolar
Vusb
SB2
SB1
C2
100nF
L1
C1
10nF
L2
C3
10pF
R4
1M
USB uaB
5VUSB
D-
D+
USBID
GND
J2
Status LED
MQTT transmition
R1
22k
LED3
QBLP595-IW-2897
P0_7
Valve status:
- Green when open
- Red when closed
R2
22k
LED2
QBLP595-IG
P0_5
R3
22k
LED1
QBLP595-R
P0_2
Red LED blinking the status
R5
22k
LED4
QBLP595-R
P0_8
Battery Connector
Vbat
J4
MNT1
MNT2
GPIO
GPIO_7
GPIO_8
GPIOA_15/TCLK
WAKEUP
GPIO_P
P0_2
P0_5
P0_7
P0_8
P0_10
P0_11
H-Bridges Output Connectors
J9
J3
J10
J7
CTRL
CTRL_1
CTRL_2
CTRL_3
CTRL_4
Buttons
R6
10k
SW1
B3U-1000P
GPIOC_7
R8
10k
SW2
B3U-1000P
GPIOC_8
After WAKEUP:
- show valve status
- send MQTT
- go to sleep
R7
10k
SW3
B3U-1000P
C4
100nF
WAKEUP
Title Smart Water Shutdown Valve
Size: A4
Number: EU154-1
Revision: V0.01
Date: 4/26/2023
Time: 10:56:24
Sheet: 2 of 5
File: Connectors.SchDoc
Renesas Electronics Europe
Renesas Electronics Europe
System Solutions Team EMEA
Arcadiastraße 10
40472 Düsseldorf
RENESAS

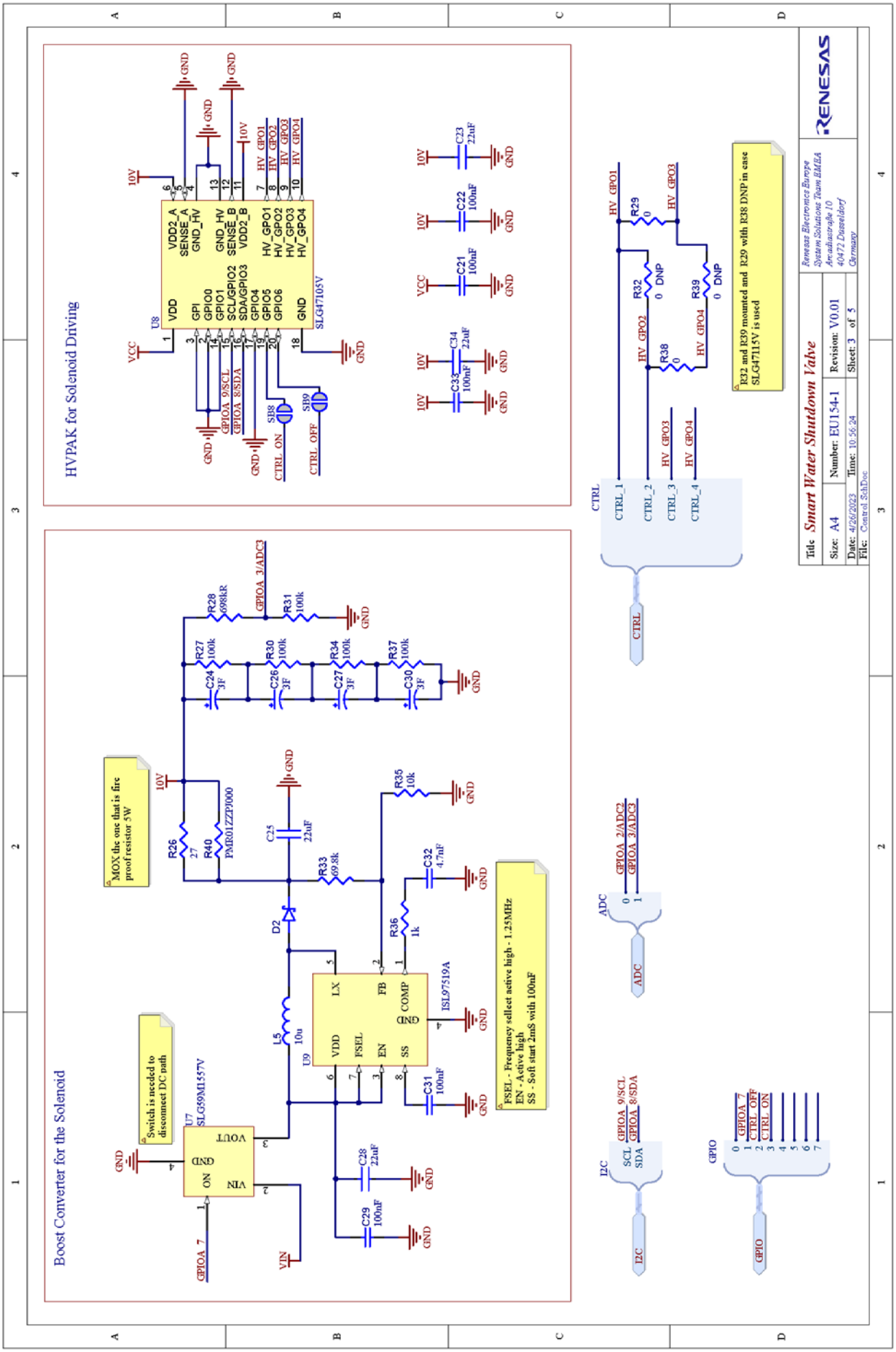
HVPAK for Solenoid Driving
Boost Converter for the Solenoid
Smart Water Shutdown Valve
Title
Size: A4
Number: EU154-1
Revision: V0.01
Date: 4/26/2023
Time: 10:56:24
Sheet: 3 of 5
File: Control.SchDoc
Renesas Electronics Europe
System Solutions Team EMEA
Arcadiastraße 10
40472 Düsseldorf
Germany
RENESAS
U8
SLG47105V
U7
SLG59M1557V
U9
ISL97519A
MOX the one that is fire proof resistor 5W
Switch is needed to disconnect DC path
FSEL - Frequency select active high - 1.25MHz
EN - Active high
SS - Soft start 2ms with 100nF
R32 and R39 mounted and R29 with R38 DNP in case SLG47115V is used
CTRL
ADC
I2C
GPIO

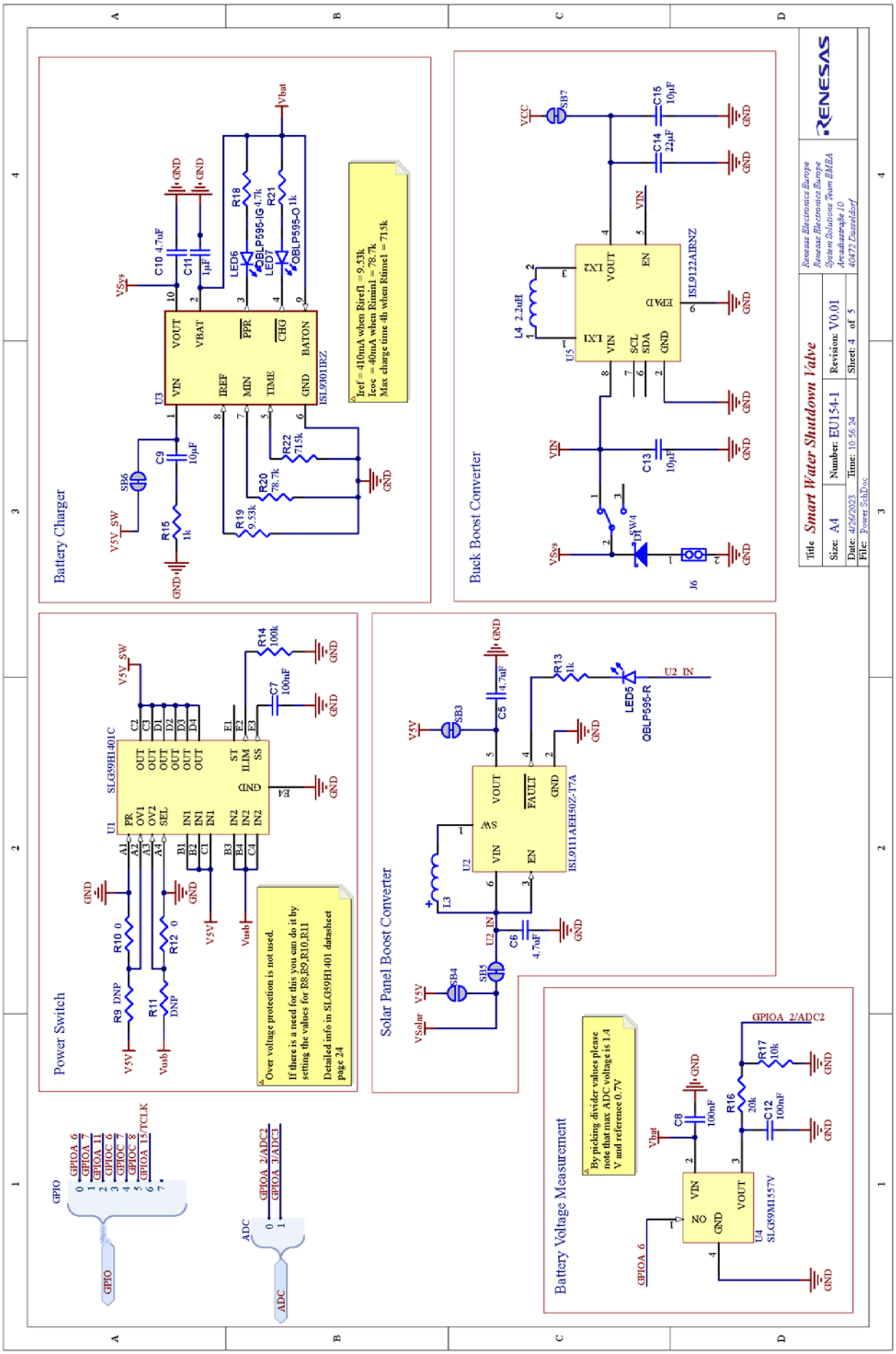
Battery Charger
Buck Boost Converter
Power Switch
Solar Panel Boost Converter
Battery Voltage Measurement
Iref = 410mA when Rirefl = 9.53k
Icoc = 40mA when Riminl = 78.7k
Max charge time 4h when Rtimel = 715k
Over voltage protection is not used.
If there is a need for this you can do it by setting the values for R8,R9,R10,R11
Detailed info in SLG59H1401 datasheet page 24
By picking divider values please note that max ADC voltage is 1.4 V and reference 0.7V
Title Smart Water Shutdown Valve
Size: A4
Number: EU154-1
Revision: V0.01
Date: 4/26/2023
Time: 10:56:24
Sheet: 4 of 5
File: Power.SchDoc
Renesas Electronics Europe
Renesas Electronics Europe
System Solutions Team EMEA
Arcadiastraße 10
40472 Düsseldorf

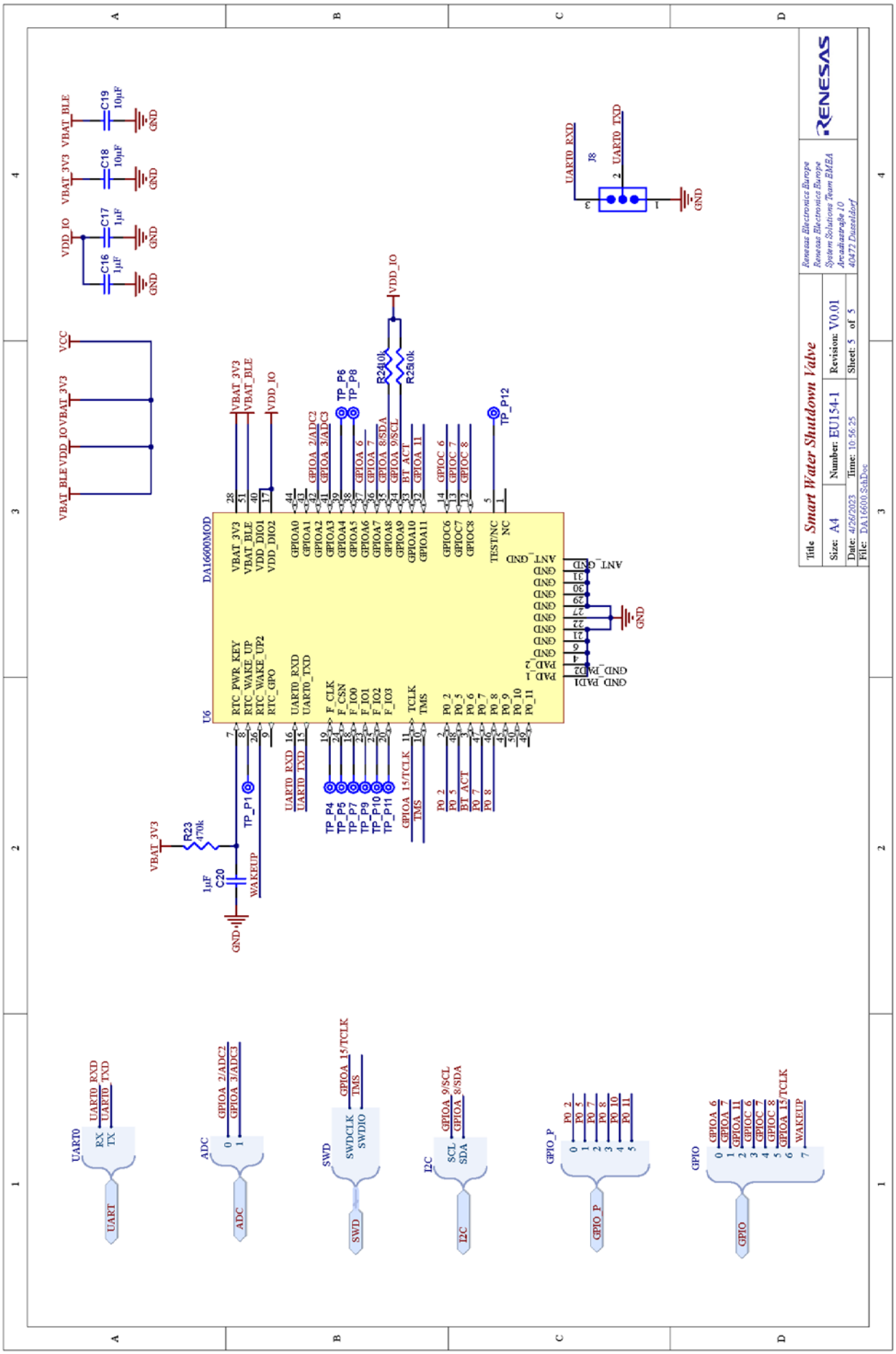
Title Smart Water Shutdown Valve
Size: A4
Number: EU154-1
Revision: V0.01
Date: 4/26/2023
Time: 10:56:25
Sheet: 5 of 5
File: DA16600.SchDoc
Renesas Electronics Europe
Renesas Electronics Europe
System Solutions Team EMEA
Arcadiastraße 10
40472 Düsseldorf
RENESAS
DA16600MOD
U6
J8
UARTO_RXD
UARTO_TXD
VDD_IO
VBAT_3V3
VBAT_BLE
VCC
C16 1µF
C17 1µF
C18 10µF
C19 10µF
R23 470k
C20 1µF
R24 10k
R25 10k
TP_P1
TP_P4
TP_P5
TP_P6
TP_P7
TP_P8
TP_P9
TP_P10
TP_P11
TP_P12
WAKEUP
GND
UARTO
RX
TX
UART
ADC
GPIOA_2/ADC2
GPIOA_3/ADC3
SWD
SWDCLK
SWDIO
GPIOA_15/TCLK
TMS
I2C
SCL
SDA
GPIOA_9/SCL
GPIOA_8/SDA
GPIO_P
P0_2
P0_5
P0_7
P0_8
P0_10
P0_11
GPIO
GPIOA_6
GPIOA_7
GPIOA_11
GPIOC_6
GPIOC_7
GPIOC_8
WAKEUP

7. Certifications

The EU154-1 Smart Water Actuator Solution Kit complies with the laws and regulations described below.

7.1 Europe CE

Hereby, Renesas Electronics Europe GmbH, declares that the EU154-1 Smart Water Actuator Solution Kit (EU154-SMTSHDNPOCZ) is in compliance with the essential requirements and other relevant provisions of Directive 2014/53/EU (Radio Equipment Directive).

References

Revision History

Rev.	Date	Description	
		Page	Summary
0.01	8 Aug 2023		Initial version.
01.01.	11.08.2023		Editorial changes, adding document numbers

General Precautions in the Handling of Microprocessing Unit and Microcontroller Unit Products

The following usage notes are applicable to all Microprocessing unit and Microcontroller unit products from Renesas. For detailed usage notes on the products covered by this document, refer to the relevant sections of the document as well as any technical updates that have been issued for the products.

1. Precaution against Electrostatic Discharge (ESD)

   A strong electrical field, when exposed to a CMOS device, can cause destruction of the gate oxide and ultimately degrade the device operation. Steps must be taken to stop the generation of static electricity as much as possible, and quickly dissipate it when it occurs. Environmental control must be adequate. When it is dry, a humidifier should be used. This is recommended to avoid using insulators that can easily build up static electricity. Semiconductor devices must be stored and transported in an anti-static container, static shielding bag or conductive material. All test and measurement tools including work benches and floors must be grounded. The operator must also be grounded using a wrist strap. Semiconductor devices must not be touched with bare hands. Similar precautions must be taken for printed circuit boards with mounted semiconductor devices.
2. Processing at power-on

   The state of the product is undefined at the time when power is supplied. The states of internal circuits in the LSI are indeterminate and the states of register settings and pins are undefined at the time when power is supplied. In a finished product where the reset signal is applied to the external reset pin, the states of pins are not guaranteed from the time when power is supplied until the reset process is completed. In a similar way, the states of pins in a product that is reset by an on-chip power-on reset function are not guaranteed from the time when power is supplied until the power reaches the level at which resetting is specified.
3. Input of signal during power-off state

   Do not input signals or an I/O pull-up power supply while the device is powered off. The current injection that results from input of such a signal or I/O pull-up power supply may cause malfunction and the abnormal current that passes in the device at this time may cause degradation of internal elements. Follow the guideline for input signal during power-off state as described in your product documentation.
4. Handling of unused pins

   Handle unused pins in accordance with the directions given under handling of unused pins in the manual. The input pins of CMOS products are generally in the high-impedance state. In operation with an unused pin in the open-circuit state, extra electromagnetic noise is induced in the vicinity of the LSI, an associated shoot-through current flows internally, and malfunctions occur due to the false recognition of the pin state as an input signal become possible.
5. Clock signals

   After applying a reset, only release the reset line after the operating clock signal becomes stable. When switching the clock signal during program execution, wait until the target clock signal is stabilized. When the clock signal is generated with an external resonator or from an external oscillator during a reset, ensure that the reset line is only released after full stabilization of the clock signal. Additionally, when switching to a clock signal produced with an external resonator or by an external oscillator while program execution is in progress, wait until the target clock signal is stable.
6. Voltage application waveform at input pin

   Waveform distortion due to input noise or a reflected wave may cause malfunction. If the input of the CMOS device stays in the area between V_{IL} (Max.) and V_{IH} (Min.) due to noise, for example, the device may malfunction. Take care to prevent chattering noise from entering the device when the input level is fixed, and also in the transition period when the input level passes through the area between V_{IL} (Max.) and V_{IH} (Min.).
7. Prohibition of access to reserved addresses

   Access to reserved addresses is prohibited. The reserved addresses are provided for possible future expansion of functions. Do not access these addresses as the correct operation of the LSI is not guaranteed.
8. Differences between products

   Before changing from one product to another, for example to a product with a different part number, confirm that the change will not lead to problems. The characteristics of a microprocessing unit or microcontroller unit products in the same group but having a different part number might differ in terms of internal memory capacity, layout pattern, and other factors, which can affect the ranges of electrical characteristics, such as characteristic values, operating margins, immunity to noise, and amount of radiated noise. When changing to a product with a different part number, implement a system-evaluation test for the given product.

Notice

1. Descriptions of circuits, software and other related information in this document are provided only to illustrate the operation of semiconductor products and application examples. You are fully responsible for the incorporation or any other use of the circuits, software, and information in the design of your product or system. Renesas Electronics disclaims any and all liability for any losses and damages incurred by you or third parties arising from the use of these circuits, software, or information.
2. Renesas Electronics hereby expressly disclaims any warranties against and liability for infringement or any other claims involving patents, copyrights, or other intellectual property rights of third parties, by or arising from the use of Renesas Electronics products or technical information described in this document, including but not limited to, the product data, drawings, charts, programs, algorithms, and application examples.
3. No license, express, implied or otherwise, is granted hereby under any patents, copyrights or other intellectual property rights of Renesas Electronics or others.
4. You shall not alter, modify, copy, or reverse engineer any Renesas Electronics product, whether in whole or in part. Renesas Electronics disclaims any and all liability for any losses or damages incurred by you or third parties arising from such alteration, modification, copying or reverse engineering.
5. Renesas Electronics products are classified according to the following two quality grades: “Standard” and “High Quality”. The intended applications for each Renesas Electronics product depends on the product’s quality grade, as indicated below.
   "Standard": Computers; office equipment; communications equipment; test and measurement equipment; audio and visual equipment; home electronic appliances; machine tools; personal electronic equipment; industrial robots; etc.
   "High Quality": Transportation equipment (automobiles, trains, ships, etc.); traffic control (traffic lights); large-scale communication equipment; key financial terminal systems; safety control equipment; etc.
   Unless expressly designated as a high reliability product or a product for harsh environments in a Renesas Electronics data sheet or other Renesas Electronics document, Renesas Electronics products are not intended or authorized for use in products or systems that may pose a direct threat to human life or bodily injury (artificial life support devices or systems; surgical implantations; etc.), or may cause serious property damage (space system; undersea repeaters; nuclear power control systems; aircraft control systems; key plant systems; military equipment; etc.). Renesas Electronics disclaims any and all liability for any damages or losses incurred by you or any third parties arising from the use of any Renesas Electronics product that is inconsistent with any Renesas Electronics data sheet, user’s manual or other Renesas Electronics document.
6. When using Renesas Electronics products, refer to the latest product information (data sheets, user’s manuals, application notes, “General Notes for Handling and Using Semiconductor Devices” in the reliability handbook, etc.), and ensure that usage conditions are within the ranges specified by Renesas Electronics with respect to maximum ratings, operating power supply voltage range, heat dissipation characteristics, installation, etc. Renesas Electronics disclaims any and all liability for any malfunctions, failure or accident arising out of the use of Renesas Electronics products outside of such specified ranges.
7. Although Renesas Electronics endeavors to improve the quality and reliability of Renesas Electronics products, semiconductor products have specific characteristics, such as the occurrence of failure at a certain rate and malfunctions under certain use conditions. Unless designated as a high reliability product or a product for harsh environments in a Renesas Electronics data sheet or other Renesas Electronics document, Renesas Electronics products are not subject to radiation resistance design. You are responsible for implementing safety measures to guard against the possibility of bodily injury, injury or damage caused by fire, and/or danger to the public in the event of a failure or malfunction of Renesas Electronics products, such as safety design for hardware and software, including but not limited to redundancy, fire control and malfunction prevention, appropriate treatment for aging degradation or any other appropriate measures. Because the evaluation of microcomputer software alone is very difficult and impractical, you are responsible for evaluating the safety of the final products or systems manufactured by you.
8. Please contact a Renesas Electronics sales office for details as to environmental matters such as the environmental compatibility of each Renesas Electronics product. You are responsible for carefully and sufficiently investigating applicable laws and regulations that regulate the inclusion or use of controlled substances, including without limitation, the EU RoHS Directive, and using Renesas Electronics products in compliance with all these applicable laws and regulations. Renesas Electronics disclaims any and all liability for damages or losses occurring as a result of your noncompliance with applicable laws and regulations.
9. Renesas Electronics products and technologies shall not be used for or incorporated into any products or systems whose manufacture, use, or sale is prohibited under any applicable domestic or foreign laws or regulations. You shall comply with any applicable export control laws and regulations promulgated and administered by the governments of any countries asserting jurisdiction over the parties or transactions.
10. It is the responsibility of the buyer or distributor of Renesas Electronics products, or any other party who distributes, disposes of, or otherwise sells or transfers the product to a third party, to notify such third party in advance of the contents and conditions set forth in this document.
11. This document shall not be reprinted, reproduced or duplicated in any form, in whole or in part, without prior written consent of Renesas Electronics.
12. Please contact a Renesas Electronics sales office if you have any questions regarding the information contained in this document or Renesas Electronics products.

(Note1) “Renesas Electronics” as used in this document means Renesas Electronics Corporation and also includes its directly or indirectly controlled subsidiaries.
(Note2) “Renesas Electronics product(s)” means any product developed or manufactured by or for Renesas Electronics.

(Rev.4.0-1 November 2017)

Corporate Headquarters

TOYOSU FORESIA, 3-2-24 Toyosu, Koto-ku, Tokyo 135-0061, Japan
www.renesas.com

Trademarks

Renesas and the Renesas logo are trademarks of Renesas Electronics Corporation. All trademarks and registered trademarks are the property of their respective owners.

Contact information

For further information on a product, technology, the most up-to-date version of a document, or your nearest sales office, please visit: www.renesas.com/contact/.

© 2023 Renesas Electronics Corporation. All rights reserved.