User's Manual

32

RX23E-A Group

User's Manual: Hardware

RENESAS 32-Bit MCU
RX Family／RX200 Series

All information contained in these materials, including products and product specifications, represents information on the product at the time of publication and is subject to change by Renesas Electronics Corp. without notice. Please review the latest information published by Renesas Electronics Corp. through various means, including the Renesas Electronics Corp. website (http://www.renesas.com).

Renesas Electronics
www.renesas.com

Rev.1.30 Dec 2024

Notice

1. Descriptions of circuits, software and other related information in this document are provided only to illustrate the operation of semiconductor products and application examples. You are fully responsible for the incorporation or any other use of the circuits, software, and information in the design of your product or system. Renesas Electronics disclaims any and all liability for any losses and damages incurred by you or third parties arising from the use of these circuits, software, or information.
2. Renesas Electronics hereby expressly disclaims any warranties against and liability for infringement or any other claims involving patents, copyrights, or other intellectual property rights of third parties, by or arising from the use of Renesas Electronics products or technical information described in this document, including but not limited to, the product data, drawings, charts, programs, algorithms, and application examples.
3. No license, express, implied or otherwise, is granted hereby under any patents, copyrights or other intellectual property rights of Renesas Electronics or others.
4. You shall be responsible for determining what licenses are required from any third parties, and obtaining such licenses for the lawful import, export, manufacture, sales, utilization, distribution or other disposal of any products incorporating Renesas Electronics products, if required.
5. You shall not alter, modify, copy, or reverse engineer any Renesas Electronics product, whether in whole or in part. Renesas Electronics disclaims any and all liability for any losses or damages incurred by you or third parties arising from such alteration, modification, copying or reverse engineering.
6. Renesas Electronics products are classified according to the following two quality grades: “Standard” and “High Quality”. The intended applications for each Renesas Electronics product depends on the product’s quality grade, as indicated below.
   "Standard": Computers; office equipment; communications equipment; test and measurement equipment; audio and visual equipment; home electronic appliances; machine tools; personal electronic equipment; industrial robots; etc.
   "High Quality": Transportation equipment (automobiles, trains, ships, etc.); traffic control (traffic lights); large-scale communication equipment; key financial terminal systems; safety control equipment; etc.
   Unless expressly designated as a high reliability product or a product for harsh environments in a Renesas Electronics data sheet or other Renesas Electronics document, Renesas Electronics products are not intended or authorized for use in products or systems that may pose a direct threat to human life or bodily injury (artificial life support devices or systems; surgical implantations; etc.), or may cause serious property damage (space system; undersea repeaters; nuclear power control systems; aircraft control systems; key plant systems; military equipment; etc.). Renesas Electronics disclaims any and all liability for any damages or losses incurred by you or any third parties arising from the use of any Renesas Electronics product that is inconsistent with any Renesas Electronics data sheet, user’s manual or other Renesas Electronics document.
7. No semiconductor product is absolutely secure. Notwithstanding any security measures or features that may be implemented in Renesas Electronics hardware or software products, Renesas Electronics shall have absolutely no liability arising out of any vulnerability or security breach, including but not limited to any unauthorized access to or use of a Renesas Electronics product or a system that uses a Renesas Electronics product. RENESAS ELECTRONICS DOES NOT WARRANT OR GUARANTEE THAT RENESAS ELECTRONICS PRODUCTS, OR ANY SYSTEMS CREATED USING RENESAS ELECTRONICS PRODUCTS WILL BE INVULNERABLE OR FREE FROM CORRUPTION, ATTACK, VIRUSES, INTERFERENCE, HACKING, DATA LOSS OR THEFT, OR OTHER SECURITY INTRUSION (“Vulnerability Issues”). RENESAS ELECTRONICS DISCLAIMS ANY AND ALL RESPONSIBILITY OR LIABILITY ARISING FROM OR RELATED TO ANY VULNERABILITY ISSUES. FURTHERMORE, TO THE EXTENT PERMITTED BY APPLICABLE LAW, RENESAS ELECTRONICS DISCLAIMS ANY AND ALL WARRANTIES, EXPRESS OR IMPLIED, WITH RESPECT TO THIS DOCUMENT AND ANY RELATED OR ACCOMPANYING SOFTWARE OR HARDWARE, INCLUDING BUT NOT LIMITED TO THE IMPLIED WARRANTIES OF MERCHANTABILITY, OR FITNESS FOR A PARTICULAR PURPOSE.
8. When using Renesas Electronics products, refer to the latest product information (data sheets, user’s manuals, application notes, “General Notes for Handling and Using Semiconductor Devices” in the reliability handbook, etc.), and ensure that usage conditions are within the ranges specified by Renesas Electronics with respect to maximum ratings, operating power supply voltage range, heat dissipation characteristics, installation, etc. Renesas Electronics disclaims any and all liability for any malfunctions, failure or accident arising out of the use of Renesas Electronics products outside of such specified ranges.
9. Although Renesas Electronics endeavors to improve the quality and reliability of Renesas Electronics products, semiconductor products have specific characteristics, such as the occurrence of failure at a certain rate and malfunctions under certain use conditions. Unless designated as a high reliability product or a product for harsh environments in a Renesas Electronics data sheet or other Renesas Electronics document, Renesas Electronics products are not subject to radiation resistance design. You are responsible for implementing safety measures to guard against the possibility of bodily injury, injury or damage caused by fire, and/or danger to the public in the event of a failure or malfunction of Renesas Electronics products, such as safety design for hardware and software, including but not limited to redundancy, fire control and malfunction prevention, appropriate treatment for aging degradation or any other appropriate measures. Because the evaluation of microcomputer software alone is very difficult and impractical, you are responsible for evaluating the safety of the final products or systems manufactured by you.
10. Please contact a Renesas Electronics sales office for details as to environmental matters such as the environmental compatibility of each Renesas Electronics product. You are responsible for carefully and sufficiently investigating applicable laws and regulations that regulate the inclusion or use of controlled substances, including without limitation, the EU RoHS Directive, and using Renesas Electronics products in compliance with all these applicable laws and regulations. Renesas Electronics disclaims any and all liability for damages or losses occurring as a result of your noncompliance with applicable laws and regulations.
11. Renesas Electronics products and technologies shall not be used for or incorporated into any products or systems whose manufacture, use, or sale is prohibited under any applicable domestic or foreign laws or regulations. You shall comply with any applicable export control laws and regulations promulgated and administered by the governments of any countries asserting jurisdiction over the parties or transactions.
12. It is the responsibility of the buyer or distributor of Renesas Electronics products, or any other party who distributes, disposes of, or otherwise sells or transfers the product to a third party, to notify such third party in advance of the contents and conditions set forth in this document.
13. This document shall not be reprinted, reproduced or duplicated in any form, in whole or in part, without prior written consent of Renesas Electronics.
14. Please contact a Renesas Electronics sales office if you have any questions regarding the information contained in this document or Renesas Electronics products.

(Note1) “Renesas Electronics” as used in this document means Renesas Electronics Corporation and also includes its directly or indirectly controlled subsidiaries.

(Note2) “Renesas Electronics product(s)” means any product developed or manufactured by or for Renesas Electronics.

(Rev.5.0-1 October 2020)

Corporate Headquarters

TOYOSU FORESIA, 3-2-24 Toyosu,
Koto-ku, Tokyo 135-0061, Japan
www.renesas.com

Contact Information

For further information on a product, technology, the most up-to-date version of a document, or your nearest sales office, please visit:
www.renesas.com/contact/

Trademarks

Renesas and the Renesas logo are trademarks of Renesas Electronics Corporation.
All trademarks and registered trademarks are the property of their respective owners.
SuperFlash® is a registered trademark of Silicon Storage Technology, Inc. in several countries including the United States and Japan.

© 2024 Renesas Electronics Corporation. All rights reserved.

General Precautions in the Handling of Microprocessing Unit and Microcontroller Unit Products

The following usage notes are applicable to all Microprocessing unit and Microcontroller unit products from Renesas. For detailed usage notes on the products covered by this document, refer to the relevant sections of the document as well as any technical updates that have been issued for the products.

1. Precaution against Electrostatic Discharge (ESD)
   A strong electrical field, when exposed to a CMOS device, can cause destruction of the gate oxide and ultimately degrade the device operation. Steps must be taken to stop the generation of static electricity as much as possible, and quickly dissipate it when it occurs. Environmental control must be adequate. When it is dry, a humidifier should be used. This is recommended to avoid using insulators that can easily build up static electricity. Semiconductor devices must be stored and transported in an anti-static container, static shielding bag or conductive material. All test and measurement tools including work benches and floors must be grounded. The operator must also be grounded using a wrist strap. Semiconductor devices must not be touched with bare hands. Similar precautions must be taken for printed circuit boards with mounted semiconductor devices.
2. Processing at power-on
   The state of the product is undefined at the time when power is supplied. The states of internal circuits in the LSI are indeterminate and the states of register settings and pins are undefined at the time when power is supplied. In a finished product where the reset signal is applied to the external reset pin, the states of pins are not guaranteed from the time when power is supplied until the reset process is completed. In a similar way, the states of pins in a product that is reset by an on-chip power-on reset function are not guaranteed from the time when power is supplied until the power reaches the level at which resetting is specified.
3. Input of signal during power-off state
   Do not input signals or an I/O pull-up power supply while the device is powered off. The current injection that results from input of such a signal or I/O pull-up power supply may cause malfunction and the abnormal current that passes in the device at this time may cause degradation of internal elements. Follow the guideline for input signal during power-off state as described in your product documentation.
4. Handling of unused pins
   Handle unused pins in accordance with the directions given under handling of unused pins in the manual. The input pins of CMOS products are generally in the high-impedance state. In operation with an unused pin in the open-circuit state, extra electromagnetic noise is induced in the vicinity of the LSI, an associated shoot-through current flows internally, and malfunctions occur due to the false recognition of the pin state as an input signal become possible.
5. Clock signals
   After applying a reset, only release the reset line after the operating clock signal becomes stable. When switching the clock signal during program execution, wait until the target clock signal is stabilized. When the clock signal is generated with an external resonator or from an external oscillator during a reset, ensure that the reset line is only released after full stabilization of the clock signal. Additionally, when switching to a clock signal produced with an external resonator or by an external oscillator while program execution is in progress, wait until the target clock signal is stable.
6. Voltage application waveform at input pin
   Waveform distortion due to input noise or a reflected wave may cause malfunction. If the input of the CMOS device stays in the area between V_{IL} (Max.) and V_{IH} (Min.) due to noise, for example, the device may malfunction. Take care to prevent chattering noise from entering the device when the input level is fixed, and also in the transition period when the input level passes through the area between V_{IL} (Max.) and V_{IH} (Min.).
7. Prohibition of access to reserved addresses
   Access to reserved addresses is prohibited. The reserved addresses are provided for possible future expansion of functions. Do not access these addresses as the correct operation of the LSI is not guaranteed.
8. Differences between products
   Before changing from one product to another, for example to a product with a different part number, confirm that the change will not lead to problems. The characteristics of a microprocessing unit or microcontroller unit products in the same group but having a different part number might differ in terms of internal memory capacity, layout pattern, and other factors, which can affect the ranges of electrical characteristics, such as characteristic values, operating margins, immunity to noise, and amount of radiated noise. When changing to a product with a different part number, implement a system-evaluation test for the given product.

How to Use This Manual

1. Purpose and Target Readers

This manual is designed to provide the user with an understanding of the hardware functions and electrical characteristics of the MCU. It is intended for users designing application systems incorporating the MCU. A basic knowledge of electric circuits, logical circuits, and MCUs is necessary in order to use this manual.
The manual comprises an overview of the product, descriptions of the CPU, system control functions, peripheral functions, electrical characteristics, and usage notes.

Particular attention should be paid to the precautionary notes when using the manual. These notes can be found within the body of the text, at the end of each section, and in the Usage Notes section.

The revision history summarizes the locations of revisions and additions. It does not list all revisions. Refer to the text of the manual for details.

The following documents apply to the RX23E-A Group. Make sure to refer to the latest versions of these documents. The latest versions of the listed documents are available from the Renesas Electronics website.

Document Type	Description	Document Title	Document No.
Datasheet	Hardware overview and electrical characteristics	RX23E-A Group Datasheet	R01DS0330EJ
User's Manual: Hardware	Hardware specifications (pin assignments, memory maps, peripheral specifications, electrical characteristics, and timing charts) and operation description Note: Refer to the application notes for details on using peripheral functions.	RX23E-A Group User's Manual: Hardware	This User's manual
User's Manual: Software	Description of CPU instruction set	RX Family RXv2 Instruction Set Architecture User's Manual: Software	R01US0071EJ
Application Note	Notes on Printed Circuit Board Patterns	RX Family Hardware Design Guide	R01AN1411EJ
	Examples of register initial setting	RX23E-A Group Initial Setting Examples	—
	Points to note on board design to obtain higher performance from the AFE and DSAD	RX23E-A Group Effective use of AFE·DSAD	R01AN4799EJ
	Information on using peripheral functions and application examples Sample programs	Available from Renesas Electronics website.	
Renesas Technical Update	Product specifications, updates on documents, etc.		

2. Notation of Numbers and Symbols

Each register description includes a bit chart, illustrating the arrangement of bits, and a table of bits, describing the meanings of the bit settings. The standard format and notation for bit charts and tables are described below.

X.X.X ... Register

Address(es): xxxx xxxxh

	b7	b6	b5	b4	b3	b2	b1	b0
	—	...[1:0]		...4	—	—	—	...0
Value after reset:	x	0	0	0	0	0	0	0

x: Undefined

Bit	Symbol	Bit Name	Description	R/W
b0	...0	.....	0: ..... 1: Setting prohibited (3)	R/W (1)
b3 to b1	—	Reserved (2)	These bits are read as 0. The write value should be 0.	R/W
b4	...4	.....	0: 1:	R
b6, b5	...[1:0]	.....	0 0: ..... 0 1: ..... Settings other than above are prohibited. (3)	R/(W)*1
b7	—	Reserved	The read value is undefined. Writing to this bit has no effect.	R

(1) R/W: The bit or field is readable and writable.
R/(W): The bit or field is readable and writable. However, writing to this bit or field has some limitations. For details on the limitations, see the description or notes of respective registers.
R: The bit or field is readable. Writing to this bit or field has no effect.

(2) Reserved.
Use the specified value when writing to this bit or field; otherwise, the correct operation is not guaranteed.

(3) Setting prohibited. The correct operation is not guaranteed if such a setting is performed.

3. List of Abbreviations and Acronyms

Abbreviation	Full Form
ACIA	Asynchronous Communications Interface Adapter
bps	bits per second
CRC	Cyclic Redundancy Check
DMA	Direct Memory Access
DMAC	Direct Memory Access Controller
GSM	Global System for Mobile Communications
Hi-Z	High Impedance
IEBus	Inter Equipment Bus
I/O	Input / Output
IrDA	Infrared Data Association
LSB	Least Significant Bit
MSB	Most Significant Bit
NC	Non-Connect
PLL	Phase Locked Loop
PWM	Pulse Width Modulation
SFR	Special Function Registers
SIM	Subscriber Identity Module
UART	Universal Asynchronous Receiver / Transmitter
VCO	Voltage Controlled Oscillator

Caution: This product uses SuperFlash® technology licensed from Silicon Storage Technology, Inc.

Contents

Features 41

1. Overview 42

1.1 Outline of Specifications 42

1.2 List of Products 47

1.3 Block Diagram 49

1.4 Pin Functions 51

1.5 Pin Assignments 54

1.5.1 48-Pin LFQFP 54

1.5.2 40-Pin HWQFN 55

1.6 List of Pins and Pin Functions 56

1.6.1 48-Pin LFQFP 56

1.6.2 40-Pin HWQFN 58

2. CPU 59

2.1 Features 59

2.2 Register Set of the CPU 60

2.2.1 General-Purpose Registers (R0 to R15) 61

2.2.2 Control Registers 61

2.2.2.1 Interrupt Stack Pointer (ISP)/User Stack Pointer (USP) 62

2.2.2.2 Exception Table Register (EXTB) 62

2.2.2.3 Interrupt Table Register (INTB) 62

2.2.2.4 Program Counter (PC) 62

2.2.2.5 Processor Status Word (PSW) 63

2.2.2.6 Backup PC (BPC) 64

2.2.2.7 Backup PSW (BPSW) 65

2.2.2.8 Fast Interrupt Vector Register (FINTV) 65

2.2.2.9 Floating-Point Status Word (FPSW) 66

2.2.3 Accumulator 68

2.3 Processor Mode 69

2.3.1 Supervisor Mode 69

2.3.2 User Mode 69

2.3.3 Privileged Instruction 69

2.3.4 Switching Between Processor Modes 69

2.4 Data Types 70

2.4.1 Integer 70

2.4.2 Floating-Points 71

2.4.3 Bitwise Operations 71

2.4.4 Strings 72

2.5 Endian 73

2.5.1 Switching the Endian 73

2.5.2 Access to I/O Registers 76

2.5.3 Notes on Access to I/O Registers 76

2.5.4 Data Arrangement 77
2.5.4.1 Data Arrangement in Registers 77
2.5.4.2 Data Arrangement in Memory 77
2.5.5 Notes on the Allocation of Instruction Codes 77
2.6 Vector Table 78
2.6.1 Exception Vector Table 78
2.6.2 Interrupt Vector Table 79
2.7 Operation of Instructions 80
2.7.1 Restrictions on RMPA and String-Manipulation Instructions 80
2.7.1.1 Transfer Size and Data Prefetching 80
2.7.1.2 Access to I/O Registers 80
2.8 Number of Cycles 81
2.8.1 Instruction and Number of Cycle 81
2.8.2 Numbers of Cycles for Response to Interrupts 85
3. Operating Modes 86
3.1 Operating Mode Types and Selection 86
3.2 Register Descriptions 87
3.2.1 Mode Monitor Register (MDMONR) 87
3.2.2 System Control Register 1 (SYSCR1) 88
3.3 Details of Operating Modes 89
3.3.1 Single-Chip Mode 89
3.3.2 Boot Mode (SCI Interface) 89
3.3.3 Boot Mode (FINE Interface) 89
3.4 Transitions of Operating Modes 90
3.4.1 Operating Mode Transitions Determined by the Mode-Setting Pins 90
4. Address Space 91
4.1 Address Space 91
5. I/O Registers 93
5.1 I/O Register Addresses (Address Order) 95
6. Resets 118
6.1 Overview 118
6.2 Register Descriptions 120
6.2.1 Reset Status Register 0 (RSTSR0) 120
6.2.2 Reset Status Register 1 (RSTSR1) 121
6.2.3 Reset Status Register 2 (RSTSR2) 122
6.2.4 Software Reset Register (SWRR) 123
6.3 Operation 124
6.3.1 RES# Pin Reset 124
6.3.2 Power-On Reset and Voltage Monitoring 0 Reset 124
6.3.3 Voltage Monitoring 1 Reset and Voltage Monitoring 2 Reset 126
6.3.4 Independent Watchdog Timer Reset 127

6.3.5 Software Reset 127
6.3.6 Determination of Cold/Warm Start 128
6.3.7 Determination of Reset Generation Source 129
7. Option-Setting Memory (OFSM) 130
7.1 Overview 130
7.2 Register Descriptions 131
7.2.1 Option Function Select Register 0 (OFS0) 131
7.2.2 Option Function Select Register 1 (OFS1) 133
7.2.3 Endian Select Register (MDE) 134
7.3 Usage Note 135
7.3.1 Setting Example of Option-Setting Memory 135
8. Voltage Detection Circuit (LVDAb) 136
8.1 Overview 136
8.2 Register Descriptions 139
8.2.1 Voltage Monitoring 1 Circuit Control Register 1 (LVD1CR1) 139
8.2.2 Voltage Monitoring 1 Circuit Status Register (LVD1SR) 140
8.2.3 Voltage Monitoring 2 Circuit Control Register 1 (LVD2CR1) 141
8.2.4 Voltage Monitoring 2 Circuit Status Register (LVD2SR) 142
8.2.5 Voltage Monitoring Circuit Control Register (LVCMPCR) 143
8.2.6 Voltage Detection Level Select Register (LVDLVLR) 144
8.2.7 Voltage Monitoring 1 Circuit Control Register 0 (LVD1CR0) 145
8.2.8 Voltage Monitoring 2 Circuit Control Register 0 (LVD2CR0) 146
8.3 VCC Input Voltage Monitor 147
8.3.1 Monitoring Vdet0 147
8.3.2 Monitoring Vdet1 147
8.3.3 Monitoring Vdet2 147
8.4 Reset from Voltage Monitor 0 148
8.5 Interrupt and Reset from Voltage Monitoring 1 149
8.6 Interrupt and Reset from Voltage Monitoring 2 151
8.7 Event Link Output 153
8.7.1 Interrupt Handling and Event Linking 153
9. Clock Generation Circuit 154
9.1 Overview 154
9.2 Register Descriptions 157
9.2.1 System Clock Control Register (SCKCR) 157
9.2.2 System Clock Control Register 3 (SCKCR3) 159
9.2.3 PLL Control Register (PLLCR) 160
9.2.4 PLL Control Register 2 (PLLCR2) 161
9.2.5 Main Clock Oscillator Control Register (MOSCCR) 162
9.2.6 Low-Speed On-Chip Oscillator Control Register (LOCOCR) 163
9.2.7 IWDT-Dedicated On-Chip Oscillator Control Register (ILOCOCR) 164

9.2.8 High-Speed On-Chip Oscillator Control Register (HOCOCR) 165
9.2.9 Oscillation Stabilization Flag Register (OSCOVFSR) 166
9.2.10 Oscillation Stop Detection Control Register (OSTDCR) 168
9.2.11 Oscillation Stop Detection Status Register (OSTDSR) 169
9.2.12 Main Clock Oscillator Wait Control Register (MOSCWTCR) 170
9.2.13 CLKOUT Output Control Register (CKOCR) 171
9.2.14 Main Clock Oscillator Forced Oscillation Control Register (MOFCR) 172
9.2.15 Low-Speed On-Chip Oscillator Trimming Register (LOCOTRR) 173
9.2.16 IWDT-Dedicated On-Chip Oscillator Trimming Register (ILOCOTRR) 173
9.2.17 High-Speed On-Chip Oscillator Trimming Register 0 (HOCOTRR0) 174
9.3 Main Clock Oscillator 175
9.3.1 Connecting a Crystal 175
9.3.2 External Clock Input 176
9.3.3 Handling of Pins When the Main Clock is Not Used 176
9.3.4 Notes on the External Clock Input 176
9.4 Oscillation Stop Detection Function 177
9.4.1 Oscillation Stop Detection and Operation after Detection 177
9.4.2 Oscillation Stop Detection Interrupts 178
9.5 PLL Circuit 179
9.6 Internal Clock 179
9.6.1 System Clock 179
9.6.2 Peripheral Module Clock 179
9.6.3 FlashIF Clock 179
9.6.4 CAN Clock 179
9.6.5 CAC Clock 179
9.6.6 IWDT-Dedicated Clock 180
9.6.7 Low-Power Timer Clock 180
9.7 Usage Notes 181
9.7.1 Notes on Clock Generation Circuit 181
9.7.2 Note on Rewriting the SCKCR3 Register 181
9.7.3 Notes on Resonator 181
9.7.4 Notes on Board Design 182
9.7.5 Notes on Resonator Connection Pins 182
10. Clock Frequency Accuracy Measurement Circuit (CAC) 183
10.1 Overview 183
10.2 Register Descriptions 185
10.2.1 CAC Control Register 0 (CACR0) 185
10.2.2 CAC Control Register 1 (CACR1) 186
10.2.3 CAC Control Register 2 (CACR2) 187
10.2.4 CAC Interrupt Request Enable Register (CAICR) 188
10.2.5 CAC Status Register (CASTR) 189

10.2.6 CAC Upper-Limit Value Setting Register (CAULVR) 190
10.2.7 CAC Lower-Limit Value Setting Register (CALLVR) 190
10.2.8 CAC Counter Buffer Register (CACNTBR) 190
10.3 Operation 191
10.3.1 Measuring Clock Frequency 191
10.3.2 Digital Filtering of Signals on the CACREF Pin 192
10.4 Interrupt Requests 192
10.5 Usage Notes 193
10.5.1 Module Stop Function Setting 193
11. Low Power Consumption 194
11.1 Overview 194
11.2 Register Descriptions 198
11.2.1 Standby Control Register (SBYCR) 198
11.2.2 Module Stop Control Register A (MSTPCRA) 199
11.2.3 Module Stop Control Register B (MSTPCRB) 200
11.2.4 Module Stop Control Register C (MSTPCRC) 201
11.2.5 Operating Power Control Register (OPCCR) 202
11.3 Reducing Power Consumption by Switching Clock Signals 205
11.4 Module Stop Function 205
11.5 Function for Lower Operating Power Consumption 205
11.5.1 Setting Operating Power Control Mode 205
11.6 Low Power Consumption Modes 207
11.6.1 Sleep Mode 207
11.6.1.1 Entry to Sleep Mode 207
11.6.1.2 Exit from Sleep Mode 208
11.6.2 Deep Sleep Mode 209
11.6.2.1 Entry to Deep Sleep Mode 209
11.6.2.2 Exit from Deep Sleep Mode 210
11.6.3 Software Standby Mode 211
11.6.3.1 Entry to Software Standby Mode 211
11.6.3.2 Exit from Software Standby Mode 212
11.6.3.3 Example of Software Standby Mode Application 213
11.7 Usage Notes 214
11.7.1 I/O Port States 214
11.7.2 Module Stop State of DMAC and DTC 214
11.7.3 On-Chip Peripheral Module Interrupts 214
11.7.4 Write Access to MSTPCRA, MSTPCRB, and MSTPCRC 214
11.7.5 Timing of WAIT Instructions 214
11.7.6 Rewrite the Register by DMAC and DTC in Sleep Mode 214
12. Register Write Protection Function 215
12.1 Register Descriptions 216

12.1.1 Protect Register (PRCR) 216
13. Exception Handling 217
13.1 Exception Events 217
13.1.1 Undefined Instruction Exception 218
13.1.2 Privileged Instruction Exception 218
13.1.3 Access Exceptions 218
13.1.4 Floating-Point Exception 218
13.1.5 Reset 218
13.1.6 Non-Maskable Interrupt 218
13.1.7 Interrupt 218
13.1.8 Unconditional Trap 218
13.2 Exception Handling Procedure 219
13.3 Acceptance of Exception Events 221
13.3.1 Acceptance Timing and Saved PC Value 221
13.3.2 Vector and Site for Saving the Values in the PC and PSW 222
13.4 Hardware Processing for Accepting and Returning from Exceptions 223
13.5 Hardware Pre-Processing 224
13.5.1 Undefined Instruction Exception 224
13.5.2 Privileged Instruction Exception 224
13.5.3 Access Exceptions 224
13.5.4 Floating-Point Exception 224
13.5.5 Reset 224
13.5.6 Non-Maskable Interrupt 225
13.5.7 Interrupt 225
13.5.8 Unconditional Trap 225
13.6 Return from Exception Handling Routine 226
13.7 Priority of Exception Events 226
14. Interrupt Controller (ICUb) 227
14.1 Overview 227
14.2 Register Descriptions 229
14.2.1 Interrupt Request Register n (IRn) (n = interrupt vector number) 229
14.2.2 Interrupt Request Enable Register m (IERm) (m = 02h to 1Fh) 230
14.2.3 Interrupt Source Priority Register n (IPRn) (n = interrupt vector number) 231
14.2.4 Fast Interrupt Set Register (FIR) 232
14.2.5 Software Interrupt Generation Register (SWINTR) 233
14.2.6 DTC Transfer Request Enable Register n (DTCERn) (n = interrupt vector number) 234
14.2.7 DMAC Trigger Select Register m (DMRSRm) (m = DMAC channel number) 235
14.2.8 IRQ Control Register i (IRQCRi) (i = 0 to 7) 236
14.2.9 IRQ Pin Digital Filter Enable Register 0 (IRQFLTE0) 237
14.2.10 IRQ Pin Digital Filter Setting Register 0 (IRQFLTC0) 238

14.2.11 Non-Maskable Interrupt Status Register (NMISR) 239
14.2.12 Non-Maskable Interrupt Enable Register (NMIER) 241
14.2.13 Non-Maskable Interrupt Status Clear Register (NMICLR) 242
14.2.14 NMI Pin Interrupt Control Register (NMICR) 243
14.2.15 NMI Pin Digital Filter Enable Register (NMIFLTE) 243
14.2.16 NMI Pin Digital Filter Setting Register (NMIFLTC) 244
14.3 Vector Table 245
14.3.1 Interrupt Vector Table 245
14.3.2 Fast Interrupt Vector Table 251
14.3.3 Non-maskable Interrupt Vector Area 251
14.4 Interrupt Operation 252
14.4.1 Detecting Interrupts 252
14.4.1.1 Operation of Status Flags for Edge-Detected Interrupts 252
14.4.1.2 Operation of Status Flags for Level-Detected Interrupts 254
14.4.2 Enabling and Disabling Interrupt Sources 255
14.4.3 Selecting Interrupt Request Destinations 256
14.4.4 Determining Priority 258
14.4.5 Multiple Interrupts 258
14.4.6 Fast Interrupt 258
14.4.7 Digital Filter 259
14.4.8 External Pin Interrupts 259
14.5 Non-maskable Interrupt Operation 260
14.6 Return from Low Power Consumption States 261
14.6.1 Return from Sleep Mode or Deep Sleep Mode 261
14.6.2 Return from Software Standby Mode 261
14.7 Usage Note 262
14.7.1 Note on WAIT Instruction Used with Non-Maskable Interrupt 262
15. Buses 263
15.1 Overview 263
15.2 Description of Buses 265
15.2.1 CPU Buses 265
15.2.2 Memory Buses 265
15.2.3 Internal Main Buses 265
15.2.4 Internal Peripheral Buses 266
15.2.5 Write Buffer Function (Internal Peripheral Bus) 267
15.2.6 Parallel Operation 268
15.2.7 Restrictions 269
15.3 Register Descriptions 270
15.3.1 Bus Error Status Clear Register (BERCLR) 270
15.3.2 Bus Error Monitoring Enable Register (BEREN) 270
15.3.3 Bus Error Status Register 1 (BERSR1) 271

15.3.4 Bus Error Status Register 2 (BERSR2) 271
15.3.5 Bus Priority Control Register (BUSPRI) 272
15.4 Bus Error Monitoring Section 274
15.4.1 Types of Bus Error 274
15.4.1.1 Illegal Address Access 274
15.4.1.2 Timeout 274
15.4.2 Operations When a Bus Error Occurs 275
15.4.3 Conditions Leading to Bus Errors 275
15.5 Interrupt 276
15.5.1 Interrupt Source 276
16. Memory-Protection Unit (MPU) 277
16.1 Overview 277
16.1.1 Types of Access Control 279
16.1.2 Regions for Access Control 279
16.1.3 Background Region 279
16.1.4 Overlap between Regions 279
16.1.5 Instructions and Data that Span Regions 279
16.2 Register Descriptions 280
16.2.1 Region-n Start Page Number Register (RSPAGEn) (n = 0 to 7) 280
16.2.2 Region-n End Page Number Register (REPAGEn) (n = 0 to 7) 281
16.2.3 Memory-Protection Enable Register (MPEN) 282
16.2.4 Background Access Control Register (MPBAC) 283
16.2.5 Memory-Protection Error Status-Clearing Register (MPECLR) 284
16.2.6 Memory-Protection Error Status Register (MPESTS) 285
16.2.7 Data Memory-Protection Error Address Register (MPDEA) 286
16.2.8 Region Search Address Register (MPSA) 286
16.2.9 Region Search Operation Register (MPOPS) 287
16.2.10 Region Invalidation Operation Register (MPOPI) 287
16.2.11 Instruction-Hit Region Register (MHITI) 288
16.2.12 Data-Hit Region Register (MHITD) 290
16.3 Functions 292
16.3.1 Memory Protection 292
16.3.2 Region Search 292
16.3.3 Protection of Registers Related to the Memory-Protection Unit 292
16.3.4 Flow for Determination of Access by the Memory-Protection Function 293
16.4 Procedures for Using Memory Protection 295
16.4.1 Setting Access-Control Information 295
16.4.2 Enabling Memory Protection 295
16.4.3 Transition to User Mode 295
16.4.4 Processing in Response to Memory-Protection Errors 295

17. DMA Controller (DMACA) 297
17.1 Overview 297
17.2 Register Descriptions 299
17.2.1 DMA Source Address Register (DMSAR) 299
17.2.2 DMA Destination Address Register (DMDAR) 299
17.2.3 DMA Transfer Count Register (DMCRA) 300
17.2.4 DMA Block Transfer Count Register (DMCRB) 302
17.2.5 DMA Transfer Mode Register (DMTMD) 303
17.2.6 DMA Interrupt Setting Register (DMINT) 304
17.2.7 DMA Address Mode Register (DMAMD) 306
17.2.8 DMA Offset Register (DMOFR) 309
17.2.9 DMA Transfer Enable Register (DMCNT) 310
17.2.10 DMA Software Start Register (DMREQ) 311
17.2.11 DMA Status Register (DMSTS) 312
17.2.12 DMA Activation Source Flag Control Register (DMCSL) 314
17.2.13 DMA Module Activation Register (DMAST) 315
17.3 Operation 316
17.3.1 Transfer Mode 316
17.3.2 Extended Repeat Area Function 320
17.3.3 Address Update Function Using Offset 322
17.3.4 Activation Sources 326
17.3.5 Operation Timing 327
17.3.6 DMAC Execution Cycles 328
17.3.7 Activating the DMAC 329
17.3.8 Starting DMA Transfer 330
17.3.9 Registers during DMA Transfer 330
17.3.10 Channel Priority 331
17.4 Ending DMA Transfer 332
17.4.1 Transfer End by Completion of Specified Total Number of Transfer Operations 332
17.4.2 Transfer End by Repeat Size End Interrupt 332
17.4.3 Transfer End by Interrupt on Extended Repeat Area Overflow 333
17.5 Interrupts 334
17.6 Event Link Function 335
17.7 Low Power Consumption Function 336
17.8 Usage Notes 337
17.8.1 DMA Transfer to Peripheral Modules 337
17.8.2 Access to the Registers during DMA Transfer 337
17.8.3 DMA Transfer to Reserved Areas 337
17.8.4 Interrupt Request by the DMA Activation Source Flag Control Register (DMCSL) at the End of each Transfer 337
17.8.5 Setting of DMAC Activation Source Select Register of the Interrupt Controller (ICU.DMRSRm) 337

17.8.6 Suspending or Restarting DMA Activation 337
18. Data Transfer Controller (DTCa) 338
18.1 Overview 338
18.2 Register Descriptions 340
18.2.1 DTC Mode Register A (MRA) 340
18.2.2 DTC Mode Register B (MRB) 341
18.2.3 DTC Transfer Source Register (SAR) 342
18.2.4 DTC Transfer Destination Register (DAR) 342
18.2.5 DTC Transfer Count Register A (CRA) 343
18.2.6 DTC Transfer Count Register B (CRB) 344
18.2.7 DTC Control Register (DTCCR) 344
18.2.8 DTC Vector Base Register (DTCVBR) 345
18.2.9 DTC Address Mode Register (DTCADMOD) 345
18.2.10 DTC Module Start Register (DTCST) 346
18.2.11 DTC Status Register (DTCSTS) 347
18.3 Request Sources 348
18.3.1 Allocating Transfer Information and DTC Vector Table 348
18.4 Operation 350
18.4.1 Transfer Information Read Skip Function 352
18.4.2 Transfer Information Write-Back Skip Function 353
18.4.3 Normal Transfer Mode 354
18.4.4 Repeat Transfer Mode 355
18.4.5 Block Transfer Mode 356
18.4.6 Chain Transfer 357
18.4.7 Operation Timing 358
18.4.8 Execution Cycles of the DTC 361
18.4.9 DTC Bus Mastership Release Timing 361
18.5 DTC Setting Procedure 362
18.6 Examples of DTC Usage 363
18.6.1 Normal Transfer 363
18.6.2 Chain Transfer When the Counter is 0 364
18.7 Interrupt Source 365
18.8 Event Link 365
18.9 Low Power Consumption Function 366
18.10 Usage Notes 367
18.10.1 Start Address of Transfer Information 367
18.10.2 Allocating Transfer Information 367
18.10.3 Setting the DTC Transfer Request Enable Register in the Interrupt Controller (ICU.DTCERn) 368
19. Event Link Controller (ELC) 369
19.1 Overview 369

19.2 Register Descriptions 370
19.2.1 Event Link Control Register (ELCR) 370
19.2.2 Event Link Setting Register n (ELSRn)
(n = 1 to 4, 7, 8, 10, 12, 15, 18, 19, 24, 25, 28, 29, 46, 47) 371
19.2.3 Event Link Option Setting Register A (ELOPA) 374
19.2.4 Event Link Option Setting Register B (ELOPB) 374
19.2.5 Event Link Option Setting Register C (ELOPC) 375
19.2.6 Event Link Option Setting Register D (ELOPD) 375
19.2.7 Event Link Port Setting Register m (PELm) (m = 0, 1) 376
19.2.8 Event Link Software Event Generation Register (ELSEGR) 377
19.3 Operation 378
19.3.1 Relation between Interrupt Handling and Event Linking 378
19.3.2 Event Linkage 379
19.3.3 Operation of Peripheral Timer Modules When Event Signal is Input 380
19.3.4 Operation of A/D Converter When Event Signal is Input 380
19.3.5 I/O Port Operation When Event Signal is Input and Event Generation 380
19.3.6 Example of Procedure for Linking Events 382
19.4 Usage Notes 383
19.4.1 Setting ELSRn Register 383
19.4.2 Linking DMA/DTC Transfer End Signal as Event 383
19.4.3 Clock Settings 383
19.4.4 Module Stop Function Setting 383
20. I/O Ports 384
20.1 Overview 384
20.2 I/O Port Configuration 385
20.3 Register Descriptions 387
20.3.1 Port Direction Register (PDR) 387
20.3.2 Port Output Data Register (PODR) 388
20.3.3 Port Input Data Register (PIDR) 389
20.3.4 Port Mode Register (PMR) 390
20.3.5 Open Drain Control Register 0 (ODR0) 391
20.3.6 Open Drain Control Register 1 (ODR1) 392
20.3.7 Pull-Up Control Register (PCR) 393
20.3.8 Drive Capacity Control Register (DSCR) 394
20.4 Initialization of the Port Direction Register (PDR) 395
20.5 Handling of Unused Pins 396
21. Multi-Function Pin Controller (MPC) 397
21.1 Overview 397
21.2 Register Descriptions 401
21.2.1 Write-Protect Register (PWPR) 401
21.2.2 P1n Pin Function Control Registers (P1nPFS) (n = 4 to 7) 402

21.2.3 P2n Pin Function Control Register (P2nPFS) (n = 6, 7) 403
21.2.4 P3n Pin Function Control Registers (P3nPFS) (n = 0, 1) 404
21.2.5 PBn Pin Function Control Registers (PBnPFS) (n = 0, 1) 405
21.2.6 PCn Pin Function Control Registers (PCnPFS) (n = 4 to 7) 406
21.2.7 PHn Pin Function Control Registers (PHnPFS) (n = 0 to 3) 407
21.3 Usage Notes 408
21.3.1 Procedure for Specifying Input/Output Pin Function 408
21.3.2 Notes on MPC Register Setting 408
22. Multi-Function Timer Pulse Unit 2 (MTU2a) 409
22.1 Overview 409
22.2 Register Descriptions 415
22.2.1 Timer Control Register (TCR) 415
22.2.2 Timer Mode Register (TMDR) 418
22.2.3 Timer I/O Control Register (TIOR) 420
22.2.4 Timer Compare Match Clear Register (TCNTCMPCLR) 431
22.2.5 Timer Interrupt Enable Register (TIER) 432
22.2.6 Timer Status Register (TSR) 435
22.2.7 Timer Buffer Operation Transfer Mode Register (TBTM) 436
22.2.8 Timer Input Capture Control Register (TICCR) 437
22.2.9 Timer A/D Conversion Start Request Control Register (TADCR) 438
22.2.10 Timer A/D Conversion Start Request Cycle Set Register m (TADCORm) (m = A, B) 439
22.2.11 Timer A/D Conversion Start Request Cycle Set Buffer Register m (TADCOBRm) (m = A, B) 440
22.2.12 Timer Counter (TCNT) 440
22.2.13 Timer General Register m (TGRm) (m = A, B, C, D, E, F, U, V, W) 441
22.2.14 Timer Start Registers (TSTR) 442
22.2.15 Timer Synchronous Register (TSYR) 443
22.2.16 Timer Read/Write Enable Register (TRWER) 444
22.2.17 Timer Output Master Enable Register (TOER) 445
22.2.18 Timer Output Control Register 1 (TOCR1) 446
22.2.19 Timer Output Control Register 2 (TOCR2) 448
22.2.20 Timer Output Level Buffer Register (TOLBR) 450
22.2.21 Timer Gate Control Register (TGCR) 451
22.2.22 Timer Subcounter (TCNTS) 452
22.2.23 Timer Dead Time Data Register (TDDR) 452
22.2.24 Timer Cycle Data Register (TCDR) 453
22.2.25 Timer Cycle Buffer Register (TCBR) 453
22.2.26 Timer Interrupt Skipping Set Register (TITCR) 454
22.2.27 Timer Interrupt Skipping Counter (TITCNT) 455
22.2.28 Timer Buffer Transfer Set Register (TBTER) 456
22.2.29 Timer Dead Time Enable Register (TDER) 457

22.2.30 Timer Waveform Control Register (TWCR) 458
22.2.31 Noise Filter Control Registers (NFCR) 459
22.2.32 Bus Master Interface 461
22.3 Operation 462
22.3.1 Basic Functions 462
22.3.2 Synchronous Operation 468
22.3.3 Buffer Operation 470
22.3.4 Cascaded Operation 474
22.3.5 PWM Modes 479
22.3.6 Phase Counting Mode 483
22.3.7 Reset-Synchronized PWM Mode 489
22.3.8 Complementary PWM Mode 492
22.3.9 A/D Conversion Start Request Delaying Function 523
22.3.10 External Pulse Width Measurement 527
22.3.11 Dead Time Compensation 528
22.3.12 Noise Filter 531
22.4 Interrupt Sources 532
22.4.1 Interrupt Sources and Priorities 532
22.4.2 DTC/DMAC Trigger Sources 533
22.4.3 A/D Converter Trigger Source 533
22.5 Operation Timing 535
22.5.1 Input/Output Timing 535
22.5.2 Interrupt Signal Timing 541
22.6 Usage Notes 544
22.6.1 Module Clock Stop Mode Setting 544
22.6.2 Count Clock Restrictions 544
22.6.3 Notes on Cycle Setting 544
22.6.4 Contention between TCNT Write and Clear Operations 545
22.6.5 Contention between TCNT Write and Increment Operations 545
22.6.6 Contention between TGR Write Operation and Compare Match 546
22.6.7 Contention between Buffer Register Write Operation and Compare Match 546
22.6.8 Contention between Buffer Register Write and TCNT Clear Operations 547
22.6.9 Contention between TGR Read Operation and Input Capture 547
22.6.10 Contention between TGR Write Operation and Input Capture 548
22.6.11 Contention between Buffer Register Write Operation and Input Capture 549
22.6.12 Contention between MTU2.TCNT Write Operation and Overflow/Underflow in Cascaded Operation 550
22.6.13 Counter Value When Count Operation is Stopped in Complementary PWM Mode 551
22.6.14 Buffer Operation Setting in Complementary PWM Mode 551
22.6.15 Buffer Operation and Compare Match Flags in Reset-Synchronized PWM Mode 552
22.6.16 Overflow Flags in Reset-Synchronized PWM Mode 553

22.6.17 Contention between Overflow/Underflow and Counter Clearing 554
22.6.18 Contention between TCNT Write Operation and Overflow/Underflow 554
22.6.19 Notes on Transition from Normal Mode or PWM Mode 1 to Reset-Synchronized PWM Mode 555
22.6.20 Output Level in Complementary PWM Mode or Reset-Synchronized PWM Mode 555
22.6.21 Interrupts during Periods in the Module Stop State 555
22.6.22 Simultaneous Input Capture in MTU1.TCNT and MTU2.TCNT in Cascade Connection 555
22.6.23 Notes When Complementary PWM Mode Output Protection Functions are Not Used 556
22.6.24 Point for Caution Regarding MTU5.TCNT and MTU5.TGR Registers 556
22.6.25 Points for Caution to Prevent Malfunctions in Synchronous Clearing for Complementary PWM Mode 557
22.6.26 Continuous Output of Interrupt Signal in Response to a Compare Match 559
22.6.27 Usage Notes on A/D Conversion Start Request Delaying Function in Complementary PWM Mode 559
22.7 MTU Output Pin Initialization 561
22.7.1 Operating Modes 561
22.7.2 Operation in Case of Re-Setting Due to Error during Operation 561
22.7.3 Overview of Pin Initialization Procedures and Mode Transitions in Case of Error during Operation 562
22.8 Operations Linked by the ELC 588
22.8.1 Event Signal Output to the ELC 588
22.8.2 MTU Operations in Response to Receiving Event Signals from the ELC 588
22.8.3 Notes on MTU by Event Signal Reception from the ELC 589
23. Port Output Enable 2 (POE2a) 590
23.1 Overview 590
23.2 Register Descriptions 593
23.2.1 Input Level Control/Status Register 1 (ICSR1) 593
23.2.2 Output Level Control/Status Register 1 (OCSR1) 595
23.2.3 Input Level Control/Status Register 2 (ICSR2) 596
23.2.4 Software Port Output Enable Register (SPOER) 597
23.2.5 Port Output Enable Control Register 1 (POECR1) 598
23.2.6 Port Output Enable Control Register 2 (POECR2) 599
23.2.7 Input Level Control/Status Register 3 (ICSR3) 600
23.3 Operation 601
23.3.1 Input Level Detection Operation 603
23.3.2 Output-Level Compare Operation 604
23.3.3 High-Impedance Control Using Registers 605
23.3.4 High-Impedance Control on Detection of Stopped Oscillation 605
23.3.5 High-Impedance Control in Response to Receiving an Event Signal from the ELC 605
23.3.6 Release from the High-Impedance 605
23.4 Interrupts 606
23.5 Usage Notes 606

23.5.1 Transitions to Software Standby Mode 606
23.5.2 When the POE Is Not Used 606
23.5.3 Specifying Pins Corresponding to the MTU 606
23.5.4 Notes on High-Impedance Control by Event Signal Reception from the ELC 606
24. 8-Bit Timer (TMRa) 607
24.1 Overview 607
24.2 Register Descriptions 612
24.2.1 Timer Counter (TCNT) 612
24.2.2 Time Constant Register A (TCORA) 613
24.2.3 Time Constant Register B (TCORB) 613
24.2.4 Timer Control Register (TCR) 614
24.2.5 Timer Counter Control Register (TCCR) 615
24.2.6 Timer Control/Status Register (TCSR) 617
24.2.7 Timer Counter Start Register (TCSTR) 619
24.3 Operation 620
24.3.1 Pulse Output 620
24.3.2 External Counter Reset Input 621
24.4 Operation Timing 622
24.4.1 TCNT Count Timing 622
24.4.2 Timing of Interrupt Signal Output on a Compare Match 623
24.4.3 Timing of Timer Output Signal at Compare Match 623
24.4.4 Timing of Counter Clear by Compare Match 624
24.4.5 Timing of the External Reset for TCNT 624
24.4.6 Timing of Interrupt Signal Output on an Overflow 625
24.5 Operation with Cascaded Connection 626
24.5.1 16-Bit Count Mode 626
24.5.2 Compare Match Count Mode 626
24.6 Interrupt Sources 627
24.6.1 Interrupt Sources and DTC Activation 627
24.7 Link Operation by ELC 628
24.7.1 Event Signal Output to ELC 628
24.7.2 TMR Operation when Receiving an Event Signal from ELC 628
24.7.3 Notes on Operating TMR According to an Event Signal from ELC 629
24.8 Usage Notes 630
24.8.1 Module Stop State Setting 630
24.8.2 Notes on Setting Cycle 630
24.8.3 Conflict between TCNT Write and Counter Clear 630
24.8.4 Conflict between TCNT Write and Increment 631
24.8.5 Conflict between TCORA or TCORB Write and Compare Match 631
24.8.6 Conflict between Compare Matches A and B 632
24.8.7 Switching of Internal Clocks and TCNT Operation 632

24.8.8 Clock Source Setting with Cascaded Connection 634
24.8.9 Continuous Output of Compare Match Interrupt Signal 634
25. Compare Match Timer (CMT) 635
25.1 Overview 635
25.2 Register Descriptions 636
25.2.1 Compare Match Timer Start Register 0 (CMSTR0) 636
25.2.2 Compare Match Timer Control Register (CMCR) 636
25.2.3 Compare Match Counter (CMCNT) 637
25.2.4 Compare Match Constant Register (CMCOR) 637
25.3 Operation 638
25.3.1 Periodic Count Operation 638
25.3.2 CMCNT Count Timing 638
25.4 Interrupts 639
25.4.1 Interrupt Sources 639
25.4.2 Timing of Compare Match Interrupt Generation 639
25.5 Link Operations by ELC 640
25.5.1 Event Signal Output to ELC 640
25.5.2 CMT Operation When Receiving an Event Signal from ELC 640
25.5.3 Notes on Operating CMT According to an Event Signal from ELC 640
25.6 Usage Notes 641
25.6.1 Setting the Module Stop Function 641
25.6.2 Conflict between CMCNT Counter Writing and Compare Match 641
25.6.3 Conflict between CMCNT Counter Writing and Incrementing 641
26. Low-Power Timer (LPT) 642
26.1 Overview 642
26.2 Register Descriptions 643
26.2.1 Low-Power Timer Control Register 1 (LPTCR1) 643
26.2.2 Low-Power Timer Control Register 2 (LPTCR2) 644
26.2.3 Low-Power Timer Control Register 3 (LPTCR3) 645
26.2.4 Low-Power Timer Period Setting Register (LPTPRD) 646
26.2.5 Low-Power Timer Compare Register 0 (LPCMR0) 648
26.2.6 Low-Power Timer Standby Wakeup Enable Register (LPWUCR) 649
26.3 Operation 650
26.3.1 Periodic Counting Operation 650
26.3.2 Count Timing of Low-Power Timer Counter 652
26.3.3 Clearing Timing of Low-Power Timer Counter 652
26.4 Wakeup from Software Standby Mode by an Interrupt through the Event Link Controller (ELC) 653
26.5 Usage Notes 653
26.5.1 Notes on Transition to Software Standby Mode 653

27. Independent Watchdog Timer (IWDTa) 654
27.1 Overview 654
27.2 Register Descriptions 656
27.2.1 IWDT Refresh Register (IWDTRR) 656
27.2.2 IWDT Control Register (IWDTCR) 657
27.2.3 IWDT Status Register (IWDTSR) 660
27.2.4 IWDT Reset Control Register (IWDTRCR) 661
27.2.5 IWDT Count Stop Control Register (IWDTCSTPR) 662
27.2.6 Option Function Select Register 0 (OFS0) 662
27.3 Operation 663
27.3.1 Count Operation in Each Start Mode 663
27.3.1.1 Register Start Mode 663
27.3.1.2 Auto-Start Mode 665
27.3.2 Refresh Operation 666
27.3.3 Status Flags 668
27.3.4 Reset Output 668
27.3.5 Interrupt Sources 668
27.3.6 Reading the Counter Value 669
27.3.7 Correspondence between Option Function Select Register 0 (OFS0) and IWDT Registers 670
27.4 Link Operation by ELC 670
27.5 Usage Notes 670
27.5.1 Refresh Operations 670
27.5.2 Clock Divide Ratio Setting 670
28. Serial Communications Interface (SCIg, SCIh) 671
28.1 Overview 671
28.2 Register Descriptions 679
28.2.1 Receive Shift Register (RSR) 679
28.2.2 Receive Data Register (RDR) 679
28.2.3 Receive Data Register H, L, HL (RDRH, RDRL, RDRHL) 680
28.2.4 Transmit Data Register (TDR) 681
28.2.5 Transmit Data Register H, L, HL (TDRH, TDRL, TDRHL) 682
28.2.6 Transmit Shift Register (TSR) 682
28.2.7 Serial Mode Register (SMR) 683
28.2.8 Serial Control Register (SCR) 687
28.2.9 Serial Status Register (SSR) 691
28.2.10 Smart Card Mode Register (SCMR) 696
28.2.11 Bit Rate Register (BRR) 698
28.2.12 Modulation Duty Register (MDDR) 706
28.2.13 Serial Extended Mode Register (SEMR) 707
28.2.14 Noise Filter Setting Register (SNFR) 710

28.2.15 I2C Mode Register 1 (SIMR1) 711
28.2.16 I2C Mode Register 2 (SIMR2) 712
28.2.17 I2C Mode Register 3 (SIMR3) 713
28.2.18 I2C Status Register (SISR) 715
28.2.19 SPI Mode Register (SPMR) 716
28.2.20 Extended Serial Module Enable Register (ESMER) 717
28.2.21 Control Register 0 (CR0) 718
28.2.22 Control Register 1 (CR1) 718
28.2.23 Control Register 2 (CR2) 719
28.2.24 Control Register 3 (CR3) 720
28.2.25 Port Control Register (PCR) 720
28.2.26 Interrupt Control Register (ICR) 721
28.2.27 Status Register (STR) 722
28.2.28 Status Clear Register (STCR) 723
28.2.29 Control Field 0 Data Register (CF0DR) 723
28.2.30 Control Field 0 Compare Enable Register (CF0CR) 724
28.2.31 Control Field 0 Receive Data Register (CF0RR) 724
28.2.32 Primary Control Field 1 Data Register (PCF1DR) 724
28.2.33 Secondary Control Field 1 Data Register (SCF1DR) 725
28.2.34 Control Field 1 Compare Enable Register (CF1CR) 725
28.2.35 Control Field 1 Receive Data Register (CF1RR) 725
28.2.36 Timer Control Register (TCR) 726
28.2.37 Timer Mode Register (TMR) 726
28.2.38 Timer Prescaler Register (TPRE) 727
28.2.39 Timer Count Register (TCNT) 727
28.3 Operation in Asynchronous Mode 728
28.3.1 Serial Data Transfer Format 728
28.3.2 Receive Data Sampling Timing and Reception Margin in Asynchronous Mode 730
28.3.3 Clock 731
28.3.4 Double-Speed Mode 731
28.3.5 CTS and RTS Functions 732
28.3.6 SCI Initialization (Asynchronous Mode) 733
28.3.7 Serial Data Transmission (Asynchronous Mode) 735
28.3.8 Serial Data Reception (Asynchronous Mode) 739
28.4 Multi-Processor Communications Function 743
28.4.1 Multi-Processor Serial Data Transmission 744
28.4.2 Multi-Processor Serial Data Reception 745
28.5 Operation in Clock Synchronous Mode 748
28.5.1 Clock 748
28.5.2 CTS and RTS Functions 749
28.5.3 SCI Initialization (Clock Synchronous Mode) 750

28.5.4 Serial Data Transmission (Clock Synchronous Mode) 751
28.5.5 Serial Data Reception (Clock Synchronous Mode) 755
28.5.6 Simultaneous Serial Data Transmission and Reception (Clock Synchronous Mode) 758
28.6 Operation in Smart Card Interface Mode 759
28.6.1 Sample Connection 759
28.6.2 Data Format (Except in Block Transfer Mode) 760
28.6.3 Block Transfer Mode 761
28.6.4 Receive Data Sampling Timing and Reception Margin 762
28.6.5 SCI Initialization (Smart Card Interface Mode) 763
28.6.6 Serial Data Transmission (Except in Block Transfer Mode) 765
28.6.7 Serial Data Reception (Except in Block Transfer Mode) 768
28.6.8 Clock Output Control 770
28.7 Operation in Simple I^2C Mode 771
28.7.1 Generation of Start, Restart, and Stop Conditions 772
28.7.2 Clock Synchronization 774
28.7.3 SSDA Output Delay 775
28.7.4 SCI Initialization (Simple I^2C Mode) 776
28.7.5 Operation in Master Transmission (Simple I^2C Mode) 777
28.7.6 Master Reception (Simple I^2C Mode) 779
28.7.7 Recovery from Bus Hang-up 781
28.8 Operation in Simple SPI Mode 782
28.8.1 States of Pins in Master and Slave Modes 783
28.8.2 SS Function in Master Mode 783
28.8.3 SS Function in Slave Mode 783
28.8.4 Relationship between Clock and Transmit/Receive Data 784
28.8.5 SCI Initialization (Simple SPI Mode) 785
28.8.6 Transmission and Reception of Serial Data (Simple SPI Mode) 785
28.9 Bit Rate Modulation Function 785
28.10 Extended Serial Mode Control Section: Description of Operation 786
28.10.1 Serial Transfer Protocol 786
28.10.2 Transmitting a Start Frame 787
28.10.3 Receiving a Start Frame 790
28.10.3.1 Priority Interrupt Bit 795
28.10.4 Detection of Bus Collisions 796
28.10.5 Digital Filter for Input on the RXDX12 Pin 797
28.10.6 Bit Rate Measurement 798
28.10.7 Selectable Timing for Sampling Data Received through RXDX12 799
28.10.8 Timer 800
28.11 Noise Cancellation Function 802
28.12 Interrupt Sources 803
28.12.1 Buffer Operations for TXI and RXI Interrupts 803

28.12.2 Interrupts in Asynchronous Mode, Clock Synchronous Mode, and Simple SPI Mode 803
28.12.3 Interrupts in Smart Card Interface Mode 804
28.12.4 Interrupts in Simple I2C Mode 805
28.12.5 Interrupt Requests from the Extended Serial Mode Control Section 806
28.13 Event Linking 807
28.14 Usage Notes 808
28.14.1 Setting the Module Stop Function 808
28.14.2 Break Detection and Processing 808
28.14.3 Mark State and Sending Breaks 808
28.14.4 Receive Error Flags and Transmit Operations (Clock Synchronous Mode and Simple SPI Mode) 808
28.14.5 Writing Data to the TDR Register 808
28.14.6 Restrictions on Clock Synchronous Transmission (Clock Synchronous Mode and Simple SPI Mode) 809
28.14.7 Restrictions on Using DMAC or DTC 810
28.14.8 Notes on Starting Transfer 810
28.14.9 SCI Operations during Low Power Consumption State 810
28.14.10 External Clock Input in Clock Synchronous Mode and Simple SPI Mode 813
28.14.11 Limitations on Simple SPI Mode 814
28.14.12 Limitation 1 on Usage of the Extended Serial Mode Control Section 815
28.14.13 Limitation 2 on Usage of the Extended Serial Mode Control Section 815
28.14.14 Note on Transmit Enable Bit (TE Bit) 816
28.14.15 Note on Stopping Reception When Using the RTS Function in Asynchronous Mode 816
29. I2C-bus Interface (RIICa) 817
29.1 Overview 817
29.2 Register Descriptions 820
29.2.1 I2C-bus Control Register 1 (ICCR1) 820
29.2.2 I2C-bus Control Register 2 (ICCR2) 822
29.2.3 I2C-bus Mode Register 1 (ICMR1) 826
29.2.4 I2C-bus Mode Register 2 (ICMR2) 827
29.2.5 I2C-bus Mode Register 3 (ICMR3) 829
29.2.6 I2C-bus Function Enable Register (ICFER) 831
29.2.7 I2C-bus Status Enable Register (ICSER) 833
29.2.8 I2C-bus Interrupt Enable Register (ICIER) 835
29.2.9 I2C-bus Status Register 1 (ICSR1) 837
29.2.10 I2C-bus Status Register 2 (ICSR2) 840
29.2.11 Slave Address Register Ly (SARLy) (y = 0 to 2) 843
29.2.12 Slave Address Register Uy (SARUy) (y = 0 to 2) 844
29.2.13 I2C-bus Bit Rate Low-Level Register (ICBRL) 845
29.2.14 I2C-bus Bit Rate High-Level Register (ICBRH) 846
29.2.15 I2C-bus Transmit Data Register (ICDRT) 848

29.2.16 I2C-bus Receive Data Register (ICDRR) 848
29.2.17 I2C-bus Shift Register (ICDRS) 848
29.3 Operation 849
29.3.1 Communication Data Format 849
29.3.2 Initial Settings 850
29.3.3 Master Transmit Operation 851
29.3.4 Master Receive Operation 854
29.3.5 Slave Transmit Operation 860
29.3.6 Slave Receive Operation 863
29.4 SCL Synchronization Circuit 865
29.5 SDA Output Delay Function 866
29.6 Digital Noise Filters 867
29.7 Address Match Detection 868
29.7.1 Slave-Address Match Detection 868
29.7.2 Detection of the General Call Address 870
29.7.3 Device-ID Address Detection 871
29.7.4 Host Address Detection 873
29.8 Automatic Low-Hold Function for SCL 874
29.8.1 Function to Prevent Wrong Transmission of Transmit Data 874
29.8.2 NACK Reception Transfer Suspension Function 875
29.8.3 Function to Prevent Failure to Receive Data 876
29.9 Arbitration-Lost Detection Functions 878
29.9.1 Master Arbitration-Lost Detection (MALE Bit) 878
29.9.2 NACK Transmission Arbitration-Lost Detection Function (NALE Bit) 880
29.9.3 Slave Arbitration-Lost Detection (SALE Bit) 881
29.10 Start Condition/Restart Condition/Stop Condition Generating Function 882
29.10.1 Generating a Start Condition 882
29.10.2 Generating a Restart Condition 882
29.10.3 Generating a Stop Condition 883
29.11 Bus Hanging 884
29.11.1 Timeout Function 884
29.11.2 Additional SCL Output Function 886
29.11.3 RIIC Reset and Internal Reset 887
29.12 SMBus Operation 888
29.12.1 SMBus Timeout Measurement 888
29.12.2 Packet Error Code (PEC) 889
29.12.3 SMBus Host Notification Protocol (Notify ARP Master Command) 889
29.13 Interrupt Sources 890
29.13.1 Buffer Operation for TXI and RXI Interrupts 890
29.14 Initialization of Registers and Functions When a Reset is Applied or a Condition is Detected 891
29.15 Event Link Function (Output) 892

29.15.1 Interrupt Handling and Event Linking 892
29.16 Usage Notes 893
29.16.1 Setting Module Stop Function 893
29.16.2 Notes on Starting Transfer 893
30. CAN Module (RSCAN) 894
30.1 Overview 894
30.2 Register Descriptions 897
30.2.1 Bit Configuration Register L (CFGL) 897
30.2.2 Bit Configuration Register H (CFGH) 898
30.2.3 Control Register L (CTRL) 899
30.2.4 Control Register H (CTRH) 901
30.2.5 Status Register L (STSL) 903
30.2.6 Status Register H (STSH) 904
30.2.7 Error Flag Register L (ERFLL) 905
30.2.8 Error Flag Register H (ERFLH) 907
30.2.9 Global Configuration Register L (GCFGL) 908
30.2.10 Global Configuration Register H (GCFGH) 909
30.2.11 Global Control Register L (GCTRL) 910
30.2.12 Global Control Register H (GCTRH) 911
30.2.13 Global Status Register (GSTS) 911
30.2.14 Global Error Flag Register (GERFLL) 912
30.2.15 Global Transmit Interrupt Status Register (GTINTSTS) 913
30.2.16 Timestamp Register (GTSC) 914
30.2.17 Receive Rule Number Configuration Register (GAFLCFG) 914
30.2.18 Receive Rule Entry Register jAL (GAFLIDLj) (j = 0 to 15) 915
30.2.19 Receive Rule Entry Register jAH (GAFLIDHj) (j = 0 to 15) 916
30.2.20 Receive Rule Entry Register jBL (GAFLMLj) (j = 0 to 15) 917
30.2.21 Receive Rule Entry Register jBH (GAFLMHj) (j = 0 to 15) 918
30.2.22 Receive Rule Entry Register jCL (GAFLPLj) (j = 0 to 15) 919
30.2.23 Receive Rule Entry Register jCH (GAFLPHj) (j = 0 to 15) 920
30.2.24 Receive Buffer Number Configuration Register (RMNB) 921
30.2.25 Receive Buffer Receive Complete Flag Register (RMND0) 921
30.2.26 Receive Buffer Register nAL (RMIDLn) (n = 0 to 15) 922
30.2.27 Receive Buffer Register nAH (RMIDHn) (n = 0 to 15) 923
30.2.28 Receive Buffer Register nBL (RMTSn) (n = 0 to 15) 924
30.2.29 Receive Buffer Register nBH (RMPTRn) (n = 0 to 15) 925
30.2.30 Receive Buffer Register nCL (RMDF0n) (n = 0 to 15) 926
30.2.31 Receive Buffer Register nCH (RMDF1n) (n = 0 to 15) 926
30.2.32 Receive Buffer Register nDL (RMDF2n) (n = 0 to 15) 927
30.2.33 Receive Buffer Register nDH (RMDF3n) (n = 0 to 15) 927
30.2.34 Receive FIFO Control Register m (RFCCm) (m = 0, 1) 928

30.2.35 Receive FIFO Status Register m (RFSTSm) (m = 0, 1) 929
30.2.36 Receive FIFO Pointer Control Register m (RFPCTRm) (m = 0, 1) 930
30.2.37 Receive FIFO Access Register mAL (RFIDLm) (m = 0, 1) 931
30.2.38 Receive FIFO Access Register mAH (RFIDHm) (m = 0, 1) 931
30.2.39 Receive FIFO Access Register mBL (RFTSm) (m = 0, 1) 932
30.2.40 Receive FIFO Access Register mBH (RFPTRm) (m = 0, 1) 932
30.2.41 Receive FIFO Access Register mCL (RFDF0m) (m = 0, 1) 933
30.2.42 Receive FIFO Access Register mCH (RFDF1m) (m = 0, 1) 933
30.2.43 Receive FIFO Access Register mDL (RFDF2m) (m = 0, 1) 934
30.2.44 Receive FIFO Access Register mDH (RFDF3m) (m = 0, 1) 934
30.2.45 Transmit/Receive FIFO Control Register 0L (CFCCL0) 935
30.2.46 Transmit/Receive FIFO Control Register 0H (CFCCH0) 937
30.2.47 Transmit/Receive FIFO Status Register 0 (CFSTS0) 938
30.2.48 Transmit/Receive FIFO Pointer Control Register 0 (CFPCTR0) 940
30.2.49 Transmit/Receive FIFO Access Register 0AL (CFIDL0) 941
30.2.50 Transmit/Receive FIFO Access Register 0AH (CFIDH0) 942
30.2.51 Transmit/Receive FIFO Access Register 0BL (CFTS0) 943
30.2.52 Transmit/Receive FIFO Access Register 0BH (CFPTR0) 944
30.2.53 Transmit/Receive FIFO Access Register 0CL (CFDF00) 945
30.2.54 Transmit/Receive FIFO Access Register 0CH (CFDF10) 945
30.2.55 Transmit/Receive FIFO Access Register 0DL (CFDF20) 946
30.2.56 Transmit/Receive FIFO Access Register 0DH (CFDF30) 946
30.2.57 Receive FIFO Message Lost Status Register (RFMSTS) 947
30.2.58 Transmit/Receive FIFO Message Lost Status Register (CFMSTS) 947
30.2.59 Receive FIFO Interrupt Status Register (RFISTS) 948
30.2.60 Transmit/Receive FIFO Receive Interrupt Status Register (CFISTS) 948
30.2.61 Transmit Buffer Control Register p (TMCp) (p = 0 to 3) 949
30.2.62 Transmit Buffer Status Register p (TMSTSp) (p = 0 to 3) 950
30.2.63 Transmit Buffer Transmit Request Status Register (TMTRSTS) 951
30.2.64 Transmit Buffer Transmit Complete Status Register (TMTCSTS) 952
30.2.65 Transmit Buffer Transmit Abort Status Register (TMTASTS) 953
30.2.66 Transmit Buffer Interrupt Enable Register (TMIEC) 954
30.2.67 Transmit Buffer Register pAL (TMIDLp) (p = 0 to 3) 954
30.2.68 Transmit Buffer Register pAH (TMIDHp) (p = 0 to 3) 955
30.2.69 Transmit Buffer Register pBH (TMPTRp) (p = 0 to 3) 956
30.2.70 Transmit Buffer Register pCL (TMDF0p) (p = 0 to 3) 957
30.2.71 Transmit Buffer Register pCH (TMDF1p) (p = 0 to 3) 957
30.2.72 Transmit Buffer Register pDL (TMDF2p) (p = 0 to 3) 958
30.2.73 Transmit Buffer Register pDH (TMDF3p) (p = 0 to 3) 958
30.2.74 Transmit History Buffer Control Register (THLCC0) 959
30.2.75 Transmit History Buffer Status Register (THLSTS0) 960

30.2.76 Transmit History Buffer Access Register (THLACC0) 961
30.2.77 Transmit History Buffer Pointer Control Register (THLPCTR0) 962
30.2.78 Global RAM Window Control Register (GRWCR) 963
30.2.79 Global Test Configuration Register (GTSTCFG) 964
30.2.80 Global Test Control Register (GTSTCTRL) 964
30.2.81 Global Test Protection Unlock Register (GLOCKK) 965
30.2.82 RAM Test Register r (RPGACCr) (r = 0 to 127) 965
30.3 CAN Modes 966
30.3.1 Global Modes 966
30.3.2 Channel Modes 968
30.4 Reception Function 972
30.4.1 Data Processing Using the Receive Rule Table 972
30.4.2 Timestamp 974
30.5 Transmission Functions 975
30.5.1 Transmit Priority Determination 975
30.5.2 Transmission Using Transmit Buffers 976
30.5.3 Transmission Using FIFO Buffers 976
30.5.4 Transmit History Function 979
30.6 Test Function 980
30.6.1 Standard Test Mode 980
30.6.2 Listen-Only Mode 980
30.6.3 Self-Test Mode (Loopback Mode) 981
30.6.4 RAM Test 981
30.7 Interrupt 982
30.8 RAM Window 985
30.9 Initial Settings 986
30.9.1 Clock Setting 987
30.9.2 Bit Timing Setting 987
30.9.3 Communication Speed Setting 988
30.9.4 Receive Rule Setting 989
30.9.5 Buffer Setting 990
30.10 Reception Procedure 991
30.10.1 Receive Buffer Reading Procedure 991
30.10.2 FIFO Buffer Reading Procedure 993
30.11 Transmission Procedure 995
30.11.1 Procedure for Transmission from Transmit Buffers 995
30.11.2 Procedure for Transmission from Transmit/Receive FIFO Buffers 998
30.11.3 Transmit History Buffer Reading Procedure 1001
30.12 Test Settings 1002
30.12.1 Self-Test Mode Setting Procedure 1002
30.12.2 Protection Unlock Procedure 1003

30.12.3 RAM Test Setting Procedure 1004
30.13 Notes on the CAN Module 1005
31. Serial Peripheral Interface (RSPIb) 1006
31.1 Overview 1006
31.2 Register Descriptions 1010
31.2.1 RSPI Control Register (SPCR) 1010
31.2.2 RSPI Slave Select Polarity Register (SSLP) 1012
31.2.3 RSPI Pin Control Register (SPPCR) 1013
31.2.4 RSPI Status Register (SPSR) 1014
31.2.5 RSPI Data Register (SPDR) 1017
31.2.6 RSPI Sequence Control Register (SPSCR) 1020
31.2.7 RSPI Sequence Status Register (SPSSR) 1021
31.2.8 RSPI Bit Rate Register (SPBR) 1022
31.2.9 RSPI Data Control Register (SPDCR) 1023
31.2.10 RSPI Clock Delay Register (SPCKD) 1025
31.2.11 RSPI Slave Select Negation Delay Register (SSLND) 1026
31.2.12 RSPI Next-Access Delay Register (SPND) 1027
31.2.13 RSPI Control Register 2 (SPCR2) 1028
31.2.14 RSPI Command Register m (SPCMDm) (m = 0 to 7) 1029
31.3 Operation 1032
31.3.1 Overview of RSPI Operations 1032
31.3.2 Controlling RSPI Pins 1033
31.3.3 RSPI System Configuration Examples 1034
31.3.3.1 Single Master/Single Slave (with This MCU Acting as Master) 1034
31.3.3.2 Single Master/Single Slave (with This MCU Acting as Slave) 1035
31.3.3.3 Single Master/Multi-Slave (with This MCU Acting as Master) 1036
31.3.3.4 Single Master/Multi-Slave (with This MCU Acting as Slave) 1037
31.3.3.5 Multi-Master/Multi-Slave (with This MCU Acting as Master) 1038
31.3.3.6 Master (Clock Synchronous Operation)/Slave (Clock Synchronous Operation) (with This MCU Acting as Master) 1039
31.3.3.7 Master (Clock Synchronous Operation)/Slave (Clock Synchronous Operation) (with This MCU Acting as Slave) 1039
31.3.4 Data Format 1040
31.3.4.1 When Parity is Disabled (SPCR2.SPPE = 0) 1041
31.3.4.2 When Parity is Enabled (SPCR2.SPPE = 1) 1045
31.3.5 Transfer Format 1049
31.3.5.1 CPHA = 0 1049
31.3.5.2 CPHA = 1 1050
31.3.6 Communications Operating Mode 1051
31.3.6.1 Full-Duplex Communications (SPCR.TXMD = 0) 1051
31.3.6.2 Transmit-only Simplex Communications (SPCR.TXMD = 1) 1052

31.3.7 Transmit Buffer Empty/Receive Buffer Full Interrupts 1053
31.3.8 Idle Interrupt 1054
31.3.9 Error Detection 1055
31.3.9.1 Overrun Error 1056
31.3.9.2 Parity Error 1058
31.3.9.3 Mode Fault Error 1059
31.3.9.4 Underrun Error 1059
31.3.10 Initializing RSPI 1060
31.3.10.1 Initialization by Clearing the SPE Bit 1060
31.3.10.2 System Reset 1060
31.3.11 SPI Operation 1061
31.3.11.1 Master Mode Operation 1061
31.3.11.2 Slave Mode Operation 1071
31.3.12 Clock Synchronous Operation 1075
31.3.12.1 Master Mode Operation 1075
31.3.12.2 Slave Mode Operation 1079
31.3.13 Loopback Mode 1081
31.3.14 Self-Diagnosis of Parity Bit Function 1082
31.3.15 Interrupt Sources 1083
31.4 Link Operation by Event Linking 1084
31.4.1 Receive Buffer Full Event Output 1084
31.4.2 Transmit Buffer Empty Event Output 1084
31.4.3 Mode Fault, Underrun, Overrun, or Parity Error Event Output 1084
31.4.4 Idle Event Output 1085
31.4.5 Transmit End Event Output 1085
31.5 Usage Notes 1086
31.5.1 Setting Module Stop Function 1086
31.5.2 Note on Low Power Consumption Functions 1086
31.5.3 Notes on Starting Transfer 1086
31.5.4 Notes on the SPRF and SPTEF flags 1086
32. CRC Calculator (CRC) 1087
32.1 Overview 1087
32.2 Register Descriptions 1088
32.2.1 CRC Control Register (CRCCR) 1088
32.2.2 CRC Data Input Register (CRCDIR) 1088
32.2.3 CRC Data Output Register (CRCDOR) 1089
32.3 Operation 1090
32.4 Usage Notes 1093
32.4.1 Module Stop Function Setting 1093
32.4.2 Note on Transmission 1093

33. Analog Front End (AFE) 1094
33.1 Overview 1094
33.2 Register Descriptions 1101
33.2.1 AFE Operation Control Register (OPCR) 1101
33.2.2 Voltage Detector Control Register (VDETCR) 1103
33.2.3 Voltage Detection Enable Register (VDETER) 1105
33.2.4 Bias Voltage Output Select Register (VBOSR) 1108
33.2.5 Temperature Sensor Zeroth-Order Temperature Coefficient Register (TC0R) 1109
33.2.6 Temperature Sensor First-Order Temperature Coefficient Register (TC1R) 1109
33.2.7 Temperature Sensor Second-Order Temperature Coefficient Register (TC2R) 1110
33.2.8 Low-Side Switch Control Register (LSWC) 1110
33.2.9 DSAD0 Channel m Input Select Register (DS0mISR) (m = 0 to 5) 1111
33.2.10 DSAD1 Channel m Input Select Register (DS1mISR) (m = 0 to 5) 1113
33.2.11 Excitation Current Control Register (EXCCR) 1115
33.2.12 Excitation Current Output Select Register (EXCOSR) 1116
33.3 Operation 1117
33.3.1 Analog Multiplexer (AMUX) 1117
33.3.2 Voltage Reference (VREF) 1118
33.3.3 Bias Voltage Generator (VBIAS) 1119
33.3.4 Temperature Sensor (TEMPS) 1120
33.3.5 Excitation Current Sources (IEXC) 1121
33.3.6 Voltage Detector (VDET) 1122
33.3.6.1 Low Voltage Detector for Power Supply (LVDET) 1122
33.3.6.2 DSAD Input Voltage Fault Detector (DSIDET) 1123
33.3.6.3 DSAD Reference Voltage Fault Detector (DSRDET) 1124
33.3.6.4 Excitation Current Source Disconnect Detector (IEXCDET) 1125
33.3.7 Initializing the AFE 1126
33.3.8 Activating VDET 1127
33.4 Notes 1128
33.4.1 Setting the Module Stop Function 1128
33.4.2 Notes on Setting the Analog Input Pins 1128
33.4.3 Notes on Using the VBIAS 1128
33.4.4 Notes on Using the IEXC 1128
33.4.5 Notes on Setting the Analog Power Supply Pins 1128
33.4.6 Handling of Unused Pins 1129
34. 24-bit Delta-Sigma A/D Converters (DSADA) 1130
34.1 Overview 1130
34.2 Register Descriptions 1133
34.2.1 DSAD Operating Clock Control Register (CCR) 1133
34.2.2 DSAD Operating Mode Register (MR) 1134
34.2.3 Channel m Operating Mode Register (MRm) (m = 0 to 5) 1136

34.2.4 Channel m Control Register (CRm) (m = 0 to 5) 1138
34.2.5 A/D Conversion Start Register (ADST) 1141
34.2.6 A/D Conversion Stop Register (ADSTP) 1142
34.2.7 Data Register (DR) 1143
34.2.8 Averaged Value Data Register (AVDR) 1144
34.2.9 Status Register (SR) 1145
34.2.10 Channel m Oversampling Ratio Setting Registers (OSRm) (m = 0 to 5) 1146
34.2.11 Channel m Gain Calibration Registers (GCRm) (m = 0 to 5) 1148
34.2.12 Channel m Offset Calibration Register (OFCRm) (m = 0 to 5) 1149
34.3 Details of Functions 1150
34.3.1 Overview of Functions 1150
34.3.2 Setting the Analog Input Channels 1150
34.3.3 Programmable Gain Instrumentation Amplifiers (PGAs) 1151
34.3.4 DSAD Configuration 1152
34.3.5 Input Voltages to the DSAD and the Results of A/D Conversion 1153
34.3.6 Control of the DSADs 1154
34.3.7 Digital Filter 1158
34.3.7.1 Digital Filter Operation 1158
34.3.7.2 Settling Time 1158
34.3.7.3 Characteristics of Digital Filter 1159
34.3.8 A/D Conversion Modes 1160
34.3.9 Offset Error and Gain Error Calibration Function 1161
34.3.9.1 Calculating the Offset and Gain Error Calibration Coefficients 1161
34.3.10 Disconnect Detection Assist Function 1162
34.3.11 Inter-Unit Synchronized Start Function 1163
34.4 Flows of Control 1164
34.4.1 Clock Settings 1164
34.4.2 Common Settings for All Channels 1165
34.4.3 Individual Settings for Each Channel 1165
34.4.4 A/D Conversion 1166
34.4.5 Stop Auto Scan 1167
34.4.6 Calculation of Calibration Coefficients for Offset Error and Gain Error 1168
34.4.7 Detect Disconnection 1169
34.5 Usage Notes 1170
34.5.1 Settings of the Module Stop Function 1170
34.5.2 Transition to the Low Power Consumption State 1170
34.5.3 Notes on Setting the Operating Clock 1170
34.5.4 Notes on Changing the Operating Clock 1170
34.5.5 Notes on Changing the SYNCST Bit 1170
34.5.6 Notes on Using Two DSAD units 1170

35. 12-Bit A/D Converter (S12ADE) 1171
35.1 Overview 1171
35.2 Register Descriptions 1175
35.2.1 A/D Data Registers y (ADDRy) (y = 0 to 5), A/D Data Duplication Register (ADDBLDR) 1175
35.2.2 A/D Self-Diagnosis Data Register (ADRD) 1177
35.2.3 A/D Control Register (ADCSR) 1178
35.2.4 A/D Channel Select Register A0 (ADANSA0) 1181
35.2.5 A/D Channel Select Register B0 (ADANSB0) 1182
35.2.6 A/D-Converted Value Addition/Average Function Select Register 0 (ADADS0) 1183
35.2.7 A/D-Converted Value Addition/Average Count Select Register (ADADC) 1185
35.2.8 A/D Control Extended Register (ADCER) 1186
35.2.9 A/D Conversion Start Trigger Select Register (ADSTRGR) 1188
35.2.10 A/D Sampling State Register n (ADSSTRn) (n = 0 to 5) 1190
35.2.11 A/D Disconnection Detection Control Register (ADDISCR) 1191
35.2.12 A/D Event Link Control Register (ADELCCR) 1192
35.2.13 A/D Group Scan Priority Control Register (ADGSPCR) 1193
35.2.14 A/D Compare Function Control Register (ADCMPCR) 1194
35.2.15 A/D Compare Function Window A Channel Select Register 0 (ADCMPANSR0) 1196
35.2.16 A/D Compare Function Window A Comparison Condition Setting Register 0 (ADCMPLR0) 1197
35.2.17 A/D Compare Function Window A Lower-Side Level Setting Register (ADCMPDR0) 1199
35.2.18 A/D Compare Function Window A Upper-Side Level Setting Register (ADCMPDR1) 1201
35.2.19 A/D Compare Function Window A Channel Status Register 0 (ADCMPSR0) 1203
35.2.20 A/D High-Potential/Low-Potential Reference Voltage Control Register (ADHVREFCNT) 1204
35.2.21 A/D Compare Function Window A/B Status Monitor Register (ADWINMON) 1205
35.2.22 A/D Compare Function Window B Channel Select Register (ADCMPBNSR) 1206
35.2.23 A/D Compare Function Window B Lower-Side Level Setting Register (ADWINLLB) 1208
35.2.24 A/D Compare Function Window B Upper-Side Level Setting Register (ADWINULB) 1210
35.2.25 A/D Compare Function Window B Channel Status Register (ADCMPBSR) 1211
35.2.26 A/D Data Storage Buffer Register n (ADBUFn) (n = 0 to 15) 1212
35.2.27 A/D Data Storage Buffer Enable Register (ADBUFEN) 1213
35.2.28 A/D Data Storage Buffer Pointer Register (ADBUFPTR) 1214
35.3 Operation 1215
35.3.1 Scanning Operation 1215
35.3.2 Single Scan Mode 1216
35.3.2.1 Basic Operation 1216
35.3.2.2 Channel Selection and Self-Diagnosis 1217
35.3.2.3 A/D Conversion in Double Trigger Mode 1218
35.3.3 Continuous Scan Mode 1219
35.3.3.1 Basic Operation 1219

35.3.3.2 Channel Selection and Self-Diagnosis 1220
35.3.4 Group Scan Mode 1221
35.3.4.1 Basic Operation 1221
35.3.4.2 A/D Conversion in Double Trigger Mode 1222
35.3.4.3 Operation under Group-A Priority Control 1223
35.3.5 Compare Function (Window A, Window B) 1233
35.3.5.1 Compare Function Window A/B 1233
35.3.5.2 ELC Output of Compare Function 1235
35.3.5.3 Using Data Buffers 1237
35.3.5.4 Restrictions for Compare Function 1238
35.3.6 Analog Input Sampling Time and Scan Conversion Time 1238
35.3.7 Usage Example of A/D Data Register Automatic Clearing Function 1240
35.3.8 A/D-Converted Value Addition/Average Mode 1241
35.3.9 Disconnection Detection Assist Function 1241
35.3.10 Starting A/D Conversion with Asynchronous Trigger 1243
35.3.11 Starting A/D Conversion with Synchronous Trigger from Peripheral Module 1243
35.4 Interrupt Sources and DTC/DMA Transfer Requests 1243
35.4.1 Interrupt Requests 1243
35.5 Event Link Function 1244
35.5.1 Event Output to the ELC 1244
35.5.2 12-Bit A/D Converter Operation by Event from the ELC 1244
35.5.3 Note on 12-Bit A/D Converter When an Event Is Input from the ELC 1244
35.6 Selecting Reference Voltage 1244
35.7 Allowable Impedance of Signal Source 1245
35.8 Usage Notes 1246
35.8.1 Notes on Reading Data Registers 1246
35.8.2 Notes on Stopping A/D Conversion 1246
35.8.3 A/D Conversion Restarting Timing and Termination Timing 1247
35.8.4 Notes on Scan End Interrupt Handling 1247
35.8.5 Module Stop Function Setting 1247
35.8.6 Notes on Entering Low Power Consumption States 1247
35.8.7 Notes on Canceling Software Standby Mode 1247
35.8.8 Error in Absolute Accuracy When Disconnection Detection Assistance is in Use 1247
35.8.9 ADHSC Bit Rewriting Procedure 1248
35.8.10 Voltage Range of Analog Power Supply Pins 1249
35.8.11 Notes on Board Design 1250
35.8.12 Notes on Noise Prevention 1250
35.8.13 Notes on Analog Input Pin Setting 1251
35.8.14 Notes on Setting the Reference Voltage 1251
36. Data Operation Circuit (DOC) 1252
36.1 Overview 1252

36.2 Register Descriptions 1253
36.2.1 DOC Control Register (DOCR) 1253
36.2.2 DOC Data Input Register (DODIR) 1254
36.2.3 DOC Data Setting Register (DODSR) 1254
36.3 Operation 1255
36.3.1 Data Comparison Mode 1255
36.3.2 Data Addition Mode 1256
36.3.3 Data Subtraction Mode 1257
36.4 Interrupt Requests 1257
36.5 Event Link Output 1258
36.5.1 Interrupt Handling and Event Linking 1258
36.6 Usage Note 1258
36.6.1 Module Stop Function Setting 1258
37. RAM 1259
37.1 Overview 1259
37.2 Operation 1259
37.2.1 Low Power Consumption Function 1259
37.2.2 Notes on Self-Diagnosis of the RAM 1259
38. Flash Memory (FLASH) 1260
38.1 Overview 1260
38.2 ROM Area and Block Configuration 1261
38.3 E2 DataFlash Area and Block Configuration 1262
38.4 Register Descriptions 1263
38.4.1 E2 DataFlash Control Register (DFLCTL) 1263
38.4.2 Flash P/E Mode Entry Register (FENTRYR) 1264
38.4.3 Protection Unlock Register (FPR) 1265
38.4.4 Protection Unlock Status Register (FPSR) 1265
38.4.5 Flash P/E Mode Control Register (FPMCR) 1266
38.4.6 Flash Initial Setting Register (FISR) 1267
38.4.7 Flash Reset Register (FRESETR) 1269
38.4.8 Flash Area Select Register (FASR) 1269
38.4.9 Flash Control Register (FCR) 1270
38.4.10 Flash Extra Area Control Register (FEXCR) 1272
38.4.11 Flash Processing Start Address Register H (FSARH) 1273
38.4.12 Flash Processing Start Address Register L (FSARL) 1273
38.4.13 Flash Processing End Address Register H (FEARH) 1274
38.4.14 Flash Processing End Address Register L (FEARL) 1274
38.4.15 Flash Write Buffer Register n (FWBn) (n = 0 to 3) 1275
38.4.16 Flash Status Register 0 (FSTATR0) 1276
38.4.17 Flash Status Register 1 (FSTATR1) 1278
38.4.18 Flash Error Address Monitor Register H (FEAMH) 1279

38.4.19 Flash Error Address Monitor Register L (FEAML) 1279
38.4.20 Flash Start-Up Setting Monitor Register (FSCMR) 1280
38.4.21 Flash Access Window Start Address Monitor Register (FAWSMR) 1280
38.4.22 Flash Access Window End Address Monitor Register (FAWEMR) 1281
38.4.23 Unique ID Register n (UIDRn) (n = 0 to 3) 1281
38.5 Start-Up Program Protection 1282
38.6 Area Protection 1283
38.7 Programming and Erasure 1284
38.7.1 Sequencer Modes 1284
38.7.1.1 E2 DataFlash Access Disabled Mode 1284
38.7.1.2 Read Mode 1285
38.7.1.3 P/E Modes 1285
38.7.2 Mode Transitions 1285
38.7.2.1 Transition from E2 DataFlash Access Disable Mode to Read Mode 1285
38.7.2.2 Transition from Read Mode to P/E Mode 1286
38.7.2.3 Transition from P/E Mode to Read Mode 1288
38.7.3 Software Commands 1290
38.7.4 Software Command Usage 1291
38.7.4.1 Program 1291
38.7.4.2 Block Erase 1293
38.7.4.3 All-Block Erase 1295
38.7.4.4 Blank Check 1297
38.7.4.5 Start-Up Area Information Program/Access Window Information Program 1299
38.7.4.6 Forced Stop of Software Commands 1300
38.7.5 Interrupt 1300
38.8 Boot Mode 1301
38.8.1 Boot Mode (SCI Interface) 1302
38.8.1.1 Operating Conditions in Boot Mode (SCI Interface) 1302
38.8.1.2 Starting Up in Boot Mode (SCI Interface) 1303
38.8.2 Boot Mode (FINE Interface) 1304
38.8.2.1 Operating Conditions in Boot Mode (FINE Interface) 1304
38.9 Flash Memory Protection 1305
38.9.1 ID Code Protection 1305
38.9.1.1 Boot Mode ID Code Protection 1306
38.9.1.2 On-Chip Debugging Emulator ID Code Protection 1307
38.10 Communication Protocol 1308
38.10.1 State Transition in Boot Mode (SCI Interface) 1308
38.10.2 Command and Response Configuration 1309
38.10.3 Response to Undefined Commands 1309
38.10.4 Boot Mode Status Inquiry 1310
38.10.5 Inquiry Commands 1311

38.10.5.1 Supported Device Inquiry 1311
38.10.5.2 Data Area Availability Inquiry 1312
38.10.5.3 User Area Information Inquiry 1312
38.10.5.4 Data Area Information Inquiry 1313
38.10.5.5 Block Information Inquiry 1313
38.10.6 Setting Commands 1314
38.10.6.1 Device Select 1314
38.10.6.2 Operating Frequency Select 1315
38.10.6.3 Program/Erase Host Command Wait State Transition 1316
38.10.7 ID Code Authentication Command 1317
38.10.7.1 ID Code Check 1317
38.10.8 Program/Erase Commands 1318
38.10.8.1 User/Data Area Program Preparation 1318
38.10.8.2 Program 1319
38.10.8.3 Data Area Program 1320
38.10.8.4 Erase Preparation 1321
38.10.8.5 Block Erase 1321
38.10.9 Read-Check Commands 1322
38.10.9.1 Memory Read 1322
38.10.9.2 User Area Checksum 1323
38.10.9.3 Data Area Checksum 1324
38.10.9.4 User Area Blank Check 1324
38.10.9.5 Data Area Blank Check 1325
38.10.9.6 Access Window Information Program 1325
38.10.9.7 Access Window Read 1326
38.11 Serial Programmer Operation in Boot Mode (SCI Interface) 1327
38.11.1 Bit Rate Automatic Adjustment 1328
38.11.2 Receive the MCU Information 1329
38.11.3 Select the Device and Change the Bit Rate 1330
38.11.4 Enter the Program/Erase Host Command Wait State 1331
38.11.5 Unlock Boot Mode ID Code Protection 1332
38.11.6 Erase the User Area and Data Area 1333
38.11.7 Program the User Area and Data Area 1334
38.11.8 Check Data in the User Area 1335
38.11.9 Check Data in the Data Area 1336
38.11.10 Set the Access Window in the User Area 1337
38.12 Rewriting by Self-Programming 1338
38.12.1 Overview 1338
38.13 Usage Notes 1339
38.14 Usage Notes in Boot Mode 1340

39. Electrical Characteristics 1341
39.1 Absolute Maximum Ratings 1341
39.2 Recommended Operating Conditions 1342
39.3 DC Characteristics 1343
39.3.1 Typical I/O Pin Output Characteristics (1) 1358
39.3.2 Typical I/O Pin Output Characteristics (2) 1361
39.3.3 Typical I/O Pin Output Characteristics (3) 1364
39.4 AC Characteristics 1366
39.4.1 Clock Timing 1366
39.4.2 Reset Timing 1370
39.4.3 Timing of Recovery from Low Power Consumption Modes 1371
39.4.4 Control Signal Timing 1373
39.4.5 Timing of On-Chip Peripheral Modules 1374
39.4.5.1 I/O ports 1374
39.4.5.2 MTU 1374
39.4.5.3 POE 1375
39.4.5.4 TMR 1377
39.4.5.5 SCI 1377
39.4.5.6 RIIC 1379
39.4.5.7 RSPI 1380
39.4.5.8 A/D converter Trigger 1384
39.4.5.9 CAC 1385
39.4.5.10 CLKOUT 1385
39.5 Characteristics of Power-On Reset Circuit and Voltage Detection Circuit 1386
39.6 Oscillation Stop Detection Timing 1390
39.7 ROM (Code Flash Memory) Characteristics 1391
39.8 E2 DataFlash (Data Flash Memory) Characteristics 1393
39.9 24-Bit Delta-Sigma A/D Converter Characteristics 1394
39.10 Analog Front End Characteristics 1405
39.11 12-Bit A/D Conversion Characteristics 1410
39.12 Usage Notes 1416
39.12.1 Connecting VCL Capacitor and Bypass Capacitors 1416
Appendix 1. Port States in Each Processing Mode 1418
Appendix 2. Package Dimensions 1419
REVISION HISTORY 1421

32-MHz, 32-bit RX MCUs with up to 256-KB flash memory, 2 low-noise and low-drift 24-bit delta-sigma A/D converters, rail-to-rail programmable gain instrumentation amplifiers, a low-drift voltage reference, and on-chip excitation current sources

Features

■ 32-bit RXv2 CPU core
- Max. operating frequency: 32 MHz
  Capable of 64 DMIPS in operation at 32 MHz
- Enhanced DSP: 32-bit multiply-accumulate and 16-bit multiply-subtract instructions supported
- Built-in FPU: 32-bit single-precision floating point (compliant to IEEE754)
- Divider (fastest instruction execution takes two CPU clock cycles)
- Fast interrupt
- CISC Harvard architecture with 5-stage pipeline
- Variable-length instructions, ultra-compact code
- On-chip debugging circuit
- Memory protection unit (MPU) supported

■ Low power design and architecture
- Operation from a single 1.8-V to 5.5-V supply
- Three low power consumption modes
- Low power timer (LPT) that operates during the software standby state

■ On-chip flash memory for code
- Read cycle of 31.25 ns in 32-MHz operation
- No waiting time when the CPU is reading at full speed
- 128-Kbyte to 256-Kbyte capacities
- On-board or off-board user programming
- Programmable at 1.8 V
- For instructions and operands

■ On-chip data flash memory
- 8 Kbytes (1,000,000 program/erase cycles (typ.))
- BGO (Background Operation)

■ On-chip SRAM, no wait states
- 16- to 32-Kbyte size capacities

■ Data transfer functions
- DMAC: Incorporates four channels
- DTC: Four transfer modes

■ ELC
- Module operation can be initiated by event signals without using interrupts.
- Linked operation between modules is possible while the CPU is sleeping.

■ Reset and supply management
- Seven types of reset, including the power-on reset (POR)
- Low voltage detection (LVD) with voltage settings

■ Clock functions
- Main clock oscillator frequency: 1 MHz to 20 MHz
- External clock input frequency: Up to 20 MHz
- PLL circuit input: 4 MHz to 8 MHz
- On-chip low- and high-speed oscillators, dedicated on-chip low-speed oscillator for the IWDT
- Clock frequency accuracy measurement circuit (CAC)

■ Independent watchdog timer
- 15-kHz on-chip oscillator produces a dedicated clock signal to drive IWDT operation.

■ Useful functions for IEC60730 compliance
- Self-diagnostic and disconnect detection assistance functions for the A/D converter, clock frequency accuracy measurement circuit, independent watchdog timer, RAM test assistance functions using the DOC, etc.

■ MPC
- Input/output functions selectable from multiple pins

■ Up to eight communication functions
- CAN (one channel) compliant to ISO11898-1:
  Transfer at up to 1 Mbps
- SCI with many useful functions (up to four channels),
  asynchronous mode, clock synchronous mode, smart card interface, reduction of errors in communications using the bit rate modulation function
- I^2C bus interface: Transfer at up to 400 kbps, capable of SMBus operation (one channel)
- RSPI (one channel): Transfer at up to 16 Mbps

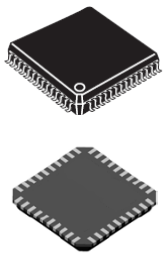

PLQP0048KB-B 7 × 7 mm, 0.5 mm pitch

PWQN0040KD-A 6 × 6 mm, 0.5 mm pitch

■ Up to 12 extended-function timers
- 16-bit MTU: input capture, output compare, complementary PWM output, phase counting mode (six channels)
- 8-bit TMR (four channels)
- 16-bit compare-match timers (two channels)

■ Analog functions
- Two 24-bit delta-sigma A/D converters
- A/D converter with up to 23-bit effective resolution (gain = 1, output data rate = 7.6 SPS)
- High-precision programmable gain instrumentation amplifier,
  30 nV_{RMS} (gain = 128, output data rate = 7.6 SPS)
- Rail-to-rail programmable gain instrumentation amplifier
  (gain = 1 to 128)
- Two operating modes and programmable data rates,
  Normal mode: Output data rate of 7.6 SPS to 15625 SPS,
  Low power mode: Output data rate of 1.9 SPS to 3906 SPS
- Offset drift 10 nV/°C (gain = 128)
- Gain drift 1 ppm/°C (gain = 1 (PGA), gain = 2 to 128)
- Up to six differential inputs, 11 single-ended inputs
- Fourth-order sinc filter
- Simultaneous 50 Hz/60 Hz rejection (output data rate = 10, 54 SPS)
- Offset error and gain error calibration
- Inter-unit A/D conversion synchronized start
- Delta-sigma A/D input disconnect detection assist
- Delta-sigma A/D reference voltage external input
- Voltage reference
  output voltage: 2.5 V,
  temperature drift: 10 ppm/°C, output current: ±10 mA
- Excitation current sources: Up to four,
  Output current: 50 µA to 1000 µA, current matching: ±0.2%, drift matching: 5 ppm/°C
- Bias voltage generator
  output voltage: (AVCC0 + AVSS0)/2
- Temperature sensor: Accuracy ±5°C
- Low-side switch: 10 Ω on-resistance
- Low power-supply-voltage detectors
- Delta-sigma A/D input voltage fault detectors
- Delta-sigma A/D reference voltage fault detectors and disconnect detectors
- Excitation current source disconnect detectors

■ 12-bit A/D converter
- Capable of conversion within 1.4 µs
- Six channels
- Sampling time can be set for each channel
- Self-diagnostic function and analog input disconnect detection assistance function

■ General I/O ports
- 5-V tolerant, open drain, input pull-up, switching of driving capacity

■ Operating temperature range
- –40°C to +85°C
- –40°C to +105°C

■ Applications
- General industrial and consumer equipment

1. Overview

1.1 Outline of Specifications

Table 1.1 lists the specifications, and Table 1.2 gives a comparison of the functions of the products in different packages.

Table 1.1 is for products with the greatest number of functions, so the number of peripheral modules and channels will differ in accordance with the package type. For details, see Table 1.2, Comparison of Functions for Different Packages.

Table 1.1 Outline of Specifications (1/4)

Classification	Module/Function	Description
CPU	CPU	• Maximum operating frequency: 32 MHz • 32-bit RX CPU (RX v2) • Minimum instruction execution time: One instruction per clock cycle • Address space: 4-Gbyte linear • Register set General purpose: Sixteen 32-bit registers Control: Ten 32-bit registers Accumulator: Two 72-bit registers • Basic instructions: 75 (variable-length instruction format) • Floating-point instructions: 11 • DSP instructions: 23 • Addressing modes: 10 • Data arrangement Instructions: Little endian Data: Selectable as little endian or big endian • On-chip 32-bit multiplier: 32-bit × 32-bit → 64-bit • On-chip divider: 32-bit ÷ 32-bit → 32 bits • Barrel shifter: 32 bits • Memory protection unit (MPU)
	FPU	• Single precision (32-bit) floating point • Data types and exceptions in conformance with the IEEE754 standard
Memory	ROM	• Capacity: 128/256 Kbytes • 32 MHz: No-wait access • Programming/erasing method: Serial programming (asynchronous serial communication), self-programming
	RAM	• Capacity: 16/32 Kbytes • 32 MHz, no-wait memory access
	E2 DataFlash	• Capacity: 8 Kbytes • Number of erase/write cycles: 1,000,000 (typ)
MCU operating mode		Single-chip mode
Clock	Clock generation circuit	• Main clock oscillator, low-speed on-chip oscillator, high-speed on-chip oscillator, PLL frequency synthesizer, and IWDT-dedicated on-chip oscillator • Oscillation stop detection: Available • Clock frequency accuracy measurement circuit (CAC) • Independent settings for the system clock (ICLK), peripheral module clock (PCLK), and FlashIF clock (FCLK) The CPU and system sections such as other bus masters run in synchronization with the system clock (ICLK): 32 MHz (at max.) MTU2a runs in synchronization with the PCLKA: 32 MHz (at max.) The ADCLK for the S12AD runs in synchronization with the PCLKD: 32 MHz (at max.) Peripheral modules other than MTU2a and S12AD run in synchronization with the PCLKB: 32 MHz (at max.) The flash peripheral circuit runs in synchronization with the FCLK: 32 MHz (at max.)
Resets		RES# pin reset, power-on reset, voltage monitoring reset, independent watchdog timer reset, and software reset
Voltage detection	Voltage detection circuit (LVDAb)	• When the voltage on VCC falls below the voltage detection level, an internal reset or internal interrupt is generated. Voltage detection circuit 0 is capable of selecting the detection voltage from 4 levels Voltage detection circuit 1 is capable of selecting the detection voltage from 14 levels Voltage detection circuit 2 is capable of selecting the detection voltage from 4 levels

Table 1.1 Outline of Specifications (2/4)

Classification	Module/Function	Description
Low power consumption	Low power consumption functions	• Module stop function • Three low power consumption modes Sleep mode, deep sleep mode, and software standby mode • Low power timer that operates during the software standby state
	Function for lower operating power consumption	• Operating power control modes High-speed operating mode and middle-speed operating mode
Interrupt	Interrupt controller (ICUb)	• Interrupt vectors: 256 • External interrupts: 9 (NMI, IRQ0 to IRQ7 pins) • Non-maskable interrupts: 5 (NMI pin, oscillation stop detection interrupt, voltage monitoring 1 interrupt, voltage monitoring 2 interrupt, and IWDT interrupt) • 16 levels specifiable for the order of priority
DMA	DMA controller (DMACA)	• 4 channels • Three transfer modes: Normal transfer, repeat transfer, and block transfer • Activation sources: Software trigger, external interrupts, and interrupt requests from peripheral functions
	Data transfer controller (DTCa)	• Transfer modes: Normal transfer, repeat transfer, and block transfer • Activation sources: Interrupts • Chain transfer function
I/O ports	General I/O ports	48-pin/40-pin I/O: 20/16 • Input: 1/1 Pull-up resistors: 20/16 • Open-drain outputs: 20/16 • 5-V tolerance: 2/2
Event link controller (ELC)		• Event signals of 56 types can be directly connected to the module • Operations of timer modules are selectable at event input • Capable of event link operation for port B
Multi-function pin controller (MPC)		Capable of selecting the input/output function from multiple pins
Timers	Multi-function timer pulse unit 2 (MTU2a)	• (16 bits × 6 channels) × 1 unit • Up to 16 pulse-input/output lines and three pulse-input lines are available based on the six 16-bit timer channels • Select from among eight or seven counter-input clock signals for each channel (PCLK/1, PCLK/4, PCLK/16, PCLK/64, PCLK/256, PCLK/1024, MTCLKA, MTCLKB, MTCLKC, MTCLKD) other than channel 5, for which only four signals are available. • Input capture function • 21 output compare/input capture registers • Pulse output mode PWM/complementary PWM/reset synchronous PWM • Phase-counting mode • Capable of generating conversion start triggers for the A/D converter
	Port output enable 2 (POE2a)	Controls the high-impedance state of the MTU's waveform output pins
	Compare match timer (CMT)	• (16 bits × 2 channels) × 1 unit • Select from among four clock signals (PCLK/8, PCLK/32, PCLK/128, PCLK/512)
	Independent watchdog timer (IWDTa)	• 14 bits × 1 channel • Count clock: Dedicated low-speed on-chip oscillator for the IWDT Frequency divided by 1, 16, 32, 64, 128, or 256
	Low power timer (LPT)	• 16 bits × 1 channel • Clock source: Dedicated low-speed on-chip oscillator for the IWDT Frequency divided by 2, 4, 8, 16, or 32
	8-bit timer (TMR)	• (8 bits × 2 channels) × 2 units • Seven internal clocks (PCLK/1, PCLK/2, PCLK/8, PCLK/32, PCLK/64, PCLK/1024, and PCLK/8192) and an external clock can be selected • Pulse output and PWM output with any duty cycle are available • Two channels can be cascaded and used as a 16-bit timer

Table 1.1 Outline of Specifications (3/4)

Classification	Module/Function	Description
Communication functions	Serial communications interfaces (SCIg, SCIh)	• 4 channels (channel 1, 5, 6: SCIg, channel 12: SCIh) • SCIg Serial communications modes: Asynchronous, clock synchronous, and smart-card interface Multi-processor function On-chip baud rate generator allows selection of the desired bit rate Choice of LSB-first or MSB-first transfer Average transfer rate clock can be input from TMR timers for SCI5, SCI6, and SCI12 Start-bit detection: Level or edge detection is selectable. Simple I^2C Simple SPI 9-bit transfer mode Bit rate modulation Event linking by the ELC (only on channel 5) • SCIh (The following functions are added to SCIg) Supports the serial communications protocol, which contains the start frame and information frame Supports the LIN format
	I^2C bus interface (RIICa)	• 1 channel • Communications formats: I^2C bus format/SMBus format • Master mode or slave mode selectable • Supports fast mode
	Serial peripheral interface (RSPIb)	• 1 channel • Transfer facility Using the MOSI (master out, slave in), MISO (master in, slave out), SSL (slave select), and RSPCK (RSPI clock) enables serial transfer through SPI operation (four lines) or clock-synchronous operation (three lines) • Capable of handling serial transfer as a master or slave • Data formats • Choice of LSB-first or MSB-first transfer The number of bits in each transfer can be changed to 8, 9, 10, 11, 12, 13, 14, 15, 16, 20, 24, or 32 bits. 128-bit buffers for transmission and reception Up to four frames can be transmitted or received in a single transfer operation (with each frame having up to 32 bits) • Double buffers for both transmission and reception
	CAN module (RSCAN)	• 1 channel • Compliance with the ISO11898-1 specification (standard frame and extended frame) • 16 Message boxes
24-bit delta-sigma A/D converter (DSAD)		• 24 bits (6 channels × 2 units) • Type of A/D conversion: delta-sigma • Post filter: Fourth-order sinc filter • 24-bit resolution • Input types: Differential, pseudo-differential, or single-ended • Operating modes Normal mode/low-power mode • Modulator clock: 500 kHz (typ.; 125 kHz in low-power mode) • Oversampling ratio: 32 to 65536 (only multiples of 16) • Includes a programmable gain instrumentation amplifier (PGA) Gain settings: ×1, ×2, ×4, ×8, ×16, ×32, ×64, ×128 PGA bypass function: with or without an analog input buffer • Configuration settings per channel • Conditions for starting A/D conversion: software trigger or ELC • Disconnect detection assist • Selectable reference voltage

Table 1.1 Outline of Specifications (4/4)

Classification	Module/Function	Description
Analog front end (AFE)		• Voltage reference (VREF) Output voltage: 2.5V • Output from bias voltage source (VBIAS) Output voltage: (AVCC0 + AVSS0)/2 • Internal temperature sensor (TEMPS) • Excitation current sources (IEXC) Two channels (up to 1000 μA) or four channels (up to 500 μA) Output current settings: 50 μA, 100 μA, 250 μA, 500 μA, 750 μA, 1000 μA • Analog multiplexer (AMUX) Select from among external pins, bias voltage sources, internal temperature sensor, or excitation current sources • Low-side switch (LSW) On-resistance: 10 Ω (max.) Allowable current: 30 mA (max.) • Voltage detector (VDET) Voltage monitoring of AVCC0 Detection of abnormal voltages at analog inputs Detection of abnormal reference voltages and assistance in detecting disconnection Assistance in detecting disconnection for excitation current source output
12-bit A/D converter (S12ADE)		• 12 bits (6 channels × 1 unit) • 12-bit resolution • Minimum conversion time: 1.4 μs per channel when the ADCLK is operating at 32 MHz • Operating modes Scan mode (single scan mode, continuous scan mode, and group scan mode) Group A priority control (only for group scan mode) • Sampling variable Sampling time can be set up for each channel. • Self-diagnostic function • Double trigger mode (A/D conversion data duplicated) • Detection of analog input disconnection • A/D conversion start conditions A software trigger, a trigger from a timer (MTU), an external trigger signal, or ELC • Event linking by the ELC
CRC calculator (CRC)		• CRC code generation for arbitrary amounts of data in 8-bit units • Select any of three generating polynomials: $X^8 + X^2 + X + 1$, $X^{16} + X^{15} + X^2 + 1$, or $X^{16} + X^{12} + X^5 + 1$ • Generation of CRC codes for use with LSB-first or MSB-first communications is selectable.
Data operation circuit (DOC)		Comparison, addition, and subtraction of 16-bit data
Power supply voltages/Operating frequencies		VCC = 1.8 to 2.4 V: 8 MHz, VCC = 2.4 to 2.7 V: 16 MHz, VCC = 2.7 to 5.5 V: 32 MHz AVCC0 = 2.7 to 5.5 V (1.8 to 5.5 V when only S12AD is operating)
Operating temperature range		D version: –40 to +85°C, G version: –40 to +105°C
Packages		48-pin LFQFP (PLQP0048KB-B) 7 × 7 mm, 0.5 mm pitch 40-pin HWQFN (PWQN0040KD-A) 6 × 6 mm, 0.5 mm pitch
Debugging interface		One-wire type FINE interface

Table 1.2 Comparison of Functions for Different Packages

Module/Functions		RX23E-A Group	
		48 Pins	**40 Pins**
Interrupts	External interrupts	NMI, IRQ0 to IRQ7	
DMA	DMA controller	4 channels (DMAC0 to DMAC3)	
	Data transfer controller	Available	
Timers	Multi-function timer pulse unit 2	6 channels (MTU0 to MTU5)	
	Port output enable 2	POE0# to POE3#, POE8#	
	8-bit timer	2 channels × 2 units	
	Compare match timer	2 channels × 1 unit	
	Low power timer	1 channel	
	Independent watchdog timer	Available	
Communication functions	Serial communications interfaces (SCIg)	3 channels (SCI1, 5, 6)	2 channels (SCI1, 5)
	Serial communications interfaces (SCIh)	1 channel (SCI12)	
	I^2C bus interface	1 channel	
	CAN module	1 channel	
	Serial peripheral interface	1 channel	
24-bit delta-sigma A/D converter		2 units, 6 channels of differential input	2 units, 4 channels of differential input
Analog front end	Voltage reference	Available	
	Excitation current sources	Available	
	Analog multiplexer	Available	
	Temperature sensor	Available	
	Voltage detector	Available	
12-bit A/D converter (including high-precision channels)		6 channels (6 channels)	4 channels (4 channels)
CRC calculator		Available	
Event link controller		Available	
Packages		48-pin LFQFP	40-pin HWQFN

1.2 List of Products

Table 1.3 is a list of products, and Figure 1.1 shows how to read the product part no., memory capacity, and package type.

Table 1.3 List of Products

Group	Part No.	Order Part No.	Package	ROM Capacity	RAM Capacity	E2 DataFlash	Operating Frequency	DSAD	Operating Temperature
RX23E-A	R5F523E6ADFL	R5F523E6ADFL#30	PLQP0048KB-B	256 Kbytes	32 Kbytes	8 Kbytes	32 MHz	2 Units	–40 to +85°C
	R5F523E6ADNF	R5F523E6ADNF#20	PWQN0040KD-A						
	R5F523E5ADFL	R5F523E5ADFL#30	PLQP0048KB-B	128 Kbytes	16 Kbytes				
	R5F523E5ADNF	R5F523E5ADNF#20	PWQN0040KD-A						
	R5F523E6AGFL	R5F523E6AGFL#30	PLQP0048KB-B	256 Kbytes	32 Kbytes				–40 to +105°C
	R5F523E6AGNF	R5F523E6AGNF#20	PWQN0040KD-A						
	R5F523E5AGFL	R5F523E5AGFL#30	PLQP0048KB-B	128 Kbytes	16 Kbytes				
	R5F523E5AGNF	R5F523E5AGNF#20	PWQN0040KD-A						
	R5F523E6SDFL	R5F523E6SDFL#30	PLQP0048KB-B	256 Kbytes	32 Kbytes			1 Unit	–40 to +85°C
	R5F523E6SDNF	R5F523E6SDNF#20	PWQN0040KD-A						
	R5F523E5SDFL	R5F523E5SDFL#30	PLQP0048KB-B	128 Kbytes	16 Kbytes				
	R5F523E5SDNF	R5F523E5SDNF#20	PWQN0040KD-A						
	R5F523E6SGFL	R5F523E6SGFL#30	PLQP0048KB-B	256 Kbytes	32 Kbytes				–40 to +105°C
	R5F523E6SGNF	R5F523E6SGNF#20	PWQN0040KD-A						
	R5F523E5SGFL	R5F523E5SGFL#30	PLQP0048KB-B	128 Kbytes	16 Kbytes				
	R5F523E5SGNF	R5F523E5SGNF#20	PWQN0040KD-A						

Note: Orderable part numbers are current as of when this manual was published. Please make sure to refer to the relevant product page on the Renesas website for the latest part numbers.

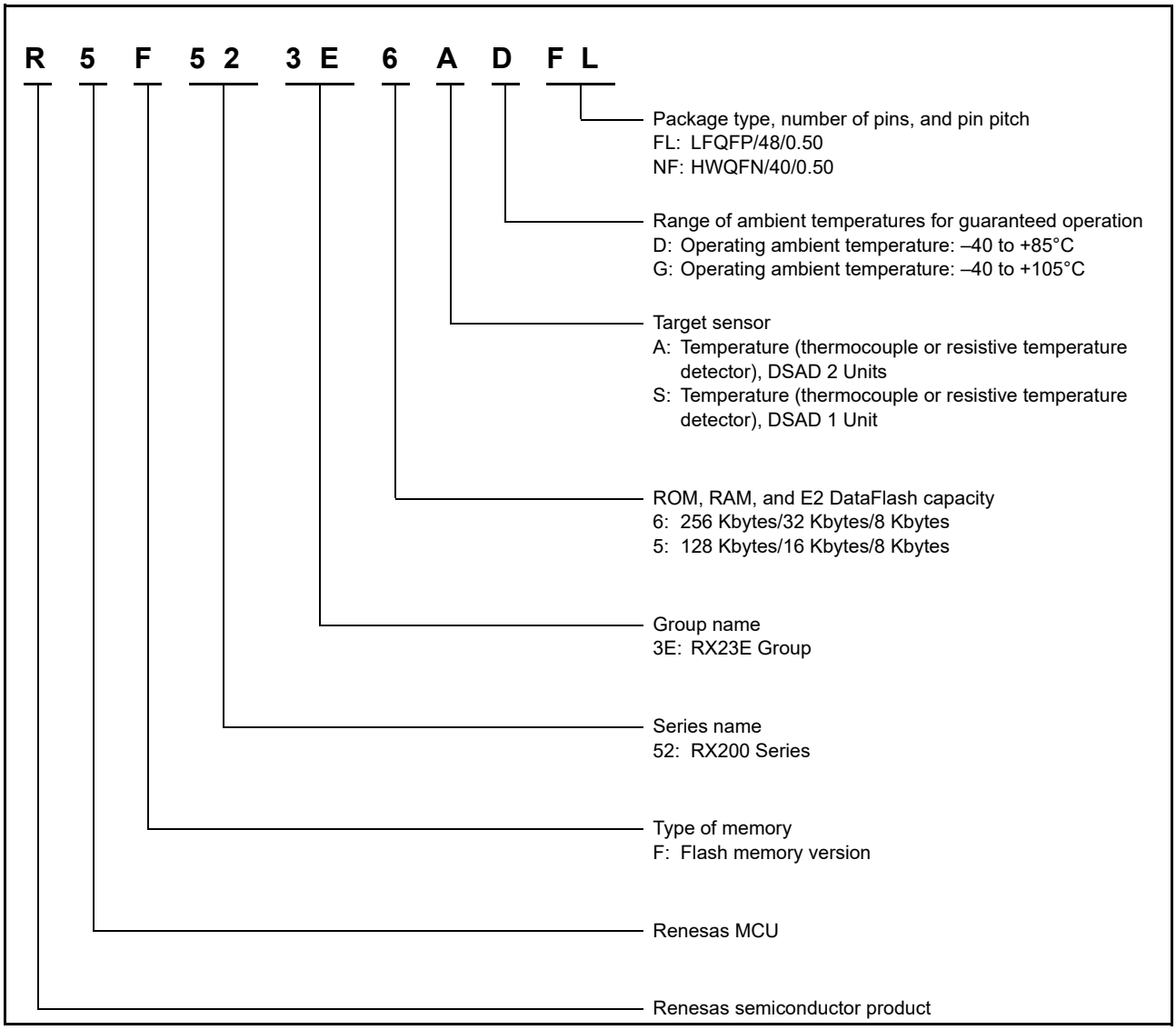

Figure 1.1 How to Read the Product Part Number

1.3 Block Diagram

Figure 1.2 shows a block diagram, and Figure 1.3 shows an analog block diagram.

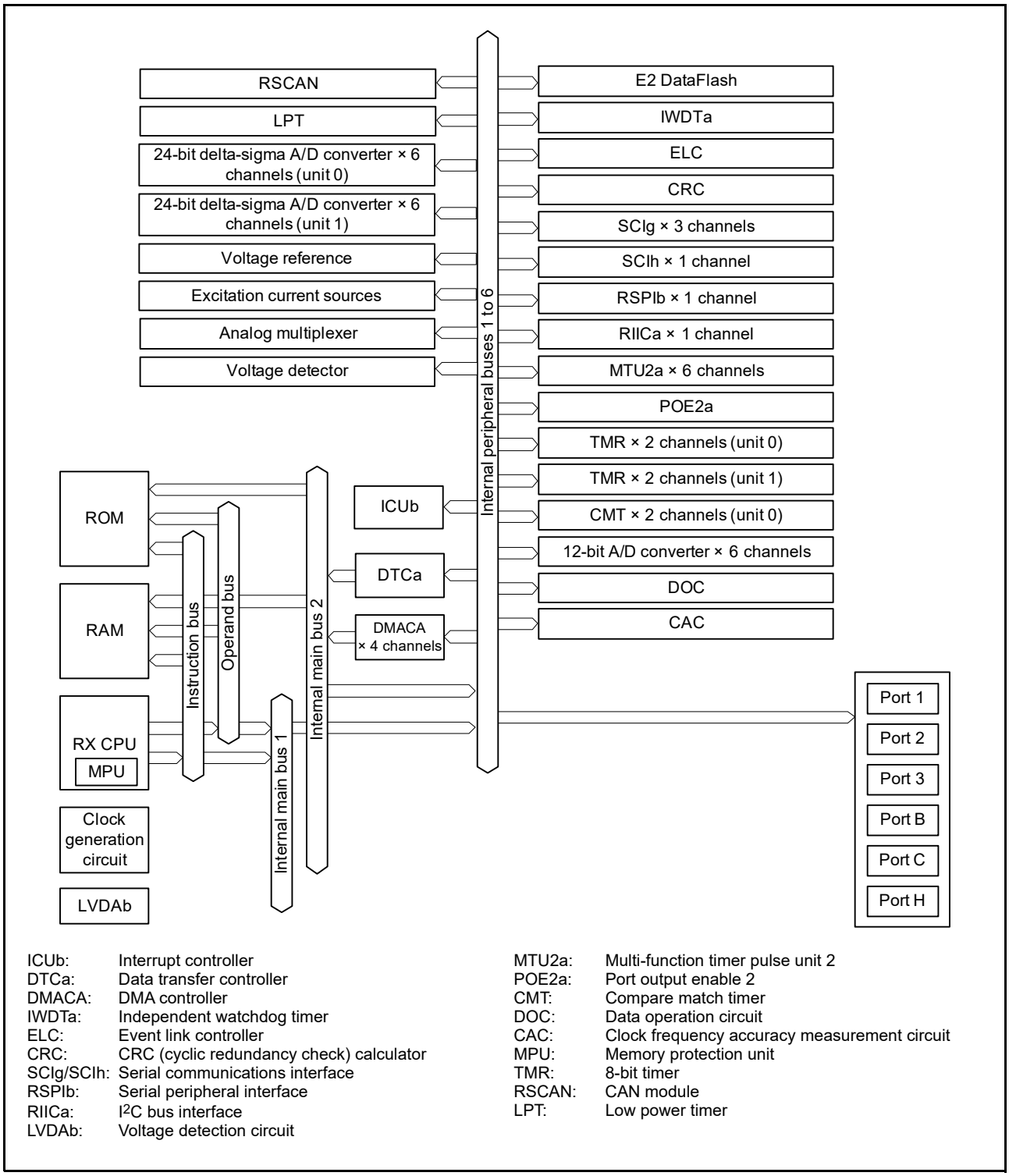

Figure 1.2 Block Diagram

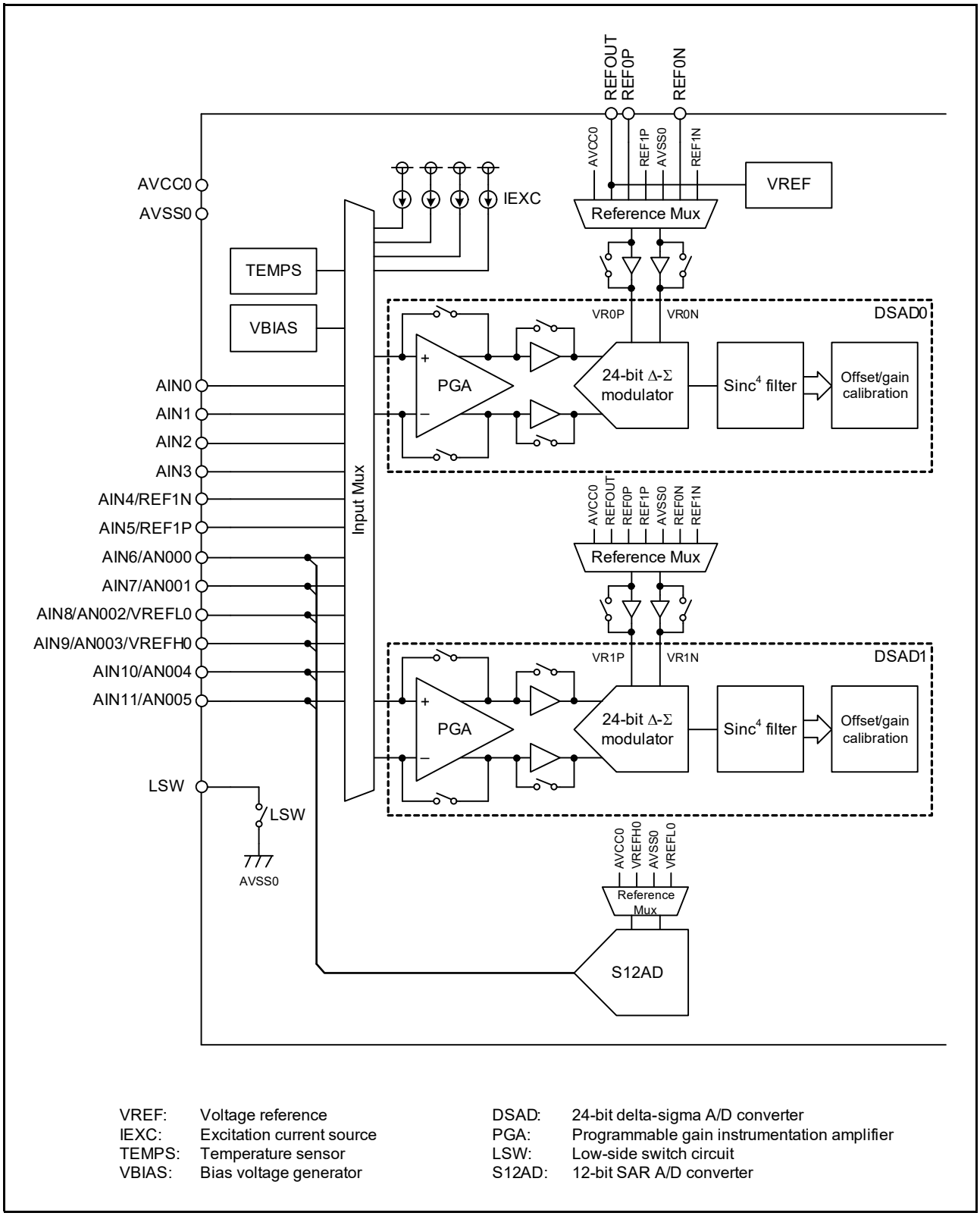

VREF:	Voltage reference	DSAD:	24-bit delta-sigma A/D converter
IEXC:	Excitation current source	PGA:	Programmable gain instrumentation amplifier
TEMPS:	Temperature sensor	LSW:	Low-side switch circuit
VBIAS:	Bias voltage generator	S12AD:	12-bit SAR A/D converter

Figure 1.3 Analog Block Diagram

1.4 Pin Functions

Table 1.4 lists the pin functions.

Table 1.4 Pin Functions (1/3)

Classifications	Pin Name	I/O	Description
Power supply	VCC	Input	Power supply pin. Connect it to the system power supply.
	VCL	—	Connect this pin to the VSS pin via the 4.7 μF smoothing capacitor used to stabilize the internal power supply. Place the capacitor close to the pin.
	VSS	Input	Ground pin. Connect it to the system power supply (0 V).
Clock	XTAL	Output	Pins for connecting a crystal. An external clock can be input through the EXTAL pin.
	EXTAL	Input	
	CLKOUT	Output	Clock output pin.
Operating mode control	MD	Input	Pin for setting the operating mode. The signal levels on this pin must not be changed during operation.
System control	RES#	Input	Reset pin. This MCU enters the reset state when this signal goes low.
CAC	CACREF	Input	Input pin for the clock frequency accuracy measurement circuit.
On-chip emulator	FINED	I/O	FINE interface pin.
Interrupts	NMI	Input	Non-maskable interrupt request pin.
	IRQ0 to IRQ7	Input	Interrupt request pins.
Multi-function timer pulse unit 2	MTIOC0A, MTIOC0B, MTIOC0C, MTIOC0D	I/O	The TGRA0 to TGRD0 input capture input/output compare output/PWM output pins.
	MTIOC1A, MTIOC1B	I/O	The TGRA1 and TGRB1 input capture input/output compare output/PWM output pins.
	MTIOC2A, MTIOC2B	I/O	The TGRA2 and TGRB2 input capture input/output compare output/PWM output pins.
	MTIOC3A, MTIOC3B, MTIOC3C, MTIOC3D	I/O	The TGRA3 to TGRD3 input capture input/output compare output/PWM output pins.
	MTIOC4A, MTIOC4B, MTIOC4C, MTIOC4D	I/O	The TGRA4 to TGRD4 input capture input/output compare output/PWM output pins.
	MTIC5U, MTIC5V, MTIC5W	Input	The TGRU5, TGRV5, and TGRW5 input capture input/external pulse input pins.
	MTCLKA, MTCLKB, MTCLKC, MTCLKD	Input	Input pins for the external clock.
Port output enable 2	POE0# to POE3#, POE8#	Input	Input pins for request signals to place the MTU pins in the high impedance state.
8-bit timer	TMO0 to TMO3	Output	Compare match output pins.
	TMCI0 to TMCI3	Input	Input pins for the external clock to be input to the counter.
	TMRI0 to TMRI3	Input	Counter reset input pins.
Serial communications interface (SCIg)	• Asynchronous mode/clock synchronous mode		
	SCK1, SCK5, SCK6	I/O	Input/output pins for the clock.
	RXD1, RXD5, RXD6	Input	Input pins for received data.
	TXD1, TXD5, TXD6	Output	Output pins for transmitted data.
	CTS1#, CTS5#, CTS6#	Input	Input pins for controlling the start of transmission and reception.
	RTS1#, RTS5#, RTS6#	Output	Output pins for controlling the start of transmission and reception.
	• Simple I^2C mode		
	SSCL1, SSCL5, SSCL6	I/O	Input/output pins for the I^2C clock.
	SSDA1, SSDA5, SSDA6	I/O	Input/output pins for the I^2C data.

Table 1.4 Pin Functions (2/3)

Classifications	Pin Name	I/O	Description
Serial communications interface (SCIg)	• Simple SPI mode		
	SCK1, SCK5, SCK6	I/O	Input/output pins for the clock.
	SMISO1, SMISO5, SMISO6	I/O	Input/output pins for slave transmit data.
	SMOSI1, SMOSI5, SMOSI6	I/O	Input/output pins for master transmit data.
	SS1#, SS5#, SS6#	Input	Slave-select input pins.
Serial communications interface (SCIh)	• Asynchronous mode/clock synchronous mode		
	SCK12	I/O	Input/output pin for the clock.
	RXD12	Input	Input pin for receiving data.
	TXD12	Output	Output pin for transmitting data.
	CTS12#	Input	Input pin for controlling the start of transmission and reception.
	RTS12#	Output	Output pin for controlling the start of transmission and reception.
	• Simple I^2C mode		
	SSCL12	I/O	Input/output pin for the I^2C clock.
	SSDA12	I/O	Input/output pin for the I^2C data.
	• Simple SPI mode		
	SCK12	I/O	Input/output pin for the clock.
	SMISO12	I/O	Input/output pin for slave transmit data.
	SMOSI12	I/O	Input/output pin for master transmit data.
	SS12#	Input	Slave-select input pin.
	• Extended serial mode		
	RXDX12	Input	Input pin for data reception by SCIh.
	TXDX12	Output	Output pin for data transmission by SCIh.
	SIOX12	I/O	Input/output pin for data reception or transmission by SCIh.
I^2C bus interface	SCL	I/O	Input/output pin for I^2C bus interface clocks. Bus can be directly driven by the N-channel open drain output.
	SDA	I/O	Input/output pin for I^2C bus interface data. Bus can be directly driven by the N-channel open drain output.
Serial peripheral interface	RSPCKA	I/O	Input/output pin for the RSPI clock.
	MOSIA	I/O	Input/output pin for transmitting data from the RSPI master.
	MISOA	I/O	Input/output pin for transmitting data from the RSPI slave.
	SSLA0	I/O	Input/output pin to select the slave for the RSPI.
	SSLA1 to SSLA3	Output	Output pins to select the slave for the RSPI.
CAN module	CRXD0	Input	Input pin
	CTXD0	Output	Output pin
12-bit A/D converter	AN000 to AN005	Input	Analog input pins for the 12-bit A/D converter.
	ADTRG0#	Input	Input pin for the external trigger signal that start the A/D conversion.
Analog front end	REF0P, REF1P	Input	Positive input pins of the reference voltage for the 24-bit delta-sigma A/D converter.
	REF0N, REF1N	Input	Negative input pins of the reference voltage for the 24-bit delta-sigma A/D converter.
	REFOUT	Output	Internal reference voltage output pin. Connect this to AVSS0 via a capacitor (0.47 μF) for stabilizing the internal reference voltage. Place the capacitor close to the pin.
	IEXC0 to IEXC3	Output	Excitation current source output pins.
	AIN0 to AIN11	I/O	Analog input/output pins.
	LSW	Output	Low-side-switch output pin.

Table 1.4 Pin Functions (3/3)

Classifications	Pin Name	I/O	Description
Analog power supply	AVCC0	Input	Analog voltage supply pin. Connect this pin to VCC when not using.
	AVSS0	Input	Analog ground pin. Connect this pin to VSS when not using.
	VREFH0	Input	Analog reference voltage supply pin for the 12-bit A/D converter.
	VREFL0	Input	Analog reference ground pin for the 12-bit A/D converter.
I/O ports	P14 to P17	I/O	4-bit input/output pins.
	P26, P27	I/O	2-bit input/output pins.
	P30, P31, P35 to P37	I/O	5-bit input/output pins (P35 input pin).
	PB0, PB1	I/O	2-bit input/output pins.
	PC4 to PC7	I/O	4-bit input/output pins.
	PH0 to PH3	I/O	4-bit input/output pins.

1.5 Pin Assignments

1.5.1 48-Pin LFQFP

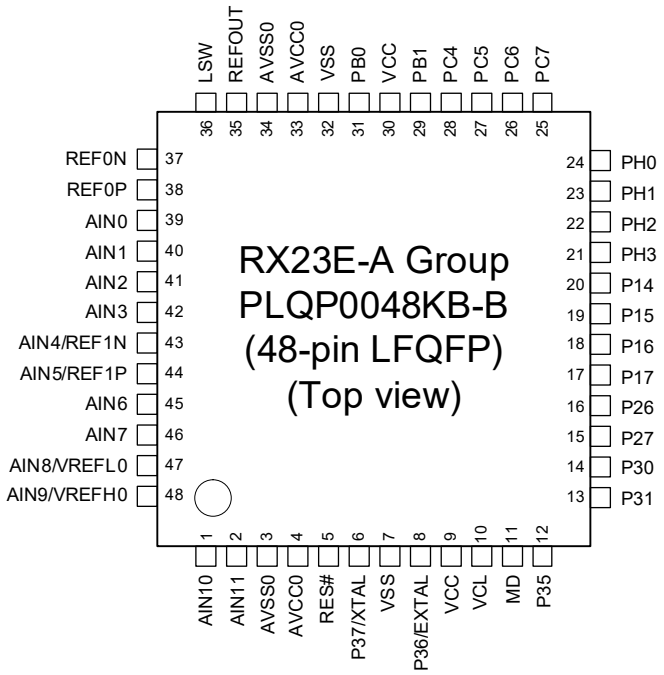

Note: This figure indicates the power supply pins and I/O port pins.
For the pin configuration, see the table “List of Pins and Pin Functions (48-Pin LFQFP)”.

Figure 1.4 Pin Assignments of the 48-Pin LFQFP

1.5.2 40-Pin HWQFN

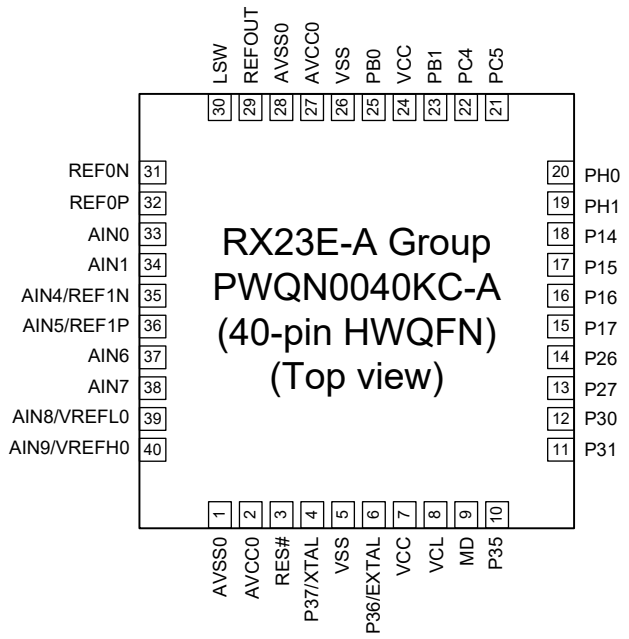

Note: This figure indicates the power supply pins and I/O port pins.
For the pin configuration, see the table “List of Pins and Pin Functions (40-Pin HWQFN)”.
Note: It is recommended that the exposed die pad of HWQFN should be connected to VSS.

Figure 1.5 Pin Assignments of the 40-Pin HWQFN

1.6 List of Pins and Pin Functions

1.6.1 48-Pin LFQFP

Table 1.5 List of Pins and Pin Functions (48-Pin LFQFP) (1/2)

Pin No.	Power Supply, Clock, System Control	I/O Port	Timers (MTU, TMR, CMT, POE, CAC)	Communications (SCIg, SCIh, RSPI, RIIC, CAN)	Analog (S12AD, VREF, IEXC, DSAD, AMUX)	Others
1					AIN10/AN004/ IEXC0 to IEXC3	
2					AIN11/AN005/ IEXC0 to IEXC3	
3	AVSS0					
4	AVCC0					
5	RES#					
6	XTAL	P37				
7	VSS					
8	EXTAL	P36				
9	VCC					
10	VCL					
11	MD					FINED
12		P35				NMI
13		P31	MTIOC1A/MTIOC4D/TMO3	CTS1#/RTS1#/SS1#		IRQ1
14		P30	MTIOC0A/MTIOC4B/TMCI3/ POE8#	RXD1/SMISO1/SSCL1		IRQ0
15		P27	MTIOC2B/MTIOC4A/TMRI3	SCK1		IRQ3
16		P26	MTIOC2A/MTIOC4C/TMO0	TXD1/SMOSI1/SSDA1		IRQ2
17		P17	MTIOC3A/MTIOC3B/TMO1/ POE8#	SCK1/MISOA/SDA		IRQ7
18		P16	MTIOC3C/MTIOC3D/TMO2	TXD1/SMOSI1/SSDA1/MOSIA/ SCL		IRQ6/ADTRG0#
19		P15	MTIOC0B/MTCLKB/TMCI2	RXD1/SMISO1/SSCL1/SSLA1/ CRXD0		IRQ5
20		P14	MTIOC3A/MTCLKA/TMRI2	CTS1#/RTS1#/SS1#/SSLA3/ CTXD0		IRQ4
21		PH3	MTIC5W/MTCLKB/TMCI0/POE2#	CTS6#/RTS6#/SS6#/RSPCKA		
22		PH2	MTIC5V/MTCLKA/TMRI0	SCK5/MOSIA		IRQ1
23		PH1	MTIC5U/MTCLKD/TMO0/POE2#	TXD5/SMOSI5/SSDA5/SSLA0		IRQ0/CLKOUT
24		PH0	MTIOC0D/MTCLKC/TMRI0/ CACREF	RXD5/SMISO5/SSCL5/SSLA2		
25		PC7	MTIOC3A/MTCLKB/TMO2/ CACREF	TXD6/SMOSI6/SSDA6/MISOA		
26		PC6	MTIOC3C/MTCLKA/TMCI2	RXD6/SMISO6/SSCL6/MOSIA		
27		PC5	MTIOC3B/MTCLKD/TMRI2	SCK5/SCK6/SCK12/RSPCKA		
28		PC4	MTIOC3D/MTCLKC/TMCI1/ POE0#	CTS5#/RTS5#/SS5#/CTS12#/ RTS12#/SS12#/SSLA0		
29		PB1	MTIOC1B/MTIOC2A/TMRI1/ POE1#	TXD12/TXDX12/SIOX12/ SMOSI12/SSDA12		
30	VCC					
31		PB0	MTIOC0C/TMCI0/POE3#	RXD12/RXDX12/SMISO12/ SSCL12		IRQ4
32	VSS					
33	AVCC0					
34	AVSS0					
35					REFOUT	
36					LSW	
37					REF0N	
38					REF0P	
39					AIN0/IEXC0 to IEXC3	
40					AIN1/IEXC0 to IEXC3	
41					AIN2/IEXC0 to IEXC3	

Table 1.5 List of Pins and Pin Functions (48-Pin LFQFP) (2/2)

Pin No.	Power Supply, Clock, System Control	I/O Port	Timers (MTU, TMR, CMT, POE, CAC)	Communications (SCIg, SCIh, RSPI, RIIC, CAN)	Analog (S12AD, VREF, IEXC, DSAD, AMUX)	Others
42					AIN3/IEXC0 to IEXC3	
43					AIN4/IEXC0 to IEXC3/REF1N	
44					AIN5/IEXC0 to IEXC3/REF1P	
45					AIN6/AN000/ IEXC0 to IEXC3	
46					AIN7/AN001/ IEXC0 to IEXC3	
47	VREFL0				AIN8/AN002/ IEXC0 to IEXC3	
48	VREFH0				AIN9/AN003/ IEXC0 to IEXC3	

1.6.2 40-Pin HWQFN

Table 1.6 List of Pins and Pin Functions (40-Pin HWQFN)

Pin No.	Power Supply, Clock, System Control	I/O Port	Timers (MTU, TMR, CMT, POE, CAC)	Communications (SCIg, SCIh, RSPI, RIIC, CAN)	Analog (S12AD, VREF, IEXC, DSAD, AMUX)	Others
1	AVSS0					
2	AVCC0					
3	RES#					
4	XTAL	P37				
5	VSS					
6	EXTAL	P36				
7	VCC					
8	VCL					
9	MD					FINED
10		P35				NMI
11		P31	MTIOC1A/MTIOC4D/TMO3	CTS1#/RTS1#/SS1#		IRQ1
12		P30	MTIOC0A/MTIOC4B/TMCI3/ POE8#	RXD1/SMISO1/SSCL1		IRQ0
13		P27	MTIOC2B/MTIOC4A/TMRI3	SCK1		IRQ3
14		P26	MTIOC2A/MTIOC4C/TMO0	TXD1/SMOSI1/SSDA1		IRQ2
15		P17	MTIOC3A/MTIOC3B/TMO1/ POE8#	SCK1/MISOA/SDA		IRQ7
16		P16	MTIOC3C/MTIOC3D/TMO2	TXD1/SMOSI1/SSDA1/MOSIA/ SCL		IRQ6/ADTRG0#
17		P15	MTIOC0B/MTCLKB/TMCI2	RXD1/SMISO1/SSCL1/SSLA1/ CRXD0		IRQ5
18		P14	MTIOC3A/MTCLKA/TMRI2	CTS1#/RTS1#/SS1#/SSLA3/ CTXD0		IRQ4
19		PH1	MTCLKD/TMO0/POE2#	TXD5/SMOSI5/SSDA5/SSLA0		IRQ0/CLKOUT
20		PH0	MTIOC0D/MTCLKC/TMRI0/ CACREF	RXD5/SMISO5/SSCL5/SSLA2		
21		PC5	MTIOC3B/MTCLKD/TMRI2	SCK5/SCK12/RSPCKA		
22		PC4	MTIOC3D/MTCLKC/TMCI1/ POE0#	CTS5#/RTS5#/SS5#/CTS12#/ RTS12#/SS12#/SSLA0		
23		PB1	MTIOC1B/MTIOC2A/TMRI1/ POE1#	TXD12/TXDX12/SIOX12/ SMOSI12/SSDA12		
24	VCC					
25		PB0	MTIOC0C/TMCI0/POE3#	RXD12/RXDX12/SMISO12/ SSCL12		IRQ4
26	VSS					
27	AVCC0					
28	AVSS0					
29					REFOUT	
30					LSW	
31					REF0N	
32					REF0P	
33					AIN0/IEXC0 to IEXC3	
34					AIN1/IEXC0 to IEXC3	
35					AIN4/IEXC0 to IEXC3/REF1N	
36					AIN5/IEXC0 to IEXC3/REF1P	
37					AIN6/AN000/ IEXC0 to IEXC3	
38					AIN7/AN001/ IEXC0 to IEXC3	
39	VREFL0				AIN8/AN002/ IEXC0 to IEXC3	
40	VREFH0				AIN9/AN003/ IEXC0 to IEXC3	

2. CPU

The RXv2 instruction set architecture (RXv2) has upward compatibility with the RXv1 instruction set architecture (RXv1).

- Adoption of variable-length instruction format
  As with RXv1, the RXv2 CPU has short formats for frequently used instructions, facilitating the development of efficient programs that take up less memory.
- Powerful instruction set
  The RXv2 supports 109 selected instructions. Moreover, DSP instructions and floating-point operation instructions are added, thus realizing high-speed arithmetic processing.
- Versatile addressing modes
  The RXv2 CPU has 11 versatile addressing modes, with register-register operations, register-memory operations, and bitwise operations included. Data transfer between memory locations is also possible.

2.1 Features

- Minimum instruction execution rate: One clock cycle
- Address space: 4-Gbyte linear addresses
- Register set of the CPU
  General purpose: Sixteen 32-bit registers
  Control: Ten 32-bit registers
  Accumulator: Two 72-bit registers
- Variable-length instruction format (lengths from one to eight bytes)
- 109 instructions/11 addressing modes
  Basic instructions: 75
  Floating-point operation instructions: 11
  DSP instructions: 23
- Processor modes
  Supervisor mode and user mode
- Vector tables
  Exception vector table and interrupt vector table
- Memory protection unit
- Data arrangement
  Selectable as little endian or big endian

2.2 Register Set of the CPU

The RXv2 CPU has sixteen general-purpose registers, ten control registers, and two accumulator used for DSP instructions.

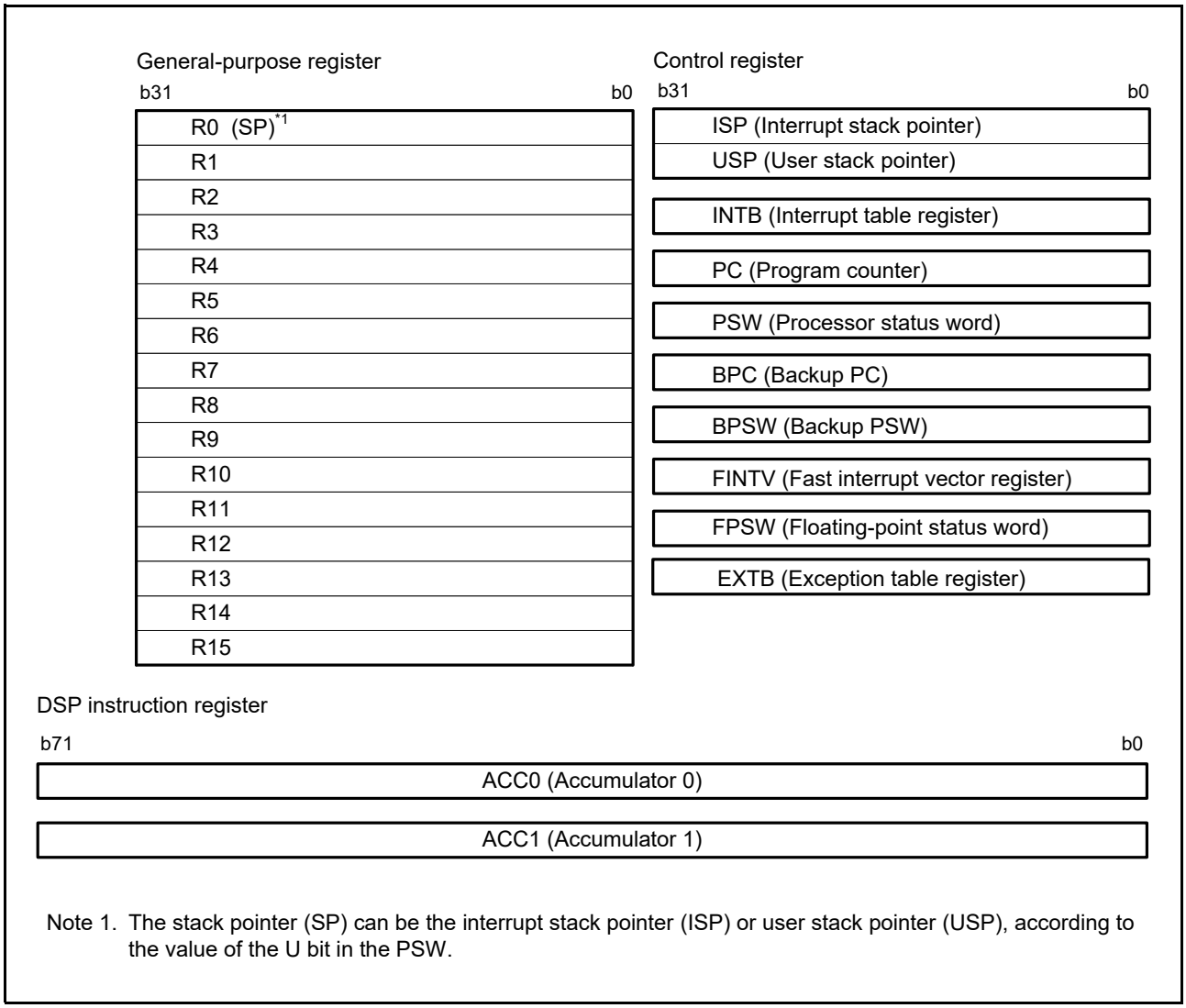

Note 1. The stack pointer (SP) can be the interrupt stack pointer (ISP) or user stack pointer (USP), according to the value of the U bit in the PSW.

Figure 2.1 Register Set of the CPU

2.2.1 General-Purpose Registers (R0 to R15)

This CPU has sixteen 32-bit general-purpose registers (R0 to R15). R0 to R15 can be used as data registers or address registers.
R0, a general-purpose register, also functions as the stack pointer (SP).
The stack pointer is switched to operate as the interrupt stack pointer (ISP) or user stack pointer (USP) by the value of the stack pointer select bit (U) in the processor status word (PSW).

2.2.2 Control Registers

This CPU has the following ten control registers.

- Interrupt stack pointer (ISP)
- User stack pointer (USP)
- Exception table register (EXTB)
- Interrupt table register (INTB)
- Program counter (PC)
- Processor status word (PSW)
- Backup PC (BPC)
- Backup PSW (BPSW)
- Fast interrupt vector register (FINTV)
- Floating-point status word (FPSW)

2.2.2.1 Interrupt Stack Pointer (ISP)/User Stack Pointer (USP)

	b31																															b0
ISP																																
Value after reset:	0	0	0	0	0	0	0	0	0	0	0	0	0	0	0	0	0	0	0	0	0	0	0	0	0	0	0	0	0	0	0	0

	b31																															b0
USP																																
Value after reset:	0	0	0	0	0	0	0	0	0	0	0	0	0	0	0	0	0	0	0	0	0	0	0	0	0	0	0	0	0	0	0	0

The stack pointer (SP) can be either of two types, the interrupt stack pointer (ISP) or the user stack pointer (USP). Whether the stack pointer operates as the ISP or USP depends on the value of the stack pointer select bit (U) in the processor status word (PSW).
Set the ISP or USP to a multiple of 4 to reduce the number of cycles required to execute interrupt sequences and instructions entailing stack manipulation.

2.2.2.2 Exception Table Register (EXTB)

	b31																															b0
Value after reset:	1	1	1	1	1	1	1	1	1	1	1	1	1	1	1	1	1	1	1	1	1	1	1	1	0	0	0	0	0	0	0	0

The exception table register (EXTB) specifies the address where the exception vector table starts.
Set the EXTB to a multiple of 4 to reduce the number of cycles required to execute interrupt sequences and instructions entailing stack manipulation.

2.2.2.3 Interrupt Table Register (INTB)

	b31																															b0
Value after reset:	Undefined																															

The interrupt table register (INTB) specifies the address where the interrupt vector table starts.
Set the INTB to a multiple of 4 to reduce the number of cycles required to execute interrupt sequences and instructions entailing stack manipulation.

2.2.2.4 Program Counter (PC)

	b31																															b0
Value after reset:	Contents of addresses FFFFFFFCh to FFFFFFFFh																															

The program counter (PC) indicates the address of the instruction being executed.

2.2.2.5 Processor Status Word (PSW)

	b31	b30	b29	b28	b27	b26	b25	b24	b23	b22	b21	b20	b19	b18	b17	b16
	—	—	—	—	IPL[3:0]				—	—	—	PM	—	—	U	I
Value after reset:	0	0	0	0	0	0	0	0	0	0	0	0	0	0	0	0

	b15	b14	b13	b12	b11	b10	b9	b8	b7	b6	b5	b4	b3	b2	b1	b0
	—	—	—	—	—	—	—	—	—	—	—	—	O	S	Z	C
Value after reset:	0	0	0	0	0	0	0	0	0	0	0	0	0	0	0	0

Bit	Symbol	Bit Name	Description	R/W
b0	C	Carry Flag	0: No carry has occurred. 1: A carry has occurred.	R/W
b1	Z	Zero Flag	0: Result is non-zero. 1: Result is 0.	R/W
b2	S	Sign Flag	0: Result is a positive value or 0. 1: Result is a negative value.	R/W
b3	O	Overflow Flag	0: No overflow has occurred. 1: An overflow has occurred.	R/W
b15 to b4	—	Reserved	These bits are read as 0. The write value should be 0.	R/W
b16	I*1	Interrupt Enable	0: Interrupt disabled. 1: Interrupt enabled.	R/W
b17	U*1	Stack Pointer Select	0: Interrupt stack pointer (ISP) is selected. 1: User stack pointer (USP) is selected.	R/W
b19, b18	—	Reserved	These bits are read as 0. The write value should be 0.	R/W
b20	PM*1, *2, *3	Processor Mode Select	0: Supervisor mode is selected. 1: User mode is selected.	R/W
b23 to b21	—	Reserved	These bits are read as 0. The write value should be 0.	R/W
b27 to b24	IPL[3:0]*1	Processor Interrupt Priority Level	b27 b24 0 0 0 0: Priority level 0 (lowest) 0 0 0 1: Priority level 1 0 0 1 0: Priority level 2 0 0 1 1: Priority level 3 0 1 0 0: Priority level 4 0 1 0 1: Priority level 5 0 1 1 0: Priority level 6 0 1 1 1: Priority level 7 1 0 0 0: Priority level 8 1 0 0 1: Priority level 9 1 0 1 0: Priority level 10 1 0 1 1: Priority level 11 1 1 0 0: Priority level 12 1 1 0 1: Priority level 13 1 1 1 0: Priority level 14 1 1 1 1: Priority level 15 (highest)	R/W
b31 to b28	—	Reserved	These bits are read as 0. The write value should be 0.	R/W

Note 1. In user mode, writing to the IPL[3:0], PM, U, and I bits by an MVTC or a POPC instruction is ignored. Writing to the IPL[3:0] bits by an MVTIPL instruction generates a privileged instruction exception.
Note 2. In supervisor mode, writing to the PM bit by an MVTC or a POPC instruction is ignored, but writing to the other bits is possible.
Note 3. Switching from supervisor mode to user mode requires execution of an RTE instruction after having set the PSW.PM bit saved on the stack to 1 or executing an RTFI instruction after having set the BPSW.PM bit to 1.

The processor status word (PSW) indicates the results of instruction execution or the state of the CPU.

C Flag (Carry Flag)

This flag retains the state of the bit after a carry, borrow, or shift-out has occurred.

Z Flag (Zero Flag)

This flag is set to 1 if the result of an operation is 0; otherwise its value is cleared to 0.

S Flag (Sign Flag)

This flag is set to 1 if the result of an operation is negative; otherwise its value is cleared to 0.

O Flag (Overflow Flag)

This flag is set to 1 if the result of an operation overflows; otherwise its value is cleared to 0.

I Bit (Interrupt Enable)

This bit enables interrupt requests. When a WAIT instruction is executed, the value of this bit becomes 1. It becomes 0 when an exception is accepted.

U Bit (Stack Pointer Select)

This bit specifies the stack pointer as either the ISP or USP. When an exception request is accepted, this bit is set to 0. When the processor mode is switched from supervisor mode to user mode, this bit is set to 1.

PM Bit (Processor Mode Select)

This bit specifies the processor mode. When an exception is accepted, the value of this bit becomes 0.

IPL[3:0] Bits (Processor Interrupt Priority Level)

The IPL[3:0] bits specify the processor interrupt priority level as one of sixteen levels from zero to fifteen, wherein priority level zero is the lowest and priority level fifteen the highest. When the priority level of a requested interrupt is higher than the processor interrupt priority level, the interrupt is enabled. Setting the IPL[3:0] bits to level fifteen (Fh) disables all interrupt requests. The IPL[3:0] bits are set to level fifteen (Fh) when a non-maskable interrupt is generated. When interrupts in general are generated, the bits are set to the priority levels of accepted interrupts.

2.2.2.6 Backup PC (BPC)

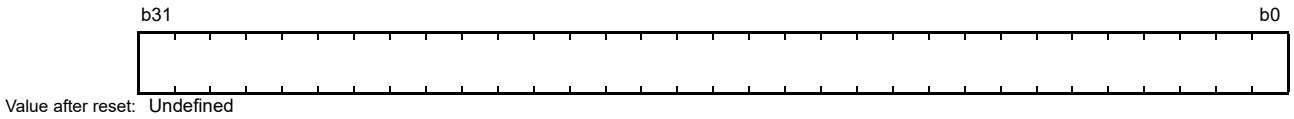

The backup PC (BPC) is provided to speed up response to interrupts.
After a fast interrupt has been generated, the contents of the program counter (PC) are saved in the BPC register.

2.2.2.7 Backup PSW (BPSW)

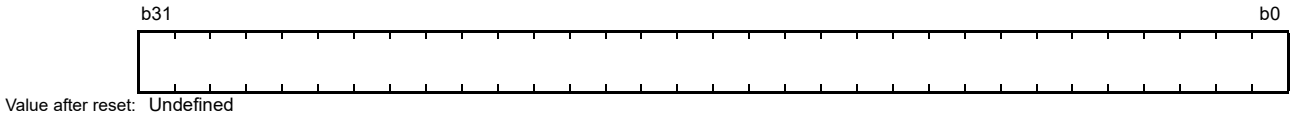

The backup PSW (BPSW) is provided to speed up response to interrupts.
After a fast interrupt has been generated, the contents of the processor status word (PSW) are saved in the BPSW. The allocation of bits in the BPSW corresponds to that in the PSW.

2.2.2.8 Fast Interrupt Vector Register (FINTV)

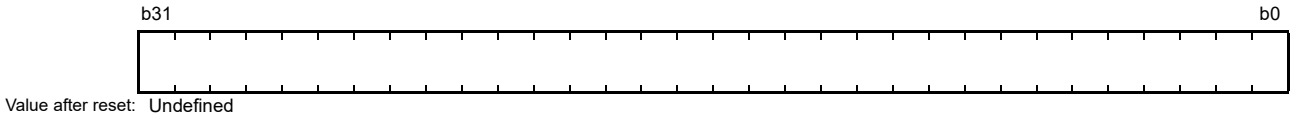

The fast interrupt vector register (FINTV) is provided to speed up response to interrupts.
The FINTV register specifies a branch destination address when a fast interrupt has been generated.

2.2.2.9 Floating-Point Status Word (FPSW)

	b31	b30	b29	b28	b27	b26	b25	b24	b23	b22	b21	b20	b19	b18	b17	b16
	FS	FX	FU	FZ	FO	FV	—	—	—	—	—	—	—	—	—	—
Value after reset:	0	0	0	0	0	0	0	0	0	0	0	0	0	0	0	0

	b15	b14	b13	b12	b11	b10	b9	b8	b7	b6	b5	b4	b3	b2	b1	b0
	—	EX	EU	EZ	EO	EV	—	DN	CE	CX	CU	CZ	CO	CV	RM[1:0]	
Value after reset:	0	0	0	0	0	0	0	1	0	0	0	0	0	0	0	0

Bit	Symbol	Bit Name	Description	R/W
b1, b0	RM[1:0]	Floating-Point Rounding-Mode Setting	b1 b0 0 0: Rounding towards the nearest value 0 1: Rounding towards 0 1 0: Rounding towards +∞ 1 1: Rounding towards –∞	R/W
b2	CV	Invalid Operation Cause Flag	0: No invalid operation has been encountered. 1: Invalid operation has been encountered.	R/(W) *1
b3	CO	Overflow Cause Flag	0: No overflow has occurred. 1: Overflow has occurred.	R/(W) *1
b4	CZ	Division-by-Zero Cause Flag	0: No division-by-zero has occurred. 1: Division-by-zero has occurred.	R/(W) *1
b5	CU	Underflow Cause Flag	0: No underflow has occurred. 1: Underflow has occurred.	R/(W) *1
b6	CX	Inexact Cause Flag	0: No inexact exception has been generated. 1: Inexact exception has been generated.	R/(W) *1
b7	CE	Unimplemented Processing Cause Flag	0: No unimplemented processing has been encountered. 1: Unimplemented process has been encountered.	R/(W) *1
b8	DN	0 Flush Bit of Denormalized Number	0: A denormalized number is handled as a denormalized number. 1: A denormalized number is handled as 0.*2	R/W
b9	—	Reserved	This bit is read as 0. The write value should be 0.	R/W
b10	EV	Invalid Operation Exception Enable	0: Invalid operation exception is masked. 1: Invalid operation exception is enabled.	R/W
b11	EO	Overflow Exception Enable	0: Overflow exception is masked. 1: Overflow exception is enabled.	R/W
b12	EZ	Division-by-Zero Exception Enable	0: Division-by-zero exception is masked. 1: Division-by-zero exception is enabled.	R/W
b13	EU	Underflow Exception Enable	0: Underflow exception is masked. 1: Underflow exception is enabled.	R/W
b14	EX	Inexact Exception Enable	0: Inexact exception is masked. 1: Inexact exception is enabled.	R/W
b25 to b15	—	Reserved	These bits are read as 0. The write value should be 0.	R/W
b26	FV*3	Invalid Operation Flag	0: No invalid operation has been encountered. 1: Invalid operation has been encountered.*8	R/W
b27	FO*4	Overflow Flag	0: No overflow has occurred. 1: Overflow has occurred.*8	R/W
b28	FZ*5	Division-by-Zero Flag	0: No division-by-zero has occurred. 1: Division-by-zero has occurred.*8	R/W
b29	FU*6	Underflow Flag	0: No underflow has occurred. 1: Underflow has occurred.*8	R/W
b30	FX*7	Inexact Flag	0: No inexact exception has been generated. 1: Inexact exception has been generated.*8	R/W

Bit	Symbol	Bit Name	Description	R/W
b31	FS	Floating-Point Error Summary Flag	This bit reflects the logical OR of the FU, FZ, FO, and FV flags.	R

Note 1. Writing 0 to the bit clears it. Writing 1 to the bit does not affect its value.
Note 2. Positive denormalized numbers are treated as +0, negative denormalized numbers as –0.
Note 3. When the EV bit is set to 0, the FV flag is enabled.
Note 4. When the EO bit is set to 0, the FO flag is enabled.
Note 5. When the EZ bit is set to 0, the FZ flag is enabled.
Note 6. When the EU bit is set to 0, the FU flag is enabled.
Note 7. When the EX bit is set to 0, the FX flag is enabled.
Note 8. Once the bit has been set to 1, this value is retained until it is cleared to 0 by software.

The floating-point status word (FPSW) indicates the results of floating-point operations.
When an exception handling enable bit (Ej) enables the exception handling (Ej = 1), the exception cause can be identified by checking the corresponding Cj flag in the exception handling routine. If the exception handling is masked (Ej = 0), the occurrence of exception can be checked by reading the Fj flag at the end of a series of processing. Once the Fj flag has been set to 1, this value is retained until it is cleared to 0 by software (j = X, U, Z, O, or V).

RM[1:0] Bits (Floating-Point Rounding-Mode Setting)

These bits specify the floating-point rounding-mode.

Explanation of Floating-Point Rounding Modes

- Rounding towards the nearest value (the default behavior) : An inexact result is rounded to the available value that is closest to the result which would be obtained with an infinite number of digits. If two available values are equally close, rounding is to the even alternative.
- Rounding towards 0 : An inexact result is rounded to the smallest available absolute value, i.e. in the direction of zero (simple truncation).
- Rounding towards +∞ : An inexact result is rounded to the nearest available value in the direction of positive infinity.
- Rounding towards –∞ : An inexact result is rounded to the nearest available value in the direction of negative infinity.

(1) Rounding to the nearest value is specified as the default mode and returns the most accurate value.
(2) Modes such as rounding towards 0, rounding towards +∞, and rounding towards –∞ are used to ensure precision when interval arithmetic is employed.

CV Flag (Invalid Operation Cause Flag), CO Flag (Overflow Cause Flag), CZ Flag (Division-by-Zero Cause Flag), CU Flag (Underflow Cause Flag), CX Flag (Inexact Cause Flag), and CE Flag (Unimplemented Processing Cause Flag)

Floating-point exceptions include the five specified in the IEEE754 standard, namely overflow, underflow, inexact, division-by-zero, and invalid operation. For a further floating-point exception that is generated upon detection of unimplemented processing, the corresponding flag (CE) is set to 1.

- The bit that has been set to 1 is cleared to 0 when the FPU instruction is executed.
- When 0 is written to the bit by the MVTC and POPC instructions, the bit is set to 0; the bit retains the previous value when 1 is written by the instruction.

DN Bit (0 Flush Bit of Denormalized Number)

When this bit is set to 0, a denormalized number is handled as a denormalized number. When this bit is set to 1, a denormalized number is handled as 0.

EV Bit (Invalid Operation Exception Enable), EO Bit (Overflow Exception Enable), EZ Bit (Division-by-Zero Exception Enable), EU Bit (Underflow Exception Enable), and EX Bit (Inexact Exception Enable)

When any of five floating-point exceptions specified in the IEEE754 standard is generated by the floating-point

operation instruction, the bit decides whether the CPU will start handling the exception. When the bit is set to 0, the exception handling is masked; when the bit is set to 1, the exception handling is enabled.

FV Flag (Invalid Operation Flag), FO Flag (Overflow Flag), FZ Flag (Division-by-Zero Flag), FU Flag (Underflow Flag), and FX Flag (Inexact Flag)

While the exception handling enable bit (Ej) is 0 (exception handling is masked), if any of five floating-point exceptions specified in the IEEE754 standard is generated, the corresponding bit is set to 1.

- When Ej is 1 (exception handling is enabled), the value of the flag remains.
- When the corresponding flag is set to 1, it remains 1 until it is cleared to 0 by software. (accumulation flag)

FS Flag (Floating-Point Error Summary Flag)

This bit reflects the logical OR of the FU, FZ, FO, and FV flags.

2.2.3 Accumulator

The accumulator (ACC0 or ACC1) is a 72-bit register used for DSP instructions. The accumulator is handled as a 96-bit register for reading and writing. At this time, when bits 95 to 72 of the accumulator are read, the value where the value of bit 71 is sign extended is read. Writing to bits 95 to 72 of the accumulator is ignored. ACC0 is also used for the multiply and multiply-and-accumulate instructions; EMUL, EMULU, FMUL, MUL, and RMPA, in which case the prior value in ACC0 is modified by execution of the instruction.

Use the MVTACGU, MVTACHI, and MVTACLO instructions for writing to the accumulator. The MVTACGU, MVTACHI, and MVTACLO instructions write data to bits 95 to 64, the higher-order 32 bits (bits 63 to 32), and the lower-order 32 bits (bits 31 to 0), respectively.

Use the MVFACGU, MVFACHI, MVFACMI, and MVFACLO instructions for reading data from the accumulator. The MVFACGU, MVFACHI, MVFACMI, and MVFACLO instructions read data from the guard bits (bits 95 to 64), higher-order 32 bits (bits 63 to 32), the middle 32 bits (bits 47 to 16), and the lower-order 32 bits (bits 31 to 0), respectively.

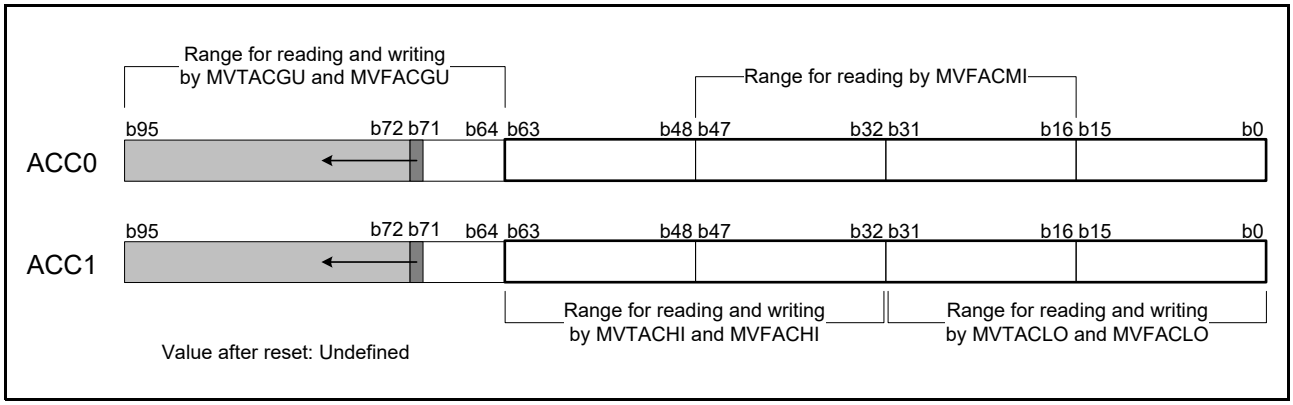

Note: The value of bit 71 is sign extended for bits 95 to 72 and the extended value is always read. Writing to this area is ignored.

2.3 Processor Mode

The RXv2 CPU supports two processor modes, supervisor and user. These processor modes and the memory protection function enable the realization of a hierarchical CPU resource protection and memory protection mechanism. Each processor mode imposes a level on rights of access to memory and the instructions that can be executed. Supervisor mode carries greater rights than user mode. The initial state after a reset is supervisor mode.

2.3.1 Supervisor Mode

In supervisor mode, all CPU resources are accessible and all instructions are available. However, writing to the processor mode select bit (PM) in the processor status word (PSW) by executing an MVTC or a POPC instruction will be ignored. For details on how to write to the PM bit, refer to section 2.2.2.5, Processor Status Word (PSW).

2.3.2 User Mode

In user mode, write access to the CPU resources listed below is restricted. The restriction applies to any instruction capable of write access.

- Some bits (bits IPL[3:0], PM, U, and I) in the processor status word (PSW)
- Interrupt stack pointer (ISP)
- Exception table register (EXTB)
- Interrupt table register (INTB)
- Backup PSW (BPSW)
- Backup PC (BPC)
- Fast interrupt vector register (FINTV)

2.3.3 Privileged Instruction

Privileged instructions can only be executed in supervisor mode. Executing a privileged instruction in user mode produces a privileged instruction exception. Privileged instructions include the RTFI, MVTIPL, RTE, and WAIT instructions.

2.3.4 Switching Between Processor Modes

Manipulating the processor mode select bit (PM) in the processor status word (PSW) switches the processor mode. However, rewriting to the PM bit by executing an MVTC or a POPC instruction is prohibited. Switch the processor mode by following the procedures described below.

(1) Switching from user mode to supervisor mode

After an exception has been generated, the PSW.PM bit is set to 0 and the CPU switches to supervisor mode. The hardware pre-processing is executed in supervisor mode. The state of the processor mode before the exception was generated is retained in the copy of PSW.PM bit is saved on the stack.

(2) Switching from supervisor mode to user mode

Executing an RTE instruction when the value of the copy of the PSW.PM bit that has been preserved on the stack is 1 or an RTFI instruction when the value of the copy of the PSW.PM bit that has been preserved in the backup PSW (BPSW) is 1 causes a transition to user mode. In the transition to user mode, the value of the stack pointer designation bit (the U bit in the PSW) becomes 1.

2.4 Data Types

The RXv2 CPU can handle four types of data: integer, floating-point, bit, and string.
For details, refer to RX Family RXv2 Instruction Set Architecture User's Manual: Software.

2.4.1 Integer

An integer can be signed or unsigned. For signed integers, negative values are represented by two's complements.

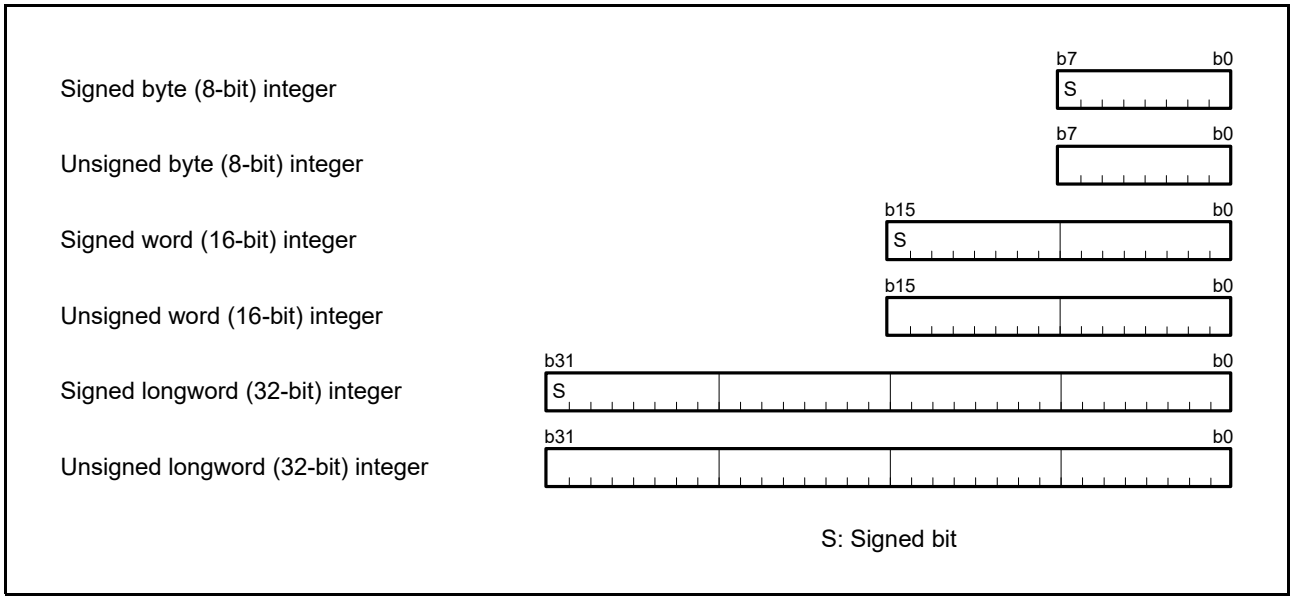

Figure 2.2 Integer

2.4.2 Floating-Points

Floating-point support is for the single-precision floating-point type specified in the IEEE754 standard; operands of this type can be used in eleven floating-point operation instructions: FADD, FCMP, FDIV, FMUL, FSQRT, FSUB, FTOI, FTOU, ITOF, ROUND, and UTOF.

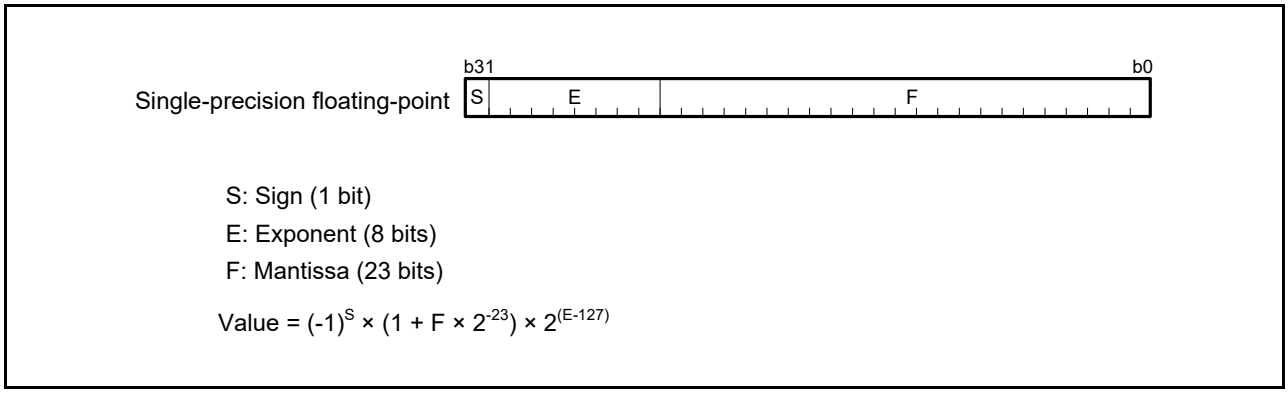

Figure 2.3 Floating-Point

The floating-point format supports the values listed below.

$0 < E < 255$ (normal numbers)

$E = 0$ and $F = 0$ (signed zero)

$E = 0$ and $F > 0$ (denormalized numbers)*1

$E = 255$ and $F = 0$ (infinity)

$E = 255$ and $F > 0$ (NaN: Not-a-Number)

Note 1. The number is treated as 0 when the FPSW.DN bit is 1. When the DN bit is 0, an unimplemented processing exception is generated.

2.4.3 Bitwise Operations

Five bit-manipulation instructions are provided for bitwise operations: BCLR, BMCnd, BNOT, BSET, and BTST.
A bit in a register is specified as the destination register and a bit number in the range from 31 to 0.
A bit in memory is specified as the destination address and a bit number from 7 to 0. The addressing modes available to specify addresses are register indirect and register relative.

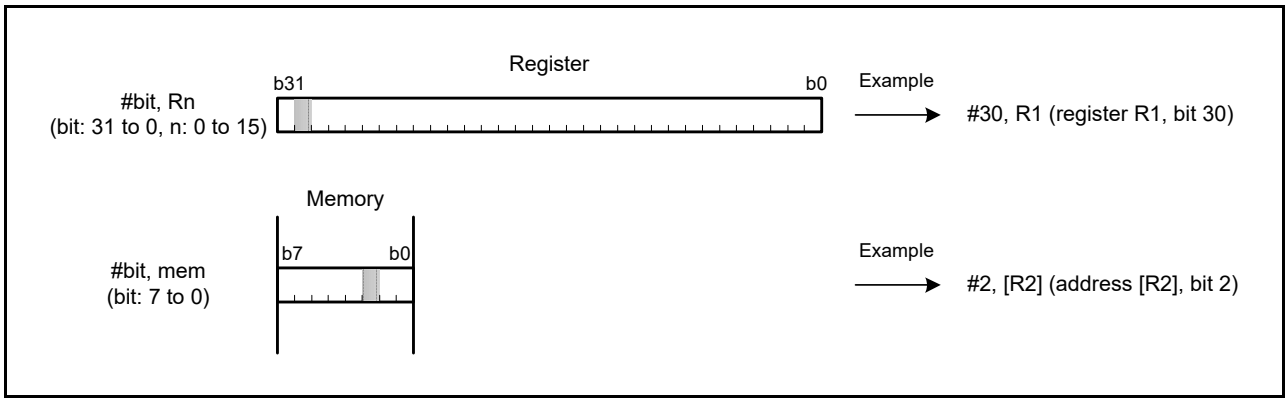

Figure 2.4 Bit

2.4.4 Strings

The string data type consists of an arbitrary number of consecutive byte (8-bit), word (16-bit), or longword (32-bit) units. Seven string manipulation instructions are provided for use with strings: SCMPU, SMOVB, SMOVF, SMOVU, SSTR, SUNTIL, and SWHILE.

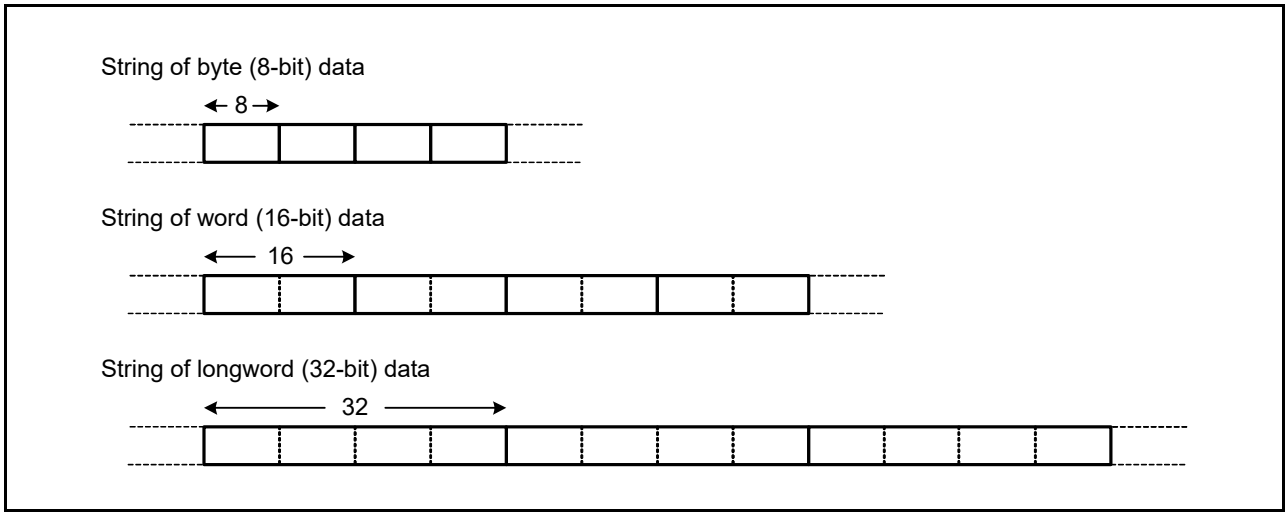

Figure 2.5 String

2.5 Endian

For the RXv2 CPU, instructions are little endian, but the treatment of data is selectable as little or big endian.

2.5.1 Switching the Endian

As arrangements of bytes, this MCU supports both big endian, where the higher-order byte (MSB) is at location 0, and little endian, where the lower-order byte (LSB) is at location 0.
For details on the endian setting, see section 3, Operating Modes.
Operations for access differ according to the endian setting and, depending on the instruction, whether 8-, 16- or 32-bit access has been selected. Operations for access in the various possible cases are described in Table 2.1 to Table 2.12.
In the tables,

LL indicates bits D7 to D0 of the general-purpose register,
LH indicates bits D15 to D8 of the general-purpose register,
HL indicates bits D23 to D16 of the general-purpose register, and
HH indicates bits D31 to D24 of the general-purpose register.

	D31 to D24	D23 to D16	D15 to D8	D7 to D0
General purpose register: Rm	HH	HL	LH	LL

Table 2.1 32-Bit Read Operations when Little Endian has been Selected

Operation / Address of src	Reading a 32-bit unit from address 0	Reading a 32-bit unit from address 1	Reading a 32-bit unit from address 2	Reading a 32-bit unit from address 3	Reading a 32-bit unit from address 4
Address 0	Transfer to LL	—	—	—	—
Address 1	Transfer to LH	Transfer to LL	—	—	—
Address 2	Transfer to HL	Transfer to LH	Transfer to LL	—	—
Address 3	Transfer to HH	Transfer to HL	Transfer to LH	Transfer to LL	—
Address 4	—	Transfer to HH	Transfer to HL	Transfer to LH	Transfer to LL
Address 5	—	—	Transfer to HH	Transfer to HL	Transfer to LH
Address 6	—	—	—	Transfer to HH	Transfer to HL
Address 7	—	—	—	—	Transfer to HH

Table 2.2 32-Bit Read Operations when Big Endian has been Selected

Operation / Address of src	Reading a 32-bit unit from address 0	Reading a 32-bit unit from address 1	Reading a 32-bit unit from address 2	Reading a 32-bit unit from address 3	Reading a 32-bit unit from address 4
Address 0	Transfer to HH	—	—	—	—
Address 1	Transfer to HL	Transfer to HH	—	—	—
Address 2	Transfer to LH	Transfer to HL	Transfer to HH	—	—
Address 3	Transfer to LL	Transfer to LH	Transfer to HL	Transfer to HH	—
Address 4	—	Transfer to LL	Transfer to LH	Transfer to HL	Transfer to HH
Address 5	—	—	Transfer to LL	Transfer to LH	Transfer to HL
Address 6	—	—	—	Transfer to LL	Transfer to LH
Address 7	—	—	—	—	Transfer to LL

Table 2.3 32-Bit Write Operations when Little Endian has been Selected

Operation / Address of dest	Writing a 32-bit unit to address 0	Writing a 32-bit unit to address 1	Writing a 32-bit unit to address 2	Writing a 32-bit unit to address 3	Writing a 32-bit unit to address 4
Address 0	Transfer from LL	—	—	—	—
Address 1	Transfer from LH	Transfer from LL	—	—	—
Address 2	Transfer from HL	Transfer from LH	Transfer from LL	—	—
Address 3	Transfer from HH	Transfer from HL	Transfer from LH	Transfer from LL	—
Address 4	—	Transfer from HH	Transfer from HL	Transfer from LH	Transfer from LL
Address 5	—	—	Transfer from HH	Transfer from HL	Transfer from LH
Address 6	—	—	—	Transfer from HH	Transfer from HL
Address 7	—	—	—	—	Transfer from HH

Table 2.4 32-Bit Write Operations when Big Endian has been Selected

Operation / Address of dest	Writing a 32-bit unit to address 0	Writing a 32-bit unit to address 1	Writing a 32-bit unit to address 2	Writing a 32-bit unit to address 3	Writing a 32-bit unit to address 4
Address 0	Transfer from HH	—	—	—	—
Address 1	Transfer from HL	Transfer from HH	—	—	—
Address 2	Transfer from LH	Transfer from HL	Transfer from HH	—	—
Address 3	Transfer from LL	Transfer from LH	Transfer from HL	Transfer from HH	—
Address 4	—	Transfer from LL	Transfer from LH	Transfer from HL	Transfer from HH
Address 5	—	—	Transfer from LL	Transfer from LH	Transfer from HL
Address 6	—	—	—	Transfer from LL	Transfer from LH
Address 7	—	—	—	—	Transfer from LL

Table 2.5 16-Bit Read Operations when Little Endian has been Selected

Operation / Address of src	Reading a 16-bit unit from address 0	Reading a 16-bit unit from address 1	Reading a 16-bit unit from address 2	Reading a 16-bit unit from address 3	Reading a 16-bit unit from address 4	Reading a 16-bit unit from address 5	Reading a 16-bit unit from address 6
Address 0	Transfer to LL	—	—	—	—	—	—
Address 1	Transfer to LH	Transfer to LL	—	—	—	—	—
Address 2	—	Transfer to LH	Transfer to LL	—	—	—	—
Address 3	—	—	Transfer to LH	Transfer to LL	—	—	—
Address 4	—	—	—	Transfer to LH	Transfer to LL	—	—
Address 5	—	—	—	—	Transfer to LH	Transfer to LL	—
Address 6	—	—	—	—	—	Transfer to LH	Transfer to LL
Address 7	—	—	—	—	—	—	Transfer to LH

Table 2.6 16-Bit Read Operations when Big Endian has been Selected

Operation / Address of src	Reading a 16-bit unit from address 0	Reading a 16-bit unit from address 1	Reading a 16-bit unit from address 2	Reading a 16-bit unit from address 3	Reading a 16-bit unit from address 4	Reading a 16-bit unit from address 5	Reading a 16-bit unit from address 6
Address 0	Transfer to LH	—	—	—	—	—	—
Address 1	Transfer to LL	Transfer to LH	—	—	—	—	—
Address 2	—	Transfer to LL	Transfer to LH	—	—	—	—
Address 3	—	—	Transfer to LL	Transfer to LH	—	—	—
Address 4	—	—	—	Transfer to LL	Transfer to LH	—	—
Address 5	—	—	—	—	Transfer to LL	Transfer to LH	—
Address 6	—	—	—	—	—	Transfer to LL	Transfer to LH
Address 7	—	—	—	—	—	—	Transfer to LL

Table 2.7 16-Bit Write Operations when Little Endian has been Selected

Operation / Address of dest	Writing a 16-bit unit to address 0	Writing a 16-bit unit to address 1	Writing a 16-bit unit to address 2	Writing a 16-bit unit to address 3	Writing a 16-bit unit to address 4	Writing a 16-bit unit to address 5	Writing a 16-bit unit to address 6
Address 0	Transfer from LL	—	—	—	—	—	—
Address 1	Transfer from LH	Transfer from LL	—	—	—	—	—
Address 2	—	Transfer from LH	Transfer from LL	—	—	—	—
Address 3	—	—	Transfer from LH	Transfer from LL	—	—	—
Address 4	—	—	—	Transfer from LH	Transfer from LL	—	—
Address 5	—	—	—	—	Transfer from LH	Transfer from LL	—
Address 6	—	—	—	—	—	Transfer from LH	Transfer from LL
Address 7	—	—	—	—	—	—	Transfer from LH

Table 2.8 16-Bit Write Operations when Big Endian has been Selected

Operation / Address of dest	Writing a 16-bit unit to address 0	Writing a 16-bit unit to address 1	Writing a 16-bit unit to address 2	Writing a 16-bit unit to address 3	Writing a 16-bit unit to address 4	Writing a 16-bit unit to address 5	Writing a 16-bit unit to address 6
Address 0	Transfer from LH	—	—	—	—	—	—
Address 1	Transfer from LL	Transfer from LH	—	—	—	—	—
Address 2	—	Transfer from LL	Transfer from LH	—	—	—	—
Address 3	—	—	Transfer from LL	Transfer from LH	—	—	—
Address 4	—	—	—	Transfer from LL	Transfer from LH	—	—
Address 5	—	—	—	—	Transfer from LL	Transfer from LH	—
Address 6	—	—	—	—	—	Transfer from LL	Transfer from LH
Address 7	—	—	—	—	—	—	Transfer from LL

Table 2.9 8-Bit Read Operations when Little Endian has been Selected

Operation / Address of src	Reading an 8-bit unit from address 0	Reading an 8-bit unit from address 1	Reading an 8-bit unit from address 2	Reading an 8-bit unit from address 3
Address 0	Transfer to LL	—	—	—
Address 1	—	Transfer to LL	—	—
Address 2	—	—	Transfer to LL	—
Address 3	—	—	—	Transfer to LL

Table 2.10 8-Bit Read Operations when Big Endian has been Selected

Operation / Address of src	Reading an 8-bit unit from address 0	Reading an 8-bit unit from address 1	Reading an 8-bit unit from address 2	Reading an 8-bit unit from address 3
Address 0	Transfer to LL	—	—	—
Address 1	—	Transfer to LL	—	—
Address 2	—	—	Transfer to LL	—
Address 3	—	—	—	Transfer to LL

Table 2.11 8-Bit Write Operations when Little Endian has been Selected

Operation / Address of dest	Writing an 8-bit unit to address 0	Writing an 8-bit unit to address 1	Writing an 8-bit unit to address 2	Writing an 8-bit unit to address 3
Address 0	Transfer from LL	—	—	—
Address 1	—	Transfer from LL	—	—
Address 2	—	—	Transfer from LL	—
Address 3	—	—	—	Transfer from LL

Table 2.12 8-Bit Write Operations when Big Endian has been Selected

Operation / Address of dest	Writing an 8-bit unit to address 0	Writing an 8-bit unit to address 1	Writing an 8-bit unit to address 2	Writing an 8-bit unit to address 3
Address 0	Transfer from LL	—	—	—
Address 1	—	Transfer from LL	—	—
Address 2	—	—	Transfer from LL	—
Address 3	—	—	—	Transfer from LL

2.5.2 Access to I/O Registers

The addresses of I/O registers are fixed, and this is regardless of whether the setting is for little endian or big endian. Accordingly, changes to the endian do not affect access to I/O registers. For the arrangements of I/O registers, refer to the descriptions of registers in the relevant sections.

2.5.3 Notes on Access to I/O Registers

Ensure that access to I/O registers is in accord with the following rules.

- With I/O registers for which a bus width of eight bits is indicated, use instructions having operands of the same width (eight bits). That is, access these registers by using instructions with .B as the size specifier (.size), or with .B or .UB as the size-extension specifier (.memex).
- With I/O registers for which a bus width of 16 bits is indicated, use instructions having operands of the same width (16 bits). That is, access these registers by using instructions with .W as the size specifier (.size), or with .W or .UW as the size-extension specifier (.memex).
- With I/O registers for which a bus width of 32 bits is indicated, use instructions having operands of the same width (32 bits). That is, access these registers by using instructions with .L as the size specifier (.size), or with .L size-extension specifier (.memex).

2.5.4 Data Arrangement

2.5.4.1 Data Arrangement in Registers

Figure 2.6 shows the relation between the sizes of registers and bit numbers.

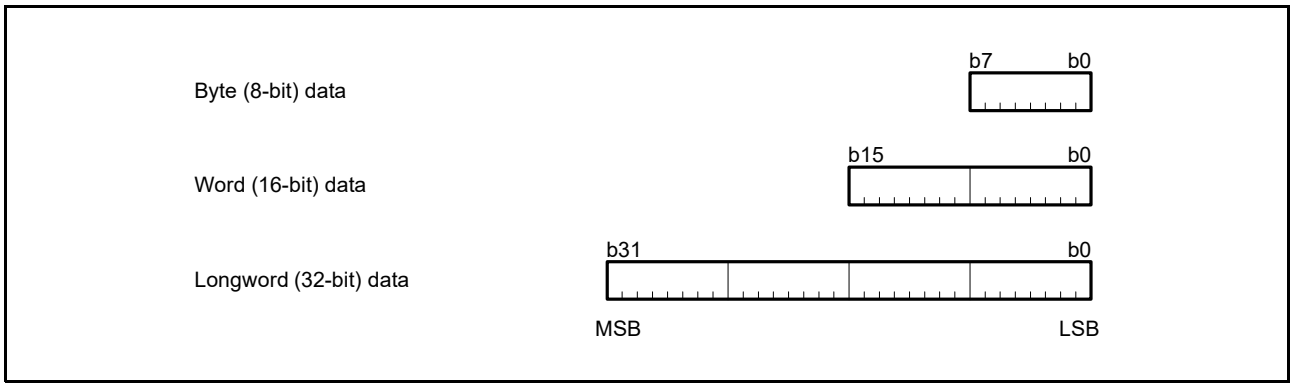

Figure 2.6 Data Arrangement in Registers

2.5.4.2 Data Arrangement in Memory

Data in memory have three sizes: byte (8-bit), word (16-bit), and longword (32-bit). The data arrangement is selectable as little endian or big endian. Figure 2.7 shows the arrangement of data in memory.

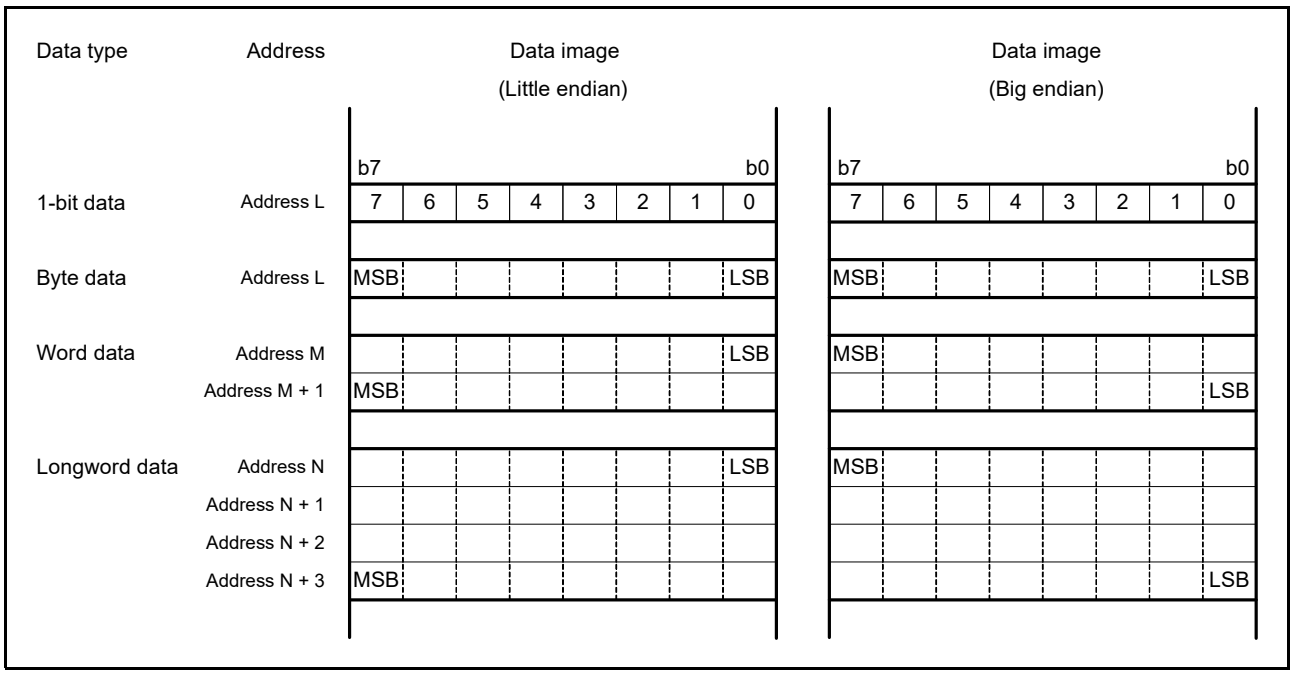

Figure 2.7 Data Arrangement in Memory

2.5.5 Notes on the Allocation of Instruction Codes

The allocation of instruction codes to an external space where the endian differs from that of the chip is prohibited. If the instruction codes are allocated to the external space, they must be allocated to areas where the endian setting is the same as that for the chip.

2.6 Vector Table

There are two types of vector table: exception and interrupt. Each vector in the vector table consists of four bytes and specifies the address where the corresponding exception handling routine starts.

2.6.1 Exception Vector Table

In the exception vector table, the individual vectors for the privileged instruction exception, access exception, undefined instruction exception, floating-point exception, and non-maskable interrupt are allocated to the 124-byte area where the value indicated by the exception table register (EXTB) is used as the starting address (ExtBase). The reset vector is always allocated to FFFFFFFCh, regardless of the value of the exception vector table.
Figure 2.8 shows the exception vector table.

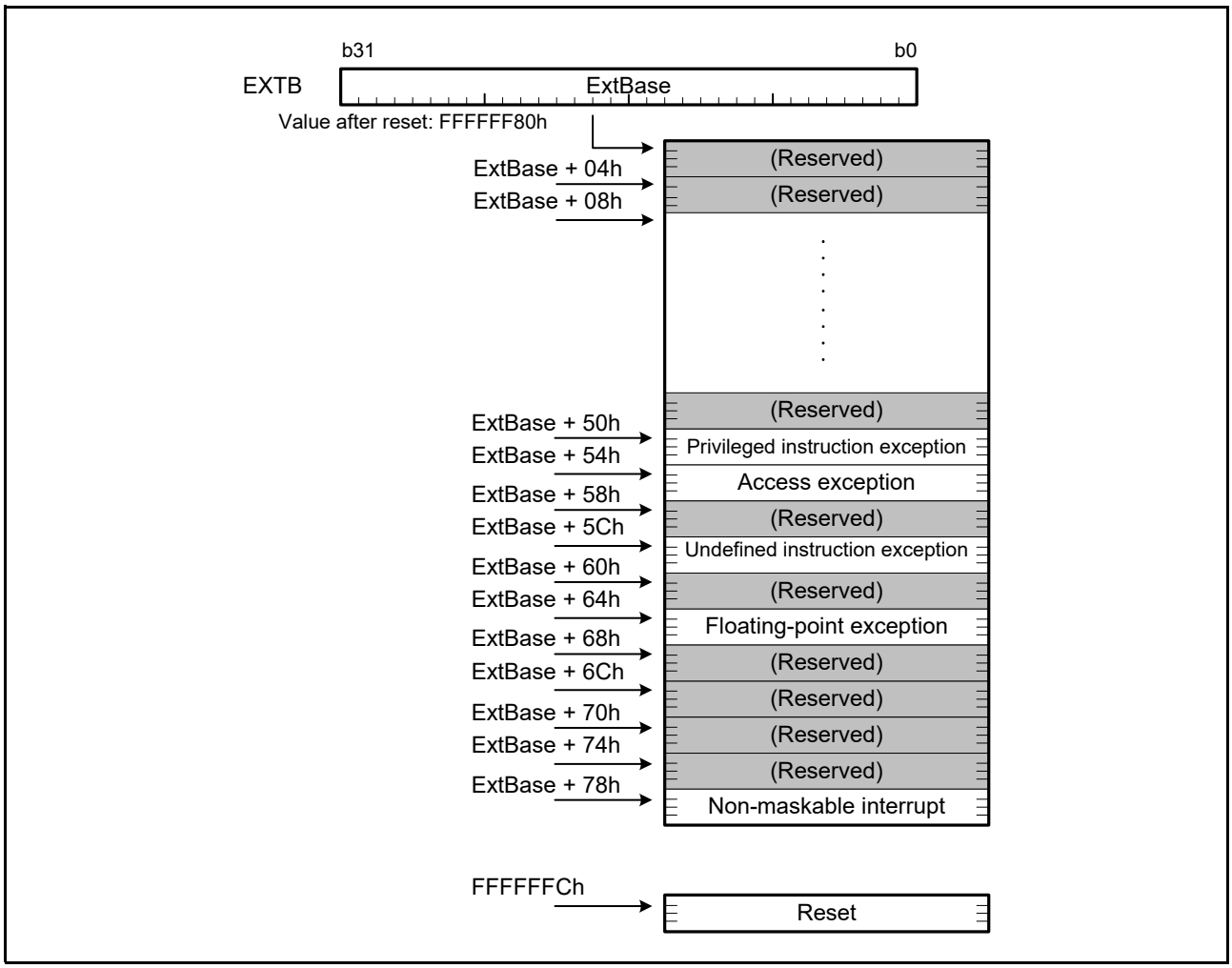

Figure 2.8 Exception Vector Table

2.6.2 Interrupt Vector Table

The address where the interrupt vector table is placed can be adjusted. The table is a 1,024-byte region that contains all vectors for unconditional traps and interrupts and starts at the address (IntBase) specified in the interrupt table register (INTB). Figure 2.9 shows the interrupt vector table.

Each vector in the interrupt vector table has a vector number from 0 to 255. Each of the INT instructions, which act as the sources of unconditional traps, is allocated to the vector that has the same number as is specified as the operand of the instruction itself (from 0 to 255). The BRK instruction is allocated to the vector with number 0. Furthermore, vector numbers (from 0 to 255) are allocated to interrupt requests in a fixed way for each product. For more on interrupt vector numbers, see section 14.3.1, Interrupt Vector Table.

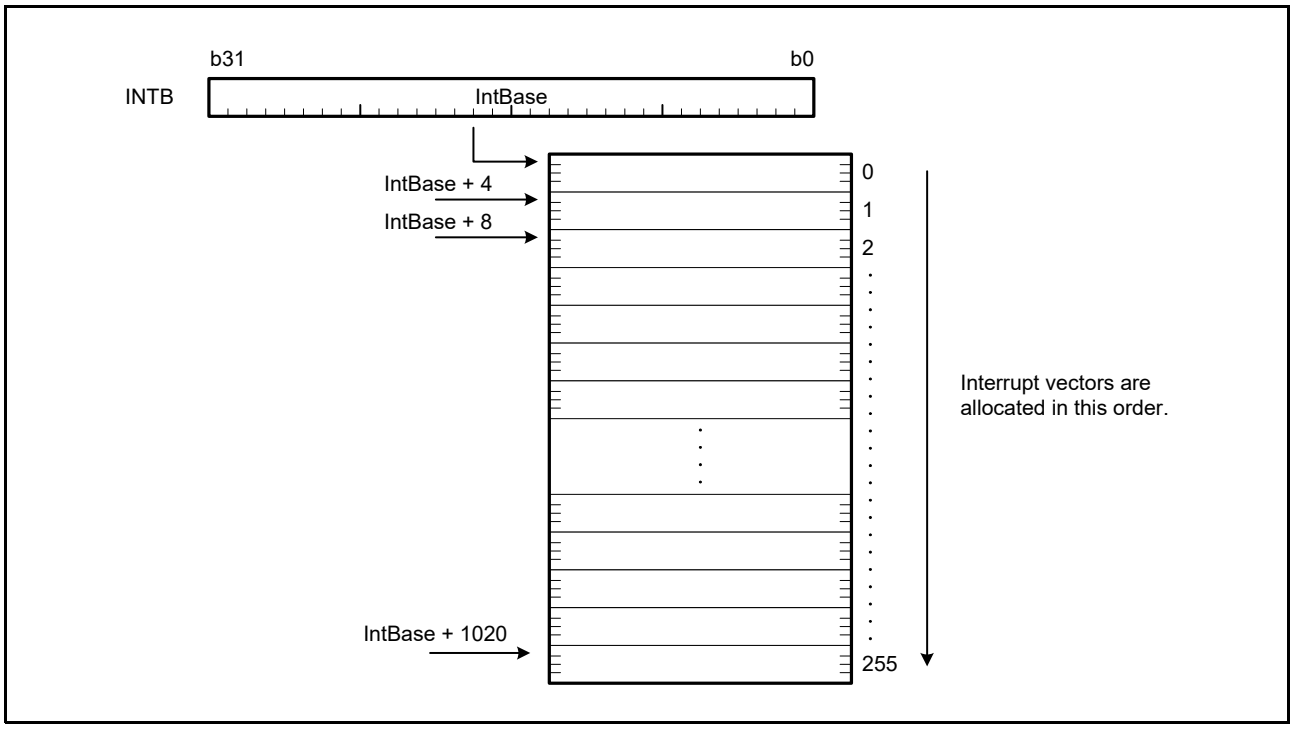

Figure 2.9 Interrupt Vector Table

2.7 Operation of Instructions

2.7.1 Restrictions on RMPA and String-Manipulation Instructions

2.7.1.1 Transfer Size and Data Prefetching

The RMPA instruction and the string-manipulation instructions (SCMPU, SMOVB, SMOVF, SMOVU, SSTR, SUNTIL, and SWHILE instructions) transfer data in longword units to speed up the reading of data from and writing of data to the memory. If the last of the data to be processed is less than a longword, data transfer proceeds with the sizes described below:

- RMPA, SSTR, SUNTIL, and SWHILE instructions: Size specified by the size specifier
- SCMPU, SMOVB, SMOVF, and SMOVU instructions: Byte

Additionally, in the above processing, the RMPA instruction and the string-manipulation instructions other than the SSTR instruction (that is, the SCMPU, SMOVB, SMOVF, SMOVU, SUNTIL, and SWHILE instructions) prefetch data when reading data from the memory. Data is prefetched from the prefetching start position with three bytes as the upper limit. The prefetching start positions of each operation are shown below.

- RMPA instruction: The multiplicand address specified by R1, and the multiplier address specified by R2
- SCMPU instruction: The source address specified by R1 for comparison, and the destination address specified by R2 for comparison
- SUNTIL and SWHILE instructions: The destination address specified by R1 for comparison
- SMOVB, SMOVF, and SMOVU instructions: The source address specified by R2 for transfer

2.7.1.2 Access to I/O Registers

The allocation of data to be handled by RMPA or string-manipulation instructions (SCMPU, SMOVB, SMOVF, SMOVU, SSTR, SUNTIL, and SWHILE instructions) to I/O registers is prohibited, and operation is not guaranteed if this restriction is not observed.

2.8 Number of Cycles

2.8.1 Instruction and Number of Cycle

Table 2.13 to Table 2.20 show the number of cycles in operation of each instruction. The listed numbers of cycles for access to memory are the numbers of cycles during no-wait access. The operands in the table below indicate the following meanings.

#IMM: Immediate
flag: bit, flag
Rs, Rs2, Rd, Rd2, Ri, Rb: General-purpose register
As, Ad: Accumulator
CR: Control register
dsp: displacement
pcdsp: displacement

Table 2.13 Number of Cycles for Arithmetic/logic Instructions

Instruction	Mnemonic (indicates the common operation when the size is omitted)	Number of Cycles
Arithmetic/logic instructions (register-register, immediate-register)	• {ABS, NEG, NOT} “Rd”/“Rs, Rd” • {ADC, MAX, MIN, ROTL, ROTR, XOR} “#IMM, Rd”/“Rs, Rd” • ADD “#IMM, Rd”/“Rs, Rd”/“#IMM, Rs, Rd”/“Rs, Rs2, Rd” • {AND, MUL, OR, SUB} “#IMM, Rd”/“Rs, Rd”/“Rs, Rs2, Rd” • {CMP, TST} “#IMM, Rs”/“Rs, Rs2” • NOP • {ROLC, RORC, SAT} “Rd” • SBB “Rs, Rd” • {SHAR, SHLL, SHLR} “#IMM, Rd”/“Rs, Rd”/“#IMM, Rs, Rd”	1
	• DIV “#IMM, Rd”/“Rs, Rd”	3 to 20*1
	• DIVU “#IMM, Rd”/“Rs, Rd”	2 to 18*1
	• {EMUL, EMULU} “#IMM, Rd”/“Rs, Rd”	2
	• SATR	3
Arithmetic/logic instructions (memory source operand)	• {ADC, ADD, AND, MAX, MIN, MUL, OR, SBB, SUB, XOR} “[Rs], Rd”/“dsp[Rs], Rd” • {CMP, TST} “[Rs], Rs2”/“dsp[Rs], Rs2”	3
	• DIV “[Rs], Rd / dsp[Rs], Rd”	5 to 22
	• DIVU“[Rs], Rd / dsp[Rs], Rd”	4 to 20
	• {EMUL, EMULU} “[Rs], Rd”/“dsp[Rs], Rd”	4
	• RMPA.B	6+7×floor(n/4)+4×(n%4) n: Number of processing bytes*2
	• RMPA.W	6+5×floor(n/2)+4×(n%2) n: Number of processing words*2
	• RMPA.L	6+4n n: Number of processing longwords*2

Note 1. The number of cycles for the dividing instruction varies according to the divisor and dividend.
Note 2. floor (x): Max. integer that is smaller than x.

Table 2.14 Number of Cycles for Transfer Instructions

Instruction	Mnemonic (indicates the common operation when the size is omitted)	Number of Cycles
Transfer instructions (register-register, immediate-register)	• MOV “#IMM, Rd”/“Rs, Rd” • {MOVU, REVL, REVW} “Rs, Rd” • SCC*nd* “Rd” • {STNZ, STZ} “#IMM, Rd”/ “Rs, Rd”	1
	• XCHG “Rs, Rd”	2
Transfer instructions (load operation)	• {MOV, MOVU} “[Rs], Rd”/“dsp[Rs], Rd”/“[Rs+], Rd”/“[-Rs], Rd”/“[Ri, Rb], Rd” • MOVLI “[Rs], Rd” • POP “Rd”	Throughput: 1 Latency: 2*1
	• POPC “CR”	Throughput: 3 Latency: 4*1
	• POPM “Rd-Rd2”	Throughput: n Latency: n+1 n: Number of registers*1, *2
Transfer instructions (store operation)	• MOV “Rs, [Rd]”/“Rs, dsp[Rd]”/“Rs, [Rd+]”/“Rs, [-Rd]”/“Rs, [Ri, Rb]”/“#IMM, dsp[Rd]”/“#IMM, [Rd]” • PUSH “Rs” • PUSHC “CR” • SCCnd “[Rd]”/“dsp[Rd]” • MOVCO “Rs, [Rd]”	1
	• PUSHM “Rs-Rs2”	n n: Number of registers*3
Transfer instructions (memory-register)	• XCHG “[Rs], Rd”/“dsp[Rs], Rd”	2
Transfer instructions (memory-memory)	• MOV “[Rs], [Rd]”/“dsp[Rs], [Rd]”/“[Rs], dsp[Rd]”/“dsp[Rs], dsp[Rd]” • PUSH “[Rs]”/“dsp[Rs]”	3

Note 1. When the load data is used by the subsequent instruction, the number of cycles described as “latency” is counted as the number of cycles for the memory load instruction. For the cycles other than the memory load instruction, the number of cycles described as “throughput” is counted.

Note 2. The POPM instruction is converted into multiple load operations. The processing is the same as the one for the load operations of the MOV instruction, where the operation is repeated for the number of specified registers.

Note 3. The PUSHM instruction is converted into multiple store operations. The processing is the same as the one for the store operations of the MOV instruction, where the operation is repeated for the number of specified registers.

Table 2.15 Number of Cycles for Bit Manipulation Instructions

Instruction	Mnemonic (indicates the common operation when the size is omitted)	Number of Cycles
Bit manipulation instructions (register)	• {BCLR, BNOT, BSET} “#IMM, Rd”/“Rs, Rd” • BMCnd “#IMM, Rd” • BTST “#IMM, Rs”/“Rs, Rs2”	1
Bit manipulation instructions (memory source operand)	• {BCLR, BNOT, BSET} “#IMM, [Rd]”/“#IMM, dsp[Rd]”/“Rs, [Rd]”/“Rs, dsp[Rd]” • BMCnd “#IMM, [Rd]”/“#IMM, dsp[Rd]” • BTST “#IMM, [Rs]”/“#IMM, dsp[Rs]”/“Rs, [Rs2]”/“Rs, dsp[Rs2]”	3

Table 2.16 Number of Cycles for Branch Instructions

Instruction	Mnemonic (indicates the common operation when the size is omitted)	Number of Cycles
Branch instructions	• B*Cnd* “pcdsp” • {BRA, BSR} “pcdsp”/“Rs” • {JMP, JSR} “Rs”	Branch taken: 3 Branch not taken: 1
	• RTE	6
	• RTFI	3
	• RTS	5
	• RTSD “#IMM”	5
	• RTSD “#IMM, Rd-Rd2”	Throughput: n<5?5:1+n Latency: n<4?5:2+n n: Number of registers*1

?: Conditional operator

Note 1. When the load data is used by the subsequent instruction, the number of cycles described as “latency” is counted as the number of cycles for the memory load instruction. For the cycles other than the memory load instruction, the number of cycles described as “throughput” is counted.

Table 2.17 Number of Cycles for Floating-Point Operation Instructions

Instruction	Mnemonic (indicates the common operation when the size is omitted)	Number of Cycles
Floating-point operation instructions (register-register, immediate-register)	• {FADD, FSUB} “#IMM, Rd”/ “Rs, Rd”/ “Rs, Rs2, Rd”	2
	• FCMP “#IMM, Rs”/“Rs, Rs2”	1
	• FDIV “#IMM, Rd”/“Rs, Rd”	16
	• FMUL “#IMM, Rd”/ “Rs, Rd” / “Rs, Rs2, Rd”	2
	• FSQRT “Rs, Rd”	16
	• {FTOI, ROUND, ITOF} “Rs, Rd”	2
	• {FTOU, UTOF} “Rs, Rd”	2
Floating-point operation instructions (memory source operand)	• {FADD, FSUB} “[Rs], Rd”/“dsp[Rs], Rd”	4
	• FCMP “[Rs], Rs2”/“dsp[Rs], Rs2”	3
	• FDIV “[Rs], Rd”/“dsp[Rs], Rd”	18
	• FMUL “[Rs], Rd”/“dsp[Rs], Rd”	4
	• FSQRT “[Rs], Rd”/“dsp[Rs], Rd”	18
	• {FTOI, ROUND, ITOF} “[Rs], Rd”/“dsp[Rs], Rd”	4
	• {FTOU, UTOF} “[Rs], Rd”/“dsp[Rs], Rd”	4

Table 2.18 Number of Cycles for DSP Instructions

Instruction	Mnemonic (indicates the common operation when the size is omitted)	Number of Cycles
DSP instructions	• {EMULA, EMACA, EMSBA, MULLH, MULHI, MULLO, MACLH, MACHI, MACLO, MSBLH, MSBHI, MSBLO}“Rs, Rs2, Ad” • {MVFACHI, MVFACMI, MVFACLO, MVFACGU} “#IMM, As, Rd” • {MVTACHI, MVTACLO, MVTACGU} “As, Rd” • {RDACW, RDACL, RACW, RACL} “#IMM, Ad”	1

Table 2.19 Number of Cycles for String Manipulation Instructions

Instruction	Mnemonic (indicates the common operation when the size is omitted)	Number of Cycles
String manipulation instructions*1	• SCMPU	2+4×floor(n/4)+4×(n%4) n: Number of comparison bytes*2
	• SMOVB	n>3?6+3×floor(n/4)+3×(n%4):2+3n n: Number of transfer bytes*2
	• SMOVF, SMOVU	2+3×floor(n/4)+3×(n%4) n: Number of transfer bytes*2
	• SSTR.B	2+floor(n/4)+n%4 n: Number of transfer bytes*2
	• SSTR.W	2+floor(n/2)+n%2 n: Number of transfer words*2
	• SSTR.L	2+n n: Number of transfer longwords
	• SUNTIL.B, SWHILE.B	3+3×floor(n/4)+3×(n%4) n: Number of comparison bytes*2
	• SUNTIL.W, SWHILE.W	3+3×floor(n/2)+3×(n%2) n: Number of comparison words*2
	• SUNTIL.L, SWHILE.L	3+3×n n: Number of comparison longwords

?: Conditional operator

Note 1. Each of the SCMPU, SMOVU, SWHILE, and SUNTIL instructions ends the execution regardless of the specified cycles, if the end condition is satisfied during execution.
Note 2. floor (x): Max. integer that is smaller than x.

Table 2.20 Number of Cycles for System Manipulation Instructions

Instruction	Mnemonic (indicates the common operation when the size is omitted)	Number of Cycles
System manipulation instructions	• {CLRPSW, SETPSW}“flag” • MVTC “#IMM, CR”/“Rs, CR” • MVFC “CR, Rd” • MVTIPL “#IMM”	1
	• RTE	6
	• RTFI	3

2.8.2 Numbers of Cycles for Response to Interrupts

Table 2.21 lists numbers of cycles taken by processing for response to interrupts.

Table 2.21 Numbers of Cycles for Response to Interrupts

Type of Interrupt Request/Details of Processing	Fast Interrupt	Other Interrupts
ICU Judgment of priority order	2 cycles	
CPU Number of cycles from notification to acceptance of the interrupt request	N cycles (varies with the instruction being executed at the time the interrupt was received)	
CPU Pre-processing by hardware Saving the current PC and PSW values in RAM (or in control registers in the case of the fast interrupt) Reading of the vector Branching to the start of the exception handling routine	4 cycles	6 cycles

Times calculated from the values in Table 2.21 will be applicable when access to memory from the CPU is processed with no waiting. The RAM and code flash memory in this MCU allow such access. Numbers of cycles for response to interrupts can be minimized by placing program code (and vectors) in code flash memory and the stack in RAM. Furthermore, place the addresses where the exception handling routine start on 8-byte boundaries.
For information on the number of cycles from notification to acceptance of the interrupt request, indicated by N in the table above, see Table 2.13 to Table 2.20.
The timing of interrupt acceptance depends on the execution state of the instruction. For more information on this, see section 13.3.1, Acceptance Timing and Saved PC Value.

3. Operating Modes

3.1 Operating Mode Types and Selection

There are two types of operating-mode selection: one is be selected by the level of pins when the reset (RES# pin reset, power-on reset) is released, and the other is selected by software after the reset is released.
Table 3.1 shows the relationship between levels on the mode-setting pins (MD) on release from the reset state and the operating mode selected at that time. For details on each of the operating modes, see section 3.3, Details of Operating Modes.

Table 3.1 Selection of Operating Modes by the Mode-Setting Pins

Mode-Setting Pin	
MD*1	**Operating Mode**
High	Single-chip mode
Low	Boot mode (SCI interface)
Low→High*2	Boot mode (FINE interface)

Note 1. Since the period between the release from the reset state and the waiting time after the release or the waiting time after the release from the power-on reset state is the period that the transition of the operating mode is in progress, do not change the input level on the MD pin. For details of the waiting time after the release from the reset state and the waiting time after the release from the power-on reset state, refer to section 39, Electrical Characteristics.
Note 2. After release the reset state while the MD pin is at the low level, switch it to the high level within 20 to 100 msec.

The endian is selectable in single-chip mode. Endian is set by the MDE.MDE[2:0] bits in the option-setting memory. For the correspondence between the setting and endian, see Table 3.2.

Table 3.2 Selection of Endian

MDE.MDE[2:0] Bit Setting	Endian
000b	Big endian
111b	Little endian

3.2 Register Descriptions

3.2.1 Mode Monitor Register (MDMONR)

Address(es): SYSTEM.MDMONR 0008 0000h

	b15	b14	b13	b12	b11	b10	b9	b8	b7	b6	b5	b4	b3	b2	b1	b0
	—	—	—	—	—	—	—	—	—	—	—	—	—	—	—	MD
Value after reset:	0	0	0	0	0	0	0	x	0	0	0	0	0	0	0	0/1*1

Bit	Symbol	Bit Name	Description	R/W
b0	MD	MD Pin Status Flag	0: The MD pin is low. 1: The MD pin is high.	R
b7 to b1	—	Reserved	These bits are read as 0.	R
b8	—	Reserved	The read value is undefined.	R
b15 to b9	—	Reserved	These bits are read as 0.	R

Note 1. This affects the level on the MD pin at the time of release from the reset state.

3.2.2 System Control Register 1 (SYSCR1)

Address(es): SYSTEM.SYSCR1 0008 0008h

	b15	b14	b13	b12	b11	b10	b9	b8	b7	b6	b5	b4	b3	b2	b1	b0
	—	—	—	—	—	—	—	—	—	—	—	—	—	—	—	RAME
Value after reset:	0	0	0	0	0	0	0	0	0	0	0	0	0	0	0	1

Bit	Symbol	Bit Name	Description	R/W
b0	RAME	RAM Enable	0: The RAM is disabled. 1: The RAM is enabled.	R/W
b15 to b1	—	Reserved	These bits are read as 0. The write value should be 0.	R/W

Note: Set the PRCR.PRC1 bit to 1 (write enabled) before rewriting this register.

RAME Bit (RAM Enable)

The RAME bit enables or disables the RAM.

A 0 should not be written to this bit during access to the RAM. When accessing the RAM immediately after changing the RAME bit from 0 (RAM disabled) to 1 (RAM enabled), make sure that the RAME bit is 1 before the access.

Even when the RAME bit is set to 0, the RAM retains its value. To retain the value in the RAM, keep the specified RAM standby voltage (VRAM). For details, refer to section 39, Electrical Characteristics.

3.3 Details of Operating Modes

3.3.1 Single-Chip Mode

In this mode, all I/O ports can be used as general input/output ports, peripheral function input/output, or interrupt input pins.
The chip starts up in single-chip mode if the high level is on the MD pin on release from the reset state.

3.3.2 Boot Mode (SCI Interface)

In this mode, the on-chip flash memory modifying program (boot program) stored in a dedicated area within the MCU operates. The on-chip flash memory (ROM and E2 DataFlash) can be modified from outside the MCU by using a universal asynchronous receiver/transmitter (SCI1). For details, see section 38, Flash Memory (FLASH).
When a reset is released while the MD pin is low, boot mode (SCI) is selected. For details on boot mode (SCI), refer to section 38.8.1, Boot Mode (SCI Interface).

3.3.3 Boot Mode (FINE Interface)

In this mode, the flash memory modifying program (boot program) stored in a dedicated area within the MCU operates. The on-chip flash memory (ROM and E2 DataFlash) can be modified from outside the MCU by using the FINE. For details, refer to section 38, Flash Memory (FLASH).
The chip starts up in boot mode (FINE interface) when the MD pin is set to the low level at the time of release from the reset state and then is then switched to the high level within 20 to 100 msec.

3.4 Transitions of Operating Modes

3.4.1 Operating Mode Transitions Determined by the Mode-Setting Pins

Figure 3.1 shows operating mode transitions determined by the settings of the MD pin.

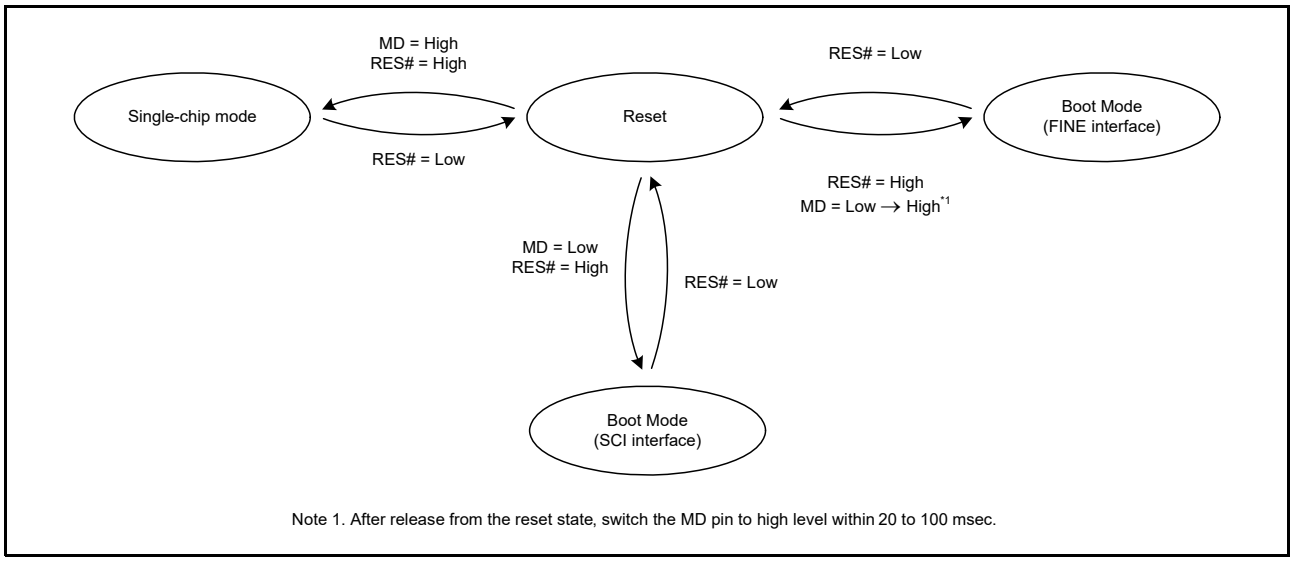

Figure 3.1 Mode-Setting Pin Levels and Operating Modes

4. Address Space

4.1 Address Space

This MCU has a 4-Gbyte address space, consisting of the range of addresses from 0000 0000h to FFFF FFFFh. That is, linear access to an address space of up to 4 Gbytes is possible, and this contains both program and data areas.
Figure 4.1 shows the memory maps.

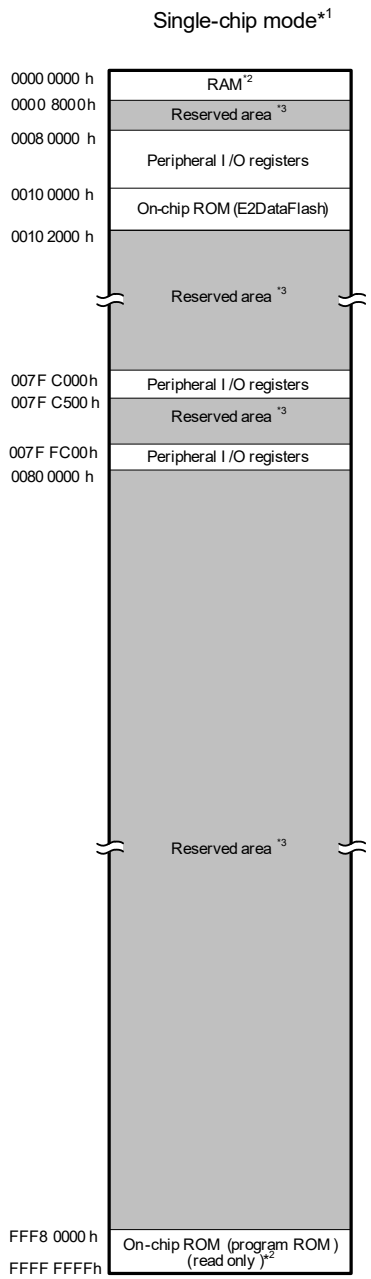

Note 1. The address space in boot mode is the same as the address space in single-chip mode.
Note 2. The capacity of ROM/RAM differs depending on the products.

ROM (bytes)		RAM (bytes)	
Capacity	**Address**	**Capacity**	**Address**
256 Kbytes	FFFC 0000h to FFFF FFFFh	32 Kbytes	0000 0000h to 0000 7FFFh
128 Kbytes	FFFE 0000h to FFFF FFFFh	16 Kbytes	0000 0000h to 0000 3FFFh

Note: See Table 1.3, List of Products, for the product type name.

Note 3. Reserved areas should not be accessed.

Figure 4.1 Memory Map in Each Operating Mode

5. I/O Registers

This section provides information on the on-chip I/O register addresses and bit configuration. The information is given as shown below. Notes on writing to registers are also given below.

(1) I/O register addresses (address order)

- Registers are listed from the lower allocation addresses.
- Registers are classified according to module symbols.
- Numbers of cycles for access indicate numbers of cycles of the given base clock.
- Among the internal I/O register area, addresses not listed in the list of registers are reserved. Reserved addresses must not be accessed. Do not access these addresses; otherwise, the operation when accessing these bits and subsequent operations cannot be guaranteed.

(2) Notes on writing to I/O registers

When writing to an I/O register, the CPU starts executing the subsequent instruction before completing I/O register write. This may cause the subsequent instruction to be executed before the post-update I/O register value is reflected on the operation.
As described in the following examples, special care is required for the cases in which the subsequent instruction must be executed after the post-update I/O register value is actually reflected.

[Examples of cases requiring special care]

- The subsequent instruction must be executed while an interrupt request is disabled with the IENj bit in IERn of the ICU (interrupt request enable bit) cleared to 0.
- A WAIT instruction is executed immediately after the preprocessing for causing a transition to the low power consumption state.

In the above cases, after writing to an I/O register, wait until the write operation is completed using the following procedure and then execute the subsequent instruction.

(a) Write to an I/O register.
(b) Read the value from the I/O register to a general register.
(c) Execute the operation using the value read.
(d) Execute the subsequent instruction.

[Instruction examples]

- Byte-size I/O registers

```
MOV.L  #SFR_ADDR, R1
MOV.B  #SFR_DATA, [R1]
CMP    [R1].UB, R1
;; Next process
```

- Word-size I/O registers

```
MOV.L  #SFR_ADDR, R1
MOV.W  #SFR_DATA, [R1]
CMP    [R1].W, R1
;; Next process
```

- Longword-size I/O registers

```
MOV.L  #SFR_ADDR, R1
MOV.L  #SFR_DATA, [R1]
CMP    [R1].L, R1
;; Next process
```

If multiple registers are written to and a subsequent instruction should be executed after the write operations are entirely completed, only read the I/O register that was last written to and execute the operation using the value; it is not necessary to read or execute operation for all the registers that were written to.

(3) Number of Access Cycles to I/O Registers

For numbers of clock cycles for access to I/O registers, see Table 5.1, List of I/O Registers (Address Order).
The number of access cycles to I/O registers is obtained by following equation.*1

Number of access cycles to I/O registers = Number of bus cycles for internal main bus 1 +
Number of divided clock synchronization cycles +
Number of bus cycles for internal peripheral bus 1 to 6

The number of bus cycles of internal peripheral bus 1 to 6 differs according to the register to be accessed.
When peripheral functions connected to internal peripheral bus 2 to 6 or registers for the control unit (except for bus error related registers) are accessed, the number of divided clock synchronization cycles is added.
In the peripheral function unit, when the frequency ratio of ICLK is equal to or greater than that of PCLK (or FCLK), the sum of the number of bus cycles for internal main bus 1 and the number of the divided clock synchronization cycles will be one cycle of PCLK (or FCLK) at a maximum. Therefore, one PCLK (or FCLK) has been added to the number of access cycles shown in Table 5.1.

Note 1. This applies to the number of cycles when the access from the CPU does not conflict with the instruction fetching to the external memory or bus access from the different bus master (DMAC or DTC).

(4) Restrictions in Relation to RMPA and String-Manipulation Instructions

The allocation of data to be handled by RMPA or string-manipulation instructions to I/O registers is prohibited, and operation is not guaranteed if this restriction is not observed.

(5) Notes on Sleep Mode and Mode Transitions

During sleep mode or mode transitions, do not write to the system control related registers (indicated by 'SYSTEM' in the Module Symbol column in Table 5.1, List of I/O Registers (Address Order)).

5.1 I/O Register Addresses (Address Order)

Table 5.1 List of I/O Registers (Address Order) (1/23)

Address	Module Symbol	Register Name	Register Symbol	Number of Bits	Access Size	Number of Access Cycles ICLK ≥ PCLK	Reference Section
0008 0000h	SYSTEM	Mode Monitor Register	MDMONR	16	16	3 ICLK	section 3.
0008 0008h	SYSTEM	System Control Register 1	SYSCR1	16	16	3 ICLK	section 3.
0008 000Ch	SYSTEM	Standby Control Register	SBYCR	16	16	3 ICLK	section 11.
0008 0010h	SYSTEM	Module Stop Control Register A	MSTPCRA	32	32	3 ICLK	section 11.
0008 0014h	SYSTEM	Module Stop Control Register B	MSTPCRB	32	32	3 ICLK	section 11.
0008 0018h	SYSTEM	Module Stop Control Register C	MSTPCRC	32	32	3 ICLK	section 11.
0008 0020h	SYSTEM	System Clock Control Register	SCKCR	32	32	3 ICLK	section 9.
0008 0026h	SYSTEM	System Clock Control Register 3	SCKCR3	16	16	3 ICLK	section 9.
0008 0028h	SYSTEM	PLL Control Register	PLLCR	16	16	3 ICLK	section 9.
0008 002Ah	SYSTEM	PLL Control Register 2	PLLCR2	8	8	3 ICLK	section 9.
0008 0032h	SYSTEM	Main Clock Oscillator Control Register	MOSCCR	8	8	3 ICLK	section 9.
0008 0034h	SYSTEM	Low-Speed On-Chip Oscillator Control Register	LOCOCR	8	8	3 ICLK	section 9.
0008 0035h	SYSTEM	IWDT-Dedicated On-Chip Oscillator Control Register	ILOCOCR	8	8	3 ICLK	section 9.
0008 0036h	SYSTEM	High-Speed On-Chip Oscillator Control Register	HOCOCR	8	8	3 ICLK	section 9.
0008 003Ch	SYSTEM	Oscillation Stabilization Flag Register	OSCOVFSR	8	8	3 ICLK	section 9.
0008 003Eh	SYSTEM	CLKOUT Output Control Register	CKOCR	16	16	3 ICLK	section 9.
0008 0040h	SYSTEM	Oscillation Stop Detection Control Register	OSTDCR	8	8	3 ICLK	section 9.
0008 0041h	SYSTEM	Oscillation Stop Detection Status Register	OSTDSR	8	8	3 ICLK	section 9.
0008 0060h	SYSTEM	Low-Speed On-Chip Oscillator Trimming Register	LOCOTRR	8	8	3 ICLK	section 9.
0008 0064h	SYSTEM	IWDT-Dedicated On-Chip Oscillator Trimming Register	ILOCOTRR	8	8	3 ICLK	section 9.
0008 0068h	SYSTEM	High-Speed On-Chip Oscillator Trimming Register 0	HOCOTRR0	8	8	3 ICLK	section 9.
0008 00A0h	SYSTEM	Operating Power Control Register	OPCCR	8	8	3 ICLK	section 11.
0008 00A2h	SYSTEM	Main Clock Oscillator Wait Control Register	MOSCWTCR	8	8	3 ICLK	section 9.
0008 00B0h	LPT	Low-Power Timer Control Register 1	LPTCR1	8	8	3 ICLK	section 26.
0008 00B1h	LPT	Low-Power Timer Control Register 2	LPTCR2	8	8	3 ICLK	section 26.
0008 00B2h	LPT	Low-Power Timer Control Register 3	LPTCR3	8	8	3 ICLK	section 26.
0008 00B4h	LPT	Low-Power Timer Period Setting Register	LPTPRD	16	16	3 ICLK	section 26.
0008 00B8h	LPT	Low-Power Timer Compare Register 0	LPCMR0	16	16	3 ICLK	section 26.
0008 00BCh	LPT	Low-Power Timer Standby Wakeup Enable Register	LPWUCR	16	16	3 ICLK	section 26.
0008 00C0h	SYSTEM	Reset Status Register 2	RSTSR2	8	8	3 ICLK	section 6.
0008 00C2h	SYSTEM	Software Reset Register	SWRR	16	16	3 ICLK	section 6.
0008 00E0h	SYSTEM	Voltage Monitoring 1 Circuit Control Register 1	LVD1CR1	8	8	3 ICLK	section 8.
0008 00E1h	SYSTEM	Voltage Monitoring 1 Circuit Status Register	LVD1SR	8	8	3 ICLK	section 8.
0008 00E2h	SYSTEM	Voltage Monitoring 2 Circuit Control Register 1	LVD2CR1	8	8	3 ICLK	section 8.
0008 00E3h	SYSTEM	Voltage Monitoring 2 Circuit Status Register	LVD2SR	8	8	3 ICLK	section 8.
0008 03FEh	SYSTEM	Protect Register	PRCR	16	16	3 ICLK	section 12.
0008 1300h	BSC	Bus Error Status Clear Register	BERCLR	8	8	2 ICLK	section 15.
0008 1304h	BSC	Bus Error Monitoring Enable Register	BEREN	8	8	2 ICLK	section 15.
0008 1308h	BSC	Bus Error Status Register 1	BERSR1	8	8	2 ICLK	section 15.
0008 130Ah	BSC	Bus Error Status Register 2	BERSR2	16	16	2 ICLK	section 15.
0008 1310h	BSC	Bus Priority Control Register	BUSPRI	16	16	2 ICLK	section 15.
0008 2000h	DMAC0	DMA Source Address Register	DMSAR	32	32	2 ICLK	section 17.
0008 2004h	DMAC0	DMA Destination Address Register	DMDAR	32	32	2 ICLK	section 17.
0008 2008h	DMAC0	DMA Transfer Count Register	DMCRA	32	32	2 ICLK	section 17.
0008 200Ch	DMAC0	DMA Block Transfer Count Register	DMCRB	16	16	2 ICLK	section 17.
0008 2010h	DMAC0	DMA Transfer Mode Register	DMTMD	16	16	2 ICLK	section 17.
0008 2013h	DMAC0	DMA Interrupt Setting Register	DMINT	8	8	2 ICLK	section 17.
0008 2014h	DMAC0	DMA Address Mode Register	DMAMD	16	16	2 ICLK	section 17.
0008 2018h	DMAC0	DMA Offset Register	DMOFR	32	32	2 ICLK	section 17.

Table 5.1 List of I/O Registers (Address Order) (2/23)

Address	Module Symbol	Register Name	Register Symbol	Number of Bits	Access Size	Number of Access Cycles ICLK ≥ PCLK	Reference Section
0008 201Ch	DMAC0	DMA Transfer Enable Register	DMCNT	8	8	2 ICLK	section 17.
0008 201Dh	DMAC0	DMA Software Start Register	DMREQ	8	8	2 ICLK	section 17.
0008 201Eh	DMAC0	DMA Status Register	DMSTS	8	8	2 ICLK	section 17.
0008 201Fh	DMAC0	DMA Activation Source Flag Control Register	DMCSL	8	8	2 ICLK	section 17.
0008 2040h	DMAC1	DMA Source Address Register	DMSAR	32	32	2 ICLK	section 17.
0008 2044h	DMAC1	DMA Destination Address Register	DMDAR	32	32	2 ICLK	section 17.
0008 2048h	DMAC1	DMA Transfer Count Register	DMCRA	32	32	2 ICLK	section 17.
0008 204Ch	DMAC1	DMA Block Transfer Count Register	DMCRB	16	16	2 ICLK	section 17.
0008 2050h	DMAC1	DMA Transfer Mode Register	DMTMD	16	16	2 ICLK	section 17.
0008 2053h	DMAC1	DMA Interrupt Setting Register	DMINT	8	8	2 ICLK	section 17.
0008 2054h	DMAC1	DMA Address Mode Register	DMAMD	16	16	2 ICLK	section 17.
0008 205Ch	DMAC1	DMA Transfer Enable Register	DMCNT	8	8	2 ICLK	section 17.
0008 205Dh	DMAC1	DMA Software Start Register	DMREQ	8	8	2 ICLK	section 17.
0008 205Eh	DMAC1	DMA Status Register	DMSTS	8	8	2 ICLK	section 17.
0008 205Fh	DMAC1	DMA Activation Source Flag Control Register	DMCSL	8	8	2 ICLK	section 17.
0008 2080h	DMAC2	DMA Source Address Register	DMSAR	32	32	2 ICLK	section 17.
0008 2084h	DMAC2	DMA Destination Address Register	DMDAR	32	32	2 ICLK	section 17.
0008 2088h	DMAC2	DMA Transfer Count Register	DMCRA	32	32	2 ICLK	section 17.
0008 208Ch	DMAC2	DMA Block Transfer Count Register	DMCRB	16	16	2 ICLK	section 17.
0008 2090h	DMAC2	DMA Transfer Mode Register	DMTMD	16	16	2 ICLK	section 17.
0008 2093h	DMAC2	DMA Interrupt Setting Register	DMINT	8	8	2 ICLK	section 17.
0008 2094h	DMAC2	DMA Address Mode Register	DMAMD	16	16	2 ICLK	section 17.
0008 209Ch	DMAC2	DMA Transfer Enable Register	DMCNT	8	8	2 ICLK	section 17.
0008 209Dh	DMAC2	DMA Software Start Register	DMREQ	8	8	2 ICLK	section 17.
0008 209Eh	DMAC2	DMA Status Register	DMSTS	8	8	2 ICLK	section 17.
0008 209Fh	DMAC2	DMA Activation Source Flag Control Register	DMCSL	8	8	2 ICLK	section 17.
0008 20C0h	DMAC3	DMA Source Address Register	DMSAR	32	32	2 ICLK	section 17.
0008 20C4h	DMAC3	DMA Destination Address Register	DMDAR	32	32	2 ICLK	section 17.
0008 20C8h	DMAC3	DMA Transfer Count Register	DMCRA	32	32	2 ICLK	section 17.
0008 20CCh	DMAC3	DMA Block Transfer Count Register	DMCRB	16	16	2 ICLK	section 17.
0008 20D0h	DMAC3	DMA Transfer Mode Register	DMTMD	16	16	2 ICLK	section 17.
0008 20D3h	DMAC3	DMA Interrupt Setting Register	DMINT	8	8	2 ICLK	section 17.
0008 20D4h	DMAC3	DMA Address Mode Register	DMAMD	16	16	2 ICLK	section 17.
0008 20DCh	DMAC3	DMA Transfer Enable Register	DMCNT	8	8	2 ICLK	section 17.
0008 20DDh	DMAC3	DMA Software Start Register	DMREQ	8	8	2 ICLK	section 17.
0008 20DEh	DMAC3	DMA Status Register	DMSTS	8	8	2 ICLK	section 17.
0008 20DFh	DMAC3	DMA Activation Source Flag Control Register	DMCSL	8	8	2 ICLK	section 17.
0008 2200h	DMAC	DMA Module Activation Register	DMAST	8	8	2 ICLK	section 17.
0008 2400h	DTC	DTC Control Register	DTCCR	8	8	2 ICLK	section 18.
0008 2404h	DTC	DTC Vector Base Register	DTCVBR	32	32	2 ICLK	section 18.
0008 2408h	DTC	DTC Address Mode Register	DTCADMOD	8	8	2 ICLK	section 18.
0008 240Ch	DTC	DTC Module Start Register	DTCST	8	8	2 ICLK	section 18.
0008 240Eh	DTC	DTC Status Register	DTCSTS	16	16	2 ICLK	section 18.
0008 6400h	MPU	Region-0 Start Page Number Register	RSPAGE0	32	32	1 ICLK	section 16.
0008 6404h	MPU	Region-0 End Page Number Register	REPAGE0	32	32	1 ICLK	section 16.
0008 6408h	MPU	Region-1 Start Page Number Register	RSPAGE1	32	32	1 ICLK	section 16.
0008 640Ch	MPU	Region-1 End Page Number Register	REPAGE1	32	32	1 ICLK	section 16.
0008 6410h	MPU	Region-2 Start Page Number Register	RSPAGE2	32	32	1 ICLK	section 16.
0008 6414h	MPU	Region-2 End Page Number Register	REPAGE2	32	32	1 ICLK	section 16.
0008 6418h	MPU	Region-3 Start Page Number Register	RSPAGE3	32	32	1 ICLK	section 16.
0008 641Ch	MPU	Region-3 End Page Number Register	REPAGE3	32	32	1 ICLK	section 16.

Table 5.1 List of I/O Registers (Address Order) (3/23)

Address	Module Symbol	Register Name	Register Symbol	Number of Bits	Access Size	Number of Access Cycles ICLK ≥ PCLK	Reference Section
0008 6420h	MPU	Region-4 Start Page Number Register	RSPAGE4	32	32	1 ICLK	section 16.
0008 6424h	MPU	Region-4 End Page Number Register	REPAGE4	32	32	1 ICLK	section 16.
0008 6428h	MPU	Region-5 Start Page Number Register	RSPAGE5	32	32	1 ICLK	section 16.
0008 642Ch	MPU	Region-5 End Page Number Register	REPAGE5	32	32	1 ICLK	section 16.
0008 6430h	MPU	Region-6 Start Page Number Register	RSPAGE6	32	32	1 ICLK	section 16.
0008 6434h	MPU	Region-6 End Page Number Register	REPAGE6	32	32	1 ICLK	section 16.
0008 6438h	MPU	Region-7 Start Page Number Register	RSPAGE7	32	32	1 ICLK	section 16.
0008 643Ch	MPU	Region-7 End Page Number Register	REPAGE7	32	32	1 ICLK	section 16.
0008 6500h	MPU	Memory-Protection Enable Register	MPEN	32	32	1 ICLK	section 16.
0008 6504h	MPU	Background Access Control Register	MPBAC	32	32	1 ICLK	section 16.
0008 6508h	MPU	Memory-Protection Error Status-Clearing Register	MPECLR	32	32	1 ICLK	section 16.
0008 650Ch	MPU	Memory-Protection Error Status Register	MPESTS	32	32	1 ICLK	section 16.
0008 6514h	MPU	Data Memory-Protection Error Address Register	MPDEA	32	32	1 ICLK	section 16.
0008 6520h	MPU	Region Search Address Register	MPSA	32	32	1 ICLK	section 16.
0008 6524h	MPU	Region Search Operation Register	MPOPS	16	16	1 ICLK	section 16.
0008 6526h	MPU	Region Invalidation Operation Register	MPOPI	16	16	1 ICLK	section 16.
0008 6528h	MPU	Instruction-Hit Region Register	MHITI	32	32	1 ICLK	section 16.
0008 652Ch	MPU	Data-Hit Region Register	MHITD	32	32	1 ICLK	section 16.
0008 7010h to 0008 70FFh	ICU	Interrupt Request Register 016 to Interrupt Request Register 255	IR016 to IR255	8	8	2 ICLK	section 14.
0008 711Bh to 0008 71FFh	ICU	DTC Transfer Request Enable Register 027 to DTC Transfer Request Enable Register 255	DTCER027 to DTCER255	8	8	2 ICLK	section 14.
0008 7202h to 0008 721Fh	ICU	Interrupt Request Enable Register 02 to Interrupt Request Enable Register 1F	IER02 to IER1F	8	8	2 ICLK	section 14.
0008 72E0h	ICU	Software Interrupt Generation Register	SWINTR	8	8	2 ICLK	section 14.
0008 72F0h	ICU	Fast Interrupt Set Register	FIR	16	16	2 ICLK	section 14.
0008 7300h to 0008 73FFh	ICU	Interrupt Source Priority Register 000 to Interrupt Source Priority Register 255	IPR000 to IPR255	8	8	2 ICLK	section 14.
0008 7400h	ICU	DMAC Trigger Select Register 0	DMRSR0	8	8	2 ICLK	section 14.
0008 7404h	ICU	DMAC Trigger Select Register 1	DMRSR1	8	8	2 ICLK	section 14.
0008 7408h	ICU	DMAC Trigger Select Register 2	DMRSR2	8	8	2 ICLK	section 14.
0008 740Ch	ICU	DMAC Trigger Select Register 3	DMRSR3	8	8	2 ICLK	section 14.
0008 7500h to 0008 7507h	ICU	IRQ Control Register 0 to IRQ Control Register 7	IRQCR0 to IRQCR7	8	8	2 ICLK	section 14.
0008 7510h	ICU	IRQ Pin Digital Filter Enable Register 0	IRQFLTE0	8	8	2 ICLK	section 14.
0008 7514h	ICU	IRQ Pin Digital Filter Setting Register 0	IRQFLTC0	16	16	2 ICLK	section 14.
0008 7580h	ICU	Non-Maskable Interrupt Status Register	NMISR	8	8	2 ICLK	section 14.
0008 7581h	ICU	Non-Maskable Interrupt Enable Register	NMIER	8	8	2 ICLK	section 14.
0008 7582h	ICU	Non-Maskable Interrupt Status Clear Register	NMICLR	8	8	2 ICLK	section 14.
0008 7583h	ICU	NMI Pin Interrupt Control Register	NMICR	8	8	2 ICLK	section 14.
0008 7590h	ICU	NMI Pin Digital Filter Enable Register	NMIFLTE	8	8	2 ICLK	section 14.
0008 7594h	ICU	NMI Pin Digital Filter Setting Register	NMIFLTC	8	8	2 ICLK	section 14.
0008 8000h	CMT	Compare Match Timer Start Register 0	CMSTR0	16	16	2 or 3 PCLKB	section 25.
0008 8002h	CMT0	Compare Match Timer Control Register	CMCR	16	16	2 or 3 PCLKB	section 25.
0008 8004h	CMT0	Compare Match Counter	CMCNT	16	16	2 or 3 PCLKB	section 25.
0008 8006h	CMT0	Compare Match Constant Register	CMCOR	16	16	2 or 3 PCLKB	section 25.
0008 8008h	CMT1	Compare Match Timer Control Register	CMCR	16	16	2 or 3 PCLKB	section 25.
0008 800Ah	CMT1	Compare Match Counter	CMCNT	16	16	2 or 3 PCLKB	section 25.
0008 800Ch	CMT1	Compare Match Constant Register	CMCOR	16	16	2 or 3 PCLKB	section 25.
0008 8030h	IWDT	IWDT Refresh Register	IWDTRR	8	8	2 or 3 PCLKB	section 27.
0008 8032h	IWDT	IWDT Control Register	IWDTCR	16	16	2 or 3 PCLKB	section 27.
0008 8034h	IWDT	IWDT Status Register	IWDTSR	16	16	2 or 3 PCLKB	section 27.
0008 8036h	IWDT	IWDT Reset Control Register	IWDTRCR	8	8	2 or 3 PCLKB	section 27.

Table 5.1 List of I/O Registers (Address Order) (4/23)

Address	Module Symbol	Register Name	Register Symbol	Number of Bits	Access Size	Number of Access Cycles ICLK ≥ PCLK	Reference Section
0008 8038h	IWDT	IWDT Count Stop Control Register	IWDTCSTPR	8	8	2 or 3 PCLKB	section 27.
0008 8200h	TMR0	Timer Control Register	TCR	8	8	2 or 3 PCLKB	section 24.
0008 8201h	TMR1	Timer Control Register	TCR	8	8	2 or 3 PCLKB	section 24.
0008 8202h	TMR0	Timer Control/Status Register	TCSR	8	8	2 or 3 PCLKB	section 24.
0008 8203h	TMR1	Timer Control/Status Register	TCSR	8	8	2 or 3 PCLKB	section 24.
0008 8204h	TMR0	Time Constant Register A	TCORA	8	8	2 or 3 PCLKB	section 24.
0008 8204h	TMR01	Time Constant Register A	TCORA	16	16	2 or 3 PCLKB	section 24.
0008 8205h	TMR1	Time Constant Register A	TCORA	8	8*1	2 or 3 PCLKB	section 24.
0008 8206h	TMR0	Time Constant Register B	TCORB	8	8	2 or 3 PCLKB	section 24.
0008 8206h	TMR01	Time Constant Register B	TCORB	16	16	2 or 3 PCLKB	section 24.
0008 8207h	TMR1	Time Constant Register B	TCORB	8	8*1	2 or 3 PCLKB	section 24.
0008 8208h	TMR0	Timer Counter	TCNT	8	8	2 or 3 PCLKB	section 24.
0008 8208h	TMR01	Timer Counter	TCNT	16	16	2 or 3 PCLKB	section 24.
0008 8209h	TMR1	Timer Counter	TCNT	8	8*1	2 or 3 PCLKB	section 24.
0008 820Ah	TMR0	Timer Counter Control Register	TCCR	8	8	2 or 3 PCLKB	section 24.
0008 820Ah	TMR01	Timer Counter Control Register	TCCR	16	16	2 or 3 PCLKB	section 24.
0008 820Bh	TMR1	Timer Counter Control Register	TCCR	8	8*1	2 or 3 PCLKB	section 24.
0008 820Ch	TMR0	Timer Counter Start Register	TCSTR	8	8	2 or 3 PCLKB	section 24.
0008 8210h	TMR2	Timer Control Register	TCR	8	8	2 or 3 PCLKB	section 24.
0008 8211h	TMR3	Timer Control Register	TCR	8	8	2 or 3 PCLKB	section 24.
0008 8212h	TMR2	Timer Control/Status Register	TCSR	8	8	2 or 3 PCLKB	section 24.
0008 8213h	TMR3	Timer Control/Status Register	TCSR	8	8	2 or 3 PCLKB	section 24.
0008 8214h	TMR2	Time Constant Register A	TCORA	8	8	2 or 3 PCLKB	section 24.
0008 8214h	TMR23	Time Constant Register A	TCORA	16	16	2 or 3 PCLKB	section 24.
0008 8215h	TMR3	Time Constant Register A	TCORA	8	8*1	2 or 3 PCLKB	section 24.
0008 8216h	TMR2	Time Constant Register B	TCORB	8	8	2 or 3 PCLKB	section 24.
0008 8216h	TMR23	Time Constant Register B	TCORB	16	16	2 or 3 PCLKB	section 24.
0008 8217h	TMR3	Time Constant Register B	TCORB	8	8*1	2 or 3 PCLKB	section 24.
0008 8218h	TMR2	Timer Counter	TCNT	8	8	2 or 3 PCLKB	section 24.
0008 8218h	TMR23	Timer Counter	TCNT	16	16	2 or 3 PCLKB	section 24.
0008 8219h	TMR3	Timer Counter	TCNT	8	8*1	2 or 3 PCLKB	section 24.
0008 821Ah	TMR2	Timer Counter Control Register	TCCR	8	8	2 or 3 PCLKB	section 24.
0008 821Ah	TMR23	Timer Counter Control Register	TCCR	16	16	2 or 3 PCLKB	section 24.
0008 821Bh	TMR3	Timer Counter Control Register	TCCR	8	8*1	2 or 3 PCLKB	section 24.
0008 821Ch	TMR2	Timer Counter Start Register	TCSTR	8	8	2 or 3 PCLKB	section 24.
0008 8280h	CRC	CRC Control Register	CRCCR	8	8	2 or 3 PCLKB	section 32.
0008 8281h	CRC	CRC Data Input Register	CRCDIR	8	8	2 or 3 PCLKB	section 32.
0008 8282h	CRC	CRC Data Output Register	CRCDOR	16	16	2 or 3 PCLKB	section 32.
0008 8300h	RIIC0	I^2C-bus Control Register 1	ICCR1	8	8	2 or 3 PCLKB	section 29.
0008 8301h	RIIC0	I^2C-bus Control Register 2	ICCR2	8	8	2 or 3 PCLKB	section 29.
0008 8302h	RIIC0	I^2C-bus Mode Register 1	ICMR1	8	8	2 or 3 PCLKB	section 29.
0008 8303h	RIIC0	I^2C-bus Mode Register 2	ICMR2	8	8	2 or 3 PCLKB	section 29.
0008 8304h	RIIC0	I^2C-bus Mode Register 3	ICMR3	8	8	2 or 3 PCLKB	section 29.
0008 8305h	RIIC0	I^2C-bus Function Enable Register	ICFER	8	8	2 or 3 PCLKB	section 29.
0008 8306h	RIIC0	I^2C-bus Status Enable Register	ICSER	8	8	2 or 3 PCLKB	section 29.
0008 8307h	RIIC0	I^2C-bus Interrupt Enable Register	ICIER	8	8	2 or 3 PCLKB	section 29.
0008 8308h	RIIC0	I^2C-bus Status Register 1	ICSR1	8	8	2 or 3 PCLKB	section 29.
0008 8309h	RIIC0	I^2C-bus Status Register 2	ICSR2	8	8	2 or 3 PCLKB	section 29.
0008 830Ah	RIIC0	Slave Address Register L0	SARL0	8	8	2 or 3 PCLKB	section 29.
0008 830Bh	RIIC0	Slave Address Register U0	SARU0	8	8	2 or 3 PCLKB	section 29.
0008 830Ch	RIIC0	Slave Address Register L1	SARL1	8	8	2 or 3 PCLKB	section 29.

Table 5.1 List of I/O Registers (Address Order) (5/23)

Address	Module Symbol	Register Name	Register Symbol	Number of Bits	Access Size	Number of Access Cycles ICLK ≥ PCLK	Reference Section
0008 830Dh	RIIC0	Slave Address Register U1	SARU1	8	8	2 or 3 PCLKB	section 29.
0008 830Eh	RIIC0	Slave Address Register L2	SARL2	8	8	2 or 3 PCLKB	section 29.
0008 830Fh	RIIC0	Slave Address Register U2	SARU2	8	8	2 or 3 PCLKB	section 29.
0008 8310h	RIIC0	I^2C-bus Bit Rate Low-Level Register	ICBRL	8	8	2 or 3 PCLKB	section 29.
0008 8311h	RIIC0	I^2C-bus Bit Rate High-Level Register	ICBRH	8	8	2 or 3 PCLKB	section 29.
0008 8312h	RIIC0	I^2C-bus Transmit Data Register	ICDRT	8	8	2 or 3 PCLKB	section 29.
0008 8313h	RIIC0	I^2C-bus Receive Data Register	ICDRR	8	8	2 or 3 PCLKB	section 29.
0008 8380h	RSPI0	RSPI Control Register	SPCR	8	8	2 or 3 PCLKB	section 31.
0008 8381h	RSPI0	RSPI Slave Select Polarity Register	SSLP	8	8	2 or 3 PCLKB	section 31.
0008 8382h	RSPI0	RSPI Pin Control Register	SPPCR	8	8	2 or 3 PCLKB	section 31.
0008 8383h	RSPI0	RSPI Status Register	SPSR	8	8	2 or 3 PCLKB	section 31.
0008 8384h	RSPI0	RSPI Data Register	SPDR	32	16, 32	2 or 3 PCLKB	section 31.
0008 8388h	RSPI0	RSPI Sequence Control Register	SPSCR	8	8	2 or 3 PCLKB	section 31.
0008 8389h	RSPI0	RSPI Sequence Status Register	SPSSR	8	8	2 or 3 PCLKB	section 31.
0008 838Ah	RSPI0	RSPI Bit Rate Register	SPBR	8	8	2 or 3 PCLKB	section 31.
0008 838Bh	RSPI0	RSPI Data Control Register	SPDCR	8	8	2 or 3 PCLKB	section 31.
0008 838Ch	RSPI0	RSPI Clock Delay Register	SPCKD	8	8	2 or 3 PCLKB	section 31.
0008 838Dh	RSPI0	RSPI Slave Select Negation Delay Register	SSLND	8	8	2 or 3 PCLKB	section 31.
0008 838Eh	RSPI0	RSPI Next-Access Delay Register	SPND	8	8	2 or 3 PCLKB	section 31.
0008 838Fh	RSPI0	RSPI Control Register 2	SPCR2	8	8	2 or 3 PCLKB	section 31.
0008 8390h	RSPI0	RSPI Command Register 0	SPCMD0	16	16	2 or 3 PCLKB	section 31.
0008 8392h	RSPI0	RSPI Command Register 1	SPCMD1	16	16	2 or 3 PCLKB	section 31.
0008 8394h	RSPI0	RSPI Command Register 2	SPCMD2	16	16	2 or 3 PCLKB	section 31.
0008 8396h	RSPI0	RSPI Command Register 3	SPCMD3	16	16	2 or 3 PCLKB	section 31.
0008 8398h	RSPI0	RSPI Command Register 4	SPCMD4	16	16	2 or 3 PCLKB	section 31.
0008 839Ah	RSPI0	RSPI Command Register 5	SPCMD5	16	16	2 or 3 PCLKB	section 31.
0008 839Ch	RSPI0	RSPI Command Register 6	SPCMD6	16	16	2 or 3 PCLKB	section 31.
0008 839Eh	RSPI0	RSPI Command Register 7	SPCMD7	16	16	2 or 3 PCLKB	section 31.
0008 8900h	POE	Input Level Control/Status Register 1	ICSR1	16	8, 16	2 or 3 PCLKB	section 23.
0008 8902h	POE	Output Level Control/Status Register 1	OCSR1	16	8, 16	2 or 3 PCLKB	section 23.
0008 8908h	POE	Input Level Control/Status Register 2	ICSR2	16	8, 16	2 or 3 PCLKB	section 23.
0008 890Ah	POE	Software Port Output Enable Register	SPOER	8	8	2 or 3 PCLKB	section 23.
0008 890Bh	POE	Port Output Enable Control Register 1	POECR1	8	8	2 or 3 PCLKB	section 23.
0008 890Ch	POE	Port Output Enable Control Register 2	POECR2	8	8	2 or 3 PCLKB	section 23.
0008 890Eh	POE	Input Level Control/Status Register 3	ICSR3	16	8, 16	2 or 3 PCLKB	section 23.
0008 9000h	S12AD	A/D Control Register	ADCSR	16	16	2 or 3 PCLKB	section 35.
0008 9004h	S12AD	A/D Channel Select Register A0	ADANSA0	16	16	2 or 3 PCLKB	section 35.
0008 9008h	S12AD	A/D-Converted Value Addition/Average Function Select Register 0	ADADS0	16	16	2 or 3 PCLKB	section 35.
0008 900Ch	S12AD	A/D-Converted Value Addition/Average Count Select Register	ADADC	8	8	2 or 3 PCLKB	section 35.
0008 900Eh	S12AD	A/D Control Extended Register	ADCER	16	16	2 or 3 PCLKB	section 35.
0008 9010h	S12AD	A/D Conversion Start Trigger Select Register	ADSTRGR	16	16	2 or 3 PCLKB	section 35.
0008 9014h	S12AD	A/D Channel Select Register B0	ADANSB0	16	16	2 or 3 PCLKB	section 35.
0008 9018h	S12AD	A/D Data Duplication Register	ADDBLDR	16	16	2 or 3 PCLKB	section 35.
0008 901Eh	S12AD	A/D Self-Diagnosis Data Register	ADRD	16	16	2 or 3 PCLKB	section 35.
0008 9020h	S12AD	A/D Data Register 0	ADDR0	16	16	2 or 3 PCLKB	section 35.
0008 9022h	S12AD	A/D Data Register 1	ADDR1	16	16	2 or 3 PCLKB	section 35.
0008 9024h	S12AD	A/D Data Register 2	ADDR2	16	16	2 or 3 PCLKB	section 35.
0008 9026h	S12AD	A/D Data Register 3	ADDR3	16	16	2 or 3 PCLKB	section 35.
0008 9028h	S12AD	A/D Data Register 4	ADDR4	16	16	2 or 3 PCLKB	section 35.
0008 902Ah	S12AD	A/D Data Register 5	ADDR5	16	16	2 or 3 PCLKB	section 35.
0008 907Ah	S12AD	A/D Disconnection Detection Control Register	ADDISCR	8	8	2 or 3 PCLKB	section 35.

Table 5.1 List of I/O Registers (Address Order) (6/23)

Address	Module Symbol	Register Name	Register Symbol	Number of Bits	Access Size	Number of Access Cycles ICLK ≥ PCLK	Reference Section
0008 907Dh	S12AD	A/D Event Link Control Register	ADELCCR	8	8	2 or 3 PCLKB	section 35.
0008 9080h	S12AD	A/D Group Scan Priority Control Register	ADGSPCR	16	16	2 or 3 PCLKB	section 35.
0008 908Ah	S12AD	A/D High-Potential/Low-Potential Reference Voltage Control Register	ADHVREFCNT	8	8	2 or 3 PCLKB	section 35.
0008 908Ch	S12AD	A/D Compare Function Window A/B Status Monitor Register	ADWINMON	8	8	2 or 3 PCLKB	section 35.
0008 9090h	S12AD	A/D Compare Function Control Register	ADCMPCR	16	16	2 or 3 PCLKB	section 35.
0008 9094h	S12AD	A/D Compare Function Window A Channel Select Register 0	ADCMPANSR0	16	16	2 or 3 PCLKB	section 35.
0008 9098h	S12AD	A/D Compare Function Window A Comparison Condition Setting Register 0	ADCMPLR0	16	16	2 or 3 PCLKB	section 35.
0008 909Ch	S12AD	A/D Compare Function Window A Lower-Side Level Setting Register	ADCMPDR0	16	16	2 or 3 PCLKB	section 35.
0008 909Eh	S12AD	A/D Compare Function Window A Upper-Side Level Setting Register	ADCMPDR1	16	16	2 or 3 PCLKB	section 35.
0008 90A0h	S12AD	A/D Compare Function Window A Channel Status Register 0	ADCMPSR0	16	16	2 or 3 PCLKB	section 35.
0008 90A6h	S12AD	A/D Compare Function Window B Channel Select Register	ADCMPBNSR	8	8	2 or 3 PCLKB	section 35.
0008 90A8h	S12AD	A/D Compare Function Window B Lower-Side Level Setting Register	ADWINLLB	16	16	2 or 3 PCLKB	section 35.
0008 90AAh	S12AD	A/D Compare Function Window B Upper-Side Level Setting Register	ADWINULB	16	16	2 or 3 PCLKB	section 35.
0008 90ACh	S12AD	A/D Compare Function Window B Channel Status Register	ADCMPBSR	8	8	2 or 3 PCLKB	section 35.
0008 90B0h	S12AD	A/D Data Storage Buffer Register 0	ADBUF0	16	16	2 or 3 PCLKB	section 35.
0008 90B2h	S12AD	A/D Data Storage Buffer Register 1	ADBUF1	16	16	2 or 3 PCLKB	section 35.
0008 90B4h	S12AD	A/D Data Storage Buffer Register 2	ADBUF2	16	16	2 or 3 PCLKB	section 35.
0008 90B6h	S12AD	A/D Data Storage Buffer Register 3	ADBUF3	16	16	2 or 3 PCLKB	section 35.
0008 90B8h	S12AD	A/D Data Storage Buffer Register 4	ADBUF4	16	16	2 or 3 PCLKB	section 35.
0008 90BAh	S12AD	A/D Data Storage Buffer Register 5	ADBUF5	16	16	2 or 3 PCLKB	section 35.
0008 90BCh	S12AD	A/D Data Storage Buffer Register 6	ADBUF6	16	16	2 or 3 PCLKB	section 35.
0008 90BEh	S12AD	A/D Data Storage Buffer Register 7	ADBUF7	16	16	2 or 3 PCLKB	section 35.
0008 90C0h	S12AD	A/D Data Storage Buffer Register 8	ADBUF8	16	16	2 or 3 PCLKB	section 35.
0008 90C2h	S12AD	A/D Data Storage Buffer Register 9	ADBUF9	16	16	2 or 3 PCLKB	section 35.
0008 90C4h	S12AD	A/D Data Storage Buffer Register 10	ADBUF10	16	16	2 or 3 PCLKB	section 35.
0008 90C6h	S12AD	A/D Data Storage Buffer Register 11	ADBUF11	16	16	2 or 3 PCLKB	section 35.
0008 90C8h	S12AD	A/D Data Storage Buffer Register 12	ADBUF12	16	16	2 or 3 PCLKB	section 35.
0008 90CAh	S12AD	A/D Data Storage Buffer Register 13	ADBUF13	16	16	2 or 3 PCLKB	section 35.
0008 90CCh	S12AD	A/D Data Storage Buffer Register 14	ADBUF14	16	16	2 or 3 PCLKB	section 35.
0008 90CEh	S12AD	A/D Data Storage Buffer Register 15	ADBUF15	16	16	2 or 3 PCLKB	section 35.
0008 90D0h	S12AD	A/D Data Storage Buffer Enable Register	ADBUFEN	8	8	2 or 3 PCLKB	section 35.
0008 90D2h	S12AD	A/D Data Storage Buffer Pointer Register	ADBUFPTR	8	8	2 or 3 PCLKB	section 35.
0008 90E0h	S12AD	A/D Sampling State Register 0	ADSSTR0	8	8	2 or 3 PCLKB	section 35.
0008 90E1h	S12AD	A/D Sampling State Register 1	ADSSTR1	8	8	2 or 3 PCLKB	section 35.
0008 90E2h	S12AD	A/D Sampling State Register 2	ADSSTR2	8	8	2 or 3 PCLKB	section 35.
0008 90E3h	S12AD	A/D Sampling State Register 3	ADSSTR3	8	8	2 or 3 PCLKB	section 35.
0008 90E4h	S12AD	A/D Sampling State Register 4	ADSSTR4	8	8	2 or 3 PCLKB	section 35.
0008 90E5h	S12AD	A/D Sampling State Register 5	ADSSTR5	8	8	2 or 3 PCLKB	section 35.
0008 A020h	SCI1	Serial Mode Register	SMR	8	8	2 or 3 PCLKB	section 28.
0008 A020h	SMCI1	Serial Mode Register	SMR	8	8	2 or 3 PCLKB	section 28.
0008 A021h	SCI1	Bit Rate Register	BRR	8	8	2 or 3 PCLKB	section 28.
0008 A022h	SCI1	Serial Control Register	SCR	8	8	2 or 3 PCLKB	section 28.
0008 A022h	SMCI1	Serial Control Register	SCR	8	8	2 or 3 PCLKB	section 28.
0008 A023h	SCI1	Transmit Data Register	TDR	8	8	2 or 3 PCLKB	section 28.
0008 A024h	SCI1	Serial Status Register	SSR	8	8	2 or 3 PCLKB	section 28.
0008 A024h	SMCI1	Serial Status Register	SSR	8	8	2 or 3 PCLKB	section 28.
0008 A025h	SCI1	Receive Data Register	RDR	8	8	2 or 3 PCLKB	section 28.
0008 A026h	SCI1	Smart Card Mode Register	SCMR	8	8	2 or 3 PCLKB	section 28.

Table 5.1 List of I/O Registers (Address Order) (7/23)

Address	Module Symbol	Register Name	Register Symbol	Number of Bits	Access Size	Number of Access Cycles ICLK ≥ PCLK	Reference Section
0008 A026h	SMCI1	Smart Card Mode Register	SCMR	8	8	2 or 3 PCLKB	section 28.
0008 A027h	SCI1	Serial Extended Mode Register	SEMR	8	8	2 or 3 PCLKB	section 28.
0008 A028h	SCI1	Noise Filter Setting Register	SNFR	8	8	2 or 3 PCLKB	section 28.
0008 A029h	SCI1	I^2C Mode Register 1	SIMR1	8	8	2 or 3 PCLKB	section 28.
0008 A02Ah	SCI1	I^2C Mode Register 2	SIMR2	8	8	2 or 3 PCLKB	section 28.
0008 A02Bh	SCI1	I^2C Mode Register 3	SIMR3	8	8	2 or 3 PCLKB	section 28.
0008 A02Ch	SCI1	I^2C Status Register	SISR	8	8	2 or 3 PCLKB	section 28.
0008 A02Dh	SCI1	SPI Mode Register	SPMR	8	8	2 or 3 PCLKB	section 28.
0008 A02Eh	SCI1	Transmit Data Register HL	TDRHL	16	16	4 or 5 PCLKB	section 28.
0008 A02Eh	SCI1	Transmit Data Register H	TDRH	8	8	2 or 3 PCLKB	section 28.
0008 A02Fh	SCI1	Transmit Data Register L	TDRL	8	8	2 or 3 PCLKB	section 28.
0008 A030h	SCI1	Receive Data Register HL	RDRHL	16	16	4 or 5 PCLKB	section 28.
0008 A030h	SCI1	Receive Data Register H	RDRH	8	8	2 or 3 PCLKB	section 28.
0008 A031h	SCI1	Receive Data Register L	RDRL	8	8	2 or 3 PCLKB	section 28.
0008 A032h	SCI1	Modulation Duty Register	MDDR	8	8	2 or 3 PCLKB	section 28.
0008 A0A0h	SCI5	Serial Mode Register	SMR	8	8	2 or 3 PCLKB	section 28.
0008 A0A0h	SMCI5	Serial Mode Register	SMR	8	8	2 or 3 PCLKB	section 28.
0008 A0A1h	SCI5	Bit Rate Register	BRR	8	8	2 or 3 PCLKB	section 28.
0008 A0A2h	SCI5	Serial Control Register	SCR	8	8	2 or 3 PCLKB	section 28.
0008 A0A2h	SMCI5	Serial Control Register	SCR	8	8	2 or 3 PCLKB	section 28.
0008 A0A3h	SCI5	Transmit Data Register	TDR	8	8	2 or 3 PCLKB	section 28.
0008 A0A4h	SCI5	Serial Status Register	SSR	8	8	2 or 3 PCLKB	section 28.
0008 A0A4h	SMCI5	Serial Status Register	SSR	8	8	2 or 3 PCLKB	section 28.
0008 A0A5h	SCI5	Receive Data Register	RDR	8	8	2 or 3 PCLKB	section 28.
0008 A0A6h	SCI5	Smart Card Mode Register	SCMR	8	8	2 or 3 PCLKB	section 28.
0008 A0A6h	SMCI5	Smart Card Mode Register	SCMR	8	8	2 or 3 PCLKB	section 28.
0008 A0A7h	SCI5	Serial Extended Mode Register	SEMR	8	8	2 or 3 PCLKB	section 28.
0008 A0A8h	SCI5	Noise Filter Setting Register	SNFR	8	8	2 or 3 PCLKB	section 28.
0008 A0A9h	SCI5	I^2C Mode Register 1	SIMR1	8	8	2 or 3 PCLKB	section 28.
0008 A0AAh	SCI5	I^2C Mode Register 2	SIMR2	8	8	2 or 3 PCLKB	section 28.
0008 A0ABh	SCI5	I^2C Mode Register 3	SIMR3	8	8	2 or 3 PCLKB	section 28.
0008 A0ACh	SCI5	I^2C Status Register	SISR	8	8	2 or 3 PCLKB	section 28.
0008 A0ADh	SCI5	SPI Mode Register	SPMR	8	8	2 or 3 PCLKB	section 28.
0008 A0AEh	SCI5	Transmit Data Register HL	TDRHL	16	16	4 or 5 PCLKB	section 28.
0008 A0AEh	SCI5	Transmit Data Register H	TDRH	8	8	2 or 3 PCLKB	section 28.
0008 A0AFh	SCI5	Transmit Data Register L	TDRL	8	8	2 or 3 PCLKB	section 28.
0008 A0B0h	SCI5	Receive Data Register HL	RDRHL	16	16	4 or 5 PCLKB	section 28.
0008 A0B0h	SCI5	Receive Data Register H	RDRH	8	8	2 or 3 PCLKB	section 28.
0008 A0B1h	SCI5	Receive Data Register L	RDRL	8	8	2 or 3 PCLKB	section 28.
0008 A0B2h	SCI5	Modulation Duty Register	MDDR	8	8	2 or 3 PCLKB	section 28.
0008 A0C0h	SCI6	Serial Mode Register	SMR	8	8	2 or 3 PCLKB	section 28.
0008 A0C0h	SMCI6	Serial Mode Register	SMR	8	8	2 or 3 PCLKB	section 28.
0008 A0C1h	SCI6	Bit Rate Register	BRR	8	8	2 or 3 PCLKB	section 28.
0008 A0C2h	SCI6	Serial Control Register	SCR	8	8	2 or 3 PCLKB	section 28.
0008 A0C2h	SMCI6	Serial Control Register	SCR	8	8	2 or 3 PCLKB	section 28.
0008 A0C3h	SCI6	Transmit Data Register	TDR	8	8	2 or 3 PCLKB	section 28.
0008 A0C4h	SCI6	Serial Status Register	SSR	8	8	2 or 3 PCLKB	section 28.
0008 A0C4h	SMCI6	Serial Status Register	SSR	8	8	2 or 3 PCLKB	section 28.
0008 A0C5h	SCI6	Receive Data Register	RDR	8	8	2 or 3 PCLKB	section 28.
0008 A0C6h	SCI6	Smart Card Mode Register	SCMR	8	8	2 or 3 PCLKB	section 28.
0008 A0C6h	SMCI6	Smart Card Mode Register	SCMR	8	8	2 or 3 PCLKB	section 28.

Table 5.1 List of I/O Registers (Address Order) (8/23)

Address	Module Symbol	Register Name	Register Symbol	Number of Bits	Access Size	Number of Access Cycles ICLK ≥ PCLK	Reference Section
0008 A0C7h	SCI6	Serial Extended Mode Register	SEMR	8	8	2 or 3 PCLKB	section 28.
0008 A0C8h	SCI6	Noise Filter Setting Register	SNFR	8	8	2 or 3 PCLKB	section 28.
0008 A0C9h	SCI6	I2C Mode Register 1	SIMR1	8	8	2 or 3 PCLKB	section 28.
0008 A0CAh	SCI6	I2C Mode Register 2	SIMR2	8	8	2 or 3 PCLKB	section 28.
0008 A0CBh	SCI6	I2C Mode Register 3	SIMR3	8	8	2 or 3 PCLKB	section 28.
0008 A0CCh	SCI6	I2C Status Register	SISR	8	8	2 or 3 PCLKB	section 28.
0008 A0CDh	SCI6	SPI Mode Register	SPMR	8	8	2 or 3 PCLKB	section 28.
0008 A0CEh	SCI6	Transmit Data Register HL	TDRHL	16	16	4 or 5 PCLKB	section 28.
0008 A0CEh	SCI6	Transmit Data Register H	TDRH	8	8	2 or 3 PCLKB	section 28.
0008 A0CFh	SCI6	Transmit Data Register L	TDRL	8	8	2 or 3 PCLKB	section 28.
0008 A0D0h	SCI6	Receive Data Register HL	RDRHL	16	16	4 or 5 PCLKB	section 28.
0008 A0D0h	SCI6	Receive Data Register H	RDRH	8	8	2 or 3 PCLKB	section 28.
0008 A0D1h	SCI6	Receive Data Register L	RDRL	8	8	2 or 3 PCLKB	section 28.
0008 A0D2h	SCI6	Modulation Duty Register	MDDR	8	8	2 or 3 PCLKB	section 28.
0008 B000h	CAC	CAC Control Register 0	CACR0	8	8	2 or 3 PCLKB	section 10.
0008 B001h	CAC	CAC Control Register 1	CACR1	8	8	2 or 3 PCLKB	section 10.
0008 B002h	CAC	CAC Control Register 2	CACR2	8	8	2 or 3 PCLKB	section 10.
0008 B003h	CAC	CAC Interrupt Request Enable Register	CAICR	8	8	2 or 3 PCLKB	section 10.
0008 B004h	CAC	CAC Status Register	CASTR	8	8	2 or 3 PCLKB	section 10.
0008 B006h	CAC	CAC Upper-Limit Value Setting Register	CAULVR	16	16	2 or 3 PCLKB	section 10.
0008 B008h	CAC	CAC Lower-Limit Value Setting Register	CALLVR	16	16	2 or 3 PCLKB	section 10.
0008 B00Ah	CAC	CAC Counter Buffer Register	CACNTBR	16	16	2 or 3 PCLKB	section 10.
0008 B080h	DOC	DOC Control Register	DOCR	8	8	2 or 3 PCLKB	section 36.
0008 B082h	DOC	DOC Data Input Register	DODIR	16	16	2 or 3 PCLKB	section 36.
0008 B084h	DOC	DOC Data Setting Register	DODSR	16	16	2 or 3 PCLKB	section 36.
0008 B100h	ELC	Event Link Control Register	ELCR	8	8	2 or 3 PCLKB	section 19.
0008 B102h	ELC	Event Link Setting Register 1	ELSR1	8	8	2 or 3 PCLKB	section 19.
0008 B103h	ELC	Event Link Setting Register 2	ELSR2	8	8	2 or 3 PCLKB	section 19.
0008 B104h	ELC	Event Link Setting Register 3	ELSR3	8	8	2 or 3 PCLKB	section 19.
0008 B105h	ELC	Event Link Setting Register 4	ELSR4	8	8	2 or 3 PCLKB	section 19.
0008 B108h	ELC	Event Link Setting Register 7	ELSR7	8	8	2 or 3 PCLKB	section 19.
0008 B109h	ELC	Event Link Setting Register 8	ELSR8	8	8	2 or 3 PCLKB	section 19.
0008 B10Bh	ELC	Event Link Setting Register 10	ELSR10	8	8	2 or 3 PCLKB	section 19.
0008 B10Dh	ELC	Event Link Setting Register 12	ELSR12	8	8	2 or 3 PCLKB	section 19.
0008 B110h	ELC	Event Link Setting Register 15	ELSR15	8	8	2 or 3 PCLKB	section 19.
0008 B113h	ELC	Event Link Setting Register 18	ELSR18	8	8	2 or 3 PCLKB	section 19.
0008 B114h	ELC	Event Link Setting Register 19	ELSR19	8	8	2 or 3 PCLKB	section 19.
0008 B119h	ELC	Event Link Setting Register 24	ELSR24	8	8	2 or 3 PCLKB	section 19.
0008 B11Ah	ELC	Event Link Setting Register 25	ELSR25	8	8	2 or 3 PCLKB	section 19.
0008 B11Dh	ELC	Event Link Setting Register 28	ELSR28	8	8	2 or 3 PCLKB	section 19.
0008 B11Eh	ELC	Event Link Setting Register 29	ELSR29	8	8	2 or 3 PCLKB	section 19.
0008 B11Fh	ELC	Event Link Option Setting Register A	ELOPA	8	8	2 or 3 PCLKB	section 19.
0008 B120h	ELC	Event Link Option Setting Register B	ELOPB	8	8	2 or 3 PCLKB	section 19.
0008 B121h	ELC	Event Link Option Setting Register C	ELOPC	8	8	2 or 3 PCLKB	section 19.
0008 B122h	ELC	Event Link Option Setting Register D	ELOPD	8	8	2 or 3 PCLKB	section 19.
0008 B129h	ELC	Event Link Port Setting Register 0	PEL0	8	8	2 or 3 PCLKB	section 19.
0008 B12Ah	ELC	Event Link Port Setting Register 1	PEL1	8	8	2 or 3 PCLKB	section 19.
0008 B12Dh	ELC	Event Link Software Event Generation Register	ELSEGR	8	8	2 or 3 PCLKB	section 19.
0008 B144h	ELC	Event Link Setting Register 46	ELSR46	8	8	2 or 3 PCLKB	section 19.
0008 B145h	ELC	Event Link Setting Register 47	ELSR47	8	8	2 or 3 PCLKB	section 19.
0008 B300h	SCI12	Serial Mode Register	SMR	8	8	2 or 3 PCLKB	section 28.

Table 5.1 List of I/O Registers (Address Order) (9/23)

Address	Module Symbol	Register Name	Register Symbol	Number of Bits	Access Size	Number of Access Cycles ICLK ≥ PCLK	Reference Section
0008 B300h	SMCI12	Serial Mode Register	SMR	8	8	2 or 3 PCLKB	section 28.
0008 B301h	SCI12	Bit Rate Register	BRR	8	8	2 or 3 PCLKB	section 28.
0008 B302h	SCI12	Serial Control Register	SCR	8	8	2 or 3 PCLKB	section 28.
0008 B302h	SMCI12	Serial Control Register	SCR	8	8	2 or 3 PCLKB	section 28.
0008 B303h	SCI12	Transmit Data Register	TDR	8	8	2 or 3 PCLKB	section 28.
0008 B304h	SCI12	Serial Status Register	SSR	8	8	2 or 3 PCLKB	section 28.
0008 B304h	SMCI12	Serial Status Register	SSR	8	8	2 or 3 PCLKB	section 28.
0008 B305h	SCI12	Receive Data Register	RDR	8	8	2 or 3 PCLKB	section 28.
0008 B306h	SCI12	Smart Card Mode Register	SCMR	8	8	2 or 3 PCLKB	section 28.
0008 B306h	SMCI12	Smart Card Mode Register	SCMR	8	8	2 or 3 PCLKB	section 28.
0008 B307h	SCI12	Serial Extended Mode Register	SEMR	8	8	2 or 3 PCLKB	section 28.
0008 B308h	SCI12	Noise Filter Setting Register	SNFR	8	8	2 or 3 PCLKB	section 28.
0008 B309h	SCI12	I^2C Mode Register 1	SIMR1	8	8	2 or 3 PCLKB	section 28.
0008 B30Ah	SCI12	I^2C Mode Register 2	SIMR2	8	8	2 or 3 PCLKB	section 28.
0008 B30Bh	SCI12	I^2C Mode Register 3	SIMR3	8	8	2 or 3 PCLKB	section 28.
0008 B30Ch	SCI12	I^2C Status Register	SISR	8	8	2 or 3 PCLKB	section 28.
0008 B30Dh	SCI12	SPI Mode Register	SPMR	8	8	2 or 3 PCLKB	section 28.
0008 B30Eh	SCI12	Transmit Data Register HL	TDRHL	16	16	4 or 5 PCLKB	section 28.
0008 B30Eh	SCI12	Transmit Data Register H	TDRH	8	8	2 or 3 PCLKB	section 28.
0008 B30Fh	SCI12	Transmit Data Register L	TDRL	8	8	2 or 3 PCLKB	section 28.
0008 B310h	SCI12	Receive Data Register HL	RDRHL	16	16	4 or 5 PCLKB	section 28.
0008 B310h	SCI12	Receive Data Register H	RDRH	8	8	2 or 3 PCLKB	section 28.
0008 B311h	SCI12	Receive Data Register L	RDRL	8	8	2 or 3 PCLKB	section 28.
0008 B312h	SCI12	Modulation Duty Register	MDDR	8	8	2 or 3 PCLKB	section 28.
0008 B320h	SCI12	Extended Serial Module Enable Register	ESMER	8	8	2 or 3 PCLKB	section 28.
0008 B321h	SCI12	Control Register 0	CR0	8	8	2 or 3 PCLKB	section 28.
0008 B322h	SCI12	Control Register 1	CR1	8	8	2 or 3 PCLKB	section 28.
0008 B323h	SCI12	Control Register 2	CR2	8	8	2 or 3 PCLKB	section 28.
0008 B324h	SCI12	Control Register 3	CR3	8	8	2 or 3 PCLKB	section 28.
0008 B325h	SCI12	Port Control Register	PCR	8	8	2 or 3 PCLKB	section 28.
0008 B326h	SCI12	Interrupt Control Register	ICR	8	8	2 or 3 PCLKB	section 28.
0008 B327h	SCI12	Status Register	STR	8	8	2 or 3 PCLKB	section 28.
0008 B328h	SCI12	Status Clear Register	STCR	8	8	2 or 3 PCLKB	section 28.
0008 B329h	SCI12	Control Field 0 Data Register	CF0DR	8	8	2 or 3 PCLKB	section 28.
0008 B32Ah	SCI12	Control Field 0 Compare Enable Register	CF0CR	8	8	2 or 3 PCLKB	section 28.
0008 B32Bh	SCI12	Control Field 0 Receive Data Register	CF0RR	8	8	2 or 3 PCLKB	section 28.
0008 B32Ch	SCI12	Primary Control Field 1 Data Register	PCF1DR	8	8	2 or 3 PCLKB	section 28.
0008 B32Dh	SCI12	Secondary Control Field 1 Data Register	SCF1DR	8	8	2 or 3 PCLKB	section 28.
0008 B32Eh	SCI12	Control Field 1 Compare Enable Register	CF1CR	8	8	2 or 3 PCLKB	section 28.
0008 B32Fh	SCI12	Control Field 1 Receive Data Register	CF1RR	8	8	2 or 3 PCLKB	section 28.
0008 B330h	SCI12	Timer Control Register	TCR	8	8	2 or 3 PCLKB	section 28.
0008 B331h	SCI12	Timer Mode Register	TMR	8	8	2 or 3 PCLKB	section 28.
0008 B332h	SCI12	Timer Prescaler Register	TPRE	8	8	2 or 3 PCLKB	section 28.
0008 B333h	SCI12	Timer Count Register	TCNT	8	8	2 or 3 PCLKB	section 28.
0008 C001h	PORT1	Port Direction Register	PDR	8	8	2 or 3 PCLKB	section 20.
0008 C002h	PORT2	Port Direction Register	PDR	8	8	2 or 3 PCLKB	section 20.
0008 C003h	PORT3	Port Direction Register	PDR	8	8	2 or 3 PCLKB	section 20.
0008 C00Bh	PORTB	Port Direction Register	PDR	8	8	2 or 3 PCLKB	section 20.
0008 C00Ch	PORTC	Port Direction Register	PDR	8	8	2 or 3 PCLKB	section 20.
0008 C011h	PORTH	Port Direction Register	PDR	8	8	2 or 3 PCLKB	section 20.
0008 C021h	PORT1	Port Output Data Register	PODR	8	8	2 or 3 PCLKB	section 20.

Table 5.1 List of I/O Registers (Address Order) (10/23)

Address	Module Symbol	Register Name	Register Symbol	Number of Bits	Access Size	Number of Access Cycles ICLK ≥ PCLK	Reference Section
0008 C022h	PORT2	Port Output Data Register	PODR	8	8	2 or 3 PCLKB	section 20.
0008 C023h	PORT3	Port Output Data Register	PODR	8	8	2 or 3 PCLKB	section 20.
0008 C02Bh	PORTB	Port Output Data Register	PODR	8	8	2 or 3 PCLKB	section 20.
0008 C02Ch	PORTC	Port Output Data Register	PODR	8	8	2 or 3 PCLKB	section 20.
0008 C031h	PORTH	Port Output Data Register	PODR	8	8	2 or 3 PCLKB	section 20.
0008 C041h	PORT1	Port Input Data Register	PIDR	8	8	3 or 4 PCLKB	section 20.
0008 C042h	PORT2	Port Input Data Register	PIDR	8	8	3 or 4 PCLKB	section 20.
0008 C043h	PORT3	Port Input Data Register	PIDR	8	8	3 or 4 PCLKB	section 20.
0008 C04Bh	PORTB	Port Input Data Register	PIDR	8	8	3 or 4 PCLKB	section 20.
0008 C04Ch	PORTC	Port Input Data Register	PIDR	8	8	3 or 4 PCLKB	section 20.
0008 C051h	PORTH	Port Input Data Register	PIDR	8	8	3 or 4 PCLKB	section 20.
0008 C061h	PORT1	Port Mode Register	PMR	8	8	2 or 3 PCLKB	section 20.
0008 C062h	PORT2	Port Mode Register	PMR	8	8	2 or 3 PCLKB	section 20.
0008 C063h	PORT3	Port Mode Register	PMR	8	8	2 or 3 PCLKB	section 20.
0008 C06Bh	PORTB	Port Mode Register	PMR	8	8	2 or 3 PCLKB	section 20.
0008 C06Ch	PORTC	Port Mode Register	PMR	8	8	2 or 3 PCLKB	section 20.
0008 C071h	PORTH	Port Mode Register	PMR	8	8	2 or 3 PCLKB	section 20.
0008 C083h	PORT1	Open Drain Control Register 1	ODR1	8	8, 16	2 or 3 PCLKB	section 20.
0008 C085h	PORT2	Open Drain Control Register 1	ODR1	8	8, 16	2 or 3 PCLKB	section 20.
0008 C086h	PORT3	Open Drain Control Register 0	ODR0	8	8, 16	2 or 3 PCLKB	section 20.
0008 C087h	PORT3	Open Drain Control Register 1	ODR1	8	8, 16	2 or 3 PCLKB	section 20.
0008 C096h	PORTB	Open Drain Control Register 0	ODR0	8	8, 16	2 or 3 PCLKB	section 20.
0008 C099h	PORTC	Open Drain Control Register 1	ODR1	8	8, 16	2 or 3 PCLKB	section 20.
0008 C0A2h	PORTH	Open Drain Control Register 0	ODR0	8	8, 16	2 or 3 PCLKB	section 20.
0008 C0C1h	PORT1	Pull-Up Control Register	PCR	8	8	2 or 3 PCLKB	section 20.
0008 C0C2h	PORT2	Pull-Up Control Register	PCR	8	8	2 or 3 PCLKB	section 20.
0008 C0C3h	PORT3	Pull-Up Control Register	PCR	8	8	2 or 3 PCLKB	section 20.
0008 C0CBh	PORTB	Pull-Up Control Register	PCR	8	8	2 or 3 PCLKB	section 20.
0008 C0CCh	PORTC	Pull-Up Control Register	PCR	8	8	2 or 3 PCLKB	section 20.
0008 C0D1h	PORTH	Pull-Up Control Register	PCR	8	8	2 or 3 PCLKB	section 20.
0008 C0E1h	PORT1	Drive Capacity Control Register	DSCR	8	8	2 or 3 PCLKB	section 20.
0008 C0E2h	PORT2	Drive Capacity Control Register	DSCR	8	8	2 or 3 PCLKB	section 20.
0008 C0E3h	PORT3	Drive Capacity Control Register	DSCR	8	8	2 or 3 PCLKB	section 20.
0008 C0EBh	PORTB	Drive Capacity Control Register	DSCR	8	8	2 or 3 PCLKB	section 20.
0008 C0ECh	PORTC	Drive Capacity Control Register	DSCR	8	8	2 or 3 PCLKB	section 20.
0008 C0F1h	PORTH	Drive Capacity Control Register	DSCR	8	8	2 or 3 PCLKB	section 20.
0008 C11Fh	MPC	Write-Protect Register	PWPR	8	8	2 or 3 PCLKB	section 21.
0008 C14Ch	MPC	P14 Pin Function Control Register	P14PFS	8	8	2 or 3 PCLKB	section 21.
0008 C14Dh	MPC	P15 Pin Function Control Register	P15PFS	8	8	2 or 3 PCLKB	section 21.
0008 C14Eh	MPC	P16 Pin Function Control Register	P16PFS	8	8	2 or 3 PCLKB	section 21.
0008 C14Fh	MPC	P17 Pin Function Control Register	P17PFS	8	8	2 or 3 PCLKB	section 21.
0008 C156h	MPC	P26 Pin Function Control Register	P26PFS	8	8	2 or 3 PCLKB	section 21.
0008 C157h	MPC	P27 Pin Function Control Register	P27PFS	8	8	2 or 3 PCLKB	section 21.
0008 C158h	MPC	P30 Pin Function Control Register	P30PFS	8	8	2 or 3 PCLKB	section 21.
0008 C159h	MPC	P31 Pin Function Control Register	P31PFS	8	8	2 or 3 PCLKB	section 21.
0008 C198h	MPC	PB0 Pin Function Control Register	PB0PFS	8	8	2 or 3 PCLKB	section 21.
0008 C199h	MPC	PB1 Pin Function Control Register	PB1PFS	8	8	2 or 3 PCLKB	section 21.
0008 C1A4h	MPC	PC4 Pin Function Control Register	PC4PFS	8	8	2 or 3 PCLKB	section 21.
0008 C1A5h	MPC	PC5 Pin Function Control Register	PC5PFS	8	8	2 or 3 PCLKB	section 21.
0008 C1A6h	MPC	PC6 Pin Function Control Register	PC6PFS	8	8	2 or 3 PCLKB	section 21.
0008 C1A7h	MPC	PC7 Pin Function Control Register	PC7PFS	8	8	2 or 3 PCLKB	section 21.

Table 5.1 List of I/O Registers (Address Order) (11/23)

Address	Module Symbol	Register Name	Register Symbol	Number of Bits	Access Size	Number of Access Cycles ICLK ≥ PCLK	Reference Section
0008 C1C8h	MPC	PH0 Pin Function Control Register	PH0PFS	8	8	2 or 3 PCLKB	section 21.
0008 C1C9h	MPC	PH1 Pin Function Control Register	PH1PFS	8	8	2 or 3 PCLKB	section 21.
0008 C1CAh	MPC	PH2 Pin Function Control Register	PH2PFS	8	8	2 or 3 PCLKB	section 21.
0008 C1CBh	MPC	PH3 Pin Function Control Register	PH3PFS	8	8	2 or 3 PCLKB	section 21.
0008 C290h	SYSTEM	Reset Status Register 0	RSTSR0	8	8	4 or 5 PCLKB	section 6.
0008 C291h	SYSTEM	Reset Status Register 1	RSTSR1	8	8	4 or 5 PCLKB	section 6.
0008 C293h	SYSTEM	Main Clock Oscillator Forced Oscillation Control Register	MOFCR	8	8	4 or 5 PCLKB	section 9.
0008 C297h	SYSTEM	Voltage Monitoring Circuit Control Register	LVCMPCR	8	8	4 or 5 PCLKB	section 8.
0008 C298h	SYSTEM	Voltage Detection Level Select Register	LVDLVLR	8	8	4 or 5 PCLKB	section 8.
0008 C29Ah	SYSTEM	Voltage Monitoring 1 Circuit Control Register 0	LVD1CR0	8	8	4 or 5 PCLKB	section 8.
0008 C29Bh	SYSTEM	Voltage Monitoring 2 Circuit Control Register 0	LVD2CR0	8	8	4 or 5 PCLKB	section 8.
000A 1000h	DSAD0	DSAD Operating Clock Control Register	CCR	32	32	2 or 3 PCLKB	section 34.
000A 1008h	DSAD0	DSAD Operating Mode Register	MR	32	32	2 or 3 PCLKB	section 34.
000A 1020h	DSAD0	Channel 0 Operating Mode Register	MR0	32	32	2 or 3 PCLKB	section 34.
000A 1024h	DSAD0	Channel 1 Operating Mode Register	MR1	32	32	2 or 3 PCLKB	section 34.
000A 1028h	DSAD0	Channel 2 Operating Mode Register	MR2	32	32	2 or 3 PCLKB	section 34.
000A 102Ch	DSAD0	Channel 3 Operating Mode Register	MR3	32	32	2 or 3 PCLKB	section 34.
000A 1030h	DSAD0	Channel 4 Operating Mode Register	MR4	32	32	2 or 3 PCLKB	section 34.
000A 1034h	DSAD0	Channel 5 Operating Mode Register	MR5	32	32	2 or 3 PCLKB	section 34.
000A 1040h	DSAD0	Channel 0 Control Register	CR0	32	32	2 or 3 PCLKB	section 34.
000A 1044h	DSAD0	Channel 1 Control Register	CR1	32	32	2 or 3 PCLKB	section 34.
000A 1048h	DSAD0	Channel 2 Control Register	CR2	32	32	2 or 3 PCLKB	section 34.
000A 104Ch	DSAD0	Channel 3 Control Register	CR3	32	32	2 or 3 PCLKB	section 34.
000A 1050h	DSAD0	Channel 4 Control Register	CR4	32	32	2 or 3 PCLKB	section 34.
000A 1054h	DSAD0	Channel 5 Control Register	CR5	32	32	2 or 3 PCLKB	section 34.
000A 1060h	DSAD0	A/D Conversion Start Register	ADST	32	32	2 or 3 PCLKB	section 34.
000A 1064h	DSAD0	A/D Conversion Stop Register	ADSTP	32	32	2 or 3 PCLKB	section 34.
000A 1070h	DSAD0	Data Register	DR	32	32	2 or 3 PCLKB	section 34.
000A 1090h	DSAD0	Averaged Value Data Register	AVDR	32	32	2 or 3 PCLKB	section 34.
000A 10B0h	DSAD0	Status Register	SR	32	32	2 or 3 PCLKB	section 34.
000A 10C0h	DSAD0	Channel 0 Oversampling Ratio Setting Register	OSR0	32	32	2 or 3 PCLKB	section 34.
000A 10C4h	DSAD0	Channel 1 Oversampling Ratio Setting Register	OSR1	32	32	2 or 3 PCLKB	section 34.
000A 10C8h	DSAD0	Channel 2 Oversampling Ratio Setting Register	OSR2	32	32	2 or 3 PCLKB	section 34.
000A 10CCh	DSAD0	Channel 3 Oversampling Ratio Setting Register	OSR3	32	32	2 or 3 PCLKB	section 34.
000A 10D0h	DSAD0	Channel 4 Oversampling Ratio Setting Register	OSR4	32	32	2 or 3 PCLKB	section 34.
000A 10D4h	DSAD0	Channel 5 Oversampling Ratio Setting Register	OSR5	32	32	2 or 3 PCLKB	section 34.
000A 1120h	DSAD0	Channel 0 Gain Calibration Register	GCR0	32	32	2 or 3 PCLKB	section 34.
000A 1124h	DSAD0	Channel 1 Gain Calibration Register	GCR1	32	32	2 or 3 PCLKB	section 34.
000A 1128h	DSAD0	Channel 2 Gain Calibration Register	GCR2	32	32	2 or 3 PCLKB	section 34.
000A 112Ch	DSAD0	Channel 3 Gain Calibration Register	GCR3	32	32	2 or 3 PCLKB	section 34.
000A 1130h	DSAD0	Channel 4 Gain Calibration Register	GCR4	32	32	2 or 3 PCLKB	section 34.
000A 1134h	DSAD0	Channel 5 Gain Calibration Register	GCR5	32	32	2 or 3 PCLKB	section 34.
000A 1140h	DSAD0	Channel 0 Offset Calibration Register	OFCR0	32	32	2 or 3 PCLKB	section 34.
000A 1144h	DSAD0	Channel 1 Offset Calibration Register	OFCR1	32	32	2 or 3 PCLKB	section 34.
000A 1148h	DSAD0	Channel 2 Offset Calibration Register	OFCR2	32	32	2 or 3 PCLKB	section 34.
000A 114Ch	DSAD0	Channel 3 Offset Calibration Register	OFCR3	32	32	2 or 3 PCLKB	section 34.
000A 1150h	DSAD0	Channel 4 Offset Calibration Register	OFCR4	32	32	2 or 3 PCLKB	section 34.
000A 1154h	DSAD0	Channel 5 Offset Calibration Register	OFCR5	32	32	2 or 3 PCLKB	section 34.
000A 1200h	DSAD1	DSAD Operating Clock Control Register	CCR	32	32	2 or 3 PCLKB	section 34.
000A 1208h	DSAD1	DSAD Operating Mode Register	MR	32	32	2 or 3 PCLKB	section 34.
000A 1220h	DSAD1	Channel 0 Operating Mode Register	MR0	32	32	2 or 3 PCLKB	section 34.

Table 5.1 List of I/O Registers (Address Order) (12/23)

Address	Module Symbol	Register Name	Register Symbol	Number of Bits	Access Size	Number of Access Cycles ICLK ≥ PCLK	Reference Section
000A 1224h	DSAD1	Channel 1 Operating Mode Register	MR1	32	32	2 or 3 PCLKB	section 34.
000A 1228h	DSAD1	Channel 2 Operating Mode Register	MR2	32	32	2 or 3 PCLKB	section 34.
000A 122Ch	DSAD1	Channel 3 Operating Mode Register	MR3	32	32	2 or 3 PCLKB	section 34.
000A 1230h	DSAD1	Channel 4 Operating Mode Register	MR4	32	32	2 or 3 PCLKB	section 34.
000A 1234h	DSAD1	Channel 5 Operating Mode Register	MR5	32	32	2 or 3 PCLKB	section 34.
000A 1240h	DSAD1	Channel 0 Control Register	CR0	32	32	2 or 3 PCLKB	section 34.
000A 1244h	DSAD1	Channel 1 Control Register	CR1	32	32	2 or 3 PCLKB	section 34.
000A 1248h	DSAD1	Channel 2 Control Register	CR2	32	32	2 or 3 PCLKB	section 34.
000A 124Ch	DSAD1	Channel 3 Control Register	CR3	32	32	2 or 3 PCLKB	section 34.
000A 1250h	DSAD1	Channel 4 Control Register	CR4	32	32	2 or 3 PCLKB	section 34.
000A 1254h	DSAD1	Channel 5 Control Register	CR5	32	32	2 or 3 PCLKB	section 34.
000A 1260h	DSAD1	A/D Conversion Start Register	ADST	32	32	2 or 3 PCLKB	section 34.
000A 1264h	DSAD1	A/D Conversion Stop Register	ADSTP	32	32	2 or 3 PCLKB	section 34.
000A 1270h	DSAD1	Data Register	DR	32	32	2 or 3 PCLKB	section 34.
000A 1290h	DSAD1	Averaged Value Data Register	AVDR	32	32	2 or 3 PCLKB	section 34.
000A 12B0h	DSAD1	Status Register	SR	32	32	2 or 3 PCLKB	section 34.
000A 12C0h	DSAD1	Channel 0 Oversampling Ratio Setting Register	OSR0	32	32	2 or 3 PCLKB	section 34.
000A 12C4h	DSAD1	Channel 1 Oversampling Ratio Setting Register	OSR1	32	32	2 or 3 PCLKB	section 34.
000A 12C8h	DSAD1	Channel 2 Oversampling Ratio Setting Register	OSR2	32	32	2 or 3 PCLKB	section 34.
000A 12CCh	DSAD1	Channel 3 Oversampling Ratio Setting Register	OSR3	32	32	2 or 3 PCLKB	section 34.
000A 12D0h	DSAD1	Channel 4 Oversampling Ratio Setting Register	OSR4	32	32	2 or 3 PCLKB	section 34.
000A 12D4h	DSAD1	Channel 5 Oversampling Ratio Setting Register	OSR5	32	32	2 or 3 PCLKB	section 34.
000A 1320h	DSAD1	Channel 0 Gain Calibration Register	GCR0	32	32	2 or 3 PCLKB	section 34.
000A 1324h	DSAD1	Channel 1 Gain Calibration Register	GCR1	32	32	2 or 3 PCLKB	section 34.
000A 1328h	DSAD1	Channel 2 Gain Calibration Register	GCR2	32	32	2 or 3 PCLKB	section 34.
000A 132Ch	DSAD1	Channel 3 Gain Calibration Register	GCR3	32	32	2 or 3 PCLKB	section 34.
000A 1330h	DSAD1	Channel 4 Gain Calibration Register	GCR4	32	32	2 or 3 PCLKB	section 34.
000A 1334h	DSAD1	Channel 5 Gain Calibration Register	GCR5	32	32	2 or 3 PCLKB	section 34.
000A 1340h	DSAD1	Channel 0 Offset Calibration Register	OFCR0	32	32	2 or 3 PCLKB	section 34.
000A 1344h	DSAD1	Channel 1 Offset Calibration Register	OFCR1	32	32	2 or 3 PCLKB	section 34.
000A 1348h	DSAD1	Channel 2 Offset Calibration Register	OFCR2	32	32	2 or 3 PCLKB	section 34.
000A 134Ch	DSAD1	Channel 3 Offset Calibration Register	OFCR3	32	32	2 or 3 PCLKB	section 34.
000A 1350h	DSAD1	Channel 4 Offset Calibration Register	OFCR4	32	32	2 or 3 PCLKB	section 34.
000A 1354h	DSAD1	Channel 5 Offset Calibration Register	OFCR5	32	32	2 or 3 PCLKB	section 34.
000A 1400h	AFE	AFE Operation Control Register	OPCR	16	16	2 or 3 PCLKB	section 33.
000A 1404h	AFE	Voltage Detector Control Register	VDETCR	16	16	2 or 3 PCLKB	section 33.
000A 1408h	AFE	Voltage Detection Enable Register	VDETER	16	16	2 or 3 PCLKB	section 33.
000A 140Ch	AFE	Bias Voltage Output Select Register	VBOSR	16	16	2 or 3 PCLKB	section 33.
000A 1410h	AFE	Temperature Sensor Zeroth-Order Temperature Coefficient Register	TC0R	32	32	2 or 3 PCLKB	section 33.
000A 1414h	AFE	Temperature Sensor First-Order Temperature Coefficient Register	TC1R	32	32	2 or 3 PCLKB	section 33.
000A 1418h	AFE	Temperature Sensor Second-Order Temperature Coefficient Register	TC2R	32	32	2 or 3 PCLKB	section 33.
000A 141Ch	AFE	Low-Side Switch Control Register	LSWC	8	8	2 or 3 PCLKB	section 33.
000A 1420h	AFE	DSAD0 Channel 0 Input Select Register	DS00ISR	16	16	2 or 3 PCLKB	section 33.
000A 1424h	AFE	DSAD0 Channel 1 Input Select Register	DS01ISR	16	16	2 or 3 PCLKB	section 33.
000A 1428h	AFE	DSAD0 Channel 2 Input Select Register	DS02ISR	16	16	2 or 3 PCLKB	section 33.
000A 142Ch	AFE	DSAD0 Channel 3 Input Select Register	DS03ISR	16	16	2 or 3 PCLKB	section 33.
000A 1430h	AFE	DSAD0 Channel 4 Input Select Register	DS04ISR	16	16	2 or 3 PCLKB	section 33.
000A 1434h	AFE	DSAD0 Channel 5 Input Select Register	DS05ISR	16	16	2 or 3 PCLKB	section 33.
000A 1438h	AFE	DSAD1 Channel 0 Input Select Register	DS10ISR	16	16	2 or 3 PCLKB	section 33.
000A 143Ch	AFE	DSAD1 Channel 1 Input Select Register	DS11ISR	16	16	2 or 3 PCLKB	section 33.

Table 5.1 List of I/O Registers (Address Order) (13/23)

Address	Module Symbol	Register Name	Register Symbol	Number of Bits	Access Size	Number of Access Cycles ICLK ≥ PCLK	Reference Section
000A 1440h	AFE	DSAD1 Channel 2 Input Select Register	DS12ISR	16	16	2 or 3 PCLKB	section 33.
000A 1444h	AFE	DSAD1 Channel 3 Input Select Register	DS13ISR	16	16	2 or 3 PCLKB	section 33.
000A 1448h	AFE	DSAD1 Channel 4 Input Select Register	DS14ISR	16	16	2 or 3 PCLKB	section 33.
000A 144Ch	AFE	DSAD1 Channel 5 Input Select Register	DS15ISR	16	16	2 or 3 PCLKB	section 33.
000A 1450h	AFE	Excitation Current Control Register	EXCCR	8	8	2 or 3 PCLKB	section 33.
000A 1454h	AFE	Excitation Current Output Select Register	EXCOSR	16	16	2 or 3 PCLKB	section 33.
000A 8300h	RSCAN0	Bit Configuration Register L	CFGL	16	16	2 or 3 PCLKB	section 30.
000A 8302h	RSCAN0	Bit Configuration Register H	CFGH	16	16	2 or 3 PCLKB	section 30.
000A 8304h	RSCAN0	Control Register L	CTRL	16	16	2 or 3 PCLKB	section 30.
000A 8306h	RSCAN0	Control Register H	CTRH	16	16	2 or 3 PCLKB	section 30.
000A 8308h	RSCAN0	Status Register L	STSL	16	16	2 or 3 PCLKB	section 30.
000A 830Ah	RSCAN0	Status Register H	STSH	16	16	2 or 3 PCLKB	section 30.
000A 830Ch	RSCAN0	Error Flag Register L	ERFLL	16	16	2 or 3 PCLKB	section 30.
000A 830Eh	RSCAN0	Error Flag Register H	ERFLH	16	16	2 or 3 PCLKB	section 30.
000A 8322h	RSCAN	Global Configuration Register L	GCFGL	16	16	2 or 3 PCLKB	section 30.
000A 8324h	RSCAN	Global Configuration Register H	GCFGH	16	16	2 or 3 PCLKB	section 30.
000A 8326h	RSCAN	Global Control Register L	GCTRL	16	16	2 or 3 PCLKB	section 30.
000A 8328h	RSCAN	Global Control Register H	GCTRH	16	16	2 or 3 PCLKB	section 30.
000A 832Ah	RSCAN	Global Status Register	GSTS	16	16	2 or 3 PCLKB	section 30.
000A 832Ch	RSCAN	Global Error Flag Register	GERFLL	8	8	2 or 3 PCLKB	section 30.
000A 832Eh	RSCAN	Timestamp Register	GTSC	16	16	2 or 3 PCLKB	section 30.
000A 8330h	RSCAN	Receive Rule Number Configuration Register	GAFLCFG	16	16	2 or 3 PCLKB	section 30.
000A 8332h	RSCAN	Receive Buffer Number Configuration Register	RMNB	16	16	2 or 3 PCLKB	section 30.
000A 8334h	RSCAN	Receive Buffer Receive Complete Flag Register	RMND0	16	16	2 or 3 PCLKB	section 30.
000A 8338h	RSCAN	Receive FIFO Control Register 0	RFCC0	16	16	2 or 3 PCLKB	section 30.
000A 833Ah	RSCAN	Receive FIFO Control Register 1	RFCC1	16	16	2 or 3 PCLKB	section 30.
000A 8340h	RSCAN	Receive FIFO Status Register 0	RFSTS0	16	16	2 or 3 PCLKB	section 30.
000A 8342h	RSCAN	Receive FIFO Status Register 1	RFSTS1	16	16	2 or 3 PCLKB	section 30.
000A 8348h	RSCAN	Receive FIFO Pointer Control Register 0	RFPCTR0	16	16	2 or 3 PCLKB	section 30.
000A 834Ah	RSCAN	Receive FIFO Pointer Control Register 1	RFPCTR1	16	16	2 or 3 PCLKB	section 30.
000A 8350h	RSCAN0	Transmit/Receive FIFO Control Register 0L	CFCCL0	16	16	2 or 3 PCLKB	section 30.
000A 8352h	RSCAN0	Transmit/Receive FIFO Control Register 0H	CFCCH0	16	16	2 or 3 PCLKB	section 30.
000A 8358h	RSCAN0	Transmit/Receive FIFO Status Register 0	CFSTS0	16	16	2 or 3 PCLKB	section 30.
000A 835Ch	RSCAN0	Transmit/Receive FIFO Pointer Control Register 0	CFPCTR0	16	16	2 or 3 PCLKB	section 30.
000A 8360h	RSCAN	Receive FIFO Message Lost Status Register	RFMSTS	8	8	2 or 3 PCLKB	section 30.
000A 8361h	RSCAN0	Transmit/Receive FIFO Message Lost Status Register	CFMSTS	8	8	2 or 3 PCLKB	section 30.
000A 8362h	RSCAN	Receive FIFO Interrupt Status Register	RFISTS	8	8	2 or 3 PCLKB	section 30.
000A 8363h	RSCAN	Transmit/Receive FIFO Receive Interrupt Status Register	CFISTS	8	8	2 or 3 PCLKB	section 30.
000A 8364h	RSCAN0	Transmit Buffer Control Register 0	TMC0	8	8	2 or 3 PCLKB	section 30.
000A 8365h	RSCAN0	Transmit Buffer Control Register 1	TMC1	8	8	2 or 3 PCLKB	section 30.
000A 8366h	RSCAN0	Transmit Buffer Control Register 2	TMC2	8	8	2 or 3 PCLKB	section 30.
000A 8367h	RSCAN0	Transmit Buffer Control Register 3	TMC3	8	8	2 or 3 PCLKB	section 30.
000A 836Ch	RSCAN0	Transmit Buffer Status Register 0	TMSTS0	8	8	2 or 3 PCLKB	section 30.
000A 836Dh	RSCAN0	Transmit Buffer Status Register 1	TMSTS1	8	8	2 or 3 PCLKB	section 30.
000A 836Eh	RSCAN0	Transmit Buffer Status Register 2	TMSTS2	8	8	2 or 3 PCLKB	section 30.
000A 836Fh	RSCAN0	Transmit Buffer Status Register 3	TMSTS3	8	8	2 or 3 PCLKB	section 30.
000A 8374h	RSCAN0	Transmit Buffer Transmit Request Status Register	TMTRSTS	16	16	2 or 3 PCLKB	section 30.
000A 8376h	RSCAN0	Transmit Buffer Transmit Complete Status Register	TMTCSTS	16	16	2 or 3 PCLKB	section 30.
000A 8378h	RSCAN0	Transmit Buffer Transmit Abort Status Register	TMTASTS	16	16	2 or 3 PCLKB	section 30.
000A 837Ah	RSCAN0	Transmit Buffer Interrupt Enable Register	TMIEC	16	16	2 or 3 PCLKB	section 30.
000A 837Ch	RSCAN0	Transmit History Buffer Control Register	THLCC0	16	16	2 or 3 PCLKB	section 30.

Table 5.1 List of I/O Registers (Address Order) (14/23)

Address	Module Symbol	Register Name	Register Symbol	Number of Bits	Access Size	Number of Access Cycles ICLK ≥ PCLK	Reference Section
000A 8380h	RSCAN0	Transmit History Buffer Status Register	THLSTS0	16	16	2 or 3 PCLKB	section 30.
000A 8384h	RSCAN0	Transmit History Buffer Pointer Control Register	THLPCTR0	16	16	2 or 3 PCLKB	section 30.
000A 8388h	RSCAN	Global Transmit Interrupt Status Register	GTINTSTS	16	16	2 or 3 PCLKB	section 30.
000A 838Ah	RSCAN	Global RAM Window Control Register	GRWCR	16	16	2 or 3 PCLKB	section 30.
000A 838Ch	RSCAN	Global Test Configuration Register	GTSTCFG	16	16	2 or 3 PCLKB	section 30.
000A 838Eh	RSCAN	Global Test Control Register	GTSTCTRL	8	8	2 or 3 PCLKB	section 30.
000A 8394h	RSCAN	Global Test Protection Unlock Register	GLOCKK	16	16	2 or 3 PCLKB	section 30.
000A 83A0h	RSCAN	Receive Rule Entry Register 0AL	GAFLIDL0	16	16	2 or 3 PCLKB	section 30.
000A 83A0h	RSCAN	Receive Buffer Register 0AL	RMIDL0	16	16	2 or 3 PCLKB	section 30.
000A 83A2h	RSCAN	Receive Rule Entry Register 0AH	GAFLIDH0	16	16	2 or 3 PCLKB	section 30.
000A 83A2h	RSCAN	Receive Buffer Register 0AH	RMIDH0	16	16	2 or 3 PCLKB	section 30.
000A 83A4h	RSCAN	Receive Rule Entry Register 0BL	GAFLML0	16	16	2 or 3 PCLKB	section 30.
000A 83A4h	RSCAN	Receive Buffer Register 0BL	RMTS0	16	16	2 or 3 PCLKB	section 30.
000A 83A6h	RSCAN	Receive Rule Entry Register 0BH	GAFLMH0	16	16	2 or 3 PCLKB	section 30.
000A 83A6h	RSCAN	Receive Buffer Register 0BH	RMPTR0	16	16	2 or 3 PCLKB	section 30.
000A 83A8h	RSCAN	Receive Rule Entry Register 0CL	GAFLPL0	16	16	2 or 3 PCLKB	section 30.
000A 83A8h	RSCAN	Receive Buffer Register 0CL	RMDF00	16	16	2 or 3 PCLKB	section 30.
000A 83AAh	RSCAN	Receive Rule Entry Register 0CH	GAFLPH0	16	16	2 or 3 PCLKB	section 30.
000A 83AAh	RSCAN	Receive Buffer Register 0CH	RMDF10	16	16	2 or 3 PCLKB	section 30.
000A 83ACh	RSCAN	Receive Rule Entry Register 1AL	GAFLIDL1	16	16	2 or 3 PCLKB	section 30.
000A 83ACh	RSCAN	Receive Buffer Register 0DL	RMDF20	16	16	2 or 3 PCLKB	section 30.
000A 83AEh	RSCAN	Receive Rule Entry Register 1AH	GAFLIDH1	16	16	2 or 3 PCLKB	section 30.
000A 83AEh	RSCAN	Receive Buffer Register 0DH	RMDF30	16	16	2 or 3 PCLKB	section 30.
000A 83B0h	RSCAN	Receive Rule Entry Register 1BL	GAFLML1	16	16	2 or 3 PCLKB	section 30.
000A 83B0h	RSCAN	Receive Buffer Register 1AL	RMIDL1	16	16	2 or 3 PCLKB	section 30.
000A 83B2h	RSCAN	Receive Rule Entry Register 1BH	GAFLMH1	16	16	2 or 3 PCLKB	section 30.
000A 83B2h	RSCAN	Receive Buffer Register 1AH	RMIDH1	16	16	2 or 3 PCLKB	section 30.
000A 83B4h	RSCAN	Receive Rule Entry Register 1CL	GAFLPL1	16	16	2 or 3 PCLKB	section 30.
000A 83B4h	RSCAN	Receive Buffer Register 1BL	RMTS1	16	16	2 or 3 PCLKB	section 30.
000A 83B6h	RSCAN	Receive Rule Entry Register 1CH	GAFLPH1	16	16	2 or 3 PCLKB	section 30.
000A 83B6h	RSCAN	Receive Buffer Register 1BH	RMPTR1	16	16	2 or 3 PCLKB	section 30.
000A 83B8h	RSCAN	Receive Rule Entry Register 2AL	GAFLIDL2	16	16	2 or 3 PCLKB	section 30.
000A 83B8h	RSCAN	Receive Buffer Register 1CL	RMDF01	16	16	2 or 3 PCLKB	section 30.
000A 83BAh	RSCAN	Receive Rule Entry Register 2AH	GAFLIDH2	16	16	2 or 3 PCLKB	section 30.
000A 83BAh	RSCAN	Receive Buffer Register 1CH	RMDF11	16	16	2 or 3 PCLKB	section 30.
000A 83BCh	RSCAN	Receive Rule Entry Register 2BL	GAFLML2	16	16	2 or 3 PCLKB	section 30.
000A 83BCh	RSCAN	Receive Buffer Register 1DL	RMDF21	16	16	2 or 3 PCLKB	section 30.
000A 83BEh	RSCAN	Receive Rule Entry Register 2BH	GAFLMH2	16	16	2 or 3 PCLKB	section 30.
000A 83BEh	RSCAN	Receive Buffer Register 1DH	RMDF31	16	16	2 or 3 PCLKB	section 30.
000A 83C0h	RSCAN	Receive Rule Entry Register 2CL	GAFLPL2	16	16	2 or 3 PCLKB	section 30.
000A 83C0h	RSCAN	Receive Buffer Register 2AL	RMIDL2	16	16	2 or 3 PCLKB	section 30.
000A 83C2h	RSCAN	Receive Rule Entry Register 2CH	GAFLPH2	16	16	2 or 3 PCLKB	section 30.
000A 83C2h	RSCAN	Receive Buffer Register 2AH	RMIDH2	16	16	2 or 3 PCLKB	section 30.
000A 83C4h	RSCAN	Receive Rule Entry Register 3AL	GAFLIDL3	16	16	2 or 3 PCLKB	section 30.
000A 83C4h	RSCAN	Receive Buffer Register 2BL	RMTS2	16	16	2 or 3 PCLKB	section 30.
000A 83C6h	RSCAN	Receive Rule Entry Register 3AH	GAFLIDH3	16	16	2 or 3 PCLKB	section 30.
000A 83C6h	RSCAN	Receive Buffer Register 2BH	RMPTR2	16	16	2 or 3 PCLKB	section 30.
000A 83C8h	RSCAN	Receive Rule Entry Register 3BL	GAFLML3	16	16	2 or 3 PCLKB	section 30.
000A 83C8h	RSCAN	Receive Buffer Register 2CL	RMDF02	16	16	2 or 3 PCLKB	section 30.
000A 83CAh	RSCAN	Receive Rule Entry Register 3BH	GAFLMH3	16	16	2 or 3 PCLKB	section 30.
000A 83CAh	RSCAN	Receive Buffer Register 2CH	RMDF12	16	16	2 or 3 PCLKB	section 30.

Table 5.1 List of I/O Registers (Address Order) (15/23)

Address	Module Symbol	Register Name	Register Symbol	Number of Bits	Access Size	Number of Access Cycles ICLK ≥ PCLK	Reference Section
000A 83CCh	RSCAN	Receive Rule Entry Register 3CL	GAFLPL3	16	16	2 or 3 PCLKB	section 30.
000A 83CCh	RSCAN	Receive Buffer Register 2DL	RMDF22	16	16	2 or 3 PCLKB	section 30.
000A 83CEh	RSCAN	Receive Rule Entry Register 3CH	GAFLPH3	16	16	2 or 3 PCLKB	section 30.
000A 83CEh	RSCAN	Receive Buffer Register 2DH	RMDF32	16	16	2 or 3 PCLKB	section 30.
000A 83D0h	RSCAN	Receive Rule Entry Register 4AL	GAFLIDL4	16	16	2 or 3 PCLKB	section 30.
000A 83D0h	RSCAN	Receive Buffer Register 3AL	RMIDL3	16	16	2 or 3 PCLKB	section 30.
000A 83D2h	RSCAN	Receive Rule Entry Register 4AH	GAFLIDH4	16	16	2 or 3 PCLKB	section 30.
000A 83D2h	RSCAN	Receive Buffer Register 3AH	RMIDH3	16	16	2 or 3 PCLKB	section 30.
000A 83D4h	RSCAN	Receive Rule Entry Register 4BL	GAFLML4	16	16	2 or 3 PCLKB	section 30.
000A 83D4h	RSCAN	Receive Buffer Register 3BL	RMTS3	16	16	2 or 3 PCLKB	section 30.
000A 83D6h	RSCAN	Receive Rule Entry Register 4BH	GAFLMH4	16	16	2 or 3 PCLKB	section 30.
000A 83D6h	RSCAN	Receive Buffer Register 3BH	RMPTR3	16	16	2 or 3 PCLKB	section 30.
000A 83D8h	RSCAN	Receive Rule Entry Register 4CL	GAFLPL4	16	16	2 or 3 PCLKB	section 30.
000A 83D8h	RSCAN	Receive Buffer Register 3CL	RMDF03	16	16	2 or 3 PCLKB	section 30.
000A 83DAh	RSCAN	Receive Rule Entry Register 4CH	GAFLPH4	16	16	2 or 3 PCLKB	section 30.
000A 83DAh	RSCAN	Receive Buffer Register 3CH	RMDF13	16	16	2 or 3 PCLKB	section 30.
000A 83DCh	RSCAN	Receive Rule Entry Register 5AL	GAFLIDL5	16	16	2 or 3 PCLKB	section 30.
000A 83DCh	RSCAN	Receive Buffer Register 3DL	RMDF23	16	16	2 or 3 PCLKB	section 30.
000A 83DEh	RSCAN	Receive Rule Entry Register 5AH	GAFLIDH5	16	16	2 or 3 PCLKB	section 30.
000A 83DEh	RSCAN	Receive Buffer Register 3DH	RMDF33	16	16	2 or 3 PCLKB	section 30.
000A 83E0h	RSCAN	Receive Rule Entry Register 5BL	GAFLML5	16	16	2 or 3 PCLKB	section 30.
000A 83E0h	RSCAN	Receive Buffer Register 4AL	RMIDL4	16	16	2 or 3 PCLKB	section 30.
000A 83E2h	RSCAN	Receive Rule Entry Register 5BH	GAFLMH5	16	16	2 or 3 PCLKB	section 30.
000A 83E2h	RSCAN	Receive Buffer Register 4AH	RMIDH4	16	16	2 or 3 PCLKB	section 30.
000A 83E4h	RSCAN	Receive Rule Entry Register 5CL	GAFLPL5	16	16	2 or 3 PCLKB	section 30.
000A 83E4h	RSCAN	Receive Buffer Register 4BL	RMTS4	16	16	2 or 3 PCLKB	section 30.
000A 83E6h	RSCAN	Receive Rule Entry Register 5CH	GAFLPH5	16	16	2 or 3 PCLKB	section 30.
000A 83E6h	RSCAN	Receive Buffer Register 4BH	RMPTR4	16	16	2 or 3 PCLKB	section 30.
000A 83E8h	RSCAN	Receive Rule Entry Register 6AL	GAFLIDL6	16	16	2 or 3 PCLKB	section 30.
000A 83E8h	RSCAN	Receive Buffer Register 4CL	RMDF04	16	16	2 or 3 PCLKB	section 30.
000A 83EAh	RSCAN	Receive Rule Entry Register 6AH	GAFLIDH6	16	16	2 or 3 PCLKB	section 30.
000A 83EAh	RSCAN	Receive Buffer Register 4CH	RMDF14	16	16	2 or 3 PCLKB	section 30.
000A 83ECh	RSCAN	Receive Rule Entry Register 6BL	GAFLML6	16	16	2 or 3 PCLKB	section 30.
000A 83ECh	RSCAN	Receive Buffer Register 4DL	RMDF24	16	16	2 or 3 PCLKB	section 30.
000A 83EEh	RSCAN	Receive Rule Entry Register 6BH	GAFLMH6	16	16	2 or 3 PCLKB	section 30.
000A 83EEh	RSCAN	Receive Buffer Register 4DH	RMDF34	16	16	2 or 3 PCLKB	section 30.
000A 83F0h	RSCAN	Receive Rule Entry Register 6CL	GAFLPL6	16	16	2 or 3 PCLKB	section 30.
000A 83F0h	RSCAN	Receive Buffer Register 5AL	RMIDL5	16	16	2 or 3 PCLKB	section 30.
000A 83F2h	RSCAN	Receive Rule Entry Register 6CH	GAFLPH6	16	16	2 or 3 PCLKB	section 30.
000A 83F2h	RSCAN	Receive Buffer Register 5AH	RMIDH5	16	16	2 or 3 PCLKB	section 30.
000A 83F4h	RSCAN	Receive Rule Entry Register 7AL	GAFLIDL7	16	16	2 or 3 PCLKB	section 30.
000A 83F4h	RSCAN	Receive Buffer Register 5BL	RMTS5	16	16	2 or 3 PCLKB	section 30.
000A 83F6h	RSCAN	Receive Rule Entry Register 7AH	GAFLIDH7	16	16	2 or 3 PCLKB	section 30.
000A 83F6h	RSCAN	Receive Buffer Register 5BH	RMPTR5	16	16	2 or 3 PCLKB	section 30.
000A 83F8h	RSCAN	Receive Rule Entry Register 7BL	GAFLML7	16	16	2 or 3 PCLKB	section 30.
000A 83F8h	RSCAN	Receive Buffer Register 5CL	RMDF05	16	16	2 or 3 PCLKB	section 30.
000A 83FAh	RSCAN	Receive Rule Entry Register 7BH	GAFLMH7	16	16	2 or 3 PCLKB	section 30.
000A 83FAh	RSCAN	Receive Buffer Register 5CH	RMDF15	16	16	2 or 3 PCLKB	section 30.
000A 83FCh	RSCAN	Receive Rule Entry Register 7CL	GAFLPL7	16	16	2 or 3 PCLKB	section 30.
000A 83FCh	RSCAN	Receive Buffer Register 5DL	RMDF25	16	16	2 or 3 PCLKB	section 30.
000A 83FEh	RSCAN	Receive Rule Entry Register 7CH	GAFLPH7	16	16	2 or 3 PCLKB	section 30.

Table 5.1 List of I/O Registers (Address Order) (16/23)

Address	Module Symbol	Register Name	Register Symbol	Number of Bits	Access Size	Number of Access Cycles ICLK ≥ PCLK	Reference Section
000A 83FEh	RSCAN	Receive Buffer Register 5DH	RMDF35	16	16	2 or 3 PCLKB	section 30.
000A 8400h	RSCAN	Receive Rule Entry Register 8AL	GAFLIDL8	16	16	2 or 3 PCLKB	section 30.
000A 8400h	RSCAN	Receive Buffer Register 6AL	RMIDL6	16	16	2 or 3 PCLKB	section 30.
000A 8402h	RSCAN	Receive Rule Entry Register 8AH	GAFLIDH8	16	16	2 or 3 PCLKB	section 30.
000A 8402h	RSCAN	Receive Buffer Register 6AH	RMIDH6	16	16	2 or 3 PCLKB	section 30.
000A 8404h	RSCAN	Receive Rule Entry Register 8BL	GAFLML8	16	16	2 or 3 PCLKB	section 30.
000A 8404h	RSCAN	Receive Buffer Register 6BL	RMTS6	16	16	2 or 3 PCLKB	section 30.
000A 8406h	RSCAN	Receive Rule Entry Register 8BH	GAFLMH8	16	16	2 or 3 PCLKB	section 30.
000A 8406h	RSCAN	Receive Buffer Register 6BH	RMPTR6	16	16	2 or 3 PCLKB	section 30.
000A 8408h	RSCAN	Receive Rule Entry Register 8CL	GAFLPL8	16	16	2 or 3 PCLKB	section 30.
000A 8408h	RSCAN	Receive Buffer Register 6CL	RMDF06	16	16	2 or 3 PCLKB	section 30.
000A 840Ah	RSCAN	Receive Rule Entry Register 8CH	GAFLPH8	16	16	2 or 3 PCLKB	section 30.
000A 840Ah	RSCAN	Receive Buffer Register 6CH	RMDF16	16	16	2 or 3 PCLKB	section 30.
000A 840Ch	RSCAN	Receive Rule Entry Register 9AL	GAFLIDL9	16	16	2 or 3 PCLKB	section 30.
000A 840Ch	RSCAN	Receive Buffer Register 6DL	RMDF26	16	16	2 or 3 PCLKB	section 30.
000A 840Eh	RSCAN	Receive Rule Entry Register 9AH	GAFLIDH9	16	16	2 or 3 PCLKB	section 30.
000A 840Eh	RSCAN	Receive Buffer Register 6DH	RMDF36	16	16	2 or 3 PCLKB	section 30.
000A 8410h	RSCAN	Receive Rule Entry Register 9BL	GAFLML9	16	16	2 or 3 PCLKB	section 30.
000A 8410h	RSCAN	Receive Buffer Register 7AL	RMIDL7	16	16	2 or 3 PCLKB	section 30.
000A 8412h	RSCAN	Receive Rule Entry Register 9BH	GAFLMH9	16	16	2 or 3 PCLKB	section 30.
000A 8412h	RSCAN	Receive Buffer Register 7AH	RMIDH7	16	16	2 or 3 PCLKB	section 30.
000A 8414h	RSCAN	Receive Rule Entry Register 9CL	GAFLPL9	16	16	2 or 3 PCLKB	section 30.
000A 8414h	RSCAN	Receive Buffer Register 7BL	RMTS7	16	16	2 or 3 PCLKB	section 30.
000A 8416h	RSCAN	Receive Rule Entry Register 9CH	GAFLPH9	16	16	2 or 3 PCLKB	section 30.
000A 8416h	RSCAN	Receive Buffer Register 7BH	RMPTR7	16	16	2 or 3 PCLKB	section 30.
000A 8418h	RSCAN	Receive Rule Entry Register 10AL	GAFLIDL10	16	16	2 or 3 PCLKB	section 30.
000A 8418h	RSCAN	Receive Buffer Register 7CL	RMDF07	16	16	2 or 3 PCLKB	section 30.
000A 841Ah	RSCAN	Receive Rule Entry Register 10AH	GAFLIDH10	16	16	2 or 3 PCLKB	section 30.
000A 841Ah	RSCAN	Receive Buffer Register 7CH	RMDF17	16	16	2 or 3 PCLKB	section 30.
000A 841Ch	RSCAN	Receive Rule Entry Register 10BL	GAFLML10	16	16	2 or 3 PCLKB	section 30.
000A 841Ch	RSCAN	Receive Buffer Register 7DL	RMDF27	16	16	2 or 3 PCLKB	section 30.
000A 841Eh	RSCAN	Receive Rule Entry Register 10BH	GAFLMH10	16	16	2 or 3 PCLKB	section 30.
000A 841Eh	RSCAN	Receive Buffer Register 7DH	RMDF37	16	16	2 or 3 PCLKB	section 30.
000A 8420h	RSCAN	Receive Rule Entry Register 10CL	GAFLPL10	16	16	2 or 3 PCLKB	section 30.
000A 8420h	RSCAN	Receive Buffer Register 8AL	RMIDL8	16	16	2 or 3 PCLKB	section 30.
000A 8422h	RSCAN	Receive Rule Entry Register 10CH	GAFLPH10	16	16	2 or 3 PCLKB	section 30.
000A 8422h	RSCAN	Receive Buffer Register 8AH	RMIDH8	16	16	2 or 3 PCLKB	section 30.
000A 8424h	RSCAN	Receive Rule Entry Register 11AL	GAFLIDL11	16	16	2 or 3 PCLKB	section 30.
000A 8424h	RSCAN	Receive Buffer Register 8BL	RMTS8	16	16	2 or 3 PCLKB	section 30.
000A 8426h	RSCAN	Receive Rule Entry Register 11AH	GAFLIDH11	16	16	2 or 3 PCLKB	section 30.
000A 8426h	RSCAN	Receive Buffer Register 8BH	RMPTR8	16	16	2 or 3 PCLKB	section 30.
000A 8428h	RSCAN	Receive Rule Entry Register 11BL	GAFLML11	16	16	2 or 3 PCLKB	section 30.
000A 8428h	RSCAN	Receive Buffer Register 8CL	RMDF08	16	16	2 or 3 PCLKB	section 30.
000A 842Ah	RSCAN	Receive Rule Entry Register 11BH	GAFLMH11	16	16	2 or 3 PCLKB	section 30.
000A 842Ah	RSCAN	Receive Buffer Register 8CH	RMDF18	16	16	2 or 3 PCLKB	section 30.
000A 842Ch	RSCAN	Receive Rule Entry Register 11CL	GAFLPL11	16	16	2 or 3 PCLKB	section 30.
000A 842Ch	RSCAN	Receive Buffer Register 8DL	RMDF28	16	16	2 or 3 PCLKB	section 30.
000A 842Eh	RSCAN	Receive Rule Entry Register 11CH	GAFLPH11	16	16	2 or 3 PCLKB	section 30.
000A 842Eh	RSCAN	Receive Buffer Register 8DH	RMDF38	16	16	2 or 3 PCLKB	section 30.
000A 8430h	RSCAN	Receive Rule Entry Register 12AL	GAFLIDL12	16	16	2 or 3 PCLKB	section 30.
000A 8430h	RSCAN	Receive Buffer Register 9AL	RMIDL9	16	16	2 or 3 PCLKB	section 30.

Table 5.1 List of I/O Registers (Address Order) (17/23)

Address	Module Symbol	Register Name	Register Symbol	Number of Bits	Access Size	Number of Access Cycles ICLK ≥ PCLK	Reference Section
000A 8432h	RSCAN	Receive Rule Entry Register 12AH	GAFLIDH12	16	16	2 or 3 PCLKB	section 30.
000A 8432h	RSCAN	Receive Buffer Register 9AH	RMIDH9	16	16	2 or 3 PCLKB	section 30.
000A 8434h	RSCAN	Receive Rule Entry Register 12BL	GAFLML12	16	16	2 or 3 PCLKB	section 30.
000A 8434h	RSCAN	Receive Buffer Register 9BL	RMTS9	16	16	2 or 3 PCLKB	section 30.
000A 8436h	RSCAN	Receive Rule Entry Register 12BH	GAFLMH12	16	16	2 or 3 PCLKB	section 30.
000A 8436h	RSCAN	Receive Buffer Register 9BH	RMPTR9	16	16	2 or 3 PCLKB	section 30.
000A 8438h	RSCAN	Receive Rule Entry Register 12CL	GAFLPL12	16	16	2 or 3 PCLKB	section 30.
000A 8438h	RSCAN	Receive Buffer Register 9CL	RMDF09	16	16	2 or 3 PCLKB	section 30.
000A 843Ah	RSCAN	Receive Rule Entry Register 12CH	GAFLPH12	16	16	2 or 3 PCLKB	section 30.
000A 843Ah	RSCAN	Receive Buffer Register 9CH	RMDF19	16	16	2 or 3 PCLKB	section 30.
000A 843Ch	RSCAN	Receive Rule Entry Register 13AL	GAFLIDL13	16	16	2 or 3 PCLKB	section 30.
000A 843Ch	RSCAN	Receive Buffer Register 9DL	RMDF29	16	16	2 or 3 PCLKB	section 30.
000A 843Eh	RSCAN	Receive Rule Entry Register 13AH	GAFLIDH13	16	16	2 or 3 PCLKB	section 30.
000A 843Eh	RSCAN	Receive Buffer Register 9DH	RMDF39	16	16	2 or 3 PCLKB	section 30.
000A 8440h	RSCAN	Receive Rule Entry Register 13BL	GAFLML13	16	16	2 or 3 PCLKB	section 30.
000A 8440h	RSCAN	Receive Buffer Register 10AL	RMIDL10	16	16	2 or 3 PCLKB	section 30.
000A 8442h	RSCAN	Receive Rule Entry Register 13BH	GAFLMH13	16	16	2 or 3 PCLKB	section 30.
000A 8442h	RSCAN	Receive Buffer Register 10AH	RMIDH10	16	16	2 or 3 PCLKB	section 30.
000A 8444h	RSCAN	Receive Rule Entry Register 13CL	GAFLPL13	16	16	2 or 3 PCLKB	section 30.
000A 8444h	RSCAN	Receive Buffer Register 10BL	RMTS10	16	16	2 or 3 PCLKB	section 30.
000A 8446h	RSCAN	Receive Rule Entry Register 13CH	GAFLPH13	16	16	2 or 3 PCLKB	section 30.
000A 8446h	RSCAN	Receive Buffer Register 10BH	RMPTR10	16	16	2 or 3 PCLKB	section 30.
000A 8448h	RSCAN	Receive Rule Entry Register 14AL	GAFLIDL14	16	16	2 or 3 PCLKB	section 30.
000A 8448h	RSCAN	Receive Buffer Register 10CL	RMDF010	16	16	2 or 3 PCLKB	section 30.
000A 844Ah	RSCAN	Receive Rule Entry Register 14AH	GAFLIDH14	16	16	2 or 3 PCLKB	section 30.
000A 844Ah	RSCAN	Receive Buffer Register 10CH	RMDF110	16	16	2 or 3 PCLKB	section 30.
000A 844Ch	RSCAN	Receive Rule Entry Register 14BL	GAFLML14	16	16	2 or 3 PCLKB	section 30.
000A 844Ch	RSCAN	Receive Buffer Register 10DL	RMDF210	16	16	2 or 3 PCLKB	section 30.
000A 844Eh	RSCAN	Receive Rule Entry Register 14BH	GAFLMH14	16	16	2 or 3 PCLKB	section 30.
000A 844Eh	RSCAN	Receive Buffer Register 10DH	RMDF310	16	16	2 or 3 PCLKB	section 30.
000A 8450h	RSCAN	Receive Rule Entry Register 14CL	GAFLPL14	16	16	2 or 3 PCLKB	section 30.
000A 8450h	RSCAN	Receive Buffer Register 11AL	RMIDL11	16	16	2 or 3 PCLKB	section 30.
000A 8452h	RSCAN	Receive Rule Entry Register 14CH	GAFLPH14	16	16	2 or 3 PCLKB	section 30.
000A 8452h	RSCAN	Receive Buffer Register 11AH	RMIDH11	16	16	2 or 3 PCLKB	section 30.
000A 8454h	RSCAN	Receive Rule Entry Register 15AL	GAFLIDL15	16	16	2 or 3 PCLKB	section 30.
000A 8454h	RSCAN	Receive Buffer Register 11BL	RMTS11	16	16	2 or 3 PCLKB	section 30.
000A 8456h	RSCAN	Receive Rule Entry Register 15AH	GAFLIDH15	16	16	2 or 3 PCLKB	section 30.
000A 8456h	RSCAN	Receive Buffer Register 11BH	RMPTR11	16	16	2 or 3 PCLKB	section 30.
000A 8458h	RSCAN	Receive Rule Entry Register 15BL	GAFLML15	16	16	2 or 3 PCLKB	section 30.
000A 8458h	RSCAN	Receive Buffer Register 11CL	RMDF011	16	16	2 or 3 PCLKB	section 30.
000A 845Ah	RSCAN	Receive Rule Entry Register 15BH	GAFLMH15	16	16	2 or 3 PCLKB	section 30.
000A 845Ah	RSCAN	Receive Buffer Register 11CH	RMDF111	16	16	2 or 3 PCLKB	section 30.
000A 845Ch	RSCAN	Receive Rule Entry Register 15CL	GAFLPL15	16	16	2 or 3 PCLKB	section 30.
000A 845Ch	RSCAN	Receive Buffer Register 11DL	RMDF211	16	16	2 or 3 PCLKB	section 30.
000A 845Eh	RSCAN	Receive Rule Entry Register 15CH	GAFLPH15	16	16	2 or 3 PCLKB	section 30.
000A 845Eh	RSCAN	Receive Buffer Register 11DH	RMDF311	16	16	2 or 3 PCLKB	section 30.
000A 8460h	RSCAN	Receive Buffer Register 12AL	RMIDL12	16	16	2 or 3 PCLKB	section 30.
000A 8462h	RSCAN	Receive Buffer Register 12AH	RMIDH12	16	16	2 or 3 PCLKB	section 30.
000A 8464h	RSCAN	Receive Buffer Register 12BL	RMTS12	16	16	2 or 3 PCLKB	section 30.
000A 8466h	RSCAN	Receive Buffer Register 12BH	RMPTR12	16	16	2 or 3 PCLKB	section 30.
000A 8468h	RSCAN	Receive Buffer Register 12CL	RMDF012	16	16	2 or 3 PCLKB	section 30.

Table 5.1 List of I/O Registers (Address Order) (18/23)

Address	Module Symbol	Register Name	Register Symbol	Number of Bits	Access Size	Number of Access Cycles ICLK ≥ PCLK	Reference Section
000A 846Ah	RSCAN	Receive Buffer Register 12CH	RMDF112	16	16	2 or 3 PCLKB	section 30.
000A 846Ch	RSCAN	Receive Buffer Register 12DL	RMDF212	16	16	2 or 3 PCLKB	section 30.
000A 846Eh	RSCAN	Receive Buffer Register 12DH	RMDF312	16	16	2 or 3 PCLKB	section 30.
000A 8470h	RSCAN	Receive Buffer Register 13AL	RMIDL13	16	16	2 or 3 PCLKB	section 30.
000A 8472h	RSCAN	Receive Buffer Register 13AH	RMIDH13	16	16	2 or 3 PCLKB	section 30.
000A 8474h	RSCAN	Receive Buffer Register 13BL	RMTS13	16	16	2 or 3 PCLKB	section 30.
000A 8476h	RSCAN	Receive Buffer Register 13BH	RMPTR13	16	16	2 or 3 PCLKB	section 30.
000A 8478h	RSCAN	Receive Buffer Register 13CL	RMDF013	16	16	2 or 3 PCLKB	section 30.
000A 847Ah	RSCAN	Receive Buffer Register 13CH	RMDF113	16	16	2 or 3 PCLKB	section 30.
000A 847Ch	RSCAN	Receive Buffer Register 13DL	RMDF213	16	16	2 or 3 PCLKB	section 30.
000A 847Eh	RSCAN	Receive Buffer Register 13DH	RMDF313	16	16	2 or 3 PCLKB	section 30.
000A 8480h	RSCAN	Receive Buffer Register 14AL	RMIDL14	16	16	2 or 3 PCLKB	section 30.
000A 8482h	RSCAN	Receive Buffer Register 14AH	RMIDH14	16	16	2 or 3 PCLKB	section 30.
000A 8484h	RSCAN	Receive Buffer Register 14BL	RMTS14	16	16	2 or 3 PCLKB	section 30.
000A 8486h	RSCAN	Receive Buffer Register 14BH	RMPTR14	16	16	2 or 3 PCLKB	section 30.
000A 8488h	RSCAN	Receive Buffer Register 14CL	RMDF014	16	16	2 or 3 PCLKB	section 30.
000A 848Ah	RSCAN	Receive Buffer Register 14CH	RMDF114	16	16	2 or 3 PCLKB	section 30.
000A 848Ch	RSCAN	Receive Buffer Register 14DL	RMDF214	16	16	2 or 3 PCLKB	section 30.
000A 848Eh	RSCAN	Receive Buffer Register 14DH	RMDF314	16	16	2 or 3 PCLKB	section 30.
000A 8490h	RSCAN	Receive Buffer Register 15AL	RMIDL15	16	16	2 or 3 PCLKB	section 30.
000A 8492h	RSCAN	Receive Buffer Register 15AH	RMIDH15	16	16	2 or 3 PCLKB	section 30.
000A 8494h	RSCAN	Receive Buffer Register 15BL	RMTS15	16	16	2 or 3 PCLKB	section 30.
000A 8496h	RSCAN	Receive Buffer Register 15BH	RMPTR15	16	16	2 or 3 PCLKB	section 30.
000A 8498h	RSCAN	Receive Buffer Register 15CL	RMDF015	16	16	2 or 3 PCLKB	section 30.
000A 849Ah	RSCAN	Receive Buffer Register 15CH	RMDF115	16	16	2 or 3 PCLKB	section 30.
000A 849Ch	RSCAN	Receive Buffer Register 15DL	RMDF215	16	16	2 or 3 PCLKB	section 30.
000A 849Eh	RSCAN	Receive Buffer Register 15DH	RMDF315	16	16	2 or 3 PCLKB	section 30.
000A 8580h to 000A 859Eh	RSCAN	RAM Test Register 0 to RAM Test Register 15	RPGACC0 to RPGACC15	16	16	2 or 3 PCLKB	section 30.
000A 85A0h	RSCAN	Receive FIFO Access Register 0AL	RFIDL0	16	16	2 or 3 PCLKB	section 30.
000A 85A0h	RSCAN	RAM Test Register 16	RPGACC16	16	16	2 or 3 PCLKB	section 30.
000A 85A2h	RSCAN	Receive FIFO Access Register 0AH	RFIDH0	16	16	2 or 3 PCLKB	section 30.
000A 85A2h	RSCAN	RAM Test Register 17	RPGACC17	16	16	2 or 3 PCLKB	section 30.
000A 85A4h	RSCAN	Receive FIFO Access Register 0BL	RFTS0	16	16	2 or 3 PCLKB	section 30.
000A 85A4h	RSCAN	RAM Test Register 18	RPGACC18	16	16	2 or 3 PCLKB	section 30.
000A 85A6h	RSCAN	Receive FIFO Access Register 0BH	RFPTR0	16	16	2 or 3 PCLKB	section 30.
000A 85A6h	RSCAN	RAM Test Register 19	RPGACC19	16	16	2 or 3 PCLKB	section 30.
000A 85A8h	RSCAN	Receive FIFO Access Register 0CL	RFDF00	16	16	2 or 3 PCLKB	section 30.
000A 85A8h	RSCAN	RAM Test Register 20	RPGACC20	16	16	2 or 3 PCLKB	section 30.
000A 85AAh	RSCAN	Receive FIFO Access Register 0CH	RFDF10	16	16	2 or 3 PCLKB	section 30.
000A 85AAh	RSCAN	RAM Test Register 21	RPGACC21	16	16	2 or 3 PCLKB	section 30.
000A 85ACh	RSCAN	Receive FIFO Access Register 0DL	RFDF20	16	16	2 or 3 PCLKB	section 30.
000A 85ACh	RSCAN	RAM Test Register 22	RPGACC22	16	16	2 or 3 PCLKB	section 30.
000A 85AEh	RSCAN	Receive FIFO Access Register 0DH	RFDF30	16	16	2 or 3 PCLKB	section 30.
000A 85AEh	RSCAN	RAM Test Register 23	RPGACC23	16	16	2 or 3 PCLKB	section 30.
000A 85B0h	RSCAN	Receive FIFO Access Register 1AL	RFIDL1	16	16	2 or 3 PCLKB	section 30.
000A 85B0h	RSCAN	RAM Test Register 24	RPGACC24	16	16	2 or 3 PCLKB	section 30.
000A 85B2h	RSCAN	Receive FIFO Access Register 1AH	RFIDH1	16	16	2 or 3 PCLKB	section 30.
000A 85B2h	RSCAN	RAM Test Register 25	RPGACC25	16	16	2 or 3 PCLKB	section 30.
000A 85B4h	RSCAN	Receive FIFO Access Register 1BL	RFTS1	16	16	2 or 3 PCLKB	section 30.
000A 85B4h	RSCAN	RAM Test Register 26	RPGACC26	16	16	2 or 3 PCLKB	section 30.
000A 85B6h	RSCAN	Receive FIFO Access Register 1BH	RFPTR1	16	16	2 or 3 PCLKB	section 30.

Table 5.1 List of I/O Registers (Address Order) (19/23)

Address	Module Symbol	Register Name	Register Symbol	Number of Bits	Access Size	Number of Access Cycles ICLK ≥ PCLK	Reference Section
000A 85B6h	RSCAN	RAM Test Register 27	RPGACC27	16	16	2 or 3 PCLKB	section 30.
000A 85B8h	RSCAN	Receive FIFO Access Register 1CL	RFDF01	16	16	2 or 3 PCLKB	section 30.
000A 85B8h	RSCAN	RAM Test Register 28	RPGACC28	16	16	2 or 3 PCLKB	section 30.
000A 85BAh	RSCAN	Receive FIFO Access Register 1CH	RFDF11	16	16	2 or 3 PCLKB	section 30.
000A 85BAh	RSCAN	RAM Test Register 29	RPGACC29	16	16	2 or 3 PCLKB	section 30.
000A 85BCh	RSCAN	Receive FIFO Access Register 1DL	RFDF21	16	16	2 or 3 PCLKB	section 30.
000A 85BCh	RSCAN	RAM Test Register 30	RPGACC30	16	16	2 or 3 PCLKB	section 30.
000A 85BEh	RSCAN	Receive FIFO Access Register 1DH	RFDF31	16	16	2 or 3 PCLKB	section 30.
000A 85BEh	RSCAN	RAM Test Register 31	RPGACC31	16	16	2 or 3 PCLKB	section 30.
000A 85C0h to 000A 85DEh	RSCAN	RAM Test Register 32 to RAM Test Register 47	RPGACC32 to RPGACC47	16	16	2 or 3 PCLKB	section 30.
000A 85E0h	RSCAN0	Transmit/Receive FIFO Access Register 0AL	CFIDL0	16	16	2 or 3 PCLKB	section 30.
000A 85E0h	RSCAN	RAM Test Register 48	RPGACC48	16	16	2 or 3 PCLKB	section 30.
000A 85E2h	RSCAN0	Transmit/Receive FIFO Access Register 0AH	CFIDH0	16	16	2 or 3 PCLKB	section 30.
000A 85E2h	RSCAN	RAM Test Register 49	RPGACC49	16	16	2 or 3 PCLKB	section 30.
000A 85E4h	RSCAN0	Transmit/Receive FIFO Access Register 0BL	CFTS0	16	16	2 or 3 PCLKB	section 30.
000A 85E4h	RSCAN	RAM Test Register 50	RPGACC50	16	16	2 or 3 PCLKB	section 30.
000A 85E6h	RSCAN0	Transmit/Receive FIFO Access Register 0BH	CFPTR0	16	16	2 or 3 PCLKB	section 30.
000A 85E6h	RSCAN	RAM Test Register 51	RPGACC51	16	16	2 or 3 PCLKB	section 30.
000A 85E8h	RSCAN0	Transmit/Receive FIFO Access Register 0CL	CFDF00	16	16	2 or 3 PCLKB	section 30.
000A 85E8h	RSCAN	RAM Test Register 52	RPGACC52	16	16	2 or 3 PCLKB	section 30.
000A 85EAh	RSCAN0	Transmit/Receive FIFO Access Register 0CH	CFDF10	16	16	2 or 3 PCLKB	section 30.
000A 85EAh	RSCAN	RAM Test Register 53	RPGACC53	16	16	2 or 3 PCLKB	section 30.
000A 85ECh	RSCAN0	Transmit/Receive FIFO Access Register 0DL	CFDF20	16	16	2 or 3 PCLKB	section 30.
000A 85ECh	RSCAN	RAM Test Register 54	RPGACC54	16	16	2 or 3 PCLKB	section 30.
000A 85EEh	RSCAN0	Transmit/Receive FIFO Access Register 0DH	CFDF30	16	16	2 or 3 PCLKB	section 30.
000A 85EEh	RSCAN	RAM Test Register 55	RPGACC55	16	16	2 or 3 PCLKB	section 30.
000A 85F0h to 000A 85FEh	RSCAN	RAM Test Register 56 to RAM Test Register 63	RPGACC56 to RPGACC63	16	16	2 or 3 PCLKB	section 30.
000A 8600h	RSCAN0	Transmit Buffer Register 0AL	TMIDL0	16	16	2 or 3 PCLKB	section 30.
000A 8600h	RSCAN	RAM Test Register 64	RPGACC64	16	16	2 or 3 PCLKB	section 30.
000A 8602h	RSCAN0	Transmit Buffer Register 0AH	TMIDH0	16	16	2 or 3 PCLKB	section 30.
000A 8602h	RSCAN	RAM Test Register 65	RPGACC65	16	16	2 or 3 PCLKB	section 30.
000A 8604h	RSCAN	RAM Test Register 66	RPGACC66	16	16	2 or 3 PCLKB	section 30.
000A 8606h	RSCAN0	Transmit Buffer Register 0BH	TMPTR0	16	16	2 or 3 PCLKB	section 30.
000A 8606h	RSCAN	RAM Test Register 67	RPGACC67	16	16	2 or 3 PCLKB	section 30.
000A 8608h	RSCAN0	Transmit Buffer Register 0CL	TMDF00	16	16	2 or 3 PCLKB	section 30.
000A 8608h	RSCAN	RAM Test Register 68	RPGACC68	16	16	2 or 3 PCLKB	section 30.
000A 860Ah	RSCAN0	Transmit Buffer Register 0CH	TMDF10	16	16	2 or 3 PCLKB	section 30.
000A 860Ah	RSCAN	RAM Test Register 69	RPGACC69	16	16	2 or 3 PCLKB	section 30.
000A 860Ch	RSCAN0	Transmit Buffer Register 0DL	TMDF20	16	16	2 or 3 PCLKB	section 30.
000A 860Ch	RSCAN	RAM Test Register 70	RPGACC70	16	16	2 or 3 PCLKB	section 30.
000A 860Eh	RSCAN0	Transmit Buffer Register 0DH	TMDF30	16	16	2 or 3 PCLKB	section 30.
000A 860Eh	RSCAN	RAM Test Register 71	RPGACC71	16	16	2 or 3 PCLKB	section 30.
000A 8610h	RSCAN0	Transmit Buffer Register 1AL	TMIDL1	16	16	2 or 3 PCLKB	section 30.
000A 8610h	RSCAN	RAM Test Register 72	RPGACC72	16	16	2 or 3 PCLKB	section 30.
000A 8612h	RSCAN0	Transmit Buffer Register 1AH	TMIDH1	16	16	2 or 3 PCLKB	section 30.
000A 8612h	RSCAN	RAM Test Register 73	RPGACC73	16	16	2 or 3 PCLKB	section 30.
000A 8614h	RSCAN	RAM Test Register 74	RPGACC74	16	16	2 or 3 PCLKB	section 30.
000A 8616h	RSCAN0	Transmit Buffer Register 1BH	TMPTR1	16	16	2 or 3 PCLKB	section 30.
000A 8616h	RSCAN	RAM Test Register 75	RPGACC75	16	16	2 or 3 PCLKB	section 30.
000A 8618h	RSCAN0	Transmit Buffer Register 1CL	TMDF01	16	16	2 or 3 PCLKB	section 30.

Table 5.1 List of I/O Registers (Address Order) (20/23)

Address	Module Symbol	Register Name	Register Symbol	Number of Bits	Access Size	Number of Access Cycles ICLK ≥ PCLK	Reference Section
000A 8618h	RSCAN	RAM Test Register 76	RPGACC76	16	16	2 or 3 PCLKB	section 30.
000A 861Ah	RSCAN0	Transmit Buffer Register 1CH	TMDF11	16	16	2 or 3 PCLKB	section 30.
000A 861Ah	RSCAN	RAM Test Register 77	RPGACC77	16	16	2 or 3 PCLKB	section 30.
000A 861Ch	RSCAN0	Transmit Buffer Register 1DL	TMDF21	16	16	2 or 3 PCLKB	section 30.
000A 861Ch	RSCAN	RAM Test Register 78	RPGACC78	16	16	2 or 3 PCLKB	section 30.
000A 861Eh	RSCAN0	Transmit Buffer Register 1DH	TMDF31	16	16	2 or 3 PCLKB	section 30.
000A 861Eh	RSCAN	RAM Test Register 79	RPGACC79	16	16	2 or 3 PCLKB	section 30.
000A 8620h	RSCAN0	Transmit Buffer Register 2AL	TMIDL2	16	16	2 or 3 PCLKB	section 30.
000A 8620h	RSCAN	RAM Test Register 80	RPGACC80	16	16	2 or 3 PCLKB	section 30.
000A 8622h	RSCAN0	Transmit Buffer Register 2AH	TMIDH2	16	16	2 or 3 PCLKB	section 30.
000A 8622h	RSCAN	RAM Test Register 81	RPGACC81	16	16	2 or 3 PCLKB	section 30.
000A 8624h	RSCAN	RAM Test Register 82	RPGACC82	16	16	2 or 3 PCLKB	section 30.
000A 8626h	RSCAN0	Transmit Buffer Register 2BH	TMPTR2	16	16	2 or 3 PCLKB	section 30.
000A 8626h	RSCAN	RAM Test Register 83	RPGACC83	16	16	2 or 3 PCLKB	section 30.
000A 8628h	RSCAN0	Transmit Buffer Register 2CL	TMDF02	16	16	2 or 3 PCLKB	section 30.
000A 8628h	RSCAN	RAM Test Register 84	RPGACC84	16	16	2 or 3 PCLKB	section 30.
000A 862Ah	RSCAN0	Transmit Buffer Register 2CH	TMDF12	16	16	2 or 3 PCLKB	section 30.
000A 862Ah	RSCAN	RAM Test Register 85	RPGACC85	16	16	2 or 3 PCLKB	section 30.
000A 862Ch	RSCAN0	Transmit Buffer Register 2DL	TMDF22	16	16	2 or 3 PCLKB	section 30.
000A 862Ch	RSCAN	RAM Test Register 86	RPGACC86	16	16	2 or 3 PCLKB	section 30.
000A 862Eh	RSCAN0	Transmit Buffer Register 2DH	TMDF32	16	16	2 or 3 PCLKB	section 30.
000A 862Eh	RSCAN	RAM Test Register 87	RPGACC87	16	16	2 or 3 PCLKB	section 30.
000A 8630h	RSCAN0	Transmit Buffer Register 3AL	TMIDL3	16	16	2 or 3 PCLKB	section 30.
000A 8630h	RSCAN	RAM Test Register 88	RPGACC88	16	16	2 or 3 PCLKB	section 30.
000A 8632h	RSCAN0	Transmit Buffer Register 3AH	TMIDH3	16	16	2 or 3 PCLKB	section 30.
000A 8632h	RSCAN	RAM Test Register 89	RPGACC89	16	16	2 or 3 PCLKB	section 30.
000A 8634h	RSCAN	RAM Test Register 90	RPGACC90	16	16	2 or 3 PCLKB	section 30.
000A 8636h	RSCAN0	Transmit Buffer Register 3BH	TMPTR3	16	16	2 or 3 PCLKB	section 30.
000A 8636h	RSCAN	RAM Test Register 91	RPGACC91	16	16	2 or 3 PCLKB	section 30.
000A 8638h	RSCAN0	Transmit Buffer Register 3CL	TMDF03	16	16	2 or 3 PCLKB	section 30.
000A 8638h	RSCAN	RAM Test Register 92	RPGACC92	16	16	2 or 3 PCLKB	section 30.
000A 863Ah	RSCAN0	Transmit Buffer Register 3CH	TMDF13	16	16	2 or 3 PCLKB	section 30.
000A 863Ah	RSCAN	RAM Test Register 93	RPGACC93	16	16	2 or 3 PCLKB	section 30.
000A 863Ch	RSCAN0	Transmit Buffer Register 3DL	TMDF23	16	16	2 or 3 PCLKB	section 30.
000A 863Ch	RSCAN	RAM Test Register 94	RPGACC94	16	16	2 or 3 PCLKB	section 30.
000A 863Eh	RSCAN0	Transmit Buffer Register 3DH	TMDF33	16	16	2 or 3 PCLKB	section 30.
000A 863Eh	RSCAN	RAM Test Register 95	RPGACC95	16	16	2 or 3 PCLKB	section 30.
000A 8640h to 000A 867Eh	RSCAN	RAM Test Register 96 to RAM Test Register 127	RPGACC96 to RPGACC127	16	16	2 or 3 PCLKB	section 30.
000A 8680h	RSCAN0	Transmit History Buffer Access Register	THLACC0	16	16	2 or 3 PCLKB	section 30.
000D 0A00h	MTU3	Timer Control Register	TCR	8	8	2 or 3 PCLKA	section 22.
000D 0A01h	MTU4	Timer Control Register	TCR	8	8	2 or 3 PCLKA	section 22.
000D 0A02h	MTU3	Timer Mode Register	TMDR	8	8	2 or 3 PCLKA	section 22.
000D 0A03h	MTU4	Timer Mode Register	TMDR	8	8	2 or 3 PCLKA	section 22.
000D 0A04h	MTU3	Timer I/O Control Register H	TIORH	8	8	2 or 3 PCLKA	section 22.
000D 0A05h	MTU3	Timer I/O Control Register L	TIORL	8	8	2 or 3 PCLKA	section 22.
000D 0A06h	MTU4	Timer I/O Control Register H	TIORH	8	8	2 or 3 PCLKA	section 22.
000D 0A07h	MTU4	Timer I/O Control Register L	TIORL	8	8	2 or 3 PCLKA	section 22.
000D 0A08h	MTU3	Timer Interrupt Enable Register	TIER	8	8	2 or 3 PCLKA	section 22.
000D 0A09h	MTU4	Timer Interrupt Enable Register	TIER	8	8	2 or 3 PCLKA	section 22.
000D 0A0Ah	MTU	Timer Output Master Enable Register	TOER	8	8	2 or 3 PCLKA	section 22.
000D 0A0Dh	MTU	Timer Gate Control Register	TGCR	8	8	2 or 3 PCLKA	section 22.

Table 5.1 List of I/O Registers (Address Order) (21/23)

Address	Module Symbol	Register Name	Register Symbol	Number of Bits	Access Size	Number of Access Cycles ICLK ≥ PCLK	Reference Section
000D 0A0Eh	MTU	Timer Output Control Register 1	TOCR1	8	8	2 or 3 PCLKA	section 22.
000D 0A0Fh	MTU	Timer Output Control Register 2	TOCR2	8	8	2 or 3 PCLKA	section 22.
000D 0A10h	MTU3	Timer Counter	TCNT	16	16	2 or 3 PCLKA	section 22.
000D 0A12h	MTU4	Timer Counter	TCNT	16	16	2 or 3 PCLKA	section 22.
000D 0A14h	MTU	Timer Cycle Data Register	TCDR	16	16	2 or 3 PCLKA	section 22.
000D 0A16h	MTU	Timer Dead Time Data Register	TDDR	16	16	2 or 3 PCLKA	section 22.
000D 0A18h	MTU3	Timer General Register A	TGRA	16	16	2 or 3 PCLKA	section 22.
000D 0A1Ah	MTU3	Timer General Register B	TGRB	16	16	2 or 3 PCLKA	section 22.
000D 0A1Ch	MTU4	Timer General Register A	TGRA	16	16	2 or 3 PCLKA	section 22.
000D 0A1Eh	MTU4	Timer General Register B	TGRB	16	16	2 or 3 PCLKA	section 22.
000D 0A20h	MTU	Timer Subcounters	TCNTS	16	16	2 or 3 PCLKA	section 22.
000D 0A22h	MTU	Timer Cycle Buffer Register	TCBR	16	16	2 or 3 PCLKA	section 22.
000D 0A24h	MTU3	Timer General Register C	TGRC	16	16	2 or 3 PCLKA	section 22.
000D 0A26h	MTU3	Timer General Register D	TGRD	16	16	2 or 3 PCLKA	section 22.
000D 0A28h	MTU4	Timer General Register C	TGRC	16	16	2 or 3 PCLKA	section 22.
000D 0A2Ah	MTU4	Timer General Register D	TGRD	16	16	2 or 3 PCLKA	section 22.
000D 0A2Ch	MTU3	Timer Status Register	TSR	8	8	2 or 3 PCLKA	section 22.
000D 0A2Dh	MTU4	Timer Status Register	TSR	8	8	2 or 3 PCLKA	section 22.
000D 0A30h	MTU	Timer Interrupt Skipping Set Register	TITCR	8	8	2 or 3 PCLKA	section 22.
000D 0A31h	MTU	Timer Interrupt Skipping Counters	TITCNT	8	8	2 or 3 PCLKA	section 22.
000D 0A32h	MTU	Timer Buffer Transfer Set Register	TBTER	8	8	2 or 3 PCLKA	section 22.
000D 0A34h	MTU	Timer Dead Time Enable Register	TDER	8	8	2 or 3 PCLKA	section 22.
000D 0A36h	MTU	Timer Output Level Buffer Register	TOLBR	8	8	2 or 3 PCLKA	section 22.
000D 0A38h	MTU3	Timer Buffer Operation Transfer Mode Register	TBTM	8	8	2 or 3 PCLKA	section 22.
000D 0A39h	MTU4	Timer Buffer Operation Transfer Mode Register	TBTM	8	8	2 or 3 PCLKA	section 22.
000D 0A40h	MTU4	Timer A/D Conversion Start Request Control Register	TADCR	16	16	2 or 3 PCLKA	section 22.
000D 0A44h	MTU4	Timer A/D Conversion Start Request Cycle Set Register A	TADCORA	16	16	2 or 3 PCLKA	section 22.
000D 0A46h	MTU4	Timer A/D Conversion Start Request Cycle Set Register B	TADCORB	16	16	2 or 3 PCLKA	section 22.
000D 0A48h	MTU4	Timer A/D Conversion Start Request Cycle Set Buffer Register A	TADCOBRA	16	16	2 or 3 PCLKA	section 22.
000D 0A4Ah	MTU4	Timer A/D Conversion Start Request Cycle Set Buffer Register B	TADCOBRB	16	16	2 or 3 PCLKA	section 22.
000D 0A60h	MTU	Timer Waveform Control Register	TWCR	8	8, 16	2 or 3 PCLKA	section 22.
000D 0A80h	MTU	Timer Start Register	TSTR	8	8, 16	2 or 3 PCLKA	section 22.
000D 0A81h	MTU	Timer Synchronous Register	TSYR	8	8, 16	2 or 3 PCLKA	section 22.
000D 0A84h	MTU	Timer Read/Write Enable Register	TRWER	8	8, 16	2 or 3 PCLKA	section 22.
000D 0A90h	MTU0	Noise Filter Control Register	NFCR	8	8, 16	2 or 3 PCLKA	section 22.
000D 0A91h	MTU1	Noise Filter Control Register	NFCR	8	8, 16	2 or 3 PCLKA	section 22.
000D 0A92h	MTU2	Noise Filter Control Register	NFCR	8	8, 16	2 or 3 PCLKA	section 22.
000D 0A93h	MTU3	Noise Filter Control Register	NFCR	8	8, 16	2 or 3 PCLKA	section 22.
000D 0A94h	MTU4	Noise Filter Control Register	NFCR	8	8, 16	2 or 3 PCLKA	section 22.
000D 0A95h	MTU5	Noise Filter Control Register	NFCR	8	8, 16	2 or 3 PCLKA	section 22.
000D 0B00h	MTU0	Timer Control Register	TCR	8	8	2 or 3 PCLKA	section 22.
000D 0B01h	MTU0	Timer Mode Register	TMDR	8	8	2 or 3 PCLKA	section 22.
000D 0B02h	MTU0	Timer I/O Control Register H	TIORH	8	8	2 or 3 PCLKA	section 22.
000D 0B03h	MTU0	Timer I/O Control Register L	TIORL	8	8	2 or 3 PCLKA	section 22.
000D 0B04h	MTU0	Timer Interrupt Enable Register	TIER	8	8	2 or 3 PCLKA	section 22.
000D 0B05h	MTU0	Timer Status Register	TSR	8	8	2 or 3 PCLKA	section 22.
000D 0B06h	MTU0	Timer Counter	TCNT	16	16	2 or 3 PCLKA	section 22.
000D 0B08h	MTU0	Timer General Register A	TGRA	16	16	2 or 3 PCLKA	section 22.
000D 0B0Ah	MTU0	Timer General Register B	TGRB	16	16	2 or 3 PCLKA	section 22.
000D 0B0Ch	MTU0	Timer General Register C	TGRC	16	16	2 or 3 PCLKA	section 22.

Table 5.1 List of I/O Registers (Address Order) (22/23)

Address	Module Symbol	Register Name	Register Symbol	Number of Bits	Access Size	Number of Access Cycles ICLK ≥ PCLK	Reference Section
000D 0B0Eh	MTU0	Timer General Register D	TGRD	16	16	2 or 3 PCLKA	section 22.
000D 0B20h	MTU0	Timer General Register E	TGRE	16	16	2 or 3 PCLKA	section 22.
000D 0B22h	MTU0	Timer General Register F	TGRF	16	16	2 or 3 PCLKA	section 22.
000D 0B24h	MTU0	Timer Interrupt Enable Register 2	TIER2	8	8	2 or 3 PCLKA	section 22.
000D 0B26h	MTU0	Timer Buffer Operation Transfer Mode Register	TBTM	8	8	2 or 3 PCLKA	section 22.
000D 0B80h	MTU1	Timer Control Register	TCR	8	8	2 or 3 PCLKA	section 22.
000D 0B81h	MTU1	Timer Mode Register	TMDR	8	8	2 or 3 PCLKA	section 22.
000D 0B82h	MTU1	Timer I/O Control Register	TIOR	8	8	2 or 3 PCLKA	section 22.
000D 0B84h	MTU1	Timer Interrupt Enable Register	TIER	8	8	2 or 3 PCLKA	section 22.
000D 0B85h	MTU1	Timer Status Register	TSR	8	8	2 or 3 PCLKA	section 22.
000D 0B86h	MTU1	Timer Counter	TCNT	16	16	2 or 3 PCLKA	section 22.
000D 0B88h	MTU1	Timer General Register A	TGRA	16	16	2 or 3 PCLKA	section 22.
000D 0B8Ah	MTU1	Timer General Register B	TGRB	16	16	2 or 3 PCLKA	section 22.
000D 0B90h	MTU1	Timer Input Capture Control Register	TICCR	8	8	2 or 3 PCLKA	section 22.
000D 0C00h	MTU2	Timer Control Register	TCR	8	8	2 or 3 PCLKA	section 22.
000D 0C01h	MTU2	Timer Mode Register	TMDR	8	8	2 or 3 PCLKA	section 22.
000D 0C02h	MTU2	Timer I/O Control Register	TIOR	8	8	2 or 3 PCLKA	section 22.
000D 0C04h	MTU2	Timer Interrupt Enable Register	TIER	8	8	2 or 3 PCLKA	section 22.
000D 0C05h	MTU2	Timer Status Register	TSR	8	8	2 or 3 PCLKA	section 22.
000D 0C06h	MTU2	Timer Counter	TCNT	16	16	2 or 3 PCLKA	section 22.
000D 0C08h	MTU2	Timer General Register A	TGRA	16	16	2 or 3 PCLKA	section 22.
000D 0C0Ah	MTU2	Timer General Register B	TGRB	16	16	2 or 3 PCLKA	section 22.
000D 0C80h	MTU5	Timer Counter U	TCNTU	16	16	2 or 3 PCLKA	section 22.
000D 0C82h	MTU5	Timer General Register U	TGRU	16	16	2 or 3 PCLKA	section 22.
000D 0C84h	MTU5	Timer Control Register U	TCRU	8	8	2 or 3 PCLKA	section 22.
000D 0C86h	MTU5	Timer I/O Control Register U	TIORU	8	8	2 or 3 PCLKA	section 22.
000D 0C90h	MTU5	Timer Counter V	TCNTV	16	16	2 or 3 PCLKA	section 22.
000D 0C92h	MTU5	Timer General Register V	TGRV	16	16	2 or 3 PCLKA	section 22.
000D 0C94h	MTU5	Timer Control Register V	TCRV	8	8	2 or 3 PCLKA	section 22.
000D 0C96h	MTU5	Timer I/O Control Register V	TIORV	8	8	2 or 3 PCLKA	section 22.
000D 0CA0h	MTU5	Timer Counter W	TCNTW	16	16	2 or 3 PCLKA	section 22.
000D 0CA2h	MTU5	Timer General Register W	TGRW	16	16	2 or 3 PCLKA	section 22.
000D 0CA4h	MTU5	Timer Control Register W	TCRW	8	8	2 or 3 PCLKA	section 22.
000D 0CA6h	MTU5	Timer I/O Control Register W	TIORW	8	8	2 or 3 PCLKA	section 22.
000D 0CB2h	MTU5	Timer Interrupt Enable Register	TIER	8	8	2 or 3 PCLKA	section 22.
000D 0CB4h	MTU5	Timer Start Register	TSTR	8	8	2 or 3 PCLKA	section 22.
000D 0CB6h	MTU5	Timer Compare Match Clear Register	TCNTCMPCLR	8	8	2 or 3 PCLKA	section 22.
007F C090h	FLASH	E2 DataFlash Control Register	DFLCTL	8	8	2 or 3 FCLK	section 38.
007F C100h	FLASH	Flash P/E Mode Control Register	FPMCR	8	8	2 or 3 FCLK	section 38.
007F C104h	FLASH	Flash Area Select Register	FASR	8	8	2 or 3 FCLK	section 38.
007F C108h	FLASH	Flash Processing Start Address Register L	FSARL	16	16	2 or 3 FCLK	section 38.
007F C110h	FLASH	Flash Processing Start Address Register H	FSARH	16	16	2 or 3 FCLK	section 38.
007F C114h	FLASH	Flash Control Register	FCR	8	8	2 or 3 FCLK	section 38.
007F C118h	FLASH	Flash Processing End Address Register L	FEARL	16	16	2 or 3 FCLK	section 38.
007F C120h	FLASH	Flash Processing End Address Register H	FEARH	16	16	2 or 3 FCLK	section 38.
007F C124h	FLASH	Flash Reset Register	FRESETR	8	8	2 or 3 FCLK	section 38.
007F C12Ch	FLASH	Flash Status Register 1	FSTATR1	8	8	2 or 3 FCLK	section 38.
007F C130h	FLASH	Flash Write Buffer Register 0	FWB0	16	16	2 or 3 FCLK	section 38.
007F C138h	FLASH	Flash Write Buffer Register 1	FWB1	16	16	2 or 3 FCLK	section 38.
007F C140h	FLASH	Flash Write Buffer Register 2	FWB2	16	16	2 or 3 FCLK	section 38.
007F C144h	FLASH	Flash Write Buffer Register 3	FWB3	16	16	2 or 3 FCLK	section 38.

Table 5.1 List of I/O Registers (Address Order) (23/23)

Address	Module Symbol	Register Name	Register Symbol	Number of Bits	Access Size	Number of Access Cycles ICLK ≥ PCLK	Reference Section
007F C180h	FLASH	Protection Unlock Register	FPR	8	8	2 or 3 FCLK	section 38.
007F C184h	FLASH	Protection Unlock Status Register	FPSR	8	8	2 or 3 FCLK	section 38.
007F C1C0h	FLASH	Flash Start-Up Setting Monitor Register	FSCMR	16	16	2 or 3 FCLK	section 38.
007F C1C8h	FLASH	Flash Access Window Start Address Monitor Register	FAWSMR	16	16	2 or 3 FCLK	section 38.
007F C1D0h	FLASH	Flash Access Window End Address Monitor Register	FAWEMR	16	16	2 or 3 FCLK	section 38.
007F C1D8h	FLASH	Flash Initial Setting Register	FISR	8	8	2 or 3 FCLK	section 38.
007F C1DCh	FLASH	Flash Extra Area Control Register	FEXCR	8	8	2 or 3 FCLK	section 38.
007F C1E0h	FLASH	Flash Error Address Monitor Register L	FEAML	16	16	2 or 3 FCLK	section 38.
007F C1E8h	FLASH	Flash Error Address Monitor Register H	FEAMH	16	16	2 or 3 FCLK	section 38.
007F C1F0h	FLASH	Flash Status Register 0	FSTATR0	8	8	2 or 3 FCLK	section 38.
007F C350h	FLASHCONST	Unique ID Register 0	UIDR0	32	32	2 or 3 FCLK	section 38.
007F C354h	FLASHCONST	Unique ID Register 1	UIDR1	32	32	2 or 3 FCLK	section 38.
007F C358h	FLASHCONST	Unique ID Register 2	UIDR2	32	32	2 or 3 FCLK	section 38.
007F C35Ch	FLASHCONST	Unique ID Register 3	UIDR3	32	32	2 or 3 FCLK	section 38.
007F FFB2h	FLASH	Flash P/E Mode Entry Register	FENTRYR	16	16	2 or 3 FCLK	section 38.
FFFF FF80h	OFSM	Endian Select Register	MDE	32	32	1 ICLK	section 7.
FFFF FF88h	OFSM	Option Function Select Register 1	OFS1	32	32	1 ICLK	section 7.
FFFF FF8Ch	OFSM	Option Function Select Register 0	OFS0	32	32	1 ICLK	section 7.

Note 1. Odd addresses cannot be accessed in 16-bit units. Table 24.4 lists register allocation for 16-bit access.

6. Resets

6.1 Overview

The following resets are implemented: RES# pin reset, power-on reset, voltage monitoring 0 reset, voltage monitoring 1 reset, voltage monitoring 2 reset, independent watchdog timer reset, and software reset.
Table 6.1 lists the reset names and sources.

Table 6.1 Reset Names and Sources

Reset Name	Source
RES# pin reset	Voltage input to the RES# pin is driven low.
Power-on reset	VCC rises (voltage monitored: VPOR)*1
Voltage monitoring 0 reset	VCC falls (voltage monitored: Vdet0)*1
Voltage monitoring 1 reset	VCC falls (voltage monitored: Vdet1)*1
Voltage monitoring 2 reset	VCC falls (voltage monitored: Vdet2)*1
Independent watchdog timer reset	The independent watchdog timer underflows, or a refresh error occurs.
Software reset	Register setting

Note 1. For the voltages to be monitored (VPOR, Vdet0, Vdet1, and Vdet2), see section 8, Voltage Detection Circuit (LVDAb) and section 39, Electrical Characteristics.

The internal state and pins are initialized by a reset.
Table 6.2 lists the reset targets to be initialized.

Table 6.2 Targets Initialized by Each Reset Source

Target to be Initialized	Reset Source						
	RES# Pin Reset	Power-On Reset	Voltage Monitoring 0 Reset	Independent Watchdog Timer Reset	Voltage Monitoring 1 Reset	Voltage Monitoring 2 Reset	Software Reset
The power-on reset detect flag (RSTSR0.PORF)	✓	—	—	—	—	—	—
Register related to the cold start/warm start determination flag (RSTSR1.CWSF)	—*1	✓	—	—	—	—	—
Voltage monitoring 0 reset detect flag (RSTSR0.LVD0RF)	✓	✓	—	—	—	—	—
The independent watchdog timer reset detect flag (RSTSR2.IWDTRF)	✓	✓	✓	—	—	—	—
Registers related to the independent watchdog timer (IWDTRR, IWDTCR, IWDTSR, IWDTRCR, IWDTCSTPR, ILOCOCR)	✓	✓	✓	—	—	—	—
The voltage monitoring 1 reset detect flag (RSTSR0.LVD1RF)	✓	✓	✓	✓	—	—	—
Registers related to voltage monitor function 1 (LVD1CR0, LVCMPCR.LVD1E, LVDLVLR.LVD1LVL[3:0])	✓	✓	✓	✓	—	—	—
(LVD1CR1, LVD1SR)	✓	✓	✓	✓	—	—	—
The voltage monitoring 2 reset detect flag (RSTSR0.LVD2RF)	✓	✓	✓	✓	✓	—	—
Registers related to voltage monitor function 2 (LVD2CR0, LVD2E, LVDLVLR.LVD2LVL[1:0])	✓	✓	✓	✓	✓	—	—
(LVD2CR1, LVD2SR)	✓	✓	✓	✓	✓	—	—
The software reset detect flag (RSTSR2.SWRF)	✓	✓	✓	✓	✓	✓	—
Operating mode*2	✓	✓	—	—	—	—	—
Registers other than the above, CPU, and internal state	✓	✓	✓	✓	✓	✓	✓

✓: Targets to be initialized, —: No change occurs.
Note 1. Initialized at a power-on.
Note 2. The operating mode is determined by the level of the mode setting pin when the reset is released. For details, refer to section 3, Operating Modes.

When the CPU is released from the reset state, the reset exception handling starts. For the reset exception handling, see section 13, Exception Handling.
Table 6.3 lists the pin related to the reset.

Table 6.3 Pin Related to Reset

Pin Name	I/O	Function
RES#	Input	Reset pin

6.2 Register Descriptions

6.2.1 Reset Status Register 0 (RSTSR0)

Address(es): 0008 C290h

	b7	b6	b5	b4	b3	b2	b1	b0
	—	—	—	—	LVD2RF	LVD1RF	LVD0RF	PORF
Value after reset:	0	0	0	0	0*1	0*1	0*1	0*1

Bit	Symbol	Bit Name	Description	R/W
b0	PORF	Power-On Reset Detect Flag	0: Power-on reset not detected. 1: Power-on reset detected.	R/(W) *2
b1	LVD0RF	Voltage Monitoring 0 Reset Detect Flag	0: Voltage monitoring 0 reset not detected. 1: Voltage monitoring 0 reset detected.	R/(W) *2
b2	LVD1RF	Voltage Monitoring 1 Reset Detect Flag	0: Voltage monitoring 1 reset not detected. 1: Voltage monitoring 1 reset detected.	R/(W) *2
b3	LVD2RF	Voltage Monitoring 2 Reset Detect Flag	0: Voltage monitoring 2 reset not detected. 1: Voltage monitoring 2 reset detected.	R/(W) *2
b7 to b4	—	Reserved	These bits are read as 0. The write value should be 0.	R/W

Note 1. The value after reset depends on the reset source.
Note 2. Only 0 can be written to clear the flag.

PORF Flag (Power-On Reset Detect Flag)

The PORF flag indicates that a power-on reset has occurred.

[Setting condition]

- When a power-on reset occurs.

[Clearing conditions]

- When resets shown in Table 6.2 occur.
- When PORF is read as 1 and then 0 is written to PORF.

LVD0RF Flag (Voltage Monitoring 0 Reset Detect Flag)

The LVD0RF flag indicates that VCC voltage has fallen below Vdet0.

[Setting condition]

- When Vdet0-level VCC voltage is detected.

[Clearing conditions]

- When resets listed in Table 6.2 occur.
- When LVD0RF is read as 1 and then 0 is written to LVD0RF.

LVD1RF Flag (Voltage Monitoring 1 Reset Detect Flag)

The LVD1RF flag indicates that VCC voltage has fallen below Vdet1.

[Setting condition]

- When Vdet1-level VCC voltage is detected.

[Clearing conditions]

- When a reset listed in Table 6.2 occurs.
- When LVD1RF is read as 1 and then 0 is written to LVD1RF.

LVD2RF Flag (Voltage Monitoring 2 Reset Detect Flag)

The LVD2RF flag indicates that VCC voltage has fallen below Vdet2.

[Setting condition]

- When Vdet2-level VCC voltage is detected.

[Clearing conditions]

- When a reset listed in Table 6.2 occurs.
- When LVD2RF is read as 1 and then 0 is written to LVD2RF.

6.2.2 Reset Status Register 1 (RSTSR1)

Address(es): 0008 C291h

	b7	b6	b5	b4	b3	b2	b1	b0
	—	—	—	—	—	—	—	CWSF
Value after reset:	0	0	0	0	0	0	0	0/1*1

Bit	Symbol	Bit Name	Description	R/W
b0	CWSF	Cold/Warm Start Determination Flag	0: Cold start 1: Warm start	R/(W)*2
b7 to b1	—	Reserved	These bits are read as 0. The write value should be 0.	R/W

Note 1. The value after reset depends on the reset source.
Note 2. Only 1 can be written to set the flag.

RSTSR1 determines whether a power-on reset has caused the reset processing (cold start) or a reset signal input during operation has caused the reset processing (warm start).

CWSF Flag (Cold/Warm Start Determination Flag)

The CWSF flag indicates the type of reset processing: cold start or warm start.

The CWSF flag is initialized at a power-on.

[Setting condition]

- When 1 is written through programming; it is not set to 0 even when 0 is written.

[Clearing condition]

- When a reset listed in Table 6.2 occurs.

6.2.3 Reset Status Register 2 (RSTSR2)

Address(es): 0008 00C0h

	b7	b6	b5	b4	b3	b2	b1	b0
	—	—	—	—	—	SWRF	—	IWDTRF
Value after reset:	0	0	0	0	0	0*1	0	0*1

Bit	Symbol	Bit Name	Description	R/W
b0	IWDTRF	Independent Watchdog Timer Reset Detect Flag	0: Independent watchdog timer reset not detected. 1: Independent watchdog timer reset detected.	R/(W) *2
b1	—	Reserved	This bit is read as 0. The write value should be 0.	R/W
b2	SWRF	Software Reset Detect Flag	0: Software reset not detected. 1: Software reset detected.	R/(W) *2
b7 to b3	—	Reserved	These bits are read as 0. The write value should be 0.	R/W

Note 1. The value after reset depends on the reset source.
Note 2. Only 0 can be written to clear the flag.

IWDTRF Flag (Independent Watchdog Timer Reset Detect Flag)

The IWDTRF flag indicates that an independent watchdog timer reset has occurred.

[Setting condition]

- When an independent watchdog timer reset occurs.

[Clearing conditions]

- When a reset listed in Table 6.2 occurs.
- When IWDTRF is read as 1 and then 0 is written to IWDTRF.

SWRF Flag (Software Reset Detect Flag)

The SWRF flag indicates that a software reset has occurred.

[Setting condition]

- When a software reset occurs.

[Clearing conditions]

- When a reset listed in Table 6.2 occurs.
- When SWRF is read as 1 and then 0 is written to SWRF.

6.2.4 Software Reset Register (SWRR)

Address(es): 0008 00C2h

	b15	b14	b13	b12	b11	b10	b9	b8	b7	b6	b5	b4	b3	b2	b1	b0
	SWRR[15:0]															
Value after reset:	0	0	0	0	0	0	0	0	0	0	0	0	0	0	0	0

Bit	Symbol	Bit Name	Description	R/W
b15 to b0	SWRR[15:0]	Software Reset	Writing A501h resets the MCU. These bits are read as 0000h.	R/W

Note: Set the PRCR.PRC1 bit to 1 (write enabled) before rewriting this register.

6.3 Operation

6.3.1 RES# Pin Reset

This is a reset generated by the RES# pin.
When the RES# pin is driven low, all the processing in progress is aborted and the MCU enters a reset state.
In order to unfailingly reset the MCU, the RES# pin should be held low for the specified power supply stabilization time at a power-on.
When the RES# pin is driven high from low, the CPU is released from the internal reset state after the post-RES# release wait time (tRESWT) has elapsed and then starts the reset exception handling.
For details, see section 39, Electrical Characteristics.

6.3.2 Power-On Reset and Voltage Monitoring 0 Reset

The power-on reset is an internal reset generated by the power-on reset circuit. A power-on reset is generated when power is supplied to the RES# pin while it is connected to VCC via a resistor. When connecting a capacitor to the RES# pin, also ensure that the voltage on the RES# pin is always at least VIH. For details on VIH, refer to section 39, Electrical Characteristics. After VCC has exceeded VPOR and the specified period (power-on reset time) has elapsed, the CPU is released from the internal reset state and starts the reset exception handling. The power-on reset time is a stabilization period for the external power supply and the MCU circuit. After a power-on reset has been generated, the PORF flag in RSTSR0 is set to 1. The PORF flag is initialized by RES# pin reset.
The voltage monitoring 0 reset is an internal reset generated by the voltage monitoring circuit. If the voltage detection circuit 0 start bit (LVDAS) in option function select register 1 (OFS1) is 0 (voltage monitoring 0 reset is enabled after a reset) and VCC falls below Vdet0, the RSTSR0.LVD0RF flag becomes 1 and the voltage detection circuit generates voltage monitoring 0 reset. Clear the OFS1.LVDAS bit to 0 if the voltage monitoring 0 reset is to be used.
Release from the voltage monitoring 0 reset state occurs when VCC rises above Vdet0 and the LVD0 reset time (tLVD0) elapses, and then the CPU starts the reset exception handling.
Figure 6.1 shows operations during a power-on reset and voltage monitoring 0 reset.
For details on voltage monitoring 0 reset, refer to section 8, Voltage Detection Circuit (LVDAb).

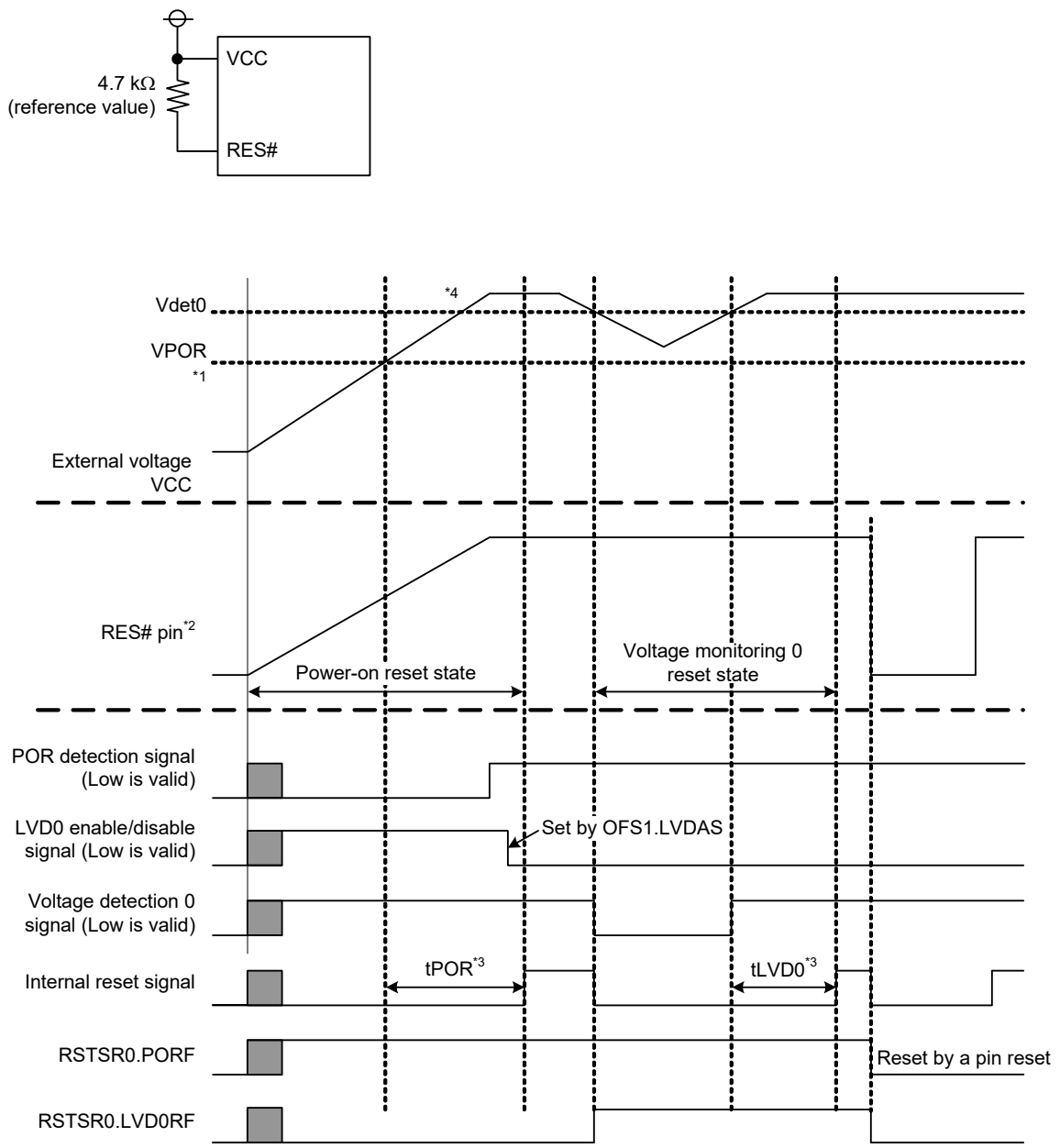

Note: For details on the electrical characteristics, see the Electrical Characteristics section.
Note 1. Vdet0 indicates the detection level for a voltage monitoring 0 reset and VPOR indicates the detection level for a power-on reset.
Note 2. Ensure that the voltage on the RES# pin is always at least VIH.
Note 3. tPOR indicates the period of a power-on reset and tLVD0 indicates the period of a voltage monitoring 0 reset.
Note 4. At the time the power-supply voltage rises, VCC must rise to at least the minimum guaranteed voltage before release from the POR reset state.

Figure 6.1 Operation Examples During a Power-On Reset and Voltage Monitoring 0 Reset

6.3.3 Voltage Monitoring 1 Reset and Voltage Monitoring 2 Reset

The voltage monitoring 1 reset and voltage monitoring 2 reset are internal resets generated by the voltage monitoring circuit.

When the voltage monitoring 1 interrupt/reset enable bit (LVD1RIE) is set to 1 (enabling generation of a reset or interrupt by the voltage detection circuit) and the voltage monitoring 1 circuit mode select bit (LVD1RI) is set to 1 (selecting generation of a reset in response to detection of a low voltage) in the voltage monitoring 1 circuit control register 0 (LVD1CR0), the RSTSR0.LVD1RF flag is set to 1 and the voltage-detection circuit generates a voltage monitoring 1 reset if VCC falls to or below Vdet1.

Likewise, when the voltage monitoring 2 interrupt/reset enable bit (LVD2RIE) is set to 1 (enabling generation of a reset or interrupt by the voltage detection circuit) and the voltage monitoring 2 circuit mode select bit (LVD2RI) is set to 1 (selecting generation of a reset in response to detection of a low voltage) in voltage monitoring 2 circuit control register 0 (LVD2CR0), the RSTSR0.LVD2RF flag is set to 1 and the voltage detection circuit generates a voltage monitoring 2 reset if VCC falls to or below Vdet2.

Timing for release from the voltage monitoring 1 reset state is selectable with the voltage monitoring 1 reset negation select bit (LVD1RN) in the LVD1CR0 register. When the LVD1CR0.LVD1RN bit is 0 and VCC has fallen to or below Vdet1, the CPU is released from the internal reset state and starts reset exception handling once the voltage monitoring 1 reset time (tLVD1) has elapsed after VCC has risen above Vdet1. When the LVD1CR0.LVD1RN bit is 1 and VCC has fallen to or below Vdet1, the CPU is released from the internal reset state and starts reset exception handling once the voltage monitoring 1 reset time (tLVD1) has elapsed.

Likewise, timing for release from the voltage monitoring 2 reset state is selectable by setting the voltage monitoring 2 reset negation select bit (LVD2RN) in the LVD2CR0 register. Detection levels Vdet1 and Vdet2 can be changed by settings in the voltage detection level select register (LVDLVLR).

Figure 6.2 shows examples of operations during voltage monitoring 1 and 2 resets.

For details on the voltage monitoring 1 reset and voltage monitoring 2 reset, refer to section 8, Voltage Detection Circuit (LVDAb).

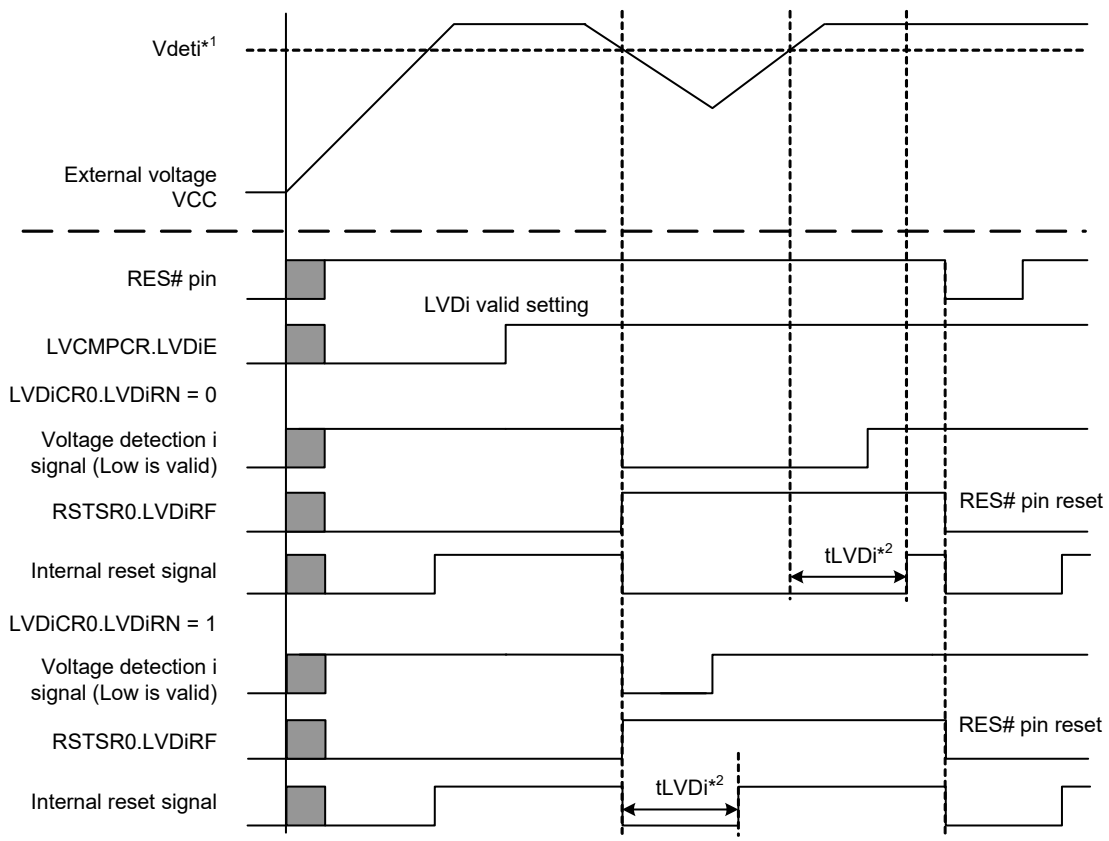

Note: For details on the electrical characteristics, see the Electrical Characteristics section.
Note 1. Vdeti shows a detection level of voltage monitoring 1 reset and voltage monitoring 2 reset. (i = 1, 2)
Note 2. tLVDi shows a time for voltage monitoring 1 reset and voltage monitoring 2 reset. (i = 1, 2)

Figure 6.2 Operation Examples During Voltage Monitoring 1 Reset and Voltage Monitoring 2 Reset

6.3.4 Independent Watchdog Timer Reset

Independent watchdog timer reset is an internal reset generated by the independent watchdog timer.
Output of the independent watchdog timer reset from the independent watchdog timer can be selected by setting the IWDT reset control register (IWDTRCR) and option function select register 0 (OFS0).
When output of the independent watchdog timer reset is selected, an independent watchdog timer reset is generated if the independent watchdog timer underflows, or if data is written outside the refresh-permitted period. When the internal reset time (tRESW2) has elapsed after the independent watchdog timer reset has been generated, the CPU is released from the internal reset state and starts the reset exception handling.
For details on the independent watchdog timer reset, see section 27, Independent Watchdog Timer (IWDTa).

6.3.5 Software Reset

The software reset is an internal reset generated by the software reset circuit.
When A501h is written to SWRR, a software reset is generated. When the internal reset time (tRESW2) has elapsed after the software reset is generated, the CPU is released from the internal reset state and starts the reset exception handling.

6.3.6 Determination of Cold/Warm Start

By reading the CWSF flag in RSTSR1, the type of reset processing caused can be identified; that is, whether a power-on reset has caused the reset processing (cold start) or a reset signal input during operation has caused the reset processing (warm start).

The CWSF flag in RSTSR1 is set to 0 when a power-on reset occurs (cold start); otherwise the flag is not set to 0. The flag is set to 1 when 1 is written to it through programming; it is not set to 0 even when 0 is written.

Figure 6.3 shows an example of cold/warm start determination operation.

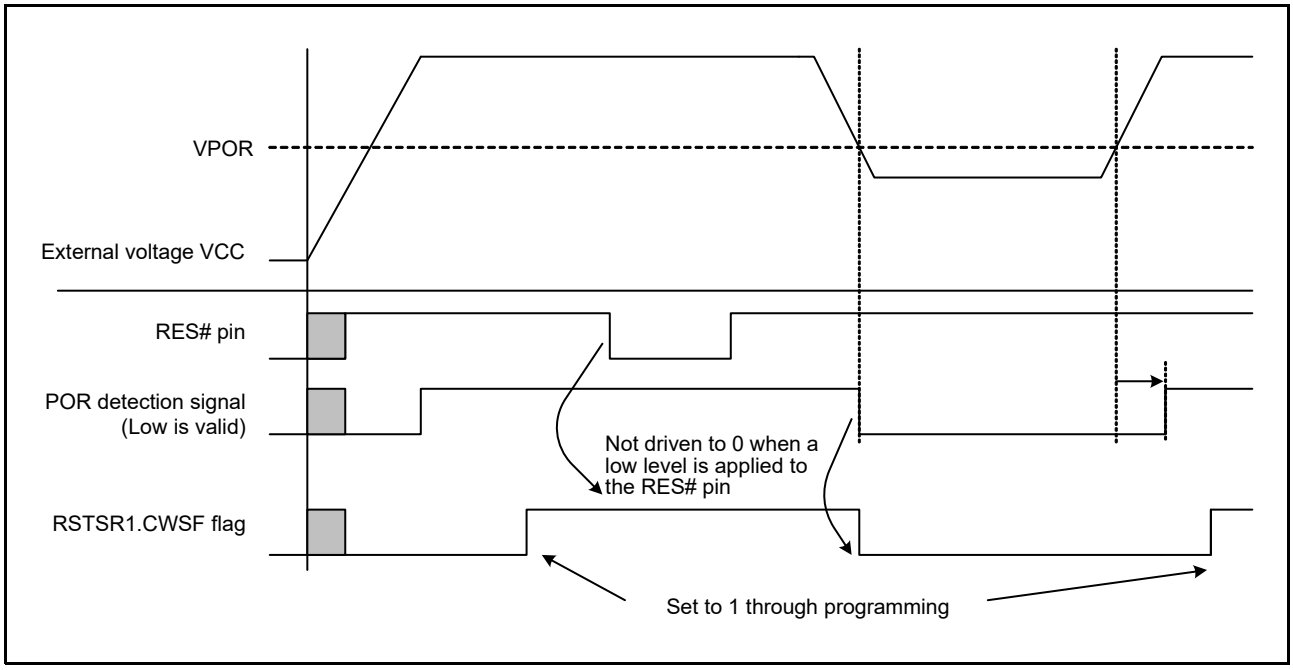

Figure 6.3 Example of Cold/Warm Start Determination Operation

6.3.7 Determination of Reset Generation Source

Reading RSTSR0 and RSTSR2 determines which reset was used to execute the reset exception handling.
Figure 6.4 shows an example of the flow to identify a reset generation source.

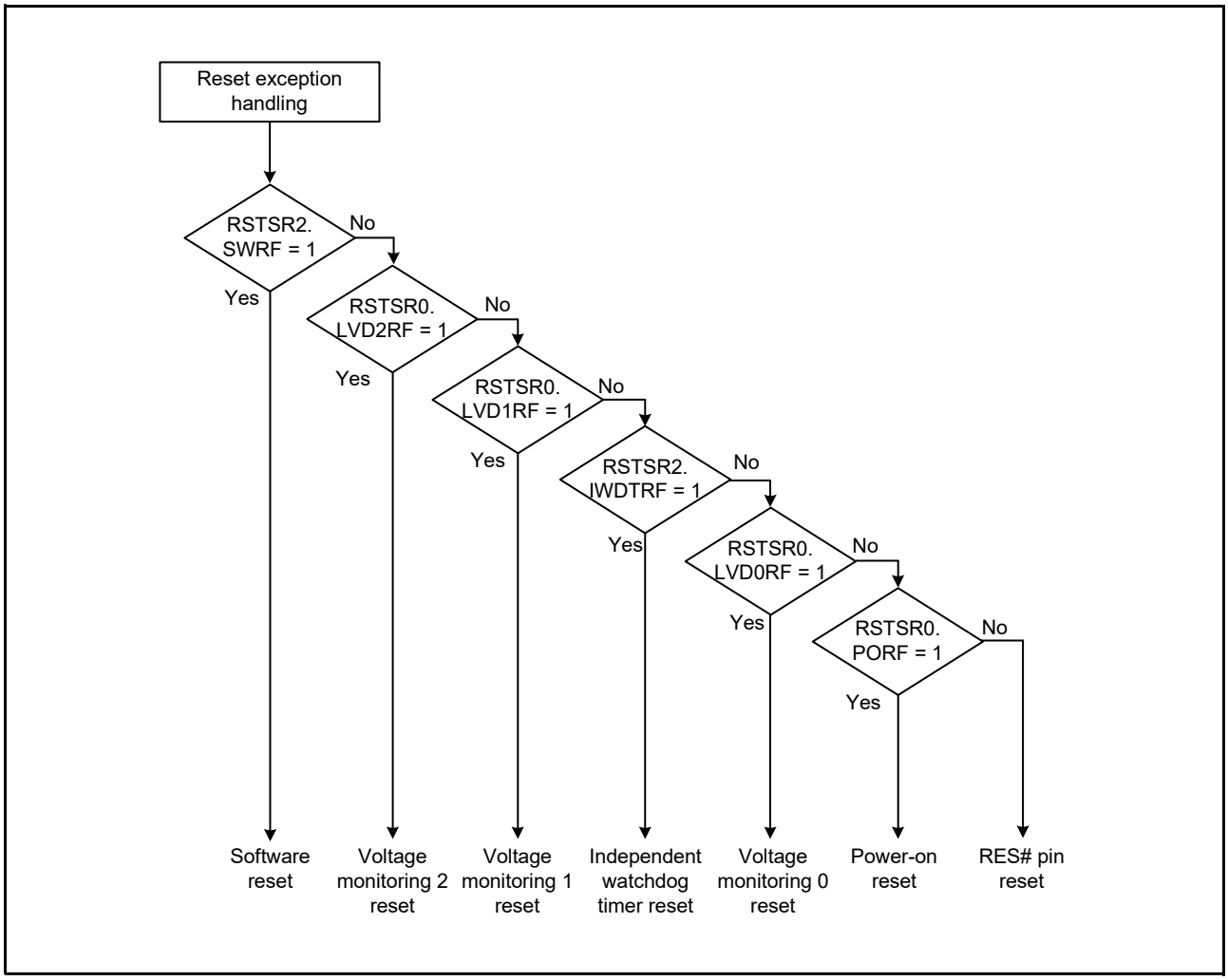

Figure 6.4 Example of Reset Generation Source Determination Flow

7. Option-Setting Memory (OFSM)

7.1 Overview

Option-setting memory (OFSM) refers to a set of registers that are provided for selecting the state of the microcontroller after a reset. The option-setting memory is allocated in the ROM.

Figure 7.1 shows the option-setting memory area.

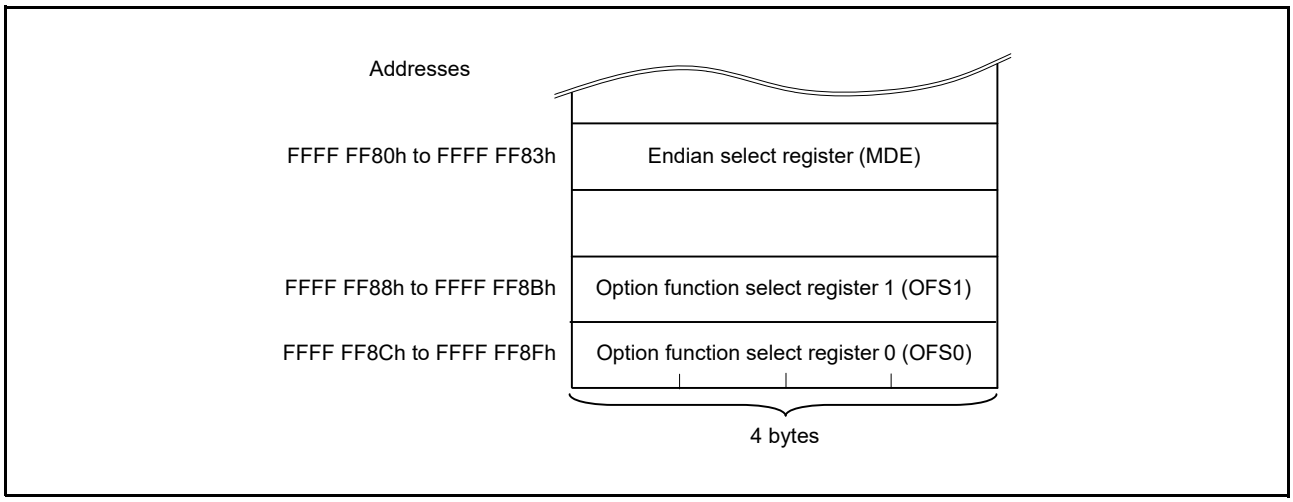

Figure 7.1 Option-Setting Memory Area

7.2 Register Descriptions

7.2.1 Option Function Select Register 0 (OFS0)

Address(es): OFSM.OFS0 FFFF FF8Ch

	b31	b30	b29	b28	b27	b26	b25	b24	b23	b22	b21	b20	b19	b18	b17	b16
	—	—	—	—	—	—	—	—	—	—	—	—	—	—	—	—
Value after reset:	The value set by the user*1															

	b15	b14	b13	b12	b11	b10	b9	b8	b7	b6	b5	b4	b3	b2	b1	b0
	—	IWDTS LCSTP	—	IWDTR STIRQS	IWDTRPSS[1:0]		IWDTRPES[1:0]		IWDTCKS[3:0]				IWDTTOPS[1:0]		IWDTS TRT	—
Value after reset:	The value set by the user*1															

Bit	Symbol	Bit Name	Description	R/W
b0	—	Reserved	When reading, this bit returns the value written by the user. The write value should be 1.	R
b1	IWDTSTRT	IWDT Start Mode Select	0: IWDT is automatically activated in auto-start mode after a reset 1: IWDT is halted after a reset	R
b3, b2	IWDTTOPS[1:0]	IWDT Timeout Period Select	b3 b2 0 0: 128 cycles (007Fh) 0 1: 512 cycles (01FFh) 1 0: 1024 cycles (03FFh) 1 1: 2048 cycles (07FFh)	R
b7 to b4	IWDTCKS[3:0]	IWDT Clock Frequency Division Ratio Select	b7 b4 0 0 0 0: No division 0 0 1 0: Divide-by-16 0 0 1 1: Divide-by-32 0 1 0 0: Divide-by-64 1 1 1 1: Divide-by-128 0 1 0 1: Divide-by-256 Settings other than above are prohibited.	R
b9, b8	IWDTRPES[1:0]	IWDT Window End Position Select	b9 b8 0 0: 75% 0 1: 50% 1 0: 25% 1 1: 0% (No window end position setting)	R
b11, b10	IWDTRPSS[1:0]	IWDT Window Start Position Select	b11 b10 0 0: 25% 0 1: 50% 1 0: 75% 1 1: 100% (No window start position setting)	R
b12	IWDTRSTIRQS	IWDT Reset Interrupt Request Select	0: Non-maskable interrupt request is enabled 1: Reset is enabled	R
b13	—	Reserved	When reading, this bit returns the value written by the user. The write value should be 1.	R
b14	IWDTSLCSTP	IWDT Sleep Mode Count Stop Control	0: Counting stop is disabled 1: Counting stop is enabled when entering sleep, software standby, or deep sleep mode	R
b31 to b15	—	Reserved	When reading, these bits return the value written by the user. The write value should be 1.	R

Note 1. The value of the blank product is FFFF FFFFh. This register is set to a specified value after programming of the flash memory with the user program.

The OFS0 register is allocated in the ROM. Set this register at the same time as writing the program. After writing to the OFS0 register once, do not write to it again.

When erasing the block including the OFS0 register, the OFS0 register value becomes FFFF FFFFh.
The setting in the OFS0 register is ignored in boot mode, and this register functions similarly when it is set to FFFF FFFFh.

IWDTSTRT Bit (IWDT Start Mode Select)

This bit selects the mode in which the IWDT is activated after a reset (stopped state or activated in auto-start mode). When activated in auto-start mode, the OFS0 register setting for the IWDT is effective.

IWDTTOPS[1:0] Bits (IWDT Timeout Period Select)

These bits select the timeout period, i.e. the time it takes for the down-counter to underflow, as 128, 512, 1024, or 2048 cycles of the frequency-divided clock set by the IWDTCKS[3:0] bits. The time (number of IWDT-dedicated clock cycles) it takes to underflow after a refresh operation is determined by the combination of the IWDTCKS[3:0] bits and IWDTTOPS[1:0] bits.
For details, see section 27, Independent Watchdog Timer (IWDTa).

IWDTCKS[3:0] Bits (IWDT Clock Frequency Division Ratio Select)

These bits select, from 1/1, 1/16, 1/32, 1/64, 1/128, and 1/256, the division ratio of the prescaler to divide the frequency of the IWDT-dedicated clock. Using the setting of these bits together with the IWDTTOPS[1:0] bit setting, the IWDT counting period can be set from 128 to 524288 IWDT-dedicated clock cycles.
For details, see section 27, Independent Watchdog Timer (IWDTa).

IWDTRPES[1:0] Bits (IWDT Window End Position Select)

These bits select the position of the end of the window for the down-counter as 0%, 25%, 50%, or 75% of the value being counted by the counter. The value of the window end position must be smaller than the value of the window start position (window start position > window end position). If the value for the window end position is greater than the value for the window start position, only the value for the window start position is effective.
The counter values corresponding to the settings for the start and end positions of the window in the IWDTRPSS[1:0] and IWDTRPES[1:0] bits vary with the setting of the IWDTTOPS[1:0] bits.
For details, refer to section 27, Independent Watchdog Timer (IWDTa).

IWDTRPSS[1:0] Bits (IWDT Window Start Position Select)

These bits select the position where the window for the down-counter starts as 25%, 50%, 75%, or 100% of the value being counted (the point at which counting starts is 100% and the point at which an underflow occurs is 0%). The interval between the positions where the window starts and ends becomes the period in which refreshing is possible, and refreshing is not possible outside this period.
For details, refer to section 27, Independent Watchdog Timer (IWDTa).

IWDTRSTIRQS Bit (IWDT Reset Interrupt Request Select)

The setting of this bit selects the operation on an underflow of the down-counter or generation of a refresh error. Either an independent watchdog timer reset or a non-maskable interrupt request is selectable.
For details, refer to section 27, Independent Watchdog Timer (IWDTa).

IWDTSLCSTP Bit (IWDT Sleep Mode Count Stop Control)

This bit selects whether to stop counting when entering sleep, software standby, or deep sleep mode.
For details, see section 27, Independent Watchdog Timer (IWDTa).

7.2.2 Option Function Select Register 1 (OFS1)

Address(es): OFSM.OFS1 FFFF FF88h

	b31	b30	b29	b28	b27	b26	b25	b24	b23	b22	b21	b20	b19	b18	b17	b16
	—	—	—	—	—	—	—	—	—	—	—	—	—	—	—	—
Value after reset:	The value set by the user*1															

	b15	b14	b13	b12	b11	b10	b9	b8	b7	b6	b5	b4	b3	b2	b1	b0
	—	—	—	—	—	—	—	HOCO EN	—	—	—	—	FASTS TUP	LVDAS	VDSEL[1:0]	
Value after reset:	The value set by the user*1															

Bit	Symbol	Bit Name	Description	R/W
b1, b0	VDSEL[1:0]	Voltage Detection 0 Level Select	b1 b0 0 0: 3.84 V is selected 0 1: 2.82 V is selected 1 0: 2.51 V is selected 1 1: 1.90 V is selected	R
b2	LVDAS	Voltage Detection 0 Circuit Start	0: Voltage monitoring 0 reset is enabled after a reset 1: Voltage monitoring 0 reset is disabled after a reset	R
b3	FASTSTUP	Power-On Fast Startup Time	0: Fast startup time at power on 1: Normal startup	R
b7 to b4	—	Reserved	When reading, these bits return the value written by the user. The write value should be 1.	R
b8	HOCOEN	HOCO Oscillation Enable	0: HOCO oscillation is enabled after a reset 1: HOCO oscillation is disabled after a reset	R
b31 to b9	—	Reserved	When reading, these bits return the value written by the user. The write value should be 1.	R

Note 1. The value of the blank product is FFFF FFFFh. This register is set to a specified value after programming of the flash memory with the user program.

The OFS1 register is allocated in the ROM. Set this register at the same time as writing the program. After writing, do not write additions to this register.
When erasing the block including the OFS1 register, the OFS1 register value becomes FFFF FFFFh.
The setting in the OFS1 register is ignored in boot mode, and this register functions similarly when it is set to FFFF FFFFh.

VDSEL[1:0] Bits (Voltage Detection 0 Level Select)

These bits select the voltage detection level to be monitored by the voltage detection 0 circuit.

LVDAS Bit (Voltage Detection 0 Circuit Start)

This bit selects whether the voltage monitoring 0 reset is enabled or disabled after a reset.
The Vdet0 voltage to be monitored by the voltage detection 0 circuit is selected by the VDSEL[1:0] bits.

FASTSTUP Bit (Power-On Fast Startup Time)

The startup time can be reduced by setting this bit to 0 (fast startup time at power on) when it is possible to meet the power-on VCC rising gradient (during fast startup time) shown in Electrical Characteristics. Do not set this bit to 0 when it is not possible to meet the power-on VCC rising gradient (during fast startup time).

HOCOEN Bit (HOCO Oscillation Enable)

This bit selects whether the HOCO oscillation is effective or not after a reset.

Setting the HOCOEN bit to 0 allows the HOCO oscillation to be started before the CPU starts operation, and therefore reduces the wait time for oscillation stabilization.
Note that even if the HOCOEN bit is set to 0, the system clock source is not switched to HOCO. The system clock source is switched to HOCO only by modifying the clock source select bits (SCKCR3.CKSEL[2:0]) from the CPU.
Also, when the HOCOEN bit is set to 0, the HOCO oscillation stabilization time (tHOCO) is secured by hardware, so the clock with the accuracy of the HOCO oscillation frequency (fHOCO) shown in Electrical Characteristics is supplied after release from the CPU reset state.

7.2.3 Endian Select Register (MDE)

Address(es): OFSM.MDE FFFF FF80h

	b31	b30	b29	b28	b27	b26	b25	b24	b23	b22	b21	b20	b19	b18	b17	b16
	—	—	—	—	—	—	—	—	—	—	—	—	—	—	—	—
Value after reset:	The value set by the user*1															

	b15	b14	b13	b12	b11	b10	b9	b8	b7	b6	b5	b4	b3	b2	b1	b0
	—	—	—	—	—	—	—	—	—	—	—	—	—	MDE[2:0]		
Value after reset:	The value set by the user*1															

Bit	Symbol	Bit Name	Description	R/W
b2 to b0	MDE[2:0]	Endian Select	b2 b0 0 0 0: Big endian 1 1 1: Little endian Settings other than above are prohibited.	R
b31 to b3	—	Reserved	When reading, these bits return the value written by the user. The write value should be 1.	R

Note 1. The value of the blank product is FFFF FFFFh. This register is set to a specified value after programming of the flash memory with the user program.

The MDE register selects the endian for the CPU.
MDE is allocated in the ROM. Set the register at the same time as writing the program. After writing to the register once, do not write to it again.
When erasing the block including the MDE register, the MDE register value becomes FFFF FFFFh.

MDE[2:0] Bits (Endian Select)

These bits select little endian or big endian for the CPU.

7.3 Usage Note

7.3.1 Setting Example of Option-Setting Memory

Since the option-setting memory is allocated in the ROM, values cannot be written by executing instructions. Write appropriate values when writing the program. An example of the settings is shown below.

- To set FFFF FFF8h in the OFS0 register

```
.ORG      0FFFFFF8CH
.LWORD    0FFFFFFF8H
```

Note: Programming formats vary depending on the compiler. Refer to the compiler manual for details.

8. Voltage Detection Circuit (LVDAb)

The voltage detection circuit (LVD) monitors the voltage level input to the VCC pin using a program.

8.1 Overview

In voltage detection 0, the detection voltage can be selected from four levels using option function select register 1 (OFS1).
In voltage detection 1, the detection voltage can be selected from 14 levels using the voltage detection level select register (LVDLVLR).
In voltage detection 2, the detection voltage can be selected from four levels using the LVDLVLR register.
Voltage monitoring 0 reset, voltage monitoring 1 reset/interrupt, and voltage monitoring 2 reset/interrupt can be used.
Table 8.1 lists the specifications of the voltage detection circuit. Figure 8.1 is a block diagram of the voltage detection circuit. Figure 8.2 is a block diagram of the voltage monitoring 1 interrupt/reset circuit. Figure 8.3 is a block diagram of the voltage monitoring 2 interrupt/reset circuit.

Table 8.1 LVD Specifications

Item		Voltage Monitoring 0	Voltage Monitoring 1	Voltage Monitoring 2
VCC monitoring	Monitored voltage	Vdet0	Vdet1	Vdet2
	Detection voltage	Voltage selectable from four levels using OFS1	Voltage selectable from 14 levels using the LVDLVLR.LVD1LVL[3:0] bits	Voltage selectable from four levels using the LVDLVLR.LVD2LVL[1:0] bits
	Monitoring flag	Not available	LVD1SR.LVD1MON flag: Monitors whether voltage is higher or lower than Vdet1	LVD2SR.LVD2MON flag: Monitors whether voltage is higher or lower than Vdet2
			LVD1SR.LVD1DET flag: Vdet1 passage detection	LVD2SR.LVD2DET flag: Vdet2 passage detection
Process upon voltage detection	Reset	Voltage monitoring 0 reset	Voltage monitoring 1 reset	Voltage monitoring 2 reset
		Reset when Vdet0 > VCC CPU restart after specified time with VCC > Vdet0	Reset when Vdet1 > VCC CPU restart timing selectable: after specified time with VCC > Vdet1 or Vdet1 > VCC	Reset when Vdet2 > VCC CPU restart timing selectable: after specified time with VCC > Vdet2 or after specified time with Vdet2 > VCC
	Interrupt	Not available	Voltage monitoring 1 interrupt	Voltage monitoring 2 interrupt
			Non-maskable or maskable interrupt is selectable	Non-maskable or maskable interrupt is selectable
			Interrupt request issued when Vdet1 > VCC and VCC > Vdet1 or either	Interrupt request issued when Vdet2 > VCC and VCC > Vdet2 or either
Event link function		Not available	Available Vdet1 passage detection event output	Available Vdet2 passage detection event output

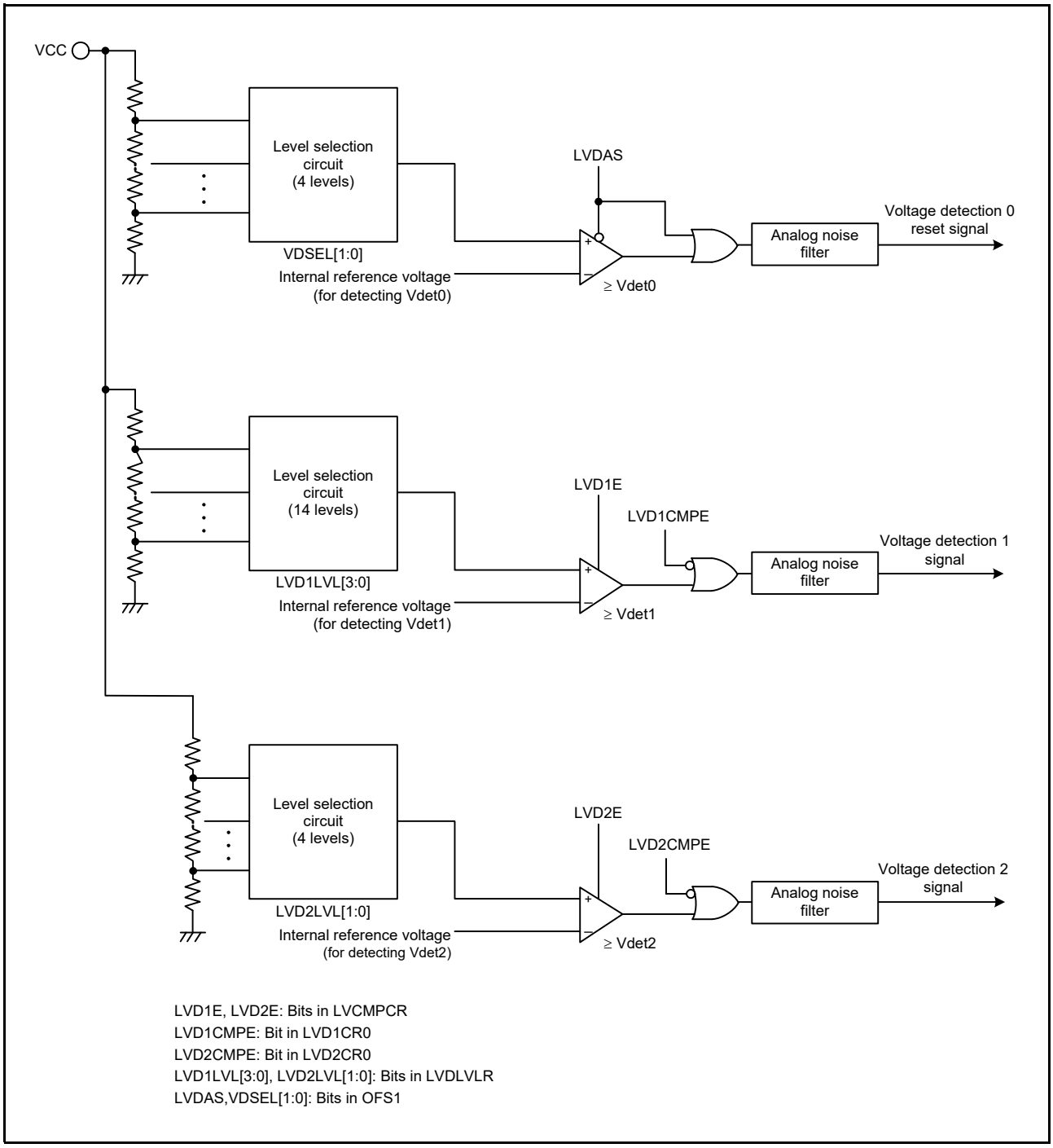

Figure 8.1 Block Diagram of the LVD

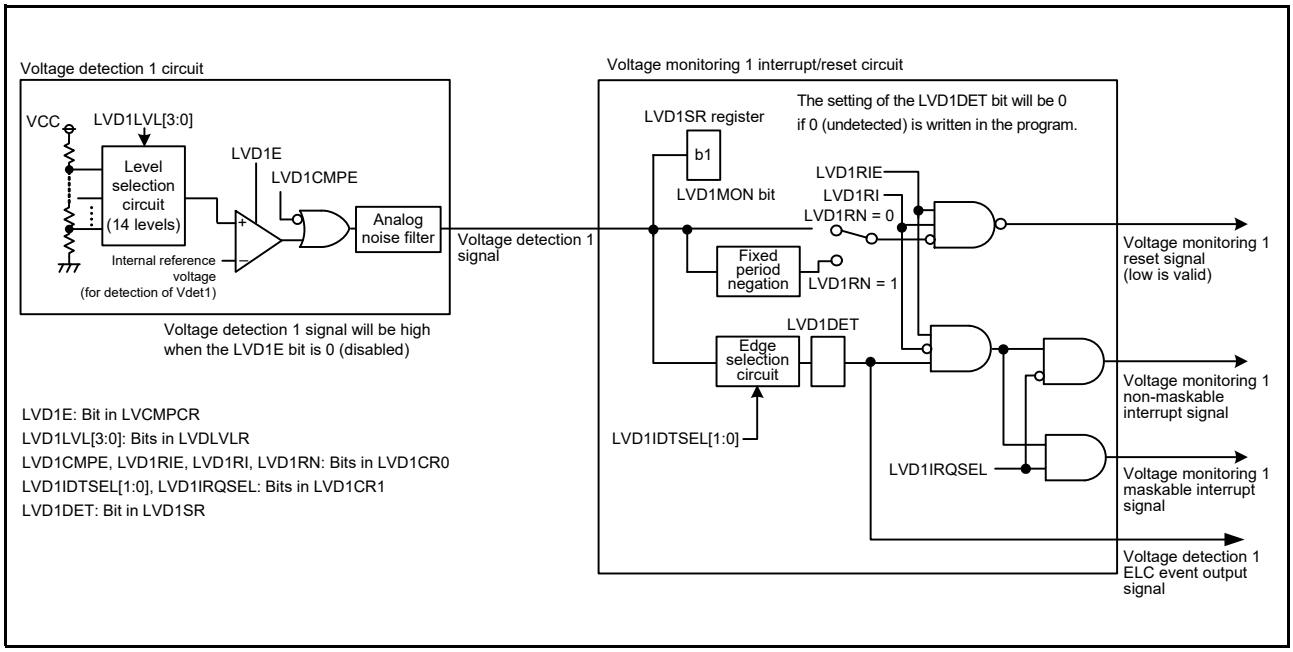

Figure 8.2 Block Diagram of Voltage Monitoring 1 Interrupt/Reset Circuit

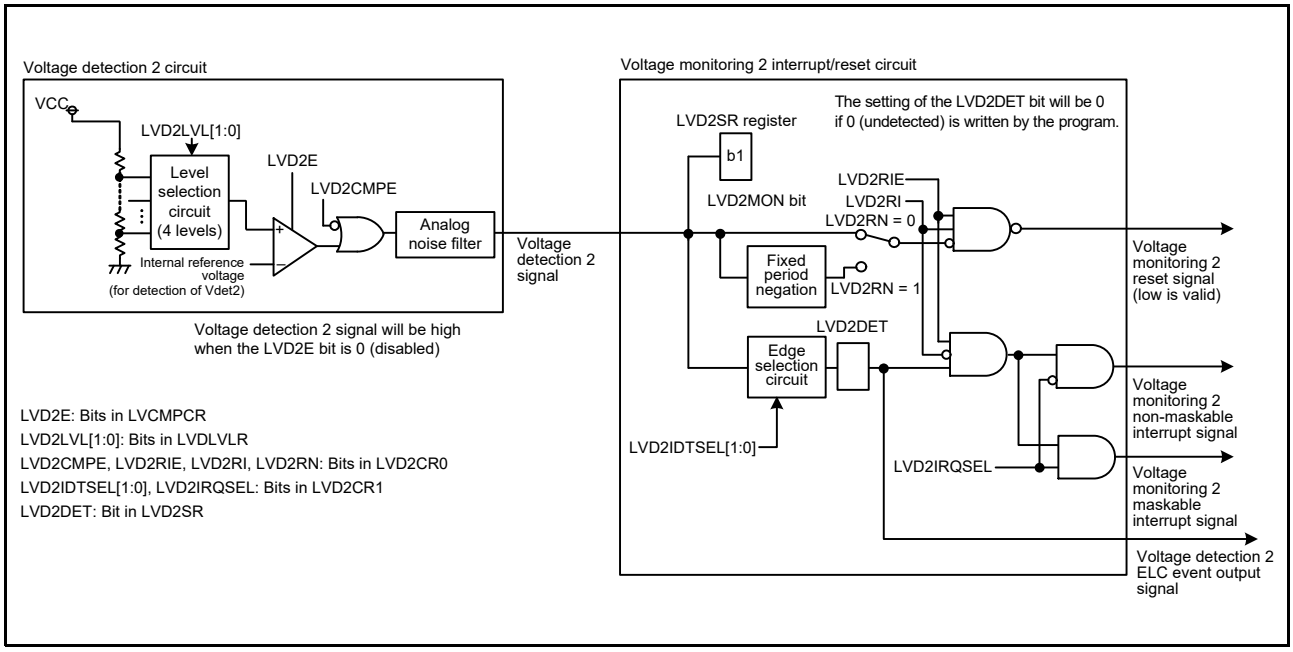

Figure 8.3 Block Diagram of Voltage Monitoring 2 Interrupt/Reset Circuit

8.2 Register Descriptions

8.2.1 Voltage Monitoring 1 Circuit Control Register 1 (LVD1CR1)

Address(es): SYSTEM.LVD1CR1 0008 00E0h

	b7	b6	b5	b4	b3	b2	b1	b0
	—	—	—	—	—	LVD1IRQSEL	LVD1IDTSEL[1:0]	
Value after reset:	0	0	0	0	0	0	0	1

Bit	Symbol	Bit Name	Description	R/W
b1, b0	LVD1IDTSEL [1:0]	Voltage Monitoring 1 Interrupt ELC Event Generation Condition Select	b1 b0 0 0: When VCC ≥ Vdet1 (rise) is detected 0 1: When VCC < Vdet1 (drop) is detected 1 0: When drop and rise are detected 1 1: Setting prohibited	R/W
b2	LVD1IRQSEL	Voltage Monitoring 1 Interrupt Type Select	0: Non-maskable interrupt 1: Maskable interrupt	R/W
b7 to b3	—	Reserved	These bits are read as 0. The write value should be 0.	R/W

Note: Set the PRCR.PRC3 bit to 1 (write enabled) before rewriting this register.

8.2.2 Voltage Monitoring 1 Circuit Status Register (LVD1SR)

Address(es): SYSTEM.LVD1SR 0008 00E1h

	b7	b6	b5	b4	b3	b2	b1	b0
	—	—	—	—	—	—	LVD1MON	LVD1DET
Value after reset:	0	0	0	0	0	0	1	0

Bit	Symbol	Bit Name	Description	R/W
b0	LVD1DET	Voltage Monitoring 1 Voltage Change Detection Flag	0: Not detected 1: Vdet1 passage detection	R/(W) *1
b1	LVD1MON	Voltage Monitoring 1 Signal Monitor Flag	0: VCC < Vdet1 1: VCC ≥ Vdet1 or LVD1MON circuit is disabled	R
b7 to b2	—	Reserved	These bits are read as 0. The write value should be 0.	R/W

Note: Set the PRCR.PRC3 bit to 1 (write enabled) before rewriting this register.
Note 1. Only 0 can be written to this bit. After writing 0 to this bit, it takes two system clock cycles for the bit to be read as 0.

LVD1DET Flag (Voltage Monitoring 1 Voltage Change Detection Flag)

The LVD1DET flag is enabled when the LVCMPCR.LVD1E bit is 1 (voltage detection 1 circuit enabled) and the LVD1CR0.LVD1CMPE bit is 1 (voltage monitoring 1 circuit comparison result output enabled).
The LVD1DET flag should be set to 0 after LVD1CR0.LVD1RIE is set to 0 (disabled). LVD1CR0.LVD1RIE can be set to 1 (enabled) again after a period of two or more cycles of PCLKB has elapsed.
With read access to an I/O register which access cycle number is defined by PCLKB, two or more cycles of PCLKB may have to be secured as waiting time.

LVD1MON Flag (Voltage Monitoring 1 Signal Monitor Flag)

The LVD1MON flag is enabled when the LVCMPCR.LVD1E bit is 1 (voltage detection 1 circuit enabled) and the LVD1CR0.LVD1CMPE bit is 1 (voltage monitoring 1 circuit comparison result output enabled).

8.2.3 Voltage Monitoring 2 Circuit Control Register 1 (LVD2CR1)

Address(es): SYSTEM.LVD2CR1 0008 00E2h

	b7	b6	b5	b4	b3	b2	b1	b0
	—	—	—	—	—	LVD2IRQSEL	LVD2IDTSEL[1:0]	
Value after reset:	0	0	0	0	0	0	0	1

Bit	Symbol	Bit Name	Description	R/W
b1, b0	LVD2IDTSEL [1:0]	Voltage Monitoring 2 Interrupt ELC Event Generation Condition Select	b1 b0 0 0: When VCC ≥ Vdet2 (rise) is detected 0 1: When VCC < Vdet2 (drop) is detected 1 0: When drop and rise are detected 1 1: Setting prohibited	R/W
b2	LVD2IRQSEL	Voltage Monitoring 2 Interrupt Type Select	0: Non-maskable interrupt 1: Maskable interrupt	R/W
b7 to b3	—	Reserved	These bits are read as 0. The write value should be 0.	R/W

Note: Set the PRCR.PRC3 bit to 1 (write enabled) before rewriting this register.

8.2.4 Voltage Monitoring 2 Circuit Status Register (LVD2SR)

Address(es): SYSTEM.LVD2SR 0008 00E3h

	b7	b6	b5	b4	b3	b2	b1	b0
	—	—	—	—	—	—	LVD2MON	LVD2DET
Value after reset:	0	0	0	0	0	0	1	0

Bit	Symbol	Bit Name	Description	R/W
b0	LVD2DET	Voltage Monitoring 2 Voltage Change Detection Flag	0: Not detected 1: Vdet2 passage detection	R/(W) *1
b1	LVD2MON	Voltage Monitoring 2 Signal Monitor Flag	0: VCC < Vdet2 1: VCC ≥ Vdet2 or LVD2MON is disabled	R
b7 to b2	—	Reserved	These bits are read as 0. The write value should be 0.	R/W

Note: Set the PRCR.PRC3 bit to 1 (write enabled) before rewriting this register.
Note 1. Only 0 can be written to this bit. After writing 0 to this bit, it takes two system clock cycles for the bit to be read as 0.

LVD2DET Flag (Voltage Monitoring 2 Voltage Change Detection Flag)

The LVD2DET flag is enabled when the LVCMPCR.LVD2E bit is 1 (voltage detection 2 circuit enabled) and the LVD2CR0.LVD2CMPE bit is 1 (voltage monitoring 2 circuit comparison result output enabled).
The LVD2DET flag should be set to 0 after LVD2CR0.LVD2RIE is set to 0 (disabled). LVD2CR0.LVD2RIE can be set to 1 (enabled) again after a period of two or more cycles of PCLKB has elapsed.
With read access to an I/O register which access cycle number is defined by PCLKB, two or more cycles of PCLKB may have to be secured as waiting time.

LVD2MON Flag (Voltage Monitoring 2 Signal Monitor Flag)

The LVD2MON flag is enabled when the LVCMPCR.LVD2E bit is 1 (voltage detection 2 circuit enabled) and the LVD2CR0.LVD2CMPE bit is 1 (voltage monitoring 2 circuit comparison result output enabled).

8.2.5 Voltage Monitoring Circuit Control Register (LVCMPCR)

Address(es): SYSTEM.LVCMPCR 0008 C297h

	b7	b6	b5	b4	b3	b2	b1	b0
	—	LVD2E	LVD1E	—	—	—	—	—
Value after reset:	0	0	0	0	0	0	0	0

Bit	Symbol	Bit Name	Description	R/W
b4 to b0	—	Reserved	These bits are read as 0. The write value should be 0.	R/W
b5	LVD1E	Voltage Detection 1 Enable	0: Voltage detection 1 circuit disabled 1: Voltage detection 1 circuit enabled	R/W
b6	LVD2E	Voltage Detection 2 Enable	0: Voltage detection 2 circuit disabled 1: Voltage detection 2 circuit enabled	R/W
b7	—	Reserved	This bit is read as 0. The write value should be 0.	R/W

Note: Set the PRCR.PRC3 bit to 1 (write enabled) before rewriting this register.

LVD1E Bit (Voltage Detection 1 Enable)

When using voltage detection 1 interrupt/reset or the LVD1SR.LVD1MON flag, set the LVD1E bit to 1. The voltage detection 1 circuit starts once td(E-A) passes after the LVD1E bit value is changed from 0 to 1.

LVD2E Bit (Voltage Detection 2 Enable)

When using voltage detection 2 interrupt/reset or the LVD2SR.LVD2MON flag, set the LVD2E bit to 1. The voltage detection 2 circuit starts once td(E-A) passes after the LVD2E bit value is changed from 0 to 1.

8.2.6 Voltage Detection Level Select Register (LVDLVLR)

Address(es): SYSTEM.LVDLVLR 0008 C298h

	b7	b6	b5	b4	b3	b2	b1	b0
	—	—	LVD2LVL[1:0]		LVD1LVL[3:0]			
Value after reset:	0	0	0	0	0	1	1	1

Bit	Symbol	Bit Name	Description	R/W
b3 to b0	LVD1LVL[3:0]	Voltage Detection 1 Level Select (Standard voltage during drop in voltage)	b3 b0 0 0 0 0: 4.29 V 0 0 0 1: 4.14 V 0 0 1 0: 4.02 V 0 0 1 1: 3.84 V 0 1 0 0: 3.10 V 0 1 0 1: 3.00 V 0 1 1 0: 2.90 V 0 1 1 1: 2.79 V 1 0 0 0: 2.68 V 1 0 0 1: 2.58 V 1 0 1 0: 2.48 V 1 0 1 1: 2.20 V 1 1 0 0: 1.96 V 1 1 0 1: 1.86 V Settings other than those listed above are prohibited.	R/W
b5, b4	LVD2LVL[1:0]	Voltage Detection 2 Level Select (Standard voltage during drop in voltage)	b5 b4 0 0: 4.29V 0 1: 4.14V 1 0: 4.02V 1 1: 3.84V	R/W
b7, b6	—	Reserved	These bits are read as 0. The write value should be 0.	R/W

Note: Set the PRCR.PRC3 bit to 1 (write enabled) before rewriting this register.

When changing the LVDLVLR register, first set the LVCMPCR.LVD1E and LVCMPCR.LVD2E bits to 0 (voltage detection n circuit disabled) (n = 1, 2).

When a setting is made so that the voltage detection level range set by the LVD1LVL[3:0] bits overlaps with the range set by the LVD2LVL[1:0] bits, it cannot be specified which of LVD1 and LVD2 is used for voltage detection. For details on the voltage detection level range, refer to section 39, Electrical Characteristics.

8.2.7 Voltage Monitoring 1 Circuit Control Register 0 (LVD1CR0)

Address(es): SYSTEM.LVD1CR0 0008 C29Ah

	b7	b6	b5	b4	b3	b2	b1	b0
	LVD1RN	LVD1RI	—	—	—	LVD1CMPE	—	LVD1RIE
Value after reset:	1	0	0	0	X	0	0	0

x: Undefined

Bit	Symbol	Bit Name	Description	R/W
b0	LVD1RIE	Voltage Monitoring 1 Interrupt/Reset Enable	0: Disabled 1: Enabled	R/W
b1	—	Reserved	This bit is read as 0. The write value should be 0.	R/W
b2	LVD1CMPE	Voltage Monitoring 1 Circuit Comparison Result Output Enable	0: Voltage monitoring 1 circuit comparison results output disabled 1: Voltage monitoring 1 circuit comparison results output enabled	R/W
b3	—	Reserved	The read value is undefined. The write value should be 0.	R/W
b5, b4	—	Reserved	These bits are read as 0. The write value should be 0.	R/W
b6	LVD1RI	Voltage Monitoring 1 Circuit Mode Select	0: Voltage monitoring 1 interrupt occurs when the voltage passes Vdet1 1: Voltage monitoring 1 reset occurs when the voltage falls below Vdet1	R/W
b7	LVD1RN	Voltage Monitoring 1 Reset Negation Select	0: Negation follows a stabilization time (tLVD1) after VCC > Vdet1 is detected. 1: Negation follows a stabilization time (tLVD1) after assertion of the voltage monitoring 1 reset.	R/W

Note: Set the PRCR.PRC3 bit to 1 (write enabled) before rewriting this register.

LVD1RN Bit (Voltage Monitoring 1 Reset Negation Select)

If the LVD1RN bit is to be set to 1 (negation follows a stabilization time after assertion of the voltage monitoring 1 reset), set the LOCOCR.LCSTP bit to 0 (LOCO is operating). Furthermore, if a transition to software standby mode, the only possible value for the LVD1RN bit is 0 (negation follows a stabilization time after VCC > Vdet1 is detected). Do not set the LVD1RN bit to 1 (negation follows a stabilization time after assertion of the voltage monitoring 1 reset).

8.2.8 Voltage Monitoring 2 Circuit Control Register 0 (LVD2CR0)

Address(es): SYSTEM.LVD2CR0 0008 C29Bh

	b7	b6	b5	b4	b3	b2	b1	b0
	LVD2RN	LVD2RI	—	—	—	LVD2CMPE	—	LVD2RIE
Value after reset:	1	0	0	0	X	0	0	0

x: Undefined

Bit	Symbol	Bit Name	Description	R/W
b0	LVD2RIE	Voltage Monitoring 2 Interrupt/Reset Enable	0: Disabled 1: Enabled	R/W
b1	—	Reserved	This bit is read as 0. The write value should be 0.	R/W
b2	LVD2CMPE	Voltage Monitoring 2 Circuit Comparison Result Output Enable	0: Voltage monitoring 2 circuit comparison results output disabled 1: Voltage monitoring 2 circuit comparison results output enabled	R/W
b3	—	Reserved	The read value is undefined. The write value should be 0.	R/W
b5, b4	—	Reserved	These bits are read as 0. The write value should be 0.	R/W
b6	LVD2RI	Voltage Monitoring 2 Circuit Mode Select	0: Voltage monitoring 2 interrupt during Vdet2 passage 1: Voltage monitoring 2 reset enabled when the voltage falls to and below Vdet2	R/W
b7	LVD2RN	Voltage Monitoring 2 Reset Negation Select	0: Negation follows a stabilization time (tLVD2) after VCC > Vdet2 is detected. 1: Negation follows a stabilization time (tLVD2) after assertion of the voltage monitoring 2 reset.	R/W

Note: Set the PRCR.PRC3 bit to 1 (write enabled) before rewriting this register.

LVD2RN Bit (Voltage Monitoring 2 Reset Negation Select)

If the LVD2RN bit is to be set to 1 (negation follows a stabilization time after assertion of the voltage monitoring 2 reset), set the LOCOCR.LCSTP bit to 0 (LOCO is operating). Furthermore, if a transition to software standby mode, the only possible value for the LVD2RN bit is 0 (negation follows a stabilization time after VCC > Vdet2 is detected). Do not set the LVD2RN bit to 1 (negation follows a stabilization time after assertion of the voltage monitoring 2 reset).

8.3 VCC Input Voltage Monitor

8.3.1 Monitoring Vdet0

Monitoring Vdet0 is not possible.

8.3.2 Monitoring Vdet1

After making the following settings, the LVD1SR.LVD1MON flag can be used to monitor the results of comparison by voltage monitor 1.

(1) Specify the detection voltage by setting the LVDLVLR.LVD1LVL[3:0] bits (voltage detection 1 level select).
(2) Set the LVCMPCR.LVD1E bit to 1 (voltage detection 1 circuit enabled).
(3) After waiting for td(E-A), set the LVD1CR0.LVD1CMPE bit to 1 (voltage monitoring 1 circuit comparison results output enabled).

8.3.3 Monitoring Vdet2

After making the following settings, the LVD2SR.LVD2MON flag can be used to monitor the results of comparison by voltage monitor 2.

(1) Specify the detection voltage by setting the LVDLVLR.LVD2LVL[1:0] bits (voltage detection 2 level select).
(2) Set the LVCMPCR.LVD2E bit to 1 (voltage detection 2 circuit enabled).
(3) After waiting for td(E-A), set the LVD2CR0.LVD2CMPE bit to 1 (voltage monitoring 2 circuit comparison results output enabled).

8.4 Reset from Voltage Monitor 0

When using the reset from voltage monitor 0, clear the voltage detection 0 circuit start bit (OFS1.LVDAS) to 0 (enabling the voltage monitor 0 reset after a reset).

Figure 8.4 shows an example of operations for a voltage monitoring 0 reset.

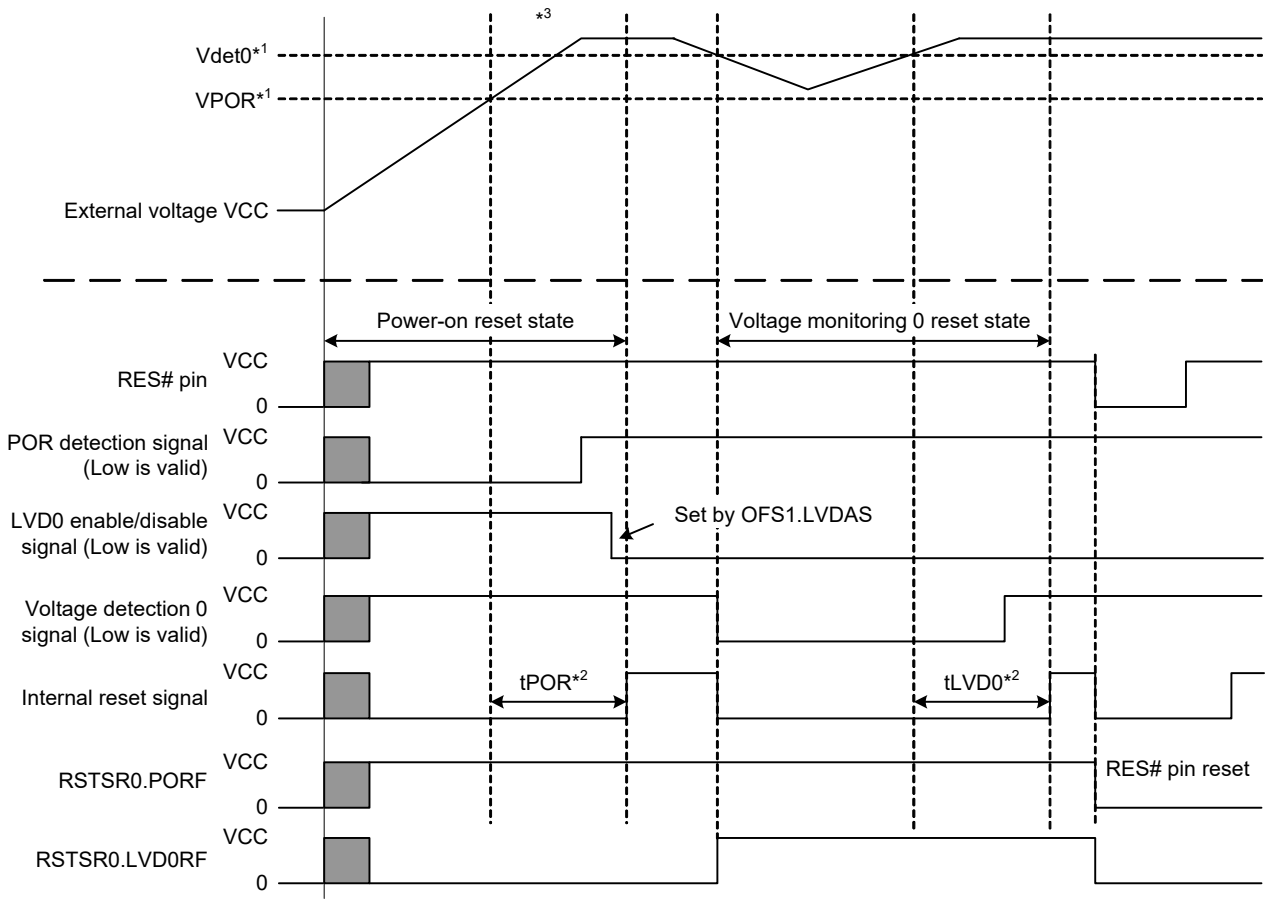

Note: For details on the electrical characteristics, see the Electrical Characteristics section.
Note 1. Vdet0 indicates the detection level for a voltage monitoring 0 reset and VPOR indicates the detection level for a power-on reset.
Note 2. tPOR indicates the period of a power-on reset and tLVD0 indicates the period of a voltage monitoring 0 reset.
Note 3. At the time the power-supply voltage rises, VCC must rise to at least the minimum guaranteed voltage before release from the POR reset state.

Figure 8.4 Example of Voltage Monitoring 0 Reset Operation

8.5 Interrupt and Reset from Voltage Monitoring 1

Table 8.2 shows the procedures for setting bits related to the voltage monitoring 1 interrupt and voltage monitoring 1 reset. Table 8.3 shows the procedures for stopping bits related to the voltage monitoring 1 interrupt and voltage monitoring 1 reset. Figure 8.5 shows an example of operations for a voltage monitoring 1 interrupt. For the operation of the voltage monitoring 1 reset, see Figure 6.2 in section 6, Resets.

Table 8.2 Procedures for Setting Bits Related to the Voltage Monitoring 1 Interrupt and Voltage Monitoring 1 Reset

Step	Voltage Monitoring 1 Interrupt, Voltage Monitoring 1 ELC Event Output	Voltage Monitoring 1 Reset
1*1	Select the detection voltage by setting the LVDLVLR.LVD1LVL[3:0] bits.	
2*1	Set the LVD1CR0.LVD1RI bit to 0 (voltage monitoring 1 interrupt).	Set the LVD1CR0.LVD1RI bit to 1 (voltage monitoring 1 reset). Select the type of reset negation by setting the LVD1CR0.LVD1RN bit.
3	Select the timing of interrupt requests by setting the LVD1CR1.LVD1IDTSEL[1:0] bits. Select the type of interrupt by setting the LVD1CR1.LVD1IRQSEL bit.	—
4	—	Set the LVD1CR0.LVD1RIE bit to 1 (voltage monitoring 1 interrupt/reset enabled).
5*1	Set the LVCMPCR.LVD1E bit to 1 (voltage detection 1 circuit enabled).	
6*1	Wait for at least td(E-A).	
7	Set the LVD1CR0.LVD1CMPE bit to 1 (voltage monitoring 1 circuit comparison results output enabled).	
8	Wait for at least 2 μs.	—
9	Set the LVD1SR.LVD1DET bit to 0.	—
10	Set the LVD1CR0.LVD1RIE bit to 1 (voltage monitoring 1 interrupt/reset enabled).	—

Note 1. Steps 1, 2, 5, and 6 are not required if operation is with the setting to select the voltage monitoring 1 interrupt (LVD1CR0.LVD1RI = 0) and operation can be restarted by simply changing the settings of the LVD1CR1.LVD1IRQSEL and LVD1IDTSEL[1:0] bits after monitoring is stopped or if restarting is in a case where the settings related to the voltage-detection circuit were not changed after monitoring was stopped. When changes are to be made and operation is with the setting to select the voltage monitoring 1 reset (LVD1CR0.LVD1RI = 1), proceed through all steps from 1 to 10.

Table 8.3 Procedures for Stopping Bits Related to the Voltage Monitoring 1 Interrupt and Voltage Monitoring 1 Reset

Step	Voltage Monitoring 1 Interrupt, Voltage Monitoring 1 ELC Event Output	Voltage Monitoring 1 Reset
1	Set the LVD1CR0.LVD1RIE bit to 0 (voltage monitoring 1 interrupt/reset disabled).	—
2	Set the LVD1CR0.LVD1CMPE bit to 0 (voltage monitoring 1 circuit comparison results output disabled).	
3*1	Set the LVCMPCR.LVD1E bit to 0 (voltage detection 1 circuit disabled).	
4	—	Set the LVD1CR0.LVD1RIE bit to 0 (voltage monitoring 1 interrupt/reset disabled).
5	Modify settings of bits related to the voltage detection circuit registers other than LVCMPCR.LVD1E, LVD1CR0.LVD1RIE, and LVD1CR0.LVD1CMPE.	

Note 1. Step 3 is not required if operation is with the setting to select the voltage monitoring 1 interrupt (LVD1CR0.LVD1RI = 0) and operation can be restarted by simply changing the settings of the LVD1CR1.LVD1IRQSEL and LVD1IDTSEL[1:0] bits after monitoring is stopped or if restarting is in a case where the settings related to the voltage-detection circuit were not changed after monitoring was stopped. When changes are to be made and operation is with the setting to select the voltage monitoring 1 reset (LVD1CR0.LVD1RI = 1), proceed through all steps from 1 to 5.

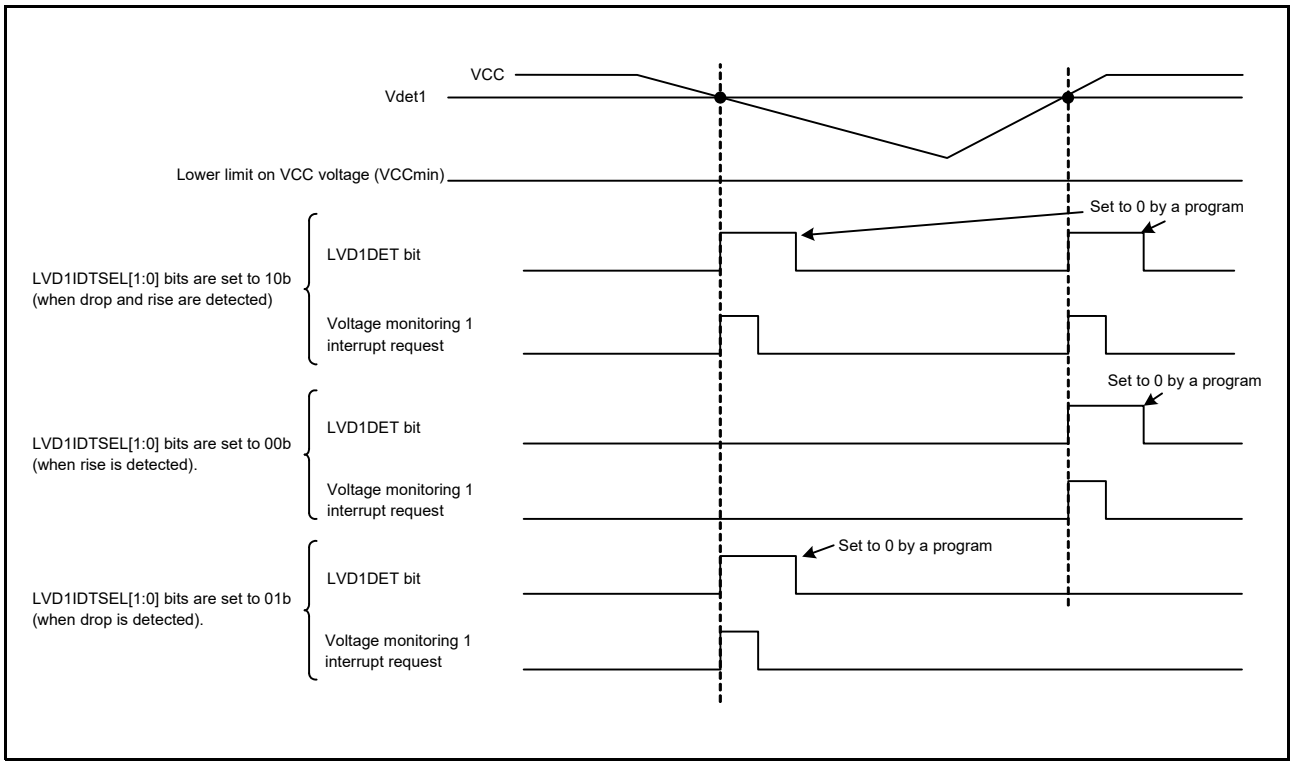

Figure 8.5 Example of Voltage Monitoring 1 Interrupt Operation

8.6 Interrupt and Reset from Voltage Monitoring 2

Table 8.4 shows the procedures for setting bits related to the voltage monitoring 2 interrupt and voltage monitoring 2 reset. Table 8.5 shows the procedure for stopping bits related to the voltage monitoring 2 interrupt and voltage monitoring 2 reset. Figure 8.6 shows an example of operations for a voltage monitoring 2 interrupt. For the operation of the voltage monitoring 2 reset, see Figure 6.2 in section 6, Resets.

Table 8.4 Procedures for Setting Bits Related to the Voltage Monitoring 2 Interrupt and Voltage Monitoring 2 Reset

Step	Voltage Monitoring 2 Interrupt Voltage Monitoring 2 ELC Event Output	Voltage Monitoring 2 Reset
1*1	Select the detection voltage by setting the LVDLVLR.LVD2LVL[1:0] bits.	
2*1	Set the LVD2CR0.LVD2RI bit to 0 (voltage monitoring 2 interrupt).	Set the LVD2CR0.LVD2RI bit to 1 (voltage monitoring 2 reset). Select the type of reset negation by setting the LVD2CR0.LVD2RN bit.
3	Select the timing of interrupt requests by setting the LVD2CR1.LVD2IDTSEL[1:0] bits. Select the type of interrupt by setting the LVD2CR1.LVD2IRQSEL bit.	—
4	—	Set the LVD2CR0.LVD2RIE bit to 1 (voltage monitoring 2 interrupt/reset enabled).
5*1	Set the LVCMPCR.LVD2E bit to 1 (voltage detection 2 circuit enabled).	
6*1	Wait for at least td(E-A).	
7	Set the LVD2CR0.LVD2CMPE bit to 1 (voltage monitoring 2 circuit comparison results output enabled).	
8	Wait for at least 2 μs.	—
9	Set the LVD2SR.LVD2DET bit to 0.	—
10	Set the LVD2CR0.LVD2RIE bit to 1 (voltage monitoring 2 interrupt/reset enabled)	—

Note 1. Steps 1, 2, 5, and 6 are not required if operation is with the setting to select the voltage monitoring 2 interrupt (LVD2CR0.LVD2RI = 0) and operation can be restarted by simply changing the settings of the LVD2CR1.LVD2IRQSEL and LVD2IDTSEL[1:0] bits after monitoring is stopped or if restarting is in a case where the settings related to the voltage-detection circuit were not changed after monitoring was stopped. When changes are to be made and operation is with the setting to select the voltage monitoring 2 reset (LVD2CR0.LVD2RI = 1), proceed through all steps from 1 to 10.

Table 8.5 Procedures for Stopping Bits Related to the Voltage Monitoring 2 Interrupt and Voltage Monitoring 2 Reset

Step	Voltage Monitoring 2 Interrupt Voltage Monitoring 2 ELC Event Output	Voltage Monitoring 2 Reset
1	Set the LVD2CR0.LVD2RIE bit to 0 (voltage monitoring 2 interrupt/reset disabled).	—
2	Set the LVD2CR0.LVD2CMPE bit to 0 (voltage monitoring 2 circuit comparison results output disabled).	
3*1	Set the LVCMPCR.LVD2E bit to 0 (voltage monitoring 2 circuit disabled).	
4	—	Set the LVD2CR0.LVD2RIE bit to 0 (voltage monitoring 2 interrupt/reset disabled).
5	Modify settings of bits related to the voltage detection circuit registers other than LVCMPCR.LVD2E, LVD2CR0.LVD2RIE, and LVD2CR0.LVD2CMPE.	

Note 1. Step 3 is not required if operation is with the setting to select the voltage monitoring 2 interrupt (LVD2CR0.LVD2RI = 0) and operation can be restarted by simply changing the settings of the LVD2CR1.LVD2IRQSEL and LVD2IDTSEL[1:0] bits after monitoring is stopped or if restarting is in a case where the settings related to the voltage-detection circuit were not changed after monitoring was stopped. When changes are to be made and operation is with the setting to select the voltage monitoring 2 reset (LVD2CR0.LVD2RI = 1), proceed through all steps from 1 to 5.

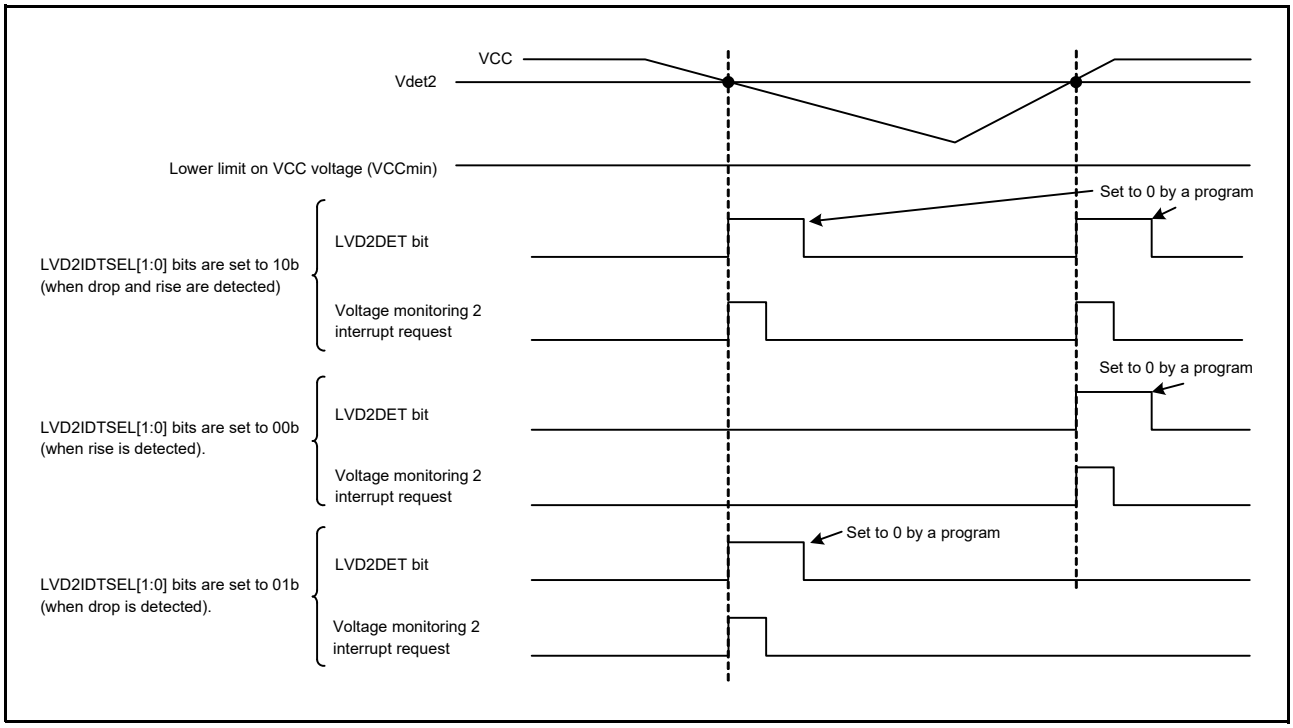

Figure 8.6 Example of Voltage Monitoring 2 Interrupt Operation

8.7 Event Link Output

The LVD can output the event signals to the event link controller (ELC).

(1) Vdet1 passage detection event output
The LVD outputs the event signal when it is detected that the voltage has passed the Vdet1 voltage while both the voltage detection 1 circuit and the voltage monitoring 1 circuit comparison result output are enabled.

(2) Vdet2 passage detection event output
The LVD outputs the event signal when it is detected that the voltage has passed the Vdet2 voltage while both the voltage detection 2 circuit and the voltage monitoring 2 circuit comparison result output are enabled.

When enabling the LVD's event link output function, be sure to make settings for enabling the LVD before enabling the LVD event link function of the ELC. To stop the LVD's event link output function, be sure to make settings for stopping the LVD after disabling the LVD event link function of the ELC.

8.7.1 Interrupt Handling and Event Linking

The LVD has the bits to separately enable or disable the voltage monitoring 1 and 2 interrupts. When an interrupt source is generated and the interrupt is enabled by the interrupt enable bit, the interrupt request signal is output to the CPU.
On the contrary, as soon as an interrupt source is generated, the event link signal is output as the event signal to the other module via the ELC regardless of the state of the interrupt enable bit.
It is possible to output voltage monitoring 1 and 2 interrupts in software standby. The event signals for the ELC, however, are output as follows:

- When the events of passing Vdet1/Vdet2 are detected in software standby mode, no event signals are generated for the ELC because no clock is presented in software standby mode. Since the Vdet1/Vdet2 passage detection flags are preserved, however, when the supply of the clock is resumed after restoring from software standby mode, the event signals for the ELC are output according to the state of the Vdet1/Vdet2 passage detection flags.

9. Clock Generation Circuit

9.1 Overview

This MCU incorporates a clock generation circuit.
Table 9.1 lists the specifications of the clock generation circuit. Figure 9.1 shows a block diagram of the clock generation circuit.

Table 9.1 Specifications of Clock Generation Circuit

Item	Specification
Uses	• Generates the system clock (ICLK) to be supplied to the CPU, DMAC, DTC, ROM, and RAM. • Generates the peripheral module clocks (PCLKA, PCLKB, and PCLKD) to be supplied to peripheral modules. The peripheral module clock PCLKA is the operating clock for the MTU2, the peripheral module clock PCLKD is for the S12AD, and PCLKB is for other modules. • Generates the FlashIF clock (FCLK) to be supplied to the FlashIF. • Generates the CAC clock (CACCLK) to be supplied to the CAC. • Generates the IWDT-dedicated low-speed clock (IWDTCLK) to be supplied to the IWDT. • Generates the CAN clock (CANMCLK) to be supplied to the CAN. • Generates the LPT clock (LPTCLK) to be supplied to the LPT.
Operating frequencies*1	• ICLK: 32 MHz (max) • PCLKA: 32 MHz (max) • PCLKB: 32 MHz (max) • PCLKD: 32 MHz (max) • FCLK: 1 to 32 MHz (for programming and erasing the ROM and E2 DataFlash) 32 MHz (max) (for reading from the E2 DataFlash) • CACCLK: Same frequency as each oscillator • IWDTCLK: 15 kHz • CANMCLK: 20 MHz (max) • LPTCLK: The same frequency as that of the selected oscillator
Main clock oscillator	• Resonator frequency: 1 to 20 MHz (VCC ≥ 2.4 V), 1 to 8 MHz (VCC < 2.4 V) • External clock input frequency: 20 MHz (max) • Connectable resonator or additional circuit: ceramic resonator, crystal • Connection pins: EXTAL, XTAL • Oscillation stop detection function: When a main clock oscillation stop is detected, the system clock source is switched to LOCO and MTU output can be forcedly driven to high-impedance. • Drive capacity switching function
PLL circuit*2	• Input clock source: Main clock • Input pulse frequency division ratio: Selectable from 1, 2, and 4 • Input frequency: 4 to 8 MHz • Frequency multiplication ratio: Selectable from 4 to 8 (increments of 0.5) • VCO oscillation frequency: 24 to 32 MHz (VCC ≥ 2.4 V)
High-speed on-chip oscillator (HOCO)	Oscillation frequency: 32 MHz
Low-speed on-chip oscillator (LOCO)	Oscillation frequency: 4 MHz
IWDT-dedicated on-chip oscillator	Oscillation frequency: 15 kHz

Note 1. The maximum operating frequency in high-speed operating mode. For the maximum operating frequency in the other operating modes, refer to section 11.2.5, Operating Power Control Register (OPCCR).
Note 2. The PLL can be used when the external voltage (VCC) is 2.4 V or above.

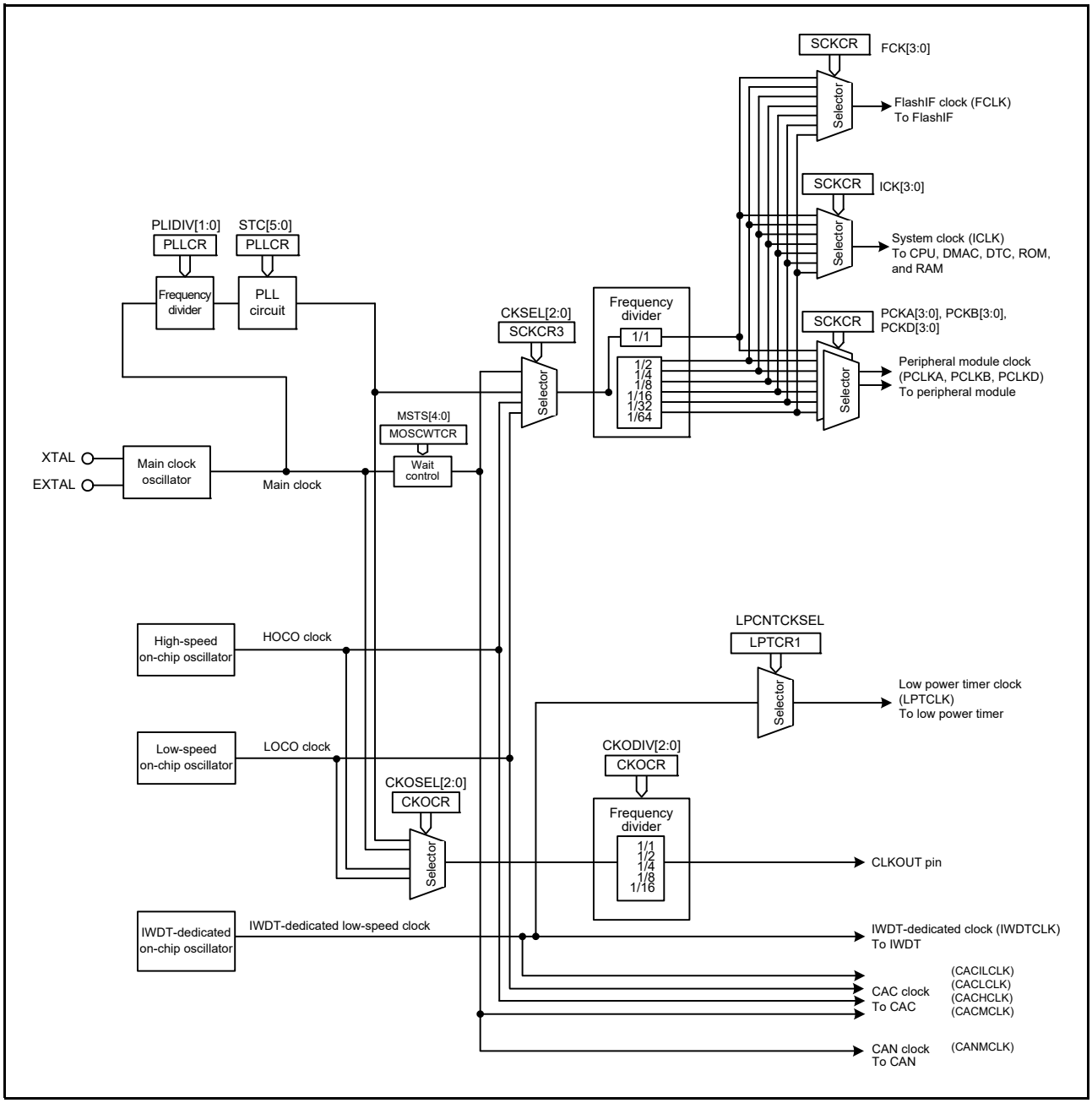

Figure 9.1 Block Diagram of Clock Generation Circuit

Table 9.2 lists the I/O pins of the clock generation circuit.

Table 9.2 I/O Pins of Clock Generation Circuit

Pin Name	I/O	Description
XTAL	Output	These pins are used to connect a crystal. The EXTAL pin can also be used to input an external clock. For details, refer to section 9.3.2, External Clock Input.
EXTAL	Input	
CLKOUT	Output	Clock output pin

9.2 Register Descriptions

9.2.1 System Clock Control Register (SCKCR)

Address(es): SYSTEM.SCKCR 0008 0020h

	b31	b30	b29	b28	b27	b26	b25	b24	b23	b22	b21	b20	b19	b18	b17	b16
	FCK[3:0]				ICK[3:0]				—	—	—	—	—	—	—	—
Value after reset:	0	0	1	1	0	0	1	1	0	0	0	0	0	0	1	1

	b15	b14	b13	b12	b11	b10	b9	b8	b7	b6	b5	b4	b3	b2	b1	b0
	PCKA[3:0]				PCKB[3:0]				—	—	—	—	PCKD[3:0]			
Value after reset:	0	0	1	1	0	0	1	1	0	0	0	0	0	0	1	1

Bit	Symbol	Bit Name	Description	R/W
b3 to b0	PCKD[3:0] *1	Peripheral Module Clock D (PCLKD) Select	b3 b0 0 0 0 0: ×1 0 0 0 1: ×1/2 0 0 1 0: ×1/4 0 0 1 1: ×1/8 0 1 0 0: ×1/16 0 1 0 1: ×1/32 0 1 1 0: ×1/64 Settings other than above are prohibited.	R/W
b7 to b4	—	Reserved	These bits are read as 0. The write value should be 0.	R/W
b11 to b8	PCKB[3:0] *1	Peripheral Module Clock B (PCLKB) Select	b11 b8 0 0 0 0: ×1 0 0 0 1: ×1/2 0 0 1 0: ×1/4 0 0 1 1: ×1/8 0 1 0 0: ×1/16 0 1 0 1: ×1/32 0 1 1 0: ×1/64 Settings other than above are prohibited.	R/W
b15 to b12	PCKA[3:0] *1	Peripheral Module Clock A (PCLKA) Select	b15 b12 0 0 0 0: ×1 0 0 0 1: ×1/2 0 0 1 0: ×1/4 0 0 1 1: ×1/8 0 1 0 0: ×1/16 0 1 0 1: ×1/32 0 1 1 0: ×1/64 Settings other than above are prohibited.	R/W
b19 to b16	—	Reserved	Set these bits to the same value as that of the PCKB[3:0] bits.	R/W
b23 to b20	—	Reserved	These bits are read as 0. The write value should be 0.	R/W
b27 to b24	ICK[3:0]	System Clock (ICLK) Select	b27 b24 0 0 0 0: ×1 0 0 0 1: ×1/2 0 0 1 0: ×1/4 0 0 1 1: ×1/8 0 1 0 0: ×1/16 0 1 0 1: ×1/32 0 1 1 0: ×1/64 Settings other than above are prohibited.	R/W

Bit	Symbol	Bit Name	Description	R/W
b31 to b28	FCK[3:0]*1	FlashIF Clock (FCLK) Select	b31 b28 0 0 0 0: ×1 0 0 0 1: ×1/2 0 0 1 0: ×1/4 0 0 1 1: ×1/8 0 1 0 0: ×1/16 0 1 0 1: ×1/32 0 1 1 0: ×1/64 Settings other than above are prohibited.	R/W

Note: Set the PRCR.PRC0 bit to 1 (write enabled) before rewriting this register.
Note 1. Do not set these bits for a frequency higher than that of the system clock ICLK).

This register cannot be rewritten while the flash memory is being programmed or erased.
When an instruction for writing to SCKCR or SCKCR3 is to follow writing to the SCKCR register, do so in accord with the procedure below.

1. Write to the SCKCR register.
2. Confirm that the value has actually been written to the SCKCR register.
3. Proceed to the next step.

PCKD[3:0] Bits (Peripheral Module Clock D (PCLKD) Select)

These bits select the frequency of peripheral module clock D (PCLKD).

PCKB[3:0] Bits (Peripheral Module Clock B (PCLKB) Select)

These bits select the frequency of peripheral module clock B (PCLKB).

PCKA[3:0] Bits (Peripheral Module Clock A (PCLKA) Select)

These bits select the frequency of peripheral module clock A (PCLKA).

ICK[3:0] Bits (System Clock (ICLK) Select)

These bits select the frequency of the system clock (ICLK).

FCK[3:0] Bits (FlashIF Clock (FCLK) Select)

These bits select the frequency of the FlashIF clock (FCLK).

9.2.2 System Clock Control Register 3 (SCKCR3)

Address(es): SYSTEM.SCKCR3 0008 0026h

	b15	b14	b13	b12	b11	b10	b9	b8	b7	b6	b5	b4	b3	b2	b1	b0
	—	—	—	—	—	CKSEL[2:0]			—	—	—	—	—	—	—	—
Value after reset:	0	0	0	0	0	0	0	0	0	0	0	0	0	0	0	0

Bit	Symbol	Bit Name	Description	R/W
b7 to b0	—	Reserved	These bits are read as 0. The write value should be 0.	R/W
b10 to b8	CKSEL[2:0]	Clock Source Select	b10 b8 0 0 0: LOCO 0 0 1: HOCO 0 1 0: Main clock oscillator 1 0 0: PLL circuit Settings other than above are prohibited.	R/W
b15 to b11	—	Reserved	These bits are read as 0. The write value should be 0.	R/W

Note: Set the PRCR.PRC0 bit to 1 (write enabled) before rewriting this register.

This register cannot be rewritten while the flash memory is being programmed or erased.

CKSEL[2:0] Bits (Clock Source Select)

These bits select the source of the system clock (ICLK), peripheral module clock (PCLKA, PCLKB, and PCLKD), and FlashIF clock (FCLK) from low-speed on-chip oscillator (LOCO), high-speed on-chip oscillator (HOCO), the main clock oscillator, and the PLL circuit.

Transitions to clock sources which are not in operation are prohibited.

9.2.3 PLL Control Register (PLLCR)

Address(es): SYSTEM.PLLCR 0008 0028h

	b15	b14	b13	b12	b11	b10	b9	b8	b7	b6	b5	b4	b3	b2	b1	b0
	—	—	STC[5:0]						—	—	—	—	—	—	PLIDIV[1:0]	
Value after reset:	0	0	0	0	1	1	1	1	0	0	0	0	0	0	0	0

Bit	Symbol	Bit Name	Description	R/W
b1, b0	PLIDIV[1:0]	PLL Input Frequency Division Ratio Select	b1 b0 0 0: ×1 0 1: ×1/2 1 0: ×1/4 1 1: Setting prohibited	R/W
b7 to b2	—	Reserved	These bits are read as 0. The write value should be 0.	R/W
b13 to b8	STC[5:0]	Frequency Multiplication Factor Select	**b13 b8** 0 0 0 1 1 1: ×4 0 0 1 0 0 0: ×4.5 0 0 1 0 0 1: ×5 0 0 1 0 1 0: ×5.5 0 0 1 0 1 1: ×6 0 0 1 1 0 0: ×6.5 0 0 1 1 0 1: ×7 0 0 1 1 1 0: ×7.5 0 0 1 1 1 1: ×8 Settings other than above are prohibited.	R/W
b15, b14	—	Reserved	These bits are read as 0. The write value should be 0.	R/W

Note: Set the PRCR.PRC0 bit to 1 (write enabled) before rewriting this register.

Writing to the PLLCR is prohibited when the PLLCR2.PLLEN bit is 0 (PLL is operating).

PLIDIV[1:0] Bits (PLL Input Frequency Division Ratio Select)

These bits select the frequency division ratio of the PLL clock source.

Set these bits so that the frequency of PLL input signal is within the range of 4 MHz to 8 MHz.

STC[5:0] Bits (Frequency Multiplication Factor Select)

These bits select the frequency multiplication factor of the PLL circuit.

Set these bits so that the PLL oscillation frequency is within the range of 24 MHz to 32 MHz.

9.2.4 PLL Control Register 2 (PLLCR2)

Address(es): SYSTEM.PLLCR2 0008 002Ah

	b7	b6	b5	b4	b3	b2	b1	b0
	—	—	—	—	—	—	—	PLLEN
Value after reset:	0	0	0	0	0	0	0	1

Bit	Symbol	Bit Name	Description	R/W
b0	PLLEN	PLL Stop Control	0: PLL is operating. 1: PLL is stopped.	R/W
b7 to b1	—	Reserved	These bits are read as 0. The write value should be 0.	R/W

Note: Set the PRCR.PRC0 bit to 1 (write enabled) before rewriting this register.

PLLEN Bit (PLL Stop Control)

This bit runs or stops the PLL circuit.
After setting the PLLEN bit to 0 (PLL is operating), confirm that the OSCOVFSR.PLOVF bit is 1 before switching the system clock to the PLL clock.
That is, a fixed time for stabilization is required after the setting for PLL operation. A fixed time is also required for oscillation to stop after the setting to stop PLL operation. Accordingly, take note of the following limitations when starting and stopping PLL operation.

- After stopping the PLL, confirm that the OSCOVFSR.PLOVF bit is 0 before restarting the PLL.
- Confirm that the PLL is operating and that the OSCOVFSR.PLOVF bit is 1 before stopping the PLL.
- Regardless of whether or not it is selected as the system clock, confirm that the OSCOVFSR.PLOVF bit is 1 before executing a WAIT instruction to place the MCU in software standby mode.
- After stopping the PLL, confirm that the OSCOVFSR.PLOVF bit is 0 and execute a WAIT instruction before entering software standby mode.

When the PLL clock is selected by the SCKCR3.CKSEL[2:0] bits, do not set the PLLEN bit (PLL is stopped) to 1.
When the external voltage (VCC) is below 2.4 V, do not set the PLLEN bit to 0 (PLL is operating).

9.2.5 Main Clock Oscillator Control Register (MOSCCR)

Address(es): SYSTEM.MOSCCR 0008 0032h

	b7	b6	b5	b4	b3	b2	b1	b0
	—	—	—	—	—	—	—	MOSTP
Value after reset:	0	0	0	0	0	0	0	1

Bit	Symbol	Bit Name	Description	R/W
b0	MOSTP	Main Clock Oscillator Stop	0: Main clock oscillator is operating. 1: Main clock oscillator is stopped.	R/W
b7 to b1	—	Reserved	These bits are read as 0. The write value should be 0.	R/W

Note: Set the PRCR.PRC0 bit to 1 (write enabled) before rewriting this register.

Set this register after setting up the main clock oscillator wait control register.

MOSTP Bit (Main Clock Oscillator Stop)

This bit runs or stops the main clock oscillator.
After setting the MOSTP bit to 0 (main clock oscillator is operating), read the OSCOVFSR.MOOVF bit to confirm that is has become 1, and then use the main clock.
For the main clock oscillator, a fixed time is required for oscillation to become stable after the settings for operation have been made. Furthermore, a fixed time is required for oscillation to actually stop after the settings to stop oscillation have been made. Accordingly, take note of the following limitations when starting and stopping operation.

- After stopping the main clock oscillator, confirm that the OSCOVFSR.MOOVF bit is 0 before restarting the main clock oscillator.
- Confirm that the main clock oscillator is operating and that the OSCOVFSR.MOOVF bit is 1 before stopping the main clock oscillator.
- Regardless of whether or not it is selected as the system clock, confirm that the OSCOVFSR.MOOVF bit is 1 and execute a WAIT instruction in order to operate the main clock oscillator and place the MCU in software standby mode.
- After stopping the main clock oscillator, confirm that the OSCOVFSR.MOOVF bit is 0 and execute a WAIT instruction before entering software standby mode.

Do not set the MOSTP bit to 1 when any of the following conditions is met.

- The main clock is selected as the clock source for the system clock (SCKCR3.CKSEL[2:0] = 010b)
- The PLL clock is selected as the clock source for the system clock (SCKCR3.CKSEL[2:0] = 100b)
- The PLL is operating (PLLCR2.PLLEN = 0)

9.2.6 Low-Speed On-Chip Oscillator Control Register (LOCOCR)

Address(es): SYSTEM.LOCOCR 0008 0034h

	b7	b6	b5	b4	b3	b2	b1	b0
	—	—	—	—	—	—	—	LCSTP
Value after reset:	0	0	0	0	0	0	0	0

Bit	Symbol	Bit Name	Description	R/W
b0	LCSTP	LOCO Stop	0: LOCO is operating. 1: LOCO is stopped.	R/W
b7 to b1	—	Reserved	These bits are read as 0. The write value should be 0.	R/W

Note: Set the PRCR.PRC0 bit to 1 (write enabled) before rewriting this register.

LCSTP Bit (LOCO Stop)

This bit runs or stops the LOCO.
After the setting of the LCSTP bit has been changed so that the LOCO operates, only start using the LOCO clock after the LOCO clock oscillation stabilization time (t_{LOCO}) has elapsed.
That is, a fixed time for stabilization of oscillation is required after the setting for LOCO operation. A fixed time is also required for oscillation to stop after the setting to stop the oscillator. Accordingly, take note of the following limitations when starting and stopping the oscillator.

- When restarting the LOCO after it has been stopped, allow at least five cycles of the LOCO as an interval over which it is still stopped.
- Ensure that oscillation by the LOCO is stable when making the setting to stop the LOCO.
- Regardless of whether or not it is selected as the system clock, ensure that oscillation by the LOCO is stable before executing a WAIT instruction to place the chip on software standby.
- When a transition to software standby mode is to follow the setting to stop the LOCO, wait for at least three cycles of the LOCO after the setting to stop the LOCO and before executing the WAIT instruction.

While the LOCO is selected by the SCKCR3.CKSEL[2:0] bits, do not set the LCSTP bit to 1 (LOCO is stopped).

9.2.7 IWDT-Dedicated On-Chip Oscillator Control Register (ILOCOCR)

Address(es): SYSTEM.ILOCOCR 0008 0035h

	b7	b6	b5	b4	b3	b2	b1	b0
	—	—	—	—	—	—	—	ILCSTP
Value after reset:	0	0	0	0	0	0	0	1

Bit	Symbol	Bit Name	Description	R/W
b0	ILCSTP	IWDT-Dedicated On-Chip Oscillator Stop	0: IWDT-dedicated on-chip oscillator is operating. 1: IWDT-dedicated on-chip oscillator is stopped.	R/W
b7 to b1	—	Reserved	These bits are read as 0. The write value should be 0.	R/W

Note: Set the PRCR.PRC0 bit to 1 (write enabled) before rewriting this register.

When the IWDT start mode select bit in option function select register 0 (OFS0.IWDTSTRT) is 0 (IWDT is operating), the setting of this register is invalid; it is valid only when the OFS0.IWDTSTRT bit is set to 1 (IWDT is stopped). The ILCSTP bit cannot be changed from 0 (IWDT-dedicated on-chip oscillator is operating) to 1 (IWDT-dedicated on-chip oscillator is stopped) while ILOCOCR is valid.

ILCSTP Bit (IWDT-Dedicated On-Chip Oscillator Stop)

This bit runs or stops the IWDT-dedicated on-chip oscillator.
After the setting of the ILCSTP bit has been changed so that the IWDT-dedicated on-chip oscillator operates, supply of the clock is started the MCU internally after a fixed time corresponding to the IWDT-dedicated clock oscillation stabilization time (t_{ILOCO}) has elapsed.
If the IWDT-dedicated clock is to be used, only start using the oscillator after this wait time has elapsed.
Ensure that oscillation by the IWDT-dedicated on-chip oscillator is stable before executing a WAIT instruction to place the chip on software standby mode.

9.2.8 High-Speed On-Chip Oscillator Control Register (HOCOCR)

Address(es): SYSTEM.HOCOCR 0008 0036h

	b7	b6	b5	b4	b3	b2	b1	b0
	—	—	—	—	—	—	—	HCSTP
Value after reset:	0	0	0	0	0	0	0	0/1*1

Bit	Symbol	Bit Name	Description	R/W
b0	HCSTP	HOCO Stop	0: HOCO is operating. 1: HOCO is stopped.	R/W
b7 to b1	—	Reserved	These bits are read as 0. The write value should be 0.	R/W

Note: Set the PRCR.PRC0 bit to 1 (write enabled) before rewriting this register.
Note 1. The HCSTP bit value after a reset is 0 when the HOCO oscillation enable bit in option function select register 1 (OFS1.HOCOEN) is 0. The HCSTP bit value after a reset is 1 when the OFS1.HOCOEN bit is 1.

HCSTP Bit (HOCO Stop)

This bit runs or stops the HOCO.

When changing the HCSTP bit from 1 to 0 (i.e. changing the HOCO clock from stopped to operating), confirm that the OSCOVFSR.HCOVF bit is 1 before switching the system clock to the HOCO clock.

That is, a fixed time for stabilization of oscillation is required after the setting for HOCO operation. A fixed time is also required for oscillation to stop after the setting to stop the oscillator. Accordingly, take note of the following limitations when starting and stopping the oscillator.

- After stopping the HOCO, confirm that the OSCOVFSR.HCOVF bit is 0 before restarting the HOCO.
- Confirm that the HOCO is operating and that the OSCOVFSR.HCOVF bit is 1 before stopping the HOCO.
- Regardless of whether or not it is selected as the system clock, confirm that the OSCOVFSR.HCOVF bit is 1 before executing a WAIT instruction to place the MCU in software standby mode.
- After stopping the HOCO, confirm that the OSCOVFSR.HCOVF bit is 0 and execute a WAIT instruction before entering software standby mode.

While the HOCO is selected by the SCKCR3.CKSEL[2:0] bits, do not set the HCSTP bit to 1 (HOCO is stopped).

9.2.9 Oscillation Stabilization Flag Register (OSCOVFSR)

Address(es): SYSTEM.OSCOVFSR 0008 003Ch

	b7	b6	b5	b4	b3	b2	b1	b0
	—	—	—	—	HCOVF	PLOVF	—	MOOVF
Value after reset:	0	0	0	0	0/1*1	0	0	0

Bit	Symbol	Bit Name	Description	R/W
b0	MOOVF	Main Clock Oscillation Stabilization Flag	0: Main clock is stopped 1: Oscillation is stable and the clock can be used as the system clock*2	R
b1	—	Reserved	This bit is read as 0. The write value should be 0.	R/W
b2	PLOVF	PLL Clock Oscillation Stabilization Flag	0: PLL is stopped or not stabilized 1: Oscillation is stable and the clock can be used as the system clock	R
b3	HCOVF	HOCO Clock Oscillation Stabilization Flag	0: HOCO is stopped or not stabilized 1: Oscillation is stable and the clock can be used as the system clock	R
b7-b4	—	Reserved	These bits are read as 0. The write value should be 0.	R/W

Note 1. The HCOVF value after a reset is 1 when the HOCO oscillation enable bit in option function selection register 1 (OFS1.HOCOEN) is 0. The HCOVF value after a reset is 0 when the OFS1.HOCOEN bit is 1.
Note 2. When an appropriate value is set in the wait control register for each oscillator. If a set value (wait time) is not adequate, clock supply starts before oscillation becomes stable.

The OSCOVFSR register monitors whether oscillation of each oscillator has become stable.
If a wait control register is provided for each oscillator, specify a wait time that is longer than or equal to the stabilization time of the corresponding oscillation circuit.

MOOVF Flag (Main Clock Oscillation Stabilization Flag)

This flag indicates whether oscillation of the main clock is stable.
[Setting condition]

- After the MOSCCR.MOSTP bit is set to 0 (main clock oscillator is operating) when the MOSTP bit is 1 (main clock oscillator is stopped), the corresponding time set in the MOSCWTCR register has elapsed and supply of the main clock is started to the MCU internally.

[Clearing condition]

- After the MOSCCR.MOSTP bit is set to 1, the processing to stop the oscillation of the main clock oscillator is completed.

PLOVF Flag (PLL Clock Oscillation Stabilization Flag)

This flag indicates whether oscillation of the PLL clock is stable.
[Setting condition]
After the PLLCR2.PLLEN is set to 0 (PLL is operating) when the PLLEN bit is 1 (PLL is stopped), the MOOVF flag becomes 1, the PLL clock oscillation stabilization time (tPLL) has elapsed, and supply of the PLL clock is started to the MCU internally.
[Clearing condition]
After the PLLCR2.PLLEN bit is set to 1, the processing to stop the oscillation of the PLL is completed.

HCOVF Flag (HOCO Clock Oscillation Stabilization Flag)

This flag indicates whether oscillation of the HOCO clock is stable.
[Setting condition]

- After the HOCOCR.HCSTP bit is set to 0 (HOCO is operating) when the HCSTP bit is 1 (HOCO is stopped),

supply of the HOCO clock is started to the MCU internally.

[Clearing condition]

- After the HOCOCR.HCSTP bit is set to 1, the processing to stop the oscillation of the HOCO is completed.

9.2.10 Oscillation Stop Detection Control Register (OSTDCR)

Address(es): SYSTEM.OSTDCR 0008 0040h

	b7	b6	b5	b4	b3	b2	b1	b0
	OSTDE	—	—	—	—	—	—	OSTDIE
Value after reset:	0	0	0	0	0	0	0	0

Bit	Symbol	Bit Name	Description	R/W
b0	OSTDIE	Oscillation Stop Detection Interrupt Enable	0: The oscillation stop detection interrupt is disabled. Oscillation stop detection is not notified to the POE. 1: The oscillation stop detection interrupt is enabled. Oscillation stop detection is notified to the POE.	R/W
b6 to b1	—	Reserved	These bits are read as 0. The write value should be 0.	R/W
b7	OSTDE	Oscillation Stop Detection Function Enable	0: Oscillation stop detection function is disabled. 1: Oscillation stop detection function is enabled.	R/W

Note: Set the PRCR.PRC0 bit to 1 (write enabled) before rewriting this register.

OSTDIE Bit (Oscillation Stop Detection Interrupt Enable)

If the oscillation stop detection flag in the oscillation stop detection status register (OSTDSR.OSTDF) requires clearing, do this after setting the OSTDIE bit to 0. Wait for at least two cycles of PCLKB before again setting the OSTDIE bit to 1. According to the number of cycles for access to read a given I/O register, wait time longer than two cycles of PCLKB may have to be secured.

OSTDE Bit (Oscillation Stop Detection Function Enable)

This bit enables or disables the oscillation stop detection function.

When the OSTDE bit is 1 (oscillation stop detection function enabled), the LOCO stop bit (LOCOCR.LCSTP) is set to 0 and the LOCO operation is started. The LOCO cannot be stopped while the oscillation stop detection function is enabled; writing 1 (LOCO is stopped) to the LOCOCR.LCSTP bit is invalid.

When the oscillation stop detection flag in the oscillation stop detection status register (OSTDSR.OSTDF) is 1 (main clock oscillation stop has been detected), writing 0 to the OSTDE bit is invalid.

When the OSTDE bit is 1, a transition cannot be made to software standby mode. To make a transition to software standby mode, execute the WAIT instruction with the OSTDE bit being 0.

9.2.11 Oscillation Stop Detection Status Register (OSTDSR)

Address(es): SYSTEM.OSTDSR 0008 0041h

	b7	b6	b5	b4	b3	b2	b1	b0
	—	—	—	—	—	—	—	OSTDF
Value after reset:	0	0	0	0	0	0	0	0

Bit	Symbol	Bit Name	Description	R/W
b0	OSTDF	Oscillation Stop Detection Flag	0: The main clock oscillation stop has not been detected. 1: The main clock oscillation stop has been detected.	R/(W) *1
b7 to b1	—	Reserved	These bits are read as 0 and cannot be modified.	R

Note: Set the PRCR.PRC0 bit to 1 (write enabled) before rewriting this register.
Note 1. This bit can only be set to 0.

OSTDF Flag (Oscillation Stop Detection Flag)

This bit is a flag to indicate the main clock status. When the OSTDF flag is 1, it indicates that the main clock oscillation stop has been detected.

Once the main clock oscillation stop is detected, the OSTDF flag is not set to 0 even though the main clock oscillation is restarted. The OSTDF flag is set to 0 by reading 1 from the bit and then writing 0. At least three ICLK cycles of wait time is necessary between writing 0 to the OSTDF flag and reading the OSTDF flag as 0. If the OSTDF flag is set to 0 while the main clock oscillation is stopped, the OSTDF flag becomes 0 and then returns to 1.

When the main clock oscillator (010b) or PLL (100b) is selected by the clock source select bits in system clock control register 3 (SCKCR3.CKSEL[2:0]), the OSTDF flag cannot be modified to 0. The OSTDF flag should be set to 0 after switching the clock source to a source other than the main clock oscillator and the PLL.

[Setting condition]

- The main clock oscillation is stopped with the OSTDCR.OSTDE bit being 1 (oscillation stop detection function enabled).

[Clearing condition]

- 1 is read and then 0 is written when the SCKCR3.CKSEL[2:0] bits are neither 010b nor 100b.

9.2.12 Main Clock Oscillator Wait Control Register (MOSCWTCR)

Address(es): SYSTEM.MOSCWTCR 0008 00A2h

	b7	b6	b5	b4	b3	b2	b1	b0
	—	—	—	MSTS[4:0]				
Value after reset:	0	0	0	0	0	1	0	0

Bit	Symbol	Bit Name	Description	R/W
b4 to b0	MSTS[4:0]	Main Clock Oscillator Wait Time	b4 b0 0 0 0 0 0: Wait time = 2 cycles (0.5 μs) 0 0 0 0 1: Wait time = 1024 cycles (256 μs) 0 0 0 1 0: Wait time = 2048 cycles (512 μs) 0 0 0 1 1: Wait time = 4096 cycles (1.024 ms) 0 0 1 0 0: Wait time = 8192 cycles (2.048 ms) 0 0 1 0 1: Wait time = 16384 cycles (4.096 ms) 0 0 1 1 0: Wait time = 32768 cycles (8.192 ms) 0 0 1 1 1: Wait time = 65536 cycles (16.384 ms) Settings other than above are prohibited. Wait time when LOCO = 4.0 MHz (0.25 μs, TYP.)	R/W
b7 to b5	—	Reserved	These bits are read as 0. The write value should be 0.	R/W

Note: Set the PRCR.PRC1 bit to 1 (write enabled) before rewriting this register.

MSTS[4:0] Bits (Main Clock Oscillator Wait Time)

Set these bits to select the oscillation stabilization wait time of the main clock oscillator.

Set the main clock oscillation stabilization time to longer than or equal to the stabilization time recommended by the oscillator manufacturer. When the main clock is externally input, set these bits to 00000b because the oscillation stabilization time is not required.

The wait time set by the MSTS[4:0] bits is counted using the LOCO clock. The LOCO automatically oscillates when necessary, regardless of the value of the LOCOCR.LCSTP bit.

After the set wait time has elapsed, supply of the main clock is started to the MCU internally and the OSCOVFSR.MOOVF flag becomes 1. If the set wait time is short, supply of the main clock is started before oscillation of the clock becomes stable.

Only rewrite the MOSCWTCR register when the MOSCCR.MOSTP bit is 1 and the OSCOVFSR.MOOVF flag is 0. Do not rewrite this register under any other conditions.

9.2.13 CLKOUT Output Control Register (CKOCR)

Address(es): SYSTEM.CKOCR 0008 003Eh

	b15	b14	b13	b12	b11	b10	b9	b8	b7	b6	b5	b4	b3	b2	b1	b0
	CKOSTP	CKODIV[2:0]			CKOSEL[3:0]				—	—	—	—	—	—	—	—
Value after reset:	1	0	0	0	0	0	0	0	0	0	0	0	0	0	0	0

Bit	Symbol	Bit Name	Description	R/W
b7 to b0	—	Reserved	These bits are read as 0. The write value should be 0.	R/W
b11 to b8	CKOSEL[3:0]	CLKOUT Output Source Select	b11 b8 0 0 0 0: LOCO clock 0 0 0 1: HOCO clock 0 0 1 0: Main clock oscillator 0 1 0 0: PLL Settings other than above are prohibited.	R/W
b14 to b12	CKODIV[2:0]	CLKOUT Output Division Ratio Select	b14 b2 0 0 0: No division 0 0 1: ×1/2 0 1 0: ×1/4 0 1 1: ×1/8 1 0 0: ×1/16 Settings other than above are prohibited.	R/W
b15	CKOSTP	CLKOUT Output Stop Control	0: CLKOUT pin output enabled*1 1: CLKOUT pin output disabled	R/W

Note: Set the PRCR.PRC0 bit to 1 (write enabled) before rewriting this register.
Note 1. It is also necessary to set the pin function control register and port mode register for the corresponding pin.

CKOSEL[3:0] Bits (CLKOUT Output Source Select)

Set these bits to select the LOCO clock, HOCO clock, main clock, or PLL as the source of the clock to be output from the CLKOUT pin.

CKODIV[2:0] Bits (CLKOUT Output Division Ratio Select)

Set these bits to select the division ratio of the clock selected by the CKOSEL[3:0] bits.
Set the CKOSTP bit to 1 when changing the division ratio.
The division ratio of the output clock frequency should be set to no higher than 16 MHz when VCC is 2.7 V or above, and no higher than 8 MHz when VCC is below 2.7 V.
For details on the characteristics of the clock output from the CLKOUT pin, see Table 39.42, Timing of CLKOUT.

CKOSTP Bit (CLKOUT Output Stop Control)

Set this bit to enable or disable output from the CLKOUT pin.
When this bit is set to 1, the selected clock is output. When this bit is set to 1, a low level is output.
If the CKOSTP bit is rewritten while the clock is still oscillating, a glitch may be generated in the output.

9.2.14 Main Clock Oscillator Forced Oscillation Control Register (MOFCR)

Address(es): SYSTEM.MOFCR 0008 C293h

	b7	b6	b5	b4	b3	b2	b1	b0
	—	MOSEL	MODRV21	—	—	—	—	—
Value after reset:	0	0	0	0	0	0	0	0

Bit	Symbol	Bit Name	Description	R/W
b4 to b0	—	Reserved	These bits are read as 0. The write value should be 0.	R/W
b5	MODRV21	Main Clock Oscillator Drive Capability Switch	VCC ≥ 2.4 V 0: 1 MHz or higher and lower than 10 MHz 1: 10 MHz to 20 MHz VCC < 2.4 V 0: 1 MHz to 8 MHz 1: Setting prohibited	R/W
b6	MOSEL	Main Clock Oscillator Switch	0: Resonator 1: External oscillator input	R/W
b7	—	Reserved	This bit is read as 0. The write value should be 0.	R/W

Note: Set the PRCR.PRC1 bit to 1 (write enabled) before rewriting this register.

The EXTAL/XTAL pin is also used as a port. In the initial setting state, the pin is set as a port.

MODRV21 Bit (Main Clock Oscillator Drive Capability Switch)

These bits select the drive capability of the main clock oscillator.

MOSEL Bit (Main Clock Oscillator Switch)

This bit selects the oscillation source of the main clock oscillator.

9.2.15 Low-Speed On-Chip Oscillator Trimming Register (LOCOTRR)

Address(es): SYSTEM.LOCOTRR 0008 0060h

	b7	b6	b5	b4	b3	b2	b1	b0
	—	—	—	LOCOTRD[4:0]				
Value after reset:	0	0	0	*1	*1	*1	*1	*1

Bit	Symbol	Bit Name	Description	R/W
b4 to b0	LOCOTRD[4:0]	Low-Speed On-Chip Oscillator Frequency Adjustment	b4 b0 1 0 0 0 0: -16 (Frequency: Low) 1 0 0 0 1: -15 : : 0 1 1 1 0: 14 0 1 1 1 1: 15 (Frequency: High)	R/W
b7 to b5	—	Reserved	These bits are read as 0. The write value should be 0.	R/W

Note: Set the PRCR.PRC0 bit to 1 (write enabled) before rewriting this register.
Note 1. Chip-specific value

LOCOTRD[4:0] Bits (Low-Speed On-Chip Oscillator Frequency Adjustment)

Set the frequency adjustment value for the low-speed on-chip oscillator.

The setting range is -16 (10h) to 15 (0Fh) by two's complements. The greater the set value is, the higher the frequency is. The frequency is adjusted under certain conditions before shipment, so the value after reset varies with the chip. After a reset, the oscillation frequency returns to the factory default.

9.2.16 IWDT-Dedicated On-Chip Oscillator Trimming Register (ILOCOTRR)

Address(es): SYSTEM.ILOCOTRR 0008 0064h

	b7	b6	b5	b4	b3	b2	b1	b0
	—	—	—	ILOCOTRD[4:0]				
Value after reset:	0	0	0	*1	*1	*1	*1	*1

Bit	Symbol	Bit Name	Description	R/W
b4 to b0	ILOCOTRD[4:0]	IWDT-Dedicated On-Chip Oscillator Frequency Adjustment	b4 b0 0 0 0 0 0: 0 (Frequency: Low) 0 0 0 0 1: 1 : : 1 1 1 1 0: 30 1 1 1 1 1: 31 (Frequency: High)	R/W
b7 to b5	—	Reserved	These bits are read as 0. The write value should be 0.	R/W

Note: Set the PRCR.PRC0 bit to 1 (write enabled) before rewriting this register.
Note 1. Chip-specific value

ILOCOTRD[4:0] Bits (IWDT-Dedicated On-Chip Oscillator Frequency Adjustment)

Set the frequency adjustment value for the IWDT-dedicated on-chip oscillator.

The setting range is from 0 (00h) to 31 (1Fh) by binary numbers. The greater the set value is, the higher the frequency is. The frequency is adjusted under certain conditions before shipment, so the value after reset varies with the chip. After a reset, the oscillation frequency returns to the factory default.

9.2.17 High-Speed On-Chip Oscillator Trimming Register 0 (HOCOTRR0)

Address(es): SYSTEM.HOCOTRR0 0008 0068h

	b7	b6	b5	b4	b3	b2	b1	b0
	—	—	HOCOTRD[5:0]					
Value after reset:	0	0	*1	*1	*1	*1	*1	*1

Bit	Symbol	Bit Name	Description	R/W
b5 to b0	HOCOTRD[5:0]	High-Speed On-Chip Oscillator Frequency Adjustment	b5 b0 0 0 0 0 0 0: 0 (Frequency: Low) 0 0 0 0 0 1: 1 : : 1 1 1 1 1 0: 62 1 1 1 1 1 1: 63 (Frequency: High)	R/W
b7, b6	—	Reserved	These bits are read as 0. The write value should be 0.	R/W

Note: Set the PRCR.PRC0 bit to 1 (write enabled) before rewriting this register.
Note 1. Chip-specific value

HOCOTRR0 corresponds to 32 MHz.

HOCOTRD[5:0] Bits (High-Speed On-Chip Oscillator Frequency Adjustment)

Set the frequency adjustment value for the high-speed on-chip oscillator.
The setting range is from 0 (00h) to 63 (3Fh) by binary numbers. The greater the set value is, the higher the frequency is.
The frequency is adjusted under certain conditions before shipment, so the value after reset varies with the chip. After a reset, the oscillation frequency returns to the factory default.

9.3 Main Clock Oscillator

There are two ways of supplying the clock signal from the main clock oscillator: connecting an oscillator or the input of an external clock signal.

9.3.1 Connecting a Crystal

Figure 9.2 shows an example of connecting a crystal.
A damping resistor (Rd) should be added, if necessary. Since the resistor values vary depending on the resonator and the oscillation drive capability, use values recommended by the resonator manufacturer. If use of an external feedback resistor (Rf) is directed by the resonator manufacturer, insert an Rf between EXTAL and XTAL by following the instruction.
When connecting a resonator to supply the clock, the frequency of the resonator should be in the frequency range of the resonator for the main clock oscillator described in Table 9.1.

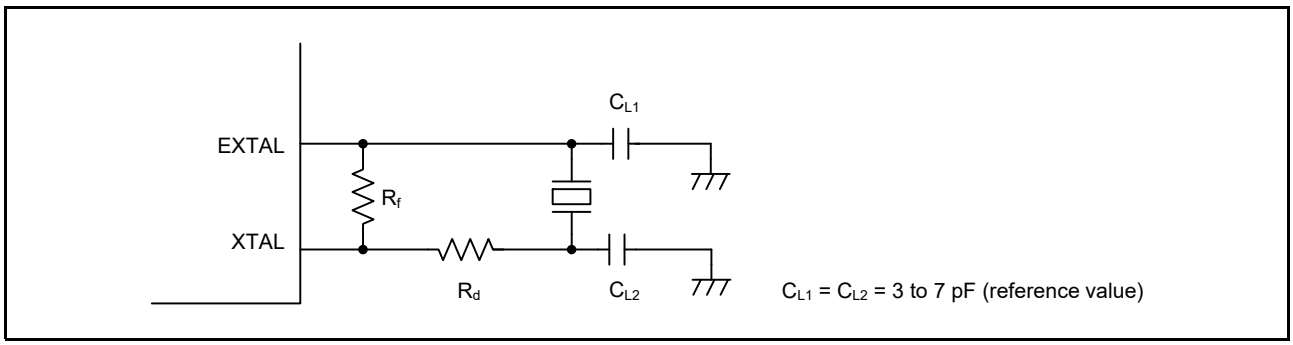

Figure 9.2 Example of Crystal Connection

Table 9.3 Damping Resistance (Reference Values)

Frequency (MHz)	2	8	16	20
Rd (Ω)	0	0	0	0

Figure 9.3 shows an equivalent circuit of the crystal. Use a crystal that has the characteristics shown in Table 9.4 as a reference.

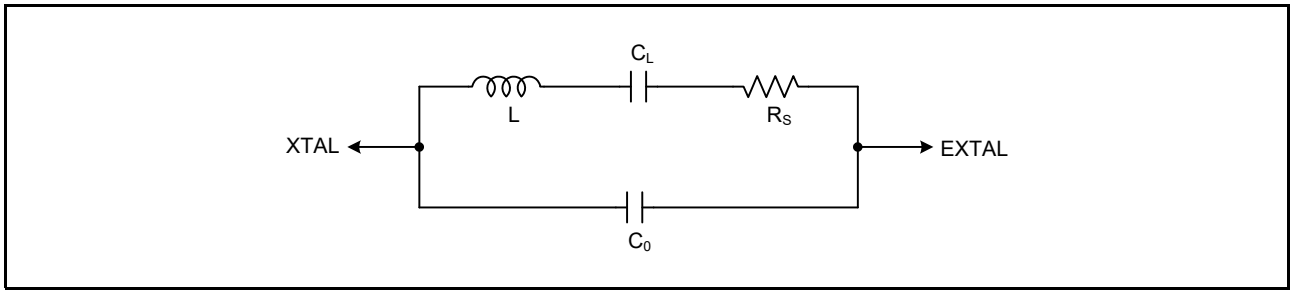

Figure 9.3 Equivalent Circuit of Crystal

Table 9.4 Crystal Characteristics (Reference Values)

Frequency (MHz)	8	12	16
R_S max (Ω)	200	120	56
C_0 max (pF)	1.3	1.3	1.4

9.3.2 External Clock Input

Figure 9.4 shows connection of an external clock. If operation is to be driven by an external clock, set the MOFCR.MOSEL bit to 1 and leave the XTAL pin open-circuit.

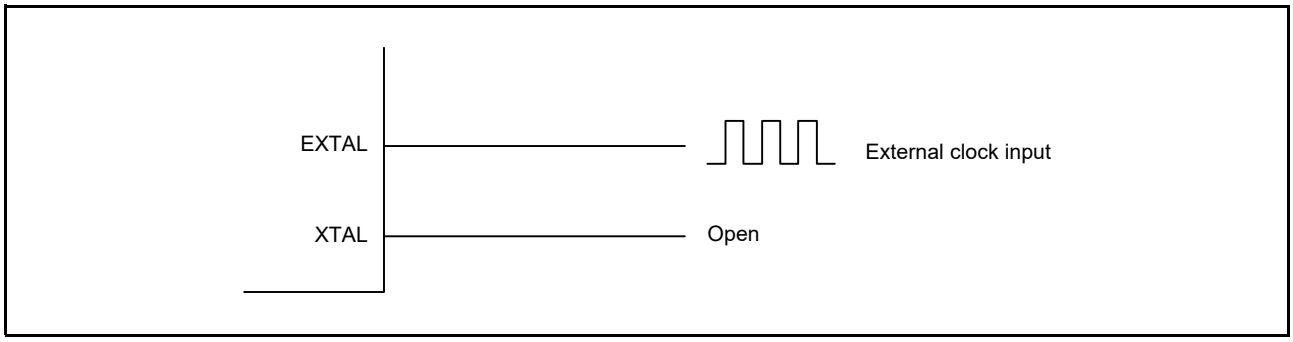

Figure 9.4 Connection Example of External Clock

9.3.3 Handling of Pins When the Main Clock is Not Used

For details on pin handling when the main clock is not used, refer to section 20.5, Handling of Unused Pins.

9.3.4 Notes on the External Clock Input

The frequency of the external clock input can only be changed while the main clock oscillator is stopped. Do not change the frequency of the external clock input while the setting of the main clock oscillator stop bit (MOSCCR.MOSTP) is 0 (main clock oscillator is operating).

9.4 Oscillation Stop Detection Function

9.4.1 Oscillation Stop Detection and Operation after Detection

The oscillation stop detection function is used to detect the main clock oscillator stop and to supply LOCO clock pulses from the low-speed on-chip oscillator as the system clock source instead of the main clock.
An oscillation stop detection interrupt request can be generated when an oscillation stop is detected. In addition, the MTU output can be forcedly driven to the high-impedance on the detection. For details, refer to section 22, Multi-Function Timer Pulse Unit 2 (MTU2a) and section 23, Port Output Enable 2 (POE2a).
In the MCU, the main clock oscillation stop is detected when the input clock remains to be 0 or 1 for a certain period, for example, due to a malfunction of the main clock oscillator (refer to section 39, Electrical Characteristics).
When an oscillation stop is detected, the main clock selected by the clock source select bits (SCKCR3.CKSEL[2:0]) is switched to the LOCO clock by the corresponding selectors in the former stage. Therefore, if an oscillation stop is detected with the main clock selected as the system clock source, the system clock source is switched to the LOCO clock without a change of CKSEL[2:0].
If an oscillation stop is detected while the PLL clock is selected by the clock source select bits (SCKCR3.CKSEL[2:0]), the SCKCR3.CKSEL[2:0] bit value does not change and the PLL clock remains the system clock source. However, the frequency becomes a free-running oscillation frequency.
Switching between the main clock and LOCO clock is controlled by the oscillation stop detection flag (OSTDSR.OSTDF). The clock source is switched to the LOCO clock when the OSTDF flag is 1, and is switched to the main clock again when the OSTDF flag is set to 0. At this time, if the main clock or PLL clock is selected with the CKSEL[2:0] bits, the OSTDF flag cannot be set to 0. To switch the clock source to the main clock or PLL clock again after the oscillation stop detection, set the CKSEL[2:0] bits to a clock source other than the main clock or PLL clock and set the OSTDF flag to 0. After that, check that the OSTDF flag is not 1, and then set the CKSEL[2:0] bits to the main clock or PLL clock after the specified oscillation stabilization time has elapsed.
After a reset is released, the main clock oscillator is stopped and the oscillation stop detection function is disabled. To enable the oscillation stop detection function, activate the main clock oscillator and write 1 to the oscillation stop detection function enable bit (OSTDCR.OSTDE) after a specified oscillation stabilization time has elapsed.
The oscillation stop detection function is provided against the main clock stop by an external cause. Therefore, the oscillation stop detection function should be disabled before the main clock oscillator is stopped by the software or a transition is made to software standby mode.
When the system clock with the main clock selected as the system clock source, CAC main clock (CACMCLK), and CAN clock (CANMCLK) are selected, these clocks are switched to the LOCO clock by the oscillation stop detection.
The system clock (ICLK) frequency during the LOCO clock operation is specified by the LOCO oscillation frequency and the division ratio set by the system clock (ICLK) select bits (SCKCR.ICK[3:0]).
When the PLL clock is selected as the system clock source, these clocks operate at the PLL free-running frequency by the oscillation stop detection.

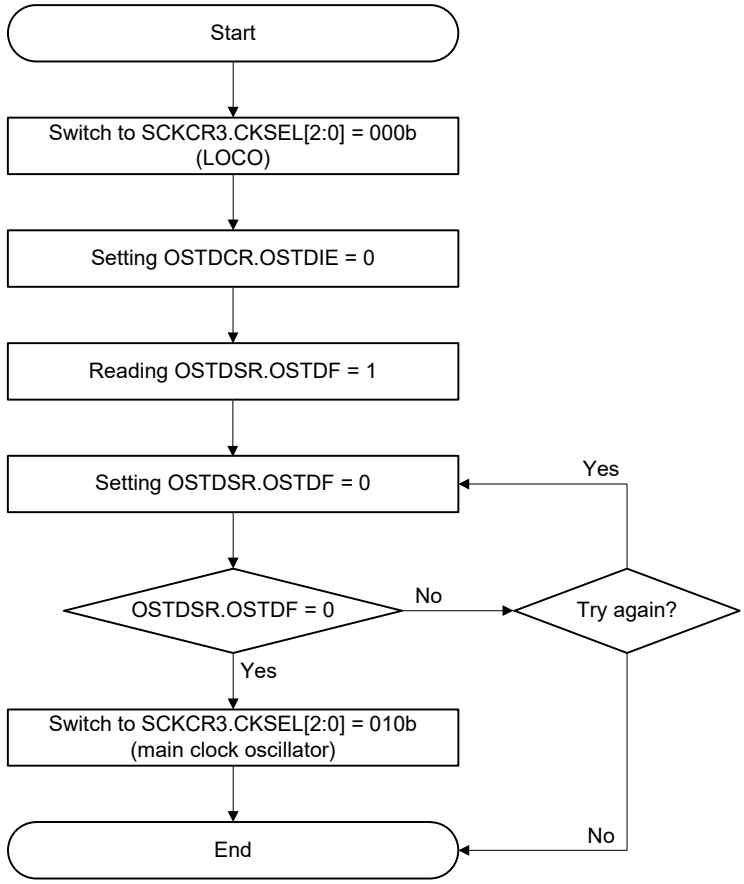

Note: On return from the oscillation-stopped state, the factor responsible for stopping the main clock oscillation circuit must be removed on the user system to allow the return of oscillation.

Figure 9.5 Flow of Recovery from Detection of Oscillator Stop

9.4.2 Oscillation Stop Detection Interrupts

The main clock oscillator stop is notified to port output enable 2 (POE) if the oscillation-stop detection flag (OSTDSR.OSTDF) becomes 1 while the oscillation-stop detection interrupt enable bit (OSTDCR.OSTDIE) is 1 (oscillation stop detection interrupt enabled). On accepting the notification of the oscillation stop, the POE sets the OSTST high-impedance flag in input level control/status register 3 (ICSR3.OSTSTF) to 1. After the oscillation stop is detected, wait for at least 10 cycles of PCLKB before writing to this ICSR3.OSTSTF flag. When the OSTDSR.OSTDF flag requires clearing, do so setting the oscillation stop detection interrupt enable bit (OSTDCR.OSTDIE) to 0. Wait for at least two cycles of PCLKB clock before again setting the OSTDCR.OSTDIE bit to 1. According to the number of cycles for access to read a given I/O register, wait time longer than two cycles of PCLKB may have to be secured.
The oscillation stop detection interrupt is a non-maskable interrupt. Since non-maskable interrupts are disabled in the initial state after a reset release, enable the non-maskable interrupts by the software before using oscillation stop detection interrupts. For details, refer to section 14, Interrupt Controller (ICUb).
When the PLL detects an oscillation stop and is running at its own oscillation frequency, this indicates the occurrence of some system failure. An emergency measure should be taken to handle the failure.

9.5 PLL Circuit

The PLL circuit has a function to multiply the frequency from the oscillator.

9.6 Internal Clock

Clock sources of internal clock signals are the main clock, HOCO clock, LOCO clock, PLL clock, and dedicated low-speed clock for the IWDT. The internal clocks listed below are produced from these sources.

(1) Operating clock of the CPU, DMAC, DTC, ROM, and RAM: System clock (ICLK)
(2) Operating clock of peripheral modules: Peripheral module clock (PCLKA, PCLKB, and PCLKD)
(3) Operating clock of the FlashIF: FlashIF clock (FCLK)
(4) Operating clock of CAN modules: CAN clock (CANMCLK)
(5) Operating clock for the CAC: CAC clock (CACCLK)
(6) Operating clock for the IWDT: IWDT-dedicated low-speed clock (IWDTCLK)
(7) Operating clock for the low-power timer: LPT clock (LPTCLK)

Frequencies of the internal clocks are set by the combination of the divisors selected by the SCKCR.FCK[3:0], ICK[3:0], PCKA[3:0], PCKB[3:0], and PCKD[3:0], the clock source selected by the SCKCR3.CKSEL[2:0] bits, and the bits that select the frequency of the PLL circuit (PLLCR.STC[5:0] and PLIDIV[1:0] bits). If the value of any of these bits is changed, subsequent operation will be at the frequency determined by the new value.

9.6.1 System Clock

The system clock (ICLK) is used as the operating clock of the CPU, DMAC, DTC, ROM, and RAM.
The ICLK frequency is specified by the SCKCR.ICK[3:0] bits, and the SCKCR3.CKSEL[2:0] bits, and the PLLCR.STC[5:0] and PLIDIV[1:0] bits.

9.6.2 Peripheral Module Clock

The peripheral module clocks (PCLKA, PCLKB, and PCLKD) are the operating clocks for use by peripheral modules.
The PCLKA, PCLKB, and PCLKD frequencies are specified by the SCKCR.PCKA[3:0], PCKB[3:0], and PCKD[3:0] bits, the SCKCR3.CKSEL[2:0] bits, and the PLLCR.STC[5:0] and PLIDIV[1:0] bits.
The peripheral module clock used as the operating clock is PCLKD for S12AD, and PCLKA and PCLKB are for other modules.

9.6.3 FlashIF Clock

The FlashIF clock (FCLK) is used as the operating clock of the FlashIF.
The FCLK frequency is specified by the SCKCR.FCK[3:0] bits, and the SCKCR3.CKSEL[2:0] bits, and the PLLCR.STC[5:0] and PLIDIV[1:0] bits.

9.6.4 CAN Clock

The CAN clock (CANMCLK) is an operating clock for the CAN module.
CANMCLK is generated by the main clock oscillator.

9.6.5 CAC Clock

The CAC clock (CACCLK) is an operating clock for the CAC module.

The CACCLK clocks include CACMCLK which is generated by the main clock oscillator, CACHCLK which is generated by the high-speed on-chip oscillator, CACLCLK which is generated by the low-speed on-chip oscillator, and CACILCLK which is generated by the IWDT-dedicated on-chip oscillator.

9.6.6 IWDT-Dedicated Clock

The IWDT-dedicated clock (IWDTCLK) is the operating clock for the IWDT.
IWDTCLK is internally generated by the IWDT-dedicated on-chip oscillator.

9.6.7 Low-Power Timer Clock

The low-power timer clock (LPTCLK) is an operating clock for the low-power timer. The LPTCLK clocks include a clock generated by the IWDT-dedicated on-chip oscillator.

9.7 Usage Notes

9.7.1 Notes on Clock Generation Circuit

(1) The frequencies of the system clock (ICLK), peripheral module clocks (PCLKA, PCLKB, and PCLKD), and FlashIF clock (FCLK) supplied to each module can be selected by the SCKCR register. Each frequency should meet the following:
Select each frequency that is within the operation guaranteed range of clock cycle time (tcyc) specified in AC characteristics of electrical characteristics.
The frequencies must not exceed the ranges listed in Table 9.1.
The peripheral modules operate on the PCLKA, PCLKB and PCLKD. Note therefore that the operating speed of modules such as the timer and SCI varies before and after the frequency is changed.

(2) The relationship of frequencies of the system clock (ICLK), peripheral module clocks A, B, and D (PCLKA, PCLKB, and PCLKD), and FlashIF clock (FCLK) must be set as follows.
ICLK:FCLK = N:1 (N is an integer)
ICLK:PCLKA, PCLKB, and PCLKD = N:1 (N is an integer)

(3) To secure the processing after the clock frequency is changed, modify the pertinent clock control register to change the frequency, and then read the value from the register, and then perform the subsequent processing.

9.7.2 Note on Rewriting the SCKCR3 Register

When the SCKCR3.CKSEL[2:0] bits have been rewritten, the clock output is temporarily stopped to prevent the switch of the clock source from generating a clock pulse of short duration (glitch). The interrupt controller may not detect the following signals that were input during this period.

(1) An external pin interrupt or NMI pin interrupt with a pulse width shorter than 4 cycles of the PCLKB after the switch while the PCLKB frequency is the 1/1 of the clock source (the SCKCR.PCKB[3:0] bits are 0000b).

(2) An external pin interrupt or NMI pin interrupt with a pulse width shorter than 2.5 cycles of the PCLKB after the switch while the PCLKB frequency is the 1/2 of the clock source (the SCKCR.PCKB[3:0] bits are 0001b).

When the external pin interrupt or NMI pin interrupt is in use, input the signal with enough pulse width to exceed the time condition described in (1) and (2).

9.7.3 Notes on Resonator

Since various resonator characteristics relate closely to the user's board design, adequate evaluation is required on the user side before use, referencing the resonator connection example shown in this section. The circuit constants for the resonator depend on the resonator to be used and the stray capacitance of the mounting circuit. Therefore, the circuit constants should be determined in full consultation with the resonator manufacturer. The voltage to be applied between the resonator pins must be within the absolute maximum rating.

9.7.4 Notes on Board Design

When using a crystal, place the resonator and its load capacitors as close to the XTAL and EXTAL pins as possible. Other signal lines should be routed away from the oscillation circuit as shown in Figure 9.6 to prevent electromagnetic induction from interfering with correct oscillation.

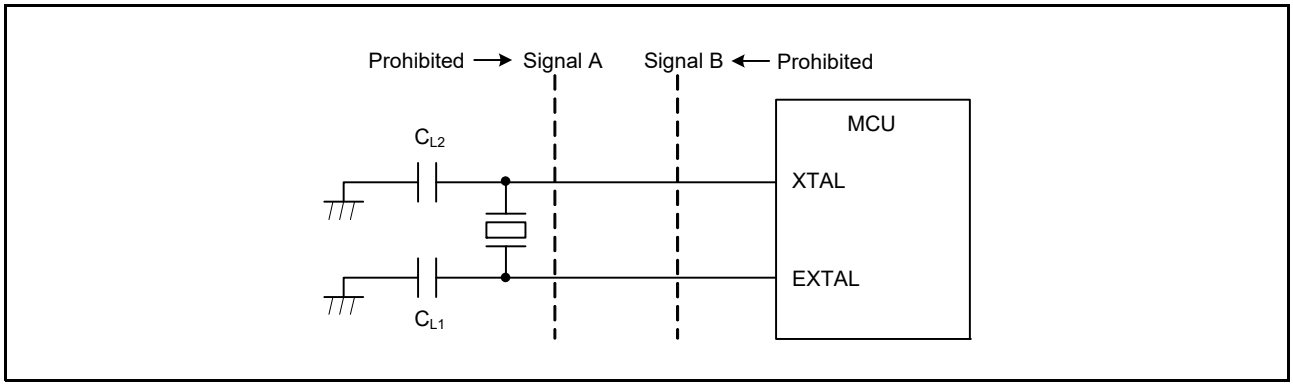

Figure 9.6 Notes on Board Design for Oscillation Circuit

9.7.5 Notes on Resonator Connection Pins

When the main clock is not used, the EXTAL and XTAL pins can be used as general ports P36 and P37. When using these pins as general ports, be sure to stop the main clock (MOSCCR.MOSTP = 1). However, do not use the EXTAL and XTAL pins as general ports P36 and P37 in a system that uses the main clock.
When the main clock is used, do not set P36 and P37 to output.

10. Clock Frequency Accuracy Measurement Circuit (CAC)

This MCU incorporates a/ clock frequency accuracy measurement circuit (CAC).
The CAC counts pulses of the clock to be measured (measurement target clock) within the time generated by the clock to be used as a measurement reference (measurement reference clock), and determines the accuracy depending on whether the number of pulses is within the allowable range.
When measurement is completed or the number of pulses within the time generated by the measurement reference clock is not within the allowable range, an interrupt request is generated.

10.1 Overview

Table 10.1 lists the specifications of the CAC and Figure 10.1 shows a block diagram of the CAC.

Table 10.1 CAC Specifications

Item	Description
Measurement target clocks	The frequency of the following clocks can be measured. • Main clock • HOCO clock • LOCO clock • IWDT-dedicated clock (IWDTCLK) • Peripheral module clock B (PCLKB)
Measurement reference clocks	• External clock input to the CACREF pin • Main clock • HOCO clock • LOCO clock • IWDT-dedicated clock (IWDTCLK) • Peripheral module clock B (PCLKB)
Selectable function	Digital filter function
Interrupt sources	• Measurement end interrupt • Frequency error interrupt • Overflow interrupt
Low power consumption function	Module stop state can be set.

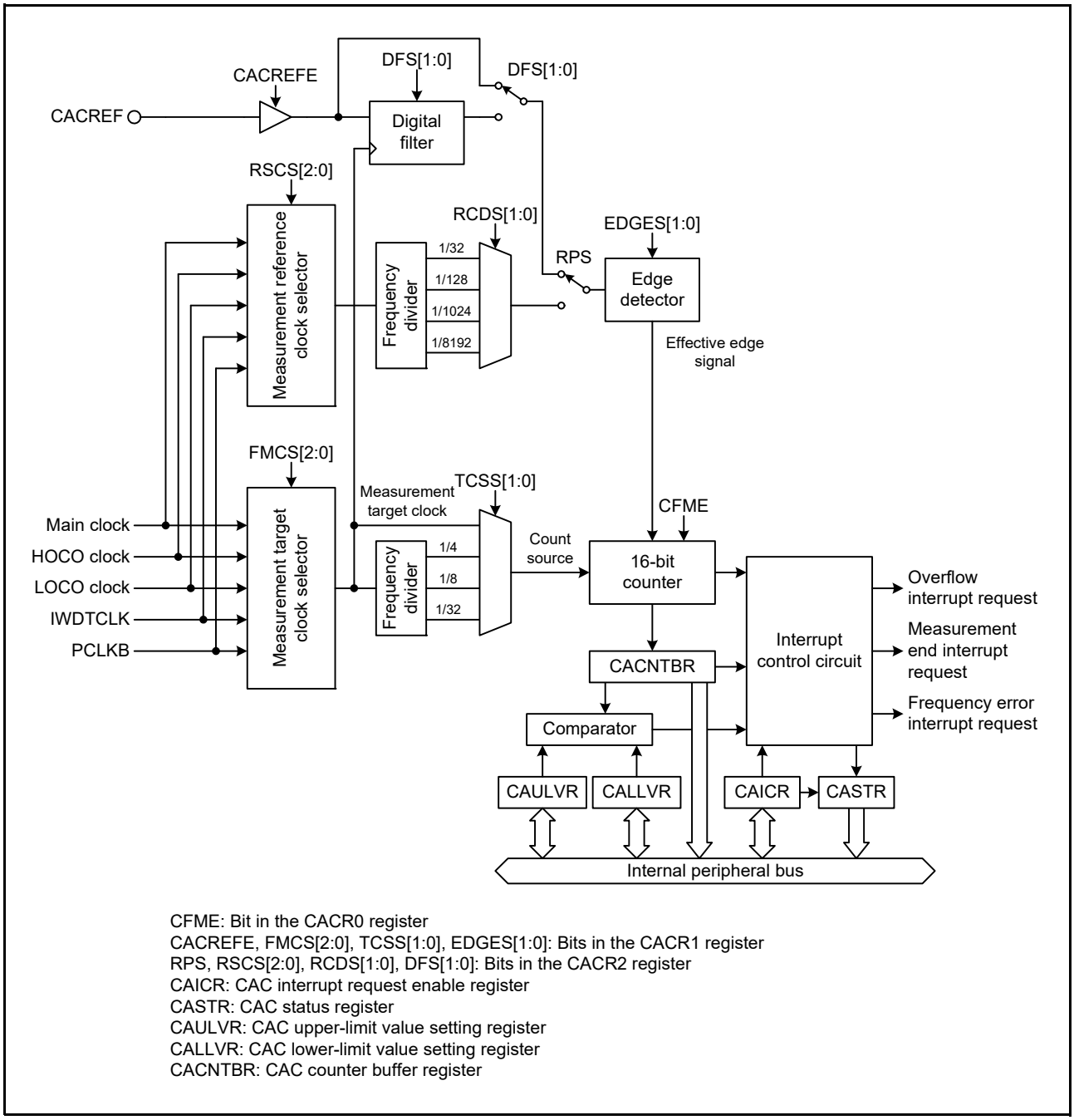

Figure 10.1 CAC Block Diagram

Table 10.2 shows the pin configuration of the CAC.

Table 10.2 Pin Configuration of CAC

Pin Name	I/O	Function
CACREF	Input	Measurement reference clock input pin

10.2 Register Descriptions

10.2.1 CAC Control Register 0 (CACR0)

Address(es): CAC.CACR0 0008 B000h

	b7	b6	b5	b4	b3	b2	b1	b0
	—	—	—	—	—	—	—	CFME
Value after reset:	0	0	0	0	0	0	0	0

Bit	Symbol	Bit Name	Description	R/W
b0	CFME	Clock Frequency Measurement Enable	0: Clock frequency measurement is disabled. 1: Clock frequency measurement is enabled.	R/W
b7 to b1	—	Reserved	These bits are read as 0. The write value should be 0.	R/W

CFME Bit (Clock Frequency Measurement Enable)

This bit specifies whether clock frequency measurement is enabled or disabled.

When rewriting this bit, more time is required than other bits for the new value to be reflected in the register. Further write access to this bit are ignored until the current write access is reflected in the register. Read the bit to confirm that the rewrite has been reflected in the register.

10.2.2 CAC Control Register 1 (CACR1)

Address(es): CAC.CACR1 0008 B001h

	b7	b6	b5	b4	b3	b2	b1	b0
	EDGES[1:0]		TCSS[1:0]		FMCS[2:0]			CACREFE
Value after reset:	0	0	0	0	0	0	0	0

Bit	Symbol	Bit Name	Description	R/W
b0	CACREFE	CACREF Pin Input Enable	0: CACREF pin input is disabled. 1: CACREF pin input is enabled.	R/W
b3 to b1	FMCS[2:0]	Measurement Target Clock Select	b3 b1 0 0 0: Main clock 0 1 0: HOCO clock 0 1 1: LOCO clock 1 0 0: IWDT-dedicated clock (IWDTCLK) 1 0 1: Peripheral module clock B (PCLKB) Settings other than above are prohibited.	R/W
b5, b4	TCSS[1:0]	Timer Count Source Select	b5 b4 0 0: No division 0 1: ×1/4 clock 1 0: ×1/8 clock 1 1: ×1/32 clock	R/W
b7, b6	EDGES[1:0]	Valid Edge Select	b7 b6 0 0: Rising edge 0 1: Falling edge 1 0: Both rising and falling edges 1 1: Setting prohibited	R/W

Note: Set the CACR1 register when the CACR0.CFME bit is 0.

CACREFE Bit (CACREF Pin Input Enable)

This bit specifies whether the CACREF pin input is enabled or disabled.

FMCS[2:0]Bits (Measurement Target Clock Select)

These bits select the measurement target clock whose frequency is to be measured.

TCSS[1:0] Bits (Timer Count Source Select)

These bits select the count source for the clock frequency accuracy measurement circuit.

EDGES[1:0]Bits (Valid Edge Select)

These bits select the valid edge for the reference signal.

10.2.3 CAC Control Register 2 (CACR2)

Address(es): CAC.CACR2 0008 B002h

	b7	b6	b5	b4	b3	b2	b1	b0
	DFS[1:0]		RCDS[1:0]		RSCS[2:0]			RPS
Value after reset:	0	0	0	0	0	0	0	0

Bit	Symbol	Bit Name	Description	R/W
b0	RPS	Reference Signal Select	0: CACREF pin input 1: Internal clock (internally generated signal)	R/W
b3 to b1	RSCS[2:0]	Measurement Reference Clock Select	b3 b1 0 0 0: Main clock 0 1 0: HOCO clock 0 1 1: LOCO clock 1 0 0: IWDT-dedicated clock (IWDTCLK) 1 0 1: Peripheral module clock B (PCLKB) Settings other than above are prohibited.	R/W
b5, b4	RCDS[1:0]	Measurement Reference Clock Frequency Division Ration Select	b5 b4 0 0: ×1/32 clock 0 1: ×1/128 clock 1 0: ×1/1024 clock 1 1: ×1/8192 clock	R/W
b7, b6	DFS[1:0]	Digital Filter Select	b7 b6 0 0: Digital filtering is disabled. 0 1: The sampling clock for the digital filter is the measurement target clock. 1 0: The sampling clock for the digital filter is the measurement target clock divided by 4. 1 1: The sampling clock for the digital filter is the measurement target clock divided by 16.	R/W

Note: Set the CACR2 register when the CACR0.CFME bit is 0.

RPS Bit (Reference Signal Select)

This bit selects whether to use the CACREF pin input or an internal clock (internally generated signal) as the reference signal.

RSCS[2:0]Bits (Measurement Reference Clock Select)

These bits select the clock source for generating the measurement reference clock.

RCDS[1:0]Bits (Measurement Reference Clock Frequency Division Ration Select)

These bits select the frequency division ratio of the measurement reference clock.

DFS[1:0]Bits (Digital Filter Select)

The setting of these bits enables or disables the digital filter and selects its sampling clock.

10.2.4 CAC Interrupt Request Enable Register (CAICR)

Address(es): CAC.CAICR 0008 B003h

	b7	b6	b5	b4	b3	b2	b1	b0
	—	OVFFCL	MENDFCL	FERRFCL	—	OVFIE	MENDIE	FERRIE
Value after reset:	0	0	0	0	0	0	0	0

Bit	Symbol	Bit Name	Description	R/W
b0	FERRIE	Frequency Error Interrupt Request Enable	0: Frequency error interrupt request is disabled. 1: Frequency error interrupt request is enabled.	R/W
b1	MENDIE	Measurement End Interrupt Request Enable	0: Measurement end interrupt request is disabled. 1: Measurement end interrupt request is enabled.	R/W
b2	OVFIE	Overflow Interrupt Request Enable	0: Overflow interrupt request is disabled. 1: Overflow interrupt request is enabled.	R/W
b3	—	Reserved	This bit is read as 0. The write value should be 0.	R/W
b4	FERRFCL	FERRF Clear	When 1 is written to this bit, the CASTR.FERRF flag is cleared. This bit is read as 0.	R/W
b5	MENDFCL	MENDF Clear	When 1 is written to this bit, the CASTR.MENDF flag is cleared. This bit is read as 0.	R/W
b6	OVFFCL	OVFF Clear	When 1 is written to this bit, the CASTR.OVFF flag is cleared. This bit is read as 0.	R/W
b7	—	Reserved	This bit is read as 0. The write value should be 0.	R/W

FERRIE Bit (Frequency Error Interrupt Request Enable)

This bit specifies whether the frequency error interrupt request is enabled or disabled.

MENDIE Bit (Measurement End Interrupt Request Enable)

This bit specifies whether the measurement end interrupt request is enabled or disabled.

OVFIE Bit (Overflow Interrupt Request Enable)

This bit specifies whether the overflow interrupt request is enabled or disabled.

FERRFCL Bit (FERRF Clear)

Setting this bit to 1 clears the CASTR.FERRF flag.

MENDFCL Bit (MENDF Clear)

Setting this bit to 1 clears the CASTR.MENDF flag.

OVFFCL Bit (OVFF Clear)

Setting this bit to 1 clears the CASTR.OVFF flag.

10.2.5 CAC Status Register (CASTR)

Address(es): CAC.CASTR 0008 B004h

	b7	b6	b5	b4	b3	b2	b1	b0
	—	—	—	—	—	OVFF	MENDF	FERRF
Value after reset:	0	0	0	0	0	0	0	0

Bit	Symbol	Bit Name	Description	R/W
b0	FERRF	Frequency Error Flag	0: The clock frequency is within the range corresponding to the settings. 1: The clock frequency has deviated beyond the range corresponding to the settings (frequency error).	R
b1	MENDF	Measurement End Flag	0: Measurement is in progress. 1: Measurement has ended.	R
b2	OVFF	Overflow Flag	0: The counter has not overflowed. 1: The counter has overflowed.	R
b7 to b3	—	Reserved	These bits are read as 0. The write value should be 0.	R/W

FERRF Flag (Frequency Error Flag)

This flag indicates deviation of the clock frequency from the set value (frequency error).

[Setting condition]

- The clock frequency is outside of the setting range.

[Clearing condition]

- 1 is written to the CAICR.FERRFCL bit.

MENDF Flag (Measurement End Flag)

This flag indicates the end of measurement.

[Setting condition]

- Measurement has finished.

[Clearing condition]

- 1 is written to the CAICR.MENDFCL bit.

OVFF Flag (Overflow Flag)

This flag indicates that the counter has overflowed.

[Setting condition]

- The counter has overflowed.

[Clearing condition]

- 1 is written to the CAICR.OVFFCL bit.

10.2.6 CAC Upper-Limit Value Setting Register (CAULVR)

Address(es): CAC.CAULVR 0008 B006h

	b15	b14	b13	b12	b11	b10	b9	b8	b7	b6	b5	b4	b3	b2	b1	b0
Value after reset:	0	0	0	0	0	0	0	0	0	0	0	0	0	0	0	0

The CAULVR register is a 16-bit readable/writable register that specifies the upper-limit value of the counter used for measuring the frequency. When the frequency rises above the value specified in this register, a frequency error is detected.
Write to this register when the CACR0.CFME bit is 0.
The counter value held in the CACNTBR register can vary with the difference between the phases of the digital filter and edge-detection circuit on the one hand and the signal on the CACREF pin on the other, so ensure that this setting allows an adequate margin.

10.2.7 CAC Lower-Limit Value Setting Register (CALLVR)

Address(es): CAC.CALLVR 0008 B008h

	b15	b14	b13	b12	b11	b10	b9	b8	b7	b6	b5	b4	b3	b2	b1	b0
Value after reset:	0	0	0	0	0	0	0	0	0	0	0	0	0	0	0	0

The CALLVR register is a 16-bit readable/writable register that specifies the lower-limit value of the counter used for measuring the frequency. When the frequency falls below the value specified in this register, a frequency error is detected.
Write to this register when the CACR0.CFME bit is 0.
The counter value held in the CACNTBR register can vary with the difference between the phases of the digital filter and edge-detection circuit on the one hand and the signal on the CACREF pin on the other, so ensure that this setting allows an adequate margin.

10.2.8 CAC Counter Buffer Register (CACNTBR)

Address(es): CAC.CACNTBR 0008 B00Ah

	b15	b14	b13	b12	b11	b10	b9	b8	b7	b6	b5	b4	b3	b2	b1	b0
Value after reset:	0	0	0	0	0	0	0	0	0	0	0	0	0	0	0	0

The CACNTBR register is a 16-bit read-only register that retains the counter value at the time a valid reference signal edge is input.

10.3 Operation

10.3.1 Measuring Clock Frequency

The clock frequency accuracy measurement circuit measures the clock frequency using the CACREF pin input or the internal clock as a reference. Figure 10.2 shows an operating example of the clock frequency accuracy measurement circuit.

The clock frequency accuracy measurement circuit operates as shown below when measuring the clock frequency.

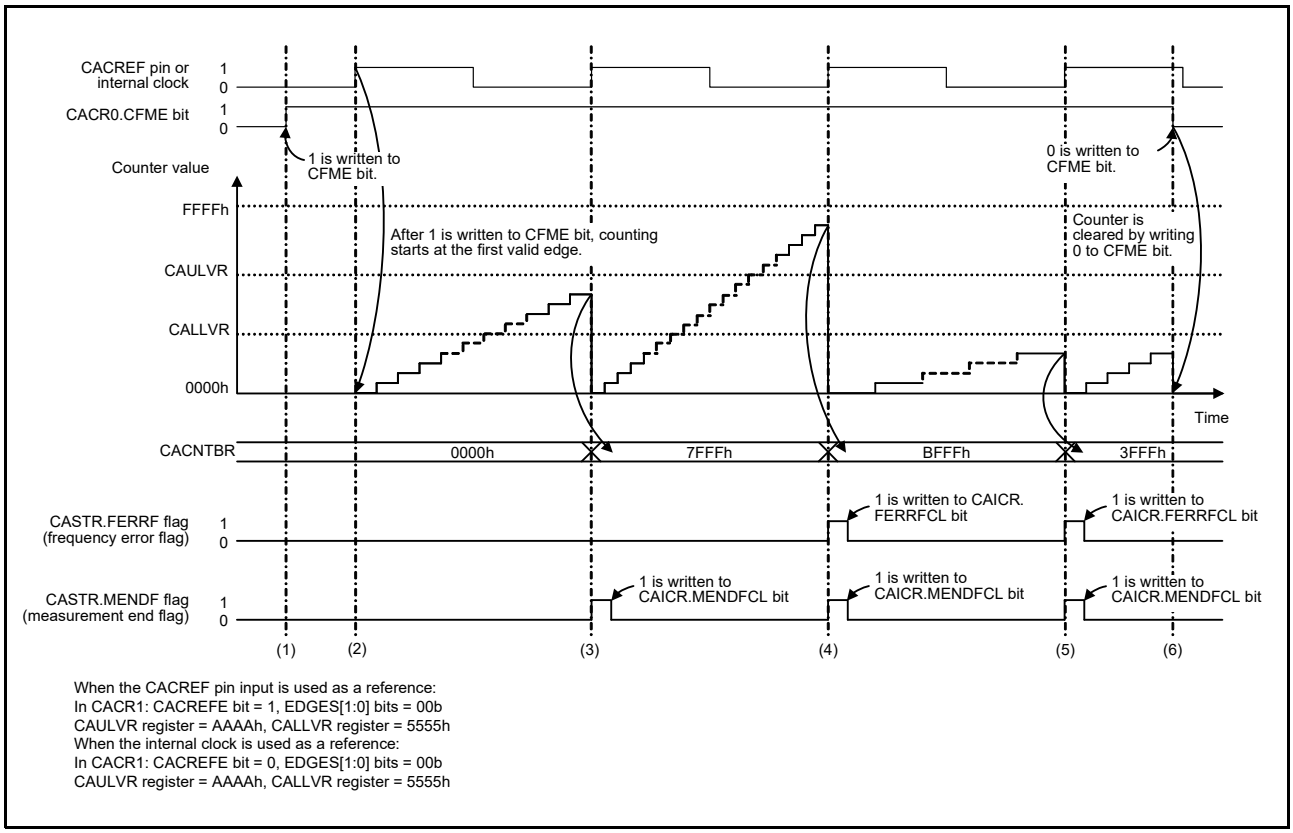

Figure 10.2 Operating Example of Clock Frequency Accuracy Measurement Circuit

(1) When the CACREF pin input is used as a reference (the CACR1.CACREFE bit = 1), clock frequency measurement is enabled by writing 1 to the CACR0.CFME bit while the CACR2.RPS bit is 0 and the CACR1.CACREFE bit is 1. On the other hand, when the internal clock is used as a reference (the CACR1.CACREFE bit = 0), clock frequency measurement is enabled by writing 1 to the CACR0.CFME bit while the CACR2.RPS bit is 1.

(2) When the CACREF pin input is used as a reference, the timer starts up-counting if the valid edge selected by the CACR1.EDGES[1:0] bits is input from the CACREF pin after 1 is written to the CFME bit. The valid edge is a rising edge (the CACR1.EDGES[1:0] bits = 00b) in Figure 10.2.
When the internal clock is used as a reference, the timer starts up-counting if the valid edge selected by the CACR1.EDGES[1:0] bits is input based on the clock source selected by the CACR2.RSCS[2:0] bits after 1 is written to the CFME bit. The valid edge is a rising edge (the CACR1.EDGES[1:0] bits = 00b) in Figure 10.2.

(3) When the next valid edge is input, the counter value is transferred in the CACNTBR register and compared with the values of the CAULVR and CALLVR registers. If the formula CALLVR ≤ CACNTBR ≤ CAULVR is satisfied, only the CASTR.MENDF flag is set to 1 because the clock frequency is correct. If the CAICR.MENDIE bit is 1, a measurement end interrupt is generated.

(4) When the next valid edge is input, the counter value is transferred in the CACNTBR register and compared with the values of the CAULVR and CALLVR registers. In the case of CACNTBR > CAULVR, the CASTR.FERRF flag is set to 1 because the clock frequency is erroneous. If the CAICR.FERRIE bit is 1, a frequency error interrupt is

generated. Also, the CASTR.MENDF flag is set to 1. If the CAICR.MENDIE bit is 1, a measurement end interrupt is generated.

(5) When the next valid edge is input, the counter value is transferred in the CACNTBR register and compared with the values of the CAULVR and CALLVR registers. In the case of CACNTBR < CALLVR, the CASTR.FERRF flag is set to 1 because the clock frequency is erroneous. If the CAICR.FERRIE bit is 1, a frequency error interrupt is generated. Also, the CASTR.MENDF flag is set to 1. If the CAICR.MENDIE bit is 1, a measurement end interrupt is generated.

(6) While the CACR0.CFME bit is 1, the counter value is transferred in the CACNTBR register and compared with the values of the CAULVR and CALLVR registers every time a valid edge is input. Writing 0 to the CACR0.CFME bit clears the counter and stops up-counting.

10.3.2 Digital Filtering of Signals on the CACREF Pin

The CACREF pin has a digital filter. Levels on the target pin for sampling are conveyed to the internal circuitry after matching three consecutive times at the selected sampling interval and the same level continues to be conveyed internally until the level on the pin again matches three consecutive times.

Enabling and disabling of the digital filter and its sampling clock are selectable.

The counter value transferred in the CACNTBR register may be in error by up to one cycle of the sampling clock due to the difference between the phases of the digital filter and the signal input to the CACREF pin.

When a frequency dividing clock is selected as a count source, the counter value error is obtained by the following formula:

Counter value error = (One cycle of the count source) / (One cycle of the sampling clock)

10.4 Interrupt Requests

The CAC generates three types of interrupt request: frequency error interrupt, measurement end interrupt, and overflow interrupt. When an interrupt source is generated, the corresponding status flag becomes 1. Table 10.3 lists details on the interrupt requests of the clock frequency accuracy measurement circuit.

Table 10.3 Interrupt Requests of Clock Frequency Accuracy Measurement Circuit

Interrupt Request	Interrupt Enable Bit	Status Flag	Interrupt Source
Frequency error interrupt	CAICR.FERRIE	CASTR.FERRF	The result of comparing CACNTBR to CAULVR and CALLVR is either CACNTBR > CAULVR or CACNTBR < CALLVR.
Measurement end interrupt	CAICR.MENDIE	CASTR.MENDF	A valid edge is input from the CACREF pin. Note however that a measurement end interrupt does not occur at the first valid edge after writing 1 to the CACR0.CFME bit.
Overflow interrupt	CAICR.OVFIE	CASTR.OVFF	The counter has overflowed.

10.5 Usage Notes

10.5.1 Module Stop Function Setting

CAC operation can be disabled or enabled using module stop control register C (MSTPCRC). The initial setting is for the CAC to be halted. Register access is enabled by releasing the module stop state. For details, refer to section 11, Low Power Consumption.

11. Low Power Consumption

11.1 Overview

This MCU has several functions for reducing power consumption, by setting clock dividers, stopping modules, changing to low power consumption mode in normal operation, and changing to operating power control mode.
Table 11.1 lists the specifications of low power consumption functions, and Table 11.2 lists the conditions to change to low power consumption modes, states of the CPU and peripheral modules, and the method for exiting each mode.
After a reset, this MCU returns to normal mode, but modules except the DMAC, DTC, and RAM are stopped.

Table 11.1 Specifications of Low Power Consumption Functions

Item	Specification
Clock divider functions	The frequency division ratio can be set independently for the system clock (ICLK), high speed peripheral module clock (PCLKA), peripheral module clock (PCLKB), S12AD clock (PCLKD), and FlashIF clock (FCLK).*1
Module stop function	Each peripheral module can be stopped independently by the module stop control register.
Function for transition to low power consumption mode	Transition to a low power consumption mode in which the CPU, peripheral modules, or oscillators are stopped is enabled.
Low power consumption modes	• Sleep mode • Deep sleep mode • Software standby mode
Operating power control modes	• Power consumption can be reduced in normal operation, sleep mode, and deep sleep mode by selecting an appropriate operating power control mode according to the operating frequency and operating voltage. • Two operating power control modes are available High-speed operating mode Middle-speed operating mode

Note 1. For details, refer to section 9, Clock Generation Circuit.

Table 11.2 Operating Conditions of Each Power Consumption Mode

	Sleep Mode	Deep Sleep Mode	Software Standby Mode
Entry trigger	Control register + instruction	Control register + instruction	Control register + instruction
Exit trigger	Interrupt	Interrupt	Interrupt*1
After exiting from each mode, CPU begins from*2	Interrupt handling	Interrupt handling	Interrupt handling
Main clock oscillator	Operating possible	Operating possible	Stopped
High-speed on-chip oscillator	Operating possible	Operating possible	Stopped
Low-speed on-chip oscillator	Operating possible	Operating possible	Stopped
IWDT-dedicated on-chip oscillator	Operating possible*3	Operating possible*3	Operating possible*3
PLL	Operating possible	Operating possible	Stopped
CPU	Stopped (Retained)	Stopped (Retained)	Stopped (Retained)
RAM (0000 0000h to 0000 FFFFh)	Operating possible (Retained)	Stopped (Retained)	Stopped (Retained)
DMAC	Operating possible*5	Stopped (Retained)	Stopped (Retained)
DTC	Operating possible*5	Stopped (Retained)	Stopped (Retained)
Flash memory	Operating	Stopped (Retained)	Stopped (Retained)
Independent watchdog timer (IWDT)	Operating possible*3	Operating possible*3	Operating possible*3
Low power timer (LPT)	Operating possible*6	Operating possible*6	Operating possible*6
Voltage detection circuit (LVD)	Operating possible	Operating possible	Operating possible
Power-on reset circuit	Operating	Operating	Operating
Peripheral modules	Operating possible	Operating possible	Stopped (Retained)*4
I/O ports	Operating	Operating	Retained
CLKOUT	Operating possible	Operating possible	Stopped

“Operating possible” means that operating or stopped can be controlled by the register setting.
“Stopped (Retained)” means that internal register values are retained and internal operations are suspended.

Note 1. “Interrupts” here indicates an external pin interrupt (the NMI or IRQ0 to IRQ7) or any of peripheral interrupts (IWDT, voltage monitoring, and ELC (LPT-dedicated interrupt) interrupts).
Note 2. This does not include a RES# pin reset, power-on reset, voltage monitoring reset, or independent watchdog-timer reset. One of these reset sources initiate transition to reset state.
Note 3. Operating or stopping is selected by setting the IWDT sleep mode count stop control bit (IWDTSLCSTP) in option function select register 0 (OFS0) in IWDT auto-start mode. In any mode other than IWDT auto-start mode, operating or stopping is selected by the setting of the sleep mode count stop control bit (SLCSTP) in the IWDT count stop control register (IWDTCSTPR).
Note 4. The peripheral logic states are retained.
Note 5. During sleep mode, do not write to the system control related registers (indicated by ‘SYSTEM’ in the Module Symbol column in Table 5.1, List of I/O Registers (Address Order).
Note 6. When the low-power timer clock source select bit in the low-power timer control register 1 (LPTCR1.LPCNTCKSEL) is 1 (selecting IWDT-dedicated on-chip oscillator), operating or stopping can be selected as described in Note 3.

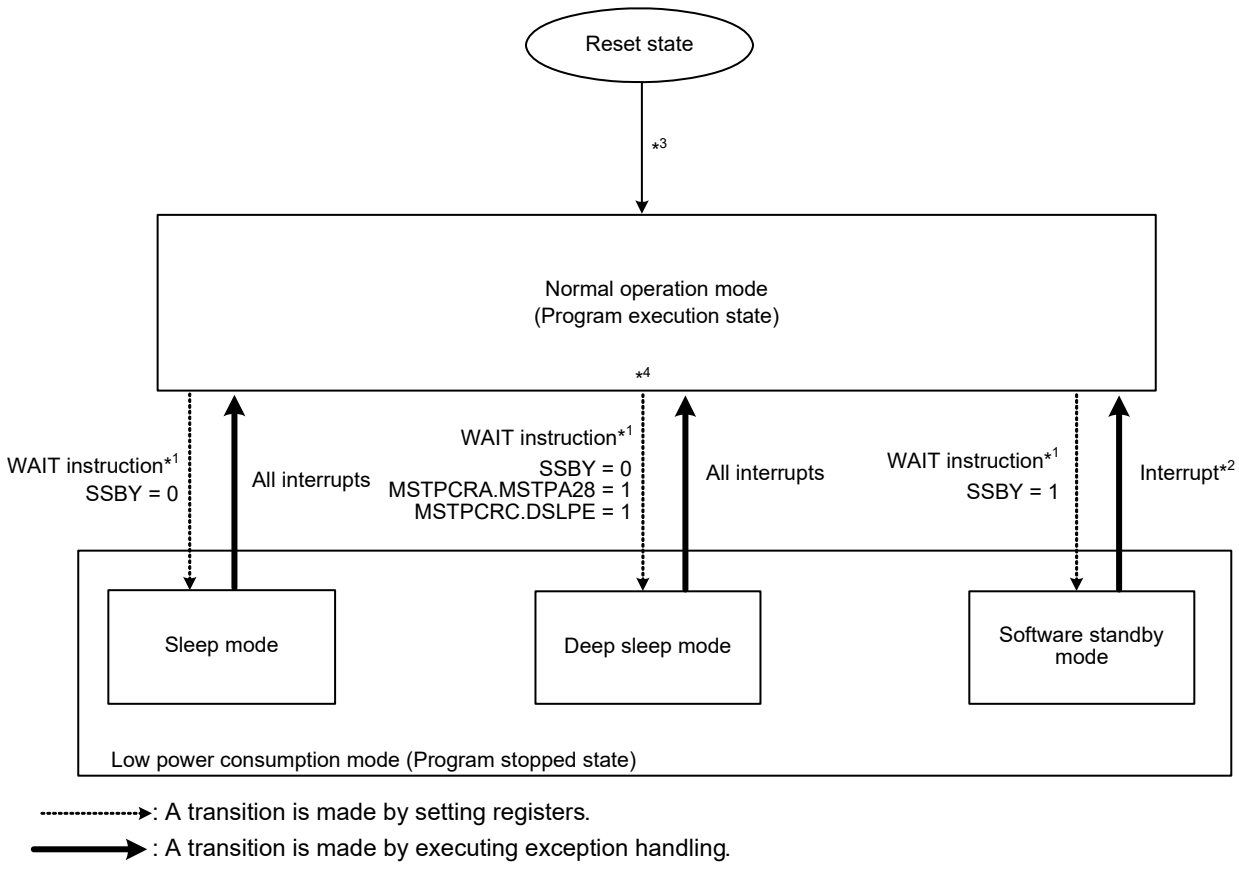

Note 1. If an interrupt is accepted while entering low power consumption mode, the transition to the program stop state is exited and the interrupt exception handling is executed.
Note 2. “Interrupts” here indicates an external pin interrupt (the NMI or IRQ0 to IRQ7) or any of peripheral interrupts (the IWDT, voltage monitoring, and ELC (LPT-dedicated interrupt) interrupts).
Note 3. The LOCO is the source of the operating clock following a transition from the reset state to normal operating mode.
Note 4. Makes a transition from sleep mode, deep sleep mode, or software standby mode to normal operating mode by an interrupt.
For deep sleep mode and software standby mode, the clock source after exiting is the same as that of the clock before entering software standby mode.

Transition to the reset state is made at any state instantly after a RES# pin reset, power on reset, voltage monitoring reset, IWDT reset, or software reset is generated.

Figure 11.1 Mode Transitions

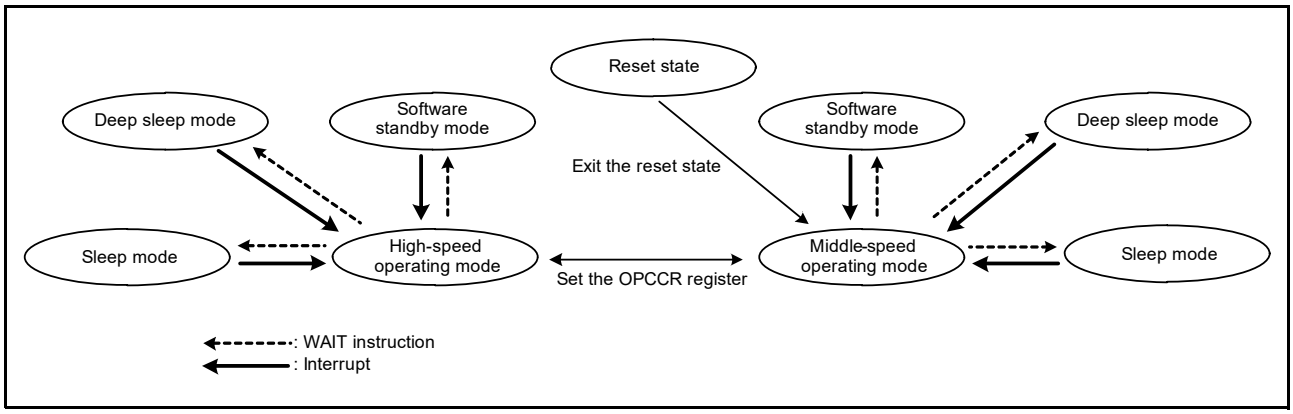

Figure 11.2 Operating Modes

- It is possible to return from sleep mode to the previous operating state used before entering sleep mode.
- After exiting the reset state, operation starts in middle-speed operating mode.

11.2 Register Descriptions

11.2.1 Standby Control Register (SBYCR)

Address(es): SYSTEM.SBYCR 0008 000Ch

	b15	b14	b13	b12	b11	b10	b9	b8	b7	b6	b5	b4	b3	b2	b1	b0
	SSBY	—	—	—	—	—	—	—	—	—	—	—	—	—	—	—
Value after reset:	0	1	0	0	0	0	0	0	0	0	0	0	0	0	0	0

Bit	Symbol	Bit Name	Description	R/W
b13 to b0	—	Reserved	These bits are read as 0. The write value should be 0.	R/W
b14	—	Reserved	This bit is read as 1. The write value should be 1.	R/W
b15	SSBY	Software Standby	0: Set entry to sleep mode or deep sleep mode after the WAIT instruction is executed 1: Set entry to software standby mode after the WAIT instruction is executed	R/W

Note: Set the PRCR.PRC1 bit to 1 (write enabled) before rewriting this register.

SSBY Bit (Software Standby)

The SSBY bit specifies the transition destination after the WAIT instruction is executed.
When the SSBY bit is set to 1, the MCU enters software standby mode after execution of the WAIT instruction. When the MCU returns to normal mode after an interrupt has triggered and exits from software standby mode, the SSBY bit remains 1. The SSBY bit can be cleared by writing 0 to the SSBY bit.

When the oscillation stop detection function enable bit (OSTDCR.OSTDE) in the oscillation stop detection control register is 1, the set value of the SSBY bit is invalid. Even if the SSBY bit is 1, the MCU will enter sleep mode or deep sleep mode after execution of the WAIT instruction.

11.2.2 Module Stop Control Register A (MSTPCRA)

Address(es): SYSTEM.MSTPCRA 0008 0010h

	b31	b30	b29	b28	b27	b26	b25	b24	b23	b22	b21	b20	b19	b18	b17	b16
	—	—	—	MSTPA 28	—	MSTPA 26	MSTPA 25	—	—	—	—	—	—	—	MSTPA 17	MSTPA 16
Value after reset:	1	1	1	0	1	1	1	1	1	1	1	1	1	1	1	1

	b15	b14	b13	b12	b11	b10	b9	b8	b7	b6	b5	b4	b3	b2	b1	b0
	MSTPA 15	—	—	—	—	—	MSTPA 9	—	—	—	MSTPA 5	MSTPA 4	—	—	—	—
Value after reset:	1	1	1	1	1	1	1	1	1	1	1	1	1	1	1	1

Bit	Symbol	Bit Name	Description	R/W
b3 to b0	—	Reserved	These bits are read as 1. The write value should be 1.	R/W
b4	MSTPA4	8-bit Timer 3 and 2 (Unit 1) Module Stop	Target module: TMR3, TMR2 0: This module clock is enabled 1: This module clock is disabled	R/W
b5	MSTPA5	8-bit Timer 1 and 0 (Unit 0) Module Stop	Target module: TMR1, TMR0 0: This module clock is enabled 1: This module clock is disabled	R/W
b8 to b6	—	Reserved	These bits are read as 1. The write value should be 1.	R/W
b9	MSTPA9	Multifunction Timer Pulse Unit 2 Module Stop	Target module: MTU (MTU0 to MTU5) 0: This module clock is enabled 1: This module clock is disabled	R/W
b14 to b10	—	Reserved	These bits are read as 1. The write value should be 1.	R/W
b15	MSTPA15	Compare Match Timer (Unit 0) Module Stop	Target module: CMT unit 0 (CMT0, CMT1) 0: This module clock is enabled 1: This module clock is disabled	R/W
b16	MSTPA16	AFE Module Stop	Target module: AFE 0: This module clock is enabled 1: This module clock is disabled	R/W
b17	MSTPA17	12-Bit A/D Converter Module Stop	Target module: S12AD 0: This module clock is enabled 1: This module clock is disabled	R/W
b24 to b18	—	Reserved	These bits are read as 1. The write value should be 1.	R/W
b25	MSTPA25	DSAD0 Module Stop	Target module: DSAD0 0: This module clock is enabled 1: This module clock is disabled	R/W
b26	MSTPA26	DSAD1 Module Stop	Target module: DSAD1 0: This module clock is enabled 1: This module clock is disabled	R/W
b27	—	Reserved	This bit is read as 1. The write value should be 1.	R/W
b28	MSTPA28	DMA Controller / Data Transfer Controller Module Stop	Target module: DMAC/DTC 0: This module clock is enabled 1: This module clock is disabled	R/W
b31 to b29	—	Reserved	These bits are read as 1. The write value should be 1.	R/W

Note: Set the PRCR.PRC1 bit to 1 (write enabled) before rewriting this register.

11.2.3 Module Stop Control Register B (MSTPCRB)

Address(es): SYSTEM.MSTPCRB 0008 0014h

	b31	b30	b29	b28	b27	b26	b25	b24	b23	b22	b21	b20	b19	b18	b17	b16
	—	MSTPB 30	—	—	—	MSTPB 26	MSTPB 25	—	MSTPB 23	—	MSTPB 21	—	—	—	MSTPB 17	—
Value after reset:	1	1	1	1	1	1	1	1	1	1	1	1	1	1	1	1

	b15	b14	b13	b12	b11	b10	b9	b8	b7	b6	b5	b4	b3	b2	b1	b0
	—	—	—	—	—	—	MSTPB 9	—	—	MSTPB 6	—	MSTPB 4	—	—	—	MSTPB 0
Value after reset:	1	1	1	1	1	1	1	1	1	1	1	1	1	1	1	1

Bit	Symbol	Bit Name	Description	R/W
b0	MSTPB0*1	RSCAN0 Module Stop	Target module: RSCAN0 0:This module clock is enabled 1: This module clock is disabled	R/W
b3 to b1	—	Reserved	These bits are read as 1. The write value should be 1.	R/W
b4	MSTPB4	Serial Communication Interface SCIh Module Stop	Target module: SCIh (SCI12) 0: This module clock is enabled 1: This module clock is disabled	R/W
b5	—	Reserved	This bit is read as 1. The write value should be 1.	R/W
b6	MSTPB6	DOC Module Stop	Target module: DOC 0: This module clock is enabled 1: This module clock is disabled	R/W
b8, b7	—	Reserved	These bits are read as 1. The write value should be 1.	R/W
b9	MSTPB9	ELC Module Stop	Target module: ELC 0: This module clock is enabled 1: This module clock is disabled	R/W
b16 to b10	—	Reserved	These bits are read as 1. The write value should be 1.	R/W
b17	MSTPB17	Serial Peripheral Interface 0 Module Stop	Target module: RSPI0 0: This module clock is enabled 1: This module clock is disabled	R/W
b20 to b18	—	Reserved	These bits are read as 1. The write value should be 1.	R/W
b21	MSTPB21	I^2C Bus Interface 0 Module Stop	Target module: RIIC0 0: This module clock is enabled 1: This module clock is disabled	R/W
b22	—	Reserved	This bit is read as 1. The write value should be 1.	R/W
b23	MSTPB23	CRC Calculator Module Stop	Target module: CRC 0: This module clock is enabled 1: This module clock is disabled	R/W
b24	—	Reserved	This bit is read as 1. The write value should be 1.	R/W
b25	MSTPB25	Serial Communication Interface 6 Module Stop	Target module: SCI6 0: This module clock is enabled 1: This module clock is disabled	R/W
b26	MSTPB26	Serial Communication Interface 5 Module Stop	Target module: SCI5 0: This module clock is enabled 1: This module clock is disabled	R/W
b29 to b27	—	Reserved	These bits are read as 1. The write value should be 1.	R/W
b30	MSTPB30	Serial Communication Interface 1 Module Stop	Target module: SCI1 0: This module clock is enabled 1: This module clock is disabled	R/W
b31	—	Reserved	This bit is read as 1. The write value should be 1.	R/W

Note: Set the PRCR.PRC1 bit to 1 (write enabled) before rewriting this register.

Note 1. This bit should be rewritten while the oscillation of the clock to be controlled by this bit is stable. When entering software standby mode after rewriting this bit, wait for two cycles of the CANMCLK after rewriting, and execute a WAIT instruction.

11.2.4 Module Stop Control Register C (MSTPCRC)

Address(es): SYSTEM.MSTPCRC 0008 0018h

	b31	b30	b29	b28	b27	b26	b25	b24	b23	b22	b21	b20	b19	b18	b17	b16
	DSLPE	—	—	—	—	—	—	—	—	—	—	—	MSTPC19	—	—	—
Value after reset:	0	1	1	1	1	1	1	1	1	1	1	1	1	1	1	1

	b15	b14	b13	b12	b11	b10	b9	b8	b7	b6	b5	b4	b3	b2	b1	b0
	—	—	—	—	—	—	—	—	—	—	—	—	—	—	—	MSTPC0
Value after reset:	0	0	0	0	0	0	0	0	0	0	0	0	0	0	0	0

Bit	Symbol	Bit Name	Description	R/W
b0	MSTPC0	RAM Module Stop*1	Target module: RAM (0000 0000h to 0000 FFFFh) 0: RAM operating 1: RAM stopped	R/W
b15 to b1	—	Reserved	These bits are read as 0. The write value should be 0.	R/W
b18 to b16	—	Reserved	These bits are read as 1. The write value should be 1.	R/W
b19	MSTPC19	Clock Frequency Accuracy Measurement Circuit Module Stop*2	Target module: CAC 0: This module clock is enabled 1: This module clock is disabled	R/W
b30 to b20	—	Reserved	These bits are read as 1. The write value should be 1.	R/W
b31	DSLPE	Deep Sleep Mode Enable	0: Deep sleep mode is disabled 1: Deep sleep mode is enabled	R/W

Note: Set the PRCR.PRC1 bit to 1 (write enabled) before rewriting this register.
Note 1. The MSTPC0 bit should not be set to 1 during access to the RAM. The RAM should not be accessed while the MSTPC0 bit is 1.
Note 2. The MSTPC19 bit should be rewritten while the oscillation of the clock to be controlled by this bit is stable. For entering software standby mode after rewriting this bit, wait for two cycles of the slowest clock among the clocks output by the oscillators actually oscillating and execute the WAIT instruction.

DSLPE Bit (Deep Sleep Mode Enable)

The DSLPE bit enables or disables a transition to deep sleep mode.

When the CPU executes the WAIT instruction with the DSLPE bit set to 1 and the SBYCR.SSBY and MSTPCRA.MSTPA28 bits meet specified conditions, the MCU enters deep sleep mode. For details, refer to section 11.6.2, Deep Sleep Mode.

11.2.5 Operating Power Control Register (OPCCR)

Address(es): SYSTEM.OPCCR 0008 00A0h

	b7	b6	b5	b4	b3	b2	b1	b0
	—	—	—	OPCMTSF	—	OPCM[2:0]		
Value after reset:	0	0	0	0	0	0	1	0

Bit	Symbol	Bit Name	Description	R/W
b2 to b0	OPCM[2:0]	Operating Power Control Mode Select	b2 b0 0 0 0: High-speed operating mode 0 1 0: Middle-speed operating mode Settings other than above are prohibited.	R/W
b3	—	Reserved	This bit is read as 0. The write value should be 0.	R/W
b4	OPCMTSF	Operating Power Control Mode Transition Status Flag	0: Transition completed 1: During transition	R
b7 to b5	—	Reserved	These bits are read as 0. The write value should be 0.	R/W

Note: Set the PRCR.PRC1 bit to 1 (write enabled) before rewriting this register.

The OPCCR register is used to reduce power consumption in normal operating mode, sleep mode, and deep sleep mode. Power consumption can be reduced according to the operating frequency and operating voltage to be used by the OPCCR setting.

The OPCCR register cannot be rewritten under the following conditions:

- When the OPCCR.OPCMTSF flag is 1 (during transition)
- Time period from WAIT instruction execution for a sleep mode transition, until exit from sleep mode to normal operation
- Time period from WAIT instruction execution for a deep sleep mode transition, until exit from deep sleep mode to normal operation

The OPCCR register cannot be rewritten while the flash memory is being programmed or erased (P/E).
For the procedures of changing operating power control modes, refer to Function in section 11.5, Function for Lower Operating Power Consumption.
During sleep mode or mode transitions, do not write to the registers related to system control (indicated by 'SYSTEM' in the Module Symbol column in Table 5.1, List of I/O Registers (Address Order)).

OPCM[2:0] Bits (Operating Power Control Mode Select)

The OPCM[2:0] bits select operating power control mode in normal operating mode, sleep mode, and deep sleep mode. Table 11.3 shows the relationship between operating power control modes, the OPCM[2:0]bit settings, and the operating frequency and voltage ranges.

OPCMTSF Flag (Operating Power Control Mode Transition Status Flag)

This flag indicates the switching control state during and after operating power mode transition.
This flag becomes 1 when the value of the OPCM[2:0] bits is rewritten, and 0 when mode transition is completed. Read this flag and confirm that it is 0 before proceeding to the next processing. Only rewrite the OPCM[2:0] bits when this flag is 0.

Table 11.3 Operating Frequency and Voltage Ranges in Operating Power Control Modes

Operating Power Control Mode	OPCM[2:0] Bits	Operating Voltage Range	Operating Frequency Range					
			Flash Memory Read Frequency					Flash Memory Programming/ Erasure Frequency
			ICLK	FCLK	PCLKD	PCLKB	PCLKA	FCLK
High-speed operating mode	000b	2.7 to 5.5 V	Up to 32 MHz	Up to 32 MHz	Up to 32 MHz	Up to 32 MHz	Up to 32 MHz	1 to 32 MHz
		2.4 to 2.7 V	Up to 16 MHz	Up to 16 MHz	Up to 16 MHz	Up to 16 MHz	Up to 16 MHz	—
		1.8 to 2.4 V	Up to 8 MHz	Up to 8 MHz	Up to 8 MHz	Up to 8 MHz	Up to 8 MHz	—
Middle-speed operating mode	010b	2.4 to 5.5 V	Up to 12 MHz	Up to 12 MHz	Up to 12 MHz	Up to 12 MHz	Up to 12 MHz	1 to 12 MHz
		1.8 to 2.4 V	Up to 8 MHz	Up to 8 MHz	Up to 8 MHz	Up to 8 MHz	Up to 8 MHz	1 to 8 MHz

Note: When using the FCLK at lower than 4 MHz during programming or erasing the flash memory, the frequency can be set to 1, 2, or 3 MHz.

Each operating power control mode is described below.

- High-Speed Operating Mode

The maximum operating frequency during FLASH read is 32 MHz for ICLK, FCLK, PCLKA, PCLKB, and PCLKD. The operating voltage range is 1.8 to 5.5 V during FLASH read. However, for ICLK, FCLK, PCLKA, PCLKB, and PCLKD, the maximum operating frequency during FLASH read is 16 MHz when the operating voltage is 2.4 V or larger and smaller than 2.7 V. The maximum operating frequency during FLASH read is 8 MHz for all the clocks when the operating voltage is 1.8 V or larger and smaller than 2.4 V.
During FLASH programming/erasure, the operating frequency range is 1 to 32 MHz and the operating voltage range is 2.7 to 5.5 V.
Figure 11.3 shows the operating voltages and frequencies in high-speed operating mode.

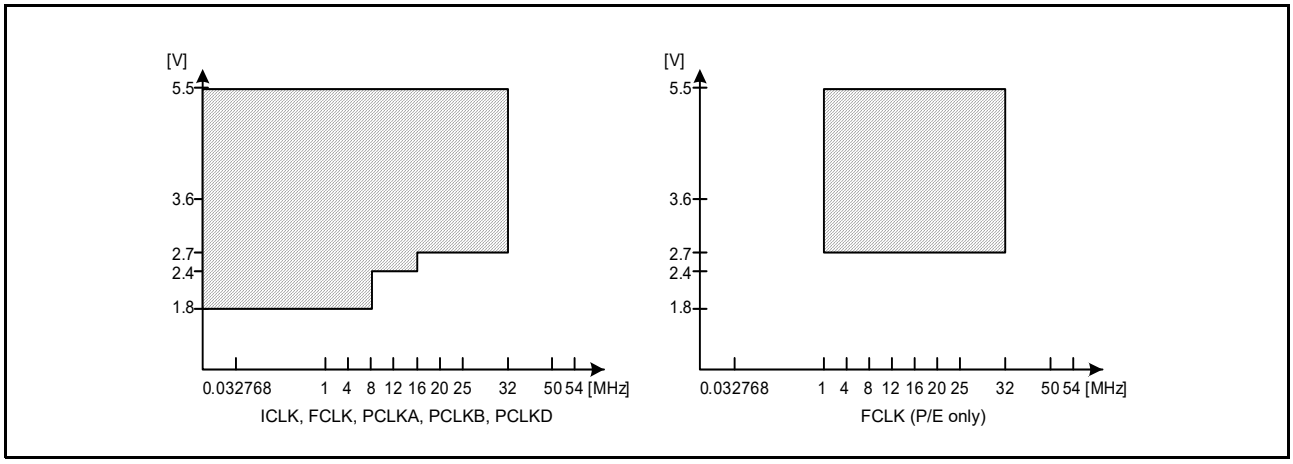

Figure 11.3 Operating Voltages and Frequencies in High-Speed Operating Mode

Note: When using the FCLK at lower than 4 MHz during programming or erasing the flash memory, the frequency can be set to 1, 2, or 3 MHz.

- Middle-Speed Operating Mode

As compared to high-speed operating mode, this mode reduces power consumption for low-speed operation.
The maximum operating frequency during FLASH read is 12 MHz for ICLK, FCLK, PCLKA, PCLKB, and PCLKD.
The operating voltage range is 1.8 to 5.5 V during FLASH read. The maximum operating frequency during FLASH read is 8 MHz for all the clocks when the operating voltage is 1.8 V or larger and smaller than 2.4 V.
During FLASH programming/erasure, the operating frequency range is 1 to 12 MHz and the operating voltage range is 1.8 to 5.5 V. The maximum operating frequency during FLASH programming/erasure is 8 MHz when the operating voltage is 1.8 V or larger and smaller than 2.4 V.
The power consumption of this mode is lower than that of high speed mode under the same conditions.
After release from a reset state, operation is started from this mode.
Figure 11.4 shows the operating voltages and frequencies in middle-speed operating mode.

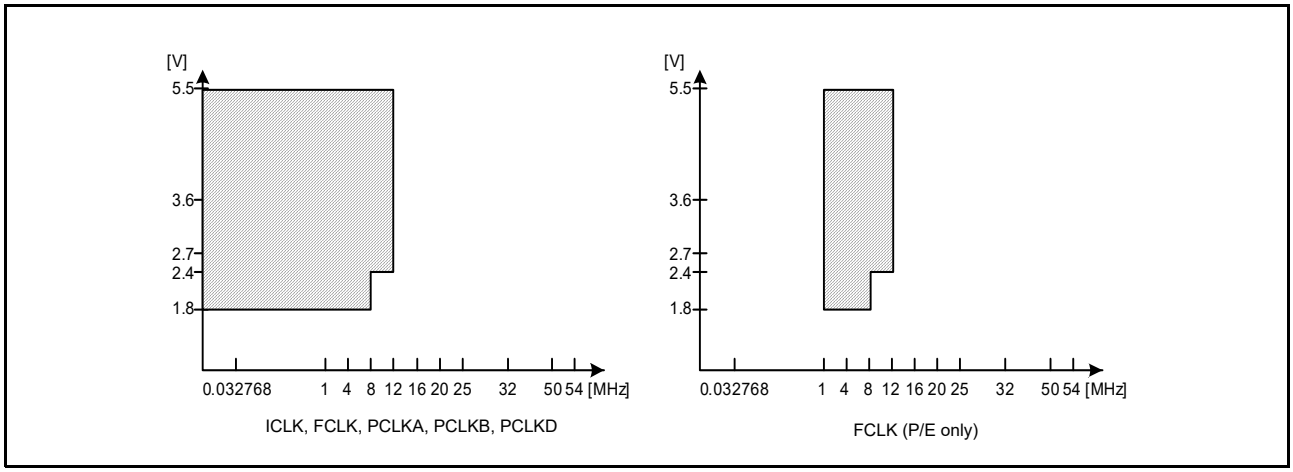

Figure 11.4 Operating Voltages and Frequencies in Middle-Speed Operating Mode

Note: When using the FCLK at lower than 4 MHz during programming or erasing the flash memory, the frequency can be set to 1, 2, or 3 MHz.

11.3 Reducing Power Consumption by Switching Clock Signals

The clock frequency can change by setting the SCKCR.FCK[3:0], ICK[3:0], PCKA[3:0], PCKB[3:0], and PCKD[3:0] bits. The CPU, DMAC, DTC, ROM, and RAM clocks can be set by the ICK[3:0] bits. The peripheral module clocks can be set by the PCKA[3:0], PCKB[3:0], and PCKD[3:0] bits.
The flash memory clock can be set by the FCK[3:0] bits.
For details, refer to section 9, Clock Generation Circuit.

11.4 Module Stop Function

The module stop function can be set for each on-chip peripheral module.
When the MSTPmi bit (m = A to C; i = 0 to 31) in MSTPCRA to MSTPCRC is set to 1, the specified module stops operating and enters the module stop state, but the CPU continues to operate independently. When the corresponding MSTPmi bit is set to 0, the module exits the module state and restarts operating at the end of the bus cycle. The internal states of modules are retained in the module stop state.
After release from a reset state, all modules other than the DMAC, DTC, and on-chip RAM are in the module stop state. Basically the registers in the module stop state cannot be read or written. However, note that data may be written to these registers if write access is made immediately after the setting of the module stop state. To avoid this, always write to the module stop registers after confirming that the last register setting is done.

11.5 Function for Lower Operating Power Consumption

By selecting an appropriate operating power control mode according to the operating frequency and operating voltage, power consumption can be reduced in normal mode, sleep mode, and deep sleep mode.

11.5.1 Setting Operating Power Control Mode

Examples of the procedures for switching operating power control modes are shown below:

(1) Switching from Normal Power Consumption Mode to Low Power Consumption Mode

- From high-speed operating mode to middle-speed operating mode

(High-speed operation in high-speed operating mode)
↓
Set the frequency of each clock to lower than the maximum operating frequency for middle-speed operating mode
↓
Confirm that the OPCCR.OPCMTSF flag is 0 (transition completed)
↓
Set the OPCCR.OPCM[2:0] bits to 010b (middle-speed operating mode)
↓
Confirm that the OPCCR.OPCMTSF flag is 0 (transition completed)
↓
(Middle-speed operation in middle-speed operating mode)

(2) Switching from Low Power Consumption Mode to Normal Power Consumption Mode

- From middle-speed operating mode to high-speed operating mode

Middle-speed operation in middle-speed operating mode
↓

Confirm that the OPCCR.OPCMTSF flag is 0 (transition completed)

↓

Set the OPCCR.OPCM[2:0] bits to 000b (high-speed operating mode)

↓

Confirm that the OPCCR.OPCMTSF flag is 0 (transition completed)

↓

Set the frequency of each clock to lower than the maximum operating frequency for high-speed operating mode

↓

High-speed operation in high-speed operating mode

11.6 Low Power Consumption Modes

11.6.1 Sleep Mode

11.6.1.1 Entry to Sleep Mode

When the WAIT instruction is executed while the SBYCR.SSBY bit is 0, the CPU enters sleep mode. In sleep mode, the CPU stops operating but the contents of its internal registers are retained. Other peripheral functions do not stop.
Counting by the IWDT stops if a transition to sleep mode is made while the IWDT is being used in auto-start mode and the OFS0.IWDTSLCSTP bit is 1. In the same way, counting by the IWDT stops if a transition to sleep mode is made while the IWDT is being used in register start mode and the IWDTCSTPR.SLCSTP bit is 1.
Furthermore, counting by the IWDT continues if a transition to sleep mode is made while the IWDT is being used in auto-start mode and the OFS0.IWDTSLCSTP bit is 0 (counting by the IWDT continues through transitions to low power consumption modes). In the same way, counting by the IWDT continues if a transition to sleep mode is made while the IWDT is being used in register start mode and the IWDTCSTPR.SLCSTP bit is 0.
To use sleep mode, make the following settings and then execute a WAIT instruction.

(1) Set the PSW.I bit*1 of the CPU to 0.
(2) Set the interrupt request destination*2 to be used for exit from sleep mode.
(3) Set the priority*3 of the interrupt to be used for exit from sleep mode to a level higher than the setting of the PSW.IPL[3:0] bits*1 of the CPU.
(4) Set the IERm.IENj bit*3 to 1 for the interrupt.
(5) Read the I/O register that is written last and confirm that the written value has been reflected.
(6) Execute the WAIT instruction (this automatically sets the I bit*1 in the PSW of the CPU to 1).

Note 1. For details, refer to section 2, CPU.
Note 2. For details, refer to section 14.4.3, Selecting Interrupt Request Destinations.
Note 3. For details, refer to section 14, Interrupt Controller (ICUb).

11.6.1.2 Exit from Sleep Mode

Exit from sleep mode is initiated by any interrupt, a RES# pin reset, a power-on reset, a voltage monitoring reset, or a reset caused by an IWDT underflow.

- Initiated by an interrupt
  An interrupt initiates exit from sleep mode and the interrupt exception handling starts. If a maskable interrupt has been masked by the CPU (the priority level*1 of the interrupt has been set to a value lower than that of the PSW.IPL[3:0] bits*2 of the CPU), sleep mode is not exited.
- Initiated by a RES# pin reset
  When the RES# pin is driven low, the MCU enters the reset state. When the RES# pin is driven high after the reset signal is input for a predetermined time period, the CPU starts the reset exception handling.
- Initiated by a power-on reset
  A power-on reset asserts a reset to the MCU.
  When a power-on reset is negated by a rise in the supply voltage, the CPU starts the reset exception handling.
- Initiated by a voltage monitoring reset
  A voltage monitoring reset asserts a reset to the MCU.
  When a voltage monitoring reset is negated by a rise in the supply voltage, the CPU starts the reset exception handling.
- Initiated by an independent watchdog timer reset
  An internal reset generated by an IWDT underflow asserts a reset to the MCU. However, when IWDT counting is stopped in sleep mode by setting OFS0.IWDTSTRT = 0 and OFS0.IWDTSLCSTP = 1, or OFS0.IWDTSTRT = 1 and IWDTCSTPR.SLCSTP = 1, the IWDT is stopped in sleep mode and sleep mode is not exited by the independent watchdog timer reset.

Note 1. For details, refer to section 14, Interrupt Controller (ICUb).
Note 2. For details, refer to section 2, CPU.

11.6.2 Deep Sleep Mode

11.6.2.1 Entry to Deep Sleep Mode

When a WAIT instruction is executed with the MSTPCRC.DSLPE bit set to 1, the MSTPCRA.MSTPA28 bit set to 1, and the SBYCR.SSBY bit cleared to 0, a transition to deep sleep mode is made*1.
In deep sleep mode, the CPU and the DMAC, DTC, ROM, and RAM clocks stop. Peripheral functions do not stop.
Counting by the IWDT stops if a transition to deep sleep mode is made while the IWDT is being used in auto-start mode and the OFS0.IWDTSLCSTP bit is 1. In the same way, counting by the IWDT stops if a transition to deep sleep mode is made while the IWDT is being used in register start mode and the IWDTCSTPR.SLCSTP bit is 1.
Furthermore, counting by the IWDT continues if a transition to deep sleep mode is made while the IWDT is being used in auto-start mode and the OFS0.IWDTSLCSTP bit is 0 (counting by the IWDT continues through transitions to low power consumption modes). In the same way, counting by the IWDT continues if a transition to deep sleep mode is made while the IWDT is being used in register start mode and the IWDTCSTPR.SLCSTP bit is 0.

To use deep sleep mode, make the following settings and then execute a WAIT instruction.
(1) Set the PSW.I bit*2 of the CPU to 0.
(2) Set the interrupt request destination*3 to be used for exit from deep sleep mode.
(3) Set the priority*4 of the interrupt to be used for exit from deep sleep mode to a level higher than the setting of the PSW.IPL[3:0] bits*2 of the CPU.
(4) Set the IERm.IENj bit*4 to 1 for the interrupt.
(5) Read the I/O register that is written last and confirm that the written value has been reflected.
(6) Execute a WAIT instruction (executing a WAIT instruction causes automatic setting of the PSW.I bit*2 of the CPU to 1).

Note 1. The MCU cannot be placed in the deep sleep mode if the DTC is currently operating. Set the DTCST.DTCST bit in the DTC to 0 to deactivate the DTC before setting the MSTPCRA.MSTPA28 bit to 1.
Note 2. For details, refer to section 2, CPU.
Note 3. For details, refer to section 14.4.3, Selecting Interrupt Request Destinations.
Note 4. For details, refer to section 14, Interrupt Controller (ICUb).

11.6.2.2 Exit from Deep Sleep Mode

Exit from deep sleep mode is initiated by any interrupt, a RES# pin reset, a power-on reset, a voltage monitoring reset, or a reset caused by an IWDT underflow.

- Initiated by an interrupt
  An interrupt initiates exit from deep sleep mode and the interrupt exception handling starts. If a maskable interrupt has been masked by the CPU (the priority level*1 of the interrupt has been set to a value lower than that of the PSW.IPL[3:0] bits*2 of the CPU), deep sleep mode is not exited.
- Initiated by the RES# pin reset
  When the RES# pin is driven low, the MCU enters the reset state. When the RES# pin is driven high after the reset signal is input for a predetermined time period, the CPU starts the reset exception handling.
- Initiated by a power-on reset
  A power-on reset asserts a reset to the MCU.
  When a power-on reset is negated by a rise in the supply voltage, the CPU starts the reset exception handling.
- Initiated by a voltage monitoring reset
  A voltage monitoring reset asserts a reset to the MCU.
  When a voltage monitoring reset is negated by a rise in the supply voltage, the CPU starts the reset exception handling.
- Initiated by the independent watchdog timer
  An internal reset generated by an IWDT underflow asserts a reset to the MCU. However, when IWDT counting is stopped in deep sleep mode by setting OFS0.IWDTSTRT = 0 and OFS0.IWDTSLCSTP = 1, or OFS0.IWDTSTRT = 1 and IWDTCSTPR.SLCSTP = 1, the IWDT is stopped in deep sleep mode and deep sleep mode is not exited by the independent watchdog timer reset.

Note 1. For details, refer to section 14, Interrupt Controller (ICUb).
Note 2. For details, refer to section 2, CPU.

11.6.3 Software Standby Mode

11.6.3.1 Entry to Software Standby Mode

When a WAIT instruction is executed with the SBYCR.SSBY bit set to 1, a transition to software standby mode is made. All functions except the CPU and on-chip peripheral functions stop in this mode. However, the contents of the CPU internal registers, RAM data, the states of on-chip peripheral functions, and the I/O ports are retained. Software standby mode allows significant reduction in power consumption because the oscillator stops in this mode.
Set the DMAST.DMST bit of the DMAC and the DTCST.DTCST bit of the DTC to 0 before executing the WAIT instruction.
Counting by the IWDT stops if a transition to software standby mode is made while the IWDT is being used in auto-start mode and the OFS0.IWDTSLCSTP bit is 1. In the same way, counting by the IWDT stops if a transition to software standby mode is made while the IWDT is being used in register start mode and the IWDTCSTPR.SLCSTP bit is 1.

Furthermore, counting by the IWDT continues if a transition to software standby mode is made while the IWDT is being used in auto-start mode and the OFS0.IWDTSLCSTP bit is 0 (counting by the IWDT continues through transitions to low power consumption modes). In the same way, counting by the IWDT continues if a transition to software standby mode is made while the IWDT is being used in register start mode and the IWDTCSTPR.SLCSTP bit is 0.
When the oscillation stop detection function is enabled (OSTDCR.OSTDE = 1), software standby mode cannot be entered. To make a transition to software standby mode, execute a WAIT instruction after disabling the oscillation stop detection function (OSTDCR.OSTDE = 0).
To use software standby mode, make the following settings and then execute a WAIT instruction.

(1) Set the PSW.I bit*1 of the CPU to 0.
(2) Set the interrupt request destination*2 to be used for recovery from software standby mode to the CPU.
(3) Set the priority*3 of the interrupt to be used for recovery from software standby mode to a level higher than the setting of the PSW.IPL[3:0] bits*1 of the CPU.
(4) Set the IERm.IENj bit*3 to 1 for the interrupt.
(5) Read the I/O register that is written last and confirm that the written value has been reflected.
(6) Execute a WAIT instruction (executing a WAIT instruction causes automatic setting of the PSW.I bit*1 of the CPU to 1).

Note 1. For details, refer to section 2, CPU.
Note 2. For details, refer to section 14.4.3, Selecting Interrupt Request Destinations.
Note 3. For details, refer to section 14, Interrupt Controller (ICUb).

11.6.3.2 Exit from Software Standby Mode

Exit from software standby mode is initiated by an external pin interrupt (the NMI or IRQ0 to IRQ7), peripheral function interrupts (the IWDT, voltage monitoring, and ELC (LPT-dedicated interrupt)), a RES# pin reset, a power-on reset, a voltage monitoring reset, or an independent watchdog timer reset. When any trigger which initiates exit from software standby mode is asserted, the oscillators which were operating before entry to software standby mode restart operation. After the oscillation of all these oscillators has been stabilized, operation returns from software standby mode.

- Initiated by an interrupt
  When an interrupt request from among the NMI, IRQ0 to IRQ7, IWDT, voltage monitoring, and ELC (LPT-dedicated interrupt) interrupts is generated, each of the oscillators which was operating before the transition to software standby mode resumes oscillation. After the oscillation stabilization wait time of each oscillator has elapsed, the MCU exits software standby mode and interrupt exception processing starts.
- Initiated by a RES# pin reset
  Clock oscillation starts when the low level is applied to the RES# pin. Clock supply for the MCU starts at the same time. Keep the level on the RES# pin low over the time required for oscillation of the clocks to become stable. Reset exception processing starts when the high level is applied to the RES# pin.
- Initiated by a power-on reset
  A power-on reset asserts a reset to the MCU.
  When a power-on reset is negated by a rise in the supply voltage, the CPU starts the reset exception handling.
- Initiated by a voltage monitoring reset
  A voltage monitoring reset asserts a reset to the MCU.
  When a voltage monitoring reset is negated by a rise in the supply voltage, the CPU starts the reset exception handling.
- Initiated by an independent watchdog timer reset
  An internal reset generated by an IWDT underflow asserts a reset to the MCU.
  Note that the independent watchdog timer is stopped in software standby mode due to the register settings (OFS0.IWDTSTRT = 0 and OFS0.IWDTSLCSTP = 1, or OFS0.IWDTSTRT = 1 and IWDTCSTPR.SLCSTP = 1) in software standby mode. In that case, exit from software standby mode by the independent watchdog timer reset cannot be done.

11.6.3.3 Example of Software Standby Mode Application

Figure 11.5 shows an example of entry to software standby mode by the falling edge of the IRQn pin, and exit from software standby mode by the rising edge of the IRQn pin.

In this example, an IRQn interrupt is accepted with the IRQCRi.IRQMD[1:0] bits of the ICU set to 01b (falling edge), and then the IRQCRi.IRQMD[1:0] bits are set to 10b (rising edge). After that, the SBYCR.SSBY bit is set to 1 and the WAIT instruction is executed. Thus entry to software standby mode is completed. After that, exit from software standby mode is initiated by the rising edge of the IRQn pin.

To exit software standby mode, settings of the interrupt controller (ICU) are also necessary. For details, refer to section 14, Interrupt Controller (ICUb).

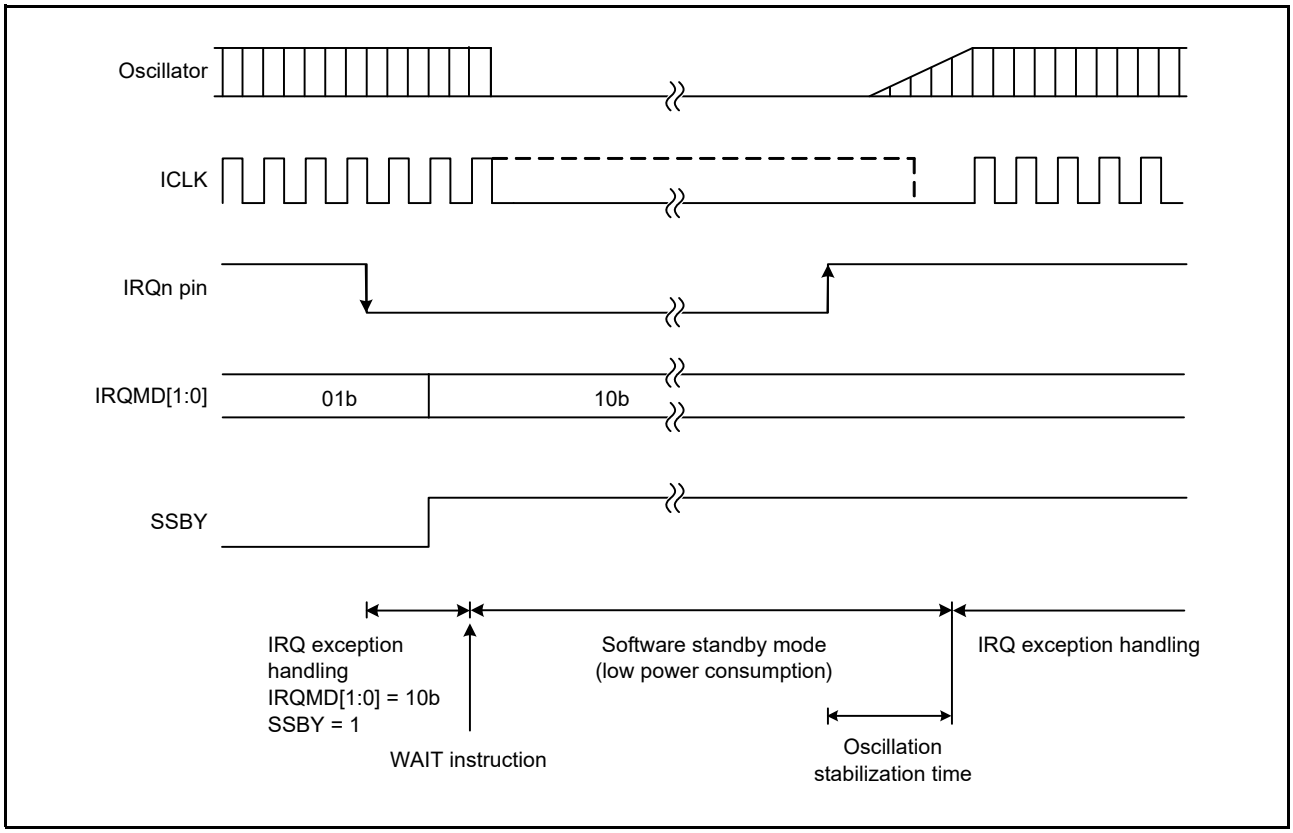

Figure 11.5 Example of Software Standby Mode Application

11.7 Usage Notes

11.7.1 I/O Port States

I/O port states are retained in software standby mode.

11.7.2 Module Stop State of DMAC and DTC

Before setting the MSTPCRA.MSTPA28 bit to 1, set the DMAST.DMST bit of the DMAC and the DTCST.DTCST bit of the DTC to 0 to avoid activating the DMAC and DTC.
For details, refer to section 17, DMA Controller (DMACA) and section 18, Data Transfer Controller (DTCa).

11.7.3 On-Chip Peripheral Module Interrupts

Interrupts do not operate in the module stop state. Therefore, if the module stop state is made after an interrupt request is generated, a CPU interrupt source or a DTC startup source cannot be cleared. For this reason, disable interrupts before entering the module stop state.

11.7.4 Write Access to MSTPCRA, MSTPCRB, and MSTPCRC

Write accesses to MSTPCRA, MSTPCRB, and MSTPCRC should be made only by the CPU.

11.7.5 Timing of WAIT Instructions

The WAIT instruction is executed before completion of the preceding register write. The WAIT instruction being executed before the register setting is modified may cause unintended operation. To avoid this, always execute the WAIT instruction after confirming that the last register setting is done.

11.7.6 Rewrite the Register by DMAC and DTC in Sleep Mode

Depending on the settings of the OFS0.IWDTSLCSTP bit and IWDTCSTPR.SLCSTP bit, the IWDT may also stop in sleep mode. To avoid this, do not set up the DMAC and DTC to rewrite any registers related to the IWDT in sleep mode.

12. Register Write Protection Function

The register write protection function protects important registers from being overwritten for in case a program runs out of control. The registers to be protected are set with the protect register (PRCR).

Table 12.1 lists the association between the PRCR bits and the registers to be protected.

Table 12.1 Association between PRCR Bits and Registers to be Protected

PRCR Bit	Register to be Protected
PRC0	• Registers related to the clock generation circuit: SCKCR, SCKCR3, PLLCR, PLLCR2, MOSCCR, LOCOCR, ILOCOCR, HOCOCR, OSTDCR, OSTDSR, CKOCR, LOCOTRR, ILOCOTRR, HOCOTRR0
PRC1	• Registers related to the operating modes: SYSCR1 • Registers related to low power consumption functions: SBYCR, MSTPCRA, MSTPCRB, MSTPCRC, OPCCR • Registers related to the clock generation circuit: MOFCR, MOSCWTCR • Software reset register: SWRR
PRC2	• Registers related to the low power timer: LPTCR1, LPTCR2, LPTCR3, LPTPRD, LPCMR0, LPWUCR
PRC3	• Registers related to the LVD: LVCMPCR, LVDLVLR, LVD1CR0, LVD1CR1, LVD1SR, LVD2CR0, LVD2CR1, LVD2SR

12.1 Register Descriptions

12.1.1 Protect Register (PRCR)

Address(es): 0008 03FEh

	b15	b14	b13	b12	b11	b10	b9	b8	b7	b6	b5	b4	b3	b2	b1	b0
	PRKEY[7:0]								—	—	—	—	PRC3	PRC2	PRC1	PRC0
Value after reset:	0	0	0	0	0	0	0	0	0	0	0	0	0	0	0	0

Bit	Symbol	Bit Name	Description	R/W
b0	PRC0	Protect Bit 0	Enables writing to the registers related to the clock generation circuit. 0: Write disabled 1: Write enabled	R/W
b1	PRC1	Protect Bit 1	Enables writing to the registers related to operating modes, low power consumption functions, the clock generation circuit, and software reset. 0: Write disabled 1: Write enabled	R/W
b2	PRC2	Protect Bit 2	Enables writing to the registers related to the low power timer. 0: Write disabled 1: Write enabled	R/W
b3	PRC3	Protect Bit 3	Enables writing to the registers related to the LVD. 0: Write disabled 1: Write enabled	R/W
b7 to b4	—	Reserved	These bits are read as 0. The write value should be 0.	R/W
b15 to b8	PRKEY[7:0]	PRC Key Code	These bits control permission and prohibition of writing to the PRCR register. To modify the PRCR register, write A5h to the 8 higher-order bits and the desired value to the 8 lower-order bits as a 16-bit unit.	R/W*1

Note 1. Write data is not retained.

PRCi Bits (Protect Bit i) (i = 0 to 3)

These bits enable or disable writing to the corresponding registers to be protected.

Setting the PRCi bits to 1 and 0 enable and disable writing to the corresponding registers to be protected, respectively.

13. Exception Handling

13.1 Exception Events

During execution of a program by the CPU, the occurrence of a certain event may cause execution of that program to be suspended and execution of another program to be started. Such kinds of events are called exception events.
The RXv2 CPU supports eight types of exceptions. The types of exception events are shown in Figure 13.1.
The occurrence of an exception causes the processor mode to shift to supervisor mode.

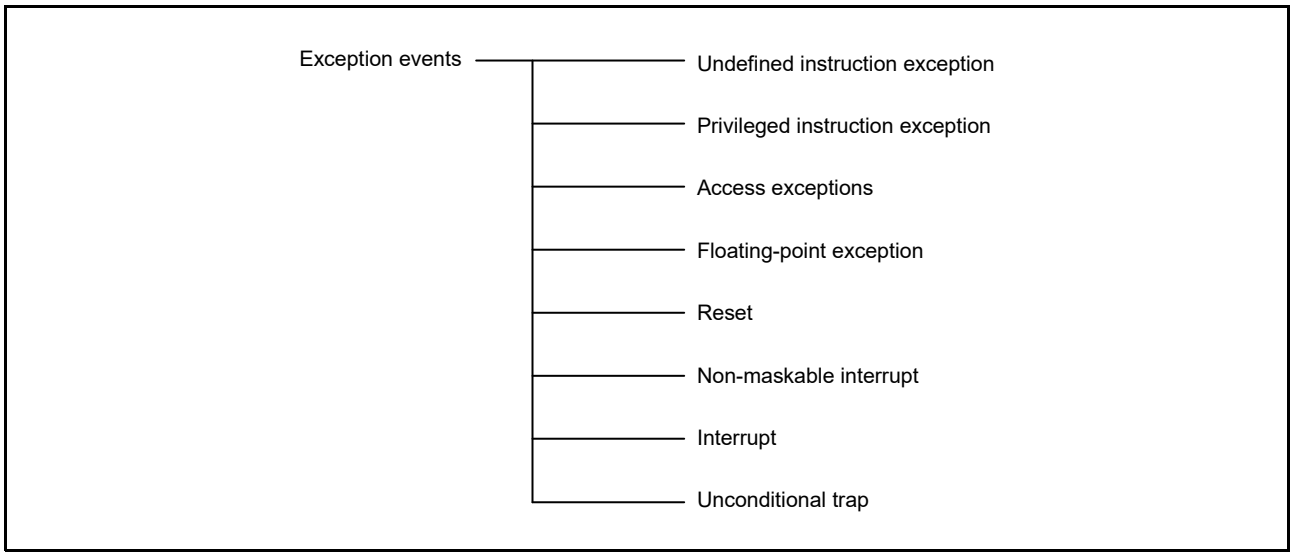

Figure 13.1 Types of Exception Events

13.1.1 Undefined Instruction Exception

An undefined instruction exception occurs when execution of an undefined instruction (an instruction not implemented) is detected.

13.1.2 Privileged Instruction Exception

A privileged instruction exception occurs when execution of a privileged instruction is detected in user mode. Privileged instructions can be executed only in supervisor mode.

13.1.3 Access Exceptions

An access exception occurs when an error is detected in access to memory by the CPU. If the memory-protection unit detects an instruction memory-protection error, an instruction-access exception occurs, and if the unit detects a data memory protection error, an operand-access exception occurs.

13.1.4 Floating-Point Exception

Floating-point exceptions include the five exception events (overflow, underflow, inexact, division-by-zero, and invalid operation) specified in the IEEE754 standard and another floating-point exception that is generated on detection of unimplemented processing. The exception handling of floating-point exceptions is prohibited when the EX, EU, EZ, EO, or EV bit in FPSW is 0.

13.1.5 Reset

A reset is generated by input of a reset signal to the CPU. This has the highest priority of any exception and is always accepted.

13.1.6 Non-Maskable Interrupt

The non-maskable interrupt is generated by input of a non-maskable interrupt signal to the CPU and is only used when a fatal fault is considered to have occurred in the system. Never use the non-maskable interrupt with an attempt to return to the program that was being executed at the time of interrupt generation after the exception handling routine is ended.

13.1.7 Interrupt

Interrupts are generated by the input of interrupt signals to the CPU. A fast interrupt can be selected as the interrupt with the highest priority. In the case of the fast interrupt, hardware pre-processing and hardware post-processing are handled fast. The priority level of the fast interrupt is 15 (the highest). The exception handling of interrupts is masked when the I bit in PSW is 0.

13.1.8 Unconditional Trap

An unconditional trap is generated when the INT or BRK instruction is executed.

13.2 Exception Handling Procedure

In the exception handling, part of the processing is handled automatically by hardware and part of it is handled by a program (exception handling routine) that has been written by the user. Figure 13.2 shows the processing procedure when an exception other than a reset is accepted.

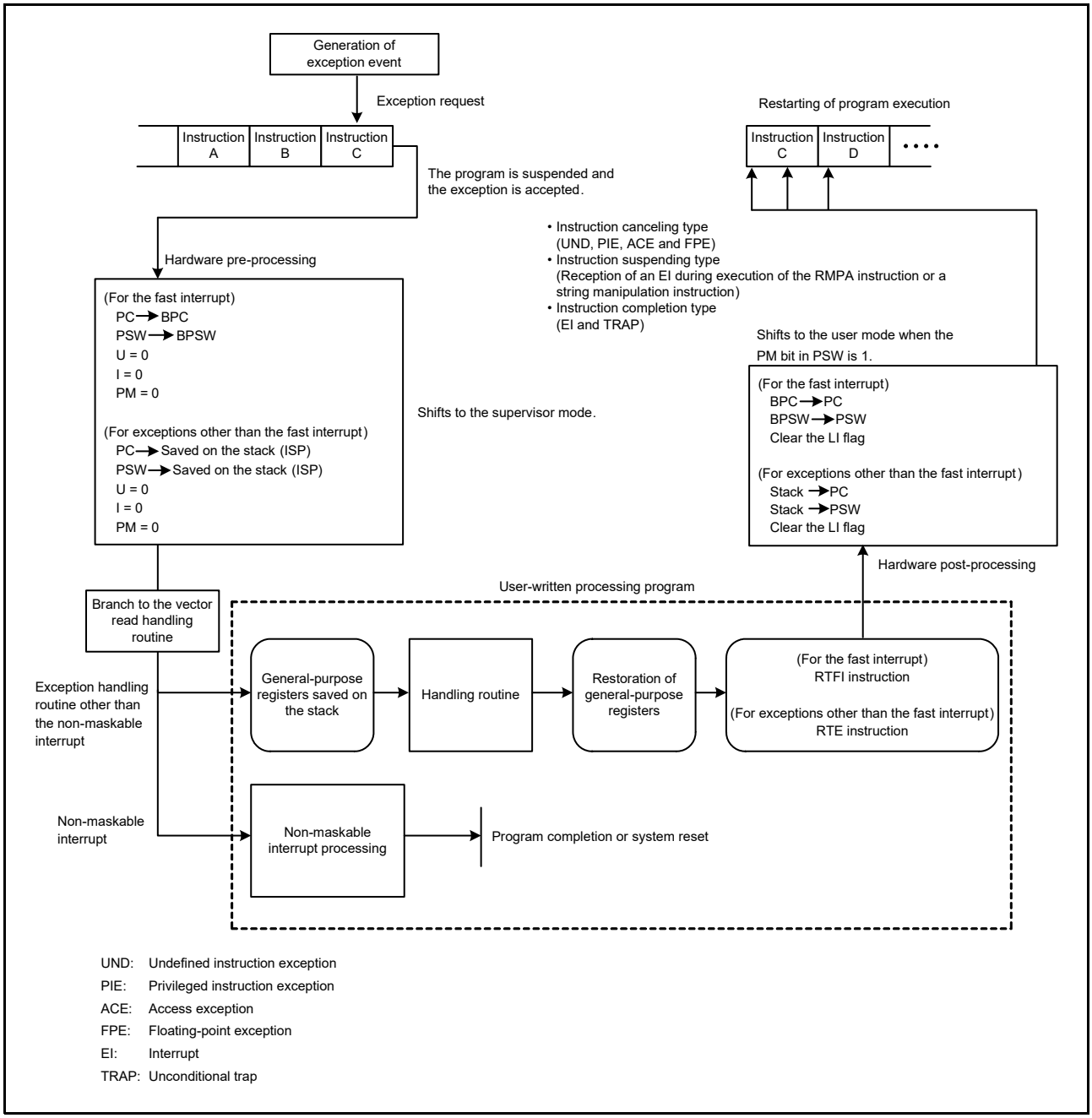

Figure 13.2 Outline of Exception Handling Procedure

When an exception is accepted, hardware processing by the RXv2 CPU is followed by access to the vector to acquire the address of the branch destination. In the vector, a vector address is allocated to each exception, and the branch destination address of the exception handling routine is written to each vector address.
Hardware pre-processing by the RXv2 CPU handles saving of the contents of the program counter (PC) and processor status word (PSW). In the case of a fast interrupt, the contents are saved in the backup PC (BPC) and the backup PSW (BPSW), respectively. In the case of exceptions other than a fast interrupt, the contents are saved in the stack area.
General purpose registers and control registers other than the PC and PSW that are to be used within the exception handling routine must be saved on the stack by a user program at the start of the exception handling routine.
On completion of processing by an exception handling routine, registers saved on the stack are restored and the RTE instruction is executed to restore execution from the exception handling routine to the original program. For return from a fast interrupt, the RTFI instruction is used instead. In the case of a non-maskable interrupt, however, finish the program or reset the system without returning to the original program.
Hardware post-processing by the RXv2 CPU handles restoration of the contents of PC and PSW. In the case of a fast interrupt, the values of BPC and BPSW are restored to PC and PSW, respectively. In the case of exceptions other than a fast interrupt, the values are restored from the stack to PC and PSW.

13.3 Acceptance of Exception Events

When an exception occurs, the CPU suspends the execution of the program and processing branches to the exception handling routine.

13.3.1 Acceptance Timing and Saved PC Value

Table 13.1 lists the timing of acceptance and the program counter (PC) value to be saved for each exception event.

Table 13.1 Acceptance Timing and Saved PC Value

Exception Event		Type of Handling	Acceptance Timing	Value Saved in BPC or on the Stack
Undefined instruction exception		Instruction canceling type	During instruction execution	PC value of the instruction that generated the exception
Privileged instruction exception		Instruction canceling type	During instruction execution	PC value of the instruction that generated the exception
Access exception		Instruction canceling type	During instruction execution	PC value of the instruction that generated the exception
Floating-point exception		Instruction canceling type	During instruction execution	PC value of the instruction that generated the exception
Reset		Instruction abandonment type	Any machine cycle	None
Non-maskable interrupt	During execution of the RMPA, SCMPU, SMOVB, SMOVF, SMOVU, SSTR, SUNTIL, and SWHILE instructions	Instruction suspending type	During instruction execution	PC value of the instruction being executed
	Other than above	Instruction completion type	At the next break between instructions	PC value of the next instruction
Interrupt	During execution of the RMPA, SCMPU, SMOVB, SMOVF, SMOVU, SSTR, SUNTIL, and SWHILE instructions	Instruction suspending type	During instruction execution	PC value of the instruction being executed
	Other than above	Instruction completion type	At the next break between instructions	PC value of the next instruction
Unconditional trap		Instruction completion type	At the next break between instructions	PC value of the next instruction

13.3.2 Vector and Site for Saving the Values in the PC and PSW

The vector for each type of exception and the site for saving the values of the program counter (PC) and processor status word (PSW) are listed in Table 13.2. The addresses where the exception vector table and interrupt vector table start must be set. For details, see section 2.6, Vector Table.

Table 13.2 Vector and Site for Saving the Values in the PC and PSW

Exception		Vector	Site for Saving the Values in the PC and PSW
Undefined instruction exception		Exception vector table (EXTB)	Stack
Privileged instruction exception		Exception vector table (EXTB)	Stack
Access exception		Exception vector table (EXTB)	Stack
Floating-point exception		Exception vector table (EXTB)	Stack
Reset		Exception vector table (EXTB)	Nowhere
Non-maskable interrupt		Exception vector table (EXTB)	Stack
Interrupt	Fast interrupt	FINTV	BPC and BPSW
	Other than above	Interrupt vector table (INTB)	Stack
Unconditional trap		Interrupt vector table (INTB)	Stack

13.4 Hardware Processing for Accepting and Returning from Exceptions

This section describes the hardware processing for accepting and returning from exceptions other than a reset.

(1) Hardware Pre-Processing for Accepting an Exception

(a) Saving PSW

- For a fast interrupt
  PSW → BPSW
- For exceptions other than a fast interrupt
  PSW → Stack

Note: The values in FPSW are not saved by hardware pre-processing. Therefore, if floating-point instructions are to be used within an exception handling routine, the user must save these values on the stack within the exception handling routine.

(b) Updating PM, U, and I Bits in PSW

I: Set to 0
U: Set to 0
PM: Set to 0

(c) Saving PC

- For a fast interrupt
  PC → BPC
- For exceptions other than a fast interrupt
  PC → Stack

(d) Setting Branch Destination Address of Exception Handling Routine in PC

Processing is shifted to the exception handling routine by acquiring the vector corresponding to the exception and then branching accordingly.

(2) Hardware Post-Processing for Execution of RTE and RTFI Instructions

(a) Restoring PSW

- For a fast interrupt
  BPSW → PSW
- For exceptions other than a fast interrupt
  Stack → PSW

(b) Restoring PC

- For a fast interrupt
  BPC → PC
- For exceptions other than a fast interrupt
  Stack → PC

(c) Clearing the LI flag

13.5 Hardware Pre-Processing

The hardware pre-processing from reception of each exception request to execution of the associated exception handling routine are explained below.

13.5.1 Undefined Instruction Exception

1. The value of the processor status word (PSW) is saved on the stack (ISP).
2. The processor mode select bit (PM), the stack pointer select bit (U), and the interrupt enable bit (I) in PSW are cleared to 0.
3. The value of the program counter (PC) is saved on the stack (ISP).
4. The vector is fetched from the value of EXTB + address 0000 005Ch.
5. The fetched vector is set to the PC and processing branches to the exception handling routine.

13.5.2 Privileged Instruction Exception

1. The value in the processor status word (PSW) is saved on the stack (ISP).
2. The processor mode select bit (PM), the stack pointer select bit (U), and the interrupt enable bit (I) in PSW are cleared to 0.
3. The value of the program counter (PC) is saved on the stack (ISP).
4. The vector is fetched from the value of EXTB + address 0000 0050h.
5. The fetched vector is set to the PC and processing branches to the exception handling routine.

13.5.3 Access Exceptions

1. The value in the processor status word (PSW) is saved on the stack (ISP).
2. The processor mode select bit (PM), the stack pointer select bit (U), and the interrupt enable bit (I) in PSW are cleared to 0.
3. The value of the program counter (PC) is saved on the stack (ISP).
4. The vector is fetched from the value of EXTB + address 0000 0054h.
5. The fetched vector is set to the PC and processing branches to the exception handling routine.

13.5.4 Floating-Point Exception

1. The value in the processor status word (PSW) is saved on the stack (ISP).
2. The processor mode select bit (PM), the stack pointer select bit (U), and the interrupt enable bit (I) in PSW are cleared to 0.
3. The value of the program counter (PC) is saved on the stack (ISP).
4. The vector is fetched from the value of EXTB + address 0000 0064h.
5. The fetched vector is set to the PC and processing branches to the exception handling routine.

13.5.5 Reset

1. The control registers are initialized.
2. The vector is fetched from address FFFF FFFCh.
3. The fetched vector is set to the PC.

13.5.6 Non-Maskable Interrupt

1. The value of the processor status word (PSW) is saved on the stack (ISP).
2. The processor mode select bit (PM), the stack pointer select bit (U), and the interrupt enable bit (I) in PSW are cleared to 0.
3. If the interrupt was generated during the execution of an RMPA, SCMPU, SMOVB, SMOVF, SMOVU, SSTR, SUNTIL, or SWHILE instruction, the value of the program counter (PC) for that instruction is saved on the stack (ISP). For other instructions, the PC value of the next instruction is saved.
4. The processor interrupt priority level bits (IPL[3:0]) in PSW are set to Fh.
5. The vector is fetched from the value of EXTB + address 0000 0078h.
6. The fetched vector is set to the PC and processing branches to the exception handling routine.

13.5.7 Interrupt

1. The value of the processor status word (PSW) is saved on the stack (ISP) or, for the fast interrupt, in the backup PSW (BPSW).
2. The processor mode select bit (PM), the stack pointer select bit (U), and the interrupt enable bit (I) in PSW are cleared to 0.
3. If the interrupt was generated during the execution of an RMPA, SCMPU, SMOVB, SMOVF, SMOVU, SSTR, SUNTIL, or SWHILE instruction, the value of the program counter (PC) for that instruction is saved. For other instructions, the PC value of the next instruction is saved. Saving of the PC is in the backup PC (BPC) for fast interrupts.
4. The processor interrupt priority level bits (IPL[3:0]) in PSW indicate the interrupt priority level of the interrupt.
5. The vector for an interrupt source other than the fast interrupt is fetched from the interrupt vector table. For the fast interrupt, the address is fetched from the fast interrupt vector register (FINTV).
6. The fetched vector is set to the PC and processing branches to the exception handling routine.

13.5.8 Unconditional Trap

1. The value in the processor status word (PSW) is saved on the stack (ISP).
2. The processor mode select bit (PM), the stack pointer select bit (U), and the interrupt enable bit (I) in PSW are cleared to 0.
3. The value of the program counter (PC) for the next instruction is saved on the stack (ISP).
4. For the INT instruction, the value at the vector corresponding to the INT instruction number is fetched from the interrupt vector table.
   For the BRK instruction, the value at the vector from the start address is fetched from the interrupt vector table.
5. The fetched vector is set to the PC and processing branches to the exception handling routine.

13.6 Return from Exception Handling Routine

Executing the instruction listed in Table 13.3 at the end of the corresponding exception handling routine restores the values of the program counter (PC) and processor status word (PSW) that were saved on the stack or in the control registers (BPC and BPSW) immediately before the exception handling sequence.

Table 13.3 Return from Exception Handling Routine

Exception		Instruction for Return
Undefined instruction exception		RTE
Privileged instruction exception		RTE
Access exception		RTE
Floating-point exception		RTE
Reset		Return is impossible
Non-maskable interrupt		Prohibited
Interrupt	Fast interrupt	RTFI
	Other than above	RTE
Unconditional trap		RTE

13.7 Priority of Exception Events

The priority of exception events is listed in Table 13.4. When multiple exceptions are generated at the same time, the exception with the highest priority is accepted first.

Table 13.4 Priority of Exception Events

Priority		Exception Event
High	1	Reset
↑	2	Non-maskable interrupt
	3	Interrupt
	4	Instruction access exception
	5	Undefined instruction exception Privileged instruction exception
	6	Unconditional trap
	7	Operand access exception
Low	8	Floating-point exception

14. Interrupt Controller (ICUb)

14.1 Overview

The interrupt controller receives interrupt requests from peripheral modules and external pins, and generates an interrupt request to the CPU and a transfer request to the DTC and DMAC.

Table 14.1 lists the specifications of the interrupt controller, and Figure 14.1 shows a block diagram of the interrupt controller.

Table 14.1 Specifications of Interrupt Controller

Item		Description
Interrupts	Peripheral function interrupts	• Interrupts from peripheral modules • Interrupt detection: Edge detection/level detection Edge detection or level detection is fixed for each source of connected peripheral modules.
	External pin interrupts	• Interrupts from pins IRQ0 to IRQ7 • Number of sources: 8 • Interrupt detection: Low level/falling edge/rising edge/rising and falling edges One of these detection methods can be set for each source. • Digital filter function: Supported
	Software interrupt	• Interrupt generated by writing to a register • One interrupt source
	Event link interrupt	The ELSR8I, ELSR18I, or ELSR19I interrupt is generated by an ELC event
	Interrupt priority	Specified by registers.
	Fast interrupt function	Faster interrupt processing of the CPU can be set only for a single interrupt source.
	DTC/DMAC control	Interrupt sources can be used to start the DTC and DMAC.*1
Non-maskable interrupts	NMI pin interrupt	• Interrupt from the NMI pin • Interrupt detection: Falling edge/rising edge • Digital filter function: Supported
	Oscillation stop detection interrupt	Interrupt on detection of oscillation having stopped
	IWDT underflow/ refresh error	Interrupt on an underflow of the down counter or occurrence of a refresh error
	Voltage monitoring 1 interrupt	Voltage monitoring interrupt of voltage monitoring circuit 1 (LVD1)
	Voltage monitoring 2 interrupt	Voltage monitoring interrupt of voltage monitoring circuit 2 (LVD2)
Return from low power consumption states	Sleep mode Deep sleep mode	Return is initiated by any non-maskable interrupt or any interrupt.
	Software standby mode	Return is initiated by the non-maskable interrupt, external pin interrupts (IRQ0 to IRQ7), peripheral interrupts (voltage monitoring 1, voltage monitoring 2), or ELSR8I interrupt (LPT dedicated interrupt).

Note 1. For the DTC and DMAC triggers, refer to Table 14.3, Interrupt Vector Table.

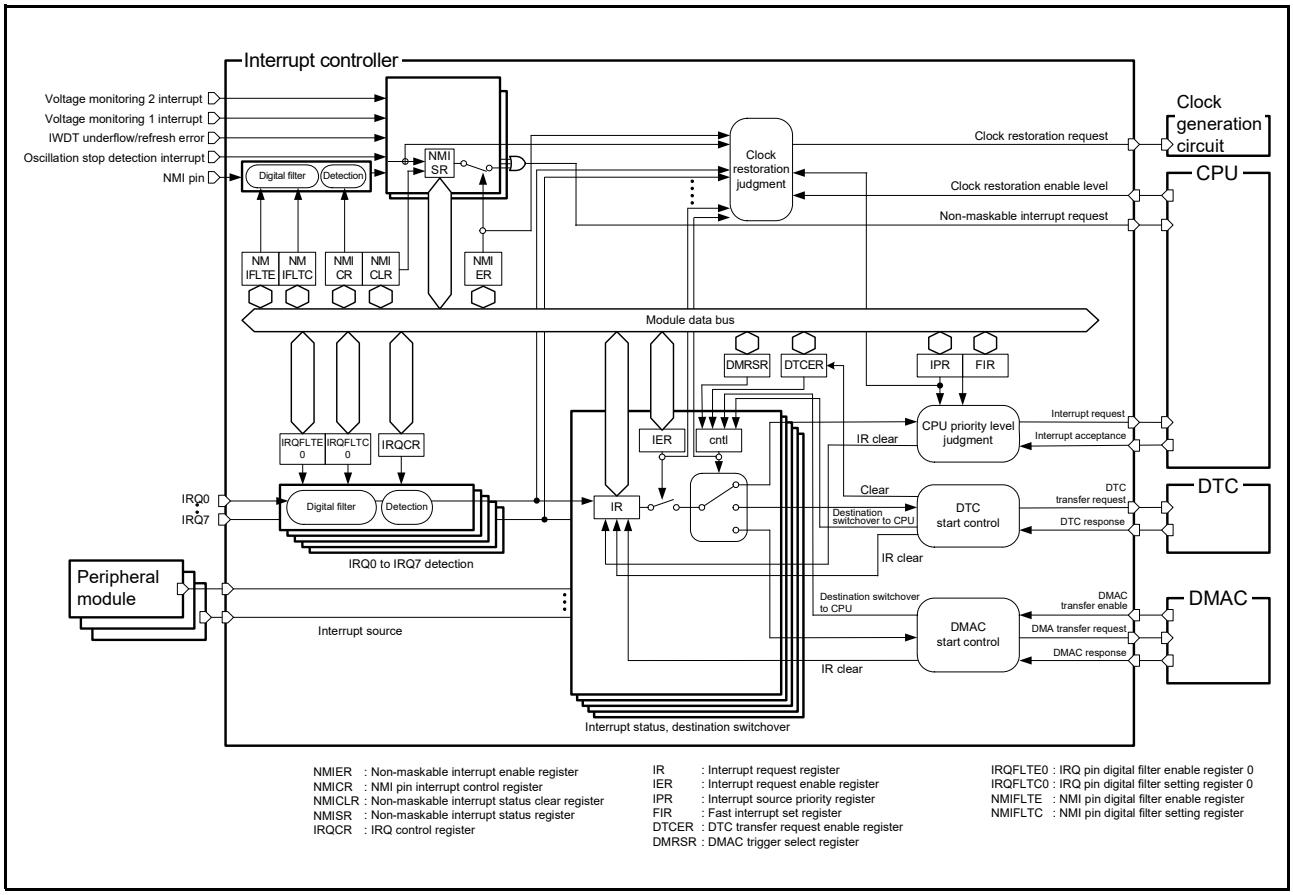

Figure 14.1 Block Diagram of Interrupt Controller

Table 14.2 lists the input/output pins of the interrupt controller.

Table 14.2 Pin Configuration of Interrupt Controller

Pin Name	I/O	Description
NMI	Input	Non-maskable interrupt request pin
IRQ0 to IRQ7	Input	External interrupt request pins

14.2 Register Descriptions

14.2.1 Interrupt Request Register n (IRn) (n = interrupt vector number)

Address(es): ICU.IR016 0008 7010h to ICU.IR255 0008 70FFh

	b7	b6	b5	b4	b3	b2	b1	b0
	—	—	—	—	—	—	—	IR
Value after reset:	0	0	0	0	0	0	0	0

Bit	Symbol	Bit Name	Description	R/W
b0	IR	Interrupt Status Flag	0: No interrupt request is generated 1: An interrupt request is generated	R/(W) *1
b7 to b1	—	Reserved	These bits are read as 0. The write value should be 0.	R/W

Note 1. For an edge detection interrupt, only 0 can be written to this bit; do not write 1.
For a level detection interrupt, neither 0 nor 1 can be written.

IRn is provided for each interrupt source, where “n” indicates the interrupt vector number.
For the correspondence between interrupt sources and interrupt vector numbers, see Table 14.3, Interrupt Vector Table.

IR Flag (Interrupt Status Flag)

This flag is the status flag of an individual interrupt request. This flag is set to 1 when the corresponding interrupt request is generated. To detect an interrupt request, the interrupt request output should be enabled by the corresponding peripheral module interrupt enable bit.
There are two interrupt request detection methods: edge detection and level detection. For interrupts from peripheral modules, either edge detection or level detection is determined per interrupt source. For interrupts from IRQi (i = 0 to 7) pins, edge detection or level detection is selected by setting the corresponding IRQCRi.IRQMD[1:0] bits. For detection of the various interrupt sources, see Table 14.3, Interrupt Vector Table.

(1) Edge detection

[Setting condition]

- The flag is set to 1 in response to the generation of an interrupt request from the corresponding peripheral module or IRQi pin. For interrupt generation by the various peripheral modules, refer to the sections describing the modules.

[Clearing conditions]

- The flag is cleared to 0 when the interrupt request destination accepts the interrupt request.
- The IR flag is cleared to 0 by writing 0 to it. Note, however, that writing 0 to the IR flag is prohibited if the destination of the interrupt request is the DTC or DMAC.

(2) Level detection

[Setting condition]

- The flag remains set to 1 while an interrupt request is being sent from the corresponding peripheral module or IRQi pin. For interrupt generation by the various peripheral modules, refer to the sections describing the modules.

[Clearing condition]

- The flag is cleared to 0 when the source of the interrupt request is cleared (it is not cleared when the interrupt request destination accepts the interrupt request). For clearing interrupts from the various peripheral modules, refer to the sections describing the modules.

When level detection has been selected for an IRQi pin, the interrupt request is withdrawn by driving the IRQi pin high.
Do not write 0 or 1 to the IR flag while level detection is selected.

14.2.2 Interrupt Request Enable Register m (IERm) (m = 02h to 1Fh)

Address(es): ICU.IER02 0008 7202h to ICU.IER1F 0008 721Fh

	b7	b6	b5	b4	b3	b2	b1	b0
	IEN7	IEN6	IEN5	IEN4	IEN3	IEN2	IEN1	IEN0
Value after reset:	0	0	0	0	0	0	0	0

Bit	Symbol	Bit Name	Description	R/W
b0	IEN0	Interrupt Request Enable 0	0: Interrupt request is disabled 1: Interrupt request is enabled	R/W
b1	IEN1	Interrupt Request Enable 1		R/W
b2	IEN2	Interrupt Request Enable 2		R/W
b3	IEN3	Interrupt Request Enable 3		R/W
b4	IEN4	Interrupt Request Enable 4		R/W
b5	IEN5	Interrupt Request Enable 5		R/W
b6	IEN6	Interrupt Request Enable 6		R/W
b7	IEN7	Interrupt Request Enable 7		R/W

Note: Write 0 to the bit that corresponds to the vector number for reservation. These bits are read as 0.

IENj Bit (Interrupt Request Enable j) (j = 0 to 7)

When an IENj bit is 1, the corresponding interrupt request will be output to the destination selected for the request.
When an IENj bit is 0, the corresponding interrupt request will not be output to the destination selected for the request.
The setting of an IENj bit does not affect the IRn.IR flag (n = interrupt vector number). Even if the corresponding IENj bit is 0, the IR flag value changes according to the descriptions in section 14.2.1, Interrupt Request Register n (IRn) (n = interrupt vector number).
The IERm.IENj bit is set for each request source (vector number).
For the correspondence between interrupt sources and IERm.IENj bits, see Table 14.3, Interrupt Vector Table.
For the procedure for setting IERm.IENj bits during the selection of destinations for interrupt requests, refer to section 14.4.3, Selecting Interrupt Request Destinations.

14.2.3 Interrupt Source Priority Register n (IPRn) (n = interrupt vector number)

Address(es): ICU.IPR000 0008 7300h to ICU.IPR255 0008 73FFh

	b7	b6	b5	b4	b3	b2	b1	b0
	—	—	—	—	IPR[3:0]			
Value after reset:	0	0	0	0	0	0	0	0

Bit	Symbol	Bit Name	Description	R/W
b3 to b0	IPR[3:0]	Interrupt Priority Level Select	b3 b0 0 0 0 0: Level 0 (interrupt disabled)*1 0 0 0 1: Level 1 0 0 1 0: Level 2 0 0 1 1: Level 3 0 1 0 0: Level 4 0 1 0 1: Level 5 0 1 1 0: Level 6 0 1 1 1: Level 7 1 0 0 0: Level 8 1 0 0 1: Level 9 1 0 1 0: Level 10 1 0 1 1: Level 11 1 1 0 0: Level 12 1 1 0 1: Level 13 1 1 1 0: Level 14 1 1 1 1: Level 15 (highest)	R/W
b7 to b4	—	Reserved	These bits are read as 0. The write value should be 0.	R/W

Note 1. When the interrupt is specified as a fast interrupt, it can be issued even if the priority level is level 0.

For the correspondence between interrupt sources and IPRn registers, see Table 14.3, Interrupt Vector Table.

IPR[3:0] Bits (Interrupt Priority Level Select)

These bits specify the priority level of the corresponding interrupt source.
Priority levels specified by the IPR[3:0] bits are used only to determine the priority of interrupt requests to be transferred to the CPU, and do not affect transfer requests to the DTC or DMAC.
The CPU accepts only interrupt requests higher than the priority level specified by the IPL[3:0] bits in PSW, and handles accepted interrupts.
If two or more interrupt requests are generated at the same time, their priority levels are compared with the value of the IPR[3:0] bits. If interrupt requests of the same priority level are generated at the same time, an interrupt source with a smaller vector number takes precedence.
These bits should be written to while an interrupt request is disabled (IERm.IENj bit = 0 (m = 02h to 1Fh; j = 0 to 7)).

14.2.4 Fast Interrupt Set Register (FIR)

Address(es): ICU.FIR 0008 72F0h

	b15	b14	b13	b12	b11	b10	b9	b8	b7	b6	b5	b4	b3	b2	b1	b0
	FIEN	—	—	—	—	—	—	—	FVCT[7:0]							
Value after reset:	0	0	0	0	0	0	0	0	0	0	0	0	0	0	0	0

Bit	Symbol	Bit Name	Description	R/W
b7 to b0	FVCT[7:0]	Fast Interrupt Vector Number	Specify the vector number of an interrupt source to be a fast interrupt.	R/W
b14 to b8	—	Reserved	These bits are read as 0. The write value should be 0.	R/W
b15	FIEN	Fast Interrupt Enable	0: Fast interrupt is disabled 1: Fast interrupt is enabled	R/W

The fast interrupt function based on the FIR register setting is applicable only to interrupts to the CPU. It will not affect any transfer request to the DTC or DMAC.
Before writing to this register, be sure to disable interrupt requests (IERm.IENj bit = 0 (m = 02h to 1Fh; j = 0 to 7)).

FVCT[7:0] Bits (Fast Interrupt Vector Number)

The FVCT[7:0] bits specify the vector number of an interrupt source that uses the fast interrupt function.

FIEN Bit (Fast Interrupt Enable)

This bit enables the fast interrupt.
Setting this bit to 1 makes the interrupt request of the vector number specified by the FVCT[7:0] bits a fast interrupt.
When an interrupt request of the vector number specified by the FVCT[7:0] bits is generated and the interrupt request destination is the CPU while the FIEN bit is 1, the interrupt request is output to the CPU as a fast interrupt regardless of the setting of the IPRn register (n = interrupt vector number). When using the fast interrupt for returning from the software standby mode, see section 14.6.2, Return from Software Standby Mode.
If the setting of the IERm.IENj bit has disabled interrupt requests from the interrupt source with the vector number in this register, fast interrupt requests are not output to the CPU.
For settable vector numbers, see Table 14.3, Interrupt Vector Table.
Do not write any reserved vector numbers to the FVCT[7:0] bits.

For details on the fast interrupt, see section 13, Exception Handling, and section 14.4.6, Fast Interrupt.

14.2.5 Software Interrupt Generation Register (SWINTR)

Address(es): ICU.SWINTR 0008 72E0h

	b7	b6	b5	b4	b3	b2	b1	b0
	—	—	—	—	—	—	—	SWINT
Value after reset:	0	0	0	0	0	0	0	0

Bit	Symbol	Bit Name	Description	R/W
b0	SWINT	Software Interrupt Generation	This bit is read as 0. Writing 1 issues a software interrupt request. Writing 0 to this bit has no effect.	R/(W) *1
b7 to b1	—	Reserved	These bits are read as 0. The write value should be 0.	R/W

Note 1. Only 1 can be written.

SWINT Bit (Software Interrupt Generation)

When 1 is written to the SWINT bit, the interrupt request register 027 (IR027) is set to 1.
If 1 is written to the SWINT bit when the DTC transfer request enable register 027 (DTCER027) is set to 0, an interrupt to the CPU is generated.
If 1 is written to the SWINT bit when the DTC transfer request enable register 027 (DTCER027) is set to 1, a DTC transfer request is issued.

14.2.6 DTC Transfer Request Enable Register n (DTCERn) (n = interrupt vector number)

Address(es): ICU.DTCER027 0008 711Bh to ICU.DTCER255 0008 71FFh

	b7	b6	b5	b4	b3	b2	b1	b0
	—	—	—	—	—	—	—	DTCE
Value after reset:	0	0	0	0	0	0	0	0

Bit	Symbol	Bit Name	Description	R/W
b0	DTCE	DTC Transfer Request Enable	0: The corresponding interrupt source is not selected as the DTC trigger. 1: The corresponding interrupt source is selected as the DTC trigger.	R/W
b7 to b1	—	Reserved	These bits are read as 0. The write value should be 0.	R/W

An interrupt source that has been selected as a DMAC trigger should not be specified as a DTC trigger. See Table 14.3, Interrupt Vector Table, for the interrupt sources that are selectable as the DTC trigger.

DTCE Bit (DTC Transfer Request Enable)

When the DTCE bit is set to 1, the corresponding interrupt source is selected as the DTC trigger.

[Setting condition]

- When 1 is written to the DTCE bit

[Clearing conditions]

- When the specified number of transfers is completed (for the chain transfer, the number of transfers for the last chain transfer is completed)
- When 0 is written to the DTCE bit

14.2.7 DMAC Trigger Select Register m (DMRSRm) (m = DMAC channel number)

Address(es): ICU.DMRSR0 0008 7400h, ICU.DMRSR1 0008 7404h, ICU.DMRSR2 0008 7408h, ICU.DMRSR3 0008 740Ch

	b7	b6	b5	b4	b3	b2	b1	b0
	DMRS[7:0]							
Value after reset:	0	0	0	0	0	0	0	0

Bit	Symbol	Bit Name	Description	R/W
b7 to b0	DMRS[7:0]	DMAC Trigger Select	These bits specify the vector number for the DMA transfer request.	R/W

To specify the same interrupt source for multiple DMRSRm registers is disabled. The interrupt source that has been selected for the DMRSRm trigger should not be specified as the DTC trigger. Otherwise, the correct operation is not guaranteed.

DMRS[7:0] Bits (DMAC Trigger Select)

The vector number of the interrupt source used as the DMAC trigger is specified in 8 bits. Do not set the vector numbers that are not assigned for the DMAC trigger.

For the correspondence between interrupt sources and interrupt vector numbers, see Table 14.3, Interrupt Vector Table.

Write to the DMRSRm register while the DMA transfer enable bit of the DMA transfer enable register (DMACm.DMCNT.DTE) is cleared to 0.

14.2.8 IRQ Control Register i (IRQCRi) (i = 0 to 7)

Address(es): ICU.IRQCR0 0008 7500h to ICU.IRQCR7 0008 7507h

	b7	b6	b5	b4	b3	b2	b1	b0
	—	—	—	—	IRQMD[1:0]		—	—
Value after reset:	0	0	0	0	0	0	0	0

Bit	Symbol	Bit Name	Description	R/W
b1, b0	—	Reserved	These bits are read as 0. The write value should be 0.	R/W
b3, b2	IRQMD[1:0]	IRQ Detection Sense Select	b3 b2 0 0: Low level 0 1: Falling edge 1 0: Rising edge 1 1: Rising and falling edges	R/W
b7 to b4	—	Reserved	These bits are read as 0. The write value should be 0.	R/W

Only change the settings of this register while the corresponding interrupt request enable bit is prohibiting the interrupt request (IENj bit in IERm (m = 02h to 1Fh; j = 0 to 7) is 0). After changing the setting, clear the IR flag in IRn before setting the interrupt enable bit. However, when the change is to the low level, the IR flag does not require clearing.

IRQMD[1:0] Bits (IRQ Detection Sense Select)

These bits select the interrupt detection sensing method of IRQi pin.
For the external pin interrupt detection setting, see section 14.4.8, External Pin Interrupts.

14.2.9 IRQ Pin Digital Filter Enable Register 0 (IRQFLTE0)

Address(es): ICU.IRQFLTE0 0008 7510h

	b7	b6	b5	b4	b3	b2	b1	b0
	FLTEN 7	FLTEN 6	FLTEN 5	FLTEN 4	FLTEN 3	FLTEN 2	FLTEN 1	FLTEN 0
Value after reset:	0	0	0	0	0	0	0	0

Bit	Symbol	Bit Name	Description	R/W
b0	FLTEN0	IRQ0 Digital Filter Enable	0: Digital filter is disabled 1: Digital filter is enabled	R/W
b1	FLTEN1	IRQ1 Digital Filter Enable		R/W
b2	FLTEN2	IRQ2 Digital Filter Enable		R/W
b3	FLTEN3	IRQ3 Digital Filter Enable		R/W
b4	FLTEN4	IRQ4 Digital Filter Enable		R/W
b5	FLTEN5	IRQ5 Digital Filter Enable		R/W
b6	FLTEN6	IRQ6 Digital Filter Enable		R/W
b7	FLTEN7	IRQ7 Digital Filter Enable		R/W

FLTENi Bit (IRQi Digital Filter Enable) (i = 0 to 7)

This bit enables the digital filter used for the IRQi pin.

The digital filter is enabled when the FLTENi bit is 1, and disabled when the FLTENi bit is 0.

The IRQi pin level is sampled at the sampling clock cycle specified with the IRQFLTC0.FCLKSELi[1:0] bits. When the sampled level matches three times, the output level from the digital filter changes.

For details of the digital filter, see section 14.4.7, Digital Filter.

14.2.10 IRQ Pin Digital Filter Setting Register 0 (IRQFLTC0)

Address(es): ICU.IRQFLTC0 0008 7514h

	b15	b14	b13	b12	b11	b10	b9	b8	b7	b6	b5	b4	b3	b2	b1	b0
	FCLKSEL7[1:0]		FCLKSEL6[1:0]		FCLKSEL5[1:0]		FCLKSEL4[1:0]		FCLKSEL3[1:0]		FCLKSEL2[1:0]		FCLKSEL1[1:0]		FCLKSEL0[1:0]	
Value after reset:	0	0	0	0	0	0	0	0	0	0	0	0	0	0	0	0

Bit	Symbol	Bit Name	Description	R/W
b1, b0	FCLKSEL0[1:0]	IRQ0 Digital Filter Sampling Clock	0 0: PCLK 0 1: PCLK/8 1 0: PCLK/32 1 1: PCLK/64	R/W
b3, b2	FCLKSEL1[1:0]	IRQ1 Digital Filter Sampling Clock		R/W
b5, b4	FCLKSEL2[1:0]	IRQ2 Digital Filter Sampling Clock		R/W
b7, b6	FCLKSEL3[1:0]	IRQ3 Digital Filter Sampling Clock		R/W
b9, b8	FCLKSEL4[1:0]	IRQ4 Digital Filter Sampling Clock		R/W
b11, b10	FCLKSEL5[1:0]	IRQ5 Digital Filter Sampling Clock		R/W
b13, b12	FCLKSEL6[1:0]	IRQ6 Digital Filter Sampling Clock		R/W
b15, b14	FCLKSEL7[1:0]	IRQ7 Digital Filter Sampling Clock		R/W

FCLKSELi[1:0] Bits (IRQi Digital Filter Sampling Clock) (i = 0 to 7)

These bits select the cycle of the digital filter sampling clock for the IRQi pin.

The sampling clock cycle can be selected from among the PCLK (every cycle), PCLK/8 (once every eight cycles), PCLK/32 (once every 32 cycles), and PCLK/64 (once every 64 cycles).

For details of the digital filter, see section 14.4.7, Digital Filter.

14.2.11 Non-Maskable Interrupt Status Register (NMISR)

Address(es): ICU.NMISR 0008 7580h

	b7	b6	b5	b4	b3	b2	b1	b0
	—	—	LVD2ST	LVD1ST	IWDTST	—	OSTST	NMIST
Value after reset:	0	0	0	0	0	0	0	0

Bit	Symbol	Bit Name	Description	R/W
b0	NMIST	NMI Status Flag	0: NMI pin interrupt is not requested 1: NMI pin interrupt is requested	R
b1	OSTST	Oscillation Stop Detection Interrupt Status Flag	0: Oscillation stop detection interrupt is not requested 1: Oscillation stop detection interrupt is requested	R
b2	—	Reserved	This bit is read as 0. Writing to this bit has no effect.	R
b3	IWDTST	IWDT Underflow/Refresh Error Status Flag	0: IWDT underflow/refresh error interrupt is not requested 1: IWDT underflow/refresh error interrupt is requested	R
b4	LVD1ST	Voltage Monitoring 1 Interrupt Status Flag	0: Voltage monitoring 1 interrupt is not requested 1: Voltage monitoring 1 interrupt is requested	R
b5	LVD2ST	Voltage Monitoring 2 Interrupt Status Flag	0: Voltage monitoring 2 interrupt is not requested 1: Voltage monitoring 2 interrupt is requested	R
b7, b6	—	Reserved	These bits are read as 0. Writing to these bits has no effect.	R

The NMISR register monitors the status of a non-maskable interrupt source. Writing to the NMISR register is ignored. The setting in the non-maskable interrupt enable register (NMIER) does not affect the status flags in NMISR.
Before the end of the non-maskable interrupt handler, read the NMISR register and confirm the generation status of other non-maskable interrupts. Be sure to confirm that all of the bits in the NMISR register are set to 0 before the end of the handler.

NMIST Flag (NMI Status Flag)

This flag indicates the NMI pin interrupt request.
The NMIST flag is read-only, and cleared by the NMICLR.NMICLR bit.
[Setting condition]

- When an edge specified by the NMICR.NMIMD bit is input to the NMI pin

[Clearing condition]

- When 1 is written to the NMICLR.NMICLR bit

OSTST Flag (Oscillation Stop Detection Interrupt Status Flag)

This flag indicates the oscillation stop detection interrupt request.
The OSTST flag is read-only, and cleared by the NMICLR.OSTCLR bit.
[Setting condition]

- When the oscillation stop detection interrupt is generated

[Clearing condition]

- When 1 is written to the NMICLR.OSTCLR bit

IWDTST Flag (IWDT Underflow/Refresh Error Status Flag)

This flag indicates the IWDT underflow/refresh error interrupt request.
The IWDTST flag is read-only, and cleared by the NMICLR.IWDTCLR bit.
[Setting condition]

- When the IWDT underflow/refresh error interrupt is generated while this interrupt is enabled at its source.

[Clearing condition]

- When 1 is written to the NMICLR.IWDTCLR bit

LVD1ST Flag (Voltage Monitoring 1 Interrupt Status Flag)

This flag indicates the request for voltage monitoring 1 interrupt.
The LVD1ST flag is read-only, and cleared by the NMICLR.LVD1CLR bit.

[Setting condition]

- When the voltage monitoring 1 interrupt is generated while this interrupt is enabled at its source.

[Clearing condition]

- When 1 is written to the NMICLR.LVD1CLR bit

LVD2ST Flag (Voltage Monitoring 2 Interrupt Status Flag)

This flag indicates the request for voltage monitoring 2 interrupt.
The LVD2ST flag is read-only, and cleared by the NMICLR.LVD2CLR bit.

[Setting condition]

- When the voltage monitoring 2 interrupt is generated while this interrupt is enabled at its source.

[Clearing condition]

- When 1 is written to the NMICLR.LVD2CLR bit

14.2.12 Non-Maskable Interrupt Enable Register (NMIER)

Address(es): ICU.NMIER 0008 7581h

	b7	b6	b5	b4	b3	b2	b1	b0
	—	—	LVD2EN	LVD1EN	IWDTEN	—	OSTEN	NMIEN
Value after reset:	0	0	0	0	0	0	0	0

Bit	Symbol	Bit Name	Description	R/W
b0	NMIEN	NMI Pin Interrupt Enable	0: NMI pin interrupt is disabled 1: NMI pin interrupt is enabled	R/(W) *1
b1	OSTEN	Oscillation Stop Detection Interrupt Enable	0: Oscillation stop detection interrupt is disabled 1: Oscillation stop detection interrupt is enabled	R/(W) *1
b2	—	Reserved	This bit is read as 0. The write value should be 0.	R/W
b3	IWDTEN	IWDT Underflow/Refresh Error Enable	0: IWDT underflow/refresh error interrupt is disabled 1: IWDT underflow/refresh error interrupt is enabled	R/(W) *1
b4	LVD1EN	Voltage Monitoring 1 Interrupt Enable	0: Voltage monitoring 1 interrupt is disabled 1: Voltage monitoring 1 interrupt is enabled	R/(W) *1
b5	LVD2EN	Voltage Monitoring 2 Interrupt Enable	0: Voltage monitoring 2 interrupt is disabled 1: Voltage monitoring 2 interrupt is enabled	R/(W) *1
b7, b6	—	Reserved	These bits are read as 0. The write value should be 0.	R/W

Note 1. A 1 can be written to this bit only once, and subsequent write accesses are no longer enabled.

NMIEN Bit (NMI Pin Interrupt Enable)

This bit enables the NMI pin interrupt.

A 1 can be written to this bit only once, and subsequent write accesses are no longer enabled.

Writing 0 to this bit is disabled.

OSTEN Bit (Oscillation Stop Detection Interrupt Enable)

This bit enables the oscillation stop detection interrupt.

A 1 can be written to this bit only once, and subsequent write accesses are no longer enabled.

Writing 0 to this bit is disabled.

IWDTEN Bit (IWDT Underflow/Refresh Error Enable)

This bit enables the IWDT underflow/refresh error interrupt.

A 1 can be written to this bit only once, and subsequent write accesses are no longer enabled.

Writing 0 to this bit is disabled.

LVD1EN Bit (Voltage Monitoring 1 Interrupt Enable)

This bit enables the voltage monitoring 1 interrupt.

A 1 can be written to this bit only once, and subsequent write accesses are no longer enabled.

Writing 0 to this bit is disabled.

LVD2EN Bit (Voltage Monitoring 2 Interrupt Enable)

This bit enables the voltage monitoring 2 interrupt.

A 1 can be written to this bit only once, and subsequent write accesses are no longer enabled.

Writing 0 to this bit is disabled.

14.2.13 Non-Maskable Interrupt Status Clear Register (NMICLR)

Address(es): ICU.NMICLR 0008 7582h

	b7	b6	b5	b4	b3	b2	b1	b0
	—	—	LVD2CLR	LVD1CLR	IWDTCLR	—	OSTCLR	NMICLR
Value after reset:	0	0	0	0	0	0	0	0

Bit	Symbol	Bit Name	Description	R/W
b0	NMICLR	NMI Clear	This bit is read as 0. Writing 1 to this bit clears the NMISR.NMIST flag. Writing 0 to this bit has no effect.	R/(W) *1
b1	OSTCLR	OST Clear	This bit is read as 0. Writing 1 to this bit clears the NMISR.OSTST flag. Writing 0 to this bit has no effect.	R/(W) *1
b2	—	Reserved	This bit is read as 0. The write value should be 0.	R/W
b3	IWDTCLR	IWDT Clear	This bit is read as 0. Writing 1 to this bit clears the NMISR.IWDTST flag. Writing 0 to this bit has no effect.	R/(W) *1
b4	LVD1CLR	LVD1 Clear	This bit is read as 0. Writing 1 to this bit clears the NMISR.LVD1ST flag. Writing 0 to this bit has no effect.	R/(W) *1
b5	LVD2CLR	LVD2 Clear	This bit is read as 0. Writing 1 to this bit clears the NMISR.LVD2ST flag. Writing 0 to this bit has no effect.	R/(W) *1
b7, b6	—	Reserved	These bits are read as 0. The write value should be 0.	R/W

Note 1. Only 1 can be written to this bit.

NMICLR Bit (NMI Clear)

Writing 1 to the NMICLR bit clears the NMISR.NMIST flag. This bit is read as 0.

OSTCLR Bit (OST Clear)

Writing 1 to the OSTCLR bit clears the NMISR.OSTST flag. This bit is read as 0.

IWDTCLR Bit (IWDT Clear)

Writing 1 to the IWDTCLR bit clears the NMISR.IWDTST flag. This bit is read as 0.

LVD1CLR Bit (LVD1 Clear)

Writing 1 to the LVD1CLR bit clears the NMISR.LVD1ST flag. This bit is read as 0.

LVD2CLR Bit (LVD2 Clear)

Writing 1 to the LVD2CLR bit clears the NMISR.LVD2ST flag. This bit is read as 0.

14.2.14 NMI Pin Interrupt Control Register (NMICR)

Address(es): ICU.NMICR 0008 7583h

	b7	b6	b5	b4	b3	b2	b1	b0
	—	—	—	—	NMIMD	—	—	—
Value after reset:	0	0	0	0	0	0	0	0

Bit	Symbol	Bit Name	Description	R/W
b2 to b0	—	Reserved	These bits are read as 0. The write value should be 0.	R/W
b3	NMIMD	NMI Detection Set	0: Falling edge 1: Rising edge	R/W
b7 to b4	—	Reserved	These bits are read as 0. The write value should be 0.	R/W

Change the setting of the NMICR register before the NMI pin interrupt is enabled (before setting the NMIER.NMIEN bit to 1).

NMIMD Bit (NMI Detection Set)

This bit specifies the detection edge of the NMI pin interrupt.

14.2.15 NMI Pin Digital Filter Enable Register (NMIFLTE)

Address(es): ICU.NMIFLTE 0008 7590h

	b7	b6	b5	b4	b3	b2	b1	b0
	—	—	—	—	—	—	—	NFLTEN
Value after reset:	0	0	0	0	0	0	0	0

Bit	Symbol	Bit Name	Description	R/W
b0	NFLTEN	NMI Digital Filter Enable	0: Digital filter is disabled 1: Digital filter is enabled	R/W
b7 to b1	—	Reserved	These bits are read as 0. The write value should be 0.	R/W

NFLTEN Bit (NMI Digital Filter Enable)

This bit enables the digital filter used for the NMI pin interrupt.
The digital filter is enabled when the NFLTEN bit is 1, and disabled when the NFLTEN bit is 0.
The NMI pin level is sampled at the sampling clock cycle specified with the NMIFLTC.NFCLKSEL[1:0] bits. When the sampled level matches three times, the output level from the digital filter changes.
For details of the digital filter, see section 14.4.7, Digital Filter.

14.2.16 NMI Pin Digital Filter Setting Register (NMIFLTC)

Address(es): ICU.NMIFLTC 0008 7594h

	b7	b6	b5	b4	b3	b2	b1	b0
	—	—	—	—	—	—	NFCLKSEL[1:0]	
Value after reset:	0	0	0	0	0	0	0	0

Bit	Symbol	Bit Name	Description	R/W
b1, b0	NFCLKSEL[1:0]	NMI Digital Filter Sampling Clock	b1 b0 0 0: PCLK 0 1: PCLK/8 1 0: PCLK/32 1 1: PCLK/64	R/W
b7 to b2	—	Reserved	These bits are read as 0. The write value should be 0.	R/W

NFCLKSEL[1:0] Bits (NMI Digital Filter Sampling Clock)

These bits select the cycle of the digital filter sampling clock for the NMI pin interrupt.

The sampling clock cycle can be selected from among the PCLK (every cycle), PCLK/8 (once every eight cycles), PCLK/32 (once every 32 cycles), and PCLK/64 (once every 64 cycles).

For details of the digital filter, see section 14.4.7, Digital Filter.

14.3 Vector Table

There are two types of interrupts detected by the interrupt controller: maskable interrupts and non-maskable interrupts. When the CPU accepts an interrupt or non-maskable interrupt, it acquires a 4-byte vector address from the vector table.

14.3.1 Interrupt Vector Table

The interrupt vector table is placed in the 1024-byte range (4 bytes × 256 sources) beginning at the address specified in the interrupt table register (INTB) of the CPU. Write a value to the INTB register before enabling interrupts. The value written to the INTB register should be a multiple of 4.
Executing an INT instruction or BRK instruction leads to the generation of an unconditional trap. The same range of memory as shown in Table 14.3, Interrupt Vector Table, is used for the vectors for unconditional traps. The vector for BRK instructions is vector 0 while the vector numbers for INT instructions are specifiable as numbers in the range from 0 to 255.
Table 14.3 lists details of the interrupt vectors. Details of the headings in Table 14.3 are listed below.

Item	Description
Source of interrupt request generation	Name of the source for generation of the interrupt request
Name	Name of the interrupt
Vector no.	Vector number for the interrupt
Vector address offset	Value of the offset from the base address for the vector table
Interrupt detection method	“Edge” or “level” as the method for detection of the interrupt
CPU interrupt	“✓” in this column indicates usability as a CPU interrupt.
Start DTC	“✓” in this column indicates usability as a request for DTC transfer.
Start DMAC	“✓” in this column indicates usability as a request for DMA transfer.
SSBY return	“✓” in this column indicates usability as a request for return from software-standby mode.
IER	Name of the IER register and bit corresponding to the vector number
IPR	Name of the IPR register corresponding to the interrupt source
DTCER	Name of the DTCER register corresponding to the DTC trigger

Table 14.3 Interrupt Vector Table (1/6)

Source of Interrupt Request Generation	Name	Vector No.*1	Vector Address Offset	Interrupt Detection Method	CPU Interrupt	Start DTC	Start DMAC	SSBY Return	IER	IPR	DTCER
—	For an unconditional trap	0	0000h	—	N/A	N/A	N/A	N/A	—	—	—
—	For an unconditional trap	1	0004h	—	N/A	N/A	N/A	N/A	—	—	—
—	For an unconditional trap	2	0008h	—	N/A	N/A	N/A	N/A	—	—	—
—	For an unconditional trap	3	000Ch	—	N/A	N/A	N/A	N/A	—	—	—
—	For an unconditional trap	4	0010h	—	N/A	N/A	N/A	N/A	—	—	—
—	For an unconditional trap	5	0014h	—	N/A	N/A	N/A	N/A	—	—	—
—	For an unconditional trap	6	0018h	—	N/A	N/A	N/A	N/A	—	—	—
—	For an unconditional trap	7	001Ch	—	N/A	N/A	N/A	N/A	—	—	—
—	For an unconditional trap	8	0020h	—	N/A	N/A	N/A	N/A	—	—	—
—	For an unconditional trap	9	0024h	—	N/A	N/A	N/A	N/A	—	—	—
—	For an unconditional trap	10	0028h	—	N/A	N/A	N/A	N/A	—	—	—
—	For an unconditional trap	11	002Ch	—	N/A	N/A	N/A	N/A	—	—	—
—	For an unconditional trap	12	0030h	—	N/A	N/A	N/A	N/A	—	—	—
—	For an unconditional trap	13	0034h	—	N/A	N/A	N/A	N/A	—	—	—
—	For an unconditional trap	14	0038h	—	N/A	N/A	N/A	N/A	—	—	—
—	For an unconditional trap	15	003Ch	—	N/A	N/A	N/A	N/A	—	—	—
BSC	BUSERR	16	0040h	Level	✓	N/A	N/A	N/A	IER02.IEN0	IPR000	—
—	Reserved	17	0044h	—	N/A	N/A	N/A	N/A	—	—	—
—	Reserved	18	0048h	—	N/A	N/A	N/A	N/A	—	—	—
—	Reserved	19	004Ch	—	N/A	N/A	N/A	N/A	—	—	—
—	Reserved	20	0050h	—	N/A	N/A	N/A	N/A	—	—	—
—	Reserved	21	0054h	—	N/A	N/A	N/A	N/A	—	—	—
—	Reserved	22	0058h	—	N/A	N/A	N/A	N/A	—	—	—
FCU	FRDYI	23	005Ch	Edge	✓	N/A	N/A	N/A	IER02.IEN7	IPR002	—
—	Reserved	24	0060h	—	N/A	N/A	N/A	N/A	—	—	—
—	Reserved	25	0064h	—	N/A	N/A	N/A	N/A	—	—	—
—	Reserved	26	0068h	—	N/A	N/A	N/A	N/A	—	—	—
ICU	SWINT	27	006Ch	Edge	✓	✓	N/A	N/A	IER03.IEN3	IPR003	DTCER027
CMT0	CMI0	28	0070h	Edge	✓	✓	✓	N/A	IER03.IEN4	IPR004	DTCER028
CMT1	CMI1	29	0074h	Edge	✓	✓	✓	N/A	IER03.IEN5	IPR005	DTCER029
—	Reserved	30	0078h	—	N/A	N/A	N/A	N/A	—	—	—
—	Reserved	31	007Ch	—	N/A	N/A	N/A	N/A	—	—	—
CAC	FERRF	32	0080h	Level	✓	N/A	N/A	N/A	IER04.IEN0	IPR032	—
	MENDF	33	0084h	Level	✓	N/A	N/A	N/A	IER04.IEN1	IPR033	—
	OVFF	34	0088h	Level	✓	N/A	N/A	N/A	IER04.IEN2	IPR034	—
—	Reserved	35	008Ch	—	N/A	N/A	N/A	N/A	—	—	—
—	Reserved	36	0090h	—	N/A	N/A	N/A	N/A	—	—	—
—	Reserved	37	0094h	—	N/A	N/A	N/A	N/A	—	—	—
—	Reserved	38	0098h	—	N/A	N/A	N/A	N/A	—	—	—
—	Reserved	39	009Ch	—	N/A	N/A	N/A	N/A	—	—	—
—	Reserved	40	00A0h	—	N/A	N/A	N/A	N/A	—	—	—
—	Reserved	41	00A4h	—	N/A	N/A	N/A	N/A	—	—	—
—	Reserved	42	00A8h	—	N/A	N/A	N/A	N/A	—	—	—
—	Reserved	43	00ACh	—	N/A	N/A	N/A	N/A	—	—	—

Table 14.3 Interrupt Vector Table (2/6)

Source of Interrupt Request Generation	Name	Vector No.*1	Vector Address Offset	Interrupt Detection Method	CPU Interrupt	Start DTC	Start DMAC	SSBY Return	IER	IPR	DTCER
RSPI0	SPEI0	44	00B0h	Level	✓	N/A	N/A	N/A	IER05.IEN4	IPR044	—
	SPRI0	45	00B4h	Edge	✓	✓	✓	N/A	IER05.IEN5		DTCER045
	SPTI0	46	00B8h	Edge	✓	✓	✓	N/A	IER05.IEN6		DTCER046
	SPII0	47	00BCh	Level	✓	N/A	N/A	N/A	IER05.IEN7		—
—	Reserved	48	00C0h	—	N/A	N/A	N/A	N/A	—	—	—
—	Reserved	49	00C4h	—	N/A	N/A	N/A	N/A	—	—	—
—	Reserved	50	00C8h	—	N/A	N/A	N/A	N/A	—	—	—
—	Reserved	51	00CCh	—	N/A	N/A	N/A	N/A	—	—	—
RSCAN	COMFRXINT	52	00D0h	Edge	✓	✓	✓	N/A	IER06.IEN4	IPR052	DTCER052
	RXFINT	53	00D4h	Level	✓	N/A	N/A	N/A	IER06.IEN5	IPR053	—
	TXINT	54	00D8h	Level	✓	N/A	N/A	N/A	IER06.IEN6	IPR054	—
	CHERRINT	55	00DCh	Level	✓	N/A	N/A	N/A	IER06.IEN7	IPR055	—
	GLERRINT	56	00E0h	Level	✓	N/A	N/A	N/A	IER07.IEN0	IPR056	—
DOC	DOPCF	57	00E4h	Level	✓	N/A	N/A	N/A	IER07.IEN1	IPR057	—
—	Reserved	58	00E8h	—	N/A	N/A	N/A	N/A	—	—	—
—	Reserved	59	00ECh	—	N/A	N/A	N/A	N/A	—	—	—
—	Reserved	60	00F0h	—	N/A	N/A	N/A	N/A	—	—	—
—	Reserved	61	00F4h	—	N/A	N/A	N/A	N/A	—	—	—
—	Reserved	62	00F8h	—	N/A	N/A	N/A	N/A	—	—	—
—	Reserved	63	00FCh	—	N/A	N/A	N/A	N/A	—	—	—
ICU	IRQ0	64	0100h	Edge/Level	✓	✓	✓	✓	IER08.IEN0	IPR064	DTCER064
	IRQ1	65	0104h	Edge/Level	✓	✓	✓	✓	IER08.IEN1	IPR065	DTCER065
	IRQ2	66	0108h	Edge/Level	✓	✓	✓	✓	IER08.IEN2	IPR066	DTCER066
	IRQ3	67	010Ch	Edge/Level	✓	✓	✓	✓	IER08.IEN3	IPR067	DTCER067
	IRQ4	68	0110h	Edge/Level	✓	✓	N/A	✓	IER08.IEN4	IPR068	DTCER068
	IRQ5	69	0114h	Edge/Level	✓	✓	N/A	✓	IER08.IEN5	IPR069	DTCER069
	IRQ6	70	0118h	Edge/Level	✓	✓	N/A	✓	IER08.IEN6	IPR070	DTCER070
	IRQ7	71	011Ch	Edge/Level	✓	✓	N/A	✓	IER08.IEN7	IPR071	DTCER071
—	Reserved	72	0120h	—	N/A	N/A	N/A	N/A	—	—	—
—	Reserved	73	0124h	—	N/A	N/A	N/A	N/A	—	—	—
—	Reserved	74	0128h	—	N/A	N/A	N/A	N/A	—	—	—
—	Reserved	75	012Ch	—	N/A	N/A	N/A	N/A	—	—	—
—	Reserved	76	0130h	—	N/A	N/A	N/A	N/A	—	—	—
—	Reserved	77	0134h	—	N/A	N/A	N/A	N/A	—	—	—
—	Reserved	78	0138h	—	N/A	N/A	N/A	N/A	—	—	—
—	Reserved	79	013Ch	—	N/A	N/A	N/A	N/A	—	—	—
ELC	ELSR8I	80	0140h	Edge	✓	N/A	N/A	✓	IER0A.IEN0	IPR080	—
—	Reserved	81	0144h	—	N/A	N/A	N/A	N/A	—	—	—
—	Reserved	82	0148h	—	N/A	N/A	N/A	N/A	—	—	—
—	Reserved	83	014Ch	—	N/A	N/A	N/A	N/A	—	—	—
—	Reserved	84	0150h	—	N/A	N/A	N/A	N/A	—	—	—
—	Reserved	85	0154h	—	N/A	N/A	N/A	N/A	—	—	—
—	Reserved	86	0158h	—	N/A	N/A	N/A	N/A	—	—	—
—	Reserved	87	015Ch	—	N/A	N/A	N/A	N/A	—	—	—
LVD	LVD1	88	0160h	Edge	✓	N/A	N/A	✓	IER0B.IEN0	IPR088	—
	LVD2	89	0164h	Edge	✓	N/A	N/A	✓	IER0B.IEN1	IPR089	—

Table 14.3 Interrupt Vector Table (3/6)

Source of Interrupt Request Generation	Name	Vector No.*1	Vector Address Offset	Interrupt Detection Method	CPU Interrupt	Start DTC	Start DMAC	SSBY Return	IER	IPR	DTCER
—	Reserved	90	0168h	—	N/A	N/A	N/A	N/A	—	—	—
—	Reserved	91	016Ch	—	N/A	N/A	N/A	N/A	—	—	—
—	Reserved	92	0170h	—	N/A	N/A	N/A	N/A	—	—	—
—	Reserved	93	0174h	—	N/A	N/A	N/A	N/A	—	—	—
—	Reserved	94	0178h	—	N/A	N/A	N/A	N/A	—	—	—
—	Reserved	95	017Ch	—	N/A	N/A	N/A	N/A	—	—	—
—	Reserved	96	0180h	—	N/A	N/A	N/A	N/A	—	—	—
—	Reserved	97	0184h	—	N/A	N/A	N/A	N/A	—	—	—
—	Reserved	98	0188h	—	N/A	N/A	N/A	N/A	—	—	—
—	Reserved	99	018Ch	—	N/A	N/A	N/A	N/A	—	—	—
—	Reserved	100	0190h	—	N/A	N/A	N/A	N/A	—	—	—
—	Reserved	101	0194h	—	N/A	N/A	N/A	N/A	—	—	—
S12AD	S12ADI0	102	0198h	Edge	✓	✓	✓	N/A	IER0C.IEN6	IPR102	DTCER102
	GBADI	103	019Ch	Edge	✓	✓	✓	N/A	IER0C.IEN7	IPR103	DTCER103
—	Reserved	104	01A0h	—	N/A	N/A	N/A	N/A	—	—	—
—	Reserved	105	01A4h	—	N/A	N/A	N/A	N/A	—	—	—
ELC	ELSR18I	106	01A8h	Edge	✓	✓	✓	N/A	IER0D.IEN2	IPR106	DTCER106
	ELSR19I	107	01ACh	Edge	✓	✓	✓	N/A	IER0D.IEN3	IPR107	DTCER107
—	Reserved	108	01B0h	—	N/A	N/A	N/A	N/A	—	—	—
—	Reserved	109	01B4h	—	N/A	N/A	N/A	N/A	—	—	—
—	Reserved	110	01B8h	—	N/A	N/A	N/A	N/A	—	—	—
—	Reserved	111	01BCh	—	N/A	N/A	N/A	N/A	—	—	—
—	Reserved	112	01C0h	—	N/A	N/A	N/A	N/A	—	—	—
—	Reserved	113	01C4h	—	N/A	N/A	N/A	N/A	—	—	—
MTU0	TGIA0	114	01C8h	Edge	✓	✓	✓	N/A	IER0E.IEN2	IPR114	DTCER114
	TGIB0	115	01CCh	Edge	✓	✓	N/A	N/A	IER0E.IEN3		DTCER115
	TGIC0	116	01D0h	Edge	✓	✓	N/A	N/A	IER0E.IEN4		DTCER116
	TGID0	117	01D4h	Edge	✓	✓	N/A	N/A	IER0E.IEN5		DTCER117
	TCIV0	118	01D8h	Edge	✓	N/A	N/A	N/A	IER0E.IEN6	IPR118	—
	TGIE0	119	01DCh	Edge	✓	N/A	N/A	N/A	IER0E.IEN7		—
	TGIF0	120	01E0h	Edge	✓	N/A	N/A	N/A	IER0F.IEN0		—
MTU1	TGIA1	121	01E4h	Edge	✓	✓	✓	N/A	IER0F.IEN1	IPR121	DTCER121
	TGIB1	122	01E8h	Edge	✓	✓	N/A	N/A	IER0F.IEN2		DTCER122
	TCIV1	123	01ECh	Edge	✓	N/A	N/A	N/A	IER0F.IEN3	IPR123	—
	TCIU1	124	01F0h	Edge	✓	N/A	N/A	N/A	IER0F.IEN4		—
MTU2	TGIA2	125	01F4h	Edge	✓	✓	✓	N/A	IER0F.IEN5	IPR125	DTCER125
	TGIB2	126	01F8h	Edge	✓	✓	N/A	N/A	IER0F.IEN6		DTCER126
	TCIV2	127	01FCh	Edge	✓	N/A	N/A	N/A	IER0F.IEN7	IPR127	—
	TCIU2	128	0200h	Edge	✓	N/A	N/A	N/A	IER10.IEN0		—
MTU3	TGIA3	129	0204h	Edge	✓	✓	✓	N/A	IER10.IEN1	IPR129	DTCER129
	TGIB3	130	0208h	Edge	✓	✓	N/A	N/A	IER10.IEN2		DTCER130
	TGIC3	131	020Ch	Edge	✓	✓	N/A	N/A	IER10.IEN3		DTCER131
	TGID3	132	0210h	Edge	✓	✓	N/A	N/A	IER10.IEN4		DTCER132
	TCIV3	133	0214h	Edge	✓	N/A	N/A	N/A	IER10.IEN5	IPR133	—

Table 14.3 Interrupt Vector Table (4/6)

Source of Interrupt Request Generation	Name	Vector No.*1	Vector Address Offset	Interrupt Detection Method	CPU Interrupt	Start DTC	Start DMAC	SSBY Return	IER	IPR	DTCER
MTU4	TGIA4	134	0218h	Edge	✓	✓	✓	N/A	IER10.IEN6	IPR134	DTCER134
	TGIB4	135	021Ch	Edge	✓	✓	N/A	N/A	IER10.IEN7		DTCER135
	TGIC4	136	0220h	Edge	✓	✓	N/A	N/A	IER11.IEN0		DTCER136
	TGID4	137	0224h	Edge	✓	✓	N/A	N/A	IER11.IEN1		DTCER137
	TCIV4	138	0228h	Edge	✓	✓	N/A	N/A	IER11.IEN2	IPR138	DTCER138
MTU5	TGIU5	139	022Ch	Edge	✓	✓	N/A	N/A	IER11.IEN3	IPR139	DTCER139
	TGIV5	140	0230h	Edge	✓	✓	N/A	N/A	IER11.IEN4		DTCER140
	TGIW5	141	0234h	Edge	✓	✓	N/A	N/A	IER11.IEN5		DTCER141
—	Reserved	142	0238h	—	N/A	N/A	N/A	N/A	—	—	—
—	Reserved	143	023Ch	—	N/A	N/A	N/A	N/A	—	—	—
—	Reserved	144	0240h	—	N/A	N/A	N/A	N/A	—	—	—
—	Reserved	145	0244h	—	N/A	N/A	N/A	N/A	—	—	—
—	Reserved	146	0248h	—	N/A	N/A	N/A	N/A	—	—	—
—	Reserved	147	024Ch	—	N/A	N/A	N/A	N/A	—	—	—
—	Reserved	148	0250h	—	N/A	N/A	N/A	N/A	—	—	—
—	Reserved	149	0254h	—	N/A	N/A	N/A	N/A	—	—	—
—	Reserved	150	0258h	—	N/A	N/A	N/A	N/A	—	—	—
—	Reserved	151	025Ch	—	N/A	N/A	N/A	N/A	—	—	—
—	Reserved	152	0260h	—	N/A	N/A	N/A	N/A	—	—	—
—	Reserved	153	0264h	—	N/A	N/A	N/A	N/A	—	—	—
—	Reserved	154	0268h	—	N/A	N/A	N/A	N/A	—	—	—
—	Reserved	155	026Ch	—	N/A	N/A	N/A	N/A	—	—	—
—	Reserved	156	0270h	—	N/A	N/A	N/A	N/A	—	—	—
—	Reserved	157	0274h	—	N/A	N/A	N/A	N/A	—	—	—
—	Reserved	158	0278h	—	N/A	N/A	N/A	N/A	—	—	—
—	Reserved	159	027Ch	—	N/A	N/A	N/A	N/A	—	—	—
—	Reserved	160	0280h	—	N/A	N/A	N/A	N/A	—	—	—
—	Reserved	161	0284h	—	N/A	N/A	N/A	N/A	—	—	—
—	Reserved	162	0288h	—	N/A	N/A	N/A	N/A	—	—	—
—	Reserved	163	028Ch	—	N/A	N/A	N/A	N/A	—	—	—
—	Reserved	164	0290h	—	N/A	N/A	N/A	N/A	—	—	—
—	Reserved	165	0294h	—	N/A	N/A	N/A	N/A	—	—	—
—	Reserved	166	0298h	—	N/A	N/A	N/A	N/A	—	—	—
—	Reserved	167	029Ch	—	N/A	N/A	N/A	N/A	—	—	—
—	Reserved	168	02A0h	—	N/A	N/A	N/A	N/A	—	—	—
—	Reserved	169	02A4h	—	N/A	N/A	N/A	N/A	—	—	—
POE	OEI1	170	02A8h	Level	✓	N/A	N/A	N/A	IER15.IEN2	IPR170	—
	OEI2	171	02ACh	Level	✓	N/A	N/A	N/A	IER15.IEN3	IPR171	—
—	Reserved	172	02B0h	—	N/A	N/A	N/A	N/A	—	—	—
—	Reserved	173	02B4h	—	N/A	N/A	N/A	N/A	—	—	—
TMR0	CMIA0	174	02B8h	Edge	✓	✓	N/A	N/A	IER15.IEN6	IPR174	DTCER174
	CMIB0	175	02BCh	Edge	✓	✓	N/A	N/A	IER15.IEN7		DTCER175
	OVI0	176	02C0h	Edge	✓	N/A	N/A	N/A	IER16.IEN0		—
TMR1	CMIA1	177	02C4h	Edge	✓	✓	N/A	N/A	IER16.IEN1	IPR177	DTCER177
	CMIB1	178	02C8h	Edge	✓	✓	N/A	N/A	IER16.IEN2		DTCER178
	OVI1	179	02CCh	Edge	✓	N/A	N/A	N/A	IER16.IEN3		—

Table 14.3 Interrupt Vector Table (5/6)

Source of Interrupt Request Generation	Name	Vector No.*1	Vector Address Offset	Interrupt Detection Method	CPU Interrupt	Start DTC	Start DMAC	SSBY Return	IER	IPR	DTCER
TMR2	CMIA2	180	02D0h	Edge	✓	✓	N/A	N/A	IER16.IEN4	IPR180	DTCER180
	CMIB2	181	02D4h	Edge	✓	✓	N/A	N/A	IER16.IEN5		DTCER181
	OVI2	182	02D8h	Edge	✓	N/A	N/A	N/A	IER16.IEN6		—
TMR3	CMIA3	183	02DCh	Edge	✓	✓	N/A	N/A	IER16.IEN7	IPR183	DTCER183
	CMIB3	184	02E0h	Edge	✓	✓	N/A	N/A	IER17.IEN0		DTCER184
	OVI3	185	02E4h	Edge	✓	N/A	N/A	N/A	IER17.IEN1		—
—	Reserved	186	02E8h	—	N/A	N/A	N/A	N/A	—	—	—
—	Reserved	187	02ECh	—	N/A	N/A	N/A	N/A	—	—	—
—	Reserved	188	02F0h	—	N/A	N/A	N/A	N/A	—	—	—
—	Reserved	189	02F4h	—	N/A	N/A	N/A	N/A	—	—	—
—	Reserved	190	02F8h	—	N/A	N/A	N/A	N/A	—	—	—
—	Reserved	191	02FCh	—	N/A	N/A	N/A	N/A	—	—	—
—	Reserved	192	0300h	—	N/A	N/A	N/A	N/A	—	—	—
—	Reserved	193	0304h	—	N/A	N/A	N/A	N/A	—	—	—
—	Reserved	194	0308h	—	N/A	N/A	N/A	N/A	—	—	—
—	Reserved	195	030Ch	—	N/A	N/A	N/A	N/A	—	—	—
—	Reserved	196	0310h	—	N/A	N/A	N/A	N/A	—	—	—
—	Reserved	197	0314h	—	N/A	N/A	N/A	N/A	—	—	—
DMAC	DMAC0I	198	0318h	Edge	✓	✓	N/A	N/A	IER18.IEN6	IPR198	DTCER198
	DMAC1I	199	031Ch	Edge	✓	✓	N/A	N/A	IER18.IEN7	IPR199	DTCER199
	DMAC2I	200	0320h	Edge	✓	✓	N/A	N/A	IER19.IEN0	IPR200	DTCER200
	DMAC3I	201	0324h	Edge	✓	✓	N/A	N/A	IER19.IEN1	IPR201	DTCER201
—	Reserved	202	0328h	—	N/A	N/A	N/A	N/A	—	—	—
—	Reserved	203	032Ch	—	N/A	N/A	N/A	N/A	—	—	—
—	Reserved	204	0330h	—	N/A	N/A	N/A	N/A	—	—	—
—	Reserved	205	0334h	—	N/A	N/A	N/A	N/A	—	—	—
DSAD0	ADI0	206	0338h	Edge	✓	✓	✓	N/A	IER19.IEN6	IPR206	DTCER206
	SCANEND0	207	033Ch	Edge	✓	✓	✓	N/A	IER19.IEN7	IPR207	DTCER207
—	Reserved	208	0340h	—	N/A	N/A	N/A	N/A	—	—	—
DSAD1	ADI1	209	0344h	Edge	✓	✓	✓	N/A	IER1A.IEN1	IPR209	DTCER209
	SCANEND1	210	0348h	Edge	✓	✓	✓	N/A	IER1A.IEN2	IPR210	DTCER210
—	Reserved	211	034Ch	—	N/A	N/A	N/A	N/A	—	—	—
—	Reserved	212	0350h	—	N/A	N/A	N/A	N/A	—	—	—
—	Reserved	213	0354h	—	N/A	N/A	N/A	N/A	—	—	—
—	Reserved	214	0358h	—	N/A	N/A	N/A	N/A	—	—	—
—	Reserved	215	035Ch	—	N/A	N/A	N/A	N/A	—	—	—
—	Reserved	216	0360h	—	N/A	N/A	N/A	N/A	—	—	—
—	Reserved	217	0364h	—	N/A	N/A	N/A	N/A	—	—	—
SCI1	ERI1	218	0368h	Level	✓	N/A	N/A	N/A	IER1B.IEN2	IPR218	—
	RXI1	219	036Ch	Edge	✓	✓	✓	N/A	IER1B.IEN3		DTCER219
	TXI1	220	0370h	Edge	✓	✓	✓	N/A	IER1B.IEN4		DTCER220
	TEI1	221	0374h	Level	✓	N/A	N/A	N/A	IER1B.IEN5		—
SCI5	ERI5	222	0378h	Level	✓	N/A	N/A	N/A	IER1B.IEN6	IPR222	—
	RXI5	223	037Ch	Edge	✓	✓	✓	N/A	IER1B.IEN7		DTCER223
	TXI5	224	0380h	Edge	✓	✓	✓	N/A	IER1C.IEN0		DTCER224
	TEI5	225	0384h	Level	✓	N/A	N/A	N/A	IER1C.IEN1		—

Table 14.3 Interrupt Vector Table (6/6)

Source of Interrupt Request Generation	Name	Vector No.*1	Vector Address Offset	Interrupt Detection Method	CPU Interrupt	Start DTC	Start DMAC	SSBY Return	IER	IPR	DTCER
SCI6	ERI6	226	0388h	Level	✓	N/A	N/A	N/A	IER1C.IEN2	IPR226	—
	RXI6	227	038Ch	Edge	✓	✓	✓	N/A	IER1C.IEN3		DTCER227
	TXI6	228	0390h	Edge	✓	✓	✓	N/A	IER1C.IEN4		DTCER228
	TEI6	229	0394h	Level	✓	N/A	N/A	N/A	IER1C.IEN5		—
—	Reserved	230	0398h	—	N/A	N/A	N/A	N/A	—	—	—
—	Reserved	231	039Ch	—	N/A	N/A	N/A	N/A	—	—	—
—	Reserved	232	03A0h	—	N/A	N/A	N/A	N/A	—	—	—
—	Reserved	233	03A4h	—	N/A	N/A	N/A	N/A	—	—	—
—	Reserved	234	03A8h	—	N/A	N/A	N/A	N/A	—	—	—
—	Reserved	235	03ACh	—	N/A	N/A	N/A	N/A	—	—	—
—	Reserved	236	03B0h	—	N/A	N/A	N/A	N/A	—	—	—
—	Reserved	237	03B4h	—	N/A	N/A	N/A	N/A	—	—	—
SCI12	ERI12	238	03B8h	Level	✓	N/A	N/A	N/A	IER1D.IEN6	IPR238	—
	RXI12	239	03BCh	Edge	✓	✓	✓	N/A	IER1D.IEN7		DTCER239
	TXI12	240	03C0h	Edge	✓	✓	✓	N/A	IER1E.IEN0		DTCER240
	TEI12	241	03C4h	Level	✓	N/A	N/A	N/A	IER1E.IEN1		—
	SCIX0	242	03C8h	Level	✓	N/A	N/A	N/A	IER1E.IEN2	IPR242	—
	SCIX1	243	03CCh	Level	✓	N/A	N/A	N/A	IER1E.IEN3	IPR243	—
	SCIX2	244	03D0h	Level	✓	N/A	N/A	N/A	IER1E.IEN4	IPR244	—
	SCIX3	245	03D4h	Level	✓	N/A	N/A	N/A	IER1E.IEN5	IPR245	—
RIIC0	EEI0	246	03D8h	Level	✓	N/A	N/A	N/A	IER1E.IEN6	IPR246	—
	RXI0	247	03DCh	Edge	✓	✓	✓	N/A	IER1E.IEN7	IPR247	DTCER247
	TXI0	248	03E0h	Edge	✓	✓	✓	N/A	IER1F.IEN0	IPR248	DTCER248
	TEI0	249	03E4h	Level	✓	N/A	N/A	N/A	IER1F.IEN1	IPR249	—
—	Reserved	250	03E8h	—	N/A	N/A	N/A	N/A	—	—	—
—	Reserved	251	03ECh	—	N/A	N/A	N/A	N/A	—	—	—
—	Reserved	252	03F0h	—	N/A	N/A	N/A	N/A	—	—	—
—	Reserved	253	03F4h	—	N/A	N/A	N/A	N/A	—	—	—
—	Reserved	254	03F8h	—	N/A	N/A	N/A	N/A	—	—	—
—	Reserved	255	03FCh	—	N/A	N/A	N/A	N/A	—	—	—

Note 1. An interrupt source with a smaller vector number takes precedence.

14.3.2 Fast Interrupt Vector Table

The address of the entry in the interrupt vector table that corresponds to the vector number of the fast interrupt is placed in the fast interrupt vector register (FINTV) of the CPU.

14.3.3 Non-maskable Interrupt Vector Area

Non-maskable interrupts use the vector area in the exception vector table.
The exception vector table is allocated to the 128-byte area (4 bytes × 32 sources) beginning with the address set in the EXTB register in the CPU. Set a multiple of 4 in the EXTB register.

14.4 Interrupt Operation

The interrupt controller performs the following processing.

- Detecting interrupts
- Enabling and disabling interrupts
- Selecting interrupt request destinations (CPU interrupt, DTC trigger, or DMAC trigger)
- Determining priority

14.4.1 Detecting Interrupts

Interrupt requests are detected in either of two ways: the detection of edges of the interrupt signal or the detection of a level of the interrupt signal.
Edge detection or level detection is selected for the IRQi pins (i = 0 to 7) as external interrupt requests by the setting of the IRQMD[1:0] bits in IRQCRi.
For interrupts from peripheral modules, either edge detection or level detection is determined per interrupt source.
For the correspondence between interrupt sources and methods of detection, see Table 14.3, Interrupt Vector Table.

14.4.1.1 Operation of Status Flags for Edge-Detected Interrupts

Figure 14.2 shows the operation of the IR flag in IRn (n = interrupt vector number) in the case of edge detection of an interrupt from a peripheral module or on an external pin.
The IR flag in IRn is set to 1 immediately after the transition of the interrupt signal due to generation of the interrupt. If the CPU is the request destination for the interrupt, the IR flag is automatically cleared to 0 on acceptance of the interrupt. If the DMAC or DTC is the request destination for the interrupt, the IRn.IR flag operation differs according to the DMAC/DTC transfer settings and transfer count. For details, see Table 14.4, Operation When Starting the DMAC/DTC.

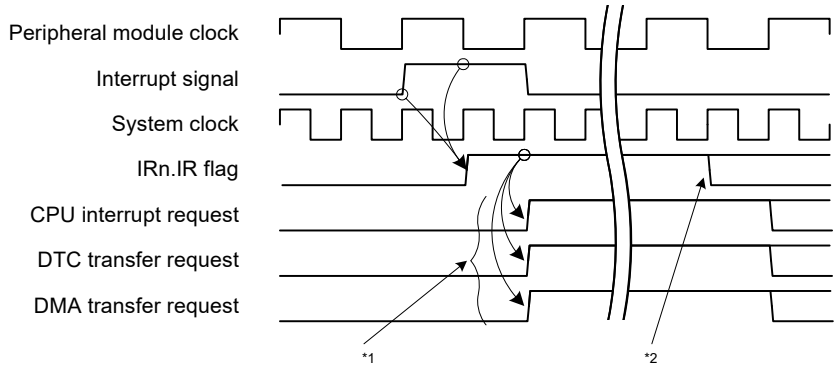

Note 1. One of the following requests is issued: CPU interrupt request, DTC transfer request, and DMA transfer request. For details of the setting, see section 14.4.3, Selecting Interrupt Request Destinations.
Note 2. When the CPU interrupt request is specified, this flag is set to 0 on acceptance of a CPU interrupt. For the timing of 0 setting at the DTC transfer request or DMA transfer request, see Table 14.4, Operation When Starting the DMAC/DTC.

Figure 14.2 IRn.IR Flag Operation for Edge Detection Interrupts

Figure 14.3 to Figure 14.5 show the interrupt signals of the interrupt controller. Note that the timings of the interrupts with interrupt vector numbers 64 to 95 are different from those of other interrupts. For the IRQ pin interrupts with interrupt vector numbers 64 to 79, “internal delay + 2 PCLK cycles” of delay is added after the IRQ pin input. For the interrupts with interrupt vector numbers 80 to 95, “2 PCLK cycles” of delay is added.

If an interrupt signal is generated every clock cycle, the subsequent interrupts cannot be detected; secure two or more clock cycles of the system clock between issuance of continuous interrupt requests.

While the IRn.IR flag is 1 after an interrupt request is generated, the interrupt request that is generated again will be ignored.*1
Figure 14.3 shows the timing for IRn.IR flag re-setting.

Note 1. When the transmission or reception interrupt of the SCI, RIIC, RSCAN, or RSPI is generated with the IRn.IR flag being 1, the interrupt request is retained. After the IRn.IR flag is cleared to 0, the IRn.IR flag is set to 1 again by the retained request. For details, see descriptions of the interrupts in section 28, Serial Communications Interface (SCIg, SCIh), section 29, I2C-bus Interface (RIICa), and section 31, Serial Peripheral Interface (RSPIb).

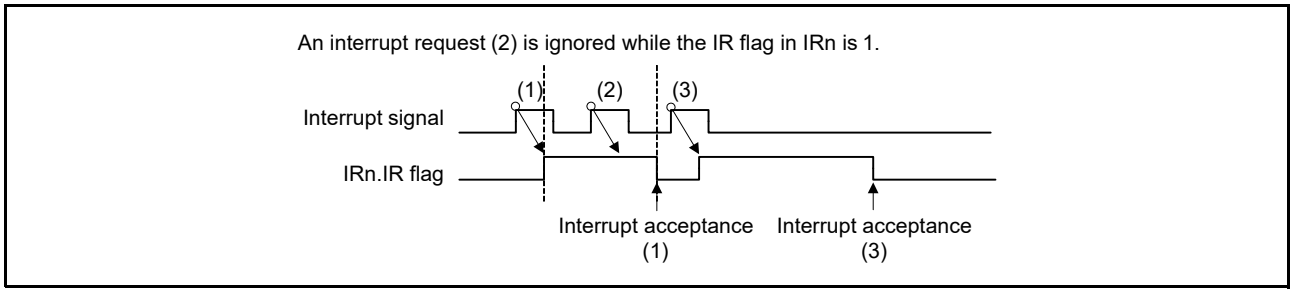

Figure 14.3 Timing for IRn.IR Flag Re-Setting

If an interrupt is disabled after the IRn.IR flag is set to 1 (output of the interrupt request is disabled by the interrupt enable bit of the relevant peripheral module), the IRn.IR flag is not affected but retains its state. Figure 14.4 shows operation when the interrupt is disabled.

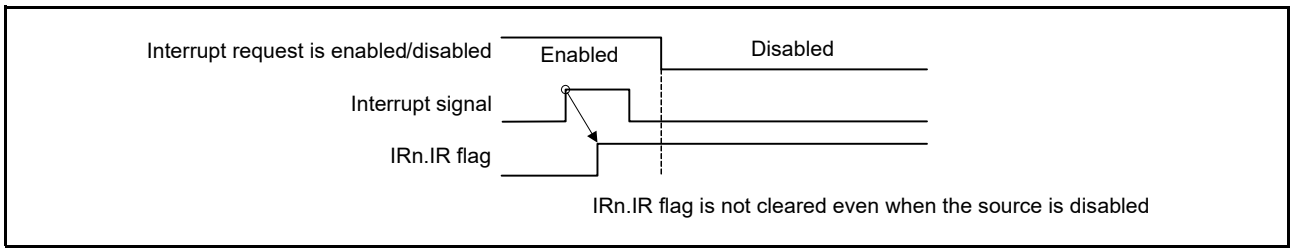

Figure 14.4 Relationship between IRn.IR Flag Operation and Disabling of Interrupt Request

14.4.1.2 Operation of Status Flags for Level-Detected Interrupts

Figure 14.5 shows the operation of the interrupt status flag (IR flag) in IRn (n = interrupt vector number) in the case of level detection of an interrupt from a peripheral module or an external pin.
The IR flag in IRn remains set to 1 as long as the interrupt signal is asserted. To clear the IRn.IR flag to 0, clear the interrupt request in the source generating the interrupt. Confirm that the interrupt request flag in the source generating the interrupt has been cleared to 0 and that the IRn.IR flag has been cleared to 0, and then complete the interrupt handling.

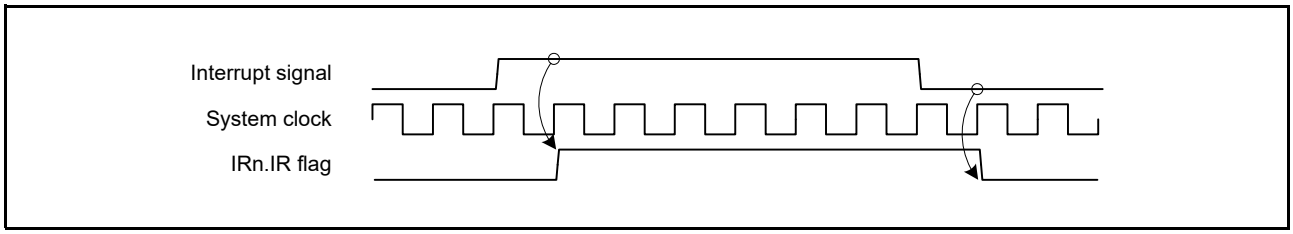

Figure 14.5 IRn.IR Flag Operation for Level Detection Interrupts

Figure 14.6 shows the procedure for handling level detection interrupts.

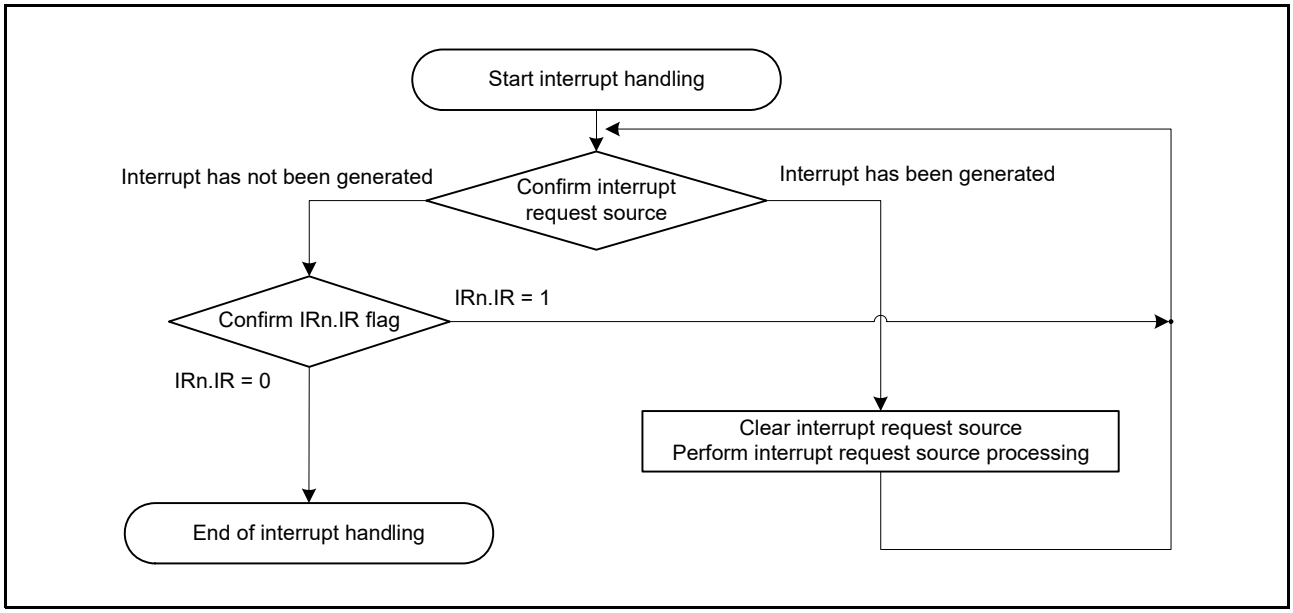

Figure 14.6 Procedure for Handling Level Detection Interrupts

14.4.2 Enabling and Disabling Interrupt Sources

Enabling requests from a given interrupt source requires the following settings.

1. In the case of interrupt requests from peripheral modules, setting the interrupt enable bit for the peripheral module to permit the output of interrupt requests from the source
2. Enabling of the interrupt by the IERm.IENj bit (m = 02h to 1Fh; j = 0 to 7)

When an interrupt request that is enabled at the corresponding source is generated, the corresponding IRn.IR flag (n = interrupt vector number) is set to 1.
Setting the IERm.IENj bit to enable an interrupt request allows the interrupt request for which the corresponding IRn.IR is 1 to be output to the interrupt request destination. Setting the IERm.IENj bit to disable an interrupt request suspends the output of the interrupt request for which the corresponding IRn.IR is 1.
The IRn.IR flag is not affected by the IERm.IENj bit.

Use the following procedure to disable interrupt requests.

1. Set the IERm.IENj bit to disable interrupt requests.
2. Set the peripheral module interrupt output enable bit to disable the output. Read the last written register and confirm that writing is completed.
3. Check the IRn.IR flag, and clear the IRn.IR flag if necessary.*1

Note 1. To disable the transmission or reception interrupt of the SCI, RIIC, or RSPI from the enabled state, clear the IRn.IR flag to 0 using the above procedure. For details, see descriptions of the interrupts in section 28, Serial Communications Interface (SCIg, SCIh), section 29, I2C-bus Interface (RIICa), and section 31, Serial Peripheral Interface (RSPIb).

14.4.3 Selecting Interrupt Request Destinations

Possible settings for the request destination of each interrupt are fixed. That is, settings for request destination other than those indicated in Table 14.3, Interrupt Vector Table, are not possible. Do not make an interrupt request destination setting that is not indicated by a "✓" in Table 14.3.
If the DMAC or DTC is selected as the destination for requests from an IRQi pin (i = 0 to 7), be sure to set the IRQMD[1:0] bits in IRQCRi for that interrupt to select edge detection.
The following describes how to specify the destinations of interrupt requests.

(1) DMAC Trigger

Make the following settings for each source while the IERm.IENj bit (m = 02h to 1Fh; j = 0 to 7) is 0.

1. Specify the vector number of the desired interrupt in the DMAC trigger select register (DMRSRm) for the required channel of the DMAC.*1
2. Set the trigger for the target DMAC channel (DMACm.DMTMD.DCTG[1:0]) to 01b (interrupt module detection).
3. Set the DMAC transfer request enable bit for the target DMAC channel (DMACm.DMCNT.DTE) to 1.

After making the above settings, set the IERm.IENj bit to 1.
In addition, set the DMAC operation enable bit (DMAST.DMST) to 1. The order of making settings for each interrupt and enabling the DMAC operation enable bit does not matter.
For the DMAC setting procedure, refer to section 17.3.7, Activating the DMAC in section 17, DMA Controller (DMACA).

(2) DTC Trigger

Make the following settings for each source while the IERm.IENj bit (m = 02h to 1Fh; j = 0 to 7) is 0.

- Set the DTC transfer request enable bit in the DTC transfer request enable register (DTCERn.DTCE (n = interrupt vector number)) for the pertinent source to 1.*1

After making the above settings, set the IERm.IENj bit to 1.
In addition, set the DTC module start bit (DTCST.DTCST) to 1. The order of making settings for each interrupt and enabling the DTC module start bit does not matter.
For the DTC setting procedure, refer to section 18.5, DTC Setting Procedure, in section 18, Data Transfer Controller (DTCa).

Note 1. Do not set a DTC transfer request enable bit (DTCERn.DTCE) and a DMAC trigger select register (DMRSRm) to select the same source. Do not select the same source in more than one DMRSRm register.

(3) CPU Interrupt Request

If the interrupt request destination is neither the DMAC nor the DTC, the interrupt request is sent to the CPU. Set the IERm.IENj bit (m = 02h to 1Fh; j = 0 to 7) to 1 while neither the DMAC trigger settings nor the DTC trigger settings described above are in place.

Table 14.4 shows operation when the DMAC or DTC is the request destination.

Table 14.4 Operation When Starting the DMAC/DTC

Interrupt Request Destination	DISEL *1	Remaining Number of Transfer Operations	Operation per Request	IR*2	Interrupt Request Destination after Transfer
DMAC	1	≠ 0	DMA transfer → CPU interrupt	Cleared on interrupt acceptance by the CPU	DMAC
		= 0	DMA transfer → CPU interrupt	Cleared on interrupt acceptance by the CPU	The DMACm.DMCNT.DTE bit is cleared and the CPU becomes the destination.
	0	≠ 0	DMA transfer	Cleared at the start of DMAC transfer	DMAC
		= 0	DMA transfer*3	Cleared at the start of DMAC transfer*3	The DMACm.DMCNT.DTE bit is cleared and the CPU becomes the destination.
DTC*4	1	≠ 0	DTC transfer → CPU interrupt	Cleared on interrupt acceptance by the CPU	DTC
		= 0	DTC transfer → CPU interrupt	Cleared on interrupt acceptance by the CPU	The DTCERn.DTCE bit is cleared and the CPU becomes the destination.
	0	≠ 0	DTC transfer	Cleared at the start of DTC data transfer after reading DTC transfer information	DTC
		= 0	DTC transfer → CPU interrupt*3	Cleared on interrupt acceptance by the CPU*3	The DTCERn.DTCE bit is cleared and the CPU becomes the destination.

Note 1. DISEL for the DMAC is set by the DMACm.DMCSL.DISEL bit; DISEL for the DTC is set by the DTC.MRB.DISEL bit.
Note 2. When the IRn.IR flag is 1, an interrupt request (DTC or DMA transfer request) that is generated again will be ignored.
Note 3. When the DISEL bit is 0, operation with the remaining number of transfer operations being 0 differs according to whether the source is for the DTC or DMAC.
Note 4. For chain transfer, DTC transfer continues until the last chain transfer ends. Whether a CPU interrupt is generated at the end of chain transfer, the IRn.IR flag clear timing, and the interrupt request destination after transfer are determined by the state of DISEL and the remaining transfer count at the end of chain transfer. For the chain transfer, see Table 18.3, Chain Transfer Conditions in section 18, Data Transfer Controller (DTCa).

The request destination for an interrupt should be changed while the IERm.IENj bit is 0.

When a source is to be changed to an interrupt request or the DMAC trigger source is to be changed while a transfer is not complete (i.e. while the DMACm.DMCNT.DTE bit has not been cleared) after the settings described under (1) DMAC Trigger have been made, follow the procedure below.

1. For both the source to be withdrawn and the source that will have a new trigger, clear the IENj bits in IERm to 0.
2. Check the state of transfer by the DMAC. If transfer is in progress, wait for its completion.
3. Make the settings described under (1) DMAC Trigger.

When a source is to be changed to an interrupt request or the DTC transfer information is to be changed while a transfer is not complete (i.e. while the DTCERn.DTCE bit (n = interrupt vector number) has not been cleared) after the settings described under (2) DTC Trigger have been made, follow the procedure below.

1. For both the source to be withdrawn and the source that will have a new trigger, clear the IENj bits in IERm to 0.
2. Check the state of transfer by the DTC. If transfer is in progress, wait for its completion.
3. Make the settings described under (2) DTC Trigger.

14.4.4 Determining Priority

Interrupt priority is determined for each interrupt request destination.
The priority for each interrupt request destination is determined as follows.

(1) Determining Priority when the CPU is the Request Destination of the Interrupt

A source selected for the fast interrupt has the highest priority. After that, an interrupt source with a larger value of the interrupt priority level select bits (IPR[3:0]) in IPRn takes priority. If interrupts with the same priority level are generated by multiple sources, the source with the smallest vector number takes precedence.

(2) Determining Priority when the DTC is the Request Destination of the Interrupt

The IPR[3:0] bits in IPRn (n = interrupt vector number) have no effect. An interrupt source with a smaller vector number takes precedence.

(3) Determining Priority when the DMAC is the Request Destination of the Interrupt

The IPR[3:0] bits in IPRn have no effect. Regarding the order of priority of DMAC channels, see section 17, DMA Controller (DMACA).

14.4.5 Multiple Interrupts

To enable multiple interrupts of the CPU, set the PSW.I bit to 1 (interrupt enabled) in the handling routine of accepted interrupts.
The PSW.IPL[3:0] bits immediately after processing branches to the interrupt handling routine are set to the same value as the interrupt priority level of the accepted interrupt request. If an interrupt request which has an interrupt level higher than that of the PSW.IPL[3:0] bits is generated at this time, this interrupt request (for multiple interrupts) is accepted.
If the interrupt priority level of the accepted interrupt request is 15 (fast interrupt or interrupt when IPR[3:0] are set to 1111b), multiple interrupts are not generated.

14.4.6 Fast Interrupt

The fast interrupt is an interrupt for executing a faster interrupt response by the CPU, so only one of the interrupt sources can be assigned.
The interrupt priority level of the fast interrupt is 15 (highest) regardless of the setting of the IPR[3:0] bits in IPRn (n = interrupt vector number). In addition, the fast interrupt is accepted with precedence over other interrupt sources with level 15. However, when the value of the PSW.IPL[3:0] bits are 1111b (priority level 15), even the fast interrupt cannot be accepted.
To assign an interrupt source to the fast interrupt, specify the vector number of the source in the FIR.FVCT[7:0] bits, and set the FIR.FIEN bit to 1 (fast interrupt is enabled).
For details on the fast interrupt, see section 2, CPU and section 13, Exception Handling.

14.4.7 Digital Filter

The digital filter function is provided for the external interrupt request IRQi pins (i = 0 to 7) and NMI pin interrupt.
The digital filter samples input signals at the filter sampling clock (PCLK) and removes the pulses of which length is less than three sampling cycles.
To use the digital filter for the IRQi pin, set the sampling clock cycle (PCLK, PCLK/8, PCLK/32, or PCLK/64) with the IRQFLTC0.FCLKSELi[1:0] bits and set the IRQFLTE0.FLTENi bit to 1 (digital filter enabled).
To use the digital filter for the NMI pin, set the sampling clock cycle (PCLK, PCLK/8, PCLK/32, or PCLK/64) with the NMIFLTC.NFCLKSEL[1:0] bits and set the NMIFLTE.NFLTEN bit to 1 (digital filter enabled).
Figure 14.7 shows an example of digital filter operation.

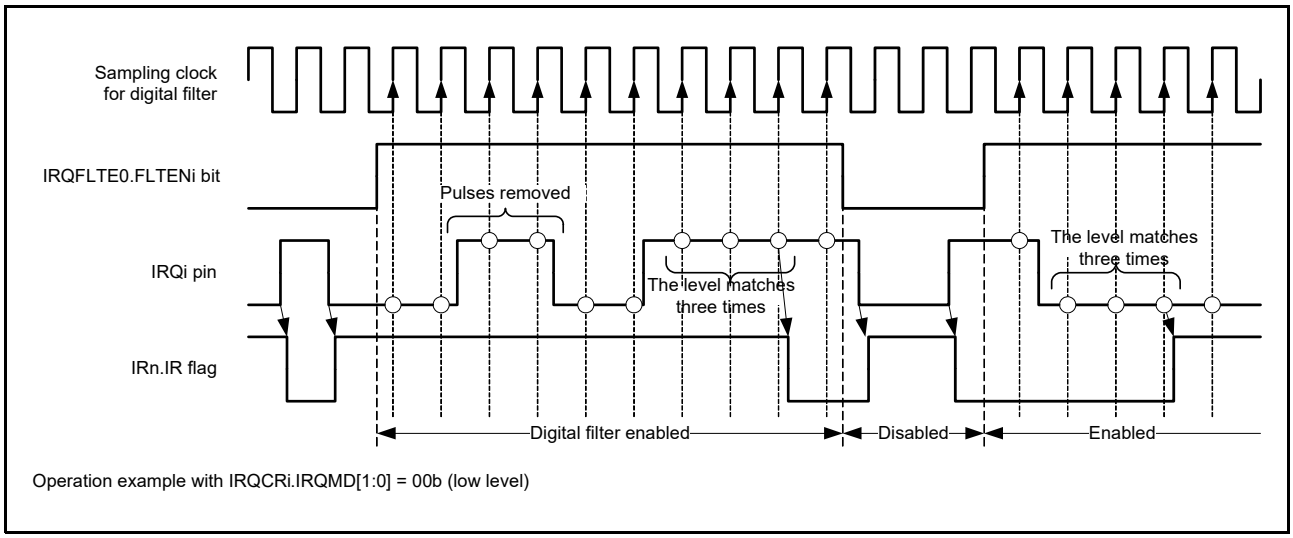

Figure 14.7 Digital Filter Operation Example

Before software standby mode is entered, set the IRQFLTE0.FLTENi and NMIFLTE.NFLTEN bits to 0 (digital filter disabled). To use the digital filter again after return from software standby mode, set the IRQFLTE0.FLTENi or NMIFLTE.NFLTEN bit to 1 (digital filter enabled).

14.4.8 External Pin Interrupts

The procedure for using the signal on an external pin as an interrupt is as follows.

1. Clear the IERm.IENj bit (m = 02h to 1Fh; j = 0 to 7) to 0 (interrupt request disabled).
2. Clear the IRQFLTE0.FLTENi bit (i = 0 to 7) to 0 (digital filter disabled).*1
3. Set the digital filter sampling clock with the IRQFLTC0.FCLKSELi[1:0] bits.*1
4. Make or confirm the I/O port settings.
5. Set the method of detection for the interrupt in the IRQCRi.IRQMD[1:0] bits.
6. Clear the corresponding IRn.IR flag (n = interrupt vector number) to 0 (if edge detection is in use).
7. Set the IRQFLTE0.FLTENi bit to 1 (digital filter enabled).*1
8. If the interrupt is to be used for DMAC trigger, set the DMRSRm.DMRS[7:0] bits. If the interrupt is to be used for DTC trigger, set the DTCERn.DTCE bit. The interrupt will be a CPU interrupt if neither of these settings is made.
9. Set the IERm.IENj bit to 1 (interrupt request enabled).

Note 1. To use the digital filter function, settings must be made beforehand.

14.5 Non-maskable Interrupt Operation

There are six types of non-maskable interrupt: the NMI pin interrupt, oscillation stop detection interrupt, IWDT underflow/refresh error, voltage monitoring 1 interrupt, and voltage monitoring 2 interrupt. Non-maskable interrupts are only usable as interrupts for the CPU; that is, they are not capable of DTC or DMAC trigger. Non-maskable interrupts take precedence over all interrupts, including the fast interrupt.
Non-maskable interrupt requests are accepted regardless of the states of the I (interrupt enable) bit and IPL[3:0] (processor interrupt priority level) bits in the PSW of the CPU. The current states of the non-maskable interrupts can be checked in the non-maskable interrupt status register (NMISR).
Confirm that all bits in the NMISR have returned to 0 from within the handler for the non-maskable interrupt, before ending the handler.
Non-maskable interrupts are disabled by default. If a system is to use non-maskable interrupts, the following procedure must be followed at the beginning of program processing.

Non-maskable interrupt usage procedure:

1. Set the stack pointer (SP).
2. To use the NMI pin, clear the NMIFLTE.NFLTEN bit to 0 (digital filter disabled).*1
3. To use the NMI pin, set the digital filter sampling clock with the NMIFLTC.NFCLKSEL[1:0] bits.*1
4. To use the NMI pin, set the NMI pin detection sense with the NMICR.NMIMD bit.
5. To use the NMI pin, write 1 to the NMICLR.NMICLR bit to clear the NMISR.NMIST flag to 0.
6. To use the NMI pin, set the NMIFLTE.NFLTEN bit to 1 (digital filter enabled).*1
7. Enable the non-maskable interrupt by writing 1 to the corresponding bit in the non-maskable interrupt enable register (NMIER).

Note 1. To use the digital filter function, settings must be made beforehand.

After 1 is written to the NMIER register, subsequent write access to the NMIEN bit in NMIER is ignored. The NMI interrupt cannot be disabled. It can be disabled only by a reset.
For the flow of non-maskable interrupt processing, see section 13, Exception Handling.
Writing 1 to the NMICLR.NMICLR bit sets the NMI status flag (NMISR.NMIST) to 0.
Writing 1 to the NMICLR.OSTCLR bit sets the oscillation stop detection interrupt status flag (NMISR.OSTST) to 0.
Writing 1 to the NMICLR.IWDTCLR bit sets the IWDT underflow/refresh error status flag (NMISR.IWDTST) to 0.
Writing 1 to the NMICLR.LVD1CLR bit sets the voltage monitoring 1 interrupt status flag (NMISR.LVD1ST) to 0.
Writing 1 to the NMICLR.LVD2CLR bit sets the voltage monitoring 2 interrupt status flag (NMISR.LVD2ST) to 0.

14.6 Return from Low Power Consumption States

Interrupts can be used to return from sleep mode, deep sleep mode, or software standby mode.
Refer to section 11, Low Power Consumption for details. This section describes the procedure to set an interrupt source for returning from each low power consumption mode.

14.6.1 Return from Sleep Mode or Deep Sleep Mode

All non-maskable interrupts and all interrupts can be used to return from sleep mode and deep sleep mode. The following conditions must be satisfied.

(1) Non-maskable interrupts

- Generation of the interrupt that is used for return is enabled in the NMIER register.

(2) Interrupts

- The CPU is selected as the interrupt request destination.
- The interrupt request is enabled by the IERm.IENj bit (m = 02h to 1Fh; j = 0 to 7).
- The priority level is higher than the PSW.IPL[3:0] bit value in the CPU.

14.6.2 Return from Software Standby Mode

Non-maskable interrupts and interrupts that have a "✓" in the SSBY return column in Table 14.3, Interrupt Vector Table can be used to return from software standby mode. The conditions below must be satisfied.

(1) Non-maskable interrupts

- Generation of the interrupt that is used for return is enabled in the NMIER register.
- When using the NMI pin interrupt, the digital filter is disabled.

(2) Interrupts

- The interrupt source can be used to return from software standby mode.
- The CPU is selected as the interrupt request destination.
- The interrupt request is enabled by the IERm.IENj bit (m = 02h to 1Fh; j = 0 to 7).
- The priority level is higher than the PSW.IPL[3:0] bit value in the CPU.
  When using the fast interrupt, set not only the FIR register but also the corresponding IPRn.IPR[3:0] bits (n = interrupt vector number). Set the IPRn.IPR[3:0] bits to a higher level than the PSW.IPL[3:0] bit value in the CPU.
- When using the external pin interrupt, the digital filter of the IRQi pin used is disabled.

Refer to section 14.4.7, Digital Filter for details on the procedure to set the digital filter.

14.7 Usage Note

14.7.1 Note on WAIT Instruction Used with Non-Maskable Interrupt

Before executing the WAIT instruction, check to see that all the status flags in NMISR are 0.

15. Buses

15.1 Overview

Table 15.1 lists the bus specifications, Figure 15.1 shows the bus configuration, and Table 15.2 lists the addresses assigned for each bus.

Table 15.1 Bus Specifications

Bus Type		Description
CPU bus	Instruction bus	• Connected to the CPU (for instructions) • Connected to on-chip memory (RAM, ROM) • Operates in synchronization with the system clock (ICLK)
	Operand bus	• Connected to the CPU (for operands) • Connected to on-chip memory (RAM, ROM) • Operates in synchronization with the system clock (ICLK)
Memory bus	Memory bus 1	• Connected to RAM
	Memory bus 2	• Connected to ROM
Internal main bus	Internal main bus 1	• Connected to the CPU • Operates in synchronization with the system clock (ICLK)
	Internal main bus 2	• Connected to the DMAC and DTC • Connected to on-chip memory (RAM, ROM) • Operates in synchronization with the system clock (ICLK)
Internal peripheral bus	Internal peripheral bus 1	• Connected to peripheral modules (DTC, DMAC, interrupt controller, and bus error monitoring section) • Operates in synchronization with the system clock (ICLK)
	Internal peripheral bus 2	• Connected to peripheral modules (modules other than those connected to internal peripheral buses 1, 3, and 4) • Operates in synchronization with the peripheral-module clock (PCLKB)
	Internal peripheral bus 3	• Connected to peripheral modules (RSCAN, DSAD0, DSAD1, AFE) • Operates in synchronization with the peripheral-module clock (PCLKB)
	Internal peripheral bus 4	• Connected to peripheral modules (MTU2) • Operates in synchronization with the peripheral-module clock (PCLKA)
	Internal peripheral bus 6	• Connected to the flash control module and E2 DataFlash • Operates in synchronization with the FlashIF clock (FCLK)

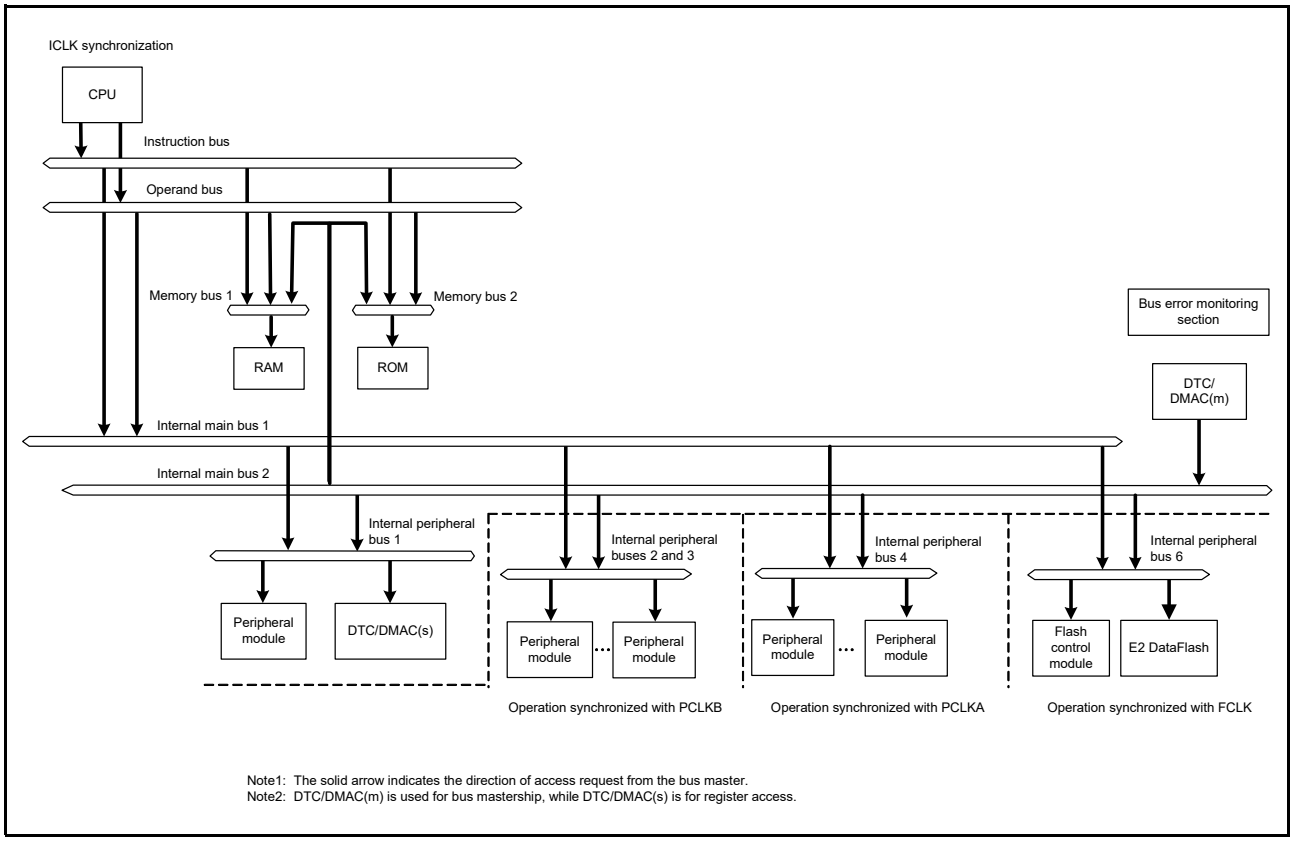

Figure 15.1 Bus Configuration

Table 15.2 Addresses Assigned for Each Bus

Address	Bus	Area
0000 0000h to 0007 FFFFh	Memory bus 1	RAM
0008 0000h to 0008 7FFFh	Internal peripheral bus 1	Peripheral I/O registers
0008 8000h to 0009 FFFFh	Internal peripheral bus 2	
000A 0000h to 000B FFFFh	Internal peripheral bus 3	
000C 0000h to 000D FFFFh	Internal peripheral bus 4	
000E 0000h to 000F FFFFh	Reserved area	Reserved area
0010 0000h to 00FF FFFFh	Internal peripheral bus 6	Flash control module and E2 DataFlash
0100 0000h to 7FFF FFFFh	Reserved area	Reserved area
8000 0000h to FFFF FFFFh	Memory bus 2	ROM (for reading only)

15.2 Description of Buses

15.2.1 CPU Buses

The CPU buses consist of the instruction and operand buses, which are connected to internal main bus 1. As the names suggest, the instruction bus is used to fetch instructions for the CPU, while the operand bus is used for operand access. The instruction bus is 64 bits while the operand bus is 32 bits.
Connection of the instruction and operand buses to RAM and ROM provides the CPU with direct access to these areas, i.e. access is not via internal main bus 1. However, only reading is possible in direct access to ROM by the CPU; programming and erasure are handled via an internal peripheral bus.
Bus requests for instruction fetching and operand access are arbitrated through internal main bus 1. The order of priority is operand access then instruction fetching.
If instruction fetching and operand access are requested for different buses (memory bus 1, memory bus 2, and internal main bus 1), the bus-access operations can proceed simultaneously. For example, parallel access to ROM and RAM is possible.

15.2.2 Memory Buses

The memory buses consist of memory bus 1 and memory bus 2. RAM is connected to memory bus 1 and ROM is connected to memory bus 2. The memory buses are 64 bits. Requests for bus mastership from the CPU buses (instruction fetching and operand) and internal main bus 2 are arbitrated through memory buses 1 and 2.
The priority order of the buses can be set using the memory bus 1 (RAM) priority control bits (BPRA[1:0]) and memory bus 2 (ROM) priority control bits (BPRO[1:0]) in the bus priority control register (BUSPRI) for the corresponding memory buses. When the priority order is fixed, internal main bus 2 has priority over the CPU bus (operand over instruction fetching). When the priority order is toggled, a bus has a lower priority when the request of that bus is accepted.

15.2.3 Internal Main Buses

The internal main buses consist of a bus for use by the CPU (internal main bus 1) and a bus for use by the other bus-master modules, i.e. the DTC and DMAC (internal main bus 2).
Bus requests for instruction fetching and operand access are arbitrated through internal main bus 1. The order of priority is operand access then instruction fetching.
Requests for bus mastership from the DTC and DMAC are arbitrated by internal main bus 2. The priority order is the DMAC and then DTC as listed in Table 15.3.
Between the DTC and DMAC, only the one that accepted the activation request issues the bus mastership request. The priority order of activation requests between the DTC and DMAC is DMAC0, DMAC1, DMAC2, DMAC3, and then DTC, regardless of the BUSPRI setting.
If the CPU and another bus master are requesting access to different buses (on-chip memory, internal peripheral buses 1 to 4, and 6), the respective bus-access operations can proceed simultaneously.
However, when the CPU executes the XCHG instruction, requests for bus access from masters other than the CPU are not accepted until data transfer for the XCHG instruction is completed regardless of the bus priority control register (BUSPRI) setting. Furthermore, requests for bus access from masters other than the DTC are not accepted during reading and writing-back of transfer control information for the DTC.

Table 15.3 Order of Priority for Bus Masters

Priority	Internal main buses	Bus Master
High	2	DMAC
↑		DTC
Low	1	CPU

Note: The above applies when the priority order of the buses is fixed.
The priority order of internal main bus 1 and another bus (internal main bus 2) can be toggled by the bus priority control register (BUSPRI) (round-robin method).

15.2.4 Internal Peripheral Buses

Connection of peripheral modules to the internal peripheral buses is as described in Table 15.4.

Table 15.4 Connection of Peripheral Modules to the Internal Peripheral Buses

Type of Bus	Peripheral Modules
Internal peripheral bus 1	DTC, DMAC, interrupt controller, and bus error monitoring section
Internal peripheral bus 2	Peripheral modules other than those connected to internal peripheral buses 1, 3, and 4
Internal peripheral bus 3	RSCAN, DSAD0, DSAD1, and AFE
Internal peripheral bus 4	MTU2
Internal peripheral bus 6	Flash control module and E2 DataFlash

Requests for bus mastership from the CPU (internal main bus 1) and other bus masters (internal main bus 2) are arbitrated through internal peripheral buses 1 to 4, and 6.
The priority order of two internal main buses can be set using the bus priority control register (BUSPRI). The priority order can be set with the internal peripheral bus 1 priority control bits (BUSPRI.BPIB[1:0]), internal peripheral bus 2 and 3 priority control bits (BUSPRI.BPGB[1:0]), internal peripheral bus 4 priority control bits (BUSPRI.BPHB[1:0]), and internal peripheral bus 6 priority control bits (BUSPRI.BPFB[1:0]) for the corresponding internal peripheral buses.
When the priority order is fixed, internal main bus 2 has priority over internal main bus 1. When the priority order is toggled, a bus has a lower priority when the request of that bus is accepted (round-robin method).
The order of accepting requests may change depending on the BUSPRI setting (Refer to Figure 15.2).

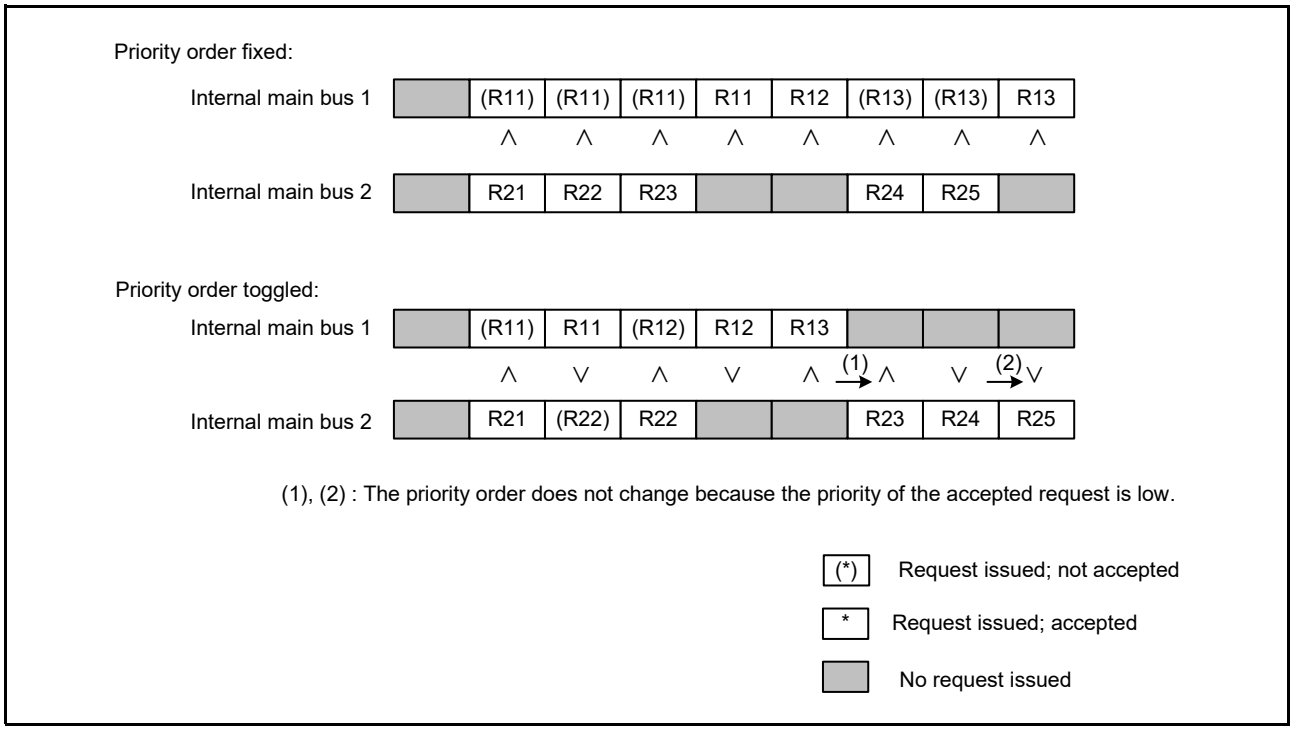

Figure 15.2 Priority Order between Internal Peripheral Bus Accesses

15.2.5 Write Buffer Function (Internal Peripheral Bus)

The internal peripheral bus has the write buffer function, which allows the next round of bus access to start, before the current write access is completed, in write access. However, if the following round of bus access is from the same bus master but to the different internal peripheral bus, it is suspended until the bus operations already in progress are completed. When read access to the internal memory is scheduled after the write access to the internal peripheral bus from the CPU, the following round of bus access can be started before the current bus operation is completed and thus the order of accesses may be changed (Refer to Figure 15.3).

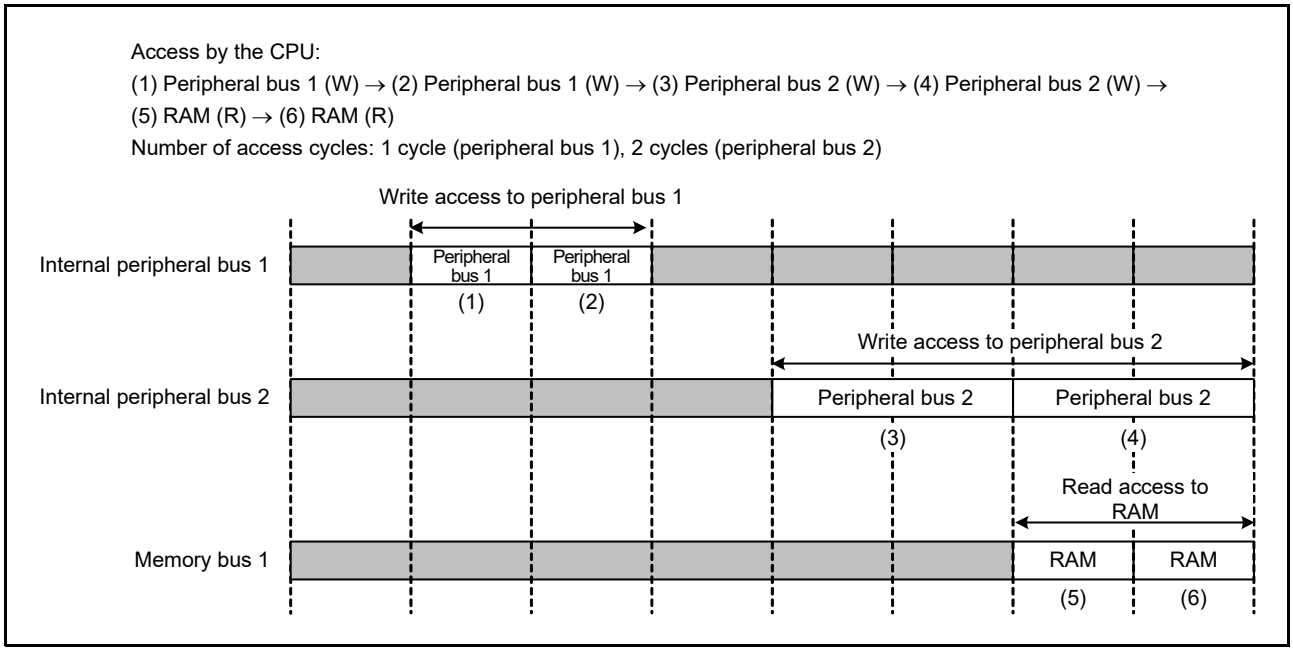

Figure 15.3 Write Buffer Function

15.2.6 Parallel Operation

Parallel operation is possible when different bus-master modules are requesting access to different slave modules. For example, the DTC is able to handle transfer between peripheral buses while the CPU is fetching an instruction from ROM and an operand from RAM.

An example of parallel operations is shown in Figure 15.4. In this example, the CPU is able to employ the instruction and operand buses for simultaneous access to ROM and RAM, respectively. Furthermore, the DTC simultaneously employs internal main bus 2 for access to a peripheral bus during access to RAM and ROM by the CPU.

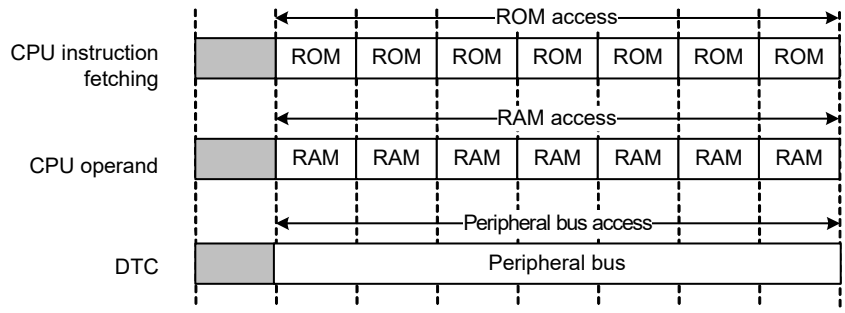

Figure 15.4 Example of Parallel Operations

15.2.7 Restrictions

(1) Prohibition of Access that Spans Areas of Address Space

Single access that spans two areas of the address space is prohibited, and operation of such an access is not guaranteed. Setting must be made so that two areas are not accessed at the same time by a single word or longword access.

(2) Restrictions in Relation to RMPA and String-Manipulation Instructions

The allocation of data to be handled by RMPA or string-manipulation instructions to I/O registers is prohibited, and operation is not guaranteed if this restriction is not observed.

15.3 Register Descriptions

15.3.1 Bus Error Status Clear Register (BERCLR)

Address(es): 0008 1300h

	b7	b6	b5	b4	b3	b2	b1	b0
	—	—	—	—	—	—	—	STSCLR
Value after reset:	0	0	0	0	0	0	0	0

Bit	Symbol	Bit Name	Description	R/W
b0	STSCLR	Status Clear	0: Invalid 1: Bus error status register cleared	(W)*1
b7 to b1	—	Reserved	These bits are read as 0. The write value should be 0.	R/W

Note 1. Only writing 1 is effective; i.e. writing 0 has no effect.

STSCLR Bit (Status Clear)

Writing 1 to this bit clears the bus error status registers 1 and 2 (BERSR1 and BERSR2).
Writing 0 has no effect. It is read as 0.

15.3.2 Bus Error Monitoring Enable Register (BEREN)

Address(es): 0008 1304h

	b7	b6	b5	b4	b3	b2	b1	b0
	—	—	—	—	—	—	TOEN	IGAEN
Value after reset:	0	0	0	0	0	0	0	0

Bit	Symbol	Bit Name	Description	R/W
b0	IGAEN	Illegal Address Access Detection Enable	0: Illegal address access detection is disabled. 1: Illegal address access detection is enabled.	R/W
b1	TOEN	Timeout Detection Enable*1, *2	0: Bus timeout detection is disabled. 1: Bus timeout detection is enabled.	R/W
b7 to b2	—	Reserved	These bits are read as 0. The write value should be 0.	R/W

Note 1. When detection is disabled (the TOEN bit is cleared to 0), bus access can cause the bus to freeze.
Note 2. Do not clear the TOEN bit to 0 (bus timeout detection disabled) while timeout errors are being detected.

15.3.3 Bus Error Status Register 1 (BERSR1)

Address(es): 0008 1308h

	b7	b6	b5	b4	b3	b2	b1	b0
	—	MST[2:0]			—	—	TO	IA
Value after reset:	0	0	0	0	0	0	0	0

Bit	Symbol	Bit Name	Description	R/W
b0	IA	Illegal Address Access	0: Illegal address access not made 1: Illegal address access made	R
b1	TO	Timeout	0: Timeout not generated 1: Timeout generated	R
b3, b2	—	Reserved	These bits are read as 0. Writing to these bits has no effect.	R
b6 to b4	MST[2:0]	Bus Master Code	b6 b4 0 0 0: CPU 0 0 1: Reserved 0 1 0: Reserved 0 1 1: DTC/DMAC 1 0 0: Reserved 1 0 1: Reserved 1 1 0: Reserved 1 1 1: Reserved	R
b7	—	Reserved	This bit is read as 0. Writing to this bit has no effect.	R

MST[2:0] Bits (Bus Master Code)

These bits indicate the bus master that accessed a bus when a bus error occurred.

15.3.4 Bus Error Status Register 2 (BERSR2)

Address(es): 0008 130Ah

	b15	b14	b13	b12	b11	b10	b9	b8	b7	b6	b5	b4	b3	b2	b1	b0
	ADDR[12:0]													—	—	—
Value after reset:	0	0	0	0	0	0	0	0	0	0	0	0	0	0	0	0

Bit	Symbol	Bit Name	Description	R/W
b2 to b0	—	Reserved	These bits are read as 0. Writing to these bits has no effect.	R
b15 to b3	ADDR[12:0]	Bus Error Occurrence Address	The upper 13 bits of an address that was accessed when a bus error occurred (in units of 512 Kbytes).	R

15.3.5 Bus Priority Control Register (BUSPRI)

Address(es): 0008 1310h

	b15	b14	b13	b12	b11	b10	b9	b8	b7	b6	b5	b4	b3	b2	b1	b0
	—	—	—	—	BPFB[1:0]		BPHB[1:0]		BPGB[1:0]		BPIB[1:0]		BPRO[1:0]		BPRA[1:0]	
Value after reset:	0	0	0	0	0	0	0	0	0	0	0	0	0	0	0	0

Bit	Symbol	Bit Name	Description	R/W
b1, b0	BPRA[1:0]	Memory Bus 1 (RAM) Priority Control	b1 b0 0 0: The order of priority is fixed. 0 1: The order of priority is toggled. 1 0: Setting prohibited 1 1: Setting prohibited	R/(W) *1
b3, b2	BPRO[1:0]	Memory Bus 2 (ROM) Priority Control	b3 b2 0 0: The order of priority is fixed. 0 1: The order of priority is toggled. 1 0: Setting prohibited 1 1: Setting prohibited	R/(W) *1
b5, b4	BPIB[1:0]	Internal Peripheral Bus 1 Priority Control	b5 b4 0 0: The order of priority is fixed. 0 1: The order of priority is toggled. 1 0: Setting prohibited 1 1: Setting prohibited	R/(W) *1
b7, b6	BPGB[1:0]	Internal Peripheral Bus 2 and 3 Priority Control	b7 b6 0 0: The order of priority is fixed. 0 1: The order of priority is toggled. 1 0: Setting prohibited 1 1: Setting prohibited	R/(W) *1
b9, b8	BPHB[1:0]	Internal Peripheral Bus 4 Priority Control	b9 b8 0 0: The order of priority is fixed. 0 1: The order of priority is toggled. 1 0: Setting prohibited 1 1: Setting prohibited	R/(W) *1
b11, b10	BPFB[1:0]	Internal Peripheral Bus 6 Priority Control	b11 b10 0 0: The order of priority is fixed. 0 1: The order of priority is toggled. 1 0: Setting prohibited 1 1: Setting prohibited	R/(W) *1
b15 to b12	—	Reserved	These bits are read as 0. The write value should be 0.	R/W

Note 1. These bits can be written to only once while the DTC and DMAC are written to more than one time, the operation is not guaranteed.

BPRA[1:0] Bits (Memory Bus 1 (RAM) Priority Control)

These bits specify the priority order for memory bus 1 (RAM).

When the priority order is fixed, internal main bus 2 has priority over internal main bus 1.

When the priority order is toggled, a bus has a lower priority when the request of that bus is accepted.

BPRO[1:0] Bits (Memory Bus 2 (ROM) Priority Control)

These bits specify the priority order for memory bus 2 (ROM).

When the priority order is fixed, internal main bus 2 has priority over internal main bus 1.

When the priority order is toggled, a bus has a lower priority when the request of that bus is accepted.

BPIB[1:0] Bits (Internal Peripheral Bus 1 Priority Control)

These bits specify the priority order for internal peripheral bus 1.

When the priority order is fixed, internal main bus 2 has priority over internal main bus 1.

When the priority order is toggled, a bus has a lower priority when the request of that bus is accepted.

BPGB[1:0] Bits (Internal Peripheral Bus 2 and 3 Priority Control)

These bits specify the priority order for internal peripheral buses 2 and 3.
When the priority order is fixed, internal main bus 2 has priority over internal main bus 1.
When the priority order is toggled, a bus has a lower priority when the request of that bus is accepted.

BPHB[1:0] Bits (Internal Peripheral Bus 4 Priority Control)

These bits specify the priority order for internal peripheral bus 4.
When the priority order is fixed, internal main bus 2 has priority over internal main bus 1.
When the priority order is toggled, a bus has a lower priority when the request of that bus is accepted.

BPFB[1:0] Bits (Internal Peripheral Bus 6 Priority Control)

These bits specify the priority order for internal peripheral bus 6.
When the priority order is fixed, internal main bus 2 has priority over internal main bus 1.
When the priority order is toggled, a bus has a lower priority when the request of that bus is accepted.

15.4 Bus Error Monitoring Section

The bus error monitoring section monitors the individual areas for bus errors, and when a bus error occurs, the error is indicated to the bus master.

15.4.1 Types of Bus Error

There are two types of bus error: illegal address access and timeout.
Illegal address access is the detection of illegal access to an area, and time-out is the detection of a bus-access operation not being completed within 768 cycles.

15.4.1.1 Illegal Address Access

When the illegal address access detection enable bit (IGAEN) in the bus error monitoring enable register (BEREN) is set to 1, access of the following types leads to illegal address access errors.

- Table 15.5 lists the address ranges to which access will, may, or will not lead to illegal address access errors.

15.4.1.2 Timeout

When the timeout detection enable bit (TOEN) in the bus error monitoring enable register (BEREN) is set to 1, bus access that is not completed within 768 cycles leads to a timeout error.

- Internal peripheral buses (2 and 3): Bus access is not completed within 768 peripheral module clock (PCLKB) cycles from the start of the access. In this MCU, a timeout error does not occur.
  Once a timeout error occurs, accesses from the bus master are rejected for 256 PCLKB cycles.
- Internal peripheral buses (4): Bus access is not completed within 768 peripheral module clock (PCLKA) cycles from the start of the access.
  Once a timeout error occurs, accesses from the bus master are rejected for 256 PCLKA cycles.
- Internal peripheral bus (6): Bus access is not completed within 768 FlashIF clock (FCLK) cycles from the start of the access.
  Once a timeout error occurs, accesses from the bus master are rejected for 256 FCLK cycles. In this MCU, a timeout error does not occur.

15.4.2 Operations When a Bus Error Occurs

When a bus error occurs, the error is indicated to the CPU. Operation is not guaranteed when a bus error occurs.

- Bus error indication to the CPU
  An interrupt is generated. The IERn register in the ICU can specify whether to generate an interrupt in the case of a bus error.

15.4.3 Conditions Leading to Bus Errors

Table 15.5 lists the types of bus errors for each area in the respective address space.
If an illegal address access error or timeout is detected when no bus error has occurred (bus error status register n (BERSRn; n = 1 or 2) is cleared), the detected error is reflected on the BERSRn. Once a bus error occurs, no subsequent bus errors are reflected on the register unless the register is cleared.
If bus errors are simultaneously caused by two or more bus masters, error information of only one bus master is reflected. Once a bus error occurs, the status is retained until BERSRn is cleared.

Table 15.5 Types of Bus Errors

Address	Type of Area	Type of Error
		Illegal Address Access
0000 0000h to 0007 FFFFh	Memory bus 1	—
0008 0000h to 0008 7FFFh	Internal peripheral bus 1	—
0008 8000h to 0009 FFFFh	Internal peripheral bus 2	Δ
000A 0000h to 000B FFFFh	Internal peripheral bus 3	Δ
000C 0000h to 000D FFFFh	Internal peripheral bus 4	Δ
000E 0000h to 000F FFFFh	Reserved area	—
0010 0000h to 00FF FFFFh	Internal peripheral bus 6	Δ
0100 0000h to 0FFF FFFFh	Reserved area	—
1000 0000h to 7FFF FFFFh	Reserved area	✓
8000 0000h to FFFF FFFFh	Memory bus 2	—

—: A bus error does not result.
Δ: A bus error may or may not result.
✓: A bus error results.
Note: The capacity of the RAM and ROM differs depending on the product. For details, see section 37, RAM, section 38, Flash Memory (FLASH).

15.5 Interrupt

15.5.1 Interrupt Source

An illegal address access error or detection of a timeout leads to a bus error signal for the interrupt controller.

Table 15.6 Interrupt Source

Name	Interrupt Source	DTC Activation	DMAC Activation
BUSERR	Illegal address access error or timeout	Not possible	Not possible

16. Memory-Protection Unit (MPU)

16.1 Overview

The RXv2 CPU incorporates a memory-protection unit that checks the addresses of CPU access to the overall address space (0000 0000h to FFFF FFFFh).
Access-control information can be set for up to eight regions, and permission for access to each region is in accord with this information. The default response to the detection of access to a region where permission has not been set is the generation of a memory-protection error.
The supported access-control information for the individual regions consists of permission to read, permission to write, and permission to execute. This access-control information is effective when the processor mode of the CPU is user mode. Memory protection is not applied when the CPU is in supervisor mode.
Table 16.1 lists the specifications of the memory-protection unit, and Figure 16.1 shows a block diagram of the memory-protection unit.

Table 16.1 Specifications of Memory Protection

Specifictaions	Description
Region to be covered by memory protection and processor mode	0000 0000h to FFFF FFFFh (in user mode) No memory protection in supervisor mode
Number of regions	8
Page size (smallest unit of protection)	16 bytes
Specifying addresses of individual regions	Setting the page numbers where regions start and end
Setting to make memory protection effective or ineffective in individual regions	A V (valid) bit in each region-n end page number register (REPAGEn) makes the settings effective or ineffective for the corresponding region (n = 0 to 7).
Access-control information settings for individual regions	Instruction execution: Permission to execute Operand access: Permission to read, permission to write
Start of memory-protection operations	After the memory-protection unit has been enabled, access monitoring starting up with the transition to user mode.
Memory-protection error processing	Generation of access exceptions
Addresses where memory-protection errors are generated	Address in instruction execution: The PC value is preserved on the stack. Address in operand access: The address is stored in the data memory-protection error address register (MPDEA).
Determining the reasons for memory-protection errors	The memory-protection error status register (MPESTS) holds indicators of the reason.
Background region setting	Access-control information can be set for the background region (the whole address space).
Processing where regions overlap	The access-control information for access to an overlap between regions is the logical OR of the attributes for the given regions, and permission is given priority.

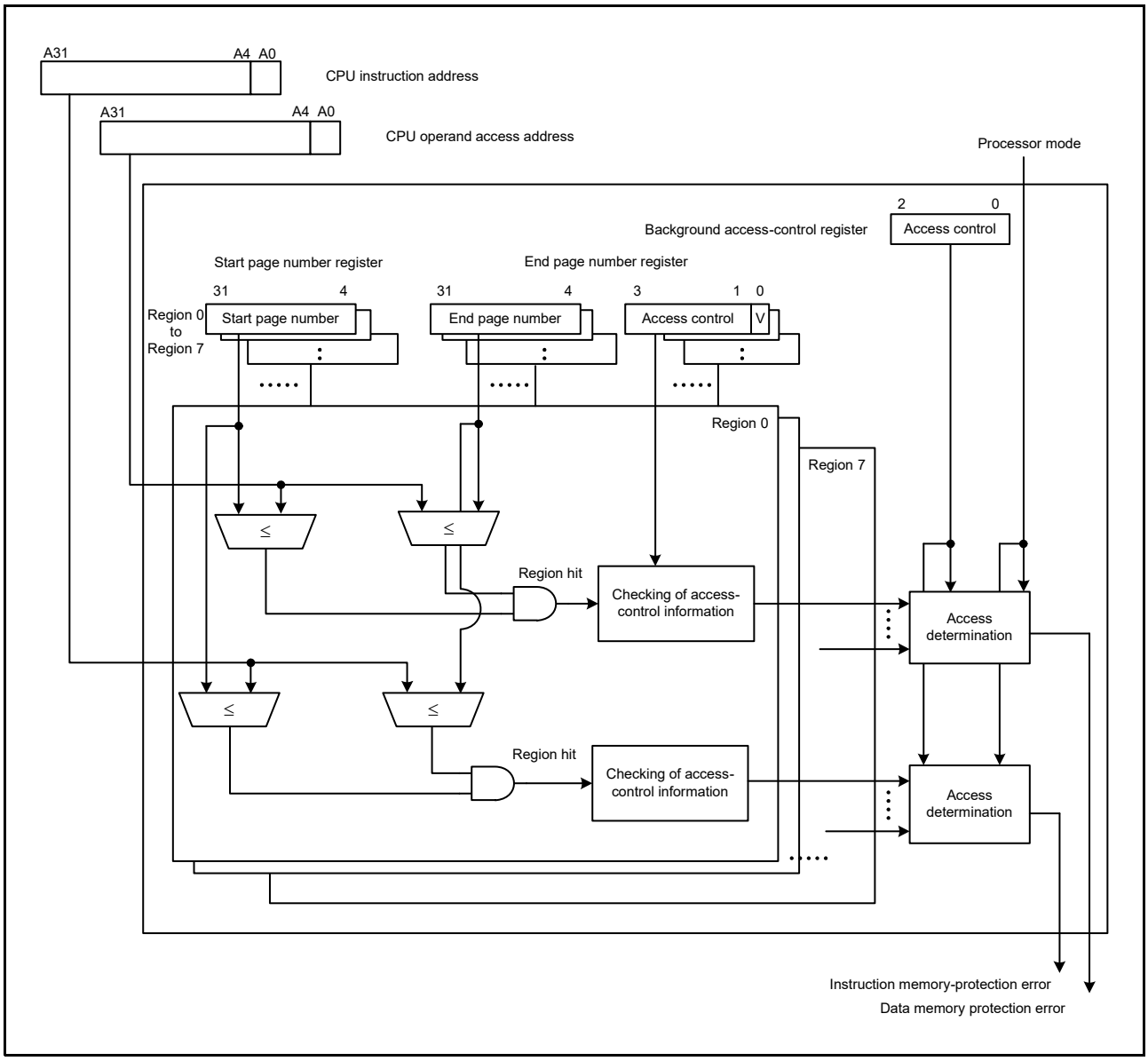

Figure 16.1 Block Diagram of the Memory-Protection Unit

16.1.1 Types of Access Control

There are three types of access control information: permission for instruction execution, permission to read operands, and permission to write operands. Violations of these types of access control are only detected when programs are running in user mode. Violations are not detected when programs are running in supervisor mode.

16.1.2 Regions for Access Control

Up to eight regions for access control are definable. Settings of the range of memory for each access-control region are made in the corresponding region-n start page number register (RSPAGEn) and region-n end page number register (REPAGEn), where n = 0 to 7.
The minimum unit for control of access is the “page”, by which the address space is divided into 16-byte units. The 28 higher-order bits ([31:4]) of the address [31:0] bits correspond to the page number.
The REPAGEn register specifies the access-control information for each area and whether the area is enabled or not.

16.1.3 Background Region

“Background region” refers to the whole address space (0000 0000h to FFFF FFFFh). Access-control information for the background region is set in the background-region access-control register (MPBAC). In contrast to the access-control information for the eight individual regions, protection information for the background region is effective as long as memory protection is enabled (the MPEN bit in the MPEN register is 1).

16.1.4 Overlap between Regions

In cases of overlap between multiple regions, the access-control information becomes the logical OR of the access-control bits for the overlapping regions (including the background region), with permission given priority.

16.1.5 Instructions and Data that Span Regions

Operations in response to the detection of memory-protection errors when instructions or data span regions for which different access-control settings have been made are undefined. Ensure that instructions and data do not span regions for which different access-control settings have been made.

16.2 Register Descriptions

16.2.1 Region-n Start Page Number Register (RSPAGEn) (n = 0 to 7)

Address(es): RSPAGE0 0008 6400h, RSPAGE1 0008 6408h, RSPAGE2 0008 6410h, RSPAGE3 0008 6418h, RSPAGE4 0008 6420h, RSPAGE5 0008 6428h, RSPAGE6 0008 6430h, RSPAGE7 0008 6438h

	b31	b30	b29	b28	b27	b26	b25	b24	b23	b22	b21	b20	b19	b18	b17	b16
	RSPN[27:0]															
Value after reset:	x	x	x	x	x	x	x	x	x	x	x	x	x	x	x	x

	b15	b14	b13	b12	b11	b10	b9	b8	b7	b6	b5	b4	b3	b2	b1	b0
	RSPN[27:0]												—	—	—	—
Value after reset:	x	x	x	x	x	x	x	x	x	x	x	x	0	0	0	0

x: Undefined

Bit	Symbol	Bit Name	Description	R/W
b3 to b0	—	Reserved	The read value is 0. The write value should always be 0.	R/W
b31 to b4	RSPN[27:0]	Region-Start Page Number	Page number where the region starts, for use in region determination	R/W

RSPN[27:0] Bits (Region-Start Page Number)

These bits specify the page number where the region starts.

16.2.2 Region-n End Page Number Register (REPAGEn) (n = 0 to 7)

Address(es): REPAGE0 0008 6404h, REPAGE1 0008 640Ch, REPAGE2 0008 6414h, REPAGE3 0008 641Ch, REPAGE4 0008 6424h, REPAGE5 0008 642Ch, REPAGE6 0008 6434h, REPAGE7 0008 643Ch

	b31	b30	b29	b28	b27	b26	b25	b24	b23	b22	b21	b20	b19	b18	b17	b16
	REPN[27:0]															
Value after reset:	x	x	x	x	x	x	x	x	x	x	x	x	x	x	x	x

	b15	b14	b13	b12	b11	b10	b9	b8	b7	b6	b5	b4	b3	b2	b1	b0
	REPN[27:0]												UAC[2:0]			V
Value after reset:	x	x	x	x	x	x	x	x	x	x	x	x	0	0	0	0

x: Undefined

Bit	Symbol	Bit Name	Description	R/W
b0	V	Valid Bit	0: Region setting invalid 1: Region setting valid	R/W
b3 to b1	UAC[2:0]	Access Control Bits in User Mode	b3 0: Reading prohibited 1: Reading permitted b2 0: Writing prohibited 1: Writing permitted b1 0: Execution prohibited 1: Execution permitted	R/W
b31 to b4	REPN[27:0]	Region-End Page Number	Page number where the region ends, for use in region determination	R/W

V Bit (Valid Bit)

This bit enables or disables the settings for the corresponding region.

This bit is cleared to 0 when the region invalidation operation register (MPOPI) invalidates all access-controlled areas.

UAC[2:0] Bits (Access Control Bits in User Mode)

These bits specify the access control in user mode.

REPN[27:0] Bits (Region-End Page Number)

These bits specify the page number where the region ends.

Specify a value that is greater than or equal to the page number where the corresponding region starts. The page specified by the region-end page number is part of the target region for memory protection.

16.2.3 Memory-Protection Enable Register (MPEN)

Address(es): 0008 6500h

	b31	b30	b29	b28	b27	b26	b25	b24	b23	b22	b21	b20	b19	b18	b17	b16
	—	—	—	—	—	—	—	—	—	—	—	—	—	—	—	—
Value after reset:	0	0	0	0	0	0	0	0	0	0	0	0	0	0	0	0

	b15	b14	b13	b12	b11	b10	b9	b8	b7	b6	b5	b4	b3	b2	b1	b0
	—	—	—	—	—	—	—	—	—	—	—	—	—	—	—	MPEN
Value after reset:	0	0	0	0	0	0	0	0	0	0	0	0	0	0	0	0

Bit	Symbol	Bit Name	Description	R/W
b0	MPEN	Memory-Protection Enable	1: The memory protection is enabled. 0: The memory protection is disabled.	R/W
b31 to b1	—	Reserved	The read value is 0. The write value should always be 0	R/W

MPEN Bit (Memory-Protection Enable)

This bit enables or disables the memory protection.

After 1 has been written to this bit, address checking for memory protection by the CPU starts on the execution of a branch instruction (RTE or RTFI) that shifts operation to the user mode.

16.2.4 Background Access Control Register (MPBAC)

Address(es): 0008 6504h

	b31	b30	b29	b28	b27	b26	b25	b24	b23	b22	b21	b20	b19	b18	b17	b16
	—	—	—	—	—	—	—	—	—	—	—	—	—	—	—	—
Value after reset:	0	0	0	0	0	0	0	0	0	0	0	0	0	0	0	0

	b15	b14	b13	b12	b11	b10	b9	b8	b7	b6	b5	b4	b3	b2	b1	b0
	—	—	—	—	—	—	—	—	—	—	—	—	UBAC[2:0]			—
Value after reset:	0	0	0	0	0	0	0	0	0	0	0	0	0	0	0	0

Bit	Symbol	Bit Name	Description	R/W
b0	—	Reserved	The read value is 0. The write value should always be 0.	R/W
b3 to b1	UBAC[2:0]	Background Access Control Bits in User Mode	b3 0: Reading prohibited 1: Reading permitted b2 0: Writing prohibited 1: Writing permitted b1 0: Execution prohibited 1: Execution permitted	R/W
b31 to b4	—	Reserved	The read value is 0. The write value should always be 0.	R/W

UBAC[2:0] Bits (Background Access Control Bits in User Mode)

These bits specify the background access control in user mode.

16.2.5 Memory-Protection Error Status-Clearing Register (MPECLR)

Address(es): 0008 6508h

	b31	b30	b29	b28	b27	b26	b25	b24	b23	b22	b21	b20	b19	b18	b17	b16
	—	—	—	—	—	—	—	—	—	—	—	—	—	—	—	—
Value after reset:	0	0	0	0	0	0	0	0	0	0	0	0	0	0	0	0

	b15	b14	b13	b12	b11	b10	b9	b8	b7	b6	b5	b4	b3	b2	b1	b0
	—	—	—	—	—	—	—	—	—	—	—	—	—	—	—	CLR
Value after reset:	0	0	0	0	0	0	0	0	0	0	0	0	0	0	0	0

Bit	Symbol	Bit Name	Description	R/W
b0	CLR	Error Status-Clearing	[Reading] 0: Fixed value for reading [Writing] 0: Nothing is done. 1: The DMPER and IMPER bits in MPESTS are cleared to 0.	R/W
b31 to b1	—	Reserved	The read value is 0. The write value should always be 0.	R/W

CLR Bit (Error Status-Clearing)

This bit clears the data read/write bit (DRW), the data memory-protection error generation bit (DMPER), and the instruction memory-protection error generation bit (IMPER) in the memory-protection error status register (MPESTS) to 0.

16.2.6 Memory-Protection Error Status Register (MPESTS)

Address(es): 0008 650Ch

	b31	b30	b29	b28	b27	b26	b25	b24	b23	b22	b21	b20	b19	b18	b17	b16
	—	—	—	—	—	—	—	—	—	—	—	—	—	—	—	—
Value after reset:	0	0	0	0	0	0	0	0	0	0	0	0	0	0	0	0

	b15	b14	b13	b12	b11	b10	b9	b8	b7	b6	b5	b4	b3	b2	b1	b0
	—	—	—	—	—	—	—	—	—	—	—	—	—	DRW	DMPER	IMPER
Value after reset:	0	0	0	0	0	0	0	0	0	0	0	0	0	0	0	0

Bit	Symbol	Bit Name	Description	R/W
b0	IMPER	Instruction Memory-Protection Error Generation	0: No instruction memory-protection error was generated. 1: Instruction memory-protection error was generated.	R
b1	DMPER	Data Memory-Protection Error Generation	0: No data memory-protection error was generated. 1: Data memory-protection error was generated.	R
b2	DRW	Data Read/Write	0: Data were read. 1: Data were written.	R
b31 to b3	—	Reserved	The read value is 0. The write value should always be 0.	R/W

IMPER Bit (Instruction Memory-Protection Error Generation)

This bit indicates the state of memory-protection error generation by instruction execution.

Setting the error status-clearing bit (CLR) in the memory-protection error status-clearing register (MPECLR) to 1 clears this bit to 0.

DMPER Bit (Data Memory-Protection Error Generation)

This bit indicates the state of memory-protection error generation by operand access.

Setting the error status-clearing bit (CLR) in the memory-protection error status-clearing register (MPECLR) to 1 clears this bit to 0.

DRW Bit (Data Read/Write)

For a memory-protection error produced by operand access, this bit indicates the read/write attribute of the access operation. This bit is only valid when the DMPER bit is 1.

Setting the error status-clearing bit (CLR) in the memory-protection error status-clearing register (MPECLR) to 1 clears this bit to 0.

16.2.7 Data Memory-Protection Error Address Register (MPDEA)

Address(es): 0008 6514h

	b31	b30	b29	b28	b27	b26	b25	b24	b23	b22	b21	b20	b19	b18	b17	b16
	DEA[31:0]															
Value after reset:	x	x	x	x	x	x	x	x	x	x	x	x	x	x	x	x

	b15	b14	b13	b12	b11	b10	b9	b8	b7	b6	b5	b4	b3	b2	b1	b0
	DEA[31:0]															
Value after reset:	x	x	x	x	x	x	x	x	x	x	x	x	x	x	x	x

x: Undefined

Bit	Symbol	Bit Name	Description	R/W
b31 to b0	DEA[31:0]	Data Memory-Protection Error Address	Data memory-protection error address	R

DEA[31:0] Bits (Data Memory-Protection Error Address)

These bits retain the address for which operand access generated a memory-protection error.

16.2.8 Region Search Address Register (MPSA)

Address(es): 0008 6520h

	b31	b30	b29	b28	b27	b26	b25	b24	b23	b22	b21	b20	b19	b18	b17	b16
	SA[31:0]															
Value after reset:	x	x	x	x	x	x	x	x	x	x	x	x	x	x	x	x

	b15	b14	b13	b12	b11	b10	b9	b8	b7	b6	b5	b4	b3	b2	b1	b0
	SA[31:0]															
Value after reset:	x	x	x	x	x	x	x	x	x	x	x	x	x	x	x	x

x: Undefined

Bit	Symbol	Bit Name	Description	R/W
b31 to b0	SA[31:0]	Region Search Address	Address for region searching	R/W

SA[31:0] Bits (Region Search Address)

These bits specify the address for use in comparison with region-start addresses in the region-n start page number registers (RSPAGEn) and region-end addresses in the region-n end page number registers (REPAGEn).

16.2.9 Region Search Operation Register (MPOPS)

Address(es): 0008 6524h

	b15	b14	b13	b12	b11	b10	b9	b8	b7	b6	b5	b4	b3	b2	b1	b0
	—	—	—	—	—	—	—	—	—	—	—	—	—	—	—	S
Value after reset:	0	0	0	0	0	0	0	0	0	0	0	0	0	0	0	0

Bit	Symbol	Bit Name	Description	R/W
b0	S	Region Search Operation Activation	[Reading] 0: Fixed value for reading [Writing] 0: Nothing is done. 1: A region-search operation proceeds.	R/W
b15 to b1	—	Reserved	The read value is 0. The write value should always be 0.	R/W

S Bit (Region Search Operation Activation)

Setting this bit to 1 makes the memory-protection unit perform a region-search operation. The address specified in the region search address register (MPSA) is compared with the address information for individual regions to search for a hitting region.

The result of searching is stored in the data-hit region bits (HITD[7:0]) of the data-hit region register (MHITD). Moreover, the logical OR of the respective access control bits for hitting regions is stored in the data-hit region access control bits (UHACD[2:0]) in user mode.

16.2.10 Region Invalidation Operation Register (MPOPI)

Address(es): 0008 6526h

	b15	b14	b13	b12	b11	b10	b9	b8	b7	b6	b5	b4	b3	b2	b1	b0
	—	—	—	—	—	—	—	—	—	—	—	—	—	—	—	INV
Value after reset:	0	0	0	0	0	0	0	0	0	0	0	0	0	0	0	0

Bit	Symbol	Bit Name	Description	R/W
b0	INV	Region Invalidate Start	[Reading] 0: Fixed value for reading [Writing] 0: Nothing is done. 1: All access-controlled areas are invalidated.	R/W
b15 to b1	—	Reserved	The read value is 0. The write value should always be 0.	R/W

INV Bit (Region Invalidate Start)

Setting this bit to 1 clears the valid (V) bits in all of the region-n end page number registers (REPAGEn) to 0. After a V bit is cleared to 0, all settings other than background access-control settings are invalid.

16.2.11 Instruction-Hit Region Register (MHITI)

Address(es): 0008 6528h

	b31	b30	b29	b28	b27	b26	b25	b24	b23	b22	b21	b20	b19	b18	b17	b16
	—	—	—	—	—	—	—	—	HITI[7:0]							
Value after reset:	0	0	0	0	0	0	0	0	0	0	0	0	0	0	0	0

	b15	b14	b13	b12	b11	b10	b9	b8	b7	b6	b5	b4	b3	b2	b1	b0
	—	—	—	—	—	—	—	—	—	—	—	—	UHACI[2:0]			—
Value after reset:	0	0	0	0	0	0	0	0	0	0	0	0	0	0	0	0

Bit	Symbol	Bit Name	Description	R/W
b0	—	Reserved	The read value is 0. The write value should always be 0.	R/W
b3 to b1	UHACI[2:0]	Instruction-Hit Region Access Control Bits in User Mode	b3 0: Reading prohibited 1: Read permitted b2 0: Writing prohibited 1: Writing permitted b1 0: Execution prohibited 1: Execution is permitted.	R
b15 to b4	—	Reserved	The read value is 0. The write value should always be 0.	R/W
b23 to b16	HITI[7:0]	Instruction-Hit Region	When the instruction memory-protection error generation bit (MPESTS.IMPER) = 1, [b23:b16] = 0000 0000b indicates that attempted access to the background region led to an instruction memory-protection error. Other than above b23 0: Instruction memory-protection error was not generated in region 7. 1: Instruction memory-protection error was generated in region 7. b22 0: Instruction memory-protection error was not generated in region 6. 1: Instruction memory-protection error was generated in region 6. b21 0: Instruction memory-protection error was not generated in region 5. 1: Instruction memory-protection error was generated in region 5. b20 0: Instruction memory-protection error was not generated in region 4. 1: Instruction memory-protection error was generated in region 4. b19 0: Instruction memory-protection error was not generated in region 3. 1: Instruction memory-protection error was generated in region 3. b18 0: Instruction memory-protection error was not generated in region 2. 1: Instruction memory-protection error was generated in region 2. b17 0: Instruction memory-protection error was not generated in region 1. 1: Instruction memory-protection error was generated in region 1. b16 0: Instruction memory-protection error was not generated in region 0. 1: Instruction memory-protection error was generated in region 0.	R
b31 to b24	—	Reserved	The read value is 0. The write value should always be 0.	R/W

UHACI[2:0] Bits (Instruction-Hit Region Access Control Bits in User Mode)

These bits hold the user-mode access control bits (REPAGEn.UAC[2:0]) for the region where the instruction memory-protection error was generated.
If the error was generated in an overlap between regions, the value stored here is the logical OR of the user-mode access control bits for the corresponding regions (including the background region).

HITI[7:0] Bits (Instruction-Hit Region)

These bits indicate the region where an instruction memory-protection error was generated. These bits are set to 0000 0000b in response to the generation of an instruction memory-protection error in the background region.

16.2.12 Data-Hit Region Register (MHITD)

Address(es): 0008 652Ch

	b31	b30	b29	b28	b27	b26	b25	b24	b23	b22	b21	b20	b19	b18	b17	b16
	—	—	—	—	—	—	—	—	HITD[7:0]							
Value after reset	0	0	0	0	0	0	0	0	0	0	0	0	0	0	0	0

	b15	b14	b13	b12	b11	b10	b9	b8	b7	b6	b5	b4	b3	b2	b1	b0
	—	—	—	—	—	—	—	—	—	—	—	—	UHACD[2:0]			—
Value after reset	0	0	0	0	0	0	0	0	0	0	0	0	0	0	0	0

Bit	Symbol	Bit Name	Description	R/W
b0	—	Reserved	The read value is 0. The write value should always be 0.	R/W
b3 to b1	UHACD[2:0]	Data-Hit Region Access Control Bits in User Mode	b3 0: Reading prohibited 1: Reading permitted b2 0: Writing prohibited 1: Writing permitted b1 0: Execution prohibited 1: Execution permitted	R
b15 to b4	—	Reserved	The read value is 0. The write value should always be 0.	R/W
b23 to b16	HITD[7:0]	Data-Hit Region	When the data memory-protection error generation bit (MPESTS.DMPER) = 1, [b23:b16] = 0000 0000b indicates that attempted access to the background region led to a data memory-protection error. Other than above b23 0: Neither a data memory-protection error nor a search hit was generated in region 7. 1: A data memory-protection error or search hit was generated in region 7. b22 0: Neither a data memory-protection error nor a search hit was generated in region 6. 1: A data memory-protection error or search hit was generated in region 6. b21 0: Neither a data memory-protection error nor a search hit was generated in region 5. 1: A data memory-protection error or search hit was generated in region 5. b20 0: Neither a data memory-protection error nor a search hit was generated in region 4. 1: A data memory-protection error or search hit was generated in region 4. b19 0: Neither a data memory-protection error nor a search hit was generated in region 3. 1: A data memory-protection error or search hit was generated in region 3. b18 0: Neither a data memory-protection error nor a search hit was generated in region 2. 1: A data memory-protection error or search hit was generated in region 2. b17 0: Neither a data memory-protection error nor a search hit was generated in region 1. 1: A data memory-protection error or search hit was generated in region 1. b16 0: Neither a data memory-protection error nor a search hit was generated in region 0. 1: A data memory-protection error or search hit was generated in region 0.	R
b31 to b24	—	Reserved	The read value is 0. The write value should always be 0.	R/W

UHACD[2:0] Bits (Data-Hit Region Access Control Bits in User Mode)

These bits hold the user-mode access control bits (REPAGEn.UAC[2:0]) that have been set for the region where a data memory-protection error was generated or the region that produced a hit in region searching.
When an error is generated in an overlap between regions or a hit was generated in region searching, the value stored here is the logical OR of the user-mode access control bits for the corresponding regions (including the background region).

HITD[7:0] Bits (Data-Hit Region)

These bits indicate the region where a data memory-protection error was generated or the region that produced a hit in a region search. These bits are set to 0000 0000b for a data memory-protection error generated in the background region.

Note: When access to a register of memory protection unit in user mode generates a data memory-protection error, the value in this register is cleared to 0000 0000h.

16.3 Functions

16.3.1 Memory Protection

Memory protection means monitoring, in accord with the access-control information that has been set for the individual access-control regions and the background region, whether or not access by programs running in user mode violates the access-control settings. The memory-protection unit notifies the CPU of access-control violations (or memory-protection errors) when they are detected, causing the CPU to start access-exception processing.
Memory protection is enabled by setting the memory-protection enable (MPEN) bit in the memory-protection enable (MPEN) register to 1.
An instruction memory-protection error is generated on detection of an instruction-execution violation and a data memory-protection error is generated on detection of an operand-access reading or writing violation. Operand access that leads to a data memory-protection error is not actually executed.

16.3.2 Region Search

Region search means enquiry as to which of the eight specified access regions was “hit” and how the access-control information (permission to execute, to read, and to write) is set.
When the region search operation (S) bit in the region-search operation (MPOPS) register is set to 1, the address specified in the region search address (MPSA) register is compared with the addresses for the individual regions. After a region search is executed, the data-hit region register (MHITD) indicates the logical OR of the access-control information for the region which was “hit” and for the other regions.

16.3.3 Protection of Registers Related to the Memory-Protection Unit

Registers related to the memory-protection unit are not accessible through means of access other than operand access by the CPU (i.e. by instruction fetching or DMA). Attempted access to registers related to the memory-protection unit in user mode through operand access by the CPU leads to a data memory-protection error regardless of whether or not memory protection is in effect at the given location.

16.3.4 Flow for Determination of Access by the Memory-Protection Function

Figure 16.2 shows the flow of determination in the case of data access and Figure 16.3 shows the flow of determination in the case of instruction access.

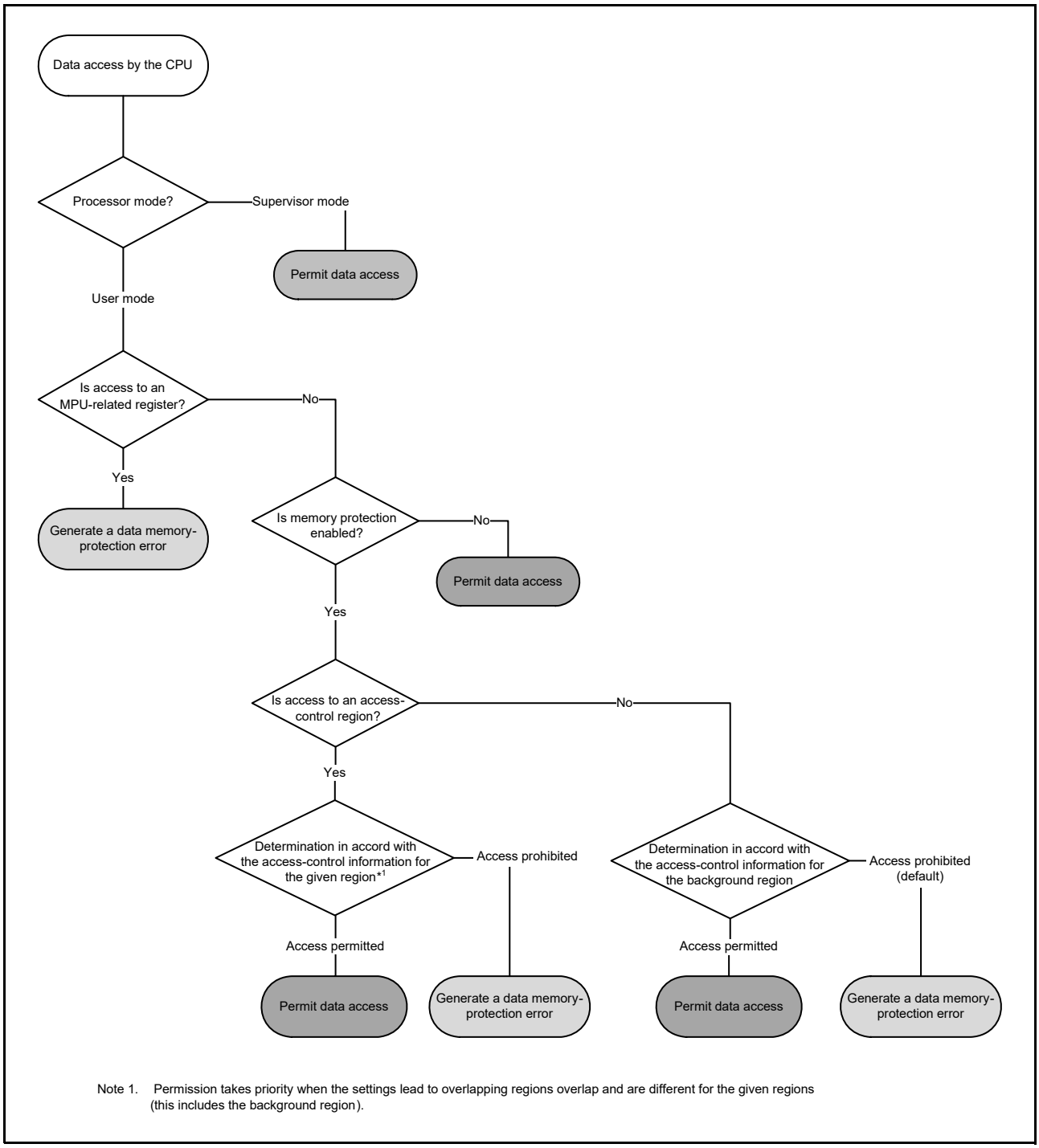

Figure 16.2 Flow of Determination for Data Access

Note 1. Permission takes priority when the settings lead to overlapping regions overlap and are not the same for the given regions (this includes the background region).

Figure 16.3 Flow of Determination for Instruction Access

16.4 Procedures for Using Memory Protection

16.4.1 Setting Access-Control Information

Access-control information for the various regions is set in supervisor mode.
Settings for up to eight access-control regions are made in the region-n start page number registers (RSPAGEn) and region-n end page number registers (REPAGEn), where n = 0 to 7.
Settings for the background access-control region are made in the background access-control register (MPBAC).

16.4.2 Enabling Memory Protection

Setting the memory-protection enable (MPEN) bit in the memory-protection enable (MPEN) register to 1 while operation is in supervisor mode enables memory protection.

16.4.3 Transition to User Mode

After updating the registers related to the memory-protection unit and before the transition to user mode, read any of the registers of the unit, use the value in an operation, confirm that the setting has actually been made, and only then enter the user mode. Either of the methods below can be used for the transition from supervisor mode to user mode.

- Set the processor mode setting (PM) bit in the copy of the processor status word (PSW) saved in the stack area to 1 (the setting for user mode) and then execute an RTE instruction.
- Set the PM bit in the backup processor status word (BPSW) to 1 and then execute an RTFI instruction.

Note: Using an MVTC or POPC instruction to write to the PSW.PM bit is invalid. Use an RTE or RTFI instruction to update the value of the PSW.PM bit.

The memory-protection unit starts checking instruction-execution access and operand access by the CPU on the transition to user mode.

16.4.4 Processing in Response to Memory-Protection Errors

The CPU starts access-exception processing on detection of a violation of protection set up by the access-control information (i.e. a memory-protection error). For details on CPU operations in access-exception processing, refer to section 13, Exception Handling.
To determine whether an instruction memory-protection error or data memory-protection error has been generated, check the values of the instruction memory-protection error generation (IMPER) and data memory-protection error generation (DMPER) bits in the memory-protection error status register (MPESTS) from within the exception-processing routine.
After confirming the type of error, clear the memory-protection error status register (MPESTS) by writing 1 to the status clearing (CLR) bit in the memory-protection error status clearing register (MPECLR).

(1) When a data memory-protection error is generated

Access-exception processing by the CPU saves the address of the instruction that led to the memory-protection error on the stack. Furthermore, the address of the operand for which access led to a memory-protection error is stored in the data memory-protection error address register (MPDEA) and the region information for the region where the memory-protection error was generated is stored in the data-hit region register (MHITD).

- Violations of access control in access to valid regions 0 to 7

The data-hit region bits (MHITD.HITD[7:0]) with the same region number as the region where the error occurred is set to 1. In user mode, the logical "or" of the region access-control information for the location where the error occurred is set in the data-hit region access-control bits (MHITD.UHACD[2:0]).

- Violations of access control for the background region, besides access to outside valid regions 0 to 7

The data-hit region bits (MHITD.HITD[7:0]) are set to 0000 0000b. In user mode, the access-control information for the background region is set in the data-hit region access-control bits (MHITD.UHACD[2:0]).

Referring to this information can pinpoint the sources of errors.

(2) When an instruction memory-protection error is generated

Access-exception processing by the CPU saves the address of the instruction that led to the memory-protection error on the stack. Furthermore, the region information for the region where the memory-protection error was generated is stored in the instruction-hit region register (MHITI).

- Violations of access control in access to valid regions 0 to 7

The instruction-hit region bit (MHITI.HITI[7:0]) with the same region number as the region where the error occurred is set to 1. In user mode, the logical "or" of the region access-control information for the location where the error occurred is set in the instruction-hit region access-control bits (MHITI.UHACI[2:0]).

- Violations of access control for the background region, besides access to outside valid regions 0 to 7

The instruction-hit region bits (MHITI.HITI[7:0]) are set to 0000 0000b. In user mode, the access-control information for the background region is set in the instruction-hit region access-control bits (MHITI.UHACI[2:0]).

Referring to this information can pinpoint the sources of errors.

17. DMA Controller (DMACA)

This MCU incorporates a 4-channel direct memory access controller (DMAC).
The DMAC module performs data transfers without the CPU. When a DMA transfer request is generated, the DMAC transfers data stored at the transfer source address to the transfer destination address.

17.1 Overview

Table 17.1 lists the specifications of the DMAC, and Figure 17.1 shows a block diagram of the DMAC.

Table 17.1 Specifications of DMAC

Item		Description
Number of channels		4 (DMACm (m = 0 to 3))
Transfer space		512 Mbytes (0000 0000h to 0FFF FFFFh and F000 0000h to FFFF FFFFh excluding reserved areas)
Maximum transfer volume		1M data (Maximum number of transfers in block transfer mode: 1,024 data × 1,024 blocks)
DMA request source		• Activation source selectable for each channel Software trigger Interrupt requests from peripheral modules or trigger input to external interrupt input pins*1
Channel priority		Channel 0 > Channel 1 > Channel 2 > Channel 3 (Channel 0: Highest)
Transfer data	Single data	Bit length: 8, 16, 32 bits
	Block size	Number of data: 1 to 1,024
Transfer mode	Normal transfer mode	• One data transfer by one DMA transfer request • Free running mode (setting in which total number of data transfers is not specified) settable
	Repeat transfer mode	• One data transfer by one DMA transfer request • Program returns to the transfer start address on completion of the repeat size of data transfer specified for the transfer source or destination. • Maximum settable repeat size: 1,024
	Block transfer mode	• One block data transfer by one DMA transfer request • Maximum settable block size: 1,024 data
Selective functions	Extended repeat area function	• Function in which data can be transferred by repeating the address values in the specified range with the upper bit values in the transfer address register fixed • Area of 2 bytes to 128 Mbytes separately settable as extended repeat area for transfer source and destination
Interrupt request	Transfer end interrupt	Generated on completion of transferring data volume specified by the transfer counter.
	Transfer escape end interrupt	Generated when the repeat size of data transfer is completed or the extended repeat area overflows.
Power consumption reduction function		Module stop state can be set.
Event link function		Event link request is generated after one data transfer (for block, after one block transfer).

Note 1. For details on DMAC activation sources, see Table 14.3, Interrupt Vector Table in section 14, Interrupt Controller (ICUb).

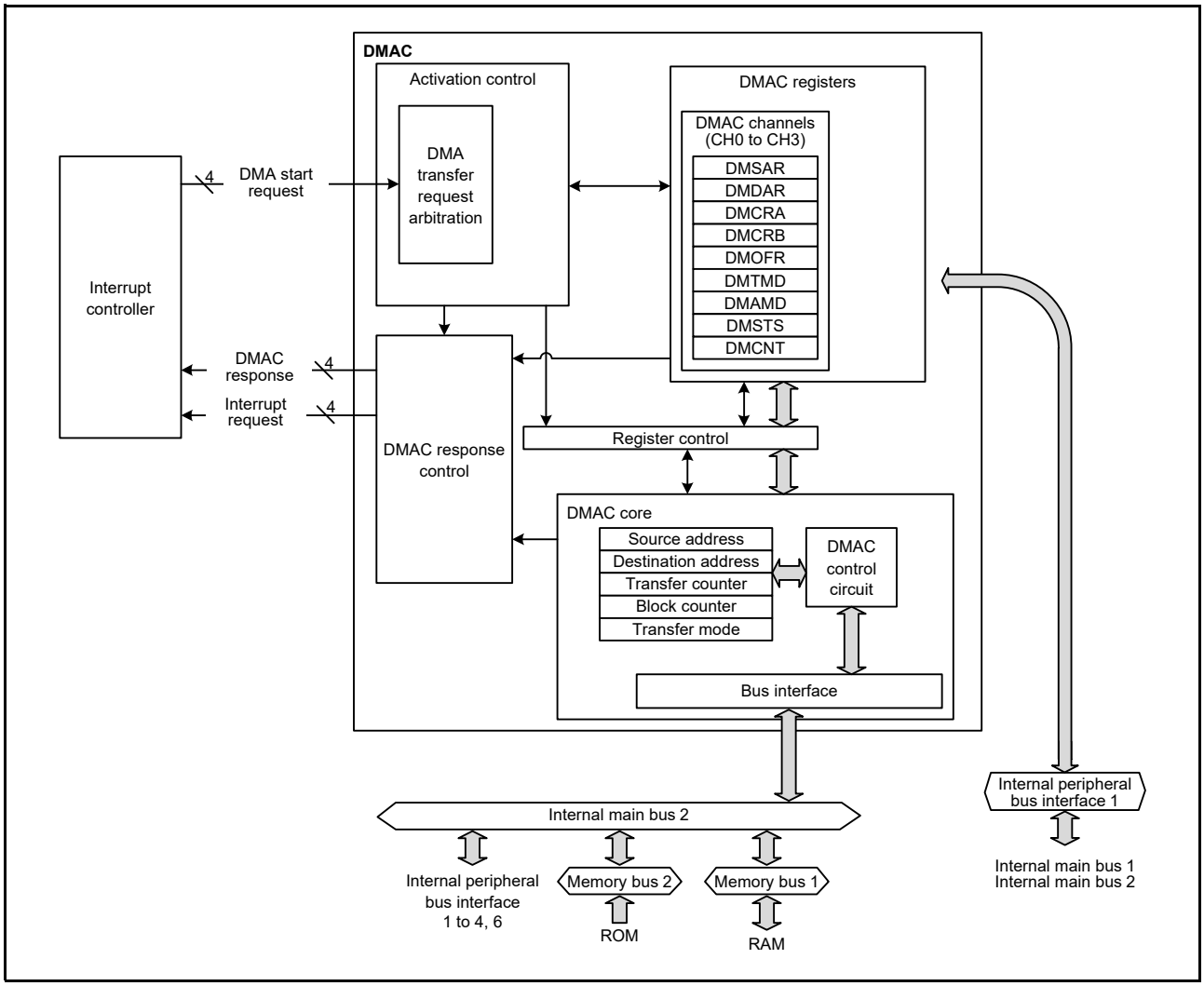

Figure 17.1 Block Diagram of DMAC

17.2 Register Descriptions

17.2.1 DMA Source Address Register (DMSAR)

Address(es): DMAC0.DMSAR 0008 2000h, DMAC1.DMSAR 0008 2040h, DMAC2.DMSAR 0008 2080h, DMAC3.DMSAR 0008 20C0h

	b31	b30	b29	b28	b27	b26	b25	b24	b23	b22	b21	b20	b19	b18	b17	b16
Value after reset:	0	0	0	0	0	0	0	0	0	0	0	0	0	0	0	0

	b15	b14	b13	b12	b11	b10	b9	b8	b7	b6	b5	b4	b3	b2	b1	b0
Value after reset:	0	0	0	0	0	0	0	0	0	0	0	0	0	0	0	0

Bit	Description	Setting Range	R/W
b31 to b0	Specifies the transfer source start address.	0000 0000h to 0FFF FFFFh (256 Mbytes) F000 0000h to FFFF FFFFh (256 Mbytes)	R/W

Set DMSAR while DMAC activation is disabled (the DMST bit in DMAST = 0) or DMA transfer is disabled (the DTE bit in DMCNT = 0).
Setting bits 31 to 29 is invalid; a value of bit 28 is extended to bits 31 to 29. Reading DMSAR returns the extended value.

17.2.2 DMA Destination Address Register (DMDAR)

Address(es): DMAC0.DMDAR 0008 2004h, DMAC1.DMDAR 0008 2044h, DMAC2.DMDAR 0008 2084h, DMAC3.DMDAR 0008 20C4h

	b31	b30	b29	b28	b27	b26	b25	b24	b23	b22	b21	b20	b19	b18	b17	b16
Value after reset:	0	0	0	0	0	0	0	0	0	0	0	0	0	0	0	0

	b15	b14	b13	b12	b11	b10	b9	b8	b7	b6	b5	b4	b3	b2	b1	b0
Value after reset:	0	0	0	0	0	0	0	0	0	0	0	0	0	0	0	0

Bit	Description	Setting Range	R/W
b31 to b0	Specifies the transfer destination start address.	0000 0000h to 0FFF FFFFh (256 Mbytes) F000 0000h to FFFF FFFFh (256 Mbytes)	R/W

DMDAR specifies the start address of the transfer destination. Set DMDAR while DMAC activation is disabled (the DMST bit in DMAST = 0) or DMA transfer is disabled (the DTE bit in DMCNT = 0).
Setting bits 31 to 29 is invalid; a value of bit 28 is extended to bits 31 to 29. Reading DMDAR returns the extended value.

17.2.3 DMA Transfer Count Register (DMCRA)

Address(es): DMAC0.DMCRA 0008 2008h, DMAC1.DMCRA 0008 2048h, DMAC2.DMCRA 0008 2088h, DMAC3.DMCRA 0008 20C8h

- Normal transfer mode

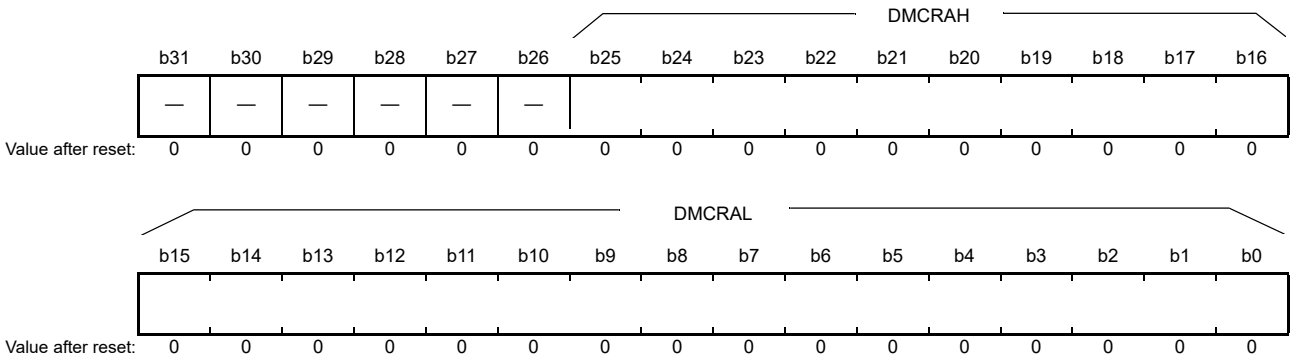

- Repeat transfer mode, block transfer mode

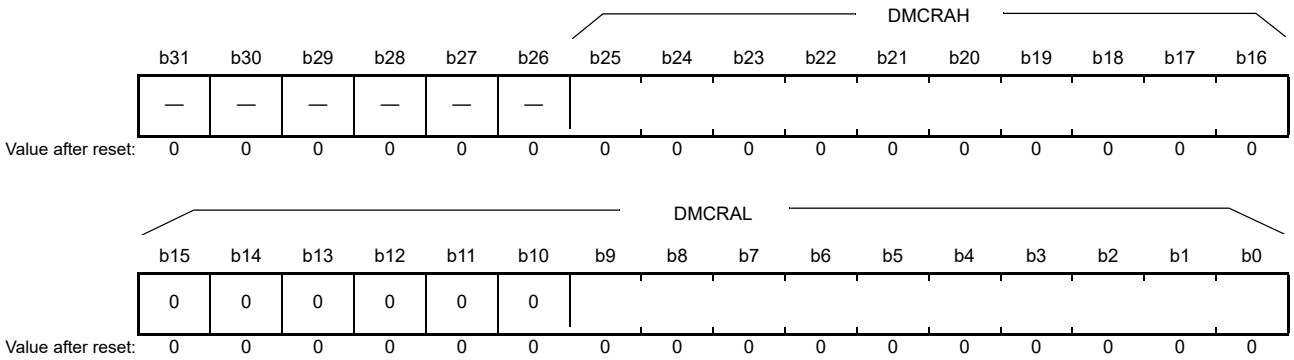

Symbol	Bit Name	Description	R/W
DMCRAL	Lower bits of transfer count	Specifies the number of transfer operations	R/W
DMCRAH	Upper bits of transfer count		R/W

Note: Set the same value for DMCRAH and DMCRAL in repeat transfer mode and block transfer mode.

(1) Normal Transfer Mode (MD[1:0] Bits in DMACm.DMTMD = 00b)

DMCRAL functions as a 16-bit transfer counter.

The number of transfer operations is one when the setting is 0001h, and 65535 when it is FFFFh. The value is decremented by one each time data is transferred.

When the setting is 0000h, no specific number of transfer operations is set; data transfer is performed with the transfer counter stopped (free running mode).

DMCRAH is not used in normal transfer mode. Write 0000h to DMCRAH.

(2) Repeat Transfer Mode (MD[1:0] Bits in DMACm.DMTMD = 01b)

DMCRAH specifies the repeat size and DMCRAL functions as a 10-bit transfer counter.
The number of transfer operations is one when the setting is 001h, 1023 when it is 3FFh, and 1024 when it is 000h. In repeat transfer mode, a value in the range of 000h to 3FFh (1 to 1024) can be set for DMCRAH and DMCRAL.
Setting bits 15 to 10 in DMCRAL is invalid. Write 0 to these bits.
The value in DMCRAL is decremented by one each time data is transferred until it reaches 000h, at which the value in DMCRAH is loaded into DMCRAL.

(3) Block Transfer Mode (MD[1:0] Bits in DMACm.DMTMD = 10b)

DMCRAH specifies the block size and DMCRAL functions as a 10-bit block size counter.
The block size is one when the setting is 001h, 1023 when it is 3FFh, and 1024 when it is 000h. In block transfer mode, a value in the range of 000h to 3FFh can be set for DMCRAH and DMCRAL.
Setting bits 15 to 10 in DMCRAL is invalid. Write 0 to these bits.
The value in DMCRAL is decremented by one each time data is transferred until it reaches 000h, at which the value in DMCRAH is loaded into DMCRAL.

17.2.4 DMA Block Transfer Count Register (DMCRB)

Address(es): DMAC0.DMCRB 0008 200Ch, DMAC1.DMCRB 0008 204Ch, DMAC2.DMCRB 0008 208Ch, DMAC3.DMCRB 0008 20CCh

	b15	b14	b13	b12	b11	b10	b9	b8	b7	b6	b5	b4	b3	b2	b1	b0
	—	—	—	—	—	—										
Value after reset:	0	0	0	0	0	0	0	0	0	0	0	0	0	0	0	0

Bit	Description	Setting Range	R/W
b9 to b0	Specifies the number of block transfer operations or repeat transfer operations.	001h to 3FFh (1 to 1023) 000h (1024)	R/W
b15 to b10	Reserved	These bits are read as 0. The write value should be 0.	R/W

DMCRB specifies the number of block transfer operations and repeat transfer operations in block and repeat transfer mode, respectively.
The number of transfer operations is one when the setting is 001h, 1023 when it is 3FFh, and 1024 when it is 000h.
In repeat transfer mode, the value is decremented by one when the final data of one repeat size is transferred.
In block transfer mode, the value is decremented by one when the final data of one block size is transferred.
In normal transfer mode, DMCRB is not used. The setting is invalid.

17.2.5 DMA Transfer Mode Register (DMTMD)

Address(es): DMAC0.DMTMD 0008 2010h, DMAC1.DMTMD 0008 2050h, DMAC2.DMTMD 0008 2090h, DMAC3.DMTMD 0008 20D0h

	b15	b14	b13	b12	b11	b10	b9	b8	b7	b6	b5	b4	b3	b2	b1	b0
	MD[1:0]		DTS[1:0]		—	—	SZ[1:0]		—	—	—	—	—	—	DCTG[1:0]	
Value after reset:	0	0	0	0	0	0	0	0	0	0	0	0	0	0	0	0

Bit	Symbol	Bit Name	Description	R/W
b1, b0	DCTG[1:0]	DMA Request Source Select	b1 b0 0 0: Software 0 1: Interrupts*1 from peripheral modules or external interrupt input pins 1 0: Setting prohibited 1 1: Setting prohibited	R/W
b7 to b2	—	Reserved	These bits are read as 0. The write value should be 0.	R/W
b9, b8	SZ[1:0]	Transfer Data Size Select	b9 b8 0 0: 8 bits 0 1: 16 bits 1 0: 32 bits 1 1: Setting prohibited	R/W
b11, b10	—	Reserved	These bits are read as 0. The write value should be 0.	R/W
b13, b12	DTS[1:0]	Repeat Area Select	b13 b12 0 0: The destination is specified as the repeat area or block area. 0 1: The source is specified as the repeat area or block area. 1 0: The repeat area or block area is not specified. 1 1: Setting prohibited	R/W
b15, b14	MD[1:0]	Transfer Mode Select	b15 b14 0 0: Normal transfer 0 1: Repeat transfer 1 0: Block transfer 1 1: Setting prohibited	R/W

Note 1. DMAC activation source is selected using the DMRSRm registers of the ICU. For details on DMAC activation sources, see Table 14.3, Interrupt Vector Table in section 14, Interrupt Controller (ICUb).

DTS[1:0] Bits (Repeat Area Select)

DTS[1:0] select either the source or destination as the repeat area in repeat or block transfer mode. In normal transfer mode, setting these bits is invalid.

17.2.6 DMA Interrupt Setting Register (DMINT)

Address(es): DMAC0.DMINT 0008 2013h, DMAC1.DMINT 0008 2053h, DMAC2.DMINT 0008 2093h, DMAC3.DMINT 0008 20D3h

	b7	b6	b5	b4	b3	b2	b1	b0
	—	—	—	DTIE	ESIE	RPTIE	SARIE	DARIE
Value after reset:	0	0	0	0	0	0	0	0

Bit	Symbol	Bit Name	Description	R/W
b0	DARIE	Destination Address Extended Repeat Area Overflow Interrupt Enable	0: Disables an interrupt request for an extended repeat area overflow on the destination address 1: Enables an interrupt request for an extended repeat area overflow on the destination address	R/W
b1	SARIE	Source Address Extended Repeat Area Overflow Interrupt Enable	0: Disables an interrupt request for an extended repeat area overflow on the source address 1: Enables an interrupt request for an extended repeat area overflow on the source address	R/W
b2	RPTIE	Repeat Size End Interrupt Enable	0: Disables the repeat size end interrupt request. 1: Enables the repeat size end interrupt request.	R/W
b3	ESIE	Transfer Escape End Interrupt Enable	0: Disables the transfer escape end interrupt request. 1: Enables the transfer escape end interrupt request.	R/W
b4	DTIE	Transfer End Interrupt Enable	0: Disables the transfer end interrupt request. 1: Enables the transfer end interrupt request.	R/W
b7 to b5	—	Reserved	These bits are read as 0. The write value should be 0.	R/W

DARIE Bit (Destination Address Extended Repeat Area Overflow Interrupt Enable)

When an extended repeat area overflow on the destination address occurs while this bit is set to 1, the DTE bit in DMCNT is cleared to 0. At the same time, the ESIF flag in DMSTS is set to 1 to indicate that an interrupt by an extended repeat area overflow on the destination address is requested.

When block transfer mode is used with the extended repeat area function, an interrupt is requested after completion of a 1-block size transfer. When setting 1 in the DTE bit in DMACm.DMCNT of the channel for which a transfer has been stopped, the transfer is resumed from the state when the transfer is stopped.

When the extended repeat area is not specified for the destination address, this bit is ignored.

SARIE Bit (Source Address Extended Repeat Area Overflow Interrupt Enable)

When an extended repeat area overflow on the source address occurs while this bit is set to 1, the DTE bit in DMCNT is cleared to 0. At the same time, the ESIF flag in DMSTS is set to 1 to indicate that an interrupt by an extended repeat area overflow on the source address is requested.

When block transfer mode is used with the extended repeat area function, an interrupt is requested after completion of a 1-block size transfer. When setting 1 in the DTE bit in DMACm.DMCNT of the channel for which a transfer has been stopped, the transfer is resumed from the state when the transfer is stopped.

When the extended repeat area is not specified for the source address, this bit is ignored.

RPTIE Bit (Repeat Size End Interrupt Enable)

When this bit is set to 1 in repeat transfer mode, the DTE bit in DMCNT is cleared to 0 after completion of a 1-repeat size data transfer. At the same time, the ESIF flag in DMSTS is set to 1 to indicate that the repeat size end interrupt request has been generated. The repeat size end interrupt request can be generated even when the DTS[1:0] bits in DMTMD are 10b (= repeat area or block area is not specified).

When this bit is set to 1 in block transfer mode, the DTE bit in DMCNT is cleared to 0 after completion of a 1-block data transfer in the same way as repeat transfer mode. At the same time, the ESIF flag in DMSTS is set to 1 to indicate that the repeat size end interrupt request has been generated. The repeat size end interrupt request can be generated even when the DTS[1:0] bits in DMTMD are 10b (= repeat area or block area is not specified).

ESIE Bit (Transfer Escape End Interrupt Enable)

This bit enables or disables the transfer escape end interrupt requests (repeat size end interrupt request and extended repeat area overflow interrupt request) that are generated during DMA transfer.

The transfer escape end interrupt is generated when the ESIF flag in DMSTS is set to 1 with this bit set to 1. The transfer escape end interrupt is cleared by clearing this bit or the ESIF flag in DMSTS to 0.

DTIE Bit (Transfer End Interrupt Enable)

This bit enables or disables the transfer end interrupt request to be generated on completion of a specified number of data transfers.

The transfer end interrupt is generated when the DTIF bit in DMSTS is set to 1 with this bit set to 1. The transfer end interrupt is cleared by clearing this bit or the DTIF bit in DMSTS to 0.

17.2.7 DMA Address Mode Register (DMAMD)

Address(es): DMAC0.DMAMD 0008 2014h, DMAC1.DMAMD 0008 2054h, DMAC2.DMAMD 0008 2094h, DMAC3.DMAMD 0008 20D4h

	b15	b14	b13	b12	b11	b10	b9	b8	b7	b6	b5	b4	b3	b2	b1	b0
	SM[1:0]		—	SARA[4:0]					DM[1:0]		—	DARA[4:0]				
Value after reset:	0	0	0	0	0	0	0	0	0	0	0	0	0	0	0	0

Bit	Symbol	Bit Name	Description	R/W
b4 to b0	DARA[4:0]	Destination Address Extended Repeat Area	Specifies the extended repeat area on the destination address. For details on the settings, see Table 17.2.	R/W
b5	—	Reserved	This bit is read as 0. The write value should be 0.	R/W
b7, b6	DM[1:0]	Destination Address Update Mode	b7 b6 0 0: Destination address is fixed. 0 1: Offset addition*1 1 0: Destination address is incremented. 1 1: Destination address is decremented.	R/W
b12 to b8	SARA[4:0]	Source Address Extended Repeat Area	Specifies the extended repeat area on the source address. For details on the settings, see Table 17.2.	R/W
b13	—	Reserved	This bit is read as 0. The write value should be 0.	R/W
b15, b14	SM[1:0]	Source Address Update Mode	b15 b14 0 0: Source address is fixed. 0 1: Offset addition*1 1 0: Source address is incremented. 1 1: Source address is decremented.	R/W

Note 1. Offset addition can be specified only for DMAC0.

DARA[4:0] Bits (Destination Address Extended Repeat Area)

These bits specify the extended repeat area on the destination address. The extended repeat area function is realized by updating the specified lower address bits with the remaining upper address bits fixed. The size of the extended repeat area can be any power of two between 2 bytes and 128 Mbytes.

When the lower address overflows the extended repeat area by address increment, the start address of the extended repeat area is set. Similarly, when the lower address underflows the extended repeat area by address decrement, the end address of the extended repeat area is set.

When the repeat area or block area is specified as a transfer destination, do not specify the extended repeat area on the destination address. When repeat transfer or block transfer is selected, or when DMACm.DMTMD.DTS[1:0] = 00b (the transfer destination is specified as the repeat area or block area), write 00000b in the DARA[4:0] bits.

An interrupt can be requested when an overflow or underflow occurs in the extended repeat area with the DARIE bit in DMINT set to 1. Table 17.2 lists the settings and the corresponding extended repeat areas.

DM[1:0] Bits (Destination Address Update Mode)

These bits select the mode of updating the destination address.

When increment is selected and the SZ[1:0] bits in DMTMD are set to 00b, 01b, and 10b, the destination address is incremented by 1, 2, and 4, respectively.

When decrement is selected and the SZ[1:0] bits in DMTMD are set to 00b, 01b, and 10b, the destination address is decremented by 1, 2, and 4, respectively.

When offset addition is selected, the offset specified by the DMAC0.DMOFR register is added to the address.

Offset addition can be specified only for DMAC0.

SARA[4:0] Bits (Source Address Extended Repeat Area)

These bits specify the extended repeat area on the source address. The extended repeat area function is realized by updating the specified lower address bits with the remaining upper address bits fixed. The size of the extended repeat area can be any power of two between 2 bytes and 128 Mbytes.

When the lower address overflows the extended repeat area by address increment, the start address of the extended repeat area is set. Similarly, when the lower address underflows the extended repeat area by address decrement, the end address of the extended repeat area is set.

When the repeat area or block area is specified as a transfer source, do not specify the extended repeat area on the source address. When repeat transfer or block transfer is selected, or when DMACm.DMTMD.DTS[1:0] = 01b (the transfer source is specified as the repeat area or block area), write 00000b in the SARA[4:0] bits.

An interrupt can be requested when an overflow or underflow occurs in the extended repeat area with the SARIE bit in DMINT set to 1. Table 17.2 lists the settings and the corresponding extended repeat areas.

SM[1:0] Bit (Source Address Update Mode)

These bits select the mode of updating the source address.

When increment is selected and the SZ[1:0] bits in DMTMD are set to 00b, 01b, and 10b, the source address is incremented by 1, 2, and 4, respectively.

When decrement is selected and the SZ[1:0] bits in DMTMD are set to 00b, 01b, and 10b, the source address is decremented by 1, 2, and 4, respectively.

When offset addition is selected, the offset specified by the DMAC0.DMOFR register is added to the address. Offset addition can be specified only for DMAC0.

Table 17.2 SARA[4:0] or DARA[4:0] Settings and Corresponding Repeat Areas

SARA4 to SARA0 or DARA4 to DARA0	Extended Repeat Area
00000b	Not specified
00001b	2 bytes specified as extended repeat area by the lower 1 bit of the address
00010b	4 bytes specified as extended repeat area by the lower 2 bits of the address
00011b	8 bytes specified as extended repeat area by the lower 3 bits of the address
00100b	16 bytes specified as extended repeat area by the lower 4 bits of the address
00101b	32 bytes specified as extended repeat area by the lower 5 bits of the address
00110b	64 bytes specified as extended repeat area by the lower 6 bits of the address
00111b	128 bytes specified as extended repeat area by the lower 7 bits of the address
01000b	256 bytes specified as extended repeat area by the lower 8 bits of the address
01001b	512 bytes specified as extended repeat area by the lower 9 bits of the address
01010b	1 Kbyte specified as extended repeat area by the lower 10 bits of the address
01011b	2 Kbytes specified as extended repeat area by the lower 11 bits of the address
01100b	4 Kbytes specified as extended repeat area by the lower 12 bits of the address
01101b	8 Kbytes specified as extended repeat area by the lower 13 bits of the address
01110b	16 Kbytes specified as extended repeat area by the lower 14 bits of the address
01111b	32 Kbytes specified as extended repeat area by the lower 15 bits of the address
10000b	64 Kbytes specified as extended repeat area by the lower 16 bits of the address
10001b	128 Kbytes specified as extended repeat area by the lower 17 bits of the address
10010b	256 Kbytes specified as extended repeat area by the lower 18 bits of the address
10011b	512 Kbytes specified as extended repeat area by the lower 19 bits of the address
10100b	1 Mbyte specified as extended repeat area by the lower 20 bits of the address
10101b	2 Mbytes specified as extended repeat area by the lower 21 bits of the address
10110b	4 Mbytes specified as extended repeat area by the lower 22 bits of the address
10111b	8 Mbytes specified as extended repeat area by the lower 23 bits of the address
11000b	16 Mbytes specified as extended repeat area by the lower 24 bits of the address
11001b	32 Mbytes specified as extended repeat area by the lower 25 bits of the address
11010b	64 Mbytes specified as extended repeat area by the lower 26 bits of the address
11011b	128 Mbytes specified as extended repeat area by the lower 27 bits of the address
11100b to 11111b	Setting prohibited.

17.2.8 DMA Offset Register (DMOFR)

Address(es): DMAC0.DMOFR 0008 2018h

	b31	b30	b29	b28	b27	b26	b25	b24	b23	b22	b21	b20	b19	b18	b17	b16
Value after reset:	0	0	0	0	0	0	0	0	0	0	0	0	0	0	0	0

	b15	b14	b13	b12	b11	b10	b9	b8	b7	b6	b5	b4	b3	b2	b1	b0
Value after reset:	0	0	0	0	0	0	0	0	0	0	0	0	0	0	0	0

Bit	Description	Setting Range	R/W
b31 to b0	Specifies the offset when offset addition is selected as the address update mode for transfer source or destination.	0000 0000h to 00FF FFFFh (0 bytes to (16 M – 1) bytes) FF00 0000h to FFFF FFFFh (–16 Mbytes to –1 byte)	R/W

Write to this register while the DMAC operation is stopped or DMA transfer is disabled (not during data transfer). Setting bits 31 to 25 is invalid; a value of bit 24 is extended to bits 31 to 25. Reading DMOFR returns the extended value.

17.2.9 DMA Transfer Enable Register (DMCNT)

Address(es): DMAC0.DMCNT 0008 201Ch, DMAC1.DMCNT 0008 205Ch, DMAC2.DMCNT 0008 209Ch, DMAC3.DMCNT 0008 20DCh

	b7	b6	b5	b4	b3	b2	b1	b0
	—	—	—	—	—	—	—	DTE
Value after reset:	0	0	0	0	0	0	0	0

Bit	Symbol	Bit Name	Description	R/W
b0	DTE	DMA Transfer Enable	0: Disables DMA transfer. 1: Enables DMA transfer.	R/W
b7 to b1	—	Reserved	These bits are read as 0. The write value should be 0.	R/W

DTE Bit (DMA Transfer Enable)

When the DMST bit in DMAST is set to 1 (DMAC activation is enabled) and this bit is set to 1 (DMA transfer is enabled), DMA transfer can be started for the corresponding channel.

[Setting condition]

- When 1 is written to this bit.

[Clearing conditions]

- When 0 is written to this bit.
- When the specified total volume of data transfer is completed.
- When DMA transfer is stopped by the repeat size end interrupt.
- When DMA transfer is stopped by the extended repeat area overflow interrupt.

17.2.10 DMA Software Start Register (DMREQ)

Address(es): DMAC0.DMREQ 0008 201Dh, DMAC1.DMREQ 0008 205Dh, DMAC2.DMREQ 0008 209Dh, DMAC3.DMREQ 0008 20DDh

	b7	b6	b5	b4	b3	b2	b1	b0
	—	—	—	CLRS	—	—	—	SWREQ
Value after reset:	0	0	0	0	0	0	0	0

Bit	Symbol	Bit Name	Description	R/W
b0	SWREQ	DMA Software Start	0: DMA transfer is not requested. 1: DMA transfer is requested.	R/W
b3 to b1	—	Reserved	These bits are read as 0. The write value should be 0.	R/W
b4	CLRS	DMA Software Start Bit Auto Clear Select	0: SWREQ bit is cleared after DMA transfer is started by software. 1: SWREQ bit is not cleared after DMA transfer is started by software.	R/W
b7 to b5	—	Reserved	These bits are read as 0. The write value should be 0.	R/W

SWREQ Bit (DMA Software Start)

When 1 is written to this bit, a DMA transfer request is generated. After DMA transfer is started in response to the request, this bit is cleared to 0 if the CLRS bit is set to 0. This bit is not cleared to 0 while the CLRS bit is set to 1. In this case, a DMA transfer request can be issued again after completion of a transfer.
Note that, however, setting this bit is valid and DMA transfer by software is enabled only when the DCTG[1:0] bits in DMTMD are set to 00b (DMA activation source is software).
Setting this bit is invalid when the DCTG[1:0] bits in DMTMD are set to a value other than 00b.
To start DMA transfer by software with the CLRS bit being 0, ensure that the SWREQ bit is 0, and then write 1 to the SWREQ bit.

[Setting condition]

- When 1 is written to this bit.

[Clearing conditions]

- When a DMA transfer request by software is accepted and DMA transfer is started while the CLRS bit is set to 0 (the SWREQ bit is cleared after DMA transfer is started by software).
- When 0 is written to this bit.

CLRS Bit (DMA Software Start Bit Auto Clear Select)

This bit specifies whether to clear the SWREQ bit to 0 after DMA transfer is started in response to the DMA transfer request generated by setting the SWREQ bit to 1. With this bit set to 0, the SWREQ bit is cleared to 0 after DMA transfer is started. With this bit set to 1, the SWREQ bit is not cleared to 0. In this case, a DMA transfer request can be issued again after completion of a transfer.

17.2.11 DMA Status Register (DMSTS)

Address(es): DMAC0.DMSTS 0008 201Eh, DMAC1.DMSTS 0008 205Eh, DMAC2.DMSTS 0008 209Eh, DMAC3.DMSTS 0008 20DEh

	b7	b6	b5	b4	b3	b2	b1	b0
	ACT	—	—	DTIF	—	—	—	ESIF
Value after reset:	0	0	0	0	0	0	0	0

Bit	Symbol	Bit Name	Description	R/W
b0	ESIF	Transfer Escape End Interrupt Flag	0: A transfer escape end interrupt has not been generated. 1: A transfer escape end interrupt has been generated.	R/W*1
b3 to b1	—	Reserved	These bits are read as 0. Writing to these bits has no effect.	R
b4	DTIF	Transfer End Interrupt Flag	0: A transfer end interrupt has not been generated. 1: A transfer end interrupt has been generated.	R/W*1
b6, b5	—	Reserved	These bits are read as 0. Writing to these bits has no effect.	R
b7	ACT	DMA Active Flag	0: DMAC operation is suspended. 1: DMAC is operating.	R

Note 1. Only 0 can be written to clear the flag.

ESIF Flag (Transfer Escape End Interrupt Flag)

This flag indicates that the transfer escape end interrupt has been generated.

[Setting conditions]

- When 1-repeat size data transfer is completed in repeat transfer mode with the RPTIE bit in DMINT set to 1.
- When 1-block data transfer is completed in block transfer mode with the RPTIE bit in DMINT set to 1.
- When an extended repeat area overflow on the source address occurs while the SARIE bit in DMINT is set to 1 and the SARA[4:0] bits in DMAMD are set to a value other than 00000b (extended repeat area is specified on the transfer source address)
- When an extended repeat area overflow on the destination address occurs while the DARIE bit in DMINT is set to 1 and the DARA[4:0] bits in DMAMD are set to a value other than 00000b (extended repeat area is specified on the transfer destination address)

[Clearing conditions]

- When 0 is written to this bit.
- When 1 is written to the DTE bit in DMCNT.

DTIF Flag (Transfer End Interrupt Flag)

This flag indicates that the transfer end interrupt has been generated.

[Setting conditions]

- When the specified number of unit-transfers are completed in normal transfer mode (the value of DMCRAL becoming 0 on completion of transfer)
- When the specified number of repeat transfer operations are completed in repeat transfer mode (the value of DMCRB becoming 0 on completion of transfer))
- When the specified number of blocks have been transferred in block transfer mode (the value of DMCRB becoming 0 on completion of transfer)

[Clearing conditions]

- When 0 is written to this bit
- When 1 is written to the DTE bit in DMCNT

ACT Flag (DMA Active Flag)

This flag indicates whether the DMAC is in the idle or active state.

[Setting condition]

- When the DMAC starts data transfer operation

[Clearing condition]

- When data transfer in response to one transfer request is completed

17.2.12 DMA Activation Source Flag Control Register (DMCSL)

Address(es): DMAC0.DMCSL 0008 201Fh, DMAC1.DMCSL 0008 205Fh, DMAC2.DMCSL 0008 209Fh, DMAC3.DMCSL 0008 20DFh

	b7	b6	b5	b4	b3	b2	b1	b0
	—	—	—	—	—	—	—	DISEL
Value after reset:	0	0	0	0	0	0	0	0

Bit	Symbol	Bit Name	Description	R/W
b0	DISEL	Interrupt Select	0: At the beginning of transfer, clear the interrupt flag of the activation source to 0. 1: At the end of transfer, the interrupt flag of the activation source issues an interrupt to the CPU.	R/W
b7 to b1	—	Reserved	These bits are read as 0. The write value should be 0.	R/W

DISEL Bit (Interrupt Select)

This bit selects whether the interrupt flag of the activation source of the DMAC is cleared to 0 or issues an interrupt to the CPU, at the beginning of transfer.

When DMTMD.DCTG[1:0] = 00b (activation by software), the setting of the DISEL bit does not affect the operation.

17.2.13 DMA Module Activation Register (DMAST)

Address(es): 0008 2200h

	b7	b6	b5	b4	b3	b2	b1	b0
	—	—	—	—	—	—	—	DMST
Value after reset:	0	0	0	0	0	0	0	0

Bit	Symbol	Bit Name	Description	R/W
b0	DMST	DMAC Operation Enable	0: DMAC activation is disabled. 1: DMAC activation is enabled.	R/W
b7 to b1	—	Reserved	These bits are read as 0. The write value should be 0.	R/W

DMST Bit (DMAC Operation Enable)

When this bit is set to 1, DMAC activation is enabled for all channels.

When 1 is written to the DMACm.DMCNT.DTE bit (DMA transfer is enabled) of multiple channels and then this bit is set to 1 (DMAC activation is enabled), the corresponding multiple channels can be placed in the transfer request acceptable state at the same time.

When the DMST bit is cleared to 0 during DMA transfer, DMA transfer is suspended after completion of the current data transfer corresponding to a single transfer request. DMA transfer is resumed by setting the DMST bit to 1 again.

[Setting condition]

- When 1 is written to this bit

[Clearing condition]

- When 0 is written to this bit

17.3 Operation

17.3.1 Transfer Mode

(1) Normal Transfer Mode

In normal transfer mode, one data is transferred by one transfer request. A maximum of 65535 can be set as the number of transfer operations using the DMCRAL of DMACm. When these bits are set to 0000h, no specific number of transfer operations is set; data transfer is performed with the transfer counter stopped (free running mode). Setting DMCRB of DMACm is invalid in normal transfer mode. Except in free running mode, a transfer end interrupt request can be generated after completion of the specified number of transfer operations.

Table 17.3 summarizes the register update operation in normal transfer mode, and Figure 17.2 shows the operation in normal transfer mode.

Table 17.3 Register Update Operation in Normal Transfer Mode

Register	Function	Update Operation after Completion of a Transfer by One Transfer Request
DMACm.DMSAR	Transfer source address	Increment/decrement/fixed/offset addition*1
DMACm.DMDAR	Transfer destination address	Increment/decrement/fixed/offset addition*1
DMACm.DMCRAL	Transfer count	Decremented by one/not updated (in free running mode)
DMACm.DMCRAH	—	Not updated (Not used in normal transfer mode)
DMACm.DMCRB	—	Not updated (Not used in normal transfer mode)

Note 1. Offset addition can be specified only for DMAC0.

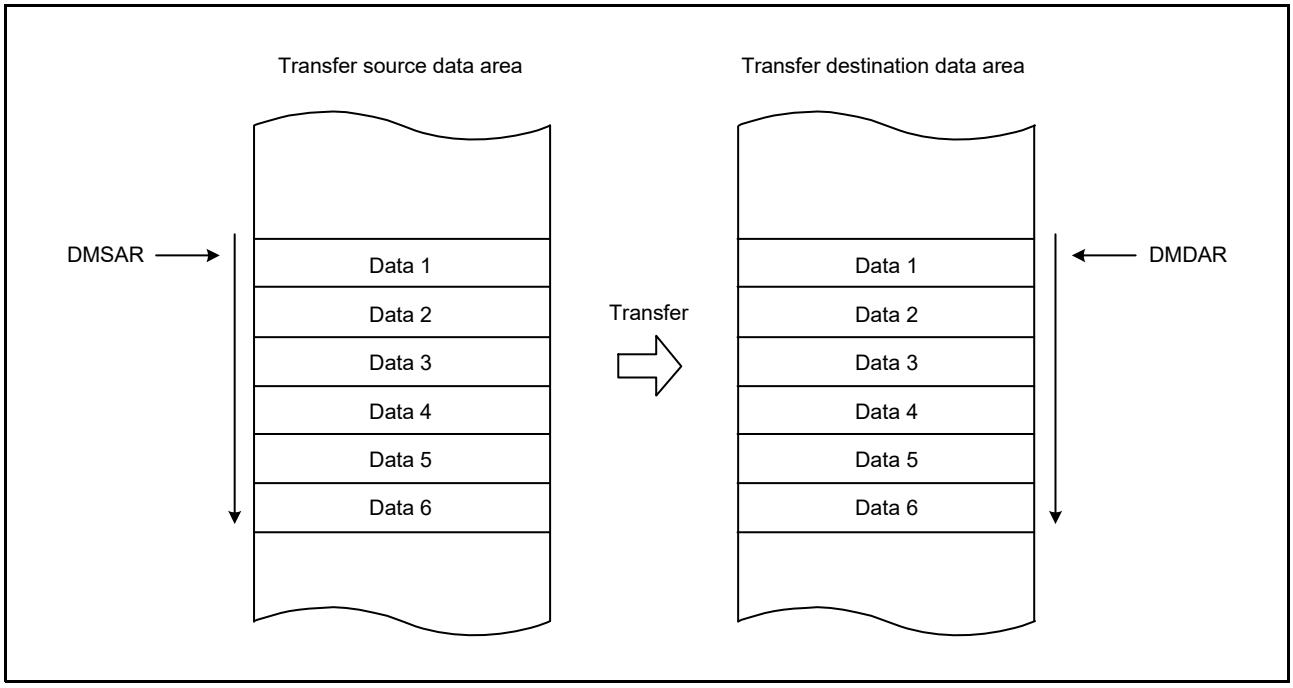

Figure 17.2 Operation in Normal Transfer Mode

(2) Repeat Transfer Mode

In repeat transfer mode, one data is transferred by one transfer request.
A maximum of 1K data can be set as a total repeat transfer size using DMCRA of the DMACm.
A maximum of 1K can be set as the number of repeat transfer operations using DMCRB of the DMACm; therefore, a maximum of 1M data (1K data × 1K count of repeat transfer operations) can be set as a total data transfer size.
Either the transfer source or transfer destination can be specified as a repeat area. When transfer of the repeat size data is completed, the address of the specified repeat area (DMSAR or DMDAR of the DMACm) returns to the transfer start address. When data of the specified repeat size has all been transferred in repeat transfer mode, DMA transfer can be stopped and the repeat size end interrupt can be requested. DMA transfer can be resumed by writing 1 to the DTE bit in DMCNT of DMACm in the repeat size end interrupt handling.
A transfer end interrupt request can be generated after completion of the specified number of repeat transfer operations.
Table 17.4 summarizes the register update operation in repeat transfer mode, and Figure 17.3 shows the operation in repeat transfer mode.

Table 17.4 Register Update Operation in Repeat Transfer Mode

		Update Operation after Completion of a Transfer by One Transfer Request	
Register	**Function**	**When DMACm.DMCRAL is not 1**	**When DMACm.DMCRAL is 1 (Transfer of the Last Data in Repeat Size)**
DMACm.DMSAR	Transfer source address	Increment/decrement/fixed/offset addition*1	• DMACm.DMTMD.DTS[1:0] = 00b Increment/decrement/fixed/offset addition*1 • DMACm.DMTMD.DTS[1:0] = 01b Initial value of DMACm.DMSAR • DMACm.DMTMD.DTS[1:0] = 10b Increment/decrement/fixed/offset addition*1
DMACm.DMDAR	Transfer destination address	Increment/decrement/fixed/offset addition*1	• DMACm.DMTMD.DTS[1:0] = 00b Initial value of DMACm.DMDAR • DMACm.DMTMD.DTS[1:0] = 01b Increment/decrement/fixed/offset addition*1 • DMACm.DMTMD.DTS[1:0] = 10b Increment/decrement/fixed/offset addition*1
DMACm.DMCRAH	Repeat size	Not updated	Not updated
DMACm.DMCRAL	Transfer count	Decremented by one	DMACm.DMCRAH
DMACm.DMCRB	Count of repeat transfer operations	Not updated	Decremented by one

Note 1. Offset addition can be specified only for DMAC0.

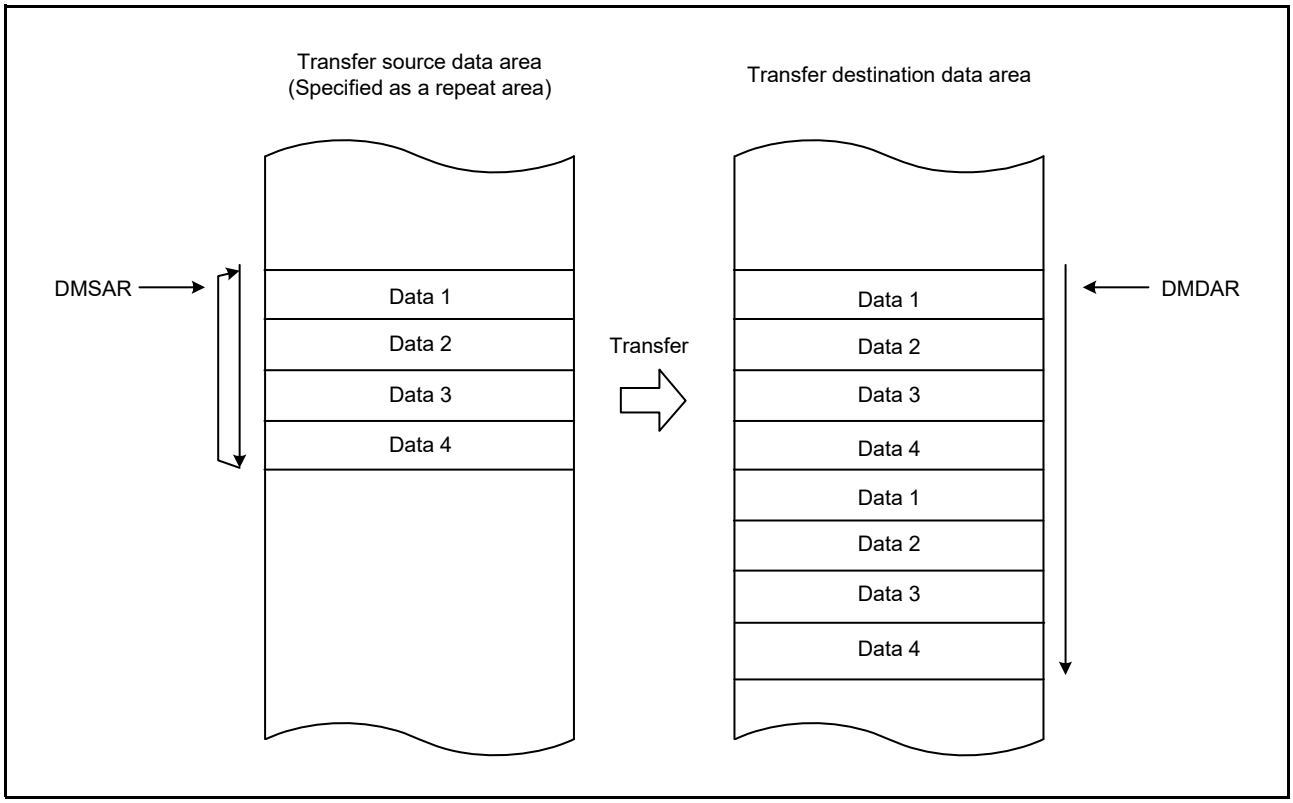

Figure 17.3 Operation in Repeat Transfer Mode

(3) Block Transfer Mode

In block transfer mode, a single block data is transferred by one transfer request.
A maximum of 1K data can be set as a total block transfer size using DMCRA of the DMACm.
A maximum of 1K can be set as the number of block transfer operations using DMCRB of the DMACm; therefore, a maximum of 1M data (1K data × 1K count of block transfer operations) can be set as a total data transfer size.
Either the transfer source or transfer destination can be specified as a block area. When transfer of a single block data is completed, the address of the specified block area (DMSAR or DMDAR of the DMACm) returns to the transfer start address. When a single block data has all been transferred in block transfer mode, DMA transfer can be stopped and the repeat size end interrupt can be requested. DMA transfer can be resumed by writing 1 to the DTE bit in DMCNT of DMACm in the repeat size end interrupt handling.
Transfer end interrupt request can be generated after completion of the specified number of block transfer operations.
Table 17.5 summarizes the register update operation in block transfer mode, and Figure 17.4 shows the operation in block transfer mode.

Table 17.5 Register Update Operation in Block Transfer Mode

Register	Function	Update Operation after Completion of Single-Block Transfer by One Transfer Request
DMACm.DMSAR	Transfer source address	• DMACm.DMTMD.DTS[1:0] = 00b Increment/decrement/fixed/offset addition*1 • DMACm.DMTMD.DTS[1:0] = 01b Initial value of DMACm.DMSAR • DMACm.DMTMD.DTS[1:0] = 10b Increment/decrement/fixed/offset addition*1
DMACm.DMDAR	Transfer destination address	• DMACm.DMTMD.DTS[1:0] = 00 b Initial value of DMACm.DMDAR • DMACm.DMTMD.DTS[1:0] = 01 b Increment/decrement/fixed/offset addition*1 • DMACm.DMTMD.DTS[1:0] = 10 b Increment/decrement/fixed/offset addition*1
DMACm.DMCRAH	Block size	Not updated
DMACm.DMCRAL	Transfer count	DMACm.DMCRAH
DMACm.DMCRB	Count of block transfer operations	Decremented by one

Note 1. Offset addition can be specified only for DMAC0.

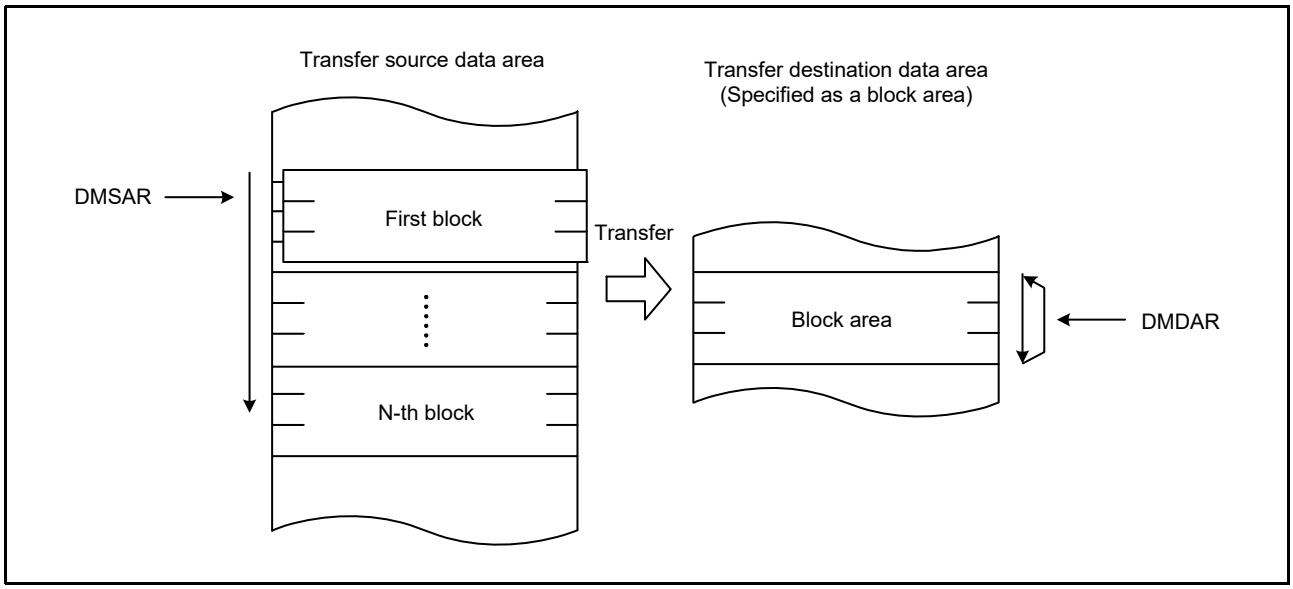

Figure 17.4 Operation in Block Transfer Mode

17.3.2 Extended Repeat Area Function

The DMAC supports a function to specify the extended repeat areas on the transfer source and destination addresses. With the extended repeat areas set, the address registers repeatedly indicate the addresses of the specified extended repeat areas.

The extended repeat areas can be specified separately to the transfer source address register (DMSAR) and transfer destination address register (DMDAR) of DMACm.

The extended repeat area on the source address is specified by the SARA[4:0] bits in DMAMD of DMACm. The extended repeat area on the destination address is specified by the DARA[4:0] bits in DMAMD of DMACm. The size can be specified separately for the source and destination sides.

However, the area (of transfer source or transfer destination) which is specified as the repeat area or block area should not be specified as the extended repeat area.

When the address register value reaches the end address of the extended repeat area and the extended repeat area overflows, DMA transfer is stopped and an interrupt by an extended repeat area overflow can be requested. When an overflow occurs in the extended repeat area on the transfer source while the SARIE bit in DMINT of DMACm is set to 1, the ESIF flag in DMSTS of DMACm is set to 1 and the DTE bit in DMCNT of DMACm is cleared to 0 to stop DMA transfer. At this time, if the ESIE bit in DMINT of DMACm is set to 1, an interrupt by an extended repeat area overflow is requested. When the DARIE bit in DMINT of DMACm is set to 1, the destination address register becomes a target to apply the function. DMA transfer can be resumed by writing 1 to the DTE bit in DMCNT of DMACm in the interrupt handling.

Figure 17.5 shows an example of the extended repeat area operation.

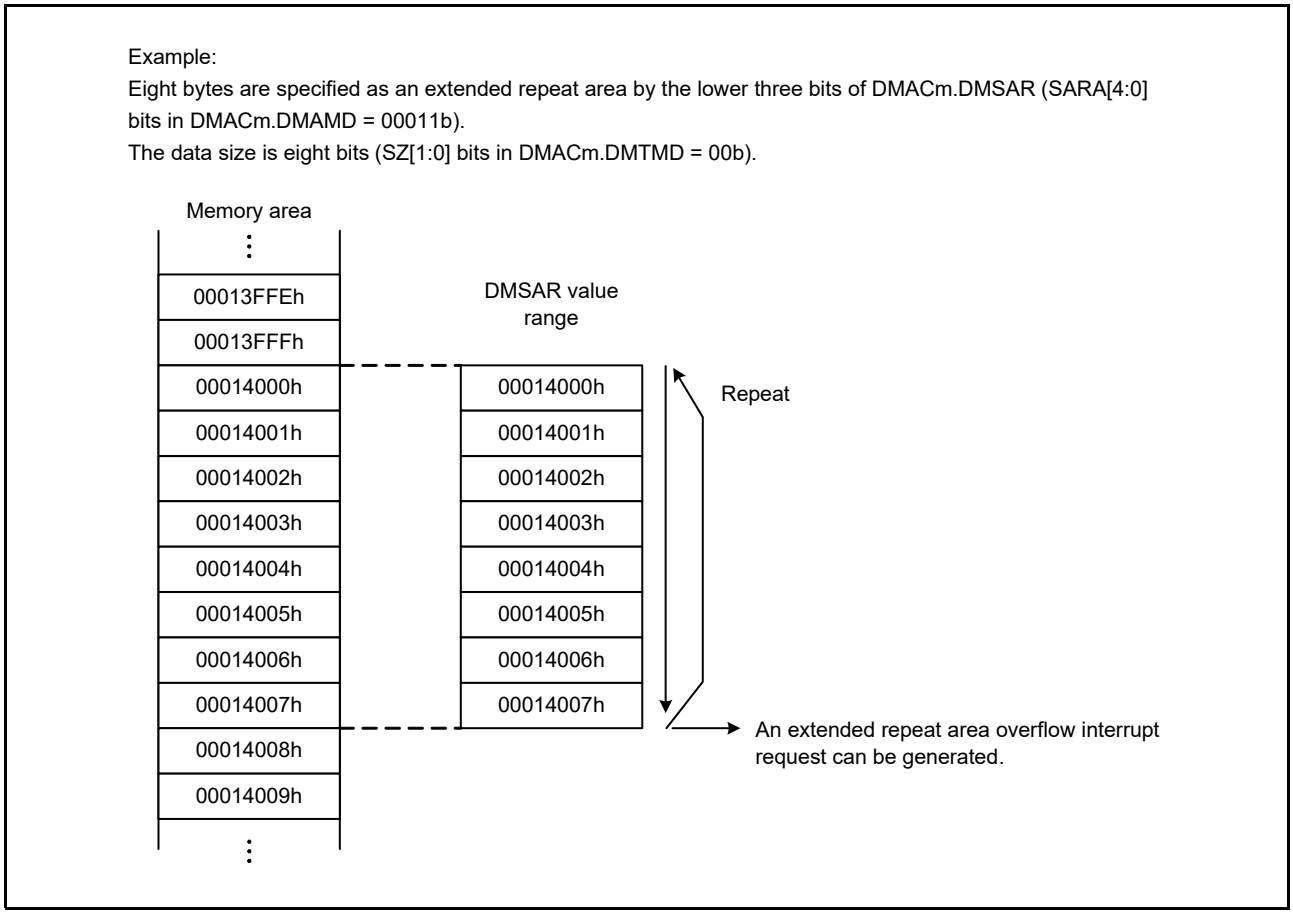

Figure 17.5 Example of Extended Repeat Area Operation

When an interrupt by an extended repeat area overflow is used in block transfer mode, the following should be taken into consideration.

When a transfer is stopped by an interrupt by an extended repeat area overflow, the address register must be set so that the block size is a power of 2 or the block size boundary is aligned with the extended repeat area boundary. When an overflow on the extended repeat area occurs during a transfer of one block, the interrupt by the overflow is suspended until transfer of the block is completed, and the transfer overruns.

Figure 17.6 shows an example when the extended repeat area function is used in block transfer mode.

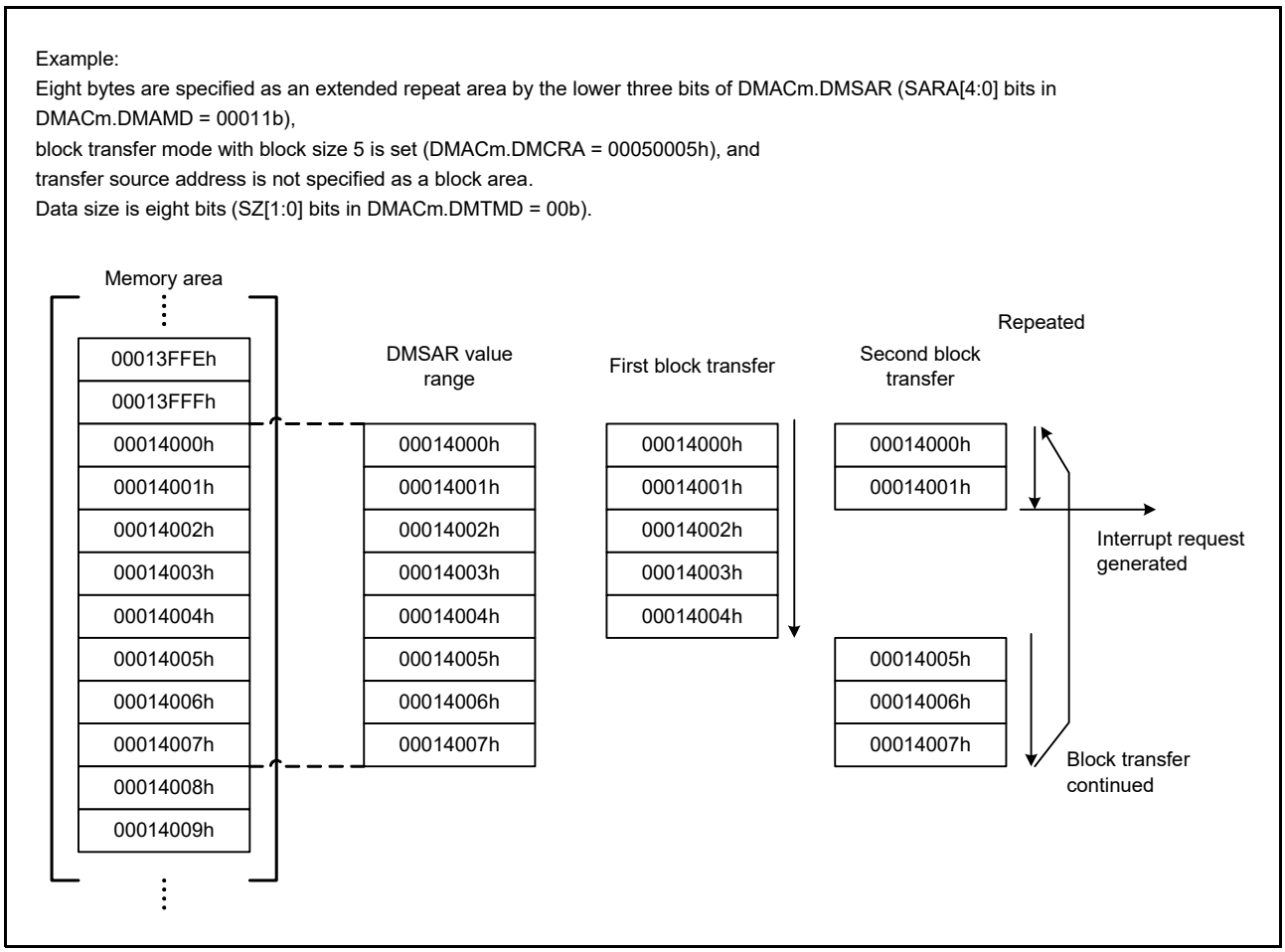

Figure 17.6 Example of Extended Repeat Area Function in Block Transfer Mode

17.3.3 Address Update Function Using Offset

The source and destination addresses can be updated by fixing, increment, decrement, or offset addition. When the offset addition is selected, the offset specified by the DMA offset register (DMOFR of DMAC0) is added to the address every time the DMAC performs one data transfer. This function realizes a data transfer where addresses are allocated to separated areas.

Offset subtraction can also be realized by setting a negative value in DMOFR of DMAC0. In this case, the negative value must be 2's complement.

Address update function using offset can be specified only for the DMAC0 channel.

Table 17.6 shows the address update method in each address update mode.

Table 17.6 Address Update Method in Each Address Update Mode

Address Update Mode	Settings of DMACm.DMAMD.SM[1:0] and DMACm.DMAMD.DM[1:0] for Address Update Modes	Address Update Method (for Different SZ[1:0] Settings in DMTMD of DMACm)		
		SZ[1:0] = 00b	SZ[1:0] = 01b	SZ[1:0] = 10b
Address fixed	00b	Fixed		
Offset addition	01b	+DMACm.DMOFR*1		
Increment	10b	+1	+2	+4
Decrement	11b	–1	–2	–4

Note 1. When setting a negative value in the DMA offset register, the value must be 2's complement. The 2's complement is obtained by the following formula.
2's complement of a negative offset value = ~ (offset) + 1 (~: bit inversion)

(1) Basic Transfer Using Offset Addition

Figure 17.7 shows an example of address updating using offset addition.

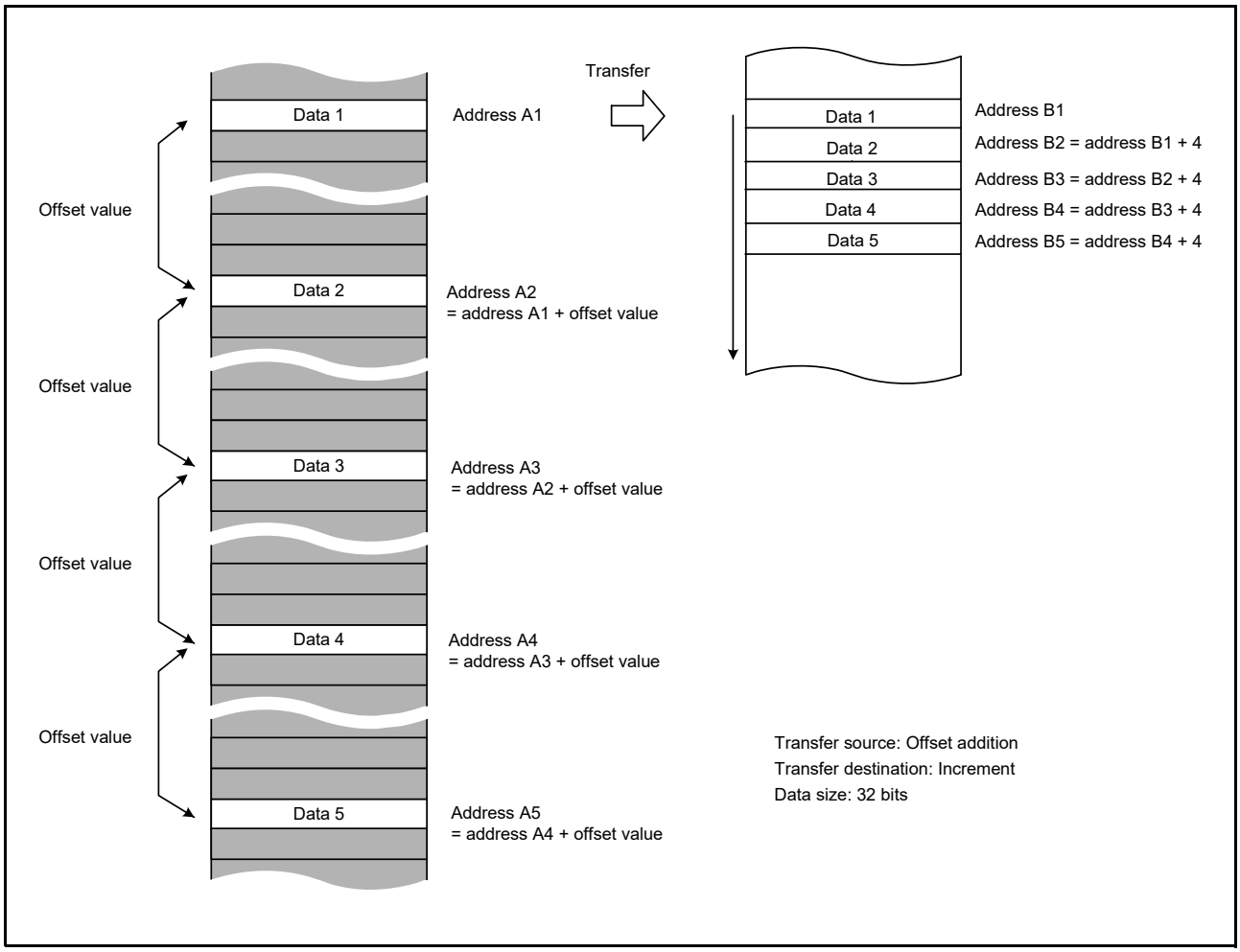

Figure 17.7 Example of Address Updating by Offset Addition

In Figure 17.7, the transfer data is 32 bits long, and offset addition and increment are set as the transfer source address update mode and transfer destination address update mode, respectively. The second and subsequent data is each read from the transfer source address obtained by adding the offset value to the previous address. The data read from the addresses at the specified intervals is written to the continuous locations on the destination.

(2) Example of XY Conversion Using Offset Addition

Figure 17.8 shows the XY conversion using offset addition in repeat transfer mode.
Settings are as follows:

- DMAC0.DMAMD: Transfer source address update mode: Offset addition
- DMAC0.DMAMD: Transfer destination address update mode: Destination address is incremented.
- DMAC0.DMTMD: Transfer data size select: 32 bits
- DMAC0.DMTMD: Transfer mode select: Repeat transfer
- DMAC0.DMTMD: Repeat area select: The source is specified as the repeat area.
- DMAC0.DMOFR: Offset address: 10h
- DMAC0.DMCRA: Repeat size: 4h
- DMAC0.DMINT: The repeat size end interrupt is enabled.

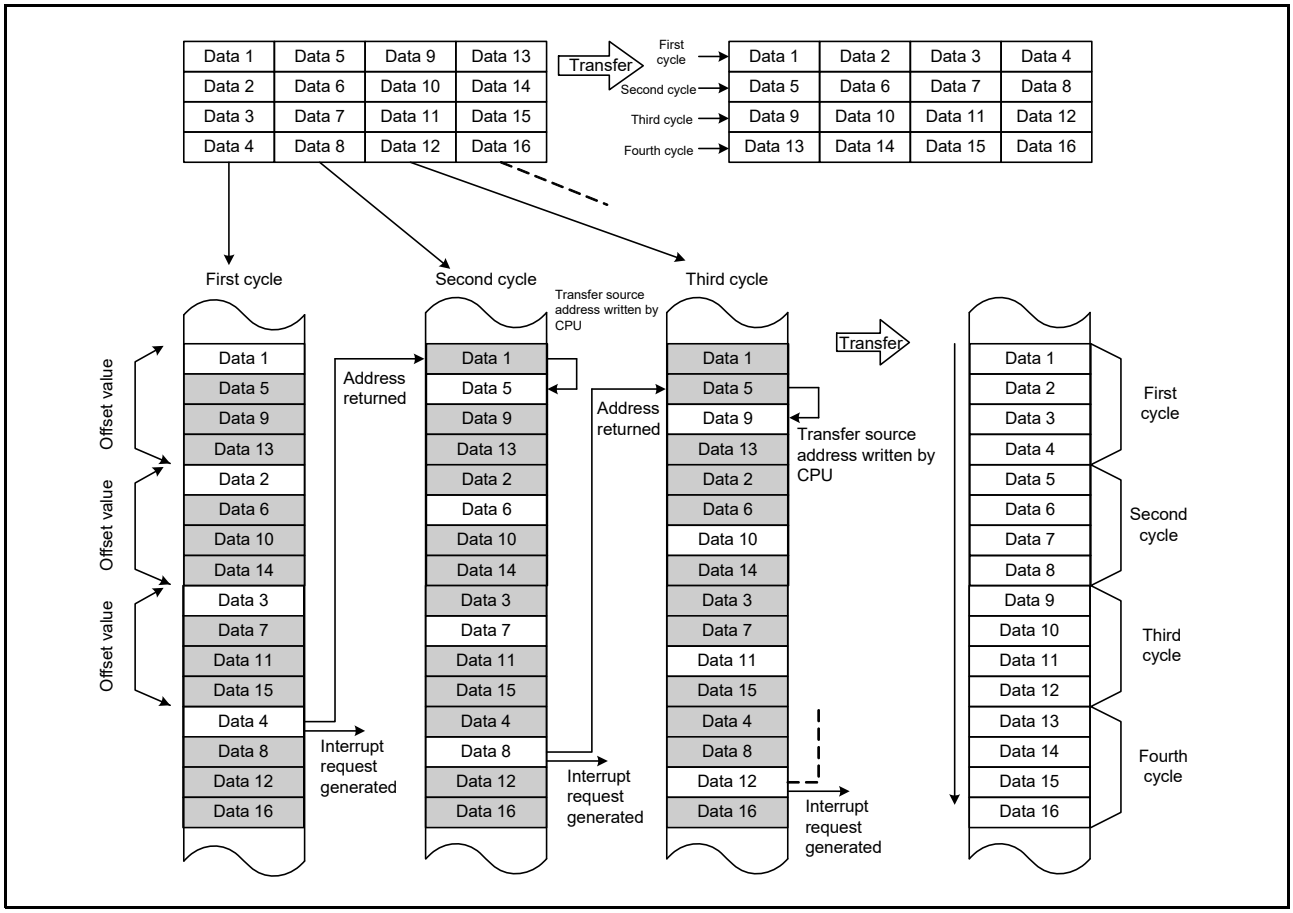

Figure 17.8 XY Conversion Operation Using Offset Addition in Repeat Transfer Mode

When a transfer starts, the offset value is added to the transfer source address every time data is transferred. The transfer data is written to the destination continuous addresses. When data 4 is transferred, which means that the repeat size of transfers is completed, the transfer source address returns to the transfer start address (address of data 1 on the transfer source) and a repeat size end interrupt is requested. While this interrupt stops the transfer temporarily, perform the following.

- DMAC0.DMSAR: Rewrite the DMA transfer source address to the address of data 5
  (with the above example, the data 1 address + 4).
- DMAC0.DMCNT: Set the DTE bit to 1.

The DMA transfer is resumed from the state when the DMA transfer is stopped. After that, the operations described above are repeated until the transfer source data is transposed to the destination area (XY conversion).

Figure 17.9 shows a flowchart of the XY conversion.

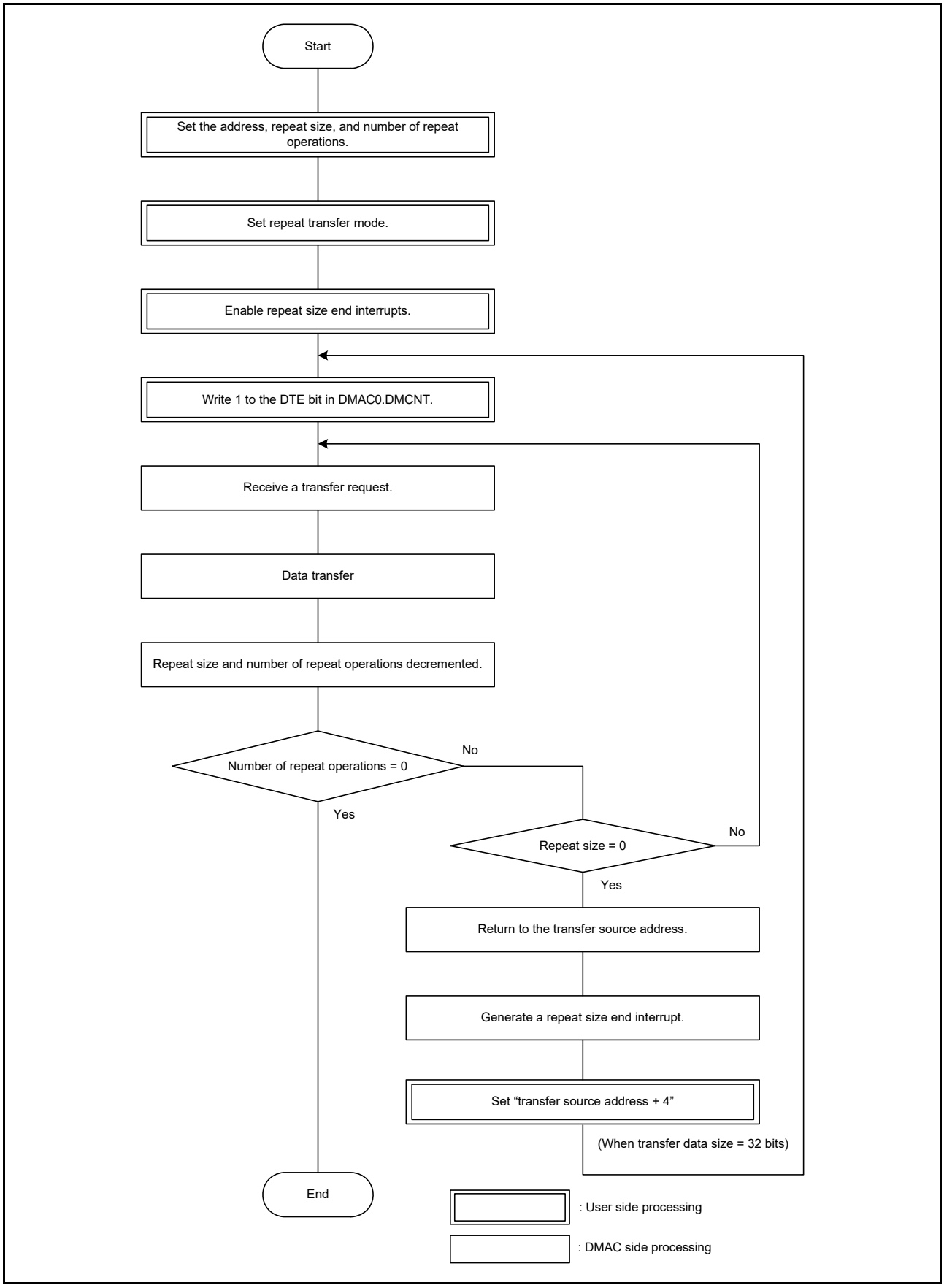

Figure 17.9 XY Conversion Flowchart Using Offset Addition in Repeat Transfer Mode

17.3.4 Activation Sources

Software, the interrupt requests from the peripheral modules, and the external interrupt requests can be specified as the DMAC activation sources. Setting the DCTG[1:0] bits in DMTMD of DMACm selects the activation source.

(1) DMAC Activation by Software

Setting the DCTG[1:0] bits in DMTMD of DMACm to 00b enables the DMAC activation by software.
To start DMA transfer by software, set the DCTG[1:0] bits in DMTMD of DMACm to 00b, and then set the DTE bit in DMCNT of DMACm to 1 (DMA transfer is enabled) and the SWREQ bit in DMREQ of DMACm to 1 (DMA transfer is requested) with the DMST bit in DMAST set to 1 (DMAC activation enabled).
When the DMAC is activated by software while the CLRS bit in DMREQ of DMACm is 0, the SWREQ bit in DMREQ of DMACm is cleared to 0 after data transfer is started in response to a DMA transfer request.
When the DMAC is activated by software while the CLRS bit is 1, the SWREQ bit is not cleared to 0 after data transfer is started. In this case, a DMA transfer request is issued again after completion of a transfer.

(2) DMAC Activation by Interrupt Requests from On-Chip Peripheral Modules or External Interrupt Requests

Interrupt requests from the on-chip peripheral modules and external interrupt requests can be specified as the DMAC activation sources. The activation source can be selected separately for each channel using the DMRSRm registers (m = 0 to 3) of the ICU.
The DMAC is activated when an interrupt request from the on-chip peripheral module or an external interrupt request is generated while the DCTG[1:0] bits in DMTMD of DMACm is set to 01b (interrupts from the peripheral modules and the external interrupt pins are selected), the DTE bit in DMCNT of DMACm is set to 1 (DMA transfer is enabled), and the DMST bit in DMAST is set to 1 (DMAC activation is enabled).

For interrupt requests specified as DMAC activation sources, see Table 14.3, Interrupt Vector Table, in section 14, Interrupt Controller (ICUb).

17.3.5 Operation Timing

Figure 17.10 and Figure 17.11 show DMAC operation timing examples.

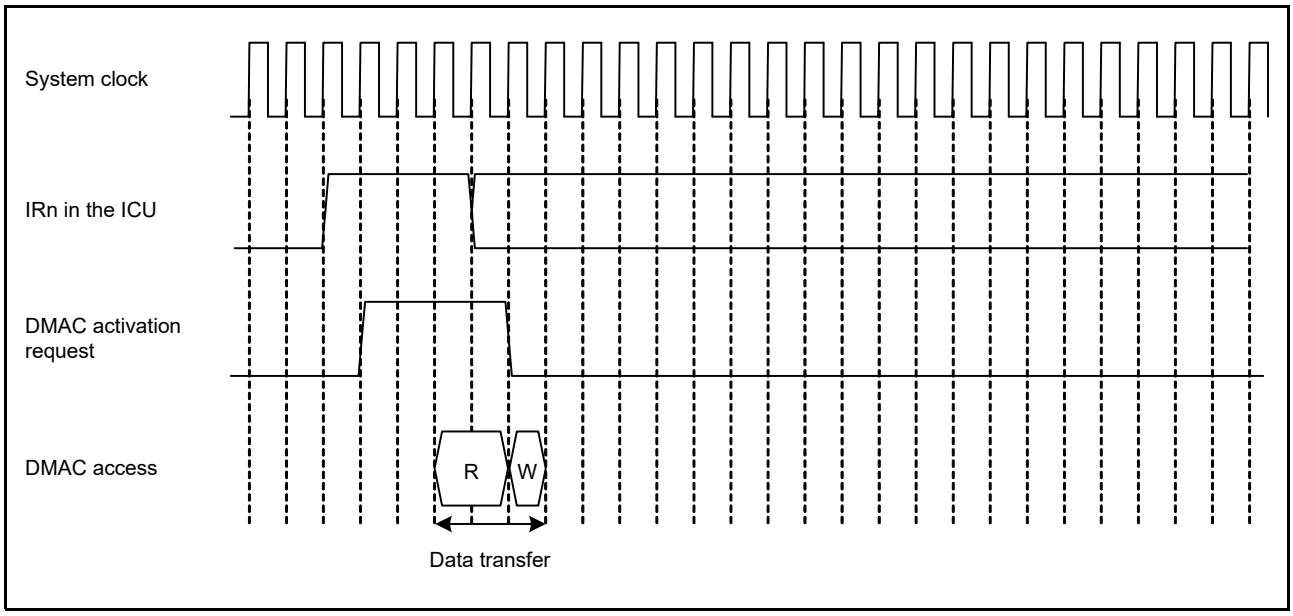

Figure 17.10 DMAC Operation Timing Example (1) (DMA Activation by Interrupt from Peripheral Module/ External Interrupt Input Pin, Normal Transfer Mode, Repeat Transfer Mode)

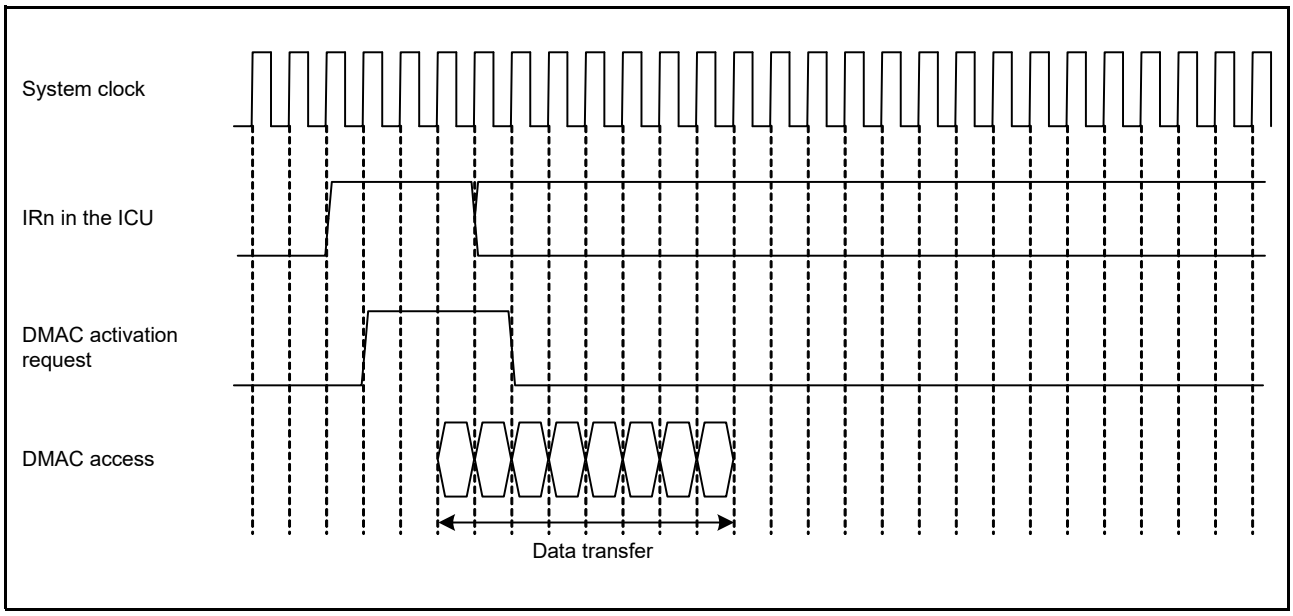

Figure 17.11 DMAC Operation Timing Example (2) (DMA Activation by Interrupt from Peripheral Module/ External Interrupt Input Pin, Block Transfer Mode, Block Size = 4)

17.3.6 DMAC Execution Cycles

Table 17.7 lists execution cycles in one DMAC data transfer operation.

Table 17.7 DMAC Execution Cycles

Transfer Mode	Data Transfer (Read)	Data Transfer (Write)
Normal	Cr+1	Cw
Repeat	Cr+1	Cw
Block*1	P × Cr	P × Cw

Note 1. This is the case when the block size is 2 or more. When the block size is 1, normal transfer cycle is applied.

P: Block size (DMCRAH register setting)
Cr: Data read destination access cycle
Cw: Data write destination access cycle

Cr and Cw depend on the access destination. For the number of cycles for each access destination, see section 37, RAM, section 38, Flash Memory (FLASH), and section 5, I/O Registers.
The unit for +1 in “Data Transfer (Read)” column is one system clock cycle (ICLK).
For the operation example, see section 17.3.5, Operation Timing.

17.3.7 Activating the DMAC

Figure 17.12 shows the register setting procedure.

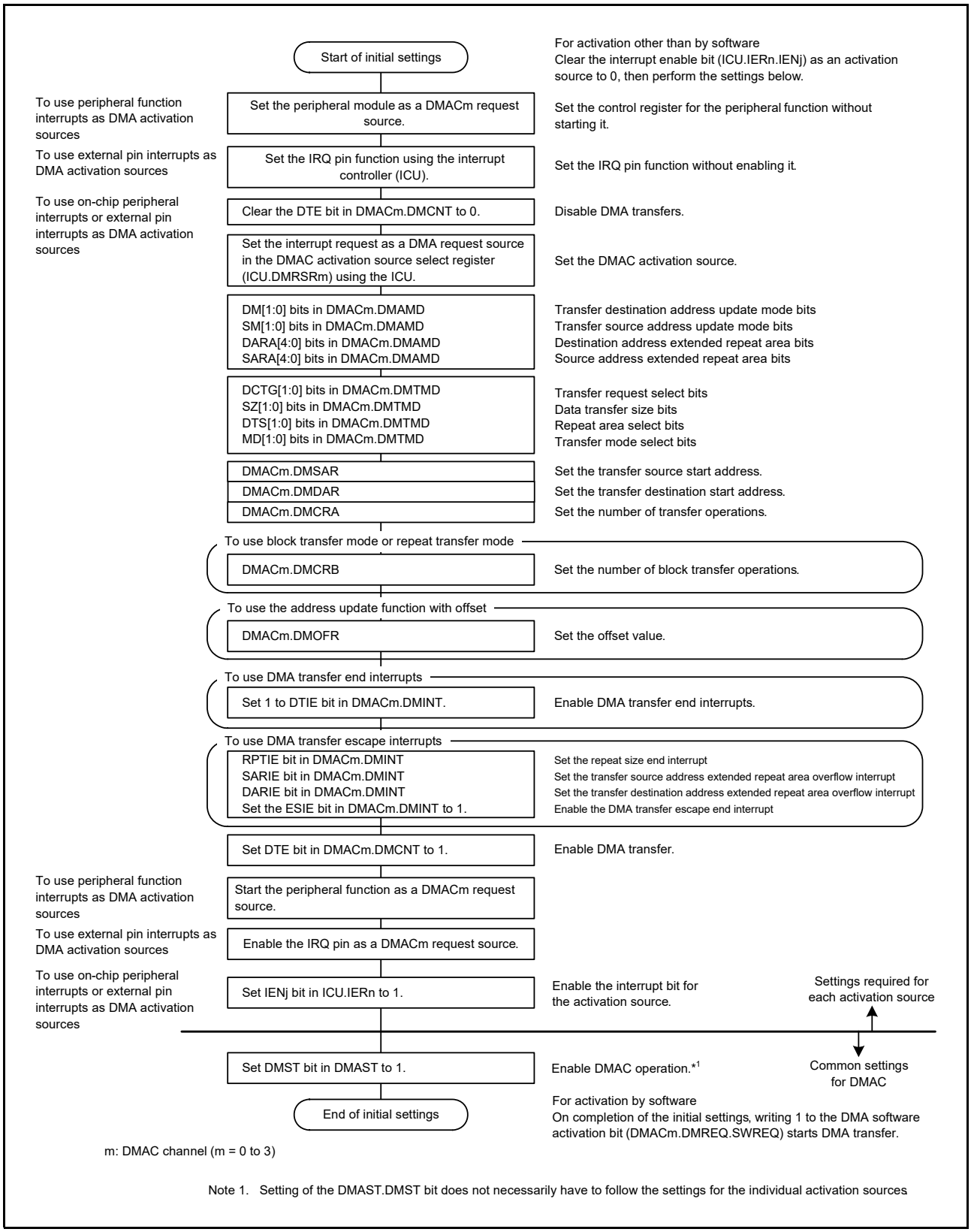

Figure 17.12 Register Setting Procedure

17.3.8 Starting DMA Transfer

Setting the DTE bit in DMCNT of DMACm to 1 (DMA transfer enabled) and setting the DMST bit in DMAST to 1 (DMAC start enabled) enable DMA transfer of channel m (m = 0 to 3).
Another activation request cannot be accepted during the transfer of other DMAC channel or DTC. When the proceeding transfer is completed, channel arbitration is performed where a DMA transfer request of the highest priority channel is accepted and DMA transfer of the channel starts. When DMA transfer starts, the ACT bit in DMSTS of DMACm is set to 1 (the DMAC is in the active state).

17.3.9 Registers during DMA Transfer

The DMAC registers are updated by a DMA transfer. The value to be updated differs according to the other settings and the transfer state. The registers to be updated are DMSAR, DMDAR, DMCRA, DMCRB, DMCNT, and DMSTS of DMACm.

(1) DMA Source Address Register (DMACm.DMSAR)

When data has been transferred in response to one transfer request, the contents of DMSAR are updated to the address to be accessed by the next transfer request.
For details on register update operation in each transfer mode, refer to Table 17.3 to Table 17.5.

(2) DMA Destination Address Register (DMACm.DMDAR)

When data has been transferred in response to one transfer request, the contents of DMDAR are updated to the address to be accessed by the next transfer request.
For details on register update operation in each transfer mode, refer to Table 17.3 to Table 17.5.

(3) DMA Transfer Count Register (DMACm.DMCRA)

When data has been transferred in response to one transfer request, the count value is updated. The update operation depends on the transfer mode selected.
For details on register update operation in each transfer mode, refer to Table 17.3 to Table 17.5.

(4) DMA Block Transfer Count Register (DMACm.DMCRB)

When data has been transferred in response to one transfer request, the count value is updated. The update operation depends on the transfer mode selected.
For details on register update operation in each transfer mode, refer to Table 17.3 to Table 17.5.

(5) DMA Transfer Enable Bit (DMACm.DMCNT.DTE)

Although the DMACm.DMCNT.DTE bit enables or disables data transfer by the register write access, it is automatically cleared to 0 by the DMAC according to the DMA transfer state.
The conditions for clearing this bit by the DMAC are as follows:

- When the specified total volume of data transfer is completed
- When DMA transfer is stopped by the repeat size end interrupt
- When DMA transfer is stopped by the extended repeat area overflow interrupt

Writing to the registers for the channels when the corresponding DMACm.DMCNT.DTE bit is set to 1 is prohibited (except for DMACm.DMCNT). In this case, writing must be performed after the bit is cleared to 0.

(6) DMA Active Flag (DMACm.DMSTS.ACT)

The ACT bit in DMSTS of DMACm indicates whether the DMACm is in the idle or active state.
This flag is set to 1 when the DMAC starts data transfer, and is cleared to 0 when data transfer in response to one transfer request is completed.
Even when DMA transfer is stopped by writing 0 to the DTE bit in DMCNT of DMACm during DMA transfer, this flag remains 1 until DMA transfer is completed.

(7) Transfer End Interrupt Flag (DMACm.DMSTS.DTIF)

The DTIF flag in DMSTS of DMACm is set to 1 after DMA transfer of the total transfer size of data is completed.
When both this flag and the DTIE bit in DMINT of DMACm are set to 1, a transfer end interrupt is requested.
This flag is set to 1 when the DMA transfer bus cycle is completed and the ACT flag in DMSTS of DMACm is cleared to 0 indicating the DMA transfer end.
This flag is automatically cleared to 0 when the DTE bit in DMCNT of DMACm is set to 1 during the interrupt handling.

(8) Transfer Escape End Interrupt Flag (DMACm.DMSTS.ESIF)

The ESIF flag in DMSTS of DMACm is set to 1 when a repeat size end interrupt or extended repeat area overflow interrupt is requested. When this bit and the ESIE bit in DMINT of DMACm are set to 1, a transfer escape end interrupt is requested.
This flag is set to 1 when the bus cycle of the DMA transfer having caused the interrupt request is completed and the ACT flag in DMSTS of DMACm is cleared to 0 indicating the DMA transfer end.
This flag is automatically cleared to 0 when the DTE bit in DMCNT of DMACm is set to 1 during an interrupt handling.
Before sending an interrupt request from the DMAC to the CPU or the DTC, the interrupt control register must be set.
For details, see section 14, Interrupt Controller (ICUb).

17.3.10 Channel Priority

When multiple DMA transfer requests are present, the DMAC determines the priority of channels that have DMA transfer requests.
The channel priority is fixed as channel 0 > channel 1 > channel 2 > channel 3 (channel 0: highest).
When a DMA transfer request is generated during data transfer, channel arbitration is started after the final data has been transferred, and DMA transfer of the higher-priority channel starts.

17.4 Ending DMA Transfer

The operation for ending DMA transfer depends on the transfer end conditions. When DMA transfer ends, the DTE bit in DMCNT and the ACT flag in DMSTS of DMACm are changed from 1 to 0, indicating that DMA transfer has ended.

17.4.1 Transfer End by Completion of Specified Total Number of Transfer Operations

(1) In Normal Transfer Mode (DMACm.DMTMD.MD[1:0] = 00b)

When the value of DMCRAL of DMACm changes from 1 to 0, DMA transfer ends on the corresponding channel, and the DTE bit in DMCNT of DMACm is cleared to 0 and the DTIF bit in DMSTS of DMACm is set to 1 at the same time. If the DTIE bit in DMINT of DMACm is 1 at this time, a transfer end interrupt request is issued to the CPU or the DTC.

(2) In Repeat Transfer Mode (DMACm.DMTMD.MD[1:0] = 01b)

When the value of DMCRB of DMACm changes from 1 to 0, DMA transfer ends on the corresponding channel, and the DTE bit in DMCNT of DMACm is cleared to 0 and the DTIF bit in DMSTS of DMACm is set to 1 at the same time. If the DTIE bit in DMINT of DMACm is 1 at this time, an interrupt request is issued to the CPU or the DTC.

(3) In Block Transfer Mode (DMACm.DMTMD.MD[1:0] = 10b)

When the value of DMCRB of DMACm changes from 1 to 0, DMA transfer ends on the corresponding channel, and the DTE bit in DMCNT of DMACm is cleared to 0 and the DTIF bit in DMSTS of DMACm is set to 1 at the same time. If the DTIE bit in DMINT of DMACm is 1 at this time, an interrupt request is issued to the CPU or the DTC.
Before sending an interrupt request from the DMAC to the CPU or the DTC, the interrupt control register must be set. For details, see section 14, Interrupt Controller (ICUb).

17.4.2 Transfer End by Repeat Size End Interrupt

In repeat transfer mode, a repeat size end interrupt is requested when transfer of a 1-repeat size of data is completed while the RPTIE bit in DMINT of DMACm is set to 1. When the interrupt is requested to complete DMA transfer, the DTE bit in DMCNT of DMACm is cleared to 0 and the ESIF flag in DMSTS of DMACm is set to 1. If the ESIE bit in DMINT of DMACm is 1 at this time, an interrupt request is issued to the CPU or the DTC. Here, the transfer can be resumed by writing 1 to the DTE bit in DMCNT of DMACm.
A repeat size end interrupt can be requested also in block transfer mode. In block transfer mode, the interrupt is requested in the same way as in repeat transfer mode when transfer of a 1-block size data is completed.
Before sending an interrupt request from the DMAC to the CPU or the DTC, the interrupt control register must be set. For details, see section 14, Interrupt Controller (ICUb).

17.4.3 Transfer End by Interrupt on Extended Repeat Area Overflow

When an overflow on the extended repeat area occurs while the extended repeat area is specified and the SARIE or DARIE bit in DMINT of DMACm is set to 1, an interrupt by an extended repeat area overflow is requested. When the interrupt is requested, the DMA transfer is terminated, the DTE bit in DMCNT of DMACm is cleared to 0, and the ESIF flag in DMSTS of DMACm is set to 1. If the ESIE bit in DMINT of DMACm is 1 at this time, an interrupt request is issued to the CPU or the DTC.

Even if an interrupt by an extended repeat area overflow is requested during a read cycle, the following write cycle is performed.

In block transfer mode, even if an interrupt by an extended repeat area overflow is requested during a 1-block transfer, the remaining data in the block is transferred; transfer is terminated after a block transfer.

Before sending an interrupt request from the DMAC to the CPU or the DTC, the interrupt control register must be set. For details, see section 14, Interrupt Controller (ICUb).

17.5 Interrupts

Each DMAC channel can output an interrupt request to the CPU or the DTC after transfer in response to one request is completed. When the transfer destination is the on-chip peripheral bus, an interrupt request is generated upon completion of data write to the write buffer not to the actual transfer destination.

Table 17.8 lists the relation among the interrupt sources, the interrupt status flags, and the interrupt enable bits. Figure 17.13 shows the schematic logic diagram of interrupt outputs. Figure 17.14 shows the DMAC interrupt handling routine to resume or terminate DMA transfer.

Table 17.8 Relation among Interrupt Sources, Interrupt Status Flags, and Interrupt Enable Bits

Interrupt Sources		Interrupt Enable Bits	Interrupt Status Flags	Request Output Enable Bits
Transfer end		—	DMACm.DMSTS.DTIF	DMACm.DMINT.DTIE
Escape transfer end	Repeat size end	DMACm.DMINT.RPTIE	DMACm.DMSTS.ESIF	DMACm.DMINT.ESIE
	Source address extended repeat area overflow	DMACm.DMINT.SARIE		
	Destination address extended repeat area overflow	DMACm.DMINT.DARIE		

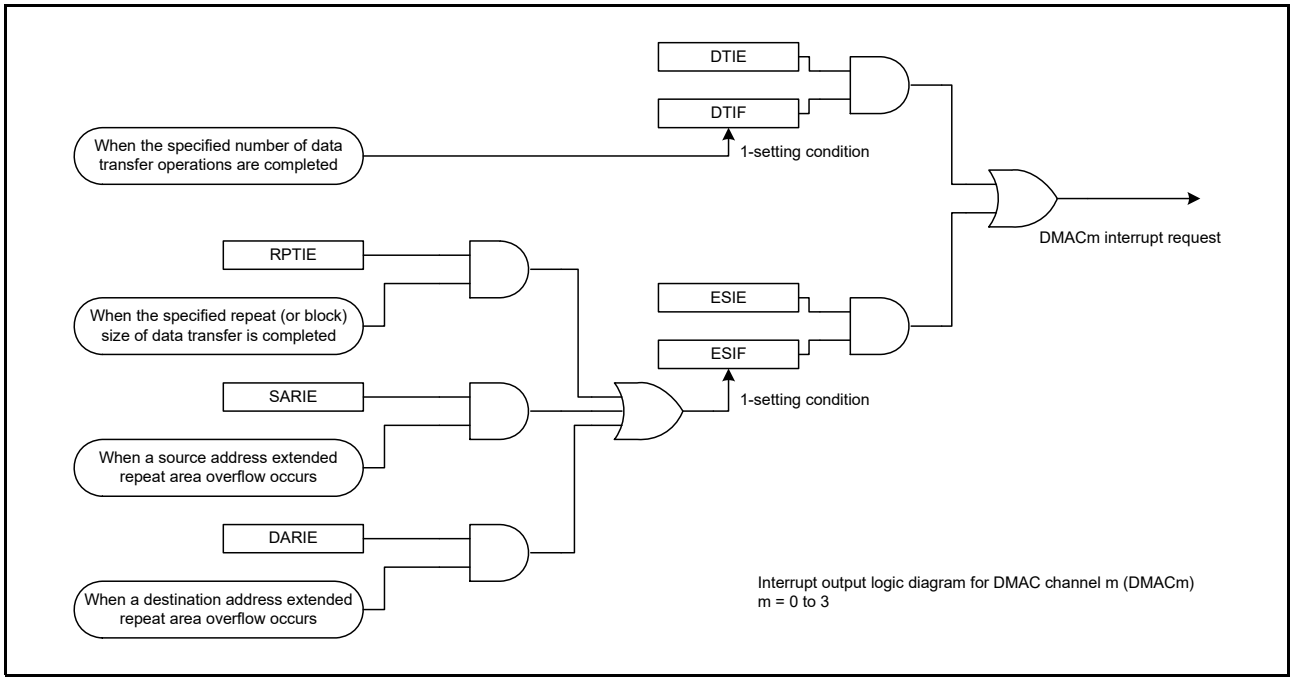

Figure 17.13 Schematic Logic Diagram of Interrupt Outputs

Specifically, the different procedures are used for canceling an interrupt to restart DMA transfer in the following two cases: (1) discontinuing or terminating DMA transfer and (2) continuing DMA transfer.

(1) When Discontinuing or Terminating DMA Transfer

Write 0 to the DTIF bit in DMSTS of DMACm to clear a transfer end interrupt, and to the ESIF bit in DMSTS of DMACm to clear a repeat size interrupt and an extended repeat area overflow interrupt. The DMACm remains in the stop state. When starting another DMA transfer after that, set the appropriate registers, and set the DTE bit in DMCNT of DMACm to 1 (DMA transfer enabled).

(2) When Continuing DMA Transfer

Write 1 to the DTE bit in DMCNT of DMACm. The ESIF bit in DMSTS of DMACm is automatically cleared to 0 (interrupt source cleared), and DMA transfer is resumed.

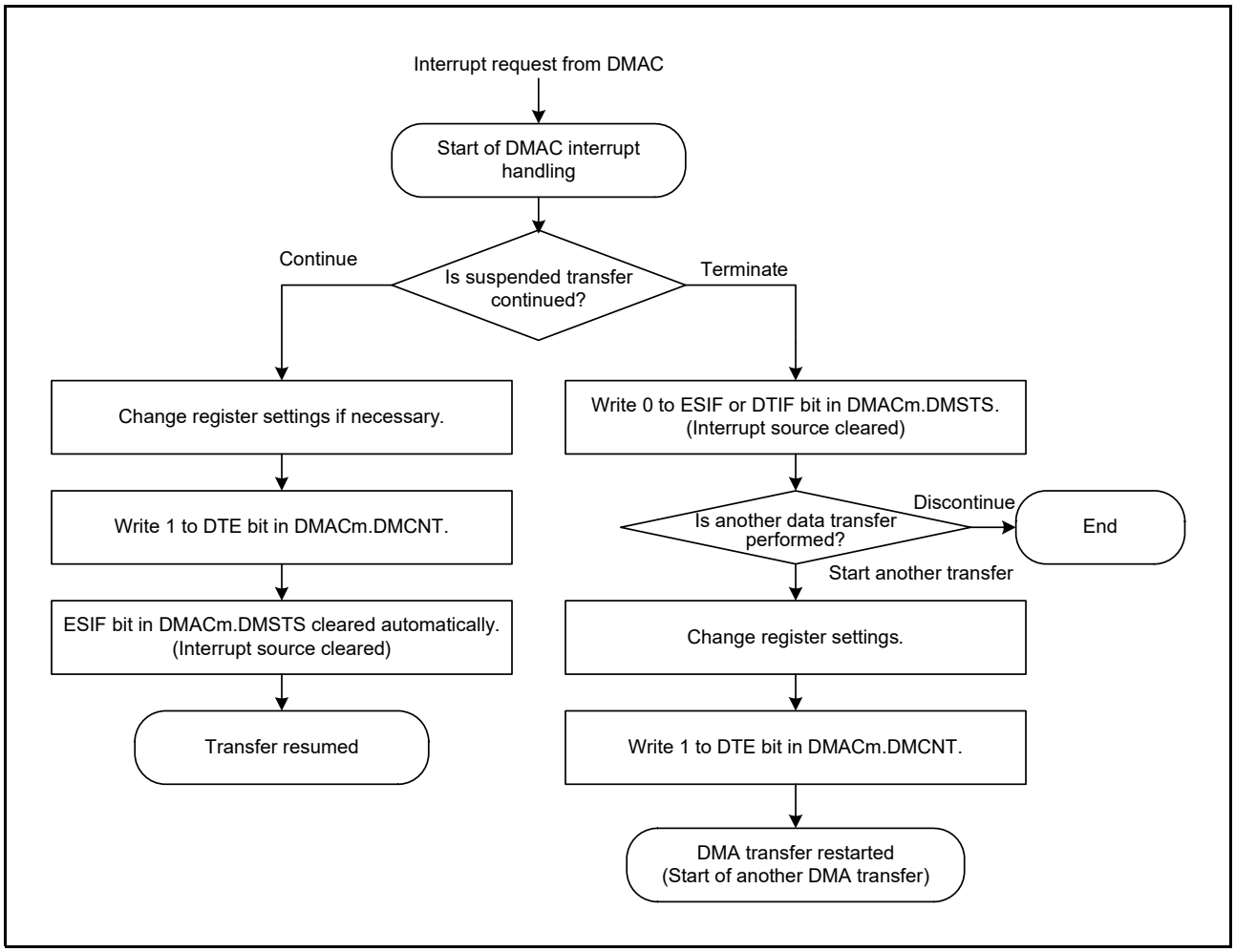

Figure 17.14 DMAC Interrupt Handling Routine to Resume/Terminate DMA Transfer

17.6 Event Link Function

Each DMAC channel outputs an event link request signal each time the channel completes data transfer (or block transfer in block transfer mode). However, when the transfer destination is the internal peripheral bus, an event link request signal is generated when the write to the write buffer is accepted.

17.7 Low Power Consumption Function

Before transition to the module stop state or software standby mode, clear the DMAST.DMST bit to 0 (DMAC activation is disabled), and then perform the following.

(1) Module Stop Function

Writing 1 to the MSTPA28 bit (transition to the module-stop state) in MSTPCRA enables the module-stop function of the DMAC. If DMA transfer is in progress at the time 1 is written to the MSTPA28 bit, the transition to the module-stop state proceeds after DMA transfer has ended. While the MSTPA28 bit is 1, accessing the DMAC registers are prohibited. Writing 0 to the MSTPA28 bit releases the DMAC from the module-stop state.

(2) Software Standby

Make settings in accord with the procedure under section 11.6.3.1, Entry to Software Standby Mode in section 11, Low Power Consumption.
If DMA transfer operations are in progress at the time the WAIT instruction is executed, the transition to software standby follows the completion of DMA transfer.

(3) Note on Low Power Consumption Function

For the WAIT instruction and the register setting procedure, see section 11.7.5, Timing of WAIT Instructions in section 11, Low Power Consumption.
To perform DMA transfer after returning from low power consumption mode, set the DMST bit in DMAST to 1 again.
To use a request that is generated in software standby mode as an interrupt request to the CPU but not as a DMAC startup request, specify the CPU as the interrupt request destination in accordance with the description in section 14.4.3, Selecting Interrupt Request Destinations in section 14, Interrupt Controller (ICUb), and then execute the WAIT instruction.

17.8 Usage Notes

17.8.1 DMA Transfer to Peripheral Modules

In DMA transfer to a peripheral module, the ACT bit in DMSTS of DMACm may be cleared to 0 (DMAC transfer suspended) during the period from the beginning of the final data write to the end of the peripheral bus access.

17.8.2 Access to the Registers during DMA Transfer

The DMSAR, DMDAR, DMCRA, DMCRB, DMTMD, DMINT, DMAMD, DMOFR, and DMCSL registers of DMACm must not be accessed while the ACT bit in DMSTS of the same channel is set to 1 (DMAC active state) or the DTE bit in DMCNT of the same channel is set to 1 (DMA transfer enabled).

17.8.3 DMA Transfer to Reserved Areas

DMA transfer to the reserved areas is prohibited. If such an access is made, transfer results are not guaranteed. For details on the reserved areas, see section 4, Address Space.

17.8.4 Interrupt Request by the DMA Activation Source Flag Control Register (DMCSL) at the End of each Transfer

While the DMACm.DMCSL.DISEL bit is 1, an interrupt is issued to the CPU at the end of each transfer that has been activated by one DMA request. Unlike the transfer end interrupt that the DMAC outputs or the escape end interrupt, the interrupt of this type is issued to the CPU at the end of DMA transfer without clearing the interrupt flag of the DMAC activation source to 0 by changing the interrupt request destination to the CPU. In this case, since the interrupt flag is not cleared to 0 at the end of DMAC transfer, it should be cleared to 0 by the CPU interrupt routine.
The interrupt flag is cleared when the CPU interrupt is accepted.
For the change of the settings on the interrupt flag or the interrupt request destination, see section 14, Interrupt Controller (ICUb). For the DMACm.DMCSL.DISEL bit setting, see section 17.2.12, DMA Activation Source Flag Control Register (DMCSL).

17.8.5 Setting of DMAC Activation Source Select Register of the Interrupt Controller (ICU.DMRSRm)

The DMAC activation source select register (ICU.DMRSRm) should be set while the DMA transfer enable bit (DMACm.DMCNT.DTE) is cleared to 0 (DMA transfer is disabled). Moreover, the DTC activation enable register (ICU.DTCERm) that corresponds to the same vector number that has been set by the ICU.DMRSRm register should not be set to 1. For details on the ICU.DTCERn and ICU.DMRSRm, see section 14, Interrupt Controller (ICUb).

17.8.6 Suspending or Restarting DMA Activation

To suspend a DMA activation request, write 0 to the interrupt enable bit for the activation source (ICU.IERn.IENj bit). To restart the DMA transfer, write 1 to the ICU.IERn.IENj bit with the setting shown in section 17.3.7, Activating the DMAC.

18. Data Transfer Controller (DTCa)

This MCU incorporates a data transfer controller (DTC).
The DTC is triggered by an interrupt request to perform data transfers.

18.1 Overview

Table 18.1 lists the specifications of the DTC, and Figure 18.1 shows a block diagram of the DTC.

Table 18.1 DTC Specifications

Item	Description
Number of transfer channels	• The same number as all interrupt sources that can start the DTC transfer.
Transfer modes	• Normal transfer mode A single transfer request leads to a single data transfer. • Repeat transfer mode A single transfer request leads to a single data transfer. The transfer address is returned to the transfer start address after the number of data transfers corresponding to “repeat size”. The maximum number of repeat transfers is 256, and the maximum data transfer size is 256 × 32 bits, 1024 bytes. • Block transfer mode A single transfer request leads to the transfer of a single block. The maximum block size is 256 × 32 bits = 1024 bytes.
Chain transfer	• Multiple types of data transfers can sequentially be executed in response to a single request. • Either “performed only when the transfer counter becomes 0” or “every time” can be selected.
Transfer space	• In short-address mode: 16 Mbytes (Areas from 0000 0000h to 007F FFFFh and FF80 0000h to FFFF FFFFh except reserved areas) • In full-address mode: 4 Gbytes (Area from 0000 0000h to FFFF FFFFh except reserved areas)
Data transfer units	• Single data: 1 byte (8 bits), 1 word (16 bits), 1 longword (32 bits) • Single block size: 1 to 256 data
CPU interrupt source	• An interrupt request can be generated to the CPU on a request source for a data transfer. • An interrupt request can be generated to the CPU after a single data transfer. • An interrupt request can be generated to the CPU after data transfer of specified volume.
Event link function	An event link request is generated after one data transfer (for block, after one block transfer).
Read skip	Reading of the transfer information can be skipped when the same transfer is repeated.
Write-back skip	Write-back of the transferred data that is not updated can be skipped when the address of the transfer source or destination is fixed.
Low power consumption function	Module stop state can be set.

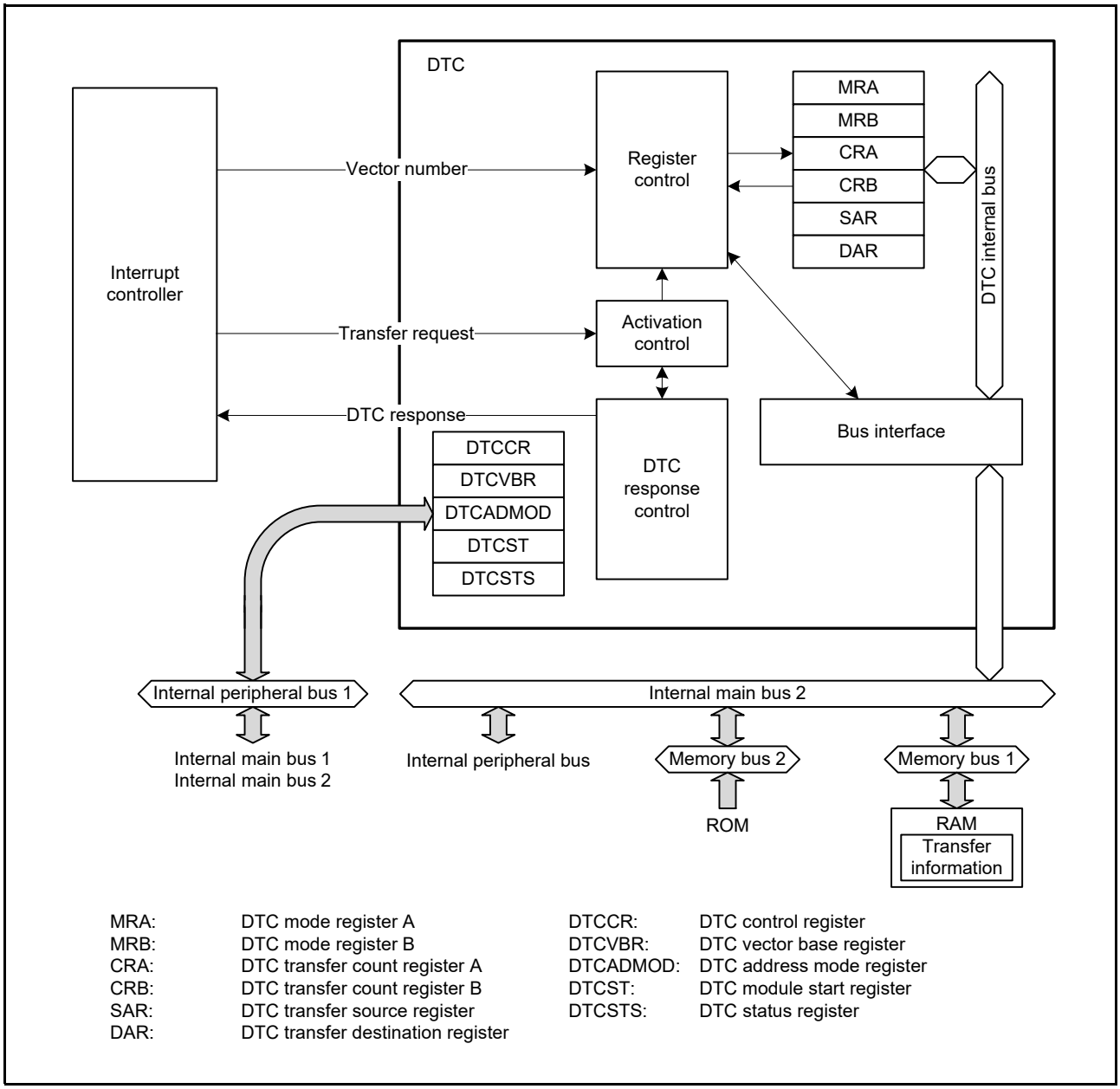

Figure 18.1 DTC Block Diagram

18.2 Register Descriptions

Registers MRA, MRB, SAR, DAR, CRA, and CRB are DTC internal registers, which cannot be directly accessed from the CPU. Values to be set in these DTC internal registers are placed in the RAM area as transfer information. When accepting a transfer request, the DTC reads the transfer information from the RAM area and sets it in the internal registers. After the data transfer ends, the values of the updated internal register are written back to the RAM area as transfer information.

18.2.1 DTC Mode Register A (MRA)

Address(es): (inaccessible directly from the CPU)

	b7	b6	b5	b4	b3	b2	b1	b0
	MD[1:0]		SZ[1:0]		SM[1:0]		—	—
Value after reset:	x	x	x	x	x	x	x	x

x: Undefined

Bit	Symbol	Bit Name	Description	R/W
b1, b0	—	Reserved	Set these bits to 0.	—
b3, b2	SM[1:0]	Transfer Source Address Addressing Mode	b3 b2 0 0: The address in the SAR register is fixed. (write-back to SAR is skipped.) 0 1: The address in the SAR register is fixed. (write-back to SAR is skipped.) 1 0: The SAR value is incremented after a data transfer. (+1 when the SZ[1:0] bits are 00b, +2 when 01b, +4 when 10b) 1 1: The SAR value is decremented after a data transfer. (–1 when the SZ[1:0] bits are 00b, –2 when 01b, –4 when 10b)	—
b5, b4	SZ[1:0]	DTC Data Transfer Size	b5 b4 0 0: Byte (8-bit) transfer 0 1: Word (16-bit) transfer 1 0: Longword (32-bit) transfer 1 1: Setting prohibited	—
b7, b6	MD[1:0]	DTC Transfer Mode Select	b7 b6 0 0: Normal transfer mode 0 1: Repeat transfer mode 1 0: Block transfer mode 1 1: Setting prohibited	—

MRA register is used to select the DTC operating mode and cannot be accessed directly from the CPU.

18.2.2 DTC Mode Register B (MRB)

Address(es): (inaccessible directly from the CPU)

	b7	b6	b5	b4	b3	b2	b1	b0
	CHNE	CHNS	DISEL	DTS	DM[1:0]		—	—
Value after reset:	x	x	x	x	x	x	x	x

x: Undefined

Bit	Symbol	Bit Name	Description	R/W
b1, b0	—	Reserved	Set these bits to 0.	—
b3, b2	DM[1:0]	Transfer Destination Address Addressing Mode	b3 b2 0 0: The address in the DAR register is fixed. (Write-back to DAR is skipped.) 0 1: The address in the DAR register is fixed. (Write-back to DAR is skipped.) 1 0: The DAR value is incremented after data transfer. (+1 when the MRA.SZ[1:0] bits are 00b, +2 when 01b, +4 when 10b) 1 1: The DAR value is decremented after data transfer. (–1 when the MRA.SZ[1:0] bits are 00b, –2 when 01b, –4 when 10b)	—
b4	DTS	DTC Transfer Mode Select	0: Transfer destination side is repeat area or block area. 1: Transfer source side is repeat area or block area.	—
b5	DISEL	DTC Interrupt Select	0: An interrupt request to the CPU is generated on completion of the specified number of data transfers. 1: An interrupt request to the CPU is generated for each data transfer.	—
b6	CHNS	DTC Chain Transfer Select	0: Chain transfer is performed on completion of each transfer. 1: Chain transfer is performed only when the transfer counter is changed from 1 to 0 or 1 to CRAH.	—
b7	CHNE	DTC Chain Transfer Enable	0: Chain transfer is disabled. 1: Chain transfer is enabled.	—

MRB register is used to select the DTC operating mode and cannot be accessed directly from the CPU.

DTS Bit (DTC Transfer Mode Select)

The DTS bit specifies the side (transfer source or destination) to be a repeat area or block area in repeat transfer mode or block transfer mode.

CHNS Bit (DTC Chain Transfer Select)

The CHNS bit selects the chain transfer condition.

When the CHNE bit is 0, setting of the CHNS bit is ignored. For details on the conditions to select the chain transfer, refer to Table 18.3, Chain Transfer Conditions.

When the next transfer is chain transfer, completion of the specified number of transfers is not determined, the interrupt status flag for the request source is not cleared, and an interrupt request to the CPU is not generated.

CHNE Bit (DTC Chain Transfer Enable)

The CHNE bit enables or disables chain transfer.

The chain transfer condition is selected by the CHNS bit.

For details of chain transfer, refer to section 18.4.6, Chain Transfer.

18.2.3 DTC Transfer Source Register (SAR)

Address(es): (inaccessible directly from the CPU)

	b31	b30	b29	b28	b27	b26	b25	b24	b23	b22	b21	b20	b19	b18	b17	b16
Value after reset:	x	x	x	x	x	x	x	x	x	x	x	x	x	x	x	x

	b15	b14	b13	b12	b11	b10	b9	b8	b7	b6	b5	b4	b3	b2	b1	b0
Value after reset:	x	x	x	x	x	x	x	x	x	x	x	x	x	x	x	x

x: Undefined

SAR register is used to set the transfer source start address.
In full-address mode, 32 bits are valid.
In short-address mode, lower 24 bits are valid and upper 8 bits (b31 to b24) are ignored. The address of this register is extended by the value specified by b23.
SAR register cannot be accessed directly from the CPU.

18.2.4 DTC Transfer Destination Register (DAR)

Address(es): (inaccessible directly from the CPU)

	b31	b30	b29	b28	b27	b26	b25	b24	b23	b22	b21	b20	b19	b18	b17	b16
Value after reset:	x	x	x	x	x	x	x	x	x	x	x	x	x	x	x	x

	b15	b14	b13	b12	b11	b10	b9	b8	b7	b6	b5	b4	b3	b2	b1	b0
Value after reset:	x	x	x	x	x	x	x	x	x	x	x	x	x	x	x	x

x: Undefined

DAR register is used to set the transfer destination start address.
In full-address mode, 32 bits are valid.
In short-address mode, lower 24 bits are valid and upper 8 bits (b31 to b24) are ignored. The address of this register is extended by the value specified by b23.
DAR register cannot be accessed directly from the CPU.

18.2.5 DTC Transfer Count Register A (CRA)

- Normal transfer mode

Address(es): (inaccessible directly from the CPU)

	CRA															
	b15	b14	b13	b12	b11	b10	b9	b8	b7	b6	b5	b4	b3	b2	b1	b0
Value after reset:	x	x	x	x	x	x	x	x	x	x	x	x	x	x	x	x

x: Undefined

- Repeat transfer mode/block transfer mode

Address(es): (inaccessible directly from the CPU)

	CRAH								CRAL							
	b15	b14	b13	b12	b11	b10	b9	b8	b7	b6	b5	b4	b3	b2	b1	b0
Value after reset:	x	x	x	x	x	x	x	x	x	x	x	x	x	x	x	x

x: Undefined

Symbol	Register Name	Description	R/W
CRAL	Transfer Counter A Lower Register	Set transfer count. This register functions as a transfer counter during data transfer.	—
CRAH	Transfer Counter A Upper Register	Set transfer count. This register functions as a reload register during data transfer.	—

Note: The function depends on transfer mode.
Note: Set CRAH and CRAL to the same value in repeat transfer mode and block transfer mode.

This register is for counting the number of transfers and cannot be accessed directly from the CPU.

(1) Normal transfer mode (MRA.MD[1:0] bits = 00b)

CRA register functions as a 16-bit transfer counter in normal transfer mode.
The transfer count is 1, 65535, and 65536 when the set value is 0001h, FFFFh, and 0000h, respectively.
The CRA value is decremented (–1) at each data transfer.

(2) Repeat transfer mode (MRA.MD[1:0] bits = 01b)

The CRAH register retains the transfer count and the CRAL register functions as an 8-bit transfer counter.
The transfer count is 1, 255, and 256 when the set value is 01h, FFh, and 00h, respectively.
The CRAL value is decremented (–1) at each data transfer. When it reaches 00h, the CRAH value is reloaded to the CRAL register.

(3) Block transfer mode (MRA.MD[1:0] bits = 10b)

The CRAH register retains the block size and the CRAL register functions as an 8-bit block size counter.
The transfer count is 1, 255, and 256 when the set value is 01h, FFh, and 00h, respectively.
The CRAL value is decremented (–1) at each data transfer. When it reaches 00h, the CRAH value is reloaded to the CRAL register.

18.2.6 DTC Transfer Count Register B (CRB)

Address(es): (inaccessible directly from the CPU)

	b15	b14	b13	b12	b11	b10	b9	b8	b7	b6	b5	b4	b3	b2	b1	b0
Value after reset:	x	x	x	x	x	x	x	x	x	x	x	x	x	x	x	x

x: Undefined

CRB register is used to set the block transfer count for block transfer mode and cannot be accessed directly from the CPU.
The transfer count is 1, 65535, and 65536 when the set value is 0001h, FFFFh, and 0000h, respectively.
The CRB value is decremented (–1) when the final data of a single block size is transferred.
When normal transfer mode or repeat transfer mode is selected, this register is not used and the set value is ignored.

18.2.7 DTC Control Register (DTCCR)

Address(es): DTC.DTCCR 0008 2400h

	b7	b6	b5	b4	b3	b2	b1	b0
	—	—	—	RRS	—	—	—	—
Value after reset:	0	0	0	0	1	0	0	0

Bit	Symbol	Bit Name	Description	R/W
b2 to b0	—	Reserved	These bits are read as 0. The write value should be 0.	R/W
b3	—	Reserved	This bit is read as 1. The write value should be 1.	R/W
b4	RRS	DTC Transfer Information Read Skip Enable	0: Transfer information read is not skipped. 1: Transfer information read is skipped when vector numbers match.	R/W
b7 to b5	—	Reserved	These bits are read as 0. The write value should be 0.	R/W

DTCCR register is used to control the DTC operation.

RRS Bit (DTC Transfer Information Read Skip Enable)

The DTC vector number is compared with the vector number in the previous data transfer.
When these vector numbers match and the RRS bit is set to 1, DTC data transfer is performed without reading the transferred information. However, when the previous transfer was chain transfer, the transferred information is read regardless of the value of the RRS bit.
Furthermore, when the transfer counter (CRA register) became 0 during the previous normal transfer and when the transfer counter (CRB register) became 0 during the previous block transfer, the transferred information is read regardless of the RRS bit value.

18.2.8 DTC Vector Base Register (DTCVBR)

Address(es): DTC.DTCVBR 0008 2404h

	b31	b30	b29	b28	b27	b26	b25	b24	b23	b22	b21	b20	b19	b18	b17	b16
Value after reset:	0	0	0	0	0	0	0	0	0	0	0	0	0	0	0	0

	b15	b14	b13	b12	b11	b10	b9	b8	b7	b6	b5	b4	b3	b2	b1	b0
Value after reset:	0	0	0	0	0	0	0	0	0	0	0	0	0	0	0	0

The DTCVBR register is used to set the base address for calculating the address to which the DTC vector is allocated. Values for the upper 4 bits (b31 to b28) cannot be written but reflect the value written to b27. The lower 10 bits are reserved and the values are fixed to 0. Write 0 to the lower 10 bits if necessary.
It can be set in the range of 0000 0000h to 07FF FC00h and F800 0000h to FFFF FC00h in 1-Kbyte units.

18.2.9 DTC Address Mode Register (DTCADMOD)

Address(es): DTC.DTCADMOD 0008 2408h

	b7	b6	b5	b4	b3	b2	b1	b0
	—	—	—	—	—	—	—	SHORT
Value after reset:	0	0	0	0	0	0	0	0

Bit	Symbol	Bit Name	Description	R/W
b0	SHORT	Short-Address Mode Set	0: Full-address mode 1: Short-address mode	R/W
b7 to b1	—	Reserved	These bits are read as 0. The write value should be 0.	R/W

DTCADMOD register is used to specify the area accessible by the DTC.

SHORT Bit (Short-Address Mode Set)

This bit is used to select address mode of registers SAR and DAR.
Full-address mode allows the DTC to access to a 4-Gbyte space (0000 0000h to FFFF FFFFh).
Short-address mode allows the DTC to access to a 16-Mbyte space (0000 0000h to 007F FFFFh and FF80 0000h to FFFF FFFFh).

18.2.10 DTC Module Start Register (DTCST)

Address(es): DTC.DTCST 0008 240Ch

	b7	b6	b5	b4	b3	b2	b1	b0
	—	—	—	—	—	—	—	DTCST
Value after reset:	0	0	0	0	0	0	0	0

Bit	Symbol	Bit Name	Description	R/W
b0	DTCST	DTC Module Start	0: DTC module stop 1: DTC module start	R/W
b7 to b1	—	Reserved	These bits are read as 0. The write value should be 0.	R/W

DTCST Bit (DTC Module Start)

Set the DTCST bit to 1 to enable the DTC to accept transfer requests. When this bit is set to 0, transfer requests are no longer accepted.

If this bit is set to 0 during data transfer, the accepted transfer request is active until the processing is completed.

Set the DTCST bit to 0 before making a transition to the module stop state, deep sleep mode, or software standby mode.

Set the DTCST bit to 1 to resume the data transfer after returning from the module stop state, deep sleep mode, or software standby mode.

For details on transitions to the module stop state, deep sleep mode, and software standby mode, refer to section 18.9, Low Power Consumption Function, and section 11, Low Power Consumption.

18.2.11 DTC Status Register (DTCSTS)

Address(es): DTC.DTCSTS 0008 240Eh

	b15	b14	b13	b12	b11	b10	b9	b8	b7	b6	b5	b4	b3	b2	b1	b0
	ACT	—	—	—	—	—	—	—	VECN[7:0]							
Value after reset:	0	0	0	0	0	0	0	0	0	0	0	0	0	0	0	0

Bit	Symbol	Bit Name	Description	R/W
b7 to b0	VECN[7:0]	DTC Active Vector Number Monitoring Flag	These bits indicate the vector number for the request source when data transfer is in progress. The value is only valid if data transfer is in progress (the value of the ACT flag is 1).	R
b14 to b8	—	Reserved	These bits are read as 0. Writing to these bits has no effect.	R
b15	ACT	DTC Active Flag	0: Data transfer is not in progress. 1: Data transfer is in progress.	R

VECN[7:0] Flags (DTC Active Vector Number Monitoring Flag)

While data transfer is in progress, these bits indicate the vector number corresponding to the request source for the transfer.

When the DTCSTS register is read, the value of the VECN[7:0] flags is valid if the value of the ACT flag was 1 (data transfer is in progress) and invalid if the value of the ACT flag was 0 (data transfer is not in progress).

For the correspondence between the DTC request sources and the vector addresses, refer to section 14.3.1, Interrupt Vector Table in section 14, Interrupt Controller (ICUb).

ACT Flag (DTC Active Flag)

This flag indicates the state of data transfer operation.

[Setting condition]

- When the data transfer is started by a transfer request.

[Clearing condition]

- When the data transfer is completed in response to a transfer request.

18.3 Request Sources

The DTC data transfer is triggered by an interrupt request. Setting the ICU.DTCERn.DTCE bit (n = interrupt vector number) to 1 selects the corresponding interrupt request as a request source for the DTC.
For the correspondence between the DTC request sources and the vector addresses, refer to section 14.3.1, Interrupt Vector Table in section 14, Interrupt Controller (ICUb). For request by software, refer to section 14.2.5, Software Interrupt Generation Register (SWINTR) in section 14, Interrupt Controller (ICUb).
Once the DTC has accepted a transfer request, it does not accept another transfer request until transfer for that single request is completed, regardless of the priority of the requests.
When multiple transfer requests are generated during data transfer by the DMAC/DTC, the request with the highest priority on completion of the current transfer is accepted. When multiple transfer requests are generated while the DTCST.DTCST bit is 0 (DTC module stop), the request with the highest priority at the moment when the bit is subsequently set to 1 (DTC module start) is accepted.

The DTC performs the following operations at the start of a single data transfer (or the last of the consecutive transfers in the case of a chain transfer).

- On completion of a specified number of data transfer, the ICU.DTCERn.DTCE bit is set to 0 and an interrupt is requested to the CPU.
- If the MRB.DISEL bit is 1, an interrupt is requested to the CPU on completion of data transfer.
- For the other transfers, the interrupt status flag of the request source is set to 0 at the start of data transfer.

18.3.1 Allocating Transfer Information and DTC Vector Table

The DTC reads the start address of the transfer information corresponding to each request source from the vector table and reads the transfer information starting at that address.
The vector table should be located so that the lower 10 bits of the base address (start address) are 0. Use the DTC vector base register (DTCVBR) to set the base address of the DTC vector table.
Transfer information is allocated in the RAM area. The start address of the transfer information n with vector number n should be allocated at DTCVBR + 4n.
Transfer information should be aligned on a 4-byte boundary. The size of a transfer information is 12 bytes in short-address mode or 16 bytes in full-address mode. Use the DTCADMOD.SHORT bit to select short-address mode (SHORT bit = 1) or full-address mode (SHORT bit = 0).
Figure 18.2 shows the relationship between the DTC vector table and transfer information.
Figure 18.3 shows the allocation of transfer information in the RAM area. The lower addresses vary according to the endian of the corresponding allocation area. For details, refer to section 18.10.2, Allocating Transfer Information.

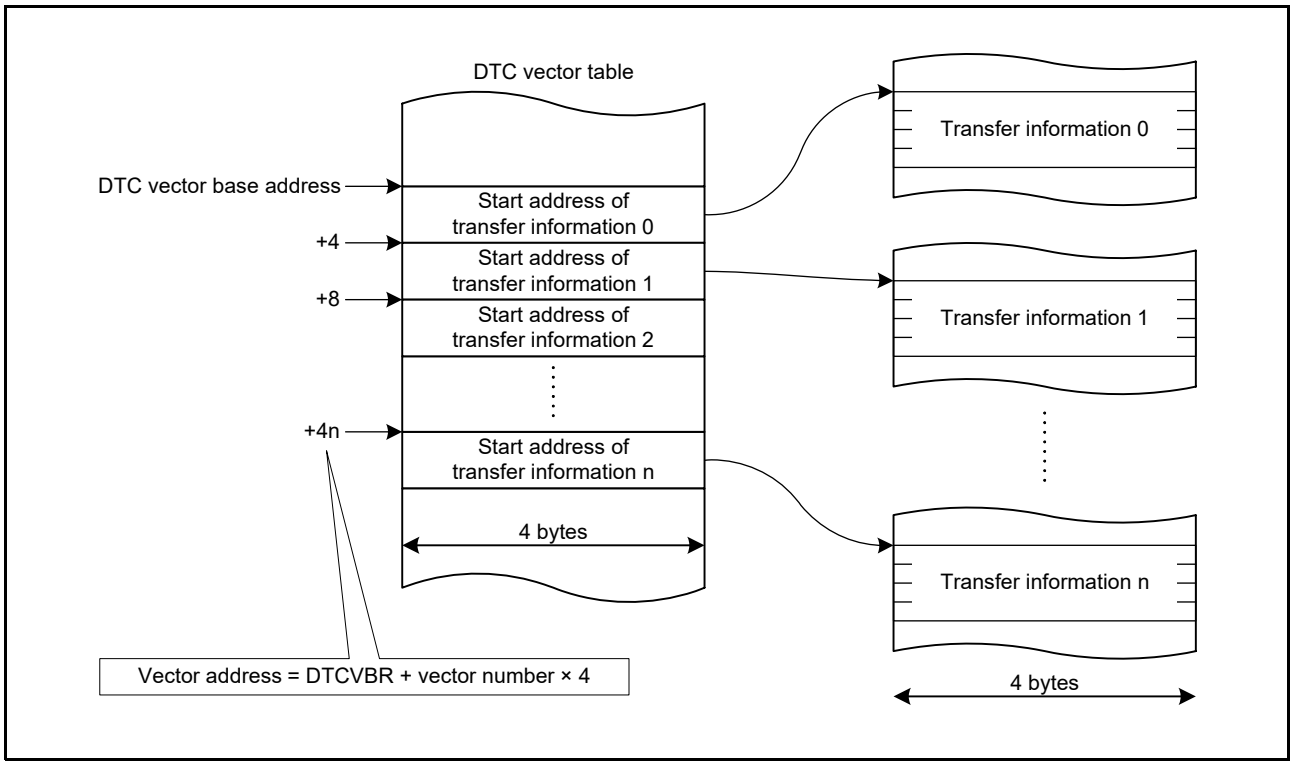

Figure 18.2 DTC Vector Table and Transfer Information

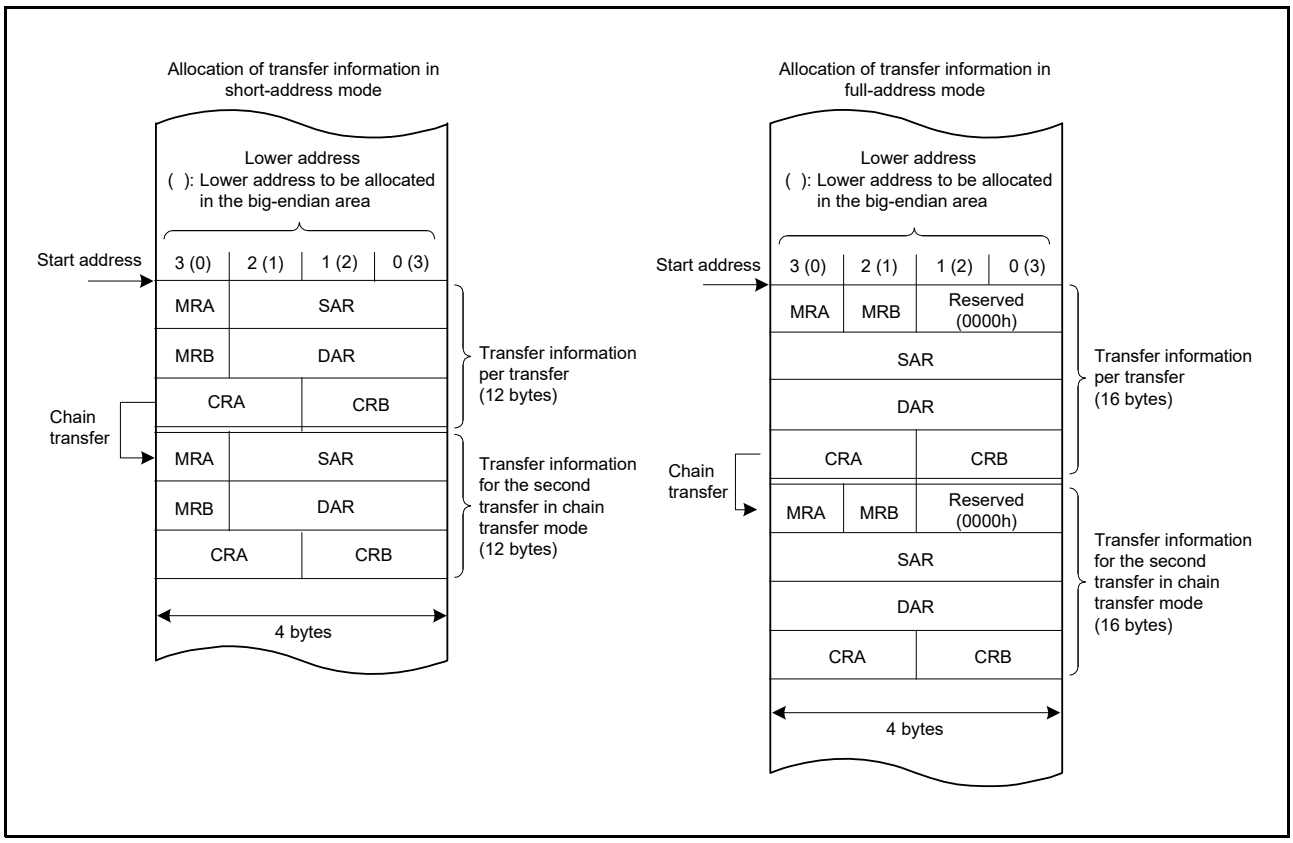

Figure 18.3 Allocation of Transfer Information in the RAM Area

18.4 Operation

The DTC transfers data in accordance with the transfer information. Storage of the transfer information in the RAM area is required before DTC operation.

When the DTC accepts a transfer request, it reads the DTC vector corresponding to the vector number. Next, the DTC reads transfer information from the address pointed by the DTC vector, transfers data, and then writes back the transfer information after the data transfer. Allocating transfer information in the RAM area allows data transfer of arbitrary number of channels.

There are three transfer modes: normal transfer mode, repeat transfer mode, and block transfer mode.

Set a transfer source address in the SAR register and a transfer destination address in the DAR register. The SAR and DAR registers are updated after the transfer according to the respective settings (increment, decrement, or fixed).

Table 18.2 lists transfer modes of the DTC.

Table 18.2 Transfer Modes of the DTC

Transfer Mode	Data Size Transferred on Single Transfer Request	Increment/Decrement of Memory Address	Settable Transfer Count
Normal transfer mode	1 byte/1 word/1 longword	Incremented/decremented by 1, 2, or 4 or address fixed	1 to 65536
Repeat transfer mode*1	1 byte/1 word/1 longword	Incremented/decremented by 1, 2, or 4 or address fixed	1 to 256*3
Block transfer mode*2	Block size specified in CRAH (1 to 256 bytes/1 to 256 words/1 to 256 longwords)	Incremented/decremented by 1, 2, or 4 or address fixed	1 to 65536

Note 1. Set transfer source or transfer destination in the repeat area.
Note 2. Set transfer source or transfer destination in the block area.
Note 3. After data transfer of the specified count, the initial state is restored and the operation is continued (repeated).

Setting the MRB.CHNE bit to 1 allows multiple transfers (chain transfer) on a single transfer request. The setting in combination with the MRB.CHNS bit enables a chain transfer when the specified number of data transfers is completed. Figure 18.4 shows the operation flowchart of the DTC. Table 18.3 lists chain transfer conditions.

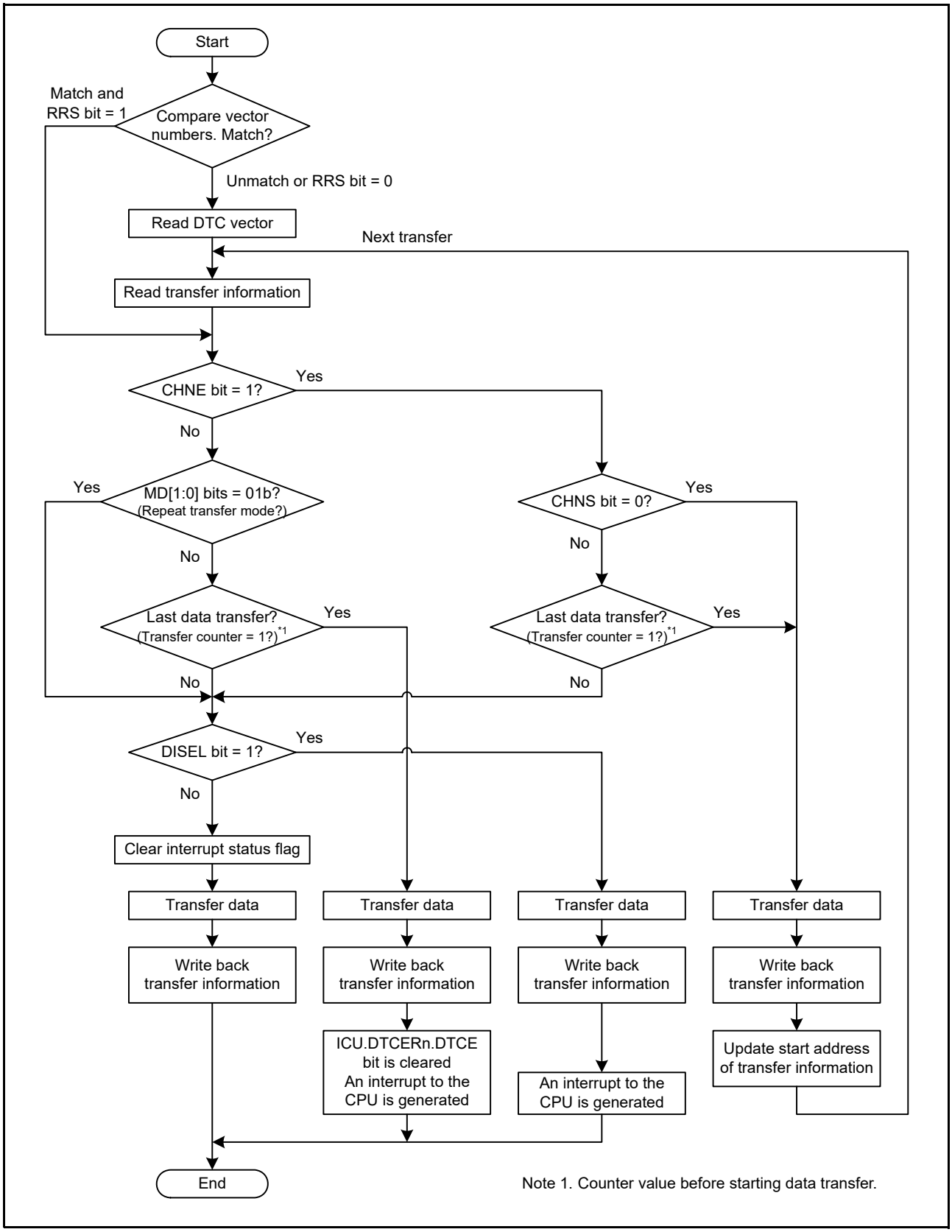

Figure 18.4 Operation Flowchart of the DTC

Table 18.3 Chain Transfer Conditions

First Transfer				Second Transfer*3				
CHNE Bit	CHNS Bit	DISEL Bit	Transfer Counter*1,*2	CHNE Bit	CHNS Bit	DISEL Bit	Transfer Counter*1,*2	Data Transfer
0	—	0	Other than (1 → 0)	—	—	—	—	Ends after the first transfer
0	—	0	(1 → 0)	—	—	—	—	Ends after the first transfer with an interrupt request to the CPU
0	—	1	—	—	—	—	—	
1	0	—	—	0	—	0	Other than (1 → 0)	Ends after the second transfer
				0	—	0	(1 → 0)	Ends after the second transfer with an interrupt request to the CPU
				0	—	1	—	
1	1	0	Other than (1 → ∗)	—	—	—	—	Ends after the first transfer
1	1	—	(1 → ∗)	0	—	0	Other than (1 → 0)	Ends after the second transfer
				0	—	0	(1 → 0)	Ends after the second transfer with an interrupt request to the CPU
				0	—	1	—	
1	1	1	Other than (1 → ∗)	—	—	—	—	Ends after the first transfer with an interrupt request to the CPU

Note 1. The transfer counters used depend on transfer modes as follows:
Normal transfer mode: CRA register
Repeat transfer mode: CRAL register
Block transfer mode: CRB register

Note 2. On completion of data transfer, the counters operate as follows:
1 → 0 in normal and block transfer modes
1 → CRAH in repeat transfer mode
(1 → ∗) in the table indicates both of the two operations above.

Note 3. Chain transfer can be selected for the second or subsequent transfers. The condition combination of “second transfer and the CHNE bit is 1” is omitted.

18.4.1 Transfer Information Read Skip Function

Reading of DTC vector and transfer information can be skipped by the setting of the DTCCR.RRS bit.
When a DTC transfer request is accepted, the current DTC vector number is compared with the DTC vector number in the previous data transfer. When these vector numbers match and the RRS bit is 1, the DTC does not read the DTC vector and transfer information, and transfers data according to the transfer information remained in the DTC.
However, when the previous transfer was chain transfer, the DTC vector and transfer information are read. Furthermore, when the transfer counter (CRA register) became 0 during the previous normal transfer and when the transfer counter (CRB register) became 0 during the previous block transfer, transfer information is read regardless of the value of the RRS bit. Figure 18.13 shows an example of transfer information read skip.
When updating the vector table and transfer information, set the RRS bit to 0, update the vector table and transfer information, and then set the RRS bit to 1. Setting the RRS bit to 0 discards the vector numbers retained in the DTC. The updated DTC vector table and transfer information are read in the next data transfer.

18.4.2 Transfer Information Write-Back Skip Function

When the MRA.SM[1:0] bits or the MRB.DM[1:0] bits are set to “address is fixed” (00b or 01b), a part of transfer information is not written back. This function is performed independently of the setting of short-address mode or full-address mode.

Table 18.4 lists transfer information write-back skip conditions and applicable registers. The CRA and CRB registers are written back independently of the setting of short-address mode or full-address mode.

Furthermore, in full-address mode, write-back of registers MRA and MRB is skipped.

Table 18.4 Transfer Information Write-Back Skip Conditions and Applicable Registers

MRA.SM[1:0] Bits		MRB.DM[1:0] Bits			
b3	b2	b3	b2	**SAR Register**	**DAR Register**
0	0	0	0	Skip	Skip
0	0	0	1		
0	1	0	0		
0	1	0	1		
0	0	1	0	Skip	Write-back
0	0	1	1		
0	1	1	0		
0	1	1	1		
1	0	0	0	Write-back	Skip
1	0	0	1		
1	1	0	0		
1	1	0	1		
1	0	1	0	Write-back	Write-back
1	0	1	1		
1	1	1	0		
1	1	1	1		

18.4.3 Normal Transfer Mode

This mode allows 1-byte, 1-word, or 1-longword data transfer on a single transfer request. The transfer count can be set to 1 to 65536.

Transfer source addresses and transfer destination addresses can be set to increment, decrement, or fixed independently.

This mode enables an interrupt request to the CPU to be generated at the end of specified-count transfer.

Table 18.5 lists register functions in normal transfer mode, and Figure 18.5 shows the memory map of normal transfer mode.

Table 18.5 Register Functions in Normal Transfer Mode

Register	Description	Value Written Back by Writing Transfer Information
SAR	Transfer source address	Increment/decrement/fixed*1
DAR	Transfer destination address	Increment/decrement/fixed*1
CRA	Transfer counter A	CRA – 1
CRB	Transfer counter B	Not updated

Note 1. Write-back operation is skipped when address is fixed.

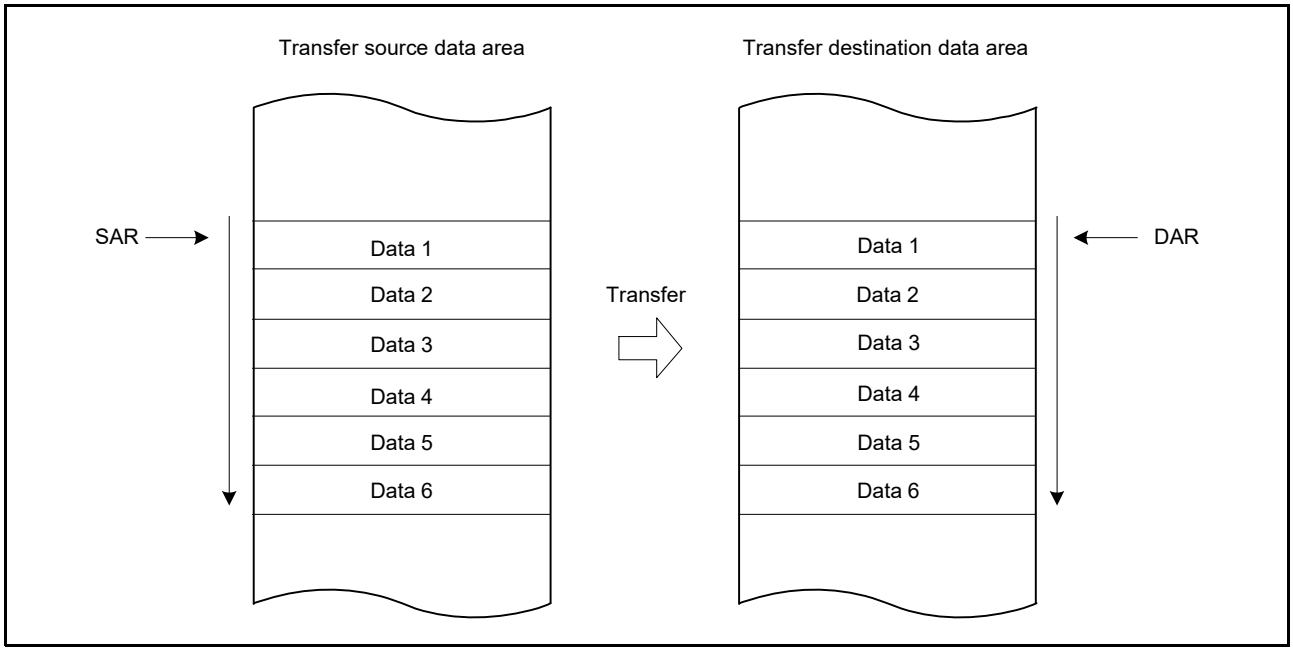

Figure 18.5 Memory Map of Normal Transfer Mode

18.4.4 Repeat Transfer Mode

This mode allows 1-byte, 1-word, or 1-longword data transfer on a single transfer request.
Specify either transfer source or transfer destination for the repeat area by the MRB.DTS bit. The transfer count can be set to 1 to 256. When the specified-count transfer is completed, the initial value of the address register specified in the transfer counter and the repeat area is restored and transfer is repeated. The other address register is incremented or decremented continuously or remains unchanged.
When the transfer counter CRAL is decreased to 00h in repeat transfer mode, the CRAL value is updated to the value set in the CRAH register. Thus the transfer counter does not become 00h, which disables an interrupt request to be generated to the CPU when the MRB.DISEL bit is set to 0 (an interrupt request to the CPU is generated on completion of the specified number of data transfers).
Table 18.6 lists the register functions in repeat transfer mode, and Figure 18.6 shows the memory map of repeat transfer mode.

Table 18.6 Register Functions in Repeat Transfer Mode

		Value Written Back by Writing Transfer Information		
			When CRAL = 1	
Register	**Description**	**When CRAL ≠ 1**	**When the MRB.DTS Bit is 0**	**When the MRB.DTS Bit is 1**
SAR	Transfer source address	Increment/decrement/fixed*1	Increment/decrement/fixed*1	SAR register initial value
DAR	Transfer destination address	Increment/decrement/fixed*1	DAR register initial value	Increment/decrement/fixed*1
CRAH	Retains initial value of transfer counter	CRAH	CRAH	
CRAL	Transfer counter A	CRAL – 1	CRAH	
CRB	Transfer counter B	Not updated	Not updated	

Note 1. Write-back operation is skipped when address is fixed.

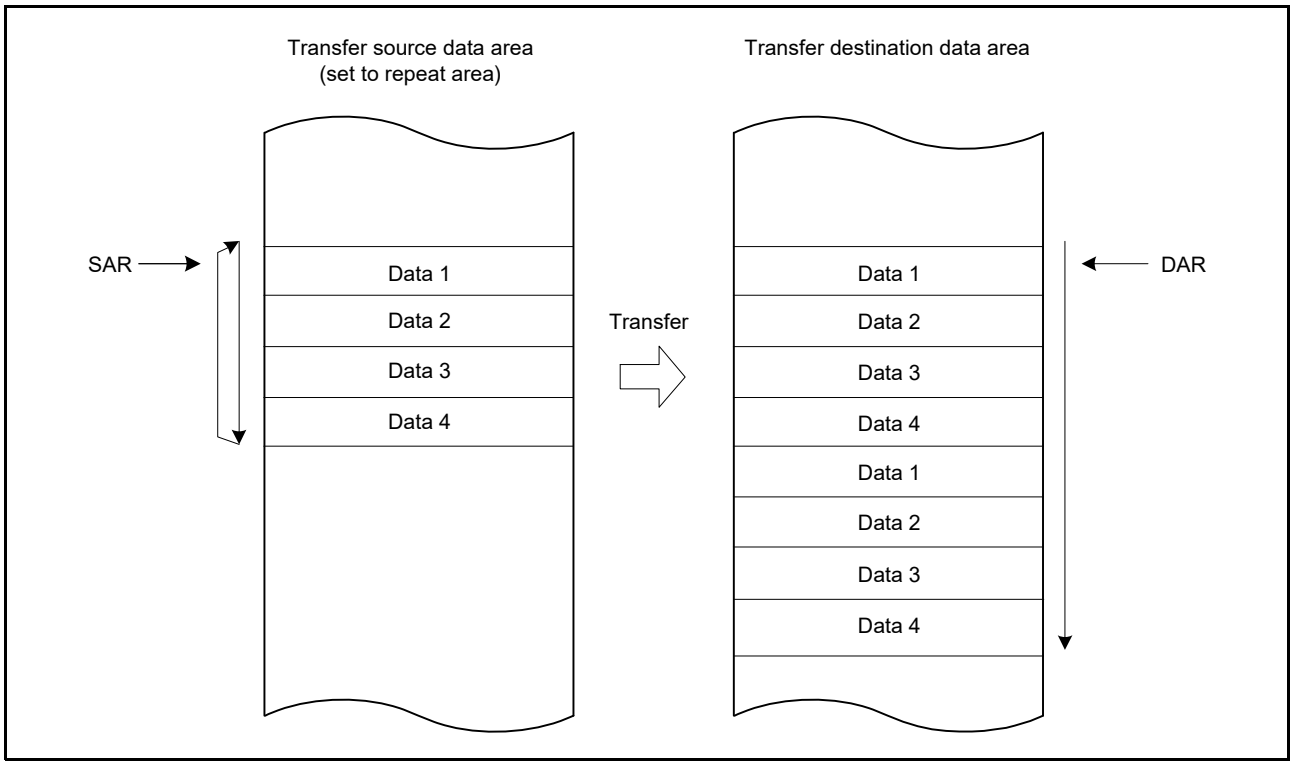

Figure 18.6 Memory Map of Repeat Transfer Mode (Transfer Source: Repeat Area)

18.4.5 Block Transfer Mode

This mode allows single-block data transfer on a single transfer request.
Specify either transfer source or transfer destination for the block area by the MRB.DTS bit. The block size can be set to 1 to 256 bytes, 1 to 256 words, or 1 to 256 longwords.
When transfer of the specified one block is completed, the initial values of the block size counter CRAL and the address register (the SAR register when the MRB.DTS bit is 1 or the DAR register when the DTS bit is 0) specified in the block area are restored. The other address register is incremented or decremented continuously or remains unchanged.
The transfer count (block count) can be set to 1 to 65536. This mode enables an interrupt request to the CPU to be generated at the end of specified-count block transfer.
Table 18.7 lists register functions in block transfer mode, and Figure 18.7 shows the memory map of block transfer mode.

Table 18.7 Register Functions in Block Transfer Mode

		Value Written Back by Writing Transfer Information	
Register	**Description**	**When MRB.DTS Bit is 0**	**When MRB.DTS Bit is 1**
SAR	Transfer source address	Increment/decrement/fixed*1	SAR register initial value
DAR	Transfer destination address	DAR register initial value	Increment/decrement/fixed*1
CRAH	Retains initial value of block size	CRAH	
CRAL	Block size counter	CRAH	
CRB	Block transfer counter	CRB – 1	

Note 1. Write-back operation is skipped when address is fixed.

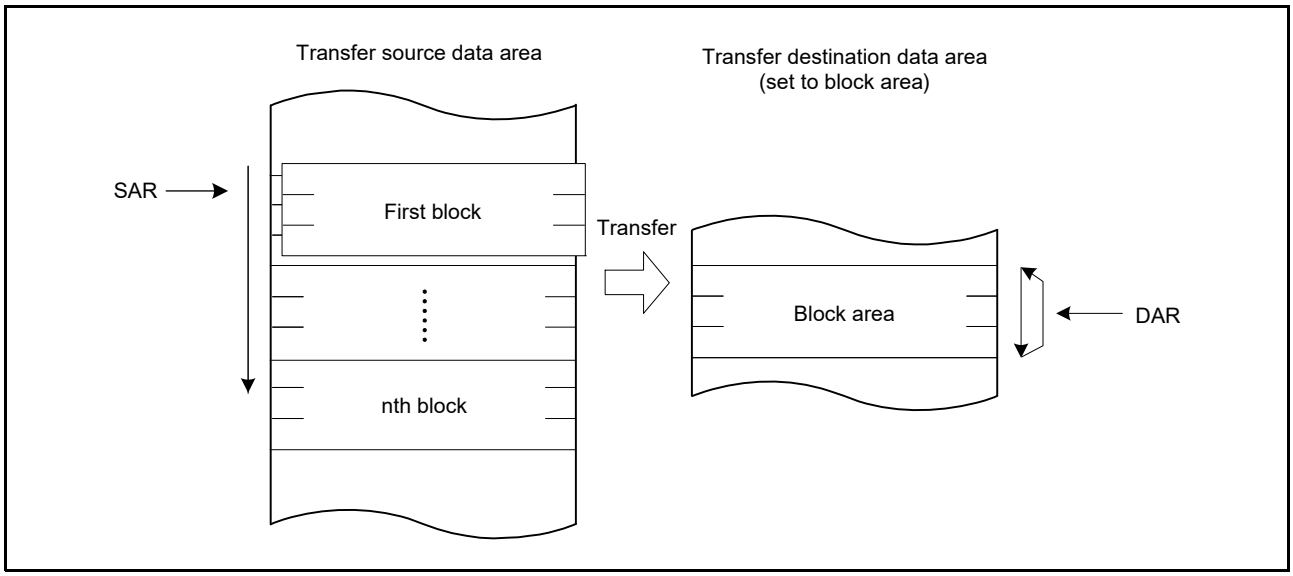

Figure 18.7 Memory Map of Block Transfer Mode (Transfer Destination: Block Area)

18.4.6 Chain Transfer

Setting the MRB.CHNE bit to 1 allows chain transfer to be performed continuously on a single transfer request.
If the MRB.CHNE bit is 1 and the MRB.CHNS bit is 0, an interrupt request to the CPU is not generated when the specified number of data transfers is completed, or while the MRB.DISEL bit is 1 (an interrupt request to the CPU is generated for every data transfer). Data transfer has no effect on the interrupt status flag, which is the request source.
The transfer information (SAR, DAR, CRA, CRB, MRA, and MRB) that define a data transfer can be specified independently of each other. Figure 18.8 shows chain transfer operation.

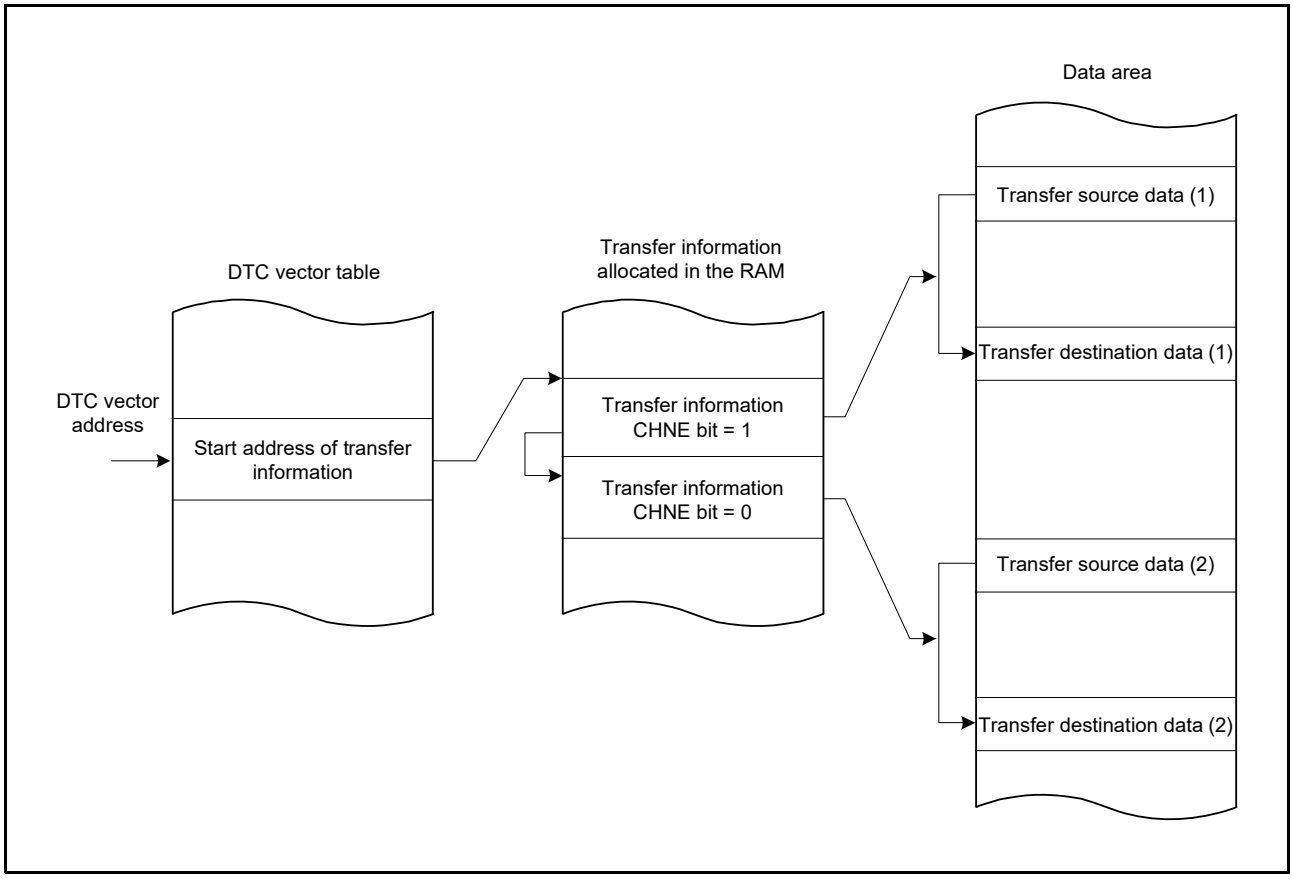

Figure 18.8 Chain Transfer Operation

If the MRB.CHNE bit is 1 and the CHNS bit is 1, chain transfer is performed only after completion of specified number of data transfers. In repeat transfer mode, chain transfer is performed after completion of specified number of data transfers.
For details on chain transfer conditions, refer to Table 18.3, Chain Transfer Conditions.

18.4.7 Operation Timing

Figure 18.9 to Figure 18.13 show examples of DTC operation timing.

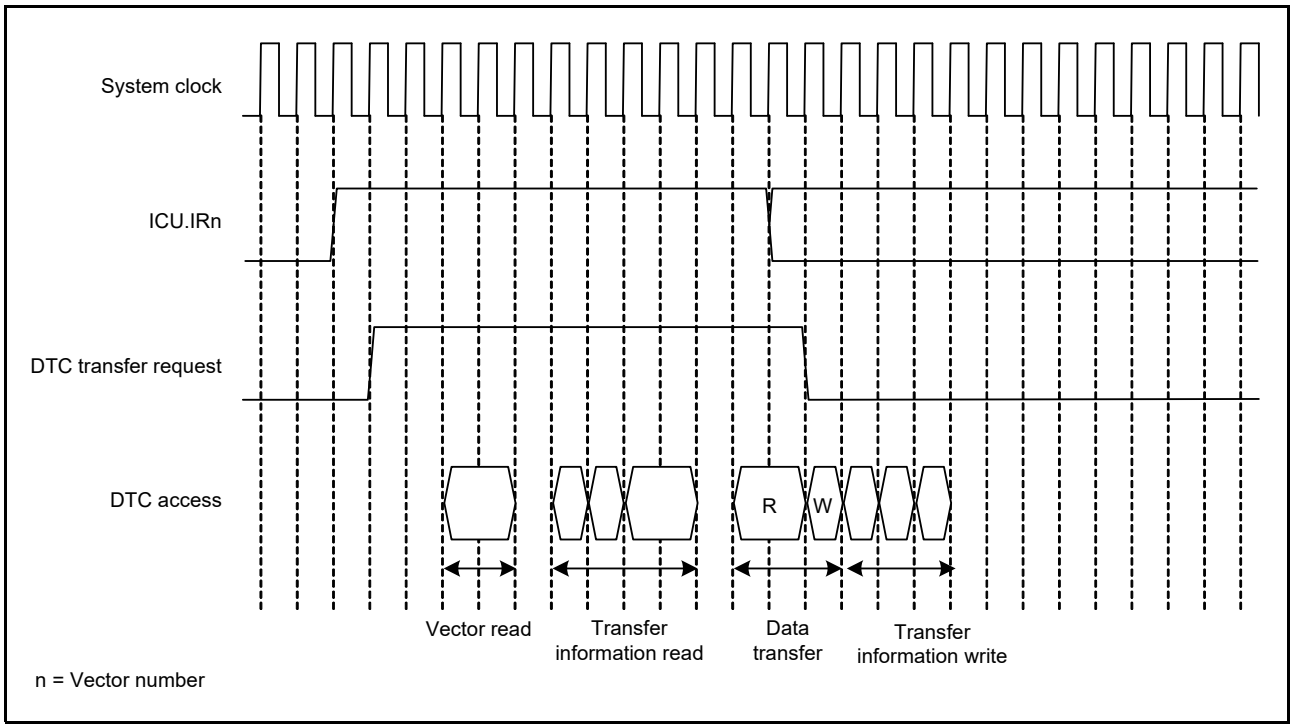

Figure 18.9 Example (1) of DTC Operation Timing (Short-Address Mode, Normal Transfer Mode, Repeat Transfer Mode)

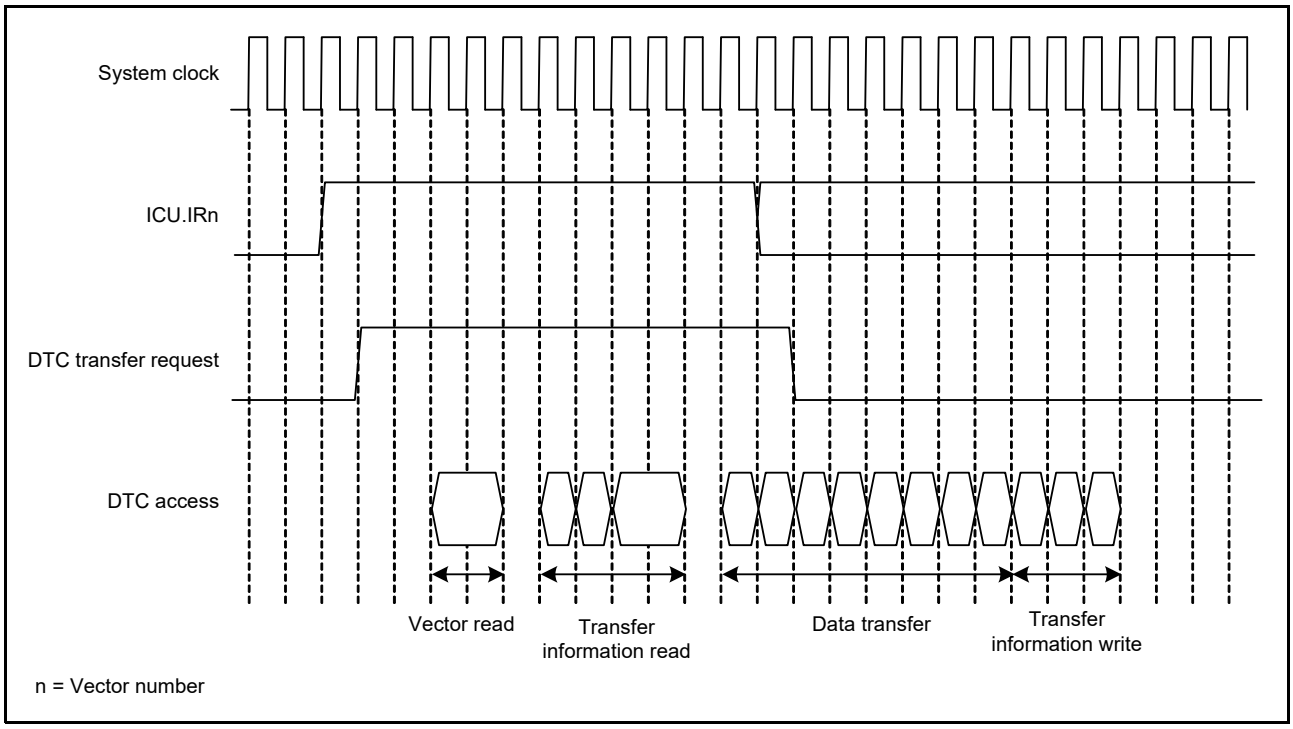

Figure 18.10 Example (2) of DTC Operation Timing (Short-Address Mode, Block Transfer Mode, Block Size = 4)

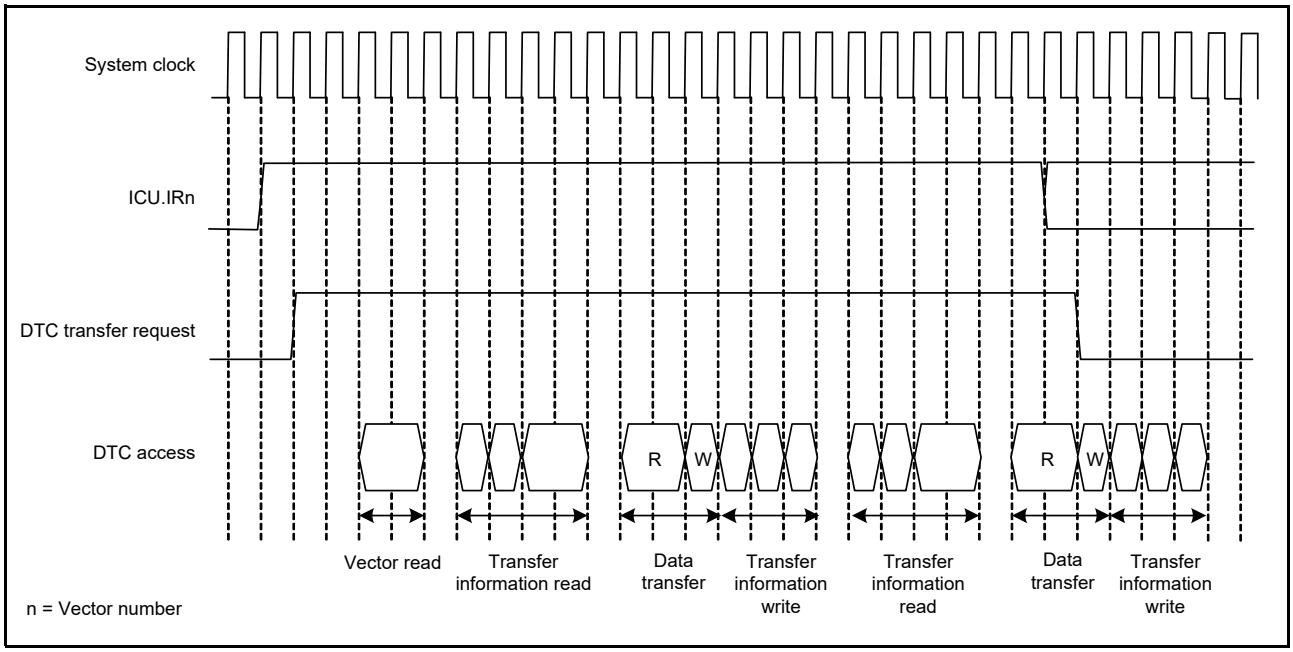

Figure 18.11 Example (3) of DTC Operation Timing (Short-Address Mode, Chain Transfer)

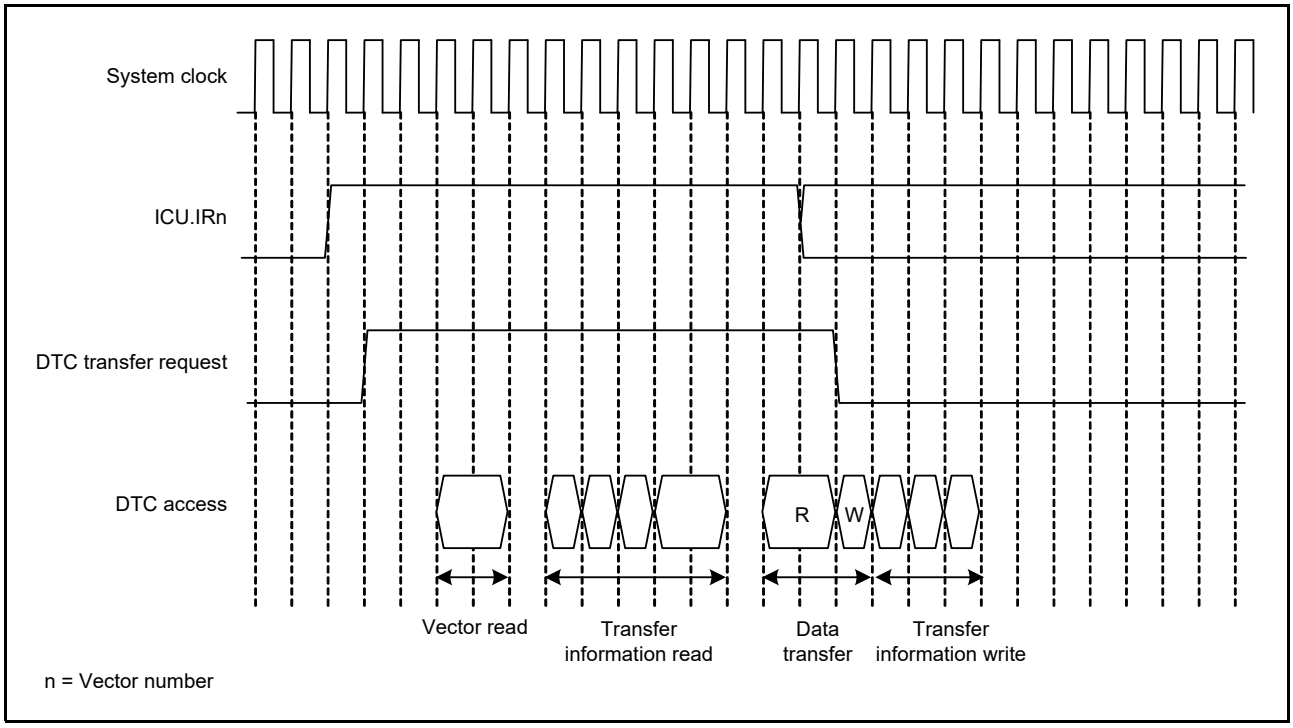

Figure 18.12 Example (4) of DTC Operation Timing (Full-Address Mode, Normal Transfer Mode, Repeat Transfer Mode)

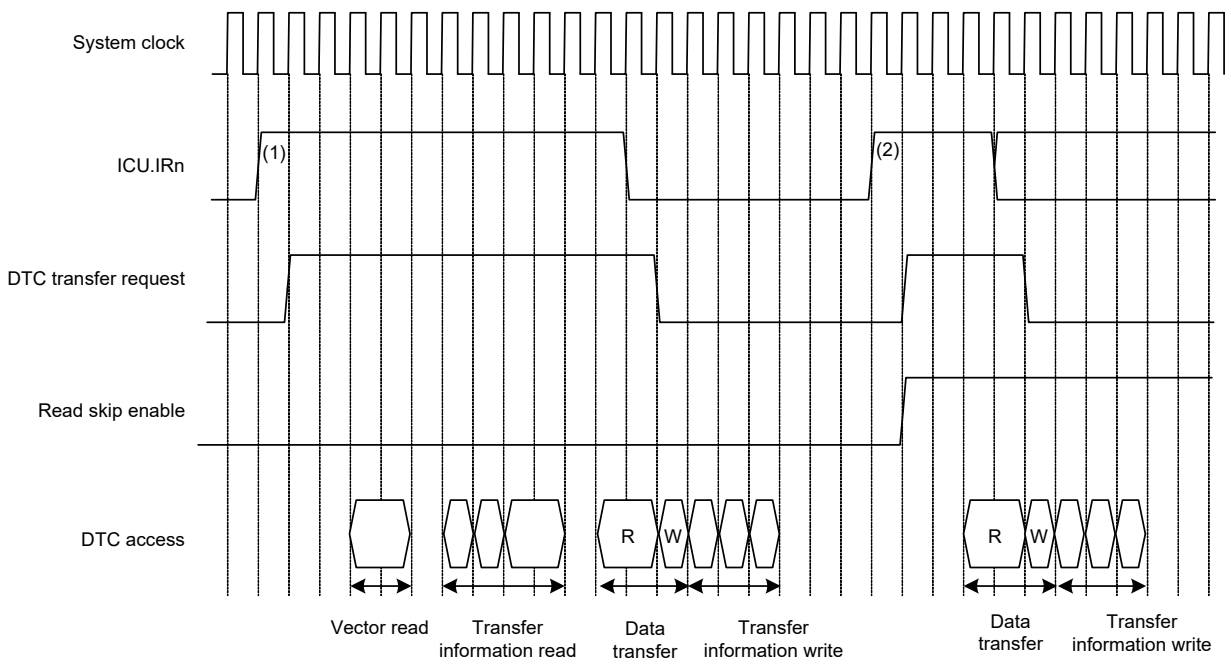

n = Vector number

Note: When request sources (vector numbers) of (1) and (2) are the same and the DTCCR.RRS bit is 1, the transfer information read for request (2) is skipped.

Figure 18.13 Example of Operation When Transfer Information Read Skip is Executed (Vector, Transfer Information, and Transfer Destination Data on the RAM, and Transfer Source Data on the Peripheral Module)

18.4.8 Execution Cycles of the DTC

Table 18.8 lists the execution cycles of single data transfer of the DTC.
For the order of the execution states, refer to section 18.4.7, Operation Timing.

Table 18.8 Execution Cycles of the DTC

Transfer Mode	Vector Read		Transfer Information Read			Transfer Information Write			Data Transfer		Internal Operation	
									Read	Write		
Normal	Cv + 1	0*1	4 × Ci + 1*2	3 × Ci + 1*3	0*1	3 × Ci*4	2 × Ci*5	Ci*6	Cr + 1	Cw	2	0*1
Repeat									Cr + 1	Cw		
Block*7									P × Cr	P × Cw		

Note 1. When transfer information read is skipped
Note 2. In full-address mode
Note 3. In short-address mode
Note 4. When neither SAR nor DAR is set to address-fixed
Note 5. When SAR or DAR is set to address-fixed
Note 6. When SAR and DAR are set to address-fixed
Note 7. When the block size is 2 or more. If the block size is 1, the cycle number for normal transfer is applied.

P: Block size (initial settings of CRAH and CRAL)
Cv: Cycles for access to vector transfer information storage destination
Ci: Cycles for access to transfer information storage destination address
Cr: Cycles for access to data read destination
Cw: Cycles for access to data write destination
(The unit is system clocks (ICLK) for “+ 1” in the Vector Read, Transfer Information Read, and Data Transfer Read columns and “2” in the Internal Operation column.)
(Cv, Ci, Cr, and Cw vary depending on the corresponding access destination. For the number of cycles for respective access destinations, refer to section 37, RAM, section 38, Flash Memory (FLASH), and section 5, I/O Registers.)

18.4.9 DTC Bus Mastership Release Timing

The DTC does not release the bus mastership during transfer information read and transfer information write. While transfer information is not read or written, bus arbitration is made according to the priority determined by the bus master arbitrator.
For bus arbitration, refer to section 15, Buses.

18.5 DTC Setting Procedure

Before using the DTC, set the DTC vector base register (DTCVBR).
Figure 18.14 shows the procedure to set the DTC.

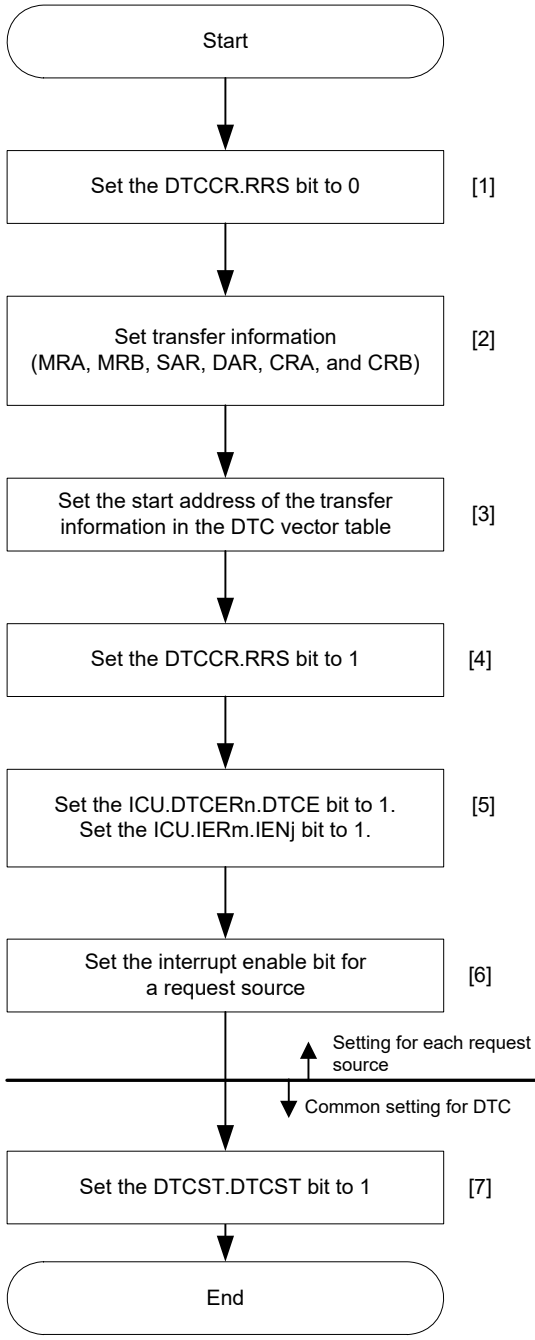

Set the ICU.IERm.IENj bit corresponding to the request source interrupt to 0 and provide the following settings.

[1] Setting the DTCCR.RRS bit to 0 resets the transfer information read skip flag. After that, transfer information read is not skipped during the data transfer. When transfer information is updated, be sure to make this setting.

[2] Allocate transfer information (MRA, MRB, SAR, DAR, CRA, and CRB) in the data area. For setting transfer information, refer to section 18.2, Register Descriptions. For how to allocate transfer information, refer to section 18.3.1, Allocating Transfer Information and DTC Vector Table.

[3] Set the start address of the transfer information in the DTC vector table. For how to set the DTC vector table, refer to section 18.3.1, Allocating Transfer Information and DTC Vector Table.

[4] Setting the DTCCR.RRS bit to 1 enables skipping of the second and the subsequent transfer information read cycles for continuous data transfer due to the same interrupt source. The RRS bit can be set to 1 at any time, but this setting during data transfer becomes valid from the next transfer.

[5] Set the ICU.DTCERn.DTCE bit (n = interrupt vector number) that corresponds to the DTC request source to 1. Set the ICU.IERm.IENj bit to 1. For the correspondence between interrupt sources and DTCERn register, refer to section 14.3.1, Interrupt Vector Table in section 14, Interrupt Controller (ICUb).

[6] Set the interrupt enable bit of the peripheral module, which is request source, to 1. When a source interrupt is generated, the DTC starts operation. For the setting of the interrupt enable bit, refer to the setting of the peripheral module that is to be a request source.

[7] Set the DTCST.DTCST bit to 1 (DTC module start)*1.

Note 1. The DTCST.DTCST bit can be set even if the setting for each request source is not completed.

Figure 18.14 Procedure to Set the DTC

18.6 Examples of DTC Usage

18.6.1 Normal Transfer

As an example of DTC usage, its employment in the reception of 128 bytes of data by an SCI is described below.

(1) Transfer Information Setting

Set the MRA.MD[1:0] bits to 00b (normal transfer mode), the MRA.SZ[1:0] bits to 00b (byte transfer), and the MRA.SM[1:0] bits to 00b (source address is fixed). Set the MRB.CHNE bit to 0 (chain transfer is disabled), the MRB.DISEL bit to 0 (an interrupt request to the CPU is generated on completion of the specified number of data transfers), and the MRB.DM[1:0] bits to 10b (DAR is incremented after data transfer). The MRB.DTS bit can be set to any value. Set the RDR register address of the SCI in the SAR register, the start address of the RAM area for data storage in the DAR register, and 128 (0080h) in the CRA register. The CRB register can be set to any value.

(2) DTC Vector Table Setting

The start address of the transfer information for the RXI interrupt is set in the vector table for the DTC.

(3) ICU Setting and DTC Module Activation

Set the corresponding ICU.DTCERn.DTCE bit to 1 and the ICU.IERm.IENj bit to 1.
Set the DTCST.DTCST bit to 1.

(4) SCI Setting

Enable the RXI interrupt by setting the SCR.RIE bit in the SCI to 1. If a reception error occurs during the SCI receive operation, further reception is not performed. Accordingly, make settings so that the CPU can accept receive error interrupts.

(5) DTC Transfer

Every time the reception of 1 byte by the SCI is completed, an RXI interrupt is generated to start the data transfer. The DTC transfers the received byte from the RDR of the SCI to RAM, after which the DAR register is incremented and the CRA register is decremented.

(6) Interrupt Handling

After 128 times of data transfers have been completed and the value in the CRA register becomes 0, an RXI interrupt request is output to the CPU. Complete the process in the handling routine for this interrupt.

18.6.2 Chain Transfer When the Counter is 0

The second data transfer is performed only when the transfer counter is set to 0 in the first data transfer, and the first data transfer information is repeatedly changed in the second data transfer. Repeating this chain transfer enables transfers to be repeated more than 256 times.
The following shows an example of configuring a 128-Kbyte input buffer to addresses 20 0000h to 21 FFFFh (where the input buffer is set so that its lower address starts with 0000h). Figure 18.15 shows a chain transfer when the counter is 0.

(1) Set normal transfer mode for input data for the first data transfer. Set the following:
Transfer source address: Fixed, the CRA register is 0000h (65,536 times), the MRB.CHNE bit is 1 (chain transfer is enabled), the MRB.CHNS bit is 1 (chain transfer is performed only when the transfer counter becomes 0), and the MRB.DISEL bit is 0 (an interrupt request to the CPU is generated on completion of the specified number of data transfers).
(2) Prepare the upper 8 bits (in this case, 21h and 20h) of the start address at every 65,536 times of the transfer destination address for the first data transfer in another area (such as ROM).
(3) For the second data transfer, set repeat transfer mode (source is repeat area) for rewriting the transfer destination address of the first data transfer. The transfer destination is the address where the upper 8 bits of the DAR register in the first transfer information is allocated. In this case, set the MRB.CHNE bit to 0 (chain transfer is disabled) and the MRB.DISEL bit to 0 (an interrupt request to the CPU is generated on completion of the specified number of data transfers). In this case, set the transfer counter to 2.
(4) When a transfer request is accepted, the first data transfer is executed. When transfer is executed 65,536 times and the transfer counter of the first data transfer becomes 0, the second data transfer is started and the upper 8 bits of the transfer destination address of the first data transfer is set to 21h. At this time, the lower 16 bits of the transfer destination address and the transfer counter of the first data transfer have become 0000h.
(5) In succession, when another transfer request is accepted, the first data transfer is executed. When transfer is executed 65,536 times and the transfer counter of the first data transfer becomes 0, the second data transfer is started and the upper 8 bits of the transfer destination address of the first data transfer is set to 20h. At this time, the lower 16 bits of the transfer destination address and the transfer counter of the first data transfer have become 0000h.
(6) Steps (4) and (5) above are repeated infinitely. Because the second data transfer is in repeat transfer mode, no interrupt request to the CPU is generated.

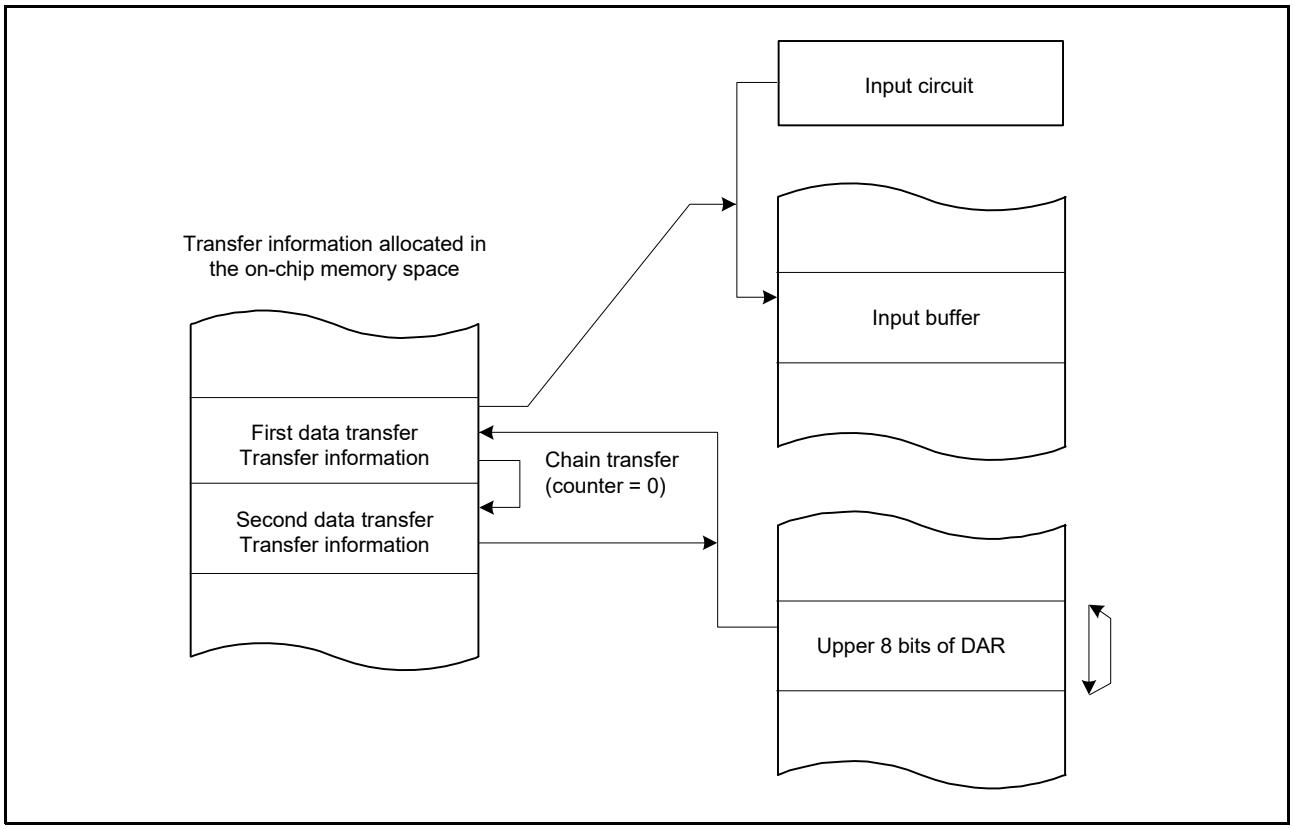

Figure 18.15 Chain Transfer When the Counter is 0

18.7 Interrupt Source

When the DTC has finished data transfer of specified count or when data transfer with the MRB.DISEL bit set to 1 (an interrupt request to the CPU is generated each time the data transfer is performed) has been completed, an interrupt to the CPU is generated by the DTC trigger source. Such interrupts to the CPU are controlled according to the PSW.I bit (interrupt enable) of the CPU, the PSW.IPL[3:0] bits (processor interrupt priority level), and the priority level of the interrupt controller.

18.8 Event Link

The DTC outputs an event signal on completing data transfer in response to one request.

18.9 Low Power Consumption Function

Before making a transition to the module stop state, deep sleep mode, or software standby mode, set the DTCST.DTCST bit to 0 (DTC module stop), and then perform the following.

(1) Module Stop Function

Writing 1 (transition to the module-stop state is made) to the MSTPCRA.MSTPA28 bit enables the module stop function of the DTC. If data transfer is in progress at the time 1 is written to the MSTPCRA.MSTPA28 bit, the transition to the module stop state proceeds after data transfer has ended. While the MSTPCRA.MSTPA28 bit is 1, accessing the DTC registers is prohibited.
Writing 0 (release from the module-stop state) to the MSTPCRA.MSTPA28 bit releases the DTC from the module stop state.

(2) Deep Sleep Mode

Make settings according to the procedure under section 11.6.2.1, Entry to Deep Sleep Mode, in section 11, Low Power Consumption.
If any data transfer is in progress at the time the WAIT instruction is executed, the transition to deep sleep mode follows the completion of the data transfer.
The DTC is released from the module stop state by writing 0 to the MSTPCRA.MSTPA28 bit following recovery from deep sleep mode.

(3) Software Standby Mode

Make settings according to the procedure under section 11.6.3.1, Entry to Software Standby Mode, in section 11, Low Power Consumption.
If any data transfer is in progress at the time the WAIT instruction is executed, the transition to software standby mode follows the completion of the data transfer.

(4) Notes on Low Power Consumption Function

For the WAIT instruction and the register setting procedure, refer to section 11.7.5, Timing of WAIT Instructions in section 11, Low Power Consumption.
To perform data transfer after returning from a low power consumption mode, set the DTCST.DTCST bit to 1 again.
To use a request that is generated in deep sleep mode or software standby mode as an interrupt request to the CPU but not as a DTC transfer request, specify the CPU as the interrupt request destination according to the description in section 14.4.3, Selecting Interrupt Request Destinations in section 14, Interrupt Controller (ICUb), and then execute the WAIT instruction.

18.10 Usage Notes

18.10.1 Start Address of Transfer Information

Set multiples of 4 for the start addresses of the transfer information to be specified in the DTC vector table. If any value other than a multiple of 4 is specified, access still proceeds with the lower 2 bits of the address regarded as 00b.

18.10.2 Allocating Transfer Information

Allocate transfer information in the memory area according to the endian of the area as shown in Figure 18.16.
For example, when writing CRA and CRB settings in 16-bit units in big endian, write the CRA setting to the address plus 8h (Ch) and the CRB setting to the address plus Ah (Eh). In little endian, write the CRB setting to the address plus 8h (Ch) and the CRA setting to the address plus Ah (Eh). When writing CRA and CRB settings in 32-bit units, allocate the CRA setting at the MSB side of the 32 bits and the CRB setting at the LSB side, and write the settings to the address plus 8h (Ch), regardless of endian.

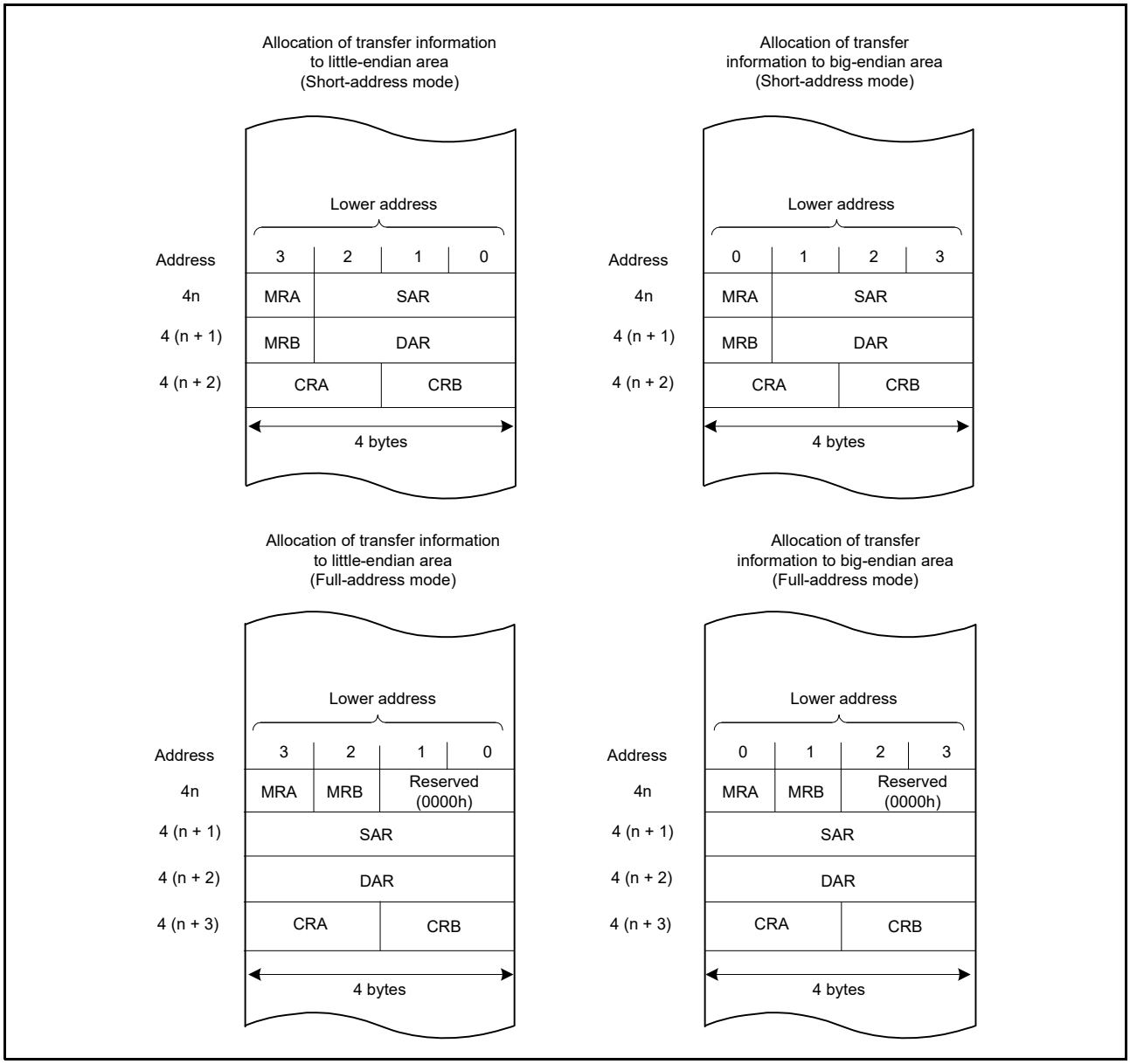

Figure 18.16 Allocation of Transfer Information

18.10.3 Setting the DTC Transfer Request Enable Register in the Interrupt Controller (ICU.DTCERn)

The DMA request should not be issued by setting the DMAC trigger select register (ICU.DMRSRm (m = DMAC channel number)) to the same vector number that has been specified by setting the ICU.DTCERn.DTCE bit to 1 (the corresponding interrupt source is selected as the DTC trigger). For details on the ICU.DTCERn and ICU.DMRSRm registers (m = DMAC channel number), refer to section 14, Interrupt Controller (ICUb).

19. Event Link Controller (ELC)

19.1 Overview

The event link controller (ELC) uses the interrupt requests generated by various peripheral modules as event signals, and interconnects (links) peripheral modules. As a result, peripheral modules can directly perform interlinked operation among them without using software.
Event signals can be output regardless of the settings of the corresponding interrupt request enable bits.

Table 19.1 lists the specifications of the ELC, and Figure 19.1 shows a block diagram of the ELC.

Table 19.1 ELC Specifications

Item	Description
Event link function	• 56 types of event signals can be directly interconnected to modules. • Operation for timer modules when inputting an event signal can be selected. • Event linkage operation is possible for port B. Single port*1: Event linkage operation can be set in a single specified port.
Low power consumption function	Module stop state can be set.

Note 1. When an input signal to a corresponding pin changes, an event is generated in a single port specified as the input.

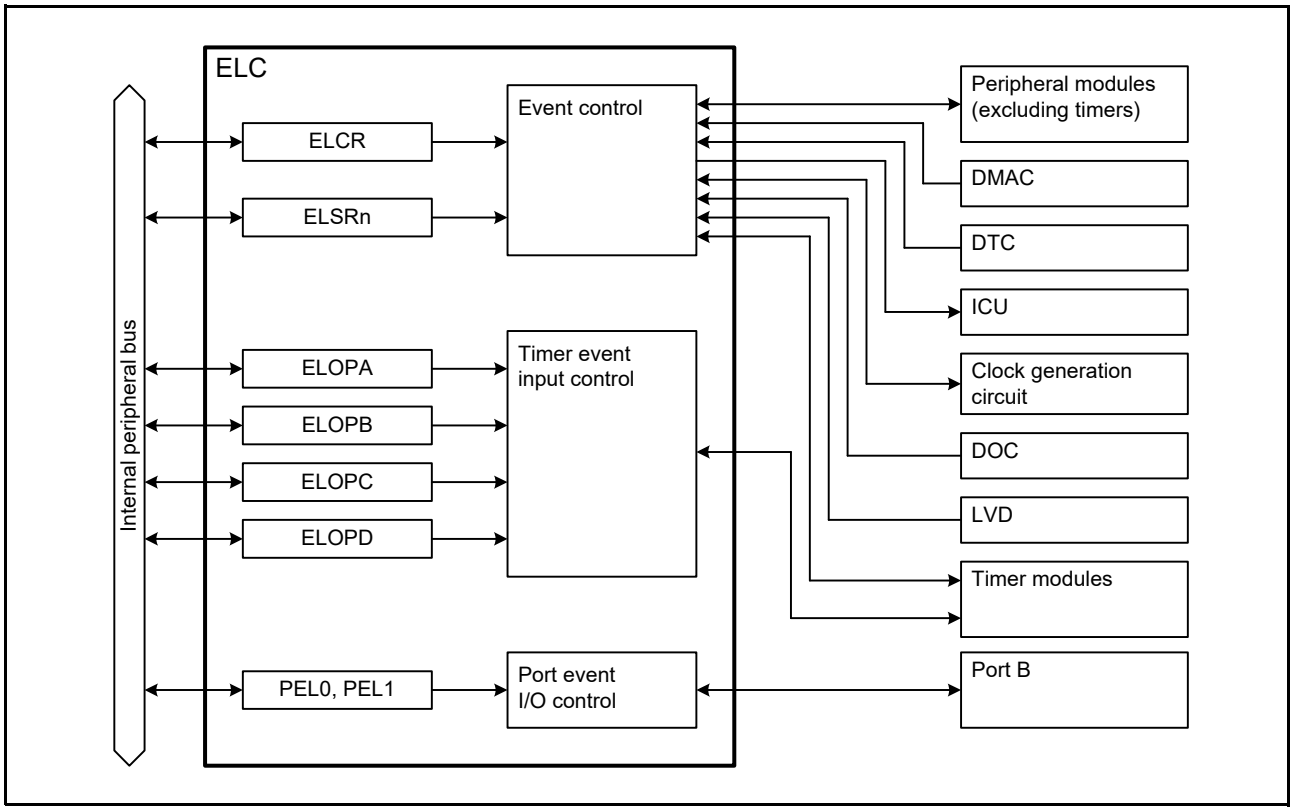

Figure 19.1 ELC Block Diagram (n = 1 to 4, 7, 8, 10, 12, 15, 18, 19, 24, 25, 28, 29, 46, 47)

19.2 Register Descriptions

19.2.1 Event Link Control Register (ELCR)

Address(es): ELC.ELCR 0008 B100h

	b7	b6	b5	b4	b3	b2	b1	b0
	ELCON	—	—	—	—	—	—	—
Value after reset:	0	1	1	1	1	1	1	1

Bit	Symbol	Bit Name	Description	R/W
b6 to b0	—	Reserved	These bits are read as 1. The write value should be 1.	R/W
b7	ELCON	All Event Link Enable	0: ELC function is disabled. 1: ELC function is enabled.	R/W

The ELCR register controls operation of the ELC.

19.2.2 Event Link Setting Register n (ELSRn) (n = 1 to 4, 7, 8, 10, 12, 15, 18, 19, 24, 25, 28, 29, 46, 47)

Address(es): ELC.ELSR1 0008 B102h, ELC.ELSR2 0008 B103h, ELC.ELSR3 0008 B104h, ELC.ELSR4 0008 B105h, ELC.ELSR7 0008 B108h, ELC.ELSR8 0008 B109h, ELC.ELSR10 0008 B10Bh, ELC.ELSR12 0008 B10Dh, ELC.ELSR15 0008 B110h, ELC.ELSR18 0008 B113h, ELC.ELSR19 0008 B114h, ELC.ELSR24 0008 B119h, ELC.ELSR25 0008 B11Ah, ELC.ELSR28 0008 B11Dh, ELC.ELSR29 0008 B11Eh, ELC.ELSR46 0008 B144h, ELC.ELSR47 0008 B145h

	b7	b6	b5	b4	b3	b2	b1	b0
	ELS[7:0]							
Value after reset:	0	0	0	0	0	0	0	0

Bit	Symbol	Bit Name	Description	R/W
b7 to b0	ELS[7:0]	Event Link Select	00h: Event signal output to the corresponding peripheral module is disabled. 08h to 6Ah: Set the number for the event signal to be linked. Settings other than above are prohibited.	R/W

The ELSRn register specifies an event signal to be linked to for each peripheral module. Table 19.2 shows the correspondence between the ELSRn register and the peripheral modules. Table 19.3 shows the correspondence between values set in the ELSRn register and event signals.

Table 19.2 Correspondence between the ELSRn Register and the Peripheral Modules

Register Name	Peripheral Module
ELSR1	MTU1
ELSR2	MTU2
ELSR3	MTU3
ELSR4	MTU4
ELSR7	CMT1
ELSR8	ICU (LPT dedicated interrupt)*1
ELSR10	TMR0
ELSR12	TMR2
ELSR15	S12AD (ELCTRG00N)
ELSR18	ICU (Interrupt 1)*2
ELSR19	ICU (Interrupt 2)*2
ELSR24	Single port 0
ELSR25	Single port 1
ELSR28	Clock source switching to LOCO
ELSR29	POE
ELSR46	DSAD0
ELSR47	DSAD1

Note 1. Specify an event number to 32h (LPT compare match 0).
Note 2. Specify an event number from among 65h to 6Ah. Do not set other values.

Table 19.3 Correspondence between Values Set in ELSRn.ELS[7:0] Bits and Event Signals (1/2)

ELS[7:0] Bit Value	Peripheral Modules	Event Signal Set in ELSRn
08h	Multifunction timer pulse unit 2	MTU1 compare match 1A
09h		MTU1 compare match 1B
0Ah		MTU1 overflow
0Bh		MTU1 underflow
0Ch		MTU2 compare match 2A
0Dh		MTU2 compare match 2B
0Eh		MTU2 overflow
0Fh		MTU2 underflow
10h		MTU3 compare match 3A
11h		MTU3 compare match 3B
12h		MTU3 compare match 3C
13h		MTU3 compare match 3D
14h		MTU3 overflow
15h		MTU4 compare match 4A
16h		MTU4 compare match 4B
17h		MTU4 compare match 4C
18h		MTU4 compare match 4D
19h		MTU4 overflow
1Ah		MTU4 underflow
1Fh	Compare match timer	CMT1 compare match 1
22h	8-bit timers	TMR0 compare match A0
23h		TMR0 compare match B0
24h		TMR0 overflow
28h		TMR2 compare match A2
29h		TMR2 compare match B2
2Ah		TMR2 overflow
31h	Independent watchdog timer	IWDT underflow or refresh error
32h	Low power timer	LPT compare match 0
34h	12-bit A/D converter	S12AD comparison conditions are met
35h		S12AD comparison conditions are not met
3Ah	Serial communications interfaces	SCI5 error (receive error or error signal detection)
3Bh		SCI5 receive data full
3Ch		SCI5 transmit data empty
3Dh		SCI5 transmit end
4Eh	I^2C-bus interface	RIIC0 communication error or event generation
4Fh		RIIC0 receive data full
50h		RIIC0 transmit data empty
51h		RIIC0 transmit end
52h	Serial peripheral interface	RSPI0 error (mode fault, overrun, underrun, or parity error)
53h		RSPI0 idle
54h		RSPI0 receive buffer full
55h		RSPI0 transmit buffer empty
56h		RSPI0 transmit end
58h	12-bit A/D converter	S12AD A/D conversion end

Table 19.3 Correspondence between Values Set in ELSRn.ELS[7:0] Bits and Event Signals (2/2)

ELS[7:0] Bit Value	Peripheral Modules	Event Signal Set in ELSRn
5Bh	Voltage detection circuit	LVD1 voltage detection
5Ch		LVD2 voltage detection
5Dh	DMA controller	DMAC0 transfer end
5Eh		DMAC1 transfer end
5Fh		DMAC2 transfer end
60h		DMAC3 transfer end
61h	Data transfer controller	DTC transfer end
62h	Clock generation circuit	Oscillation stop detection of clock generation circuit
65h	I/O ports	Input edge detection of single input port 0
66h		Input edge detection of single input port 1
69h	Event link controller	Software event
6Ah	Data operation circuit	DOC data operation condition met
Settings other than above are prohibited.		

19.2.3 Event Link Option Setting Register A (ELOPA)

Address(es): ELC.ELOPA 0008 B11Fh

	b7	b6	b5	b4	b3	b2	b1	b0
	MTU3MD[1:0]		MTU2MD[1:0]		MTU1MD[1:0]		—	—
Value after reset:	1	1	1	1	1	1	1	1

Bit	Symbol	Bit Name	Description	R/W
b1, b0	—	Reserved	These bits are read as 1. The write value should be 1.	R/W
b3, b2	MTU1MD[1:0]	MTU1 Operation Select	b3 b2 0 0: Counting is started. 0 1: Counting is restarted. 1 0: Input capture*1 1 1: Event output is disabled.	R/W
b5, b4	MTU2MD[1:0]	MTU2 Operation Select	b5 b4 0 0: Counting is started. 0 1: Counting is restarted. 1 0: Input capture*2 1 1: Event output is disabled.	R/W
b7, b6	MTU3MD[1:0]	MTU3 Operation Select	b7 b6 0 0: Counting is started. 0 1: Counting is restarted. 1 0: Input capture*3 1 1: Event output is disabled.	R/W

Note 1. The MTU1.TCNT value is captured into the MTU1.TGRA register.
Note 2. The MTU2.TCNT value is captured into the MTU2.TGRA register.
Note 3. The MTU3.TCNT value is captured into the MTU3.TGRA register.

The ELOPA register specifies the operations of MTU1 to MTU3 when an event signal is input. Set 11b (event output is disabled) when the ELC function is not used.

19.2.4 Event Link Option Setting Register B (ELOPB)

Address(es): ELC.ELOPB 0008 B120h

	b7	b6	b5	b4	b3	b2	b1	b0
	—	—	—	—	—	—	MTU4MD[1:0]	
Value after reset:	1	1	1	1	1	1	1	1

Bit	Symbol	Bit Name	Description	R/W
b1, b0	MTU4MD[1:0]	MTU4 Operation Select	b1 b0 0 0: Counting is started. 0 1: Counting is restarted. 1 0: Input capture*1 1 1: Event output is disabled.	R/W
b7 to b2	—	Reserved	These bits are read as 1. The write value should be 1.	R/W

Note 1. The MTU4.TCNT value is captured into the MTU4.TGRA register.

The ELOPB register specifies the operation of MTU4 when an event signal is input. Set 11b (event output is disabled) when the ELC function is not used.

19.2.5 Event Link Option Setting Register C (ELOPC)

Address(es): ELC.ELOPC 0008 B121h

	b7	b6	b5	b4	b3	b2	b1	b0
	—	—	LPTMD[1:0]		CMT1MD[1:0]		—	—
Value after reset:	1	1	1	1	1	1	1	1

Bit	Symbol	Bit Name	Description	R/W
b1, b0	—	Reserved	These bits are read as 1. The write value should be 1.	R/W
b3, b2	CMT1MD[1:0]	CMT1 Operation Select	b3 b2 0 0: Counting is started. 0 1: Counting is restarted. 1 0: Event counter 1 1: Event output is disabled.	R/W
b5, b4	LPTMD[1:0]	LPT Operation Select	b5 b4 0 0: Output the LPT compare match 0 event to ICU as an interrupt request 1 1: Event output is disabled. Settings other than above are prohibited.	R/W
b7, b6	—	Reserved	These bits are read as 1. The write value should be 1.	R/W

The ELOPC register specifies the operations of CMT1 and LPT when an event signal is input. Set 11b (event output is disabled) when the ELC function is not used.

19.2.6 Event Link Option Setting Register D (ELOPD)

Address(es): ELC.ELOPD 0008 B122h

	b7	b6	b5	b4	b3	b2	b1	b0
	—	—	TMR2MD[1:0]		—	—	TMR0MD[1:0]	
Value after reset:	1	1	1	1	1	1	1	1

Bit	Symbol	Bit Name	Description	R/W
b1, b0	TMR0MD[1:0]	TMR0 Operation Select	b1 b0 0 0: Counting is started. 0 1: Counting is restarted. 1 0: Event counter 1 1: Event output is disabled.	R/W
b3, b2	—	Reserved	These bits are read as 1. The write value should be 1.	R/W
b5, b4	TMR2MD[1:0]	TMR2 Operation Select	b5 b4 0 0: Counting is started. 0 1: Counting is restarted. 1 0: Event counter 1 1: Event output is disabled.	R/W
b7, b6	—	Reserved	These bits are read as 1. The write value should be 1.	R/W

The ELOPD register specifies the operations of TMR0 and TMR2 when an event signal is input. Set 11b (event output is disabled) when the ELC function is not used.

19.2.7 Event Link Port Setting Register m (PELm) (m = 0, 1)

Address(es): ELC.PEL0 0008 B129h, ELC.PEL1 0008 B12Ah

	b7	b6	b5	b4	b3	b2	b1	b0
	—	PSM[1:0]		PSP[1:0]		PSB[2:0]		
Value after reset:	1	0	0	0	0	0	0	0

Bit	Symbol	Bit Name	Description	R/W
b2 to b0	PSB[2:0]	Bit Number Specification	Set a bit number for a port to be specified as a single port.	R/W
b4, b3	PSP[1:0]	Port Number Specification	b4 b3 0 0: Setting disabled 0 1: Port B (corresponding to PGR1) 1 0: Setting prohibited 1 1: Setting prohibited	R/W
b6, b5	PSM[1:0]	Event Link Specification	• For the output port, specify the data to be output from the port. b6 b5 0 0: Low is output when an event signal is input. 0 1: High is output when an event signal is input. 1 x: The output is toggled (inverted) when an event signal is input. • For the input port, select the edge on which the event signal is to be output. b6 b5 0 0: Event signal is output upon detection of the rising edge. 0 1: Event signal is output upon detection of the falling edge. 1 x: Event signal is output upon detection of both the rising and falling edges.	R/W
b7	—	Reserved	This bit is read as 1. The write value should be 1.	R/W

x: Don’t care

The PELm register specifies the single port, the operation upon an event signal input, and the conditions of event generation. This MCU can specify a total of two bits in port B to respective single ports.
Specify the I/O direction of the port by the corresponding bit in the PDR register.

19.2.8 Event Link Software Event Generation Register (ELSEGR)

Address(es): ELC.ELSEGR 0008 B12Dh

	b7	b6	b5	b4	b3	b2	b1	b0
	WI	WE	—	—	—	—	—	SEG
Value after reset:	1	0	1	1	1	1	1	0

Bit	Symbol	Bit Name	Description	R/W
b0	SEG	Software Event Generation	0: Normal operation 1: Software event is generated.	W
b5 to b1	—	Reserved	These bits are read as 1. The write value should be 1.	R/W
b6	WE	SEG Bit Write Enable	0: Write to SEG bit is disabled. 1: Write to SEG bit is enabled.	R/W
b7	WI	ELSEGR Register Write Disable	0: Write to ELSEGR register is enabled. 1: Write to ELSEGR register is disabled.	W

The MOV instruction must be used to write to this register.

SEG Bit (Software Event Generation)

When 1 is written to this bit while the WE bit is 1, a software event is generated.
This bit is read as 0. Even if 1 is written to this bit, this bit does not become 1.

WE Bit (SEG Bit Write Enable)

The SEG bit can be written to only when the WE bit is 1.
To set this bit to 1, write 0 to the WI bit and write 1 to this bit simultaneously.
To set this bit to 0, write 0 to the WI bit and write 0 to this bit simultaneously.

WI Bit (ELSEGR Register Write Disable)

The ELSEGR register can be written to only when the value to be written to the WI bit is 0.
This bit is read as 1.

19.3 Operation

19.3.1 Relation between Interrupt Handling and Event Linking

The peripheral modules incorporated in the MCU are provided with the interrupt request status flags and the interrupt enable bits to enable/disable these interrupt requests. When an interrupt request is generated in a peripheral module, the corresponding interrupt request status flag becomes 1. If the corresponding interrupt request is enabled then, the interrupt is requested to the CPU.

In contrast, the event link controller (ELC) uses the interrupt requests generated by various peripheral modules as event signals, interconnects (links) peripheral modules, and then, makes peripheral modules perform direct interlinked operation among them without using software. Event signals can be output regardless of the setting of the corresponding interrupt enable bit.

Figure 19.2 shows the relation between the interrupt handling and ELC.

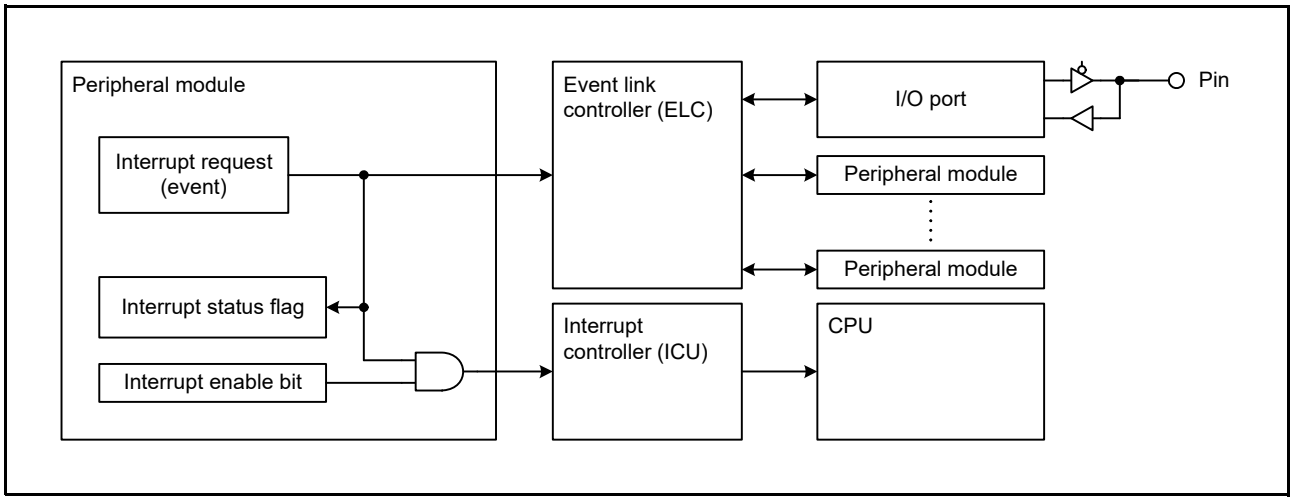

Figure 19.2 Relation between Interrupt Handling and ELC

19.3.2 Event Linkage

When events are specified in the ELSRn registers, the corresponding peripheral modules can be operated at generation of the specified events. A single peripheral module can link only with a single event. Set the ELSRn register after completing the initialization of the peripheral module to operate by an event. Table 19.4 lists the operations of peripheral modules when an event signal is input.

Table 19.4 Operations of Peripheral Modules When Event Signal is Input

Peripheral Module	Operations When Event Signal is Input
MTU CMT TMR	The following operations can be selected by setting the ELOPA to ELOPD registers: • Starts counting when an event signal is input. • Restarts counting when an event signal is input. • Counts the input events (CMT, TMR). • Performs input-capture operation when an event signal is input (MTU).
POE	The MTU complementary PWM output pins and MTU0 output pins become high-impedance when an event signal is input.
A/D converter	Starts A/D conversion when an event signal is input.
Delta-sigma A/D converter	Starts A/D conversion when an event signal is input.
I/O ports (output)	The value of PODR register (port output data register) changes to the specified value when an event signal is input (The level output from the corresponding pin changes).
I/O ports (input)	When the signal level of the input pin changes, an event is generated.
Clock generation circuit	Switches the clock source to the low-speed on-chip oscillator when an event signal is input.*1
Interrupt controller	Request an interrupt to the CPU, starts DMA transfer, or starts DTC transfer when an event signal is input.

Note 1. The SCKCR3.CKSEL[2:0] bits are modified to 000b (LOCO) regardless of the value of the protect register (PRCR.PRC0).

19.3.3 Operation of Peripheral Timer Modules When Event Signal is Input

For the timer modules, set the ELOPA to ELOPD register to specify the operation for when an event signal is input.

(1) Count Start Operation

When an event signal is input, the timer starts counting and the count start bit*1 in each timer control register becomes 1. An event signal that is input while the count start bit is 1 is ignored.

(2) Count Restart Operation

When an event signal is input, the timer counter is cleared. Since the count start bit*1 in each timer control register is retained, counting is restarted when an event signal is input while the count start bit is 1.

(3) Event Counter Operation

Event signal is selected as the timer count source. When an event signal is input, the timer counter is incremented.

(4) Input Capture Operation

When an event signal is input, the timer performs input-capture operation.

Note 1. Refer to the register descriptions on starting the timer in the relevant peripheral timer module section.

19.3.4 Operation of A/D Converter When Event Signal is Input

When an event signal is input, the ADCSR.ADST bit*1 is set to 1 and the A/D converter start A/D conversion.

Note 1. Refer to the bit description in the A/D converter section.

19.3.5 I/O Port Operation When Event Signal is Input and Event Generation

The I/O port operation at an event signal input and conditions for event generation are set by the registers in ELC. The I/O port that is used to set an event linkage is port B.

(1) Single Ports

In the event link to single ports, events can be interconnected to any one of the I/O ports.
A single port can be set by the PELm.PSP[1:0] and PSB[2:0] bits (m = 0, 1).
Set the PDR register to select the direction of the I/O ports.

(2) Event Generation in Single Input Ports

A single port that is set as input generates an event signal when the input signal to the corresponding pin changes. The event generation condition is specified using the PELm.PSM[1:0] bits (m = 0, 1). An example of operation is shown in Figure 19.3 (1).

(3) Single Output Ports Operation When Event Signal is Input

When an event signal is input to a single port set as output, the output level (the PODR register value) of the corresponding pin changes as specified by the PELm.PSM[1:0] bits. An example of operation is shown in Figure 19.3 (2).

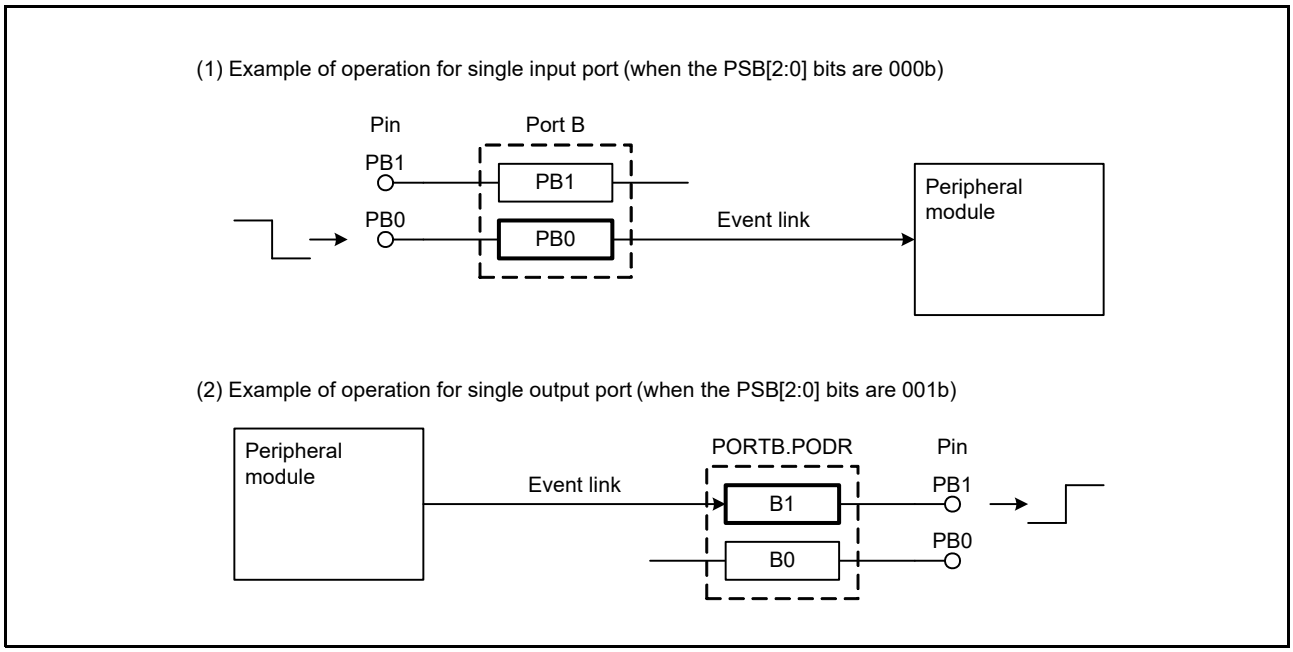

Figure 19.3 Event Linkage Related to Single Ports (Port B)

(4) Restrictions on Writing to PODR Register

When the ELCR.ELCON bit is 1 (ELC function is enabled), write access to the PODR register becomes disabled at the following conditions.

- When a port is specified as a single output port and when the event linkage for the port is set by the ELSRn register, write access to the corresponding bit in the PODR register becomes disabled.

19.3.6 Example of Procedure for Linking Events

The following describes the procedure for linking events.

(1) Initialize the peripheral module (destination) that operates based on an event signal.
(2) When event linkage is set to a port, set the following registers corresponding to the port.
PODR register: Set the initial values of the output ports.
PDR register: Set the I/O direction of the ports.
PELm register: When a port is operated as a single port, specify the port to be used, an operation of the port at an input of event signal, and the event generation condition (m = 0, 1).
(3) Set the number of the event signal to the ELSRn register corresponding to the destination peripheral module.
(4) To link an event to a timer module, set any of the ELOPA to ELOPD registers corresponding to the timer as required.
(5) Set the ELCR.ELCON bit to 1, which enables linkage of all the events.
(6) Set the operation of the peripheral module (source) from which an event signal is output, and activate the module. The preset operation of the destination peripheral module is started by the event signal that is output from the source peripheral module.
(7) To stop event linkage of independent peripheral module, set 00h to the ELSRn register corresponding to the peripheral module. To stop linkage of all the events, set the ELCR.ELCON bit to 0.

Note: When using event signal output from the LVD, set the LVD and then the ELC. Set the corresponding ELSRn register to 00h and then disable the LVD.

19.4 Usage Notes

19.4.1 Setting ELSRn Register

(1) Setting ELSR8 Register

Set this register to 32h (LPT compare match 0).

(2) Setting ELSR18 and ELSR19 Registers

Specify an event number from among 65h to 6Ah. Do not set the value other than preceding numbers.

19.4.2 Linking DMA/DTC Transfer End Signal as Event

When linking the DMA/DTC transfer end signal as an event signal, do not set the same peripheral module as the DMA/DTC transfer destination and event link destination. If set, the peripheral module might be started before DMA/DTC transfer to the peripheral module is completed.

19.4.3 Clock Settings

To link events, make sure that the ELC and the related peripheral modules are in an operational condition. The peripheral modules cannot operate if they are in the module stop state or in mode which they stop (software standby mode).

19.4.4 Module Stop Function Setting

ELC operation can be disabled or enabled using module stop control register B (MSTPCRB). After reset is released, the ELC function is disabled. Register access is enabled by releasing the module stop state. For details, refer to section 11, Low Power Consumption.

20. I/O Ports

20.1 Overview

The I/O ports function as a general I/O port, an I/O pin of a peripheral module, an input pin for an interrupt, or a bus control pin.

Some of the pins are also configurable as an I/O pin of a peripheral module or an input pin for an interrupt. All pins function as input pins immediately after a reset, and pin functions are switched by register settings. The setting of each pin is specified by the registers for the corresponding I/O port and on-chip peripheral modules.

Each port has the port direction register (PDR) that selects input or output direction, the port output data register (PODR) that holds data for output, the port input data register (PIDR) that indicates the pin states, the open drain control register y (ODRy, y = 0, 1) that selects the output type of each pin, the pull-up control register (PCR) that controls on/off of the input pull-up MOS, the drive capacity control register (DSCR) that selects the drive capacity, and the port mode register (PMR) that specifies the pin function of each port.

For details on the PMR register, see section 21, Multi-Function Pin Controller (MPC).

The configuration of the I/O ports differs depending on the package. Table 20.1 lists the specifications of I/O ports, and Table 20.2 list the port functions.

Table 20.1 Specifications of I/O Ports

	RX23E-A Group			
	Package		Package	
Port	48 Pins	Number of Pins	40 Pins	Number of Pins
PORT1	P14 to P17	4	P14 to P17	4
PORT2	P26, P27	2	P26, P27	2
PORT3	P30, P31, P35 to P37	5	P30, P31, P35 to P37	5
PORTB	PB0, PB1	2	PB0, PB1	2
PORTC	PC4 to PC7	4	PC4, PC5	2
PORTH	PH0 to PH3	4	PH0, PH1	2
	Total number of pins	21	Total number of pins	17

Table 20.2 Port Functions

Port	Pin	Input Pull-up	Open Drain Output	Drive Capacity Switching	5-V Tolerant
PORT1	P16, P17	✓	✓	✓	✓
	P14, P15	✓	✓	✓	—
PORT2	P26, P27	✓	✓	✓	—
PORT3	P30, P31	✓	✓	✓	—
	P35	—	—	—	—
	P36, P37	✓	✓	Fixed to normal output	—
PORTB	PB0, PB1	✓	✓	✓	—
PORTC	PC4 to PC7	✓	✓	✓	—
PORTH	PH0 to PH3	✓	✓	✓	—

Specifying input pull-up, open-drain output, switching of drive capacity, or 5-V tolerance is available for other signals on pins that also function as general I/O pins.

20.2 I/O Port Configuration

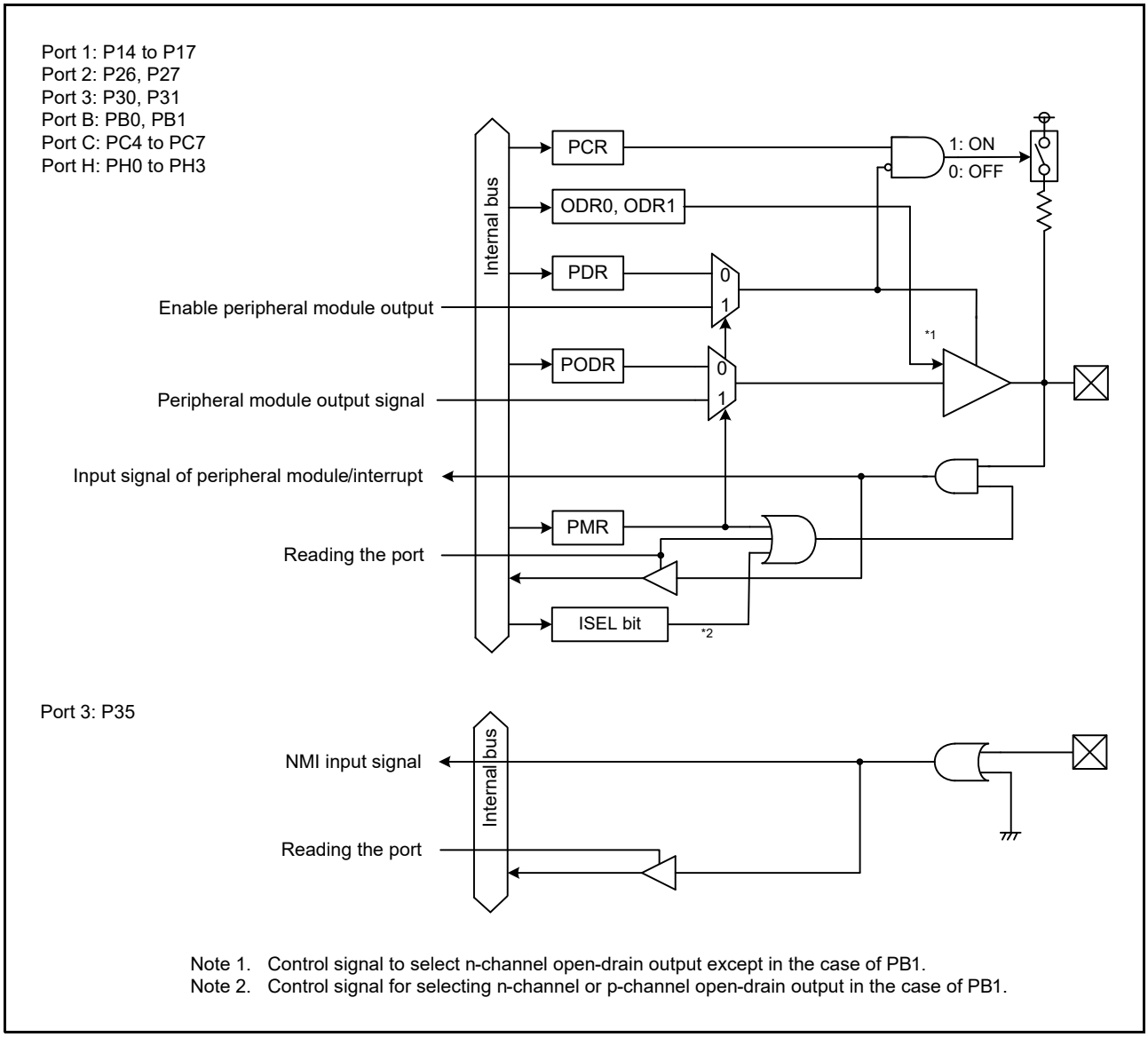

Note 1. Control signal to select n-channel open-drain output except in the case of PB1.
Note 2. Control signal for selecting n-channel or p-channel open-drain output in the case of PB1.

Figure 20.1 I/O Port Configuration (1)

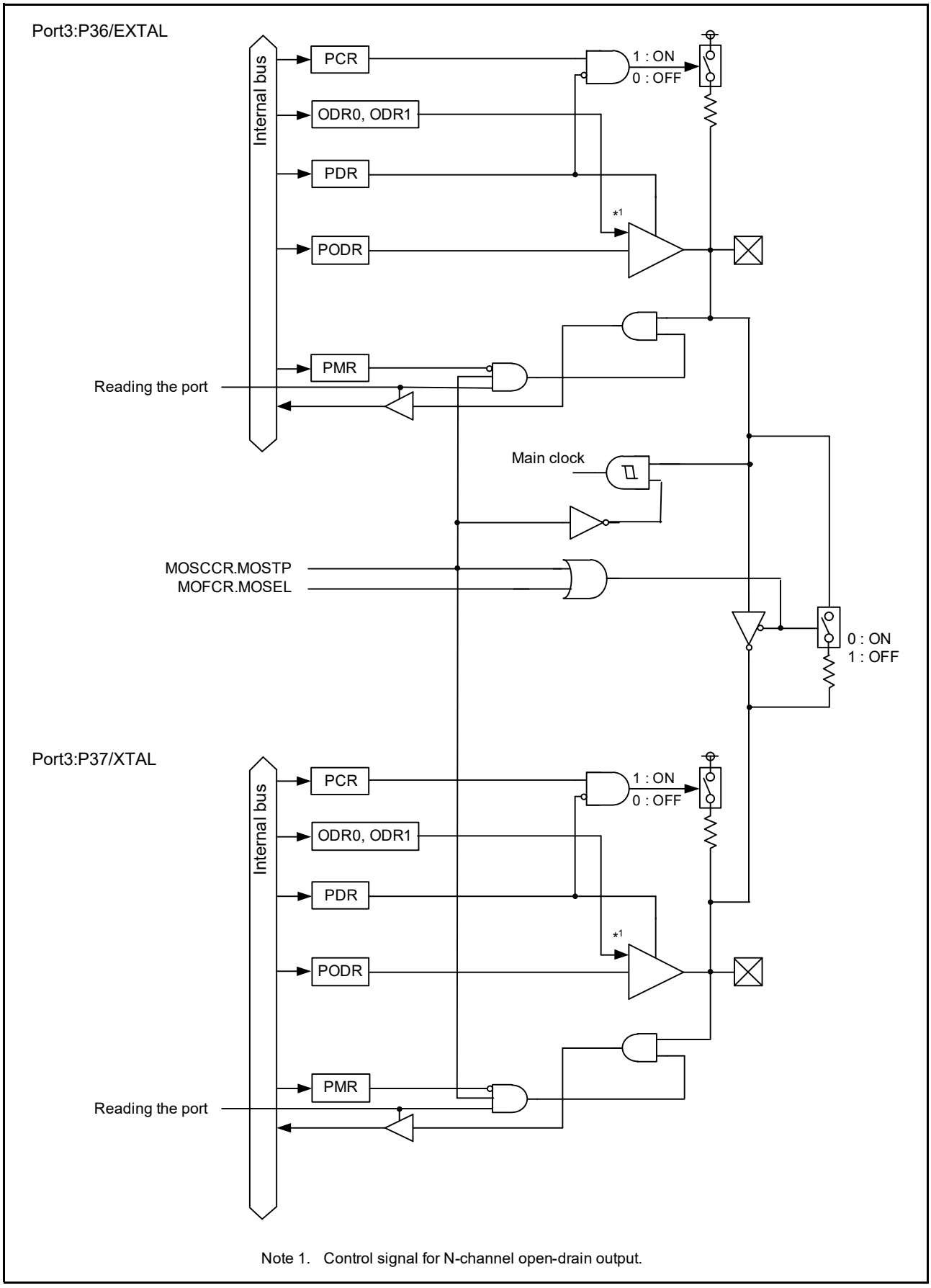

Note 1. Control signal for N-channel open-drain output.

Figure 20.2 I/O Port Configuration (2)

20.3 Register Descriptions

20.3.1 Port Direction Register (PDR)

Address(es): PORT1.PDR 0008 C001h, PORT2.PDR 0008 C002h, PORT3.PDR 0008 C003h, PORTB.PDR 0008 C00Bh, PORTC.PDR 0008 C00Ch, PORTH.PDR 0008 C011h

	b7	b6	b5	b4	b3	b2	b1	b0
	B7	B6	B5	B4	B3	B2	B1	B0
Value after reset:	0	0	0	0	0	0	0	0

Bit	Symbol	Bit Name	Description	R/W
b0	B0	Pm0 I/O Select	0: Input (Functions as an input pin.) 1: Output (Functions as an output pin.)	R/W
b1	B1	Pm1 I/O Select		R/W
b2	B2	Pm2 I/O Select		R/W
b3	B3	Pm3 I/O Select		R/W
b4	B4	Pm4 I/O Select		R/W
b5	B5	Pm5 I/O Select		R/W
b6	B6	Pm6 I/O Select		R/W
b7	B7	Pm7 I/O Select		R/W

m = 1 to 3, B, C, H

PDR is used to select the input or output direction for individual pins of the corresponding port m when the pins are configured as the general I/O pins.
Each bit of PORTm.PDR corresponds to each pin of port m; I/O direction can be specified in 1-bit units.
The PORT3.PDR.B5 bit is reserved, because the P35 pin is input only. The bit corresponding to a pin that does not exist is also reserved. A reserved bit is read as 0. The write value should be 0.

20.3.2 Port Output Data Register (PODR)

Address(es): PORT1.PODR 0008 C021h, PORT2.PODR 0008 C022h, PORT3.PODR 0008 C023h, PORTB.PODR 0008 C02Bh, PORTC.PODR 0008 C02Ch, PORTH.PODR 0008 C031h

	b7	b6	b5	b4	b3	b2	b1	b0
	B7	B6	B5	B4	B3	B2	B1	B0
Value after reset:	0	0	0	0	0	0	0	0

Bit	Symbol	Bit Name	Description	R/W
b0	B0	Pm0 Output Data Store	Holds output data.	R/W
b1	B1	Pm1 Output Data Store		R/W
b2	B2	Pm2 Output Data Store		R/W
b3	B3	Pm3 Output Data Store		R/W
b4	B4	Pm4 Output Data Store		R/W
b5	B5	Pm5 Output Data Store		R/W
b6	B6	Pm6 Output Data Store		R/W
b7	B7	Pm7 Output Data Store		R/W

m = 1 to 3, B, C, H

PODR holds the data to be output from the pins used for general output ports.
The PORT3.PODR.B5 bit is reserved, because the P35 pin is input only. The bit corresponding to a pin that does not exist is also reserved. A reserved bit is read as 0. The write value should be 0.

20.3.3 Port Input Data Register (PIDR)

Address(es): PORT1.PIDR 0008 C041h, PORT2.PIDR 0008 C042h, PORT3.PIDR 0008 C043h, PORTB.PIDR 0008 C04Bh, PORTC.PIDR 0008 C04Ch, PORTH.PIDR 0008 C051h

	b7	b6	b5	b4	b3	b2	b1	b0
	B7	B6	B5	B4	B3	B2	B1	B0
Value after reset:	x	x	x	x	x	x	x	x

x: Undefined

Bit	Symbol	Bit Name	Description	R/W
b0	B0	Pm0	Indicates individual pin states of the corresponding port.	R
b1	B1	Pm1		R
b2	B2	Pm2		R
b3	B3	Pm3		R
b4	B4	Pm4		R
b5	B5	Pm5		R
b6	B6	Pm6		R
b7	B7	Pm7		R

m = 1 to 3, B, C, H

PIDR indicates individual pin states of port m.
The pin states of port m can be read with the PORTm.PIDR, regardless of the values of PORTm.PDR and PORTm.PMR.
The NMI pin state is reflected in the P35 bit.
The bit corresponding to a pin that does not exist is reserved. A reserved bit is read as undefined, and cannot be modified.

Note: When using P36 and P37 as general I/O ports, set the MOSCCR.MOSTP bit to 1 (main clock oscillator is stopped) and the P36 and P37 control bits in the PORT3.PMR register to 0 (use pin as general I/O port).

20.3.4 Port Mode Register (PMR)

Address(es): PORT1.PMR 0008 C061h, PORT2.PMR 0008 C062h, PORT3.PMR 0008 C063h, PORTB.PMR 0008 C06Bh, PORTC.PMR 0008 C06Ch, PORTH.PMR 0008 C071h

	b7	b6	b5	b4	b3	b2	b1	b0
	B7	B6	B5	B4	B3	B2	B1	B0
Value after reset:	0	0	0	0	0	0	0	0

Bit	Symbol	Bit Name	Description	R/W
b0	B0	Pm0 Pin Mode Control	0: Use pin as general I/O port. 1: Use pin as I/O port for peripheral functions.	R/W
b1	B1	Pm1 Pin Mode Control		R/W
b2	B2	Pm2 Pin Mode Control		R/W
b3	B3	Pm3 Pin Mode Control		R/W
b4	B4	Pm4 Pin Mode Control		R/W
b5	B5	Pm5 Pin Mode Control		R/W
b6	B6	Pm6 Pin Mode Control		R/W
b7	B7	Pm7 Pin Mode Control		R/W

m = 1 to 3, B, C, H

Each bit of PORTm.PMR corresponds to each pin of port m; pin function can be specified in 1-bit units.
The bit corresponding to a pin that does not exist is reserved. A reserved bit is read as 0. The write value should be 0.

20.3.5 Open Drain Control Register 0 (ODR0)

Address(es): PORT3.ODR0 0008 C086h, PORTB.ODR0 0008 C096h, PORTH.ODR0 0008 C0A2h

	b7	b6	b5	b4	b3	b2	b1	b0
	B7	B6	B5	B4	B3	B2	B1	B0
Value after reset:	0	0	0	0	0	0	0	0

Bit	Symbol	Bit Name	Description	R/W
b0	B0	Pm0 Output Type Select	0: CMOS output 1: N-channel open-drain	R/W
b1	B1	Reserved	This bit is read as 0. The write value should be 0.	R/W
b2	B2	Pm1 Output Type Select	• P31, PH1 b2 0: CMOS output 1: N-channel open-drain b3 This bit is read as 0. The write value should be 0. • PB1 b3 b2 0 0: CMOS output 0 1: N-channel open-drain 1 0: P-channel open-drain 1 1: Do not make this setting.	R/W
b3	B3			R/W
b4	B4	Pm2 Output Type Select	0: CMOS output 1: N-channel open-drain	R/W
b5	B5	Reserved	This bit is read as 0. The write value should be 0.	R/W
b6	B6	Pm3 Output Type Select	0: CMOS output 1: N-channel open-drain	R/W
b7	B7	Reserved	This bit is read as 0. The write value should be 0.	R/W

m = 3, B, H

The bit corresponding to a pin that does not exist is reserved. A reserved bit is read as 0. The write value should be 0.

20.3.6 Open Drain Control Register 1 (ODR1)

Address(es): PORT1.ODR1 0008 C083h, PORT2.ODR1 0008 C085h, PORT3.ODR1 0008 C087h, PORTC.ODR1 0008 C099h

	b7	b6	b5	b4	b3	b2	b1	b0
	B7	B6	B5	B4	B3	B2	B1	B0
Value after reset:	0	0	0	0	0	0	0	0

Bit	Symbol	Bit Name	Description	R/W
b0	B0	Pm4 Output Type Select	0: CMOS output 1: N-channel open-drain	R/W
b1	B1	Reserved	This bit is read as 0. The write value should be 0.	R/W
b2	B2	Pm5 Output Type Select	0: CMOS output 1: N-channel open-drain	R/W
b3	B3	Reserved	This bit is read as 0. The write value should be 0.	R/W
b4	B4	Pm6 Output Type Select	0: CMOS output 1: N-channel open-drain	R/W
b5	B5	Reserved	This bit is read as 0. The write value should be 0.	R/W
b6	B6	Pm7 Output Type Select	0: CMOS output 1: N-channel open-drain	R/W
b7	B7	Reserved	This bit is read as 0. The write value should be 0.	R/W

m = 1 to 3, C

The PORT3.ODR1.B2 bit is reserved, because the P35 pin is input only. The bit corresponding to a pin that does not exist is reserved. A reserved bit is read as 0. The write value should be 0.

20.3.7 Pull-Up Control Register (PCR)

Address(es): PORT1.PCR 0008 C0C1h, PORT2.PCR 0008 C0C2h, PORT3.PCR 0008 C0C3h, PORTB.PCR 0008 C0CBh, PORTC.PCR 0008 C0CCh, PORTH.PCR 0008 C0D1h

	b7	b6	b5	b4	b3	b2	b1	b0
	B7	B6	B5	B4	B3	B2	B1	B0
Value after reset:	0	0	0	0	0	0	0	0

Bit	Symbol	Bit Name	Description	R/W
b0	B0	Pm0 Input Pull-Up Resistor Control	0: Disables an input pull-up resistor. 1: Enables an input pull-up resistor.	R/W
b1	B1	Pm1 Input Pull-Up Resistor Control		R/W
b2	B2	Pm2 Input Pull-Up Resistor Control		R/W
b3	B3	Pm3 Input Pull-Up Resistor Control		R/W
b4	B4	Pm4 Input Pull-Up Resistor Control		R/W
b5	B5	Pm5 Input Pull-Up Resistor Control		R/W
b6	B6	Pm6 Input Pull-Up Resistor Control		R/W
b7	B7	Pm7 Input Pull-Up Resistor Control		R/W

m = 1 to 3, B, C, H

While a pin is in the input state with the corresponding bit in PORTm.PCR set to 1, the pull-up resistor connected to the pin is enabled.
The pull-up resistors are disabled regardless of the setting of the PCR register if a pin is in use as an output pin of a general I/O port or a peripheral module.
The pull-up resistor is also disabled in the reset state.
The PORT3.PCR.B5 is reserved. The bit corresponding to a pin that does not exist is also reserved. A reserved bit is read as 0. The write value should be 0.

20.3.8 Drive Capacity Control Register (DSCR)

Address(es): PORT1.DSCR 0008 C0E1h, PORT2.DSCR 0008 C0E2h, PORT3.DSCR 0008 C0E3h, PORTB.DSCR 0008 C0EBh, PORTC.DSCR 0008 C0ECh, PORTH.DSCR 0008 C0F1h

	b7	b6	b5	b4	b3	b2	b1	b0
	B7	B6	B5	B4	B3	B2	B1	B0
Value after reset:	0	0	0	0	0	0	0	0

Bit	Symbol	Bit Name	Description	R/W
b0	B0	Pm0 Drive Capacity Control	0: Normal drive output 1: High-drive output	R/W
b1	B1	Pm1 Drive Capacity Control		R/W
b2	B2	Pm2 Drive Capacity Control		R/W
b3	B3	Pm3 Drive Capacity Control		R/W
b4	B4	Pm4 Drive Capacity Control		R/W
b5	B5	Pm5 Drive Capacity Control		R/W
b6	B6	Pm6 Drive Capacity Control		R/W
b7	B7	Pm7 Drive Capacity Control		R/W

m = 1 to 3, B, C, H

The bit corresponding to a pin with the fixed drive capacity can be read from or written to. However, the drive capacity cannot be changed.

When high-drive output is selected, switching noise increases compared to when normal output is selected. Carefully evaluate the effect of noise on the MCU caused by adjacent pins before selecting high-drive output.

The bit corresponding to a pin that does not exist is reserved. A reserved bit is read as 0. The write value should be 0.

20.4 Initialization of the Port Direction Register (PDR)

Initialize reserved bits in the PDR register according to Table 20.3 and Table 20.4.

- The blank columns in Table 20.3 and Table 20.4 indicate the bits corresponding to the pins listed in Table 20.1, Specifications of I/O Ports.
  The corresponding bits should be set to 1 (output) or 0 (input) depending on the user system.
  However, the PORT3.PDR.B5 bit of the input-only P35 pin is reserved.
  This bit should be set to 0 (input).
- The columns other than the blank columns in Table 20.3 and Table 20.4 indicate reserved bits.
  A reserved bit should be set to 0 (input) or 1 (output) according to Table 20.3 and Table 20.4.
  When setting a value to a reserved bit, access in byte units.

Table 20.3 PDR Register Settings in 48-Pin Packages

	PDR Register							
Port Symbol	**b7**	**b6**	**b5**	**b4**	**b3**	**b2**	**b1**	**b0**
PORT1					1	1	1	1
PORT2			1	1	1	1	1	1
PORT3			0	1	1	1		
PORTB	1	1	1	1	1	1		
PORTC					1	1	1	1
PORTH	1	1	1	1				

Table 20.4 PDR Register Settings in 40-Pin Packages

	PDR Register							
Port Symbol	**b7**	**b6**	**b5**	**b4**	**b3**	**b2**	**b1**	**b0**
PORT1					1	1	1	1
PORT2			1	1	1	1	1	1
PORT3			0	1	1	1		
PORTB	1	1	1	1	1	1		
PORTC	1	1			1	1	1	1
PORTH	1	1	1	1	1	1		

20.5 Handling of Unused Pins

The configuration of unused pins is listed in Table 20.5.

Table 20.5 Unused Pin Configuration

Pin Name	Description
MD	(Always used as mode pins)
RES#	Connect this pin to VCC via a pull-up resistor.
P35/NMI	Connect this pin to VCC via a pull-up resistor.
P36/EXTAL	When the main clock is not used, set the MOSCCR.MOSTP bit to 1 (general port P36). When this pin is not used as port P36 either, it is configured in the same way as port 1 to 3, B, C, and H.
P37/XTAL	When the main clock is not used, set the MOSCCR.MOSTP bit to 1 (general port P37). When this pin is not used as port P37 either, it is configured in the same way as port 1 to 3, B, C, and H. When the external clock is input to the EXTAL pin, leave this pin open.
Ports 1 to 3, Ports B, C, H	• If the direction setting is for input (PORTn.PDR = 0), the corresponding pin is connected to VCC (pulled up) via a resistor or to VSS (pulled down) via a resistor.*1 • If the direction setting is for output (PORTn.PDR = 1), the pin is released.*1, *2

Note 1. Clear the PORTn.PMR bit and the PmnPFS.ISEL bit to 0.

Note 2. In the case of release when the setting is for output, the port is an input over the period from release from the reset state to the pin becoming an output. Since the voltage on the pin is undefined while it is an input, this may lead to an increase in the current drawn.

21. Multi-Function Pin Controller (MPC)

21.1 Overview

The multi-function pin controller (MPC) is used to allocate input and output signals for peripheral modules and input interrupt signals to pins from among multiple ports.

Table 21.1 shows the allocation of pin functions to multiple pins. The symbols ✓ and — in the table indicate whether the pins are or are not present on the given package. Allocating the same function to more than one pin is prohibited.

Table 21.1 Functions Assigned to Each Multiplexed Pin (1/4)

Module/Function	Channel	Pin Functions	Allocation Port	Package 48-pin	Package 40-pin
Interrupt		NMI (input)	P35	✓	✓
Interrupt	IRQ0	IRQ0 (input)	P30	✓	✓
			PH1	✓	✓
	IRQ1	IRQ1 (input)	P31	✓	✓
			PH2	✓	—
	IRQ2	IRQ2 (input)	P26	✓	✓
	IRQ3	IRQ3 (input)	P27	✓	✓
	IRQ4	IRQ4 (input)	PB0	✓	✓
			P14	✓	✓
	IRQ5	IRQ5 (input)	P15	✓	✓
	IRQ6	IRQ6 (input)	P16	✓	✓
	IRQ7	IRQ7 (input)	P17	✓	✓
Clock generation circuit		CLKOUT (output)	PH1	✓	✓
Multi-function timer unit 2	MTU0	MTIOC0A (input/output)	P30	✓	✓
		MTIOC0B (input/output)	P15	✓	✓
		MTIOC0C (input/output)	PB0	✓	✓
		MTIOC0D (input/output)	PH0	✓	✓
	MTU1	MTIOC1A (input/output)	P31	✓	✓
		MTIOC1B (input/output)	PB1	✓	✓
	MTU2	MTIOC2A (input/output)	P26	✓	✓
			PB1	✓	✓
		MTIOC2B (input/output)	P27	✓	✓
	MTU3	MTIOC3A (input/output)	P14	✓	✓
			P17	✓	✓
			PC7	✓	—
		MTIOC3B (input/output)	P17	✓	✓
			PC5	✓	✓
		MTIOC3C (input/output)	P16	✓	✓
			PC6	✓	—
		MTIOC3D (input/output)	P16	✓	✓
			PC4	✓	✓
	MTU4	MTIOC4A (input/output)	P27	✓	✓
		MTIOC4B (input/output)	P30	✓	✓
		MTIOC4C (input/output)	P26	✓	✓
		MTIOC4D (input/output)	P31	✓	✓

Table 21.1 Functions Assigned to Each Multiplexed Pin (2/4)

Module/Function	Channel	Pin Functions	Allocation Port	Package 48-pin	Package 40-pin
Multi-function timer unit 2	MTU5	MTIC5U (input)	PH1	✓	—
		MTIC5V (input)	PH2	✓	—
		MTIC5W (input)	PH3	✓	—
	MTU	MTCLKA (input)	P14	✓	✓
			PH2	✓	—
			PC6	✓	—
		MTCLKB (input)	P15	✓	✓
			PH3	✓	—
			PC7	✓	—
		MTCLKC (input)	PH0	✓	✓
			PC4	✓	✓
		MTCLKD (input)	PH1	✓	✓
			PC5	✓	✓
Port output enable 2	POE0	POE0# (input)	PC4	✓	✓
	POE1	POE1# (input)	PB1	✓	✓
	POE2	POE2# (input)	PH1	✓	✓
			PH3	✓	—
	POE3	POE3# (input)	PB0	✓	✓
	POE8	POE8# (input)	P17	✓	✓
			P30	✓	✓
8-bit timer	TMR0	TMO0 (output)	P26	✓	✓
			PH1	✓	✓
		TMCI0 (input)	PB0	✓	✓
			PH3	✓	—
		TMRI0 (input)	PH0	✓	✓
			PH2	✓	—
	TMR1	TMO1 (output)	P17	✓	✓
		TMCI1 (input)	PC4	✓	✓
		TMRI1 (input)	PB1	✓	✓
	TMR2	TMO2 (output)	P16	✓	✓
			PC7	✓	—
		TMCI2 (input)	P15	✓	✓
			PC6	✓	—
		TMRI2 (input)	P14	✓	✓
			PC5	✓	✓
	TMR3	TMO3 (output)	P31	✓	✓
		TMCI3 (input)	P30	✓	✓
		TMRI3 (input)	P27	✓	✓

Table 21.1 Functions Assigned to Each Multiplexed Pin (3/4)

Module/Function	Channel	Pin Functions	Allocation Port	Package 48-pin	Package 40-pin
Serial communications interface	SCI1	RXD1 (input)/ SMISO1 (input/output)/ SSCL1 (input/output)	P15	✓	✓
			P30	✓	✓
		TXD1 (output)/ SMOSI1 (input/output)/ SSDA1 (input/output)	P16	✓	✓
			P26	✓	✓
		SCK1 (input/output)	P17	✓	✓
			P27	✓	✓
		CTS1# (input)/ RTS1# (output)/ SS1# (input)	P14	✓	✓
			P31	✓	✓
	SCI5	RXD5 (input)/ SMISO5 (input/output)/ SSCL5 (input/output)	PH0	✓	✓
		TXD5 (output)/ SMOSI5 (input/output)/ SSDA5 (input/output)	PH1	✓	✓
		SCK5 (input/output)	PH2	✓	—
			PC5	✓	✓
		CTS5# (input)/ RTS5# (output)/ SS5# (input)	PC4	✓	✓
	SCI6	RXD6 (input)/ SMISO6 (input/output)/ SSCL6 (input/output)	PC6	✓	—
		TXD6 (output)/ SMOSI6 (input/output)/ SSDA6 (input/output)	PC7	✓	—
		SCK6 (input/output)	PC5	✓	—
		CTS6# (input)/ RTS6# (output)/ SS6# (input)	PH3	✓	—
	SCI12	RXD12 (input)/ SMISO12 (input/output)/ SSCL12 (input/output)/ RXDX12 (input)	PB0	✓	✓
		TXD12 (output)/ SMOSI12 (input/output)/ SSDA12 (input/output)/ TXDX12 (output)/ SIOX12 (input/output)	PB1	✓	✓
		SCK12 (input/output)	PC5	✓	✓
		CTS12# (input)/ RTS12# (output)/ SS12# (input)	PC4	✓	✓
I^2C bus interface	RIIC0	SCL (input/output)	P16	✓	✓
		SDA (input/output)	P17	✓	✓

Table 21.1 Functions Assigned to Each Multiplexed Pin (4/4)

Module/Function	Channel	Pin Functions	Allocation Port	Package 48-pin	Package 40-pin
Serial peripheral interface	RSPI0	RSPCKA (input/output)	PH3	✓	—
			PC5	✓	✓
		MOSIA (input/output)	P16	✓	✓
			PH2	✓	—
			PC6	✓	—
		MISOA (input/output)	P17	✓	✓
			PC7	✓	—
		SSLA0 (input/output)	PH1	✓	✓
			PC4	✓	✓
		SSLA1 (input/output)	P15	✓	✓
		SSLA2 (input/output)	PH0	✓	✓
		SSLA3 (input/output)	P14	✓	✓
12-bit A/D converter		ADTRG0# (input)	P16	✓	✓
Clock frequency accuracy measurement circuit		CACREF (input)	PC7	✓	—
			PH0	✓	✓
RSCAN		CTXD0 (output)	P14	✓	✓
		CRXD0 (input)	P15	✓	✓

21.2 Register Descriptions

Registers and bits for pins that are not present due to differences according to the package are reserved. Write the value after a reset when writing to such bits.

21.2.1 Write-Protect Register (PWPR)

Address(es): PWPR 0008 C11Fh

	b7	b6	b5	b4	b3	b2	b1	b0
	B0WI	PFSWE	—	—	—	—	—	—
Value after reset:	1	0	0	0	0	0	0	0

Bit	Symbol	Bit Name	Description	R/W
b5 to b0	—	Reserved	These bits are read as 0. The write value should be 0.	R/W
b6	PFSWE	PFS Register Write Enable	0: Writing to the PFS register is disabled 1: Writing to the PFS register is enabled	R/W
b7	B0WI	PFSWE Bit Write Disable	0: Writing to the PFSWE bit is enabled 1: Writing to the PFSWE bit is disabled	R/W

PFSWE Bit (PFS Register Write Enable)

Writing to PmnPFS register is enabled only when the PFSWE bit is set to 1.
Write 1 to the PFSWE bit after writing 0 to the B0WI bit.

B0WI Bit (PFSWE Bit Write Disable)

Writing to the PFSWE bit is enabled only when the B0WI bit is set to 0.

21.2.2 P1n Pin Function Control Registers (P1nPFS) (n = 4 to 7)

Address(es): P14PFS 0008 C14Ch, P15PFS 0008 C14Dh, P16PFS 0008 C14Eh, P17PFS 0008 C14Fh

	b7	b6	b5	b4	b3	b2	b1	b0
	—	ISEL	—	PSEL[4:0]				
Value after reset:	0	0	0	0	0	0	0	0

Bit	Symbol	Bit Name	Description	R/W
b4 to b0	PSEL[4:0]	Pin Function Select	These bits select the peripheral function. For individual pin functions, see the tables below.	R/W
b5	—	Reserved	This bit is read as 0. The write value should be 0.	R/W
b6	ISEL	Interrupt Function Select	0: Not used as IRQn input pin 1: Used as IRQn input pin P14: IRQ4 P15: IRQ5 P16: IRQ6 P17: IRQ7	R/W
b7	—	Reserved	This bit is read as 0. The write value should be 0.	R/W

Table 21.2 Register Settings for Input/Output Pin Function

	Pin			
PSEL[4:0] Settings	**P14**	**P15**	**P16**	**P17**
00000b (initial value)	Hi-Z			
00001b	MTIOC3A	MTIOC0B	MTIOC3C	MTIOC3A
00010b	MTCLKA	MTCLKB	MTIOC3D	MTIOC3B
00101b	TMRI2	TMCI2	TMO2	TMO1
00111b	—	—	—	POE8#
01001b	—	—	ADTRG0#	—
01010b	—	RXD1 SMISO1 SSCL1	TXD1 SMOSI1 SSDA1	SCK1
01011b	CTS1# RTS1# SS1#	—	—	—
01101b	SSLA3	SSLA1	MOSIA	MISOA
01111b	—	—	SCL	SDA
10000b	CTXD0	CRXD0	—	—

—: Do not specify this value.

21.2.3 P2n Pin Function Control Register (P2nPFS) (n = 6, 7)

Address(es): P26PFS 0008 C156h, P27PFS 0008 C157h

	b7	b6	b5	b4	b3	b2	b1	b0
	—	ISEL	—	PSEL[4:0]				
Value after reset:	0	0	0	0	0	0	0	0

Bit	Symbol	Bit Name	Description	R/W
b4 to b0	PSEL[4:0]	Pin Function Select	These bits select the peripheral function. For individual pin functions, see the tables below.	R/W
b5	—	Reserved	This bit is read as 0. The write value should be 0.	R/W
b6	ISEL	Interrupt Function Select	0: Not used as IRQn input pin 1: Used as IRQn input pin P26: IRQ2 P27: IRQ3	R/W
b7	—	Reserved	This bit is read as 0. The write value should be 0.	R/W

Table 21.3 Register Settings for Input/Output Pin Function

	Pin	
PSEL[4:0] Settings	**P26**	**P27**
00000b (initial value)	Hi-Z	
00001b	MTIOC2A	MTIOC2B
00010b	MTIOC4C	MTIOC4A
00101b	TMO0	TMRI3
01010b	TXD1 SMOSI1 SSDA1	SCK1

21.2.4 P3n Pin Function Control Registers (P3nPFS) (n = 0, 1)

Address(es): P30PFS 0008 C158h, P31PFS 0008 C159h

	b7	b6	b5	b4	b3	b2	b1	b0
	—	ISEL	—	PSEL[4:0]				
Value after reset:	0	0	0	0	0	0	0	0

Bit	Symbol	Bit Name	Description	R/W
b4 to b0	PSEL[4:0]	Pin Function Select	These bits select the peripheral function. For individual pin functions, see the tables below.	R/W
b5	—	Reserved	This bit is read as 0. The write value should be 0.	R/W
b6	ISEL	Interrupt Input Function Select	0: Not used as IRQn input pin 1: Used as IRQn input pin P30: IRQ0 P31: IRQ1	R/W
b7	—	Reserved	This bit is read as 0. The write value should be 0.	R/W

Table 21.4 Register Settings for Input/Output Pin Function

	Pin	
PSEL[4:0] Settings	**P30**	**P31**
00000b (initial value)	Hi-Z	
00001b	MTIOC4B	MTIOC4D
00010b	MTIOC0A	MTIOC1A
00101b	TMCI3	TMO3
00111b	POE8#	—
01010b	RXD1 SMISO1 SSCL1	—
01011b	—	CTS1# RTS1# SS1#

—: Do not specify this value.

21.2.5 PBn Pin Function Control Registers (PBnPFS) (n = 0, 1)

Address(es): PB0PFS 0008 C198h, PB1PFS 0008 C199h

	b7	b6	b5	b4	b3	b2	b1	b0
	—	ISEL	—	PSEL[4:0]				
Value after reset:	0	0	0	0	0	0	0	0

Bit	Symbol	Bit Name	Description	R/W
b4 to b0	PSEL[4:0]	Pin Function Select	These bits select the peripheral function. For individual pin functions, see the tables below.	R/W
b5	—	Reserved	This bit is read as 0. The write value should be 0.	R/W
b6	ISEL	Interrupt Input Function Select	0: Not used as IRQn input pin 1: Used as IRQn input pin PB0: IRQ4	R/W
b7	—	Reserved	This bit is read as 0. The write value should be 0.	R/W

Table 21.5 Register Settings for Input/Output Pin Function

PSEL[4:0] Settings	Pin	
	PB0	**PB1**
00000b (initial value)	Hi-Z	
00001b	MTIOC0C	MTIOC2A
00010b	—	MTIOC1B
00101b	TMCI0	TMRI1
00111b	POE3#	POE1#
01100b	RXD12 RXDX12 SMISO12 SSCL12	TXD12 TXDX12 SIOX12 SMOSI12 SSDA12

—: Do not specify this value.

21.2.6 PCn Pin Function Control Registers (PCnPFS) (n = 4 to 7)

Address(es): PC4PFS 0008 C1A4h, PC5PFS 0008 C1A5h, PC6PFS 0008 C1A6h, PC7PFS 0008 C1A7h

	b7	b6	b5	b4	b3	b2	b1	b0
	—	—	—	PSEL[4:0]				
Value after reset:	0	0	0	0	0	0	0	0

Bit	Symbol	Bit Name	Description	R/W
b4 to b0	PSEL[4:0]	Pin Function Select	These bits select the peripheral function. For individual pin functions, see the tables below.	R/W
b7 to b5	—	Reserved	These bits are read as 0. The write value should be 0.	R/W

Table 21.6 Register Settings for Input/Output Pin Function

PSEL[4:0] Settings	Pin			
	PC4	PC5	PC6	PC7
00000b (initial value)	Hi-Z			
00001b	MTIOC3D	MTIOC3B	MTIOC3C	MTIOC3A
00010b	MTCLKC	MTCLKD	MTCLKA	MTCLKB
00101b	TMCI1	TMRI2	TMCI2	TMO2
00111b	POE0#	—	—	CACREF
01010b	—	SCK5	—	—
01011b	CTS5# RTS5# SS5#	SCK6	RXD6 SMISO6 SSCL6	TXD6 SMOSI6 SSDA6
01100b	CTS12# RTS12# SS12#	SCK12	—	—
01101b	SSLA0	RSPCKA	MOSIA	MISOA

—: Do not specify this value.

21.2.7 PHn Pin Function Control Registers (PHnPFS) (n = 0 to 3)

Address(es): PH0PFS 0008 C1C8h, PH1PFS 0008 C1C9h, PH2PFS 0008 C1CAh, PH3PFS 0008 C1CBh

	b7	b6	b5	b4	b3	b2	b1	b0
	—	ISEL	—	PSEL[4:0]				
Value after reset:	0	0	0	0	0	0	0	0

Bit	Symbol	Bit Name	Description	R/W
b4 to b0	PSEL[4:0]	Pin Function Select	These bits select the peripheral function. For individual pin functions, see the tables below.	R/W
b5	—	Reserved	This bit is read as 0. The write value should be 0.	R/W
b6	ISEL	Interrupt Input Function Select	0: Not used as IRQn input pin 1: Used as IRQn input pin PH1: IRQ0 PH2: IRQ1	R/W
b7	—	Reserved	This bit is read as 0. The write value should be 0.	R/W

Table 21.7 Register Settings for Input/Output Pin Function

	Pin			
PSEL[4:0] Settings	**PH0**	**PH1**	**PH2**	**PH3**
00000b (initial value)	Hi-Z			
00001b	MTIOC0D	MTIC5U	MTIC5V	MTIC5W
00010b	MTCLKC	MTCLKD	MTCLKA	MTCLKB
00101b	TMRI0	TMO0	TMRI0	TMCI0
00111b	CACREF	POE2#	—	POE2#
01001b	—	CLKOUT	—	—
01010b	RXD5 SMISO5 SSCL5	TXD5 SMOSI5 SSDA5	SCK5	—
01011b	—	—	—	CTS6# RTS6# SS6#
01101b	SSLA2	SSLA0	MOSIA	RSPCKA

—: Do not specify this value.

21.3 Usage Notes

21.3.1 Procedure for Specifying Input/Output Pin Function

Use the following procedure to specify the input/output pin functions.

(1) Clear the port direction register (PDR) and the port mode register (PMR) to 0 to select the general I/O port function.
(2) Specify the assignments of input/output signals for peripheral functions to the desired pins.
(3) Enable writing to the Pmn pin function control register (PmnPFS) through the write-protect register (PWPR) setting. (m = 1 to 3, B, C, H; n = 0 to 7)
(4) Specify the input/output function for the pin through the PSEL[4:0] bit settings in the PmnPFS register.
(5) Clear the PFSWE bit in the PWPR register to 0 to disable writing to the PmnPFS register.
(6) Set the PMR to 1 as necessary to switch to the selected input/output function for the pin.

21.3.2 Notes on MPC Register Setting

(1) Settings of the Pmn pin function control register (PmnPFS) should be made only while the PMR register for the target pin is cleared to 0. If a Pmn pin function control register is set while the PMR register is 1, unexpected edges may be input through the input pin or unexpected pulses are output through the output pin.
(2) Only the allowed values (functions) should be specified in the Pmn pin function control registers. If a value that is not allowed for the register is specified, correct operation is not guaranteed.
(3) Do not assign a single function to multiple pins through the MPC settings.
(4) Points to note regarding the port mode register (PMR), port direction register (PDR), and Pmn pin function control register (PmnPFS) settings for pins that have multiplexed pin functions are listed in Table 21.8.

Table 21.8 Register Settings

Item	PMR.Bn	PDR.Bn	PmnPFS		Point to Note
			ISEL	PSEL[4:0]	
After a reset	0	0	0	00000b	Pins function as general input port pins after release from the reset state.
General input ports	0	0	0/1	x	Set the ISEL bit to 1 if these are multiplexed with interrupt inputs.
General output ports	0	1	0	x	
Peripheral functions	1	x	0/1	Peripheral functions (see Table 21.2 to Table 21.7)	Set the ISEL bit to 1 if these are multiplexed with interrupt inputs.
Interrupt inputs	0	0	1	x	
NMI	x	x	x*1	x	Register settings are not required.
EXTAL/XTAL	0	0	x*1	x	Set these as general input port pins so that the output buffers are turned off.

x: Setting not required.
0/1: Setting the PmnPFS.ISEL bit to 0 makes the pin incapable of functioning as an IRQ pin.
Setting the PmnPFS.ISEL bit to 1 makes the pin capable of functioning as an IRQ pin (if the IRQ is selected from the multiplexed functions).
Note 1. The pin does not function as the IRQn input pin even if the PmnPFS.ISEL bit is set to 1.

Note:
- If the value of the PmnPFS.PSEL[4:0] bits is to be changed, do so while the PMR.Bn bit is 0.
- If an RIIC function is assigned to a port pin, clear the PCR.Bn (to 0); pulling up is automatically turned off for outputs from peripheral modules other than the RIIC.

22. Multi-Function Timer Pulse Unit 2 (MTU2a)

In this section, “PCLK” is used to refer to PCLKA.

22.1 Overview

This MCU has an on-chip multi-function timer pulse unit 2 (MTU). Each unit comprises a 16-bit timer with six channels (MTU0 to MTU5).

Table 22.1 lists the specifications of the MTU, and Table 22.2 lists the functions of the MTU. Figure 22.1 shows a block diagram of the MTU.

Table 22.1 MTU Specifications

Item	Description
Pulse input/output	16 lines max.
Pulse input	3 lines
Count clocks	Eight clocks or seven clocks for each channel (four clocks for MTU5)
Available operations	[MTU0 to MTU4] • Waveform output at compare match • Input capture function (noise filter set function) • Counter clear operation • Simultaneous writing to multiple timer counters (TCNT) • Simultaneous clearing by compare match or input capture • Simultaneous register input/output by synchronous counter operation • A maximum of 12-phase PWM output is available in combination with synchronous operation
	[MTU0, MTU3, MTU4] • Buffer operation specifiable • AC synchronous motor (brushless DC motor) drive mode using complementary PWM output and reset-synchronized PWM output is settable and the selection of two types of waveform outputs (chopping and level) is possible.
	[MTU1, MTU2] • Phase counting mode specifiable independently • Cascade connection operation
	[MTU3, MTU4] • Through interlocked operation, the positive and negative signals in six phases can be output in complementary PWM and reset-synchronized PWM operation.
	[MTU5] • Dead time compensation counter • Input capture function (noise filter set function) • Counter clear operation
Complementary PWM mode	• Interrupts at the crest and trough of the counter value • A/D conversion start triggers can be skipped
Interrupt sources	28 sources
Buffer operation	Automatic transfer of register data
Trigger generation	A/D conversion start trigger can be generated
Low power consumption function	Module stop state can be set.

Table 22.2 MTU Functions (1/3)

Item		MTU0	MTU1	MTU2	MTU3	MTU4	MTU5
Count clocks		PCLK/1 PCLK/4 PCLK/16 PCLK/64 MTCLKA MTCLKB MTCLKC MTCLKD	PCLK/1 PCLK/4 PCLK/16 PCLK/64 PCLK/256 MTCLKA MTCLKB	PCLK/1 PCLK/4 PCLK/16 PCLK/64 PCLK/1024 MTCLKA MTCLKB MTCLKC	PCLK/1 PCLK/4 PCLK/16 PCLK/64 PCLK/256 PCLK/1024 MTCLKA MTCLKB	PCLK/1 PCLK/4 PCLK/16 PCLK/64 PCLK/256 PCLK/1024 MTCLKA MTCLKB	PCLK/1 PCLK/4 PCLK/16 PCLK/64
External clocks for phase counting mode		—	MTCLKA MTCLKB	MTCLKC MTCLKD	—	—	—
General registers (TGR)		TGRA TGRB TGRE	TGRA TGRB	TGRA TGRB	TGRA TGRB	TGRA TGRB	TGRU TGRV TGRW
General registers/ buffer registers		TGRC TGRD TGRF	—	—	TGRC TGRD	TGRC TGRD	—
I/O pins		MTIOC0A MTIOC0B MTIOC0C MTIOC0D	MTIOC1A MTIOC1B	MTIOC2A MTIOC2B	MTIOC3A MTIOC3B MTIOC3C MTIOC3D	MTIOC4A MTIOC4B MTIOC4C MTIOC4D	Input pins MTIC5U MTIC5V MTIC5W
Counter clear function		TGR compare match or input capture	TGR compare match or input capture	TGR compare match or input capture	TGR compare match or input capture	TGR compare match or input capture	TGR compare match or input capture
Compare match output	Low output	✓	✓	✓	✓	✓	—
	High output	✓	✓	✓	✓	✓	—
	Toggle output	✓	✓	✓	✓	✓	—
Input capture function		✓	✓	✓	✓	✓	✓
Synchronous operation		✓	✓	✓	✓	✓	—
PWM mode 1		✓	✓	✓	✓	✓	—
PWM mode 2		✓	✓	✓	—	—	—
Complementary PWM mode		—	—	—	✓	✓	—
Reset-synchronized PWM		—	—	—	✓	✓	—
AC synchronous motor drive mode		✓	—	—	✓	✓	—
Phase counting mode		—	✓	✓	—	—	—
Buffer operation		✓	—	—	✓	✓	—
Dead time compensation counter function		—	—	—	—	—	✓
DMAC trigger sources		TGRA compare match or input capture	TGRA compare match or input capture	TGRA compare match or input capture	TGRA compare match or input capture	TGRA compare match or input capture	—
DTC trigger sources		TGR compare match or input capture	TGR compare match or input capture	TGR compare match or input capture	TGR compare match or input capture	TGR compare match or input capture and TCNT overflow or underflow	TGR compare match or input capture

Table 22.2 MTU Functions (2/3)

Item	MTU0	MTU1	MTU2	MTU3	MTU4	MTU5
A/D conversion start trigger	TGRA compare match or input capture TGRB compare match or input capture TGRE compare match TGRF compare match	TGRA compare match or input capture	TGRA compare match or input capture	TGRA compare match or input capture	TGRA compare match or input capture TCNT underflow (trough) in complementary PWM mode	—
Interrupt sources	7 sources • Compare match or input capture 0A • Compare match or input capture 0B • Compare match or input capture 0C • Compare match or input capture 0D • Compare match 0E • Compare match 0F • Overflow	4 sources • Compare match or input capture 1A • Compare match or input capture 1B • Overflow • Underflow	4 sources • Compare match or input capture 2A • Compare match or input capture 2B • Overflow • Underflow	5 sources • Compare match or input capture 3A • Compare match or input capture 3B • Compare match or input capture 3C • Compare match or input capture 3D • Overflow	5 sources • Compare match or input capture 4A • Compare match or input capture 4B • Compare match or input capture 4C • Compare match or input capture 4D • Overflow or underflow	3 sources • Compare match or input capture 5U • Compare match or input capture 5V • Compare match or input capture 5W
Event link function (output)	—	4 sources • Compare match 1A • Compare match 1B • Overflow • Underflow	4 sources • Compare match 2A • Compare match 2B • Overflow • Underflow	6 sources • Compare match 3A • Compare match 3B • Compare match 3C • Compare match 3D • Overflow • Underflow	6 sources • Compare match 4A • Compare match 4B • Compare match 4C • Compare match 4D • Overflow • Underflow	—
Event link function (input)	—	(1) Count start operation (2) Input capture operation (TRGA capture) (3) Count restart operation	(1) Count start operation (2) Input capture operation (TRGA capture) (3) Count restart operation	(1) Count start operation (2) Input capture operation (TRGA capture) (3) Count restart operation	(1) Count start operation (2) Input capture operation (TRGA capture) (3) Count restart operation	—
A/D conversion start request delaying function	—	—	—	—	A/D conversion start request at a match between TADCORA and TCNT or A/D conversion start request at a match between TADCORB and TCNT	—
Interrupt skipping function	—	—	—	Skips TGRA compare match interrupts	Skips TCIV interrupts	—

Table 22.2 MTU Functions (3/3)

Item	MTU0	MTU1	MTU2	MTU3	MTU4	MTU5
Module stop function	MSTPCRA.MSTPA9*1					

✓: Possible

—: Not possible

Note 1. For details on the module stop function, refer to section 11, Low Power Consumption.

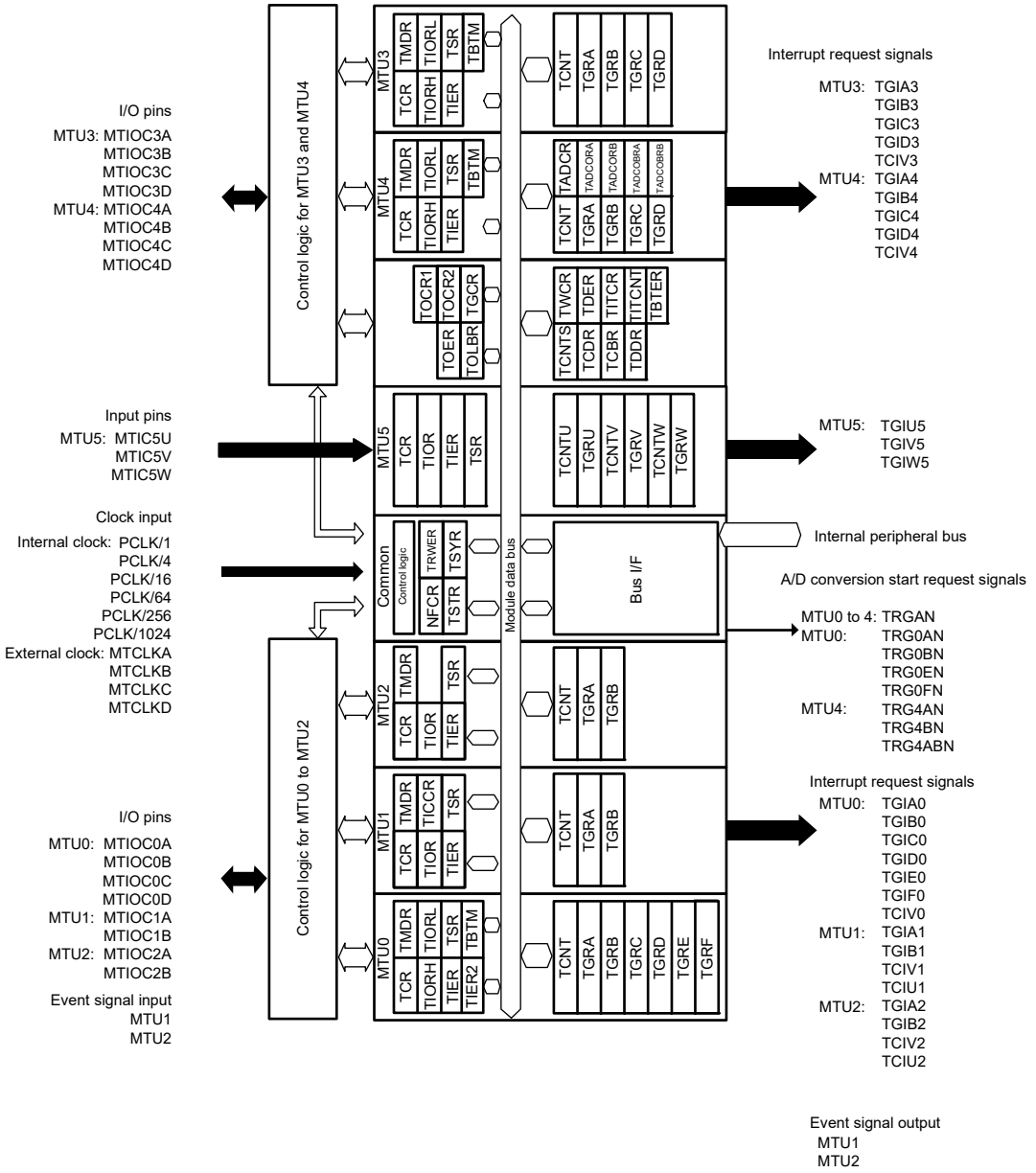

TSTR:	Timer start register
TSYR:	Timer synchronous register
TCR:	Timer control register
NFCR:	Noise filter control register
TMDR:	Timer mode register
TIOR:	Timer I/O control register
TIORH:	Timer I/O control register H
TIORL:	Timer I/O control register L
TIER:	Timer interrupt enable register
TIER2:	Timer interrupt enable register 2
TGCR:	Timer gate control register
TOER:	Timer output master enable register
TOCR1:	Timer output control register 1
TOCR2:	Timer output control register 2
TSR:	Timer status register
TBTM:	Timer buffer operation transfer mode register
TCNT, TCNTU, TCNTV, TCNTW:	Timer counter
TCNTS:	Timer subcounter
TRWER:	Timer read/write enable register
TOLBR:	Timer output level buffer register
TCDR:	Timer cycle data register
TCBR:	Timer cycle buffer register
TDDR:	Timer dead time data register
TGRA:	Timer general register A
TGRB:	Timer general register B
TGRC:	Timer general register C
TGRD:	Timer general register D
TGRE:	Timer general register E
TGRF:	Timer general register F
TGRU:	Timer general register U
TGRV:	Timer general register V
TGRW:	Timer general register W
TICCR:	Timer input capture control register
TWCR:	Timer waveform control register
TADCR:	Timer A/D conversion start request control register
TADCORA:	Timer A/D conversion start request cycle set register A
TADCORB:	Timer A/D conversion start request cycle set register B
TADCOBRA:	Timer A/D conversion start request cycle set buffer register A
TADCOBRB:	Timer A/D conversion start request cycle set buffer register B
TITCR:	Timer interrupt skipping set registers
TITCNT:	Timer interrupt skipping counters register
TBTER:	Timer buffer transfer set register
TDER:	Timer dead time enable register

Figure 22.1 MTU Block Diagram

Table 22.3 lists the I/O pins to be used by the MTU.

Table 22.3 MTU I/O Pins

Module Symbol	Pin Name	I/O	Function
MTU	MTCLKA	Input	External clock A input pin (MTU1 phase counting mode A phase input)
	MTCLKB	Input	External clock B input pin (MTU1 phase counting mode B phase input)
	MTCLKC	Input	External clock C input pin (MTU2 phase counting mode A phase input)
	MTCLKD	Input	External clock D input pin (MTU2 phase counting mode B phase input)
MTU0	MTIOC0A	I/O	MTU0.TGRA input capture input/output compare output/PWM output pin
	MTIOC0B	I/O	MTU0.TGRB input capture input/output compare output/PWM output pin
	MTIOC0C	I/O	MTU0.TGRC input capture input/output compare output/PWM output pin
	MTIOC0D	I/O	MTU0.TGRD input capture input/output compare output/PWM output pin
MTU1	MTIOC1A	I/O	MTU1.TGRA input capture input/output compare output/PWM output pin
	MTIOC1B	I/O	MTU1.TGRB input capture input/output compare output/PWM output pin
MTU2	MTIOC2A	I/O	MTU2.TGRA input capture input/output compare output/PWM output pin
	MTIOC2B	I/O	MTU2.TGRB input capture input/output compare output/PWM output pin
MTU3	MTIOC3A	I/O	MTU3.TGRA input capture input/output compare output/PWM output pin
	MTIOC3B	I/O	MTU3.TGRB input capture input/output compare output/PWM output pin
	MTIOC3C	I/O	MTU3.TGRC input capture input/output compare output/PWM output pin
	MTIOC3D	I/O	MTU3.TGRD input capture input/output compare output/PWM output pin
MTU4	MTIOC4A	I/O	MTU4.TGRA input capture input/output compare output/PWM output pin
	MTIOC4B	I/O	MTU4.TGRB input capture input/output compare output/PWM output pin
	MTIOC4C	I/O	MTU4.TGRC input capture input/output compare output/PWM output pin
	MTIOC4D	I/O	MTU4.TGRD input capture input/output compare output/PWM output pin
MTU5	MTIC5U	Input	MTU5.TGRU input capture input/external pulse input pin
	MTIC5V	Input	MTU5.TGRV input capture input/external pulse input pin
	MTIC5W	Input	MTU5.TGRW input capture input/external pulse input pin

22.2 Register Descriptions

22.2.1 Timer Control Register (TCR)

- MTU0.TCR, MTU1.TCR, MTU2.TCR, MTU3.TCR, MTU4.TCR

Address(es): MTU0.TCR 000D 0B00h, MTU1.TCR 000D 0B80h, MTU2.TCR 000D 0C00h, MTU3.TCR 000D 0A00h, MTU4.TCR 000D 0A01h

	b7	b6	b5	b4	b3	b2	b1	b0
	CCLR[2:0]			CKEG[1:0]		TPSC[2:0]		
Value after reset:	0	0	0	0	0	0	0	0

Bit	Symbol	Bit Name	Description	R/W
b2 to b0	TPSC[2:0]	Time Prescaler Select	Refer to Table 22.6 to Table 22.9.	R/W
b4, b3	CKEG[1:0]	Clock Edge Select	b4 b3 0 0: Count at rising edge 0 1: Count at falling edge 1 x: Count at both edges	R/W
b7 to b5	CCLR[2:0]	Counter Clear	Refer to Table 22.4 and Table 22.5.	R/W

x: Don't care

- MTU5.TCRU, MTU5.TCRV, MTU5.TCRW

Address(es): MTU5.TCRU 000D 0C84h, MTU5.TCRV 000D 0C94h, MTU5.TCRW 000D 0CA4h

	b7	b6	b5	b4	b3	b2	b1	b0
	—	—	—	—	—	—	TPSC[1:0]	
Value after reset:	0	0	0	0	0	0	0	0

Bit	Symbol	Bit Name	Description	R/W
b1, b0	TPSC[1:0]	Time Prescaler Select	Refer to Table 22.10.	R/W
b7 to b2	—	Reserved	These bits are read as 0. The write value should be 0.	R/W

The MTU has a total of eight TCR registers, one each for MTU0 to MTU4 and three (TCRU, TCRV, and TCRW) for MTU5.
The TCR register controls the TCNT operation for each channel. The TCR register values should be specified only while the TCNT operation is stopped.

TPSC[2:0] Bits (Time Prescaler Select)

These bits select the TCNT count clock source. The count clock source can be selected independently for each channel. Refer to Table 22.6 to Table 22.10 for details.

CKEG[1:0] Bits (Clock Edge Select)

These bits select the clock edge. When the internal clock is counted at both edges, the count clock period is halved (e.g. PCLK/4 at both edges = PCLK/2 at rising edge). If phase counting mode is used on MTU1 and MTU2, the setting of these bits is ignored and the phase counting mode setting has priority. Internal clock edge selection is valid when the count clock source is PCLK/4 or slower. When PCLK/1 or the overflow/underflow in another channel is selected for the count clock source, a value can be written to these bits but counter operation compiles with the initial value.

CCLR[2:0] Bits (Counter Clear)

These bits select the TCNT counter clearing source. Refer to Table 22.4 and Table 22.5 for details.

Table 22.4 CCLR[2:0] (MTU0, MTU3, and MTU4)

Channel	Bit 7 CCLR[2]	Bit 6 CCLR[1]	Bit 5 CCLR[0]	Description
MTU0, MTU3, MTU4	0	0	0	TCNT clearing disabled
	0	0	1	TCNT cleared by TGRA compare match/input capture
	0	1	0	TCNT cleared by TGRB compare match/input capture
	0	1	1	TCNT cleared by counter clearing in another channel performing synchronous clearing/synchronous operation*1
	1	0	0	TCNT clearing disabled
	1	0	1	TCNT cleared by TGRC compare match/input capture*2
	1	1	0	TCNT cleared by TGRD compare match/input capture*2
	1	1	1	TCNT cleared by counter clearing in another channel performing synchronous clearing/synchronous operation*1

Note 1. Synchronous operation is selected by setting the TSYR.SYNCn bit (n = 0, 3, 4) to 1.
Note 2. When TGRC or TGRD is used as a buffer register, TCNT is not cleared because the buffer register setting has priority and compare match/input capture does not occur.

Table 22.5 CCLR[2:0] (MTU1 and MTU2)

Channel	Bit 7 Reserved*2	Bit 6 CCLR[1]	Bit 5 CCLR[0]	Description
MTU1, MTU2	0	0	0	TCNT clearing disabled
	0	0	1	TCNT cleared by TGRA compare match/input capture
	0	1	0	TCNT cleared by TGRB compare match/input capture
	0	1	1	TCNT cleared by counter clearing in another channel performing synchronous clearing/synchronous operation*1

Note 1. Synchronous operation is selected by setting the TSYR.SYNCn bit (n = 1, 2) to 1.
Note 2. Bit 7 is reserved in MTU1 and MTU2. This bit is read as 0. The write value should be 0.

Table 22.6 TPSC[2:0] (MTU0)

Channel	Bit 2 TPSC[2]	Bit 1 TPSC[1]	Bit 0 TPSC[0]	Description
MTU0	0	0	0	Internal clock: counts on PCLK/1
	0	0	1	Internal clock: counts on PCLK/4
	0	1	0	Internal clock: counts on PCLK/16
	0	1	1	Internal clock: counts on PCLK/64
	1	0	0	External clock: counts on MTCLKA pin input
	1	0	1	External clock: counts on MTCLKB pin input
	1	1	0	External clock: counts on MTCLKC pin input
	1	1	1	External clock: counts on MTCLKD pin input

Table 22.7 TPSC[2:0] (MTU1)

Channel	Bit 2 TPSC[2]	Bit 1 TPSC[1]	Bit 0 TPSC[0]	Description
MTU1	0	0	0	Internal clock: counts on PCLK/1
	0	0	1	Internal clock: counts on PCLK/4
	0	1	0	Internal clock: counts on PCLK/16
	0	1	1	Internal clock: counts on PCLK/64
	1	0	0	External clock: counts on MTCLKA pin input
	1	0	1	External clock: counts on MTCLKB pin input
	1	1	0	Internal clock: counts on PCLK/256
	1	1	1	Counts on MTU2.TCNT overflow/underflow

Note: This setting is ignored when MTU1 is in phase counting mode.

Table 22.8 TPSC[2:0] (MTU2)

Channel	Bit 2 TPSC[2]	Bit 1 TPSC[1]	Bit 0 TPSC[0]	Description
MTU2	0	0	0	Internal clock: counts on PCLK/1
	0	0	1	Internal clock: counts on PCLK/4
	0	1	0	Internal clock: counts on PCLK/16
	0	1	1	Internal clock: counts on PCLK/64
	1	0	0	External clock: counts on MTCLKA pin input
	1	0	1	External clock: counts on MTCLKB pin input
	1	1	0	External clock: counts on MTCLKC pin input
	1	1	1	Internal clock: counts on PCLK/1024

Note: This setting is ignored when MTU2 is in phase counting mode.

Table 22.9 TPSC[2:0] (MTU3 and MTU4)

Channel	Bit 2 TPSC[2]	Bit 1 TPSC[1]	Bit 0 TPSC[0]	Description
MTU3, MTU4	0	0	0	Internal clock: counts on PCLK/1
	0	0	1	Internal clock: counts on PCLK/4
	0	1	0	Internal clock: counts on PCLK/16
	0	1	1	Internal clock: counts on PCLK/64
	1	0	0	Internal clock: counts on PCLK/256
	1	0	1	Internal clock: counts on PCLK/1024
	1	1	0	External clock: counts on MTCLKA pin input
	1	1	1	External clock: counts on MTCLKB pin input

Table 22.10 TPSC[1:0] (MTU5)

Channel	Bit 1 TPSC[1]	Bit 0 TPSC[0]	Description
MTU5	0	0	Internal clock: counts on PCLK/1
	0	1	Internal clock: counts on PCLK/4
	1	0	Internal clock: counts on PCLK/16
	1	1	Internal clock: counts on PCLK/64

22.2.2 Timer Mode Register (TMDR)

Address(es): MTU0.TMDR 000D 0B01h, MTU1.TMDR 000D 0B81h, MTU2.TMDR 000D 0C01h, MTU3.TMDR 000D 0A02h, MTU4.TMDR 000D 0A03h

	b7	b6	b5	b4	b3	b2	b1	b0
	—	BFE	BFB	BFA	MD[3:0]			
Value after reset:	0	0	0	0	0	0	0	0

Bit	Symbol	Bit Name	Description	R/W
b3 to b0	MD[3:0]	Mode Select	These bits specify the timer operating mode. Refer to Table 22.11 for details.	R/W
b4	BFA	Buffer Operation A	0: TGRA and TGRC operate normally 1: TGRA and TGRC used together for buffer operation	R/W
b5	BFB	Buffer Operation B	0: TGRB and TGRD operate normally 1: TGRB and TGRD used together for buffer operation	R/W
b6	BFE	Buffer Operation E	0: MTU0.TGRE and MTU0.TGRF operate normally 1: MTU0.TGRE and MTU0.TGRF used together for buffer operation	R/W
b7	—	Reserved	This bit is read as 0. The write value should be 0.	R/W

The TMDR register specifies the operating mode of each channel. The TMDR register values should be specified only while the TCNT operation is stopped.

Table 22.11 Operating Mode Setting by MD[3:0] Bits

Bit 3	Bit 2	Bit 1	Bit 0						
MD[3]	MD[2]	MD[1]	MD[0]	Description	MTU0	MTU1	MTU2	MTU3	MTU4
0	0	0	0	Normal mode	✓	✓	✓	✓	✓
0	0	0	1	Setting prohibited					
0	0	1	0	PWM mode 1	✓	✓	✓	✓	✓
0	0	1	1	PWM mode 2	✓	✓	✓		
0	1	0	0	Phase counting mode 1		✓	✓		
0	1	0	1	Phase counting mode 2		✓	✓		
0	1	1	0	Phase counting mode 3		✓	✓		
0	1	1	1	Phase counting mode 4		✓	✓		
1	0	0	0	Reset-synchronized PWM mode*1				✓	
1	0	0	1	Setting prohibited					
1	0	1	x	Setting prohibited					
1	1	0	0	Setting prohibited					
1	1	0	1	Complementary PWM mode 1 (transfer at crest)*1				✓	
1	1	1	0	Complementary PWM mode 2 (transfer at trough)*1				✓	
1	1	1	1	Complementary PWM mode 3 (transfer at crest and trough)*1				✓	

x: Don't care

Note: Only set the corresponding operating mode listed above for each channel.

Note 1. Reset-synchronized PWM mode and complementary PWM mode can only be set for MTU3.
When MTU3 is set to reset-synchronized PWM mode or complementary PWM mode, the MTU4 settings become ineffective and conform to the MTU3 setting, respectively. MTU4 should be set to normal mode.

BFA Bit (Buffer Operation A)

This bit specifies normal operation for the TGRA register or buffered operation of the combination of registers TGRA and TGRC. When the TGRC register is used as a buffer register, the TGRC input capture/output compare does not take place in modes other than complementary PWM mode, but compare match with the TGRC register occurs in complementary PWM mode. If a compare match occurs on MTU4 in the Tb interval in complementary PWM mode, the MTU4.TIER.TGIEC bit should be set to 0.
When MTU3 or MTU4 is set to reset-synchronized PWM mode or complementary PWM mode, the buffer operation conforms to the MTU3 setting. Set the MTU4.TMDR.BFA bit to 0.
In MTU1 and MTU2, which have no TGRC register, this bit is reserved. It is read as 0. The write value should be 0.
Refer to Figure 22.40 for an illustration of the Tb interval in complementary PWM mode.

BFB Bit (Buffer Operation B)

This bit specifies normal operation for the TGRB register or buffered operation of the combination of registers TGRB and TGRD. When the TGRD register is used as a buffer register, the TGRD input capture/output compare does not take place in modes other than complementary PWM mode, but compare match with the TGRD register occurs in complementary PWM mode. If a compare match occurs in the Tb interval in complementary PWM mode, the MTU3.TIER.TGIED or MTU4.TIER.TGIED bit should be set to 0.
When MTU3 or MTU4 is set to reset-synchronized PWM mode or complementary PWM mode, the buffer operation conforms to the MTU3 setting. Set the MTU4.TMDR.BFB bit to 0.
In MTU1 and MTU2, which have no TGRD register, this bit is reserved. It is read as 0. The write value should be 0.
Refer to Figure 22.40 for an illustration of the Tb interval in complementary PWM mode.

BFE Bit (Buffer Operation E)

This bit specifies normal operation or buffered operation for registers MTU0.TGRE and MTU0.TGRF. Compare match with the TGRF register occurs even when the TGRF register is used as a buffer register.
In MTU1 to MTU4, this bit is reserved. It is read as 0. The write value should be 0.

22.2.3 Timer I/O Control Register (TIOR)

- MTU0.TIORH, MTU1.TIOR, MTU2.TIOR, MTU3.TIORH, MTU4.TIORH

Address(es): MTU0.TIORH 000D 0B02h, MTU1.TIOR 000D 0B82h, MTU2.TIOR 000D 0C02h, MTU3.TIORH 000D 0A04h, MTU4.TIORH 000D 0A06h

	b7	b6	b5	b4	b3	b2	b1	b0
	IOB[3:0]				IOA[3:0]			
Value after reset:	0	0	0	0	0	0	0	0

Bit	Symbol	Bit Name	Description	R/W
b3 to b0	IOA[3:0]	I/O Control A	Refer to the following tables.*1 MTU0.TIORH: Table 22.20 MTU1.TIOR: Table 22.22 MTU2.TIOR: Table 22.23 MTU3.TIORH: Table 22.24 MTU4.TIORH: Table 22.26	R/W
b7 to b4	IOB[3:0]	I/O Control B	Refer to the following tables.*1 MTU0.TIORH: Table 22.12 MTU1.TIOR: Table 22.14 MTU2.TIOR: Table 22.15 MTU3.TIORH: Table 22.16 MTU4.TIORH: Table 22.18	R/W

Note 1. If the IOm[3:0] (m = A, B) bits are changed to an “output prohibited” setting (0000b or 0100b) while output of the low or high level or toggling of the output in response to compare matches is in progress, the output becomes high-impedance.

- MTU0.TIORL, MTU3.TIORL, MTU4.TIORL

Address(es): MTU0.TIORL 000D 0B03h, MTU3.TIORL 000D 0A05h, MTU4.TIORL 000D 0A07h

	b7	b6	b5	b4	b3	b2	b1	b0
	IOD[3:0]				IOC[3:0]			
Value after reset:	0	0	0	0	0	0	0	0

Bit	Symbol	Bit Name	Description	R/W
b3 to b0	IOC[3:0]	I/O Control C	Refer to the following tables.*1 MTU0.TIORL: Table 22.21 MTU3.TIORL: Table 22.25 MTU4.TIORL: Table 22.27	R/W
b7 to b4	IOD[3:0]	I/O Control D	Refer to the following tables.*1 MTU0.TIORL: Table 22.13 MTU3.TIORL: Table 22.17 MTU4.TIORL: Table 22.19	R/W

Note 1. If the IOm[3:0] (m = C, D) bits are changed to an “output prohibited” setting (0000b or 0100b) while output of the low or high level or toggling of the output in response to compare matches is in progress, the output becomes high-impedance.

- MTU5.TIORU, MTU5.TIORV, MTU5.TIORW

Address(es): MTU5.TIORU 000D 0C86h, MTU5.TIORV 000D 0C96h, MTU5.TIORW 000D 0CA6h

	b7	b6	b5	b4	b3	b2	b1	b0
	—	—	—	IOC[4:0]				
Value after reset:	0	0	0	0	0	0	0	0

Bit	Symbol	Bit Name	Description	R/W
b4 to b0	IOC[4:0]	I/O Control C	Refer to the following table. MTU5.TIORU, MTU5.TIORV, MTU5.TIORW: Table 22.28	R/W
b7 to b5	—	Reserved	These bits are read as 0. The write value should be 0.	R/W

The MTU has a total of 11 TIOR registers, two each for MTU0, MTU3, and MTU4, one each for MTU1 and MTU2, and three (MTU5.TIORU/TIORV/TIORW) for MTU5.
The TIOR register should be set when the TMDR register is set to select normal mode, PWM mode, or phase counting mode.
The initial output specified by the TIOR register is valid when the counter is stopped (the TSTR.CSTn bit is set to 0).
Note also that, in PWM mode 2, the output at the point at which the counter is set to 0 is specified.
When the TGRC or TGRD register is designated for buffer operation, this setting is invalid and the register operates as a buffer register.

Table 22.12 TIORH (MTU0)

Bit 7	Bit 6	Bit 5	Bit 4	Description	
IOB[3]	**IOB[2]**	**IOB[1]**	**IOB[0]**	**MTU0.TGRB Function**	**MTIOC0B Pin Function**
0	0	0	0	Output compare register	Output prohibited
0	0	0	1		Initial output is low. Low output at compare match.
0	0	1	0		Initial output is low. High output at compare match.
0	0	1	1		Initial output is low. Toggle output at compare match.
0	1	0	0		Output prohibited
0	1	0	1		Initial output is high. Low output at compare match.
0	1	1	0		Initial output is high. High output at compare match.
0	1	1	1		Initial output is high. Toggle output at compare match.
1	0	0	0	Input capture register	Input capture at rising edge.
1	0	0	1		Input capture at falling edge.
1	0	1	x		Input capture at both edges.
1	1	x	x		Capture input source is count clock in MTU1. Input capture at MTU1.TCNT up-count/down-count.*1

x: Don't care

Note 1. When PCLK/1 is selected as the count clock for MTU1, MTU0 input capture is not generated. Do not select PCLK/1 as the count clock for MTU1.

Table 22.13 TIORL (MTU0)

Bit 7	Bit 6	Bit 5	Bit 4	Description	
IOD[3]	**IOD[2]**	**IOD[1]**	**IOD[0]**	**MTU0.TGRD Function**	**MTIOC0D Pin Function**
0	0	0	0	Output compare register*1	Output prohibited
0	0	0	1		Initial output is low. Low output at compare match.
0	0	1	0		Initial output is low. High output at compare match.
0	0	1	1		Initial output is low. Toggle output at compare match.
0	1	0	0		Output prohibited
0	1	0	1		Initial output is high. Low output at compare match.
0	1	1	0		Initial output is high. High output at compare match.
0	1	1	1		Initial output is high. Toggle output at compare match.
1	0	0	0	Input capture register*1	Input capture at rising edge.
1	0	0	1		Input capture at falling edge.
1	0	1	x		Input capture at both edges.
1	1	x	x		Capture input source is count clock in MTU1. Input capture at MTU1.TCNT up-count/down-count.*2

x: Don't care

Note 1. When the MTU0.TMDR.BFB is set to 1 and the MTU0.TGRD register is used as a buffer register, this setting is invalid and input capture/output compare is not generated.

Note 2. When PCLK/1 is selected as the count clock for MTU1, MTU0 input capture is not generated. Do not select PCLK/1 as the count clock for MTU1.

Table 22.14 TIOR (MTU1)

Bit 7	Bit 6	Bit 5	Bit 4	Description	
IOB[3]	**IOB[2]**	**IOB[1]**	**IOB[0]**	**MTU1.TGRB Function**	**MTIOC1B Pin Function**
0	0	0	0	Output compare register	Output prohibited
0	0	0	1		Initial output is low. Low output at compare match.
0	0	1	0		Initial output is low. High output at compare match.
0	0	1	1		Initial output is low. Toggle output at compare match.
0	1	0	0		Output prohibited
0	1	0	1		Initial output is high. Low output at compare match.
0	1	1	0		Initial output is high. High output at compare match.
0	1	1	1		Initial output is high. Toggle output at compare match.
1	0	0	0	Input capture register	Input capture at rising edge.
1	0	0	1		Input capture at falling edge.
1	0	1	x		Input capture at both edges.
1	1	x	x		Input capture at generation of MTU0.TGRC compare match/input capture.

x: Don't care

Table 22.15 TIOR (MTU2)

Bit 7	Bit 6	Bit 5	Bit 4	Description	
IOB[3]	**IOB[2]**	**IOB[1]**	**IOB[0]**	**MTU2.TGRB Function**	**MTIOC2B Pin Function**
0	0	0	0	Output compare register	Output prohibited
0	0	0	1		Initial output is low. Low output at compare match.
0	0	1	0		Initial output is low. High output at compare match.
0	0	1	1		Initial output is low. Toggle output at compare match.
0	1	0	0		Output prohibited
0	1	0	1		Initial output is high. Low output at compare match.
0	1	1	0		Initial output is high. High output at compare match.
0	1	1	1		Initial output is high. Toggle output at compare match.
1	x	0	0	Input capture register	Input capture at rising edge.
1	x	0	1		Input capture at falling edge.
1	x	1	x		Input capture at both edges.

x: Don't care

Table 22.16 TIORH (MTU3)

Bit 7	Bit 6	Bit 5	Bit 4	Description	
IOB[3]	**IOB[2]**	**IOB[1]**	**IOB[0]**	**MTU3.TGRB Function**	**MTIOC3B Pin Function**
0	0	0	0	Output compare register	Output prohibited
0	0	0	1		Initial output is low. Low output at compare match.
0	0	1	0		Initial output is low. High output at compare match.
0	0	1	1		Initial output is low. Toggle output at compare match.
0	1	0	0		Output prohibited
0	1	0	1		Initial output is high. Low output at compare match.
0	1	1	0		Initial output is high. High output at compare match.
0	1	1	1		Initial output is high. Toggle output at compare match.
1	x	0	0	Input capture register	Input capture at rising edge.
1	x	0	1		Input capture at falling edge.
1	x	1	x		Input capture at both edges.

x: Don't care

Table 22.17 TIORL (MTU3)

Bit 7	Bit 6	Bit 5	Bit 4	Description	
IOD[3]	**IOD[2]**	**IOD[1]**	**IOD[0]**	**MTU3.TGRD Function**	**MTIOC3D Pin Function**
0	0	0	0	Output compare register*1	Output prohibited
0	0	0	1		Initial output is low. Low output at compare match.
0	0	1	0		Initial output is low. High output at compare match.
0	0	1	1		Initial output is low. Toggle output at compare match.
0	1	0	0		Output prohibited
0	1	0	1		Initial output is high. Low output at compare match.
0	1	1	0		Initial output is high. High output at compare match.
0	1	1	1		Initial output is high. Toggle output at compare match.
1	x	0	0	Input capture register*1	Input capture at rising edge.
1	x	0	1		Input capture at falling edge.
1	x	1	x		Input capture at both edges.

x: Don't care

Note 1. When the MTU3.TMDR.BFB bit is set to 1 and the MTU3.TGRD register is used as a buffer register, this setting is invalid and input capture/output compare is not generated.

Table 22.18 TIORH (MTU4)

Bit 7	Bit 6	Bit 5	Bit 4	Description	
IOB[3]	**IOB[2]**	**IOB[1]**	**IOB[0]**	**MTU4.TGRB Function**	**MTIOC4B Pin Function**
0	0	0	0	Output compare register	Output prohibited
0	0	0	1		Initial output is low. Low output at compare match.
0	0	1	0		Initial output is low. High output at compare match.
0	0	1	1		Initial output is low. Toggle output at compare match.
0	1	0	0		Output prohibited
0	1	0	1		Initial output is high. Low output at compare match.
0	1	1	0		Initial output is high. High output at compare match.
0	1	1	1		Initial output is high. Toggle output at compare match.
1	x	0	0	Input capture register	Input capture at rising edge.
1	x	0	1		Input capture at falling edge.
1	x	1	x		Input capture at both edges.

x: Don't care

Table 22.19 TIORL (MTU4)

Bit 7	Bit 6	Bit 5	Bit 4	Description	
IOD[3]	**IOD[2]**	**IOD[1]**	**IOD[0]**	**MTU4.TGRD Function**	**MTIOC4D Pin Function**
0	0	0	0	Output compare register*1	Output prohibited
0	0	0	1		Initial output is low. Low output at compare match.
0	0	1	0		Initial output is low. High output at compare match.
0	0	1	1		Initial output is low. Toggle output at compare match.
0	1	0	0		Output prohibited
0	1	0	1		Initial output is high. Low output at compare match.
0	1	1	0		Initial output is high. High output at compare match.
0	1	1	1		Initial output is high. Toggle output at compare match.
1	x	0	0	Input capture register*1	Input capture at rising edge.
1	x	0	1		Input capture at falling edge.
1	x	1	x		Input capture at both edges.

x: Don't care

Note 1. When the MTU4.TMDR.BFB bit is set to 1 and the MTU4.TGRD register is used as a buffer register, this setting is invalid and input capture/output compare is not generated.

Table 22.20 TIORH (MTU0)

Bit 3	Bit 2	Bit 1	Bit 0	Description	
IOA[3]	**IOA[2]**	**IOA[1]**	**IOA[0]**	**MTU0.TGRA Function**	**MTIOC0A Pin Function**
0	0	0	0	Output compare register	Output prohibited
0	0	0	1		Initial output is low. Low output at compare match.
0	0	1	0		Initial output is low. High output at compare match.
0	0	1	1		Initial output is low. Toggle output at compare match.
0	1	0	0		Output prohibited
0	1	0	1		Initial output is high. Low output at compare match.
0	1	1	0		Initial output is high. High output at compare match.
0	1	1	1		Initial output is high. Toggle output at compare match.
1	0	0	0	Input capture register	Input capture at rising edge.
1	0	0	1		Input capture at falling edge.
1	0	1	x		Input capture at both edges.
1	1	x	x		Capture input source is count clock in MTU1. Input capture at MTU1.TCNT up-count/down-count.*1

x: Don't care

Note 1. When PCLK/1 is selected as the count clock for MTU1, MTU0 input capture is not generated. Do not select PCLK/1 as the count clock for MTU1.

Table 22.21 TIORL (MTU0)

Bit 3	Bit 2	Bit 1	Bit 0	Description	
IOC[3]	**IOC[2]**	**IOC[1]**	**IOC[0]**	**MTU0.TGRC Function**	**MTIOC0C Pin Function**
0	0	0	0	Output compare register*1	Output prohibited
0	0	0	1		Initial output is low. Low output at compare match.
0	0	1	0		Initial output is low. High output at compare match.
0	0	1	1		Initial output is low. Toggle output at compare match.
0	1	0	0		Output prohibited
0	1	0	1		Initial output is high. Low output at compare match.
0	1	1	0		Initial output is high. High output at compare match.
0	1	1	1		Initial output is high. Toggle output at compare match.
1	0	0	0	Input capture register*1	Input capture at rising edge.
1	0	0	1		Input capture at falling edge.
1	0	1	x		Input capture at both edges.
1	1	x	x		Capture input source is count clock in MTU1. Input capture at MTU1.TCNT up-count/down-count.*2

x: Don't care

Note 1. When the MTU0.TMDR.BFA bit is set to 1 and the MTU0.TGRC register is used as a buffer register, this setting is invalid and input capture/output compare is not generated.

Note 2. When PCLK/1 is selected as the count clock for MTU1, MTU0 input capture is not generated. Do not select PCLK/1 as the count clock for MTU1.

Table 22.22 TIOR (MTU1)

Bit 3	Bit 2	Bit 1	Bit 0	Description	
IOA[3]	**IOA[2]**	**IOA[1]**	**IOA[0]**	**MTU1.TGRA Function**	**MTIOC1A Pin Function**
0	0	0	0	Output compare register	Output prohibited
0	0	0	1		Initial output is low. Low output at compare match.
0	0	1	0		Initial output is low. High output at compare match.
0	0	1	1		Initial output is low. Toggle output at compare match.
0	1	0	0		Output prohibited
0	1	0	1		Initial output is high. Low output at compare match.
0	1	1	0		Initial output is high. High output at compare match.
0	1	1	1		Initial output is high. Toggle output at compare match.
1	0	0	0	Input capture register	Input capture at rising edge.
1	0	0	1		Input capture at falling edge.
1	0	1	x		Input capture at both edges.
1	1	x	x		Input capture at generation of MTU0.TGRA compare match/input capture.

x: Don't care

Table 22.23 TIOR (MTU2)

Bit 3	Bit 2	Bit 1	Bit 0	Description	
IOA[3]	**IOA[2]**	**IOA[1]**	**IOA[0]**	**MTU2.TGRA Function**	**MTIOC2A Pin Function**
0	0	0	0	Output compare register	Output prohibited
0	0	0	1		Initial output is low. Low output at compare match.
0	0	1	0		Initial output is low. High output at compare match.
0	0	1	1		Initial output is low. Toggle output at compare match.
0	1	0	0		Output prohibited
0	1	0	1		Initial output is high. Low output at compare match.
0	1	1	0		Initial output is high. High output at compare match.
0	1	1	1		Initial output is high. Toggle output at compare match.
1	x	0	0	Input capture register	Input capture at rising edge.
1	x	0	1		Input capture at falling edge.
1	x	1	x		Input capture at both edges.

x: Don't care

Table 22.24 TIORH (MTU3)

Bit 3	Bit 2	Bit 1	Bit 0	Description	
IOA[3]	**IOA[2]**	**IOA[1]**	**IOA[0]**	**MTU3.TGRA Function**	**MTIOC3A Pin Function**
0	0	0	0	Output compare register	Output prohibited
0	0	0	1		Initial output is low. Low output at compare match.
0	0	1	0		Initial output is low. High output at compare match.
0	0	1	1		Initial output is low. Toggle output at compare match.
0	1	0	0		Output prohibited
0	1	0	1		Initial output is high. Low output at compare match.
0	1	1	0		Initial output is high. High output at compare match.
0	1	1	1		Initial output is high. Toggle output at compare match.
1	x	0	0	Input capture register	Input capture at rising edge.
1	x	0	1		Input capture at falling edge.
1	x	1	x		Input capture at both edges.

x: Don't care

Table 22.25 TIORL (MTU3)

Bit 3	Bit 2	Bit 1	Bit 0	Description	
IOC[3]	**IOC[2]**	**IOC[1]**	**IOC[0]**	**MTU3.TGRC Function**	**MTIOC3C Pin Function**
0	0	0	0	Output compare register*1	Output prohibited
0	0	0	1		Initial output is low. Low output at compare match.
0	0	1	0		Initial output is low. High output at compare match.
0	0	1	1		Initial output is low. Toggle output at compare match.
0	1	0	0		Output prohibited
0	1	0	1		Initial output is high. Low output at compare match.
0	1	1	0		Initial output is high. High output at compare match.
0	1	1	1		Initial output is high. Toggle output at compare match.
1	x	0	0	Input capture register*1	Input capture at rising edge.
1	x	0	1		Input capture at falling edge.
1	x	1	x		Input capture at both edges.

x: Don't care

Note 1. When the MTU3.TMDR.BFA bit is set to 1 and the MTU3.TGRC register is used as a buffer register, this setting is invalid and input capture/output compare is not generated.

Table 22.26 TIORH (MTU4)

Bit 3	Bit 2	Bit 1	Bit 0	Description	
IOA[3]	**IOA[2]**	**IOA[1]**	**IOA[0]**	**MTU4.TGRA Function**	**MTIOC4A Pin Function**
0	0	0	0	Output compare register	Output prohibited
0	0	0	1		Initial output is low. Low output at compare match.
0	0	1	0		Initial output is low. High output at compare match.
0	0	1	1		Initial output is low. Toggle output at compare match.
0	1	0	0		Output prohibited
0	1	0	1		Initial output is high. Low output at compare match.
0	1	1	0		Initial output is high. High output at compare match.
0	1	1	1		Initial output is high. Toggle output at compare match.
1	x	0	0	Input capture register	Input capture at rising edge.
1	x	0	1		Input capture at falling edge.
1	x	1	x		Input capture at both edges.

x: Don't care

Table 22.27 TIORL (MTU4)

Bit 3	Bit 2	Bit 1	Bit 0	Description	
IOC[3]	**IOC[2]**	**IOC[1]**	**IOC[0]**	**MTU4.TGRC Function**	**MTIOC4C Pin Function**
0	0	0	0	Output compare register*1	Output prohibited
0	0	0	1		Initial output is low. Low output at compare match.
0	0	1	0		Initial output is low. High output at compare match.
0	0	1	1		Initial output is low. Toggle output at compare match.
0	1	0	0		Output prohibited
0	1	0	1		Initial output is high. Low output at compare match.
0	1	1	0		Initial output is high. High output at compare match.
0	1	1	1		Initial output is high. Toggle output at compare match.
1	x	0	0	Input capture register*1	Input capture at rising edge.
1	x	0	1		Input capture at falling edge.
1	x	1	x		Input capture at both edges.

x: Don't care

Note 1. When the MTU4.TMDR.BFA bit is set to 1 and the MTU4.TGRC register is used as a buffer register, this setting is invalid and input capture/output compare is not generated.

Table 22.28 TIORU, TIORV, and TIORW (MTU5)

Bit 4	Bit 3	Bit 2	Bit 1	Bit 0	Description	
IOC[4]	IOC[3]	IOC[2]	IOC[1]	IOC[0]	MTU5.TGRU, MTU5.TGRV, MTU5.TGRW Function	MTIC5U, MTIC5V, MTIC5W Pin Function
0	0	0	0	0	Compare match register	Compare match
0	0	0	0	1		Setting prohibited
0	0	0	1	x		Setting prohibited
0	0	1	x	x		Setting prohibited
0	1	x	x	x		Setting prohibited
1	0	0	0	0	Input capture register*1	Setting prohibited
1	0	0	0	1		Input capture at rising edge.
1	0	0	1	0		Input capture at falling edge.
1	0	0	1	1		Input capture at both edges.
1	0	1	x	x		Setting prohibited
1	1	0	0	0		Setting prohibited
1	1	0	0	1		Measurement of low pulse width of external input signal. Capture at trough in complementary PWM mode.
1	1	0	1	0		Measurement of low pulse width of external input signal. Capture at crest in complementary PWM mode.
1	1	0	1	1		Measurement of low pulse width of external input signal. Capture at crest and trough in complementary PWM mode.
1	1	1	0	0		Setting prohibited
1	1	1	0	1		Measurement of high pulse width of external input signal. Capture at trough in complementary PWM mode.
1	1	1	1	0		Measurement of high pulse width of external input signal. Capture at crest in complementary PWM mode.
1	1	1	1	1		Measurement of high pulse width of external input signal. Capture at crest and trough in complementary PWM mode.

x: Don't care

Note 1. Set the IOC[4:0] bits to 19h, 1Ah, 1Bh, 1Dh, 1Eh, or 1Fh only when using external pulse width measurement or only when using dead time compensation linked with MTU3 and MTU4. For details, refer to section 22.3.10, External Pulse Width Measurement and section 22.3.11, Dead Time Compensation.

22.2.4 Timer Compare Match Clear Register (TCNTCMPCLR)

Address(es): MTU5.TCNTCMPCLR 000D 0CB6h

	b7	b6	b5	b4	b3	b2	b1	b0
	—	—	—	—	—	CMPCLR5U	CMPCLR5V	CMPCLR5W
Value after reset:	0	0	0	0	0	0	0	0

Bit	Symbol	Bit Name	Description	R/W
b0	CMPCLR5W	TCNT Compare Clear 5W	0: Disables MTU5.TCNTW to be cleared to 0000h at MTU5.TCNTW and MTU5.TGRW compare match or input capture 1: Enables MTU5.TCNTW to be cleared to 0000h at MTU5.TCNTW and MTU5.TGRW compare match or input capture	R/W
b1	CMPCLR5V	TCNT Compare Clear 5V	0: Disables MTU5.TCNTV to be cleared to 0000h at MTU5.TCNTV and MTU5.TGRV compare match or input capture 1: Enables MTU5.TCNTV to be cleared to 0000h at MTU5.TCNTV and MTU5.TGRV compare match or input capture	R/W
b2	CMPCLR5U	TCNT Compare Clear 5U	0: Disables MTU5.TCNTU to be cleared to 0000h at MTU5.TCNTU and MTU5.TGRU compare match or input capture 1: Enables MTU5.TCNTU to be cleared to 0000h at MTU5.TCNTU and MTU5.TGRU compare match or input capture	R/W
b7 to b3	—	Reserved	These bits are read as 0. The write value should be 0.	R/W

The TCNTCMPCLR register specifies requests to clear counters MTU5.TCNTU, MTU5.TCNTV, and MTU5.TCNTW.

22.2.5 Timer Interrupt Enable Register (TIER)

- MTU0.TIER, MTU3.TIER

Address(es): MTU0.TIER 000D 0B04h, MTU3.TIER 000D 0A08h

	b7	b6	b5	b4	b3	b2	b1	b0
	TTGE	—	—	TCIEV	TGIED	TGIEC	TGIEB	TGIEA
Value after reset:	0	0	0	0	0	0	0	0

- MTU1.TIER, MTU2.TIER

Address(es): MTU1.TIER 000D 0B84h, MTU2.TIER 000D 0C04h

	b7	b6	b5	b4	b3	b2	b1	b0
	TTGE	—	TCIEU	TCIEV	—	—	TGIEB	TGIEA
Value after reset:	0	0	0	0	0	0	0	0

- MTU4.TIER

Address(es): MTU4.TIER 000D 0A09h

	b7	b6	b5	b4	b3	b2	b1	b0
	TTGE	TTGE2	—	TCIEV	TGIED	TGIEC	TGIEB	TGIEA
Value after reset:	0	0	0	0	0	0	0	0

Bit	Symbol	Bit Name	Description	R/W
b0	TGIEA	TGR Interrupt Enable A	0: Interrupt requests (TGIA) disabled 1: Interrupt requests (TGIA) enabled	R/W
b1	TGIEB	TGR Interrupt Enable B	0: Interrupt requests (TGIB) disabled 1: Interrupt requests (TGIB) enabled	R/W
b2	TGIEC	TGR Interrupt Enable C	0: Interrupt requests (TGIC) disabled 1: Interrupt requests (TGIC) enabled	R/W
b3	TGIED	TGR Interrupt Enable D	0: Interrupt requests (TGID) disabled 1: Interrupt requests (TGID) enabled	R/W
b4	TCIEV	Overflow Interrupt Enable	0: Interrupt requests (TCIV) disabled 1: Interrupt requests (TCIV) enabled	R/W
b5	TCIEU	Underflow Interrupt Enable	0: Interrupt requests (TCIU) disabled 1: Interrupt requests (TCIU) enabled	R/W
b6	TTGE2	A/D Conversion Start Request Enable 2	0: A/D conversion start request generation by MTU4.TCNT underflow (trough) disabled 1: A/D conversion start request generation by MTU4.TCNT underflow (trough) enabled	R/W
b7	TTGE	A/D Conversion Start Request Enable	0: A/D conversion start request generation disabled 1: A/D conversion start request generation enabled	R/W

The MTU has a total of seven TIER registers, two each for MTU0 and one each for MTU1 to MTU5.
The TIER register enables or disables interrupt requests in each channel.

TGIEA and TGIEB Bits (TGR Interrupt Enable A and B)

Each bit enables or disables interrupt requests (TGIm) (m = A, B).

TGIEC and TGIED Bits (TGR Interrupt Enable C and D)

Each bit enables or disables interrupt requests (TGIm) in MTU0, MTU3, and MTU4 (m = C, D).
In MTU1 and MTU2, these bits are reserved. They are read as 0. The write value should be 0.

TCIEV Bit (Overflow Interrupt Enable)

This bit enables or disables interrupt requests (TCIV).

TCIEU Bit (Underflow Interrupt Enable)

This bit enables or disables interrupt requests (TCIU) in MTU1 and MTU2.
In MTU0, MTU3, and MTU4, this bit is reserved. It is read as 0. The write value should be 0.

TTGE2 Bit (A/D Conversion Start Request Enable 2)

This bit enables or disables generation of A/D conversion start requests by MTU4.TCNT underflow (trough) in complementary PWM mode.
In MTU0 to MTU3, this bit is reserved. It is read as 0. The write value should be 0.

TTGE Bit (A/D Conversion Start Request Enable)

This bit enables or disables generation of A/D conversion start requests by the TGRA input capture/compare match.

- MTU0.TIER2

Address(es): MTU0.TIER2 000D 0B24h

	b7	b6	b5	b4	b3	b2	b1	b0
	—	—	—	—	—	—	TGIEF	TGIEE
Value after reset:	0	0	0	0	0	0	0	0

Bit	Symbol	Bit Name	Description	R/W
b0	TGIEE	TGR Interrupt Enable E	0: Interrupt requests (TGIE) disabled 1: Interrupt requests (TGIE) enabled	R/W
b1	TGIEF	TGR Interrupt Enable F	0: Interrupt requests (TGIF) disabled 1: Interrupt requests (TGIF) enabled	R/W
b7 to b2	—	Reserved	These bits are read as 0. The write value should be 0.	R/W

TGIEE and TGIEF Bits (TGR Interrupt Enable E and F)

Each bit enables or disables interrupt requests by compare match between the MTU0.TCNT counter and the MTU0.TGRm register (m = E, F).

- MTU5.TIER

Address(es): MTU5.TIER 000D 0CB2h

	b7	b6	b5	b4	b3	b2	b1	b0
	—	—	—	—	—	TGIE5U	TGIE5V	TGIE5W
Value after reset:	0	0	0	0	0	0	0	0

Bit	Symbol	Bit Name	Description	R/W
b0	TGIE5W	TGR Interrupt Enable 5W	0: Interrupt requests TGIW5 disabled 1: Interrupt requests TGIW5 enabled	R/W
b1	TGIE5V	TGR Interrupt Enable 5V	0: Interrupt requests TGIV5 disabled 1: Interrupt requests TGIV5 enabled	R/W
b2	TGIE5U	TGR Interrupt Enable 5U	0: Interrupt requests TGIU5 disabled 1: Interrupt requests TGIU5 enabled	R/W
b7 to b3	—	Reserved	These bits are read as 0. The write value should be 0.	R/W

TGIE5W, TGIE5V, and TGIE5U Bits (TGR Interrupt Enable 5m)

Each bit enables or disables interrupt requests (TGIm5) (m = W, V, U).

22.2.6 Timer Status Register (TSR)

Address(es): MTU0.TSR 000D 0B05h, MTU1.TSR 000D 0B85h, MTU2.TSR 000D 0C05h, MTU3.TSR 000D 0A2Ch, MTU4.TSR 000D 0A2Dh

	b7	b6	b5	b4	b3	b2	b1	b0
	TCFD	—	—	—	—	—	—	—
Value after reset:	1	1	x	x	x	x	x	x

x: Undefined

Bit	Symbol	Bit Name	Description	R/W
b5 to b0	—	Reserved	These bits are read as undefined. The write value should be 1.	R/W
b6	—	Reserved	This bit is read as 1. The write value should be 1.	R/W
b7	TCFD	Count Direction Flag	0: TCNT counts down 1: TCNT counts up	R

The MTU has a total of five TSR registers, one each for MTU0 to MTU4.
The TSR register indicates the status of each channel.

TCFD Flag (Count Direction Flag)

Status flag that shows the direction in which the TCNT counter counts in MTU1 to MTU4.
In MTU0, this bit is reserved. It is read as 1. The write value should be 1.

22.2.7 Timer Buffer Operation Transfer Mode Register (TBTM)

- MTU0.TBTM

Address(es): MTU0.TBTM 000D 0B26h

	b7	b6	b5	b4	b3	b2	b1	b0
	—	—	—	—	—	TTSE	TTSB	TTSA
Value after reset:	0	0	0	0	0	0	0	0

- MTU3.TBTM, MTU4.TBTM

Address(es): MTU3.TBTM 000D 0A38h, MTU4.TBTM 000D 0A39h

	b7	b6	b5	b4	b3	b2	b1	b0
	—	—	—	—	—	—	TTSB	TTSA
Value after reset:	0	0	0	0	0	0	0	0

Bit	Symbol	Bit Name	Description	R/W
b0	TTSA	Timing Select A	0: When compare match A occurs in each channel, data is transferred from TGRC to TGRA 1: When TCNT is cleared in each channel, data is transferred from TGRC to TGRA	R/W
b1	TTSB	Timing Select B	0: When compare match B occurs in each channel, data is transferred from TGRD to TGRB 1: When TCNT is cleared in each channel, data is transferred from TGRD to TGRB	R/W
b2	TTSE	Timing Select E	0: When compare match E occurs in MTU0, data is transferred from MTU0.TGRF to MTU0.TGRE 1: When MTU0.TCNT is cleared in MTU0, data is transferred from MTU0.TGRF to MTU0.TGRE	R/W
b7 to b3	—	Reserved	These bits are read as 0. The write value should be 0.	R/W

The MTU has a total of three TBTM registers, one each for MTU0, MTU3, and MTU4.
The TBTM register specifies the timing for transferring data from the buffer register to the timer general register in PWM mode.

TTSA Bit (Timing Select A)

This bit specifies the timing for transferring data from the TGRC register to the TGRA register in each channel when they are used together for buffer operation. When a channel is not set to PWM mode, do not set the TTSA bit in the channel to 1.

TTSB Bit (Timing Select B)

This bit specifies the timing for transferring data from the TGRD register to the TGRB register in each channel when they are used together for buffer operation. When a channel is not set to PWM mode, do not set the TTSB bit in the channel to 1.

TTSE Bit (Timing Select E)

This bit specifies the timing for transferring data from the MTU0.TGRF register to the MTU0.TGRE register when they are used together for buffer operation. In MTU3 and MTU4, this bit is reserved and read as 0. The write value should be 0. When MTU0 is not set to PWM mode, do not set the TTSE bit to 1.

22.2.8 Timer Input Capture Control Register (TICCR)

Address(es): MTU1.TICCR 000D 0B90h

	b7	b6	b5	b4	b3	b2	b1	b0
	—	—	—	—	I2BE	I2AE	I1BE	I1AE
Value after reset:	0	0	0	0	0	0	0	0

Bit	Symbol	Bit Name	Description	R/W
b0	I1AE	Input Capture Enable	0: Does not include the MTIOC1A pin in the MTU2.TGRA input capture conditions 1: Includes the MTIOC1A pin in the MTU2.TGRA input capture conditions	R/W
b1	I1BE	Input Capture Enable	0: Does not include the MTIOC1B pin in the MTU2.TGRB input capture conditions 1: Includes the MTIOC1B pin in the MTU2.TGRB input capture conditions	R/W
b2	I2AE	Input Capture Enable	0: Does not include the MTIOC2A pin in the MTU1.TGRA input capture conditions 1: Includes the MTIOC2A pin in the MTU1.TGRA input capture conditions	R/W
b3	I2BE	Input Capture Enable	0: Does not include the MTIOC2B pin in the MTU1.TGRB input capture conditions 1: Includes the MTIOC2B pin in the MTU1.TGRB input capture conditions	R/W
b7 to b4	—	Reserved	These bits are read as 0. The write value should be 0.	R/W

The MTU has one TICCR register for MTU1.
The TICCR register specifies input capture conditions when counters MTU1.TCNT and MTU2.TCNT are cascaded.

22.2.9 Timer A/D Conversion Start Request Control Register (TADCR)

Address(es): MTU4.TADCR 000D 0A40h

	b15	b14	b13	b12	b11	b10	b9	b8	b7	b6	b5	b4	b3	b2	b1	b0
	BF[1:0]		—	—	—	—	—	—	UT4AE	DT4AE	UT4BE	DT4BE	ITA3AE	ITA4VE	ITB3AE	ITB4VE
Value after reset:	0	0	0	0	0	0	0	0	0	0	0	0	0	0	0	0

Bit	Symbol	Bit Name	Description	R/W
b0	ITB4VE	TCIV4 Interrupt Skipping Link Enable*1, *2, *3	0: TCIV4 interrupt skipping is not linked 1: TCIV4 interrupt skipping is linked	R/W
b1	ITB3AE	TGIA3 Interrupt Skipping Link Enable*1, *2, *3	0: TGIA3 interrupt skipping is not linked 1: TGIA3 interrupt skipping is linked	R/W
b2	ITA4VE	TCIV4 Interrupt Skipping Link Enable*1, *2, *3	0: TCIV4 interrupt skipping is not linked 1: TCIV4 interrupt skipping is linked	R/W
b3	ITA3AE	TGIA3 Interrupt Skipping Link Enable*1, *2, *3	0: TGIA3 interrupt skipping is not linked 1: TGIA3 interrupt skipping is linked	R/W
b4	DT4BE	Down-Count TRG4BN Enable*3	0: A/D conversion start requests (TRG4BN) disabled during MTU4.TCNT down-count operation 1: A/D conversion start requests (TRG4BN) enabled during MTU4.TCNT down-count operation	R/W
b5	UT4BE	Up-Count TRG4BN Enable	0: A/D conversion start requests (TRG4BN) disabled during MTU4.TCNT up-count operation 1: A/D conversion start requests (TRG4BN) enabled during MTU4.TCNT up-count operation	R/W
b6	DT4AE	Down-Count TRG4AN Enable*3	0: A/D conversion start requests (TRG4AN) disabled during MTU4.TCNT down-count operation 1: A/D conversion start requests (TRG4AN) enabled during MTU4.TCNT down-count operation	R/W
b7	UT4AE	Up-Count TRG4AN Enable	0: A/D conversion start requests (TRG4AN) disabled during MTU4.TCNT up-count operation 1: A/D conversion start requests (TRG4AN) enabled during MTU4.TCNT up-count operation	R/W
b13 to b8	—	Reserved	These bits are read as 0. The write value should be 0.	R/W
b15, b14	BF[1:0]	MTU4.TADCOBRA/TADCOBRB Transfer Timing Select	Refer to Table 22.29 for details.	R/W

Note: The TADCR register must not be accessed in 8-bit units; it should be accessed in 16-bit units.
Note 1. When interrupt skipping is disabled (the TITCR.T3AEN and T4VEN bits are set to 0 or the interrupt skipping count setting bits (T3ACOR[2:0] and T4VCOR[2:0]) in the TITCR register are set to 000b), do not link A/D conversion start requests with interrupt skipping operation (set the TADCR.ITA3AE, ITA4VE, ITB3AE, and ITB4VE bits to 0).
Note 2. If link with interrupt skipping is enabled while interrupt skipping is disabled, A/D conversion start requests will not be issued.
Note 3. Set b6 and b4 to b0 to 0 when complementary PWM mode is not selected.

The TADCR register enables or disables A/D conversion start requests and specifies whether to link A/D conversion start requests with interrupt skipping operation.

Table 22.29 Setting of Transfer Timing by TADCR.BF[1:0] Bits

Bit 15	Bit 14	Description			
BF[1]	**BF[0]**	**In Complementary PWM Mode**	**In Reset-Synchronized PWM Mode**	**In PWM Mode 1**	**In Normal Mode**
0	0	Data is not transferred from the cycle set buffer register (MTU4.TADCOBRA, MTU4.TADCOBRB) to the cycle set register (MTU4.TADCORA, MTU4.TADCORB).	Data is not transferred from the cycle set buffer register (MTU4.TADCOBRA, MTU4.TADCOBRB) to the cycle set register (MTU4.TADCORA, MTU4.TADCORB).	Data is not transferred from the cycle set buffer register (MTU4.TADCOBRA, MTU4.TADCOBRB) to the cycle set register (MTU4.TADCORA, MTU4.TADCORB).	Data is not transferred from the cycle set buffer register (MTU4.TADCOBRA, MTU4.TADCOBRB) to the cycle set register (MTU4.TADCORA, MTU4.TADCORB).
0	1	Data is transferred from the cycle set buffer register (MTU4.TADCOBRA, MTU4.TADCOBRB) to the cycle set register (MTU4.TADCORA, MTU4.TADCORB) at the crest of the MTU4.TCNT.	Data is transferred from the cycle set buffer register (MTU4.TADCOBRA, MTU4.TADCOBRB) to the cycle set register (MTU4.TADCORA, MTU4.TADCORB) when a compare match occurs between MTU3.TCNT and MTU3.TGRA.	Data is transferred from the cycle set buffer register (MTU4.TADCOBRA, MTU4.TADCOBRB) to the cycle set register (MTU4.TADCORA, MTU4.TADCORB) when a compare match occurs between MTU4.TCNT and MTU4.TGRA.	Data is transferred from the cycle set buffer register (MTU4.TADCOBRA, MTU4.TADCOBRB) to the cycle set register (MTU4.TADCORA, MTU4.TADCORB) when a compare match occurs between MTU4.TCNT and MTU4.TGRA.
1	0	Data is transferred from the cycle set buffer register (MTU4.TADCOBRA, MTU4.TADCOBRB) to the cycle set register (MTU4.TADCORA, MTU4.TADCORB) at the trough of the MTU4.TCNT.	Setting prohibited	Setting prohibited	Setting prohibited
1	1	Data is transferred from the cycle set buffer register (MTU4.TADCOBRA, MTU4.TADCOBRB) to the cycle set register (MTU4.TADCORA, MTU4.TADCORB) at the crest and trough of the MTU4.TCNT.	Setting prohibited	Setting prohibited	Setting prohibited

22.2.10 Timer A/D Conversion Start Request Cycle Set Register m (TADCORm) (m = A, B)

Address(es): MTU4.TADCORA 000D 0A44h, MTU4.TADCORB 000D 0A46h

	b15	b14	b13	b12	b11	b10	b9	b8	b7	b6	b5	b4	b3	b2	b1	b0
Value after reset:	1	1	1	1	1	1	1	1	1	1	1	1	1	1	1	1

Note: MTU4.TADCORA and MTU4.TADCORB must not be accessed in 8-bit units; they should be accessed in 16-bit units.

The TADCORA and TADCORB registers specify the A/D conversion start request cycle. When the MTU4.TCNT count reaches the value in TADCORA or TADCORB, a corresponding A/D conversion start request will be issued.

22.2.11 Timer A/D Conversion Start Request Cycle Set Buffer Register m (TADCOBRm) (m = A, B)

Address(es): MTU4.TADCOBRA 000D 0A48h, MTU4.TADCOBRB 000D 0A4Ah

	b15	b14	b13	b12	b11	b10	b9	b8	b7	b6	b5	b4	b3	b2	b1	b0
Value after reset:	1	1	1	1	1	1	1	1	1	1	1	1	1	1	1	1

Note: MTU4.TADCOBRA and MTU4.TADCOBRB must not be accessed in 8-bit units; they should be accessed in 16-bit units.

The TADCOBRA and TADCOBRB registers function as buffer registers for registers TADCORA and TADCORB, respectively. These registers specify the A/D conversion start request cycle. When the crest or trough of the MTU4.TCNT count is reached, these register values are transferred to registers TADCORA and TADCORB, respectively.

22.2.12 Timer Counter (TCNT)

Address(es): MTU0.TCNT 000D 0B06h, MTU1.TCNT 000D 0B86h, MTU2.TCNT 000D 0C06h, MTU3.TCNT 000D 0A10h, MTU4.TCNT 000D 0A12h, MTU5.TCNTU 000D 0C80h, MTU5.TCNTV 000D 0C90h, MTU5.TCNTW 000D 0CA0h

	b15	b14	b13	b12	b11	b10	b9	b8	b7	b6	b5	b4	b3	b2	b1	b0
Value after reset:	0	0	0	0	0	0	0	0	0	0	0	0	0	0	0	0

Note: The TCNT counters must not be accessed in 8-bit units; they should be accessed in 16-bit units.

The MTU has a total of eight TCNT counters, one each for MTU0 to MTU4 and three (MTU5.TCNTU, TCNTV, and TCNTW) for MTU5. TCNT is a readable/writable counter.

22.2.13 Timer General Register m (TGRm) (m = A, B, C, D, E, F, U, V, W)

Address(es): MTU0.TGRA 000D 0B08h, MTU0.TGRB 000D 0B0Ah, MTU0.TGRC 000D 0B0Ch, MTU0.TGRD 000D 0B0Eh, MTU0.TGRE 000D 0B20h, MTU0.TGRF 000D 0B22h, MTU1.TGRA 000D 0B88h, MTU1.TGRB 000D 0B8Ah, MTU2.TGRA 000D 0C08h, MTU2.TGRB 000D 0C0Ah, MTU3.TGRA 000D 0A18h, MTU3.TGRB 000D 0A1Ah, MTU3.TGRC 000D 0A24h, MTU3.TGRD 000D 0A26h, MTU4.TGRA 000D 0A1Ch, MTU4.TGRB 000D 0A1Eh, MTU4.TGRC 000D 0A28h, MTU4.TGRD 000D 0A2Ah, MTU5.TGRU 000D 0C82h, MTU5.TGRV 000D 0C92h, MTU5.TGRW 000D 0CA2h

	b15	b14	b13	b12	b11	b10	b9	b8	b7	b6	b5	b4	b3	b2	b1	b0
Value after reset:	1	1	1	1	1	1	1	1	1	1	1	1	1	1	1	1

Note: The TGR registers must not be accessed in 8-bit units; they should be accessed in 16-bit units.

The MTU has a total of 21 TGR registers, six for MTU0, two each for MTU1 and MTU2, four each for MTU3 and MTU4, and three for MTU5.

Registers TGRA, TGRB, TGRC, and TGRD function as either output compare or input capture registers. Registers TGRC and TGRD for MTU0, MTU3, and MTU4 can also be designated for operation as buffer registers. TGR buffer register combinations are TGRA and TGRC, and TGRB and TGRD.

Registers MTU0.TGRE and MTU0.TGRF function as compare registers. When the MTU0.TCNT count matches the MTU0.TGRE register value, an A/D conversion start request can be issued. The TGRF register can also be designated for operation as a buffer register. TGR buffer register combination is TGRE and TGRF.

Registers MTU5.TGRU, MTU5.TGRV, and MTU5.TGRW function as compare match, input capture, or external pulse width measurement registers.

22.2.14 Timer Start Registers (TSTR)

- MTU.TSTR (MTU0 to MTU4)

Address(es): MTU.TSTR 000D 0A80h

	b7	b6	b5	b4	b3	b2	b1	b0
	CST4	CST3	—	—	—	CST2	CST1	CST0
Value after reset:	0	0	0	0	0	0	0	0

Bit	Symbol	Bit Name	Description	R/W
b0	CST0	Counter Start 0	0: MTU0.TCNT performs count stop 1: MTU0.TCNT performs count operation	R/W
b1	CST1	Counter Start 1	0: MTU1.TCNT performs count stop 1: MTU1.TCNT performs count operation	R/W
b2	CST2	Counter Start 2	0: MTU2.TCNT performs count stop 1: MTU2.TCNT performs count operation	R/W
b5 to b3	—	Reserved	These bits are read as 0. The write value should be 0.	R/W
b6	CST3	Counter Start 3	0: MTU3.TCNT performs count stop 1: MTU3.TCNT performs count operation	R/W
b7	CST4	Counter Start 4	0: MTU4.TCNT performs count stop 1: MTU4.TCNT performs count operation	R/W

The TSTR registers start or stop the TCNT operation in MTU0 to MTU4.
Before setting the operating mode in the TMDR register or setting the TCNT count clock in the TCR register, be sure to stop the TCNT counter.

CSTn Bits (Counter Start n) (n = 0 to 4)

Each bit starts or stops the TCNT counter in the corresponding channel.
If 0 is written to the CSTn bit during operation with the MTIOC pin designated for output, the counter stops but the output compare signal level from the MTIOC pin is retained. If the TIOR register is written to while the CSTn bit is 0, the pin output level will be changed to the specified initial output value.

- MTU5.TSTR (MTU5)

Address(es): MTU5.TSTR 000D 0CB4h

	b7	b6	b5	b4	b3	b2	b1	b0
	—	—	—	—	—	CSTU5	CSTV5	CSTW5
Value after reset:	0	0	0	0	0	0	0	0

Bit	Symbol	Bit Name	Description	R/W
b0	CSTW5	Counter Start W5	0: MTU5.TCNTW count operation is stopped 1: MTU5.TCNTW performs count operation	R/W
b1	CSTV5	Counter Start V5	0: MTU5.TCNTV count operation is stopped 1: MTU5.TCNTV performs count operation	R/W
b2	CSTU5	Counter Start U5	0: MTU5.TCNTU count operation is stopped 1: MTU5.TCNTU performs count operation	R/W
b7 to b3	—	Reserved	These bits are read as 0. The write value should be 0.	R/W

22.2.15 Timer Synchronous Register (TSYR)

Address(es): MTU.TSYR 000D 0A81h

	b7	b6	b5	b4	b3	b2	b1	b0
	SYNC4	SYNC3	—	—	—	SYNC2	SYNC1	SYNC0
Value after reset:	0	0	0	0	0	0	0	0

Bit	Symbol	Bit Name	Description	R/W
b0	SYNC0	Timer Synchronous Operation 0	0: MTU0.TCNT operates independently (TCNT setting/clearing is not related to other channels) 1: MTU0.TCNT performs synchronous operation. TCNT synchronous setting/synchronous clearing is enabled	R/W
b1	SYNC1	Timer Synchronous Operation 1	0: MTU1.TCNT operates independently (TCNT setting/clearing is not related to other channels) 1: MTU1.TCNT performs synchronous operation. TCNT synchronous setting/synchronous clearing is enabled	R/W
b2	SYNC2	Timer Synchronous Operation 2	0: MTU2.TCNT operates independently (TCNT setting/clearing is not related to other channels) 1: MTU2.TCNT performs synchronous operation. TCNT synchronous setting/synchronous clearing is enabled	R/W
b5 to b3	—	Reserved	These bits are read as 0. The write value should be 0.	R/W
b6	SYNC3	Timer Synchronous Operation 3	0: MTU3.TCNT operates independently (TCNT setting/clearing is not related to other channels). 1: MTU3.TCNT performs synchronous operation. TCNT synchronous setting/synchronous clearing is enabled.	R/W
b7	SYNC4	Timer Synchronous Operation 4	0: MTU4.TCNT operates independently (TCNT setting/clearing is not related to other channels). 1: MTU4.TCNT performs synchronous operation. TCNT synchronous setting/synchronous clearing is enabled.	R/W

The TSYR register selects independent operation or synchronous operation of the TCNT counter in MTU0 to MTU4. A channel performs synchronous operation when the corresponding bit in the TSYR register is set to 1.

SYNCn Bits (Timer Synchronous n Operation) (n = 0 to 4)

Each bit selects whether operation is independent of or synchronized with other channels.

When synchronous operation is selected, the TCNT synchronous setting of multiple channels and synchronous clearing by counter clearing on another channel are possible.

To set synchronous operation, the SYNCn bits for at least two channels must be set to 1. To set synchronous clearing, in addition to the SYNCn bit, the TCNT clearing source must also be set the TCR.CCLR[2:0] bits.

22.2.16 Timer Read/Write Enable Register (TRWER)

Address(es): MTU.TRWER 000D 0A84h

	b7	b6	b5	b4	b3	b2	b1	b0
	—	—	—	—	—	—	—	RWE
Value after reset:	0	0	0	0	0	0	0	1

Bit	Symbol	Bit Name	Description	R/W
b0	RWE	Read/Write Enable	0: Read/write access to the registers is disabled 1: Read/write access to the registers is enabled	R/W
b7 to b1	—	Reserved	These bits are read as 0. The write value should be 0.	R/W

The TRWER register enables or disables access to the registers and counters that have write-protection capability against accidental modification in MTU3 and MTU4.

RWE Bit (Read/Write Enable)

This bit enables or disables access to the registers that have write-protection capability against accidental modification.
[Clearing condition]

- When 0 is written to the RWE bit after reading the RWE bit = 1

- Registers and Counters having Write-Protection Capability against Accidental Modification

22 registers: MTUn.TCR, MTUn.TMDR, MTUn.TIORH, MTUn.TIORL, MTUn.TIER, MTUn.TGRA, MTUn.TGRB, MTU.TOER, MTU.TOCR1, MTU.TOCR2, MTU.TGCR, MTU.TCDR, MTU.TDDR, and MTUn.TCNT (n = 3, 4)

22.2.17 Timer Output Master Enable Register (TOER)

Address(es): MTU.TOER 000D 0A0Ah

	b7	b6	b5	b4	b3	b2	b1	b0
	—	—	OE4D	OE4C	OE3D	OE4B	OE4A	OE3B
Value after reset:	1	1	0	0	0	0	0	0

Bit	Symbol	Bit Name	Description	R/W
b0	OE3B	Master Enable MTIOC3B	0: MTU output is disabled*1 1: MTU output is enabled	R/W
b1	OE4A	Master Enable MTIOC4A	0: MTU output is disabled*1 1: MTU output is enabled	R/W
b2	OE4B	Master Enable MTIOC4B	0: MTU output is disabled*1 1: MTU output is enabled	R/W
b3	OE3D	Master Enable MTIOC3D	0: MTU output is disabled*1 1: MTU output is enabled	R/W
b4	OE4C	Master Enable MTIOC4C	0: MTU output is disabled*1 1: MTU output is enabled	R/W
b5	OE4D	Master Enable MTIOC4D	0: MTU output is disabled*1 1: MTU output is enabled	R/W
b7, b6	—	Reserved	These bits are read as 1. The write value should be 1.	R/W

Note 1. To output a non-active level from each pin when MTU output is disabled, make necessary settings for non-active level output from general I/O ports in the data direction registers (PDR), port output data registers (PODR), and port mode register (PMR) in advance. For details, refer to the I/O Ports section.

The TOER register enables or disables output settings for output pins MTIOC4D, MTIOC4C, MTIOC3D, MTIOC4B, MTIOC4A, and MTIOC3B.

These pins do not output correctly if the bits in the TOER register have not been set. In MTU3 and MTU4, set the TOER register prior to setting the TIOR register.

Set the TOER register after setting the TSTR.CST3 and CST4 bits to 0 (refer to Figure 22.35 and Figure 22.38).

22.2.18 Timer Output Control Register 1 (TOCR1)

Address(es): MTU.TOCR1 000D 0A0Eh

	b7	b6	b5	b4	b3	b2	b1	b0
	—	PSYE	—	—	TOCL	TOCS	OLSN	OLSP
Value after reset:	0	0	0	0	0	0	0	0

Bit	Symbol	Bit Name	Description	R/W
b0	OLSP	Output Level Select P*2,*3	Refer to Table 22.30.	R/W
b1	OLSN	Output Level Select N*2,*3	Refer to Table 22.31.	R/W
b2	TOCS	TOC Select	0: TOCR1 setting is selected 1: TOCR2 setting is selected	R/W
b3	TOCL	TOC Register Write Protection*1	0: Write access to the TOCS, OLSN, and OLSP bits is enabled 1: Write access to the TOCS, OLSN, and OLSP bits is disabled	R/W*4
b5, b4	—	Reserved	These bits are read as 0. The write value should be 0.	R/W
b6	PSYE	PWM Synchronous Output Enable	0: Toggle output is disabled 1: Toggle output is enabled	R/W
b7	—	Reserved	This bit is read as 0. The write value should be 0.	R/W

Note 1. Setting the TOCR1.TOCL bit to 1 prevents accidental modification when the CPU goes out of control.
Note 2. Setting the TOCR1.TOCS bit to 0 makes this bit setting valid.
Note 3. If dead-time is not generated, the negative-phase output is always the exact inverse of the positive-phase output. In this case, only the OLSP bit is valid.
Note 4. This bit can be set to 1 only once after a power-on reset. After 1 is written, 0 cannot be written to the bit.

The TOCR1 register enables or disables PWM-synchronized toggle output in complementary PWM mode and reset-synchronized PWM mode, and controls inversion of PWM output level.

OLSP Bit (Output Level Select P)

This bit selects the positive-phase output level in reset-synchronized PWM mode and complementary PWM mode.

OLSN Bit (Output Level Select N)

This bit selects the negative-phase output level in reset-synchronized PWM mode and complementary PWM mode.

TOCS Bit (TOC Select)

This bit selects either the TOCR1 or TOCR2 register setting to be used for the output level in complementary PWM mode and reset-synchronized PWM mode.

TOCL Bit (TOC Register Write Protection)

This bit enables or disables write access to the TOCS, OLSN, and OLSP bits in the TOCR1 register.

PSYE Bit (PWM Synchronous Output Enable)

This bit enables or disables toggle output synchronized with the PWM cycle from the MTIOC3A pin.

Table 22.30 Output Level Select Function

Bit 0	Function			
			Compare Match Output	
OLSP	Initial Output	Active Level	Up-Counting	Down-Counting
0	High	Low	Low	High
1	Low	High	High	Low

Table 22.31 Output Level Select Function

Bit 1	Function			
			Compare Match Output	
OLSN	Initial Output	Active Level	Up-Counting	Down-Counting
0	High	Low	High	Low
1	Low	High	Low	High

Note: The initial output value of negative-phase waveform changes to an active level after the dead time has passed since counting starts.

Figure 22.2 shows an example of output in complementary PWM mode (one phase) when OLSN = 1 and OLSP = 1.

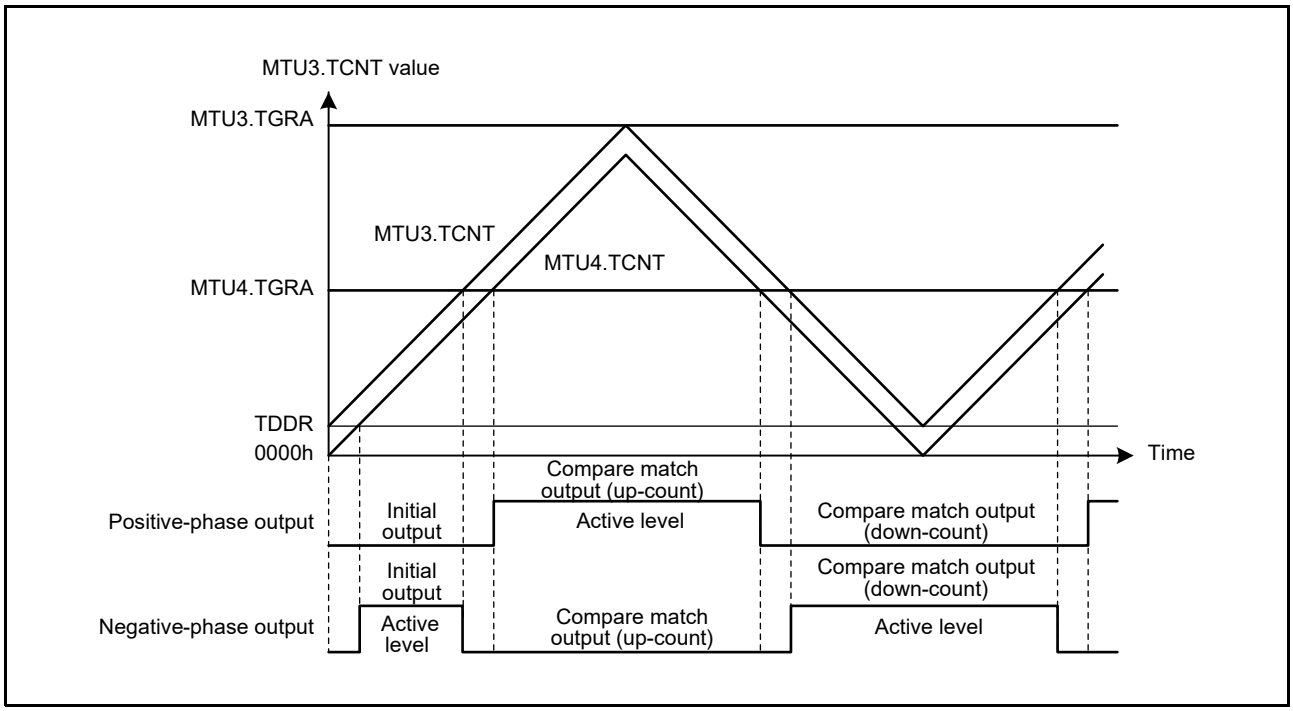

Figure 22.2 Example of Output in Complementary PWM Mode

22.2.19 Timer Output Control Register 2 (TOCR2)

Address(es): MTU.TOCR2 000D 0A0Fh

	b7	b6	b5	b4	b3	b2	b1	b0
	BF[1:0]		OLS3N	OLS3P	OLS2N	OLS2P	OLS1N	OLS1P
Value after reset:	0	0	0	0	0	0	0	0

Bit	Symbol	Bit Name	Description	R/W
b0	OLS1P	Output Level Select 1P*1, *2	This bit selects the output level on MTIOC3B in reset-synchronized PWM mode and complementary PWM mode. Refer to Table 22.32.	R/W
b1	OLS1N	Output Level Select 1N*1, *2	This bit selects the output level on MTIOC3D in reset-synchronized PWM mode and complementary PWM mode. Refer to Table 22.33.	R/W
b2	OLS2P	Output Level Select 2P*1, *2	This bit selects the output level on MTIOC4A in reset-synchronized PWM mode and complementary PWM mode. Refer to Table 22.34.	R/W
b3	OLS2N	Output Level Select 2N*1, *2	This bit selects the output level on MTIOC4C in reset-synchronized PWM mode and complementary PWM mode. Refer to Table 22.35.	R/W
b4	OLS3P	Output Level Select 3P*1, *2	This bit selects the output level on MTIOC4B in reset-synchronized PWM mode and complementary PWM mode. Refer to Table 22.36.	R/W
b5	OLS3N	Output Level Select 3N*1, *2	This bit selects the output level on MTIOC4D in reset-synchronized PWM mode and complementary PWM mode. Refer to Table 22.37.	R/W
b7, b6	BF[1:0]	TOLBR Buffer Transfer Timing Select	These bits select the timing for transferring data from TOLBR to TOCR2. Refer to Table 22.38 for details.	R/W

Note 1. Setting the TOCR1.TOCS bit to 1 makes this bit setting valid.
Note 2. If dead-time is not generated, the negative-phase output is always the exact inverse of the positive-phase output. In these cases, only the OLSiP bits are valid (i = 1 to 3).

The TOCR2 register controls inversion of PWM output level in complementary PWM mode and reset-synchronized PWM mode.

Table 22.32 MTIOC3B Output Level Select Function

Bit 0	Function			
			Compare Match Output	
OLS1P	Initial Output	Active Level	Up-Counting	Down-Counting
0	High	Low	Low	High
1	Low	High	High	Low

Table 22.33 MTIOC3D Output Level Select Function

Bit 1	Function			
			Compare Match Output	
OLS1N	Initial Output	Active Level	Up-Counting	Down-Counting
0	High	Low	High	Low
1	Low	High	Low	High

Note: The initial output value of negative-phase waveform changes to an active level after the dead time has passed since counting starts.

Table 22.34 MTIOC4A Output Level Select Function

Bit 2	Function			
			Compare Match Output	
OLS2P	Initial Output	Active Level	Up-Counting	Down-Counting
0	High	Low	Low	High
1	Low	High	High	Low

Table 22.35 MTIOC4C Output Level Select Function

Bit 3	Function			
			Compare Match Output	
OLS2N	Initial Output	Active Level	Up-Counting	Down-Counting
0	High	Low	High	Low
1	Low	High	Low	High

Note: The initial output value of negative-phase waveform changes to an active level after the dead time has passed since counting starts.

Table 22.36 MTIOC4B Output Level Select Function

Bit 4	Function			
			Compare Match Output	
OLS3P	Initial Output	Active Level	Up-Counting	Down-Counting
0	High	Low	Low	High
1	Low	High	High	Low

Table 22.37 MTIOC4D Output Level Select Function

Bit 5	Function			
			Compare Match Output	
OLS3N	Initial Output	Active Level	Up-Counting	Down-Counting
0	High	Low	High	Low
1	Low	High	Low	High

Note: The initial output value of negative-phase waveform changes to an active level after the dead time has passed since counting starts.

Table 22.38 Setting of TOCR2.BF[1:0] Bits

Bit 7	Bit 6	Description	
BF[1]	BF[0]	Complementary PWM Mode	Reset-Synchronized PWM Mode
0	0	Does not transfer data from TOLBR to TOCR2.	Does not transfer data from TOLBR to TOCR2.
0	1	Transfers data from TOLBR to TOCR2 at the crest of the MTU4.TCNT count.	Transfers data from TOLBR to TOCR2 when MTU4.TCNT or MTU3.TCNT is cleared.
1	0	Transfers data from TOLBR to TOCR2 at the trough of the MTU4.TCNT count.	Setting prohibited
1	1	Transfers data from TOLBR to TOCR2 at the crest and trough of the MTU4.TCNT count.	Setting prohibited

22.2.20 Timer Output Level Buffer Register (TOLBR)

Address(es): MTU.TOLBR 000D 0A36h

	b7	b6	b5	b4	b3	b2	b1	b0
	—	—	OLS3N	OLS3P	OLS2N	OLS2P	OLS1N	OLS1P
Value after reset:	0	0	0	0	0	0	0	0

Bit	Symbol	Bit Name	Description	R/W
b0	OLS1P	Output Level Select 1P	Specify the buffer value to be transferred to the OLS1P bit in TOCR2.	R/W
b1	OLS1N	Output Level Select 1N	Specify the buffer value to be transferred to the OLS1N bit in TOCR2.	R/W
b2	OLS2P	Output Level Select 2P	Specify the buffer value to be transferred to the OLS2P bit in TOCR2.	R/W
b3	OLS2N	Output Level Select 2N	Specify the buffer value to be transferred to the OLS2N bit in TOCR2.	R/W
b4	OLS3P	Output Level Select 3P	Specify the buffer value to be transferred to the OLS3P bit in TOCR2.	R/W
b5	OLS3N	Output Level Select 3N	Specify the buffer value to be transferred to the OLS3N bit in TOCR2.	R/W
b7, b6	—	Reserved	These bits are read as 0. The write value should be 0.	R/W

The TOLBR register functions as a buffer register for the TOCR2 register and specifies the PWM output level in complementary PWM mode and reset-synchronized PWM mode.

Figure 22.3 shows an example of the PWM output level setting procedure in buffer operation.

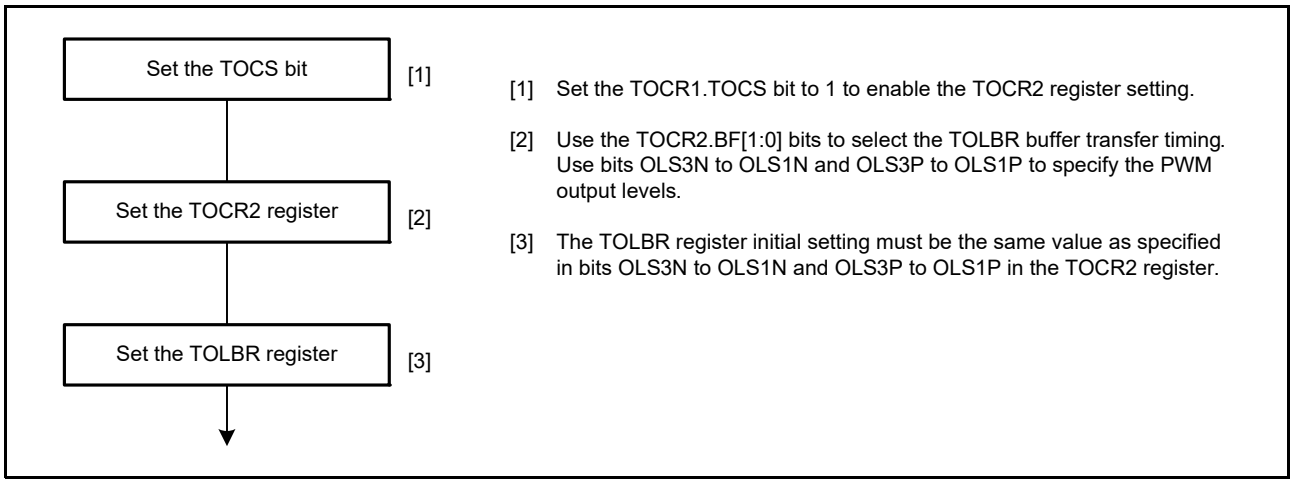

Figure 22.3 Example of PWM Output Level Setting Procedure in Buffer Operation

22.2.21 Timer Gate Control Register (TGCR)

Address(es): MTU.TGCR 000D 0A0Dh

	b7	b6	b5	b4	b3	b2	b1	b0
	—	BDC	N	P	FB	WF	VF	UF
Value after reset:	1	0	0	0	0	0	0	0

Bit	Symbol	Bit Name	Description	R/W
b0	UF	Output Phase Switch	These bits turn on or off the positive-phase/negative-phase output. The setting of these bits is valid only when the TGCR.FB bit is set to 1. In this case, the setting of b0 to b2 is used instead of the external input. Refer to Table 22.39.	R/W
b1	VF			R/W
b2	WF			R/W
b3	FB	External Feedback Signal Enable	0: Output is switched by external input (input sources are TGRA, TGRB, and TGRC input capture signals in MTU0) 1: Output is switched by software (TGCR's UF, VF, and WF settings)	R/W
b4	P	Positive-Phase Output (P) Control	0: Level output 1: Reset-synchronized PWM or complementary PWM output	R/W
b5	N	Negative-Phase Output (N) Control	0: Level output 1: Reset-synchronized PWM or complementary PWM output	R/W
b6	BDC	Brushless DC Motor	0: Ordinary output 1: Functions of this register are made effective	R/W
b7	—	Reserved	This bit is read as 1. The write value should be 1.	R/W

The TGCR register controls the output waveform necessary for brushless DC motor control in reset-synchronized PWM mode and complementary PWM mode. These register settings are ineffective for anything other than complementary PWM mode and reset-synchronized PWM mode.

UF, VF, and WF Bits (Output Phase Switch)

The setting of these bits is valid only when the TGCR.FB bit is set to 1. In this case, the setting of b0 to b2 is used instead of the external input. Refer to Table 22.39.

FB Bit (External Feedback Signal Enable)

This bit selects whether the positive-/negative-phase output is switched automatically with the TGRA, TGRB, and TGRC input capture signals in MTU0 or by writing 0 or 1 to bits 2 to 0 in TGCR.

P Bit (Positive-Phase Output (P) Control)

This bit selects the level output or the reset-synchronized PWM/complementary PWM output for the positive-phase output pins (MTIOC3B, MTIOC4A, and MTIOC4B pins).

N Bit (Negative-Phase Output (N) Control)

This bit selects the level output or the reset-synchronized PWM/complementary PWM output for the negative-phase output pins (MTIOC3D, MTIOC4C, and MTIOC4D pins).

BDC Bit (Brushless DC Motor)

This bit selects whether to make the functions of the TGCR register effective or ineffective.

Table 22.39 Output Level Select Function

Bit 2	Bit 1	Bit 0	Function					
			MTIOC3B	MTIOC4A	MTIOC4B	MTIOC3D	MTIOC4C	MTIOC4D
WF	VF	UF	U Phase	V Phase	W Phase	U Phase	V Phase	W Phase
0	0	0	OFF	OFF	OFF	OFF	OFF	OFF
0	0	1	ON	OFF	OFF	OFF	OFF	ON
0	1	0	OFF	ON	OFF	ON	OFF	OFF
0	1	1	OFF	ON	OFF	OFF	OFF	ON
1	0	0	OFF	OFF	ON	OFF	ON	OFF
1	0	1	ON	OFF	OFF	OFF	ON	OFF
1	1	0	OFF	OFF	ON	ON	OFF	OFF
1	1	1	OFF	OFF	OFF	OFF	OFF	OFF

22.2.22 Timer Subcounter (TCNTS)

Address(es): MTU.TCNTS 000D 0A20h

	b15	b14	b13	b12	b11	b10	b9	b8	b7	b6	b5	b4	b3	b2	b1	b0
Value after reset:	0	0	0	0	0	0	0	0	0	0	0	0	0	0	0	0

Note: The TCNTS counter must not be accessed in 8-bit units; it should be accessed in 16-bit units.

The TCNTS counter is a read-only counter that is used only in complementary PWM mode.

22.2.23 Timer Dead Time Data Register (TDDR)

Address(es): MTU.TDDR 000D 0A16h

	b15	b14	b13	b12	b11	b10	b9	b8	b7	b6	b5	b4	b3	b2	b1	b0
Value after reset:	1	1	1	1	1	1	1	1	1	1	1	1	1	1	1	1

Note: The TDDR register must not be accessed in 8-bit units; it should be accessed in 16-bit units.

The TDDR register specifies the MTU3.TCNT and MTU4.TCNT counter offset value in complementary PWM mode. In complementary PWM mode, when the MTU3.TCNT and MTU4.TCNT counters are cleared and then restarted, the TDDR register value is loaded into the MTU3.TCNT counter and the count operation starts.

22.2.24 Timer Cycle Data Register (TCDR)

Address(es): MTU.TCDR 000D 0A14h

	b15	b14	b13	b12	b11	b10	b9	b8	b7	b6	b5	b4	b3	b2	b1	b0
Value after reset:	1	1	1	1	1	1	1	1	1	1	1	1	1	1	1	1

Note: The TCDR register must not be accessed in 8-bit units; it should be accessed in 16-bit units.

The TCDR register specifies the count value to switch the count direction of the TCNTS counter. This register is used only in complementary PWM mode. Set half the PWM cycle as the TCDR register value. The TCDR register is constantly compared with the TCNTS counter in complementary PWM mode, and when a match occurs, the TCNTS counter switches direction (down-count to up-count).

22.2.25 Timer Cycle Buffer Register (TCBR)

Address(es): MTU.TCBR 000D 0A22h

	b15	b14	b13	b12	b11	b10	b9	b8	b7	b6	b5	b4	b3	b2	b1	b0
Value after reset:	1	1	1	1	1	1	1	1	1	1	1	1	1	1	1	1

Note: The TCBR register must not be accessed in 8-bit units; it should be accessed in 16-bit units.

The TCBR register functions as a buffer register for the TCDR register, and specifies the count value to switch the count direction of the TCNTS counter. This register is used only in complementary PWM mode. The TCBR register value is transferred to the TCDR register with the transfer timing set in the TMDR register.

22.2.26 Timer Interrupt Skipping Set Register (TITCR)

Address(es): MTU.TITCR 000D 0A30h

	b7	b6	b5	b4	b3	b2	b1	b0
	T3AEN	T3ACOR[2:0]			T4VEN	T4VCOR[2:0]		
Value after reset:	0	0	0	0	0	0	0	0

Bit	Symbol	Bit Name	Description	R/W
b2 to b0	T4VCOR[2:0]	TCIV4 Interrupt Skipping Count Setting	These bits specify the TCIV4 interrupt skipping count within the range from 0 to 7.*1 For details, refer to Table 22.40.	R/W
b3	T4VEN	T4VEN	0: TCIV4 interrupt skipping disabled 1: TCIV4 interrupt skipping enabled	R/W
b6 to b4	T3ACOR[2:0]	TGIA3 Interrupt Skipping Count Setting	These bits specify the TGIA3 interrupt skipping count within the range from 0 to 7.*1 For details, refer to Table 22.41.	R/W
b7	T3AEN	T3AEN	0: TGIA3 interrupt skipping disabled 1: TGIA3 interrupt skipping enabled	R/W

Note 1. When 0 is specified for the interrupt skipping count, no interrupt skipping will be performed.
Before changing the interrupt skipping count, be sure to set the TITCR.T3AEN and TITCR.T4VEN bits to 0 to clear the TITCNT counter.

Table 22.40 Setting of Interrupt Skipping Count by T4VCOR[2:0] Bits

Bit 2	Bit 1	Bit 0	
T4VCOR[2]	**T4VCOR[1]**	**T4VCOR[0]**	**Description**
0	0	0	Does not perform TCIV4 interrupt skipping.
0	0	1	Sets the TCIV4 interrupt skipping count to 1.
0	1	0	Sets the TCIV4 interrupt skipping count to 2.
0	1	1	Sets the TCIV4 interrupt skipping count to 3.
1	0	0	Sets the TCIV4 interrupt skipping count to 4.
1	0	1	Sets the TCIV4 interrupt skipping count to 5.
1	1	0	Sets the TCIV4 interrupt skipping count to 6.
1	1	1	Sets the TCIV4 interrupt skipping count to 7.

Table 22.41 Setting of Interrupt Skipping Count by T3ACOR[2:0] Bits

Bit 6	Bit 5	Bit 4	
T3ACOR[2]	**T3ACOR[1]**	**T3ACOR[0]**	**Description**
0	0	0	Does not perform TGIA3 interrupt skipping.
0	0	1	Sets the TGIA3 interrupt skipping count to 1.
0	1	0	Sets the TGIA3 interrupt skipping count to 2.
0	1	1	Sets the TGIA3 interrupt skipping count to 3.
1	0	0	Sets the TGIA3 interrupt skipping count to 4.
1	0	1	Sets the TGIA3 interrupt skipping count to 5.
1	1	0	Sets the TGIA3 interrupt skipping count to 6.
1	1	1	Sets the TGIA3 interrupt skipping count to 7.

22.2.27 Timer Interrupt Skipping Counter (TITCNT)

Address(es): MTU.TITCNT 000D 0A31h

	b7	b6	b5	b4	b3	b2	b1	b0
	—	T3ACNT[2:0]			—	T4VCNT[2:0]		
Value after reset:	0	0	0	0	0	0	0	0

Bit	Symbol	Bit Name	Description	R/W
b2 to b0	T4VCNT[2:0]	TCIV4 Interrupt Counter	While the T4VEN bit in TITCR is set to 1, the count in these bits is incremented every time a TCIV4 interrupt source occurs.	R
b3	—	Reserved	This bit is read as 0.	R
b6 to b4	T3ACNT[2:0]	TGIA3 Interrupt Counter	While the T3AEN bit in TITCR is set to 1, the count in these bits is incremented every time a TGIA3 interrupt source occurs.	R
b7	—	Reserved	This bit is read as 0.	R

Note: To clear the TITCNT counter, set the T3AEN and T4VEN bits in the TITCR register to 0.

The TITCNT counter counts the number of interrupt source occurrences for interrupt skipping. The TITCNT counter retains the values even after stopping the count operation of counters MTU4.TCNT and MTU3.TCNT.

T4VCNT[2:0] Bits (TCIV4 Interrupt Counter)

[Clearing conditions]

- When the TITCNT.T4VCNT[2:0] bits match the TITCR.T4VCOR[2:0] bits
- When the TITCR.T4VEN bit is set to 0
- When the TITCR.T4VCOR[2:0] bits are set to 000b

T3ACNT[2:0] Bits (TGIA3 Interrupt Counter)

[Clearing conditions]

- When the TITCNT.T3ACNT[2:0] bits match the TITCR.T3ACOR[2:0] bits
- When the TITCR.T3AEN bit is set to 0
- When the TITCR.T3ACOR[2:0] bits are set to 000b

22.2.28 Timer Buffer Transfer Set Register (TBTER)

Address(es): MTU.TBTER 000D 0A32h

	b7	b6	b5	b4	b3	b2	b1	b0
	—	—	—	—	—	—	BTE[1:0]	
Value after reset:	0	0	0	0	0	0	0	0

Bit	Symbol	Bit Name	Description	R/W
b1, b0	BTE[1:0]	Buffer Transfer Disable and Interrupt Skipping Link Setting	These bits enable or disable transfer from the buffer registers used in complementary PWM mode to the temporary registers and specify whether to link the transfer with interrupt skipping operation. Refer to Table 22.42 for details.	R/W
b7 to b2	—	Reserved	These bits are read as 0. The write value should be 0.	R/W

The TBTER register enables or disables transfer from the buffer registers used in complementary PWM mode to the temporary registers and specifies whether to link the transfer with interrupt skipping operation.

Table 22.42 Setting of TBTER.BTE[1:0] Bits

Bit 1	Bit 0	
BTE[1]	**BTE[0]**	**Description**
0	0	Enables transfer from the buffer registers to the temporary registers*1 and does not link the transfer with interrupt skipping operation.
0	1	Disables transfer from the buffer registers to the temporary registers.
1	0	Links transfer from the buffer registers to the temporary registers with interrupt skipping operation.*2
1	1	Setting prohibited

Note: Target buffer registers: MTU3.TGRC, MTU3.TGRD, MTU4.TGRC, MTU4.TGRD, and MTU.TCBR

Note 1. Data is transferred in accordance with the TMDR.MD[3:0] bit setting. For details, refer to section 22.3.8, Complementary PWM Mode.

Note 2. When interrupt skipping is disabled (the TITCR.T3AEN and T4VEN bits or the interrupt skipping count setting bits (T3ACOR[2:0] and T4VCOR[2:0]) in the TITCR register are set to 000b), be sure to disable link of buffer transfer with interrupt skipping (set the TBTER.BTE[1] bit to 0).
If link with interrupt skipping is enabled while interrupt skipping is disabled, buffer transfer will not be performed.

22.2.29 Timer Dead Time Enable Register (TDER)

Address(es): MTU.TDER 000D 0A34h

	b7	b6	b5	b4	b3	b2	b1	b0
	—	—	—	—	—	—	—	TDER
Value after reset:	0	0	0	0	0	0	0	1

Bit	Symbol	Bit Name	Description	R/W
b0	TDER	Dead Time Enable	0: No dead time is generated 1: Dead time is generated*1	R/(W)
b7 to b1	—	Reserved	These bits are read as 0. The write value should be 0.	R/W

Note 1. TDDR must be set to 1 or a larger value.

The TDER register specifies dead time generation in complementary PWM mode. The MTU3 has one TDER register. The TDER register should be modified only while the TCNT counter stops.

TDER Bit (Dead Time Enable)

This bit specifies whether to generate dead time.

[Clearing condition]

- When 0 is written to the TDER bit after reading the TDER bit = 1

22.2.30 Timer Waveform Control Register (TWCR)

Address(es): MTU.TWCR 000D 0A60h

	b7	b6	b5	b4	b3	b2	b1	b0
	CCE	—	—	—	—	—	—	WRE
Value after reset:	0	0	0	0	0	0	0	0

Bit	Symbol	Bit Name	Description	R/W
b0	WRE	Initial Output Inhibition Enable	0: Initial value specified in TOCR is output 1: Initial output is inhibited	R/(W) *1
b6 to b1	—	Reserved	These bits are read as 0. The write value should be 0.	R/W
b7	CCE	Compare Match Clear Enable	0: Counters are not cleared at MTU3.TGRA compare match 1: Counters are cleared at MTU3.TGRA compare match	R/(W) *2

Note 1. Do not set this bit to 1 unless complementary PWM mode is selected.
Note 2. Do not set this bit to 1 unless complementary PWM mode 1 is selected.

The TWCR register controls the output waveform when synchronous counter clearing occurs in counters MTU3.TCNT and MTU4.TCNT in complementary PWM mode and specifies whether to clear the counters at the MTU3.TGRA compare match.
The TWCR.CCE bit and TWCR.WRE bit should be modified only while the TCNT counter stops.

WRE Bit (Initial Output Inhibition Enable)

This bit selects the waveform output when synchronous counter clearing occurs in complementary PWM mode.
The initial output is prohibited only when synchronous clearing occurs within the Tb interval at the trough in complementary PWM mode. When synchronous clearing occurs outside this interval, the initial value specified in the TOCR register is output regardless of the WRE bit setting. The initial value specified in the TOCR register is also output when synchronous clearing occurs in the Tb interval at the trough immediately after counters MTU3.TCNT and MTU4.TCNT start operation.
For the Tb interval at the trough in complementary PWM mode, refer to Figure 22.40.
[Setting condition]

- When 1 is written to the WRE bit after reading the WRE bit = 0

CCE Bit (Compare Match Clear Enable)

This bit specifies whether to clear counters at the MTU3.TGRA compare match in complementary PWM mode 1.
[Setting condition]

- When 1 is written to the CCE bit after reading the CCE bit = 0

22.2.31 Noise Filter Control Registers (NFCR)

- MTU0.NFCR, MTU1.NFCR, MTU2.NFCR, MTU3.NFCR, MTU4.NFCR

Address(es): MTU0.NFCR 000D 0A90h, MTU1.NFCR 000D 0A91h, MTU2.NFCR 000D 0A92h, MTU3.NFCR 000D 0A93h, MTU4.NFCR 000D 0A94h

	b7	b6	b5	b4	b3	b2	b1	b0
	—	—	NFCS[1:0]		NFDEN	NFCEN	NFBEN	NFAEN
Value after reset:	0	0	0	0	0	0	0	0

Bit	Symbol	Bit Name	Description	R/W
b0	NFAEN	Noise Filter A Enable	0: The noise filter for the MTIOCnA pin is disabled 1: The noise filter for the MTIOCnA pin is enabled	R/W
b1	NFBEN	Noise Filter B Enable	0: The noise filter for the MTIOCnB pin is disabled 1: The noise filter for the MTIOCnB pin is enabled	R/W
b2	NFCEN	Noise Filter C Enable*1	0: The noise filter for the MTIOCnC pin is disabled 1: The noise filter for the MTIOCnC pin is enabled	R/W
b3	NFDEN	Noise Filter D Enable*1	0: The noise filter for the MTIOCnD pin is disabled 1: The noise filter for the MTIOCnD pin is enabled	R/W
b5, b4	NFCS[1:0]	Noise Filter Clock Select	b5 b4 0 0: PCLK/1 0 1: PCLK/8 1 0: PCLK/32 1 1: The clock source for counting is the external clock	R/W
b7, b6	—	Reserved	These bits are read as 0. The write value should be 0.	R/W

Note 1. These bits are reserved in MTU1 and MTU2. These bits are read as 0, and writing to them is not possible.

The MTUn.NFCR registers (n = 0 to 4) enable and disable the noise filters for the MTIOCnm (n = 0 to 4; m = A to D) pins and sets the sampling clocks for the noise filters.

NFAEN Bit (Noise Filter A Enable)

This bit disables or enables the noise filter for input from the MTIOCnA pin. Since unexpected edges may be internally generated when the value of the NFAEN bit is changed, select the output compare function in the timer I/O control register and set the TMDR.MD[3:0] bits to a value other than 0000b (normal mode) before changing the value.

NFBEN Bit (Noise Filter B Enable)

This bit disables or enables the noise filter for input from the MTIOCnB pin. Since unexpected edges may be internally generated when the value of the NFBEN bit is changed, select the output compare function in the timer I/O control register and set the TMDR.MD[3:0] bits to a value other than 0000b (normal mode) before changing the value.

NFCEN Bit (Noise Filter C Enable)

This bit disables or enables the noise filter for input from the MTIOCnC pin. Since unexpected edges may be internally generated when the value of the NFCEN bit is changed, select the output compare function in the timer I/O control register and set the TMDR.MD[3:0] bits to a value other than 0000b (normal mode) before changing the value.

NFDEN Bit (Noise Filter D Enable)

This bit disables or enables the noise filter for input from the MTIOCnD pin. Since unexpected edges may be internally generated when the value of the NFDEN bit is changed, select the output compare function in the timer I/O control register and set the TMDR.MD[3:0] bits to a value other than 0000b (normal mode) before changing the value.

NFCS[1:0] Bits (Noise Filter Clock Select)

These bits set the sampling interval for the noise filters. When setting the NFCS[1:0] bits, wait for two cycles of the selected sampling interval before setting the input-capture function. When the NFCS[1:0] bits are set to 11b, selecting the external clock as the source to drive counting, wait for two cycles of the external clock before setting the input-capture function.

- MTU5.NFCR

Address(es): MTU5.NFCR 000D 0A95h

	b7	b6	b5	b4	b3	b2	b1	b0
	—	—	NFCS[1:0]		—	NFWEN	NFVEN	NFUEN
Value after reset:	0	0	0	0	0	0	0	0

Bit	Symbol	Bit Name	Description	R/W
b0	NFUEN	Noise Filter U Enable	0: The noise filter for the MTIC5U pin is disabled. 1: The noise filter for the MTIC5U pin is enabled.	R/W
b1	NFVEN	Noise Filter V Enable	0: The noise filter for the MTIC5V pin is disabled. 1: The noise filter for the MTIC5V pin is enabled.	R/W
b2	NFWEN	Noise Filter W Enable	0: The noise filter for the MTIC5W pin is disabled. 1: The noise filter for the MTIC5W pin is enabled.	R/W
b3	—	Reserved	This bit is read as 0. The write value should be 0.	R/W
b5, b4	NFCS[1:0]	Noise Filter Clock Select	b5 b4 0 0: PCLK/1 0 1: PCLK/8 1 0: PCLK/32 1 1: The clock source for counting is the external clock.	R/W
b7, b6	—	Reserved	These bits are read as 0. The write value should be 0.	R/W

The MTU5.NFCR register is 8-bit readable and writable register. This register controls enabling and disabling of the noise filters for the MTIC5m (m = U, V, W) pins and sets the sampling clock for the noise filters.

NFUEN Bit (Noise Filter U Enable)

This bit disables or enables the noise filter for input from the MTIC5U pin. Since unexpected edges may be internally generated when the value of the NFUEN bit is changed, select the compare-match function in the timer I/O control register before changing the value.

NFVEN Bit (Noise Filter V Enable)

This bit disables or enables the noise filter for input from the MTIC5V pin. Since unexpected edges may be internally generated when the value of the NFVEN bit is changed, select the compare-match function in the timer I/O control register before changing the value.

NFWEN Bit (Noise Filter W Enable)

This bit disables or enables the noise filter for input from the MTIC5W pin. Since unexpected edges may be internally generated when the value of the NFWEN bit is changed, select the compare-match function in the timer I/O control register before changing the value.

NFCS[1:0] Bits (Noise Filter Clock Select)

These bits set the sampling interval for the noise filters. When setting the NFCS[1:0] bits, wait for two cycles of the selected sampling interval before setting the input-capture function.

22.2.32 Bus Master Interface

The timer counters (TCNT), timer general registers (TGR), timer subcounter (TCNTS), timer cycle buffer register (TCBR), timer dead time data register (TDDR), timer cycle data register (TCDR), timer A/D conversion start request control register (TADCR), timer A/D conversion start request cycle set registers (TADCORA/TADCORB), and timer A/D conversion start request cycle set buffer registers (TADCOBRA/TADCOBRB) are 16-bit registers. A 16-bit data bus to the bus master enables 16-bit read/write access. 8-bit read/write is not allowed. Access the registers in 16-bit units. All registers other than the above registers are 8-bit registers, so read/write access should be performed in 8-bit units.

22.3 Operation

22.3.1 Basic Functions

Each channel has the TCNT counter and the TGR register. The TCNT counter performs up-counting, and is also capable of free-running operation, periodic counting, and external event counting.
Each TGR register can be used as an input capture register or an output compare register.

(1) Counter Operation

When one of bits CST0 to CST4 in the TSTR register or bits CSTU5, CSTV5, and CSTW5 in the MTU5.TSTR register is set to 1, the TCNT counter for the corresponding channel begins counting. The TCNT counter can operate as a free-running counter, periodic counter, for example.

(a) Example of Count Operation Setting Procedure

Figure 22.4 shows an example of the count operation setting procedure.

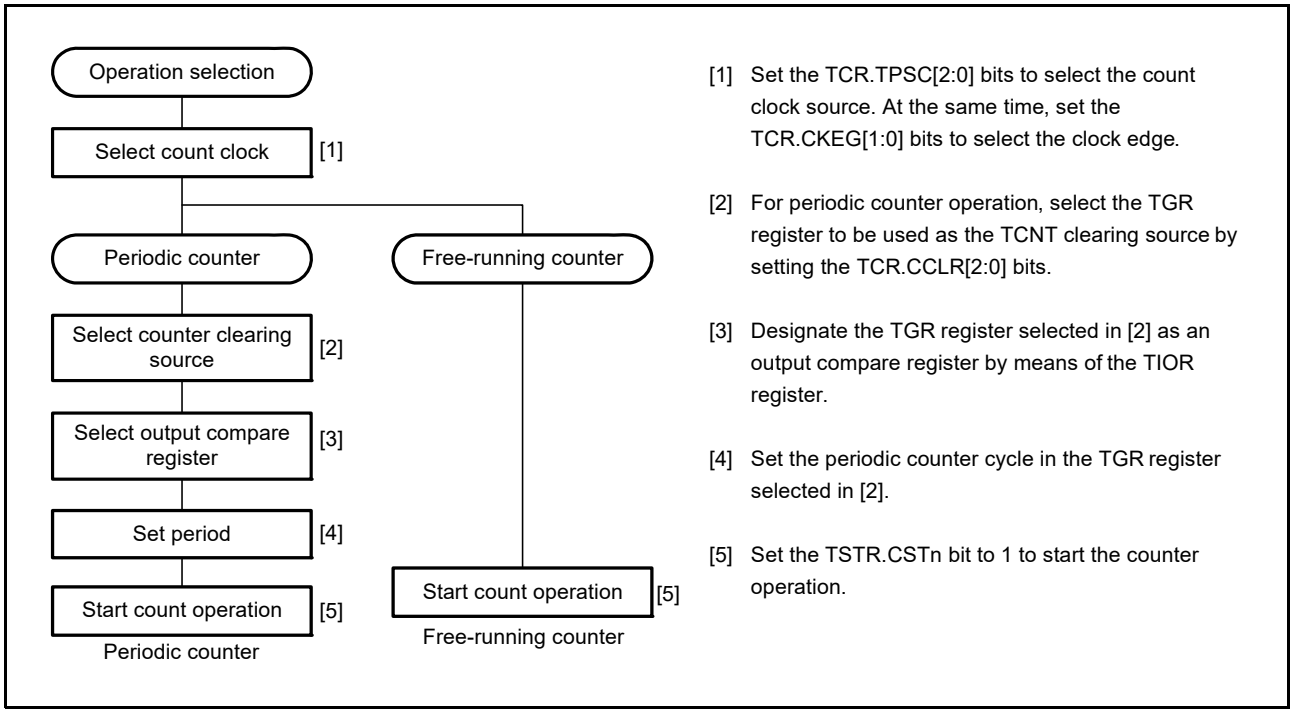

Figure 22.4 Example of Counter Operation Setting Procedure

(b) Free-Running Count Operation and Periodic Count Operation

Immediately after a reset, the MTU's TCNT counters are all designated as free-running counters. When the relevant CSTn bit in the TSTR register is set to 1, the corresponding TCNT counter starts up-count operation as a free-running counter. When TCNT overflows (from FFFFh to 0000h), the MTU requests an interrupt if the corresponding TCIEV bit in the TIER register is 1. After an overflow, the TCNT counter starts counting up again from 0000h.
Figure 22.5 illustrates free-running counter operation.

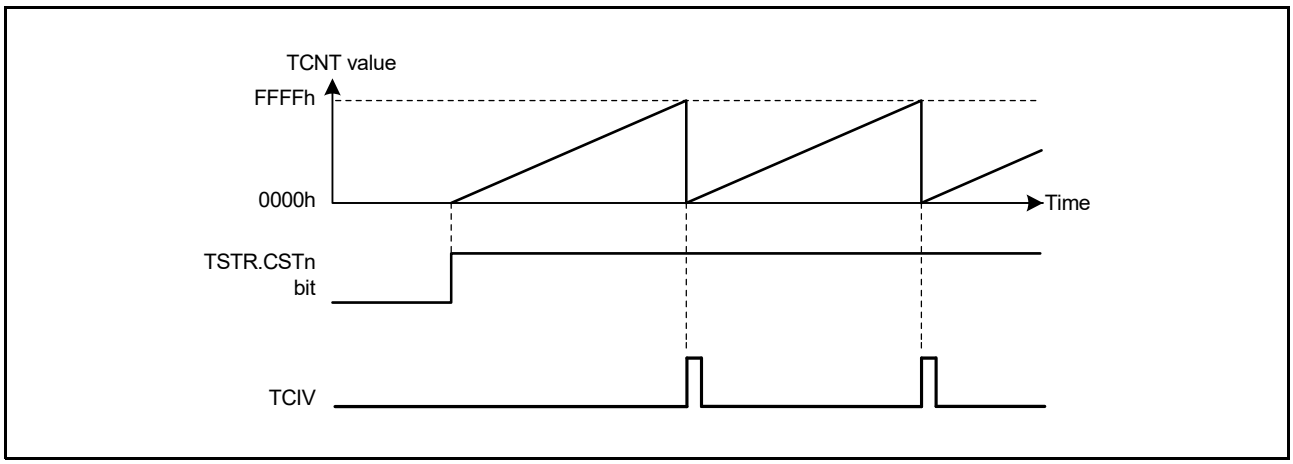

Figure 22.5 Free-Running Counter Operation

When compare match is selected as the TCNT clearing source, the TCNT counter for the relevant channel performs periodic count operation. The TGR register for setting the cycle is designated as an output compare register, and counter clearing by compare match is selected by means of the TCR.CCLR[2:0] bits. After the settings have been made, the TCNT counter starts up-count operation as a periodic counter when the corresponding bit in the TSTR register is set to 1. When the count matches the value in the TGR register, the TCNT counter is set to 0000h.
If the value of the corresponding TIER.TGIE bit is 1 at this point, the MTU requests an interrupt. After a compare match, the TCNT counter starts counting up again from 0000h.
Figure 22.6 illustrates periodic counter operation.

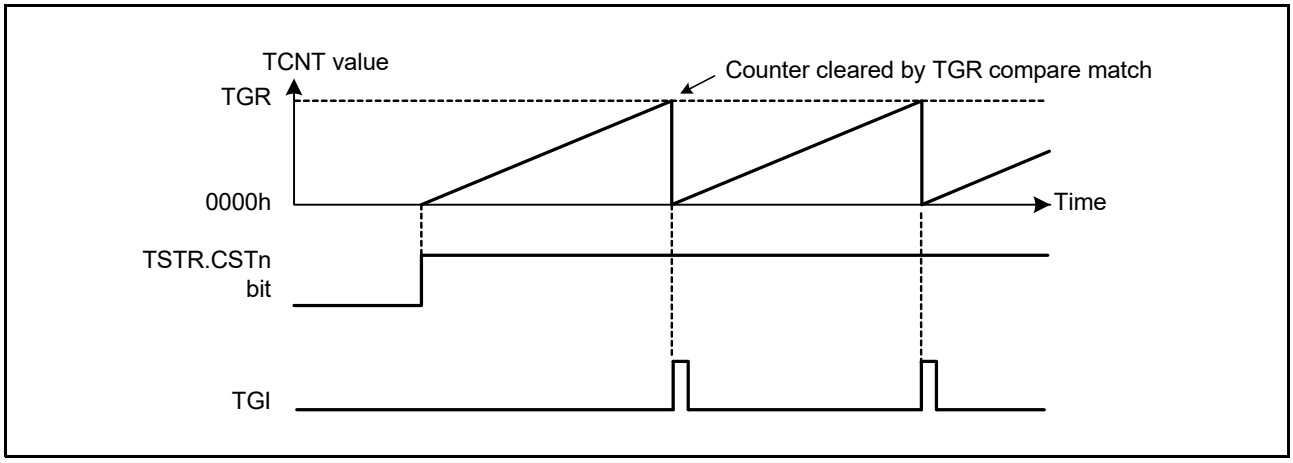

Figure 22.6 Periodic Counter Operation

(2) Waveform Output by Compare Match

The MTU can output low or high or toggle output from the corresponding output pin using compare match.

(a) Example of Procedure for Setting Waveform Output by Compare Match

Figure 22.7 shows an example of the procedure for setting waveform output by compare match.

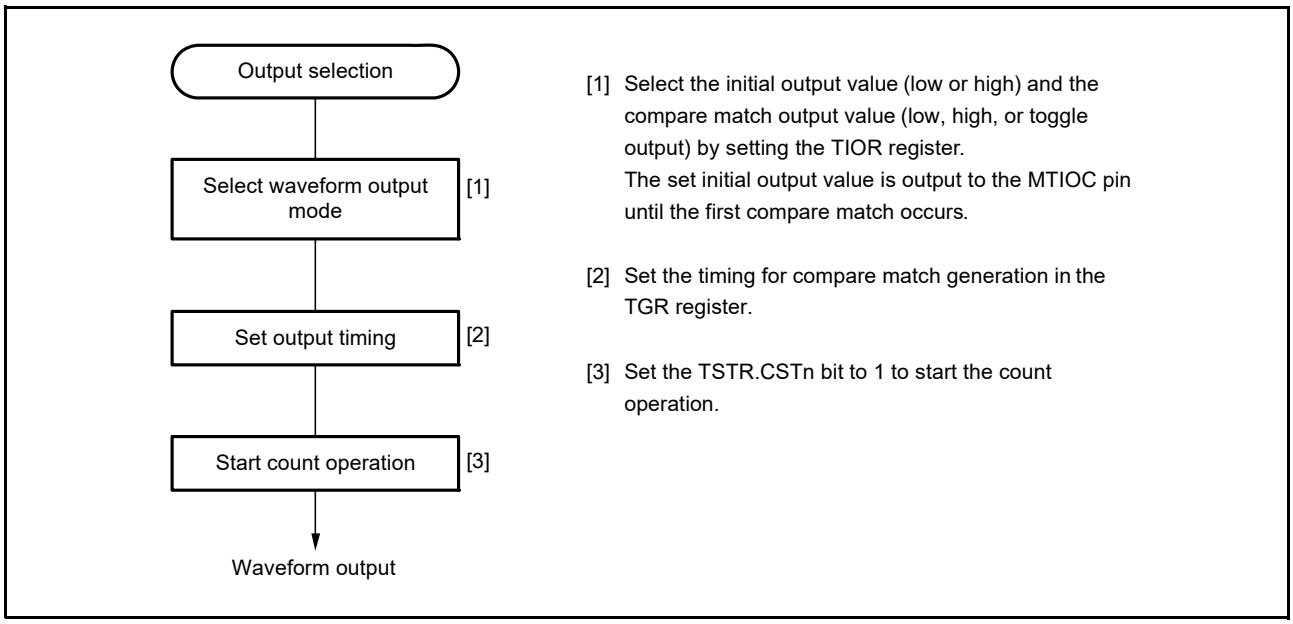

Figure 22.7 Example of Procedure for Setting Waveform Output by Compare Match

(b) Examples of Waveform Output Operation

Figure 22.8 shows an example of low output and high output.
In this example, the TCNT counter has been designated as a free-running counter, and settings have been made so that high is output by compare match A and low is output by compare match B. When the pin level is the same as the specified level, the pin level does not change.

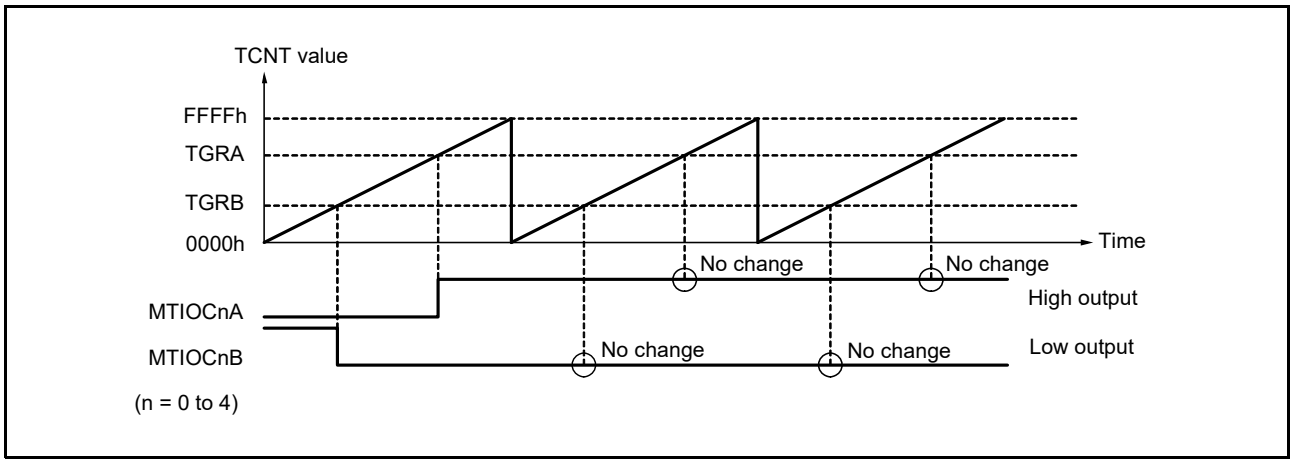

Figure 22.8 Example of Low Output and High Output Operation

Figure 22.9 shows an example of toggle output.
In this example, the TCNT counter has been designated as a periodic counter (with counter clearing on compare match B), and settings have been made so that the output is toggled by both compare match A and compare match B.

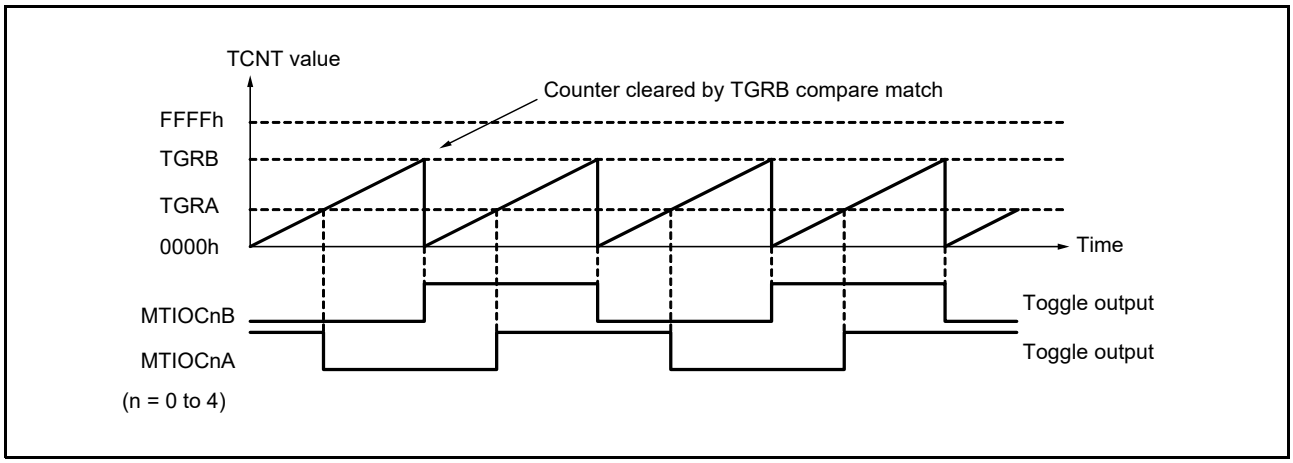

Figure 22.9 Example of Toggle Output Operation

(3) Input Capture Function

The TCNT value can be transferred to the TGR register on detection of the input edge of the MTIOCnm (n = 0 to 4; m = A to D) pin and MTIC5m (m = W, V, U) pin.
The rising edge, falling edge, or both edges can be selected as the detection edge. For MTU0 and MTU1, another channel's count clock or compare match signal can also be specified as the input capture source.

Note: When another channel's count clock is used as the input capture input for MTU0 and MTU1, PCLK/1 should not be selected as the count clock used for input capture input. Input capture will not be generated if PCLK/1 is selected.

(a) Example of Input Capture Operation Setting Procedure

Figure 22.10 shows an example of the input capture operation setting procedure.

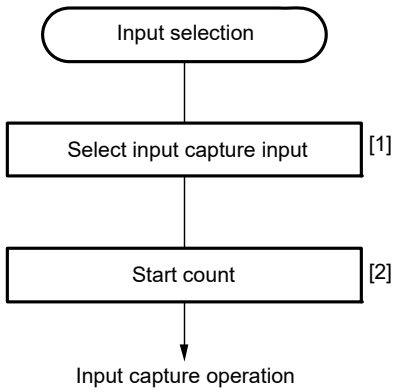

[1] Designate the TGR register as an input capture register by means of the TIOR register, and select rising edge, falling edge, or both edges as the input capture source and input signal edge.

[2] Set the TSTR.CSTn bit to 1 to start the count operation.

Figure 22.10 Example of Input Capture Operation Setting Procedure

(b) Example of Input Capture Operation

Figure 22.11 shows an example of input capture operation.

In this example, both rising and falling edges have been selected as the MTIOCnA pin input capture input edge, the falling edge has been selected as the MTIOCnB pin input capture input edge, and counter clearing by the TGRB input capture has been designated for the TCNT counter.

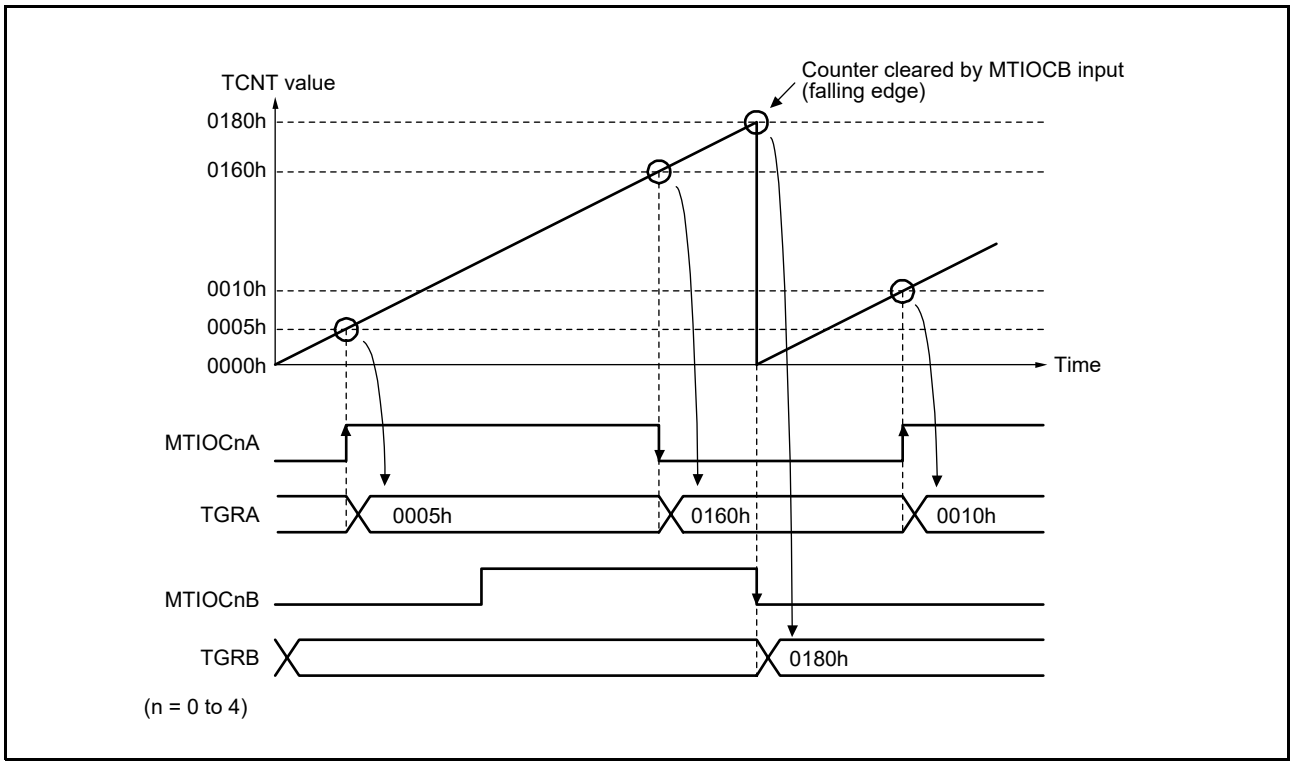

Figure 22.11 Example of Input Capture Operation

22.3.2 Synchronous Operation

In synchronous operation, the values in multiple TCNT counters can be modified simultaneously (synchronous setting). In addition, multiple TCNT counters can be cleared simultaneously (synchronous clearing) by making the appropriate setting in the TCR register.
Synchronous operation increases the number of the TGR registers assigned to a single time base.
MTU0 to MTU4 can all be designated for synchronous operation.
MTU5 cannot be used for synchronous operation.

(1) Example of Synchronous Operation Setting Procedure

Figure 22.12 shows an example of the synchronous operation setting procedure.

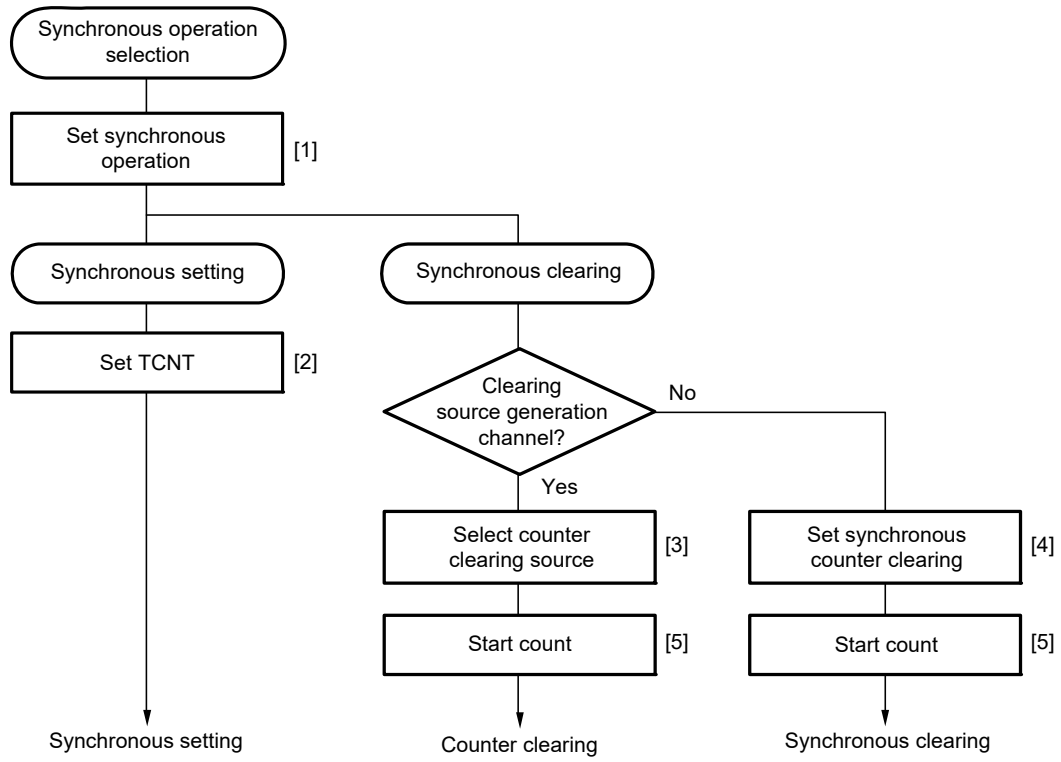

[1] Set 1 in the TSYR.SYNCn bit (n = 0 to 4) corresponding to the channels to be designated for synchronous operation.

[2] When the TCNT counter of any of the channels designated for synchronous operation is written to, the same value is simultaneously written to the other TCNT counters.

[3] Use the TCR.CCLR[2:0] bits to specify TCNT clearing by input capture/output compare, etc.

[4] Use the TCR.CCLR[2:0] bits to designate synchronous clearing for the counter clearing source.

[5] Set 1 in the TSTR.CSTn bit for the relevant channels, to start the count operation.

Figure 22.12 Example of Synchronous Operation Setting Procedure

(2) Example of Synchronous Operation

Figure 22.13 shows an example of synchronous operation.

In this example, synchronous operation and PWM mode 1 have been designated for MTU0 to MTU2, compare match of the MTU0.TGRB register has been set as the counter clearing source in MTU0, and synchronous clearing has been set for the counter clearing source in MTU1 and MTU2.

Three-phase PWM waveforms are output from pins MTIOC0A, MTIOC1A, and MTIOC2A. At this time, synchronous setting and synchronous clearing by MTU0.TGRB compare match are performed for the TCNT counters in MTU0 to MTU2, and the data set in the MTU0.TGRB register is used as the PWM cycle.

For details of PWM modes, refer to section 22.3.5, PWM Modes.

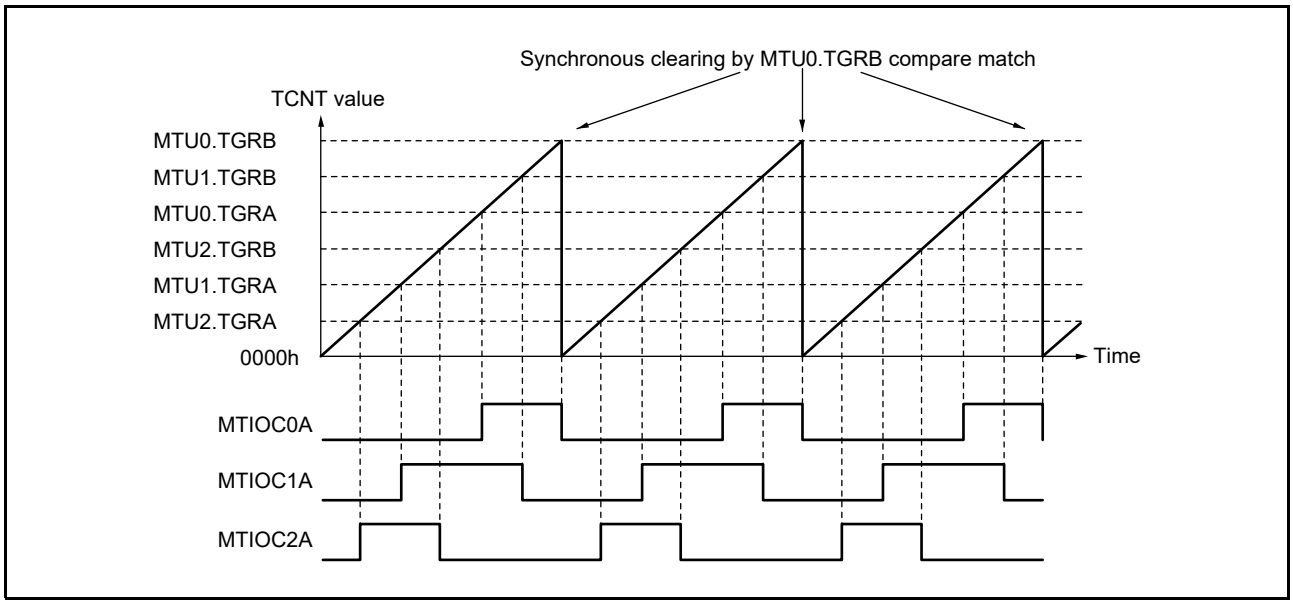

Figure 22.13 Example of Synchronous Operation

22.3.3 Buffer Operation

Buffer operation, provided for MTU0, MTU3, and MTU4, enables registers TGRC and TGRD to be used as buffer registers. In MTU0, TGRF register can also be used as a buffer register.
Buffer operation differs depending on whether TGR has been designated as an input capture register or as a compare match register.

Note: MTU0.TGRE register cannot be designated as an input capture register and can only operate as a compare match register.

Table 22.43 shows the register combinations used in buffer operation.

Table 22.43 Register Combinations in Buffer Operation

Channel	Timer General Register	Buffer Register
MTU0	TGRA	TGRC
	TGRB	TGRD
	TGRE	TGRF
MTU3	TGRA	TGRC
	TGRB	TGRD
MTU4	TGRA	TGRC
	TGRB	TGRD

- When TGR register is an output compare register

When a compare match occurs, the value in the buffer register for the corresponding channel is transferred to the timer general register.
This operation is illustrated in Figure 22.14.

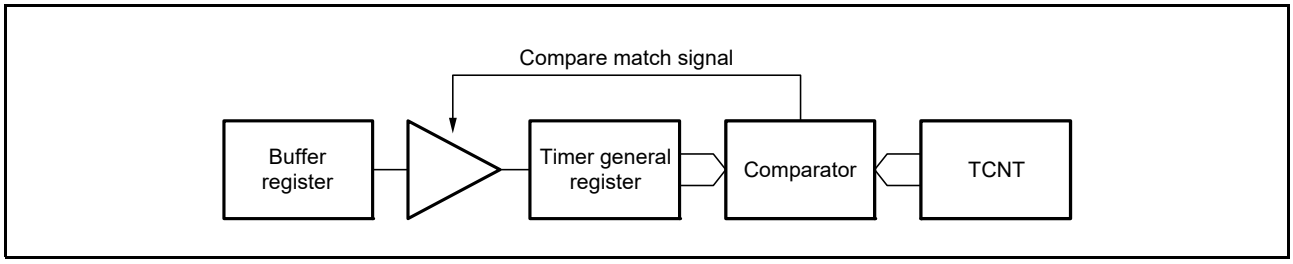

Figure 22.14 Compare Match Buffer Operation

- When TGR register is an input capture register

When an input capture occurs, the value in the TCNT counter is transferred to the TGR register and the value previously held in the TGR register is transferred to the buffer register.
This operation is illustrated in Figure 22.15.

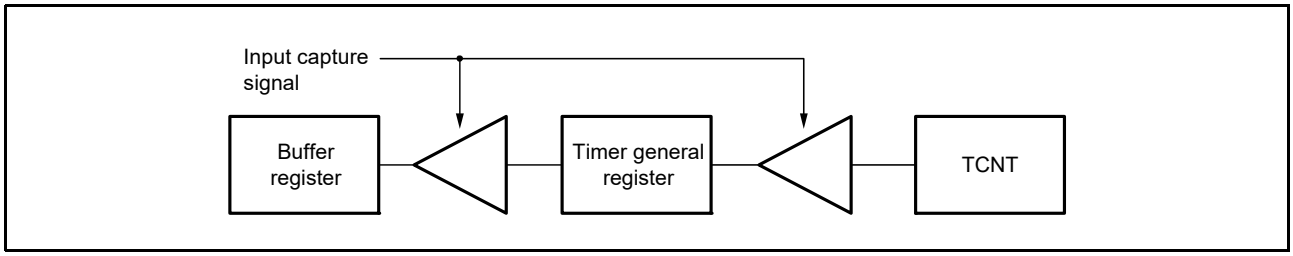

Figure 22.15 Input Capture Buffer Operation

(1) Example of Buffer Operation Setting Procedure

Figure 22.16 shows an example of the buffer operation setting procedure.

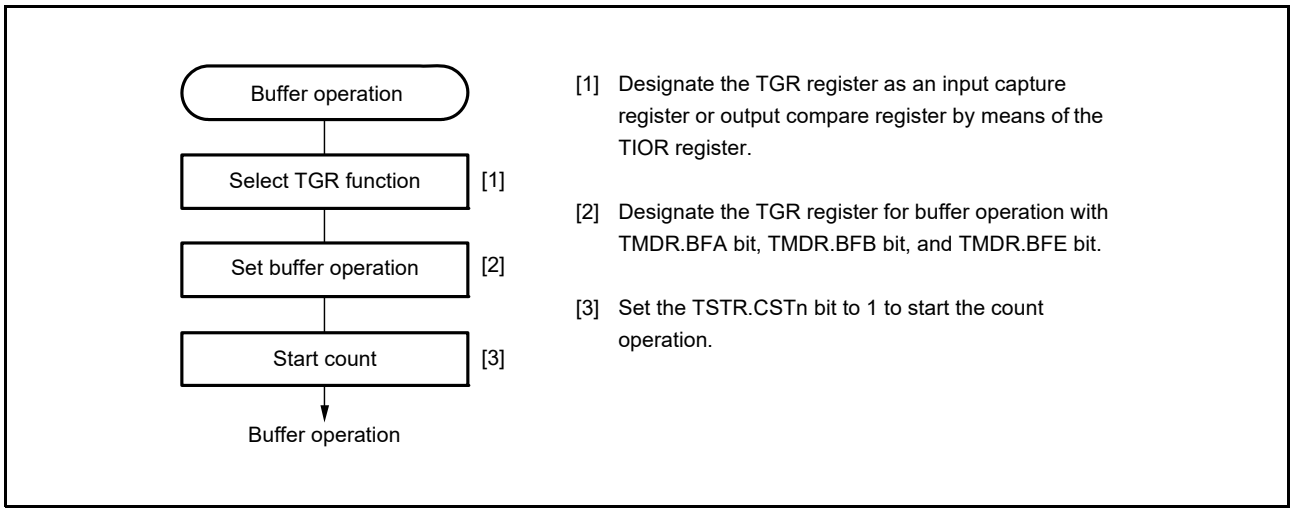

Figure 22.16 Example of Buffer Operation Setting Procedure

(2) Examples of Buffer Operation

(a) When TGR register is an Output Compare Register

Figure 22.17 shows an operation example in which PWM mode 1 has been designated for MTU0, and buffer operation has been designated for registers TGRA and TGRC. The settings used in this example are TCNT clearing by compare match B, high output at compare match A, and low output at compare match B. In this example, the TBTM.TTSA bit is set to 0.

As buffer operation has been set, when compare match A occurs, the output changes and the value in buffer register TGRC is simultaneously transferred to timer general register TGRA. This operation is repeated each time compare match A occurs.

For details of PWM modes, refer to section 22.3.5, PWM Modes.

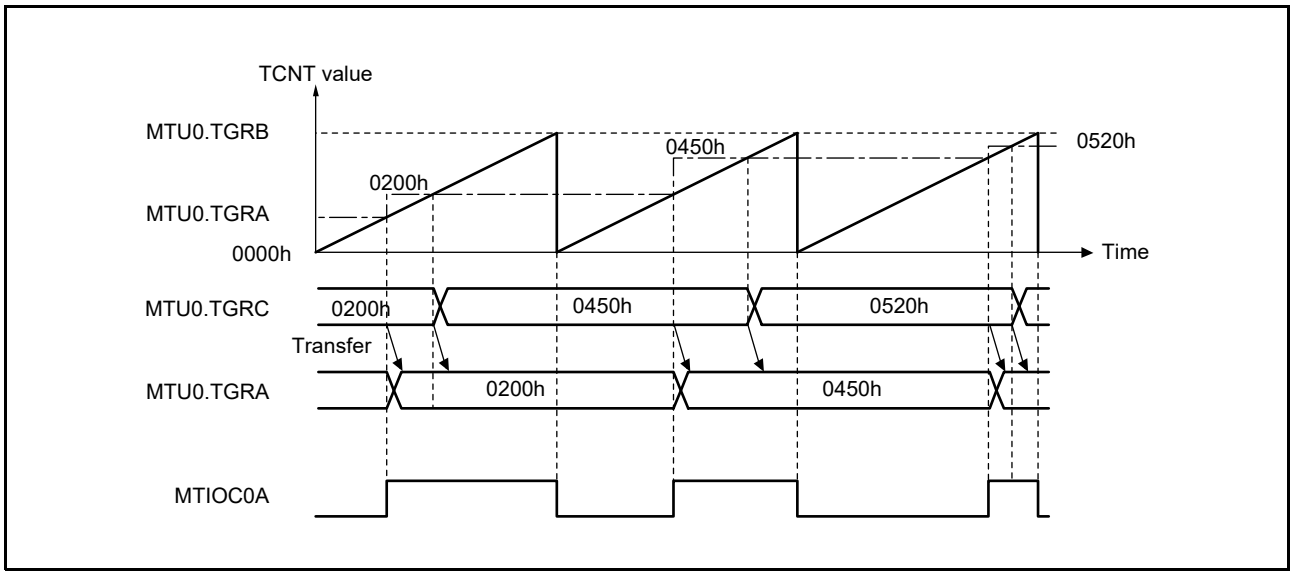

Figure 22.17 Example of Buffer Operation (1)

(b) When TGR register is an Input Capture Register

Figure 22.18 shows an operation example in which the TGRA register has been designated as an input capture register, and buffer operation has been designated for registers TGRA and TGRC.
Counter clearing by TGRA input capture has been set for the TCNT counter, and both rising and falling edges have been selected as the MTIOCnA pin input capture input edge.
As buffer operation has been set, when the TCNT value is transferred to the TGRA register upon occurrence of input capture A, the value previously stored in the TGRA register is simultaneously transferred to the TGRC register.

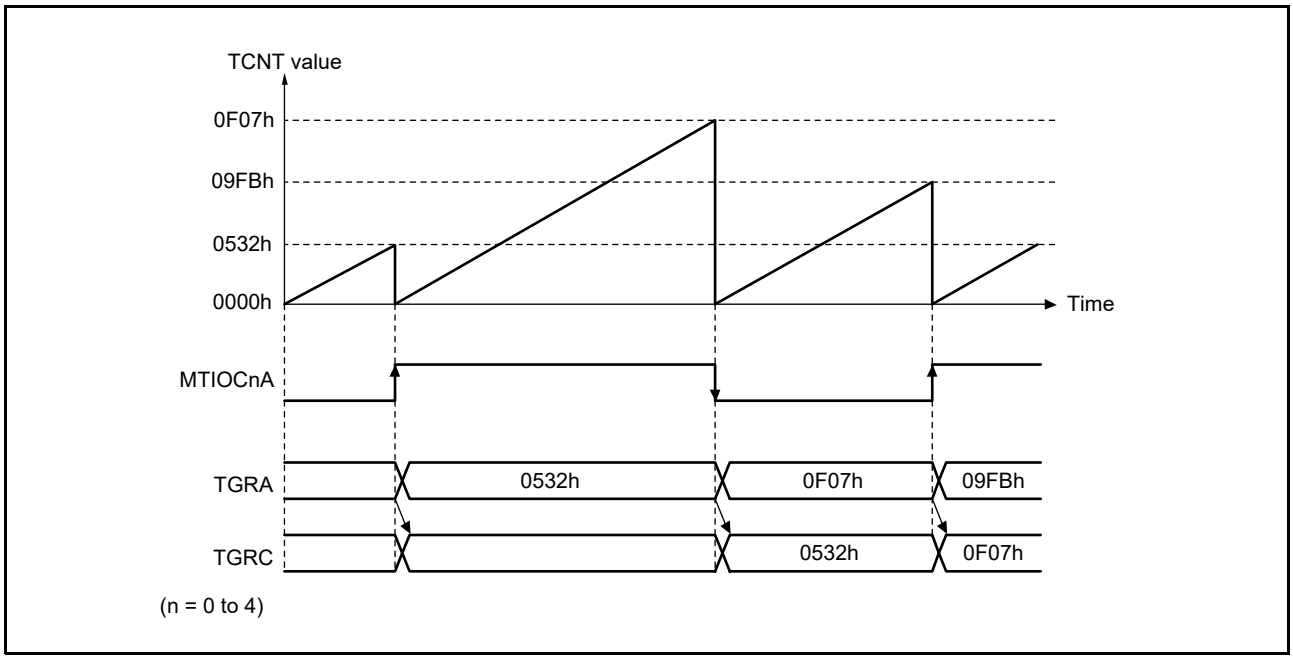

Figure 22.18 Example of Buffer Operation (2)

(3) Selecting Timing for Transfer from Buffer Registers to Timer General Registers in Buffer Operation

The timing for transfer from buffer registers to timer general registers can be selected in PWM mode 1 or 2 for MTU0 or in PWM mode 1 for MTU3 and MTU4 by setting the timer buffer operation transfer mode registers (MTU0.TBTM, MTU3.TBTM, and MTU4.TBTM). Either compare match (initial setting) or TCNT clearing can be selected for the transfer timing. TCNT clearing as transfer timing is one of the following cases.

- When the TCNT counter overflows (FFFFh → 0000h)
- When 0000h is written to the TCNT counter during counting
- When the TCNT counter is set to 0000h under the condition specified in the TCR.CCLR[2:0] bits

Note: The TBTM register must be modified only while the TCNT counter stops.

Figure 22.19 shows an operation example in which PWM mode 1 is designated for MTU0 and buffer operation is designated for registers MTU0.TGRA and MTU0.TGRC. The settings used in this example are MTU0.TCNT clearing by compare match B, high output at compare match A, and low output at compare match B. The MTU0.TBTM.TTSA bit is set to 1.

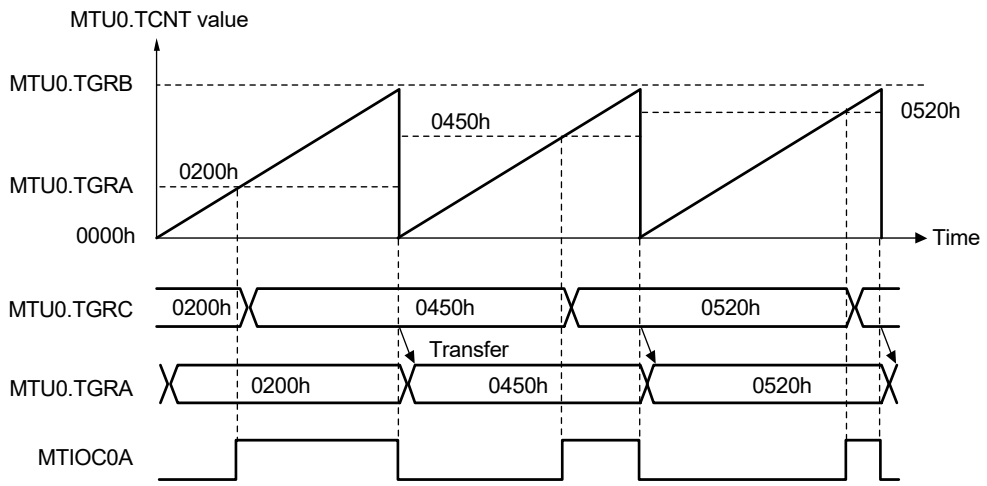

Figure 22.19 Example of Buffer Operation When MTU0.TCNT Clearing is Selected for MTU0.TGRC-to-MTU0.TGRA Transfer Timing

22.3.4 Cascaded Operation

In cascaded operation, 16-bit counters in different two channels are used together as a 32-bit counter.
This function works when overflow/underflow of the MTU2.TCNT counter is selected as the count clock for MTU1 through the TCR.TPSC[2:0] bits.
Underflow occurs only when the lower 16 bits of the TCNT counter is in phase counting mode.
Table 22.44 lists the register combinations used in cascaded operation.

Note: When phase counting mode is set for MTU1 or MTU2, the count clock setting is invalid and the counters operate independently in phase counting mode.

Table 22.44 Cascaded Combinations

Combination	Upper 16 Bits	Lower 16 Bits
MTU1 and MTU2	MTU1.TCNT	MTU2.TCNT

For simultaneous input capture of MTU1.TCNT and MTU2.TCNT during cascaded operation, additional input capture input pins can be specified by the TICCR register. The input-capture condition is of edges in the signal produced by taking the logical OR of the input level on the main input pin and the input level on the added input pin. Accordingly, if either is at the high, a change in the level of the other will not produce an edge for detection. For details, refer to (4) Cascaded Operation Example (c). For input capture in cascade connection, refer to section 22.6.22, Simultaneous Input Capture in MTU1.TCNT and MTU2.TCNT in Cascade Connection.
Table 22.45 lists the TICCR setting and input capture input pins.

Table 22.45 TICCR Setting and Input Capture Input Pins

Target Input Capture	TICCR Setting	Input Capture Input Pin
Input capture from MTU1.TCNT to MTU1.TGRA	I2AE bit = 0 (initial value)	MTIOC1A
	I2AE bit = 1	MTIOC1A, MTIOC2A
Input capture from MTU1.TCNT to MTU1.TGRB	I2BE bit = 0 (initial value)	MTIOC1B
	I2BE bit = 1	MTIOC1B, MTIOC2B
Input capture from MTU2.TCNT to MTU2.TGRA	I1AE bit = 0 (initial value)	MTIOC2A
	I1AE bit = 1	MTIOC2A, MTIOC1A
Input capture from MTU2.TCNT to MTU2.TGRB	I1BE bit = 0 (initial value)	MTIOC2B
	I1BE bit = 1	MTIOC2B, MTIOC1B

(1) Example of Cascaded Operation Setting Procedure

Figure 22.20 shows an example of the cascaded operation setting procedure.

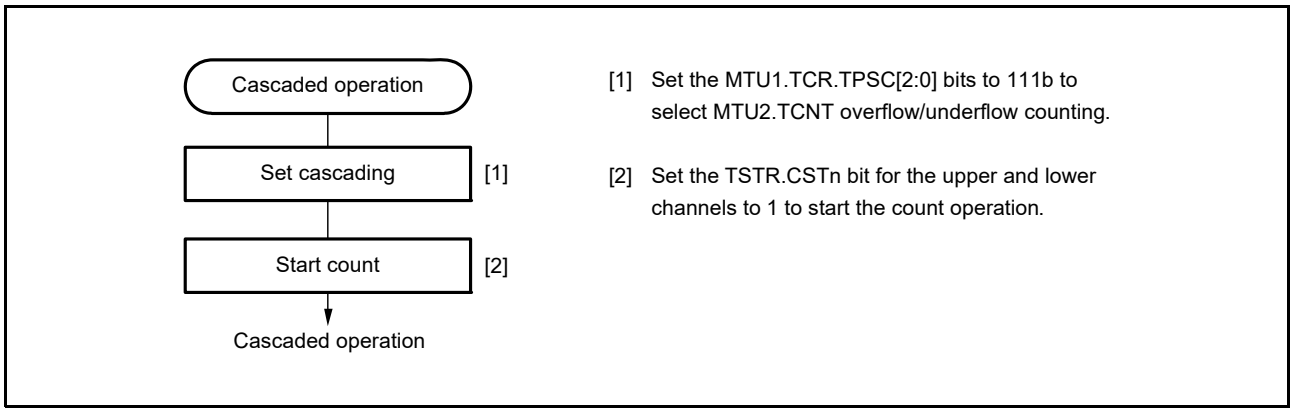

Figure 22.20 Cascaded Operation Setting Procedure

(2) Cascaded Operation Example (a)

Figure 22.21 shows the operation when the MTU1.TCNT counter is set for counting at MTU2.TCNT overflow/ underflow and MTU2 is set for phase counting mode 1 while counters MTU1.TCNT and MTU2.TCNT are cascaded. The MTU1.TCNT counter is incremented by MTU2.TCNT overflow and decremented by MTU2.TCNT underflow.

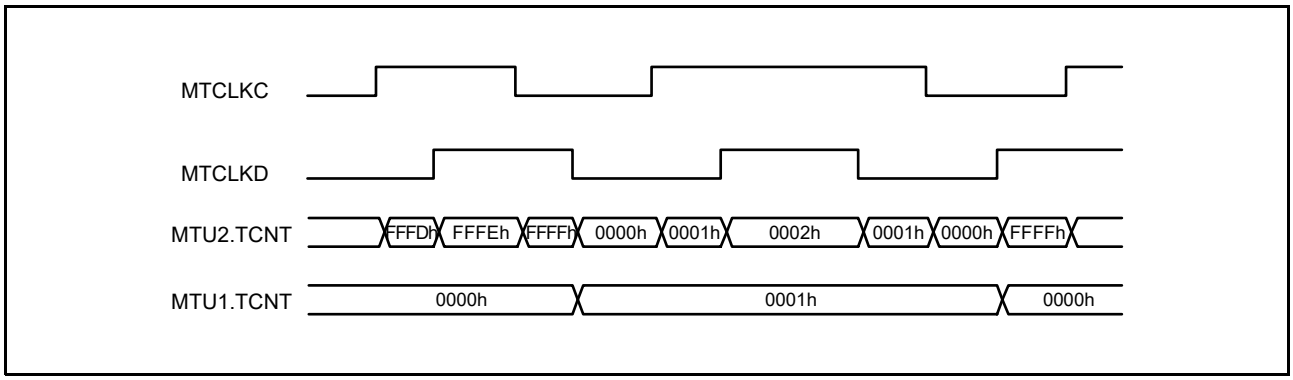

Figure 22.21 Cascaded Operation Example (a)

(3) Cascaded Operation Example (b)

Figure 22.22 illustrates the operation when counters MTU1.TCNT and MTU2.TCNT have been cascaded and the TICCR.I2AE bit has been set to 1 to include the MTIOC2A pin in the MTU1.TGRA input capture conditions. In this example, the MTU1.TIOR.IOA[3:0] bits have selected the MTIOC1A rising edge for the input capture timing while the MTU2.TIOR.IOA[3:0] bits have selected the MTIOC2A rising edge for the input capture timing.
Under these conditions, the rising edge of both MTIOC1A and MTIOC2A is used for the MTU1.TGRA input capture condition. For the MTU2.TGRA input capture condition, the MTIOC2A rising edge is used.

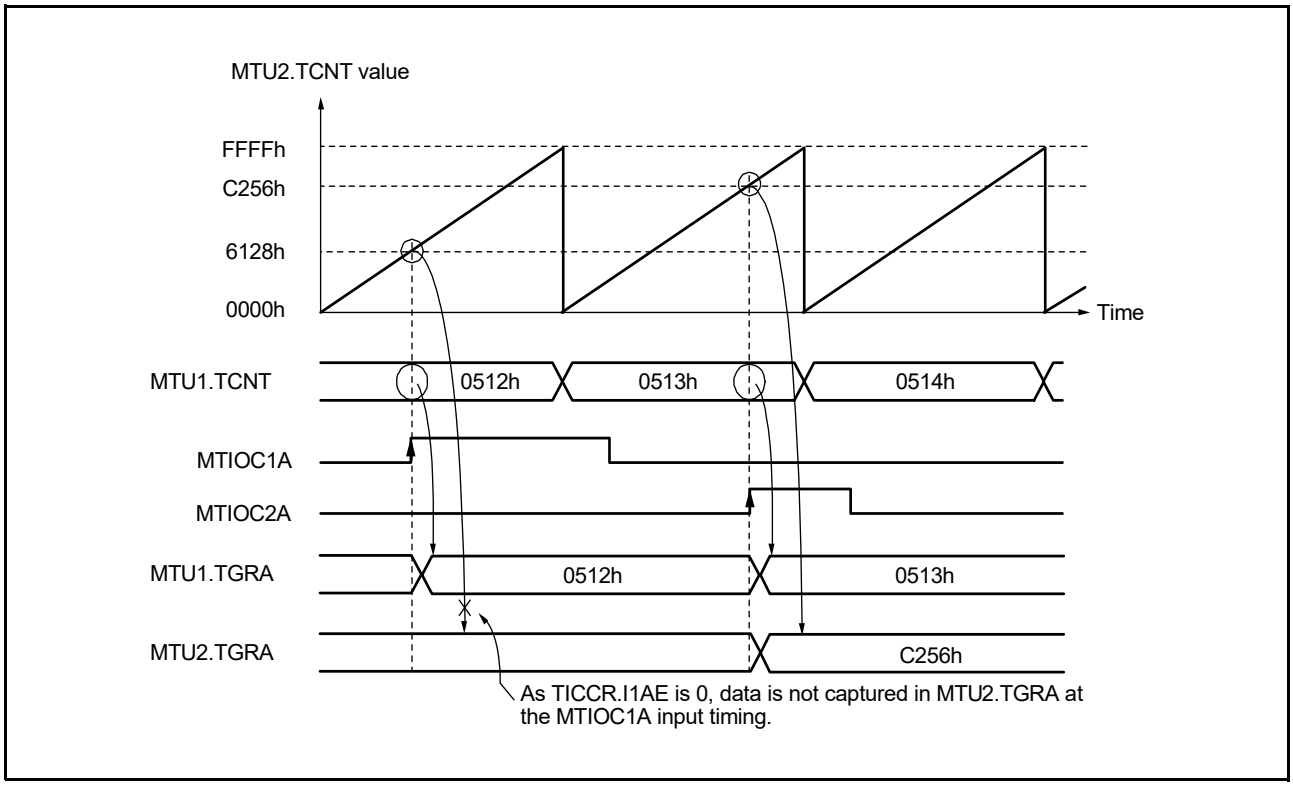

Figure 22.22 Cascaded Operation Example (b)

(4) Cascaded Operation Example (c)

Figure 22.23 illustrates the operation when counters MTU1.TCNT and MTU2.TCNT have been cascaded and the I2AE and I1AE bits in TICCR register have been set to 1 to include the MTIOC2A and MTIOC1A pins in the MTU1.TGRA and MTU2.TGRA input capture conditions, respectively. In this example, the IOA[3:0] bits in both MTU1.TIOR and MTU2.TIOR registers have selected both the rising and falling edges for the input capture timing. Under these conditions, the OR result of MTIOC1A and MTIOC2A input is used for the MTU1.TGRA and MTU2.TGRA input capture conditions.

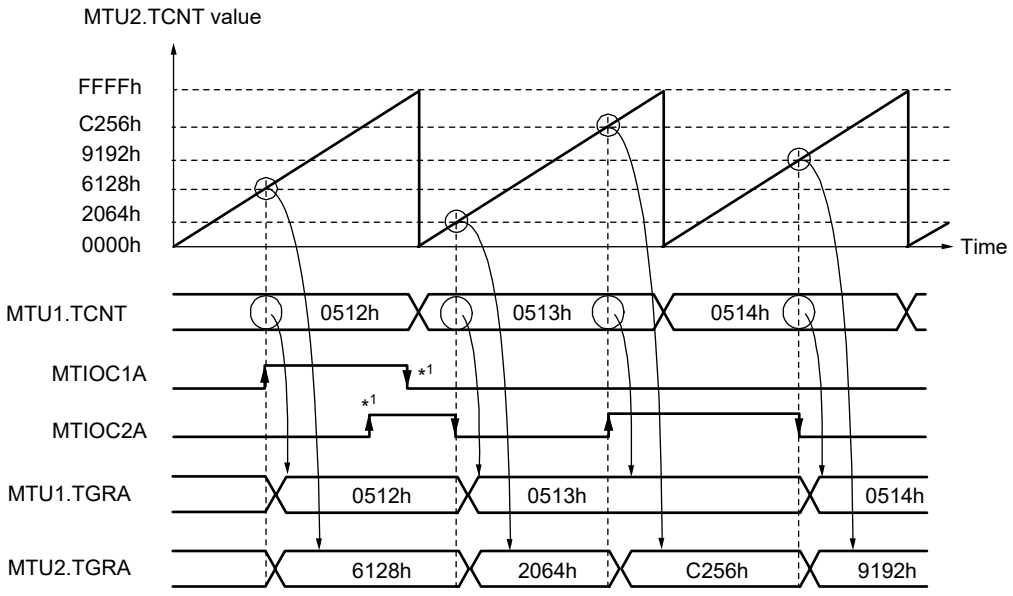

Note 1. When either input signal is at the high level, an edge in the other input signal does not act as the condition for capture.

Figure 22.23 Cascaded Operation Example (c)

(5) Cascaded Operation Example (d)

Figure 22.24 illustrates the operation when counters MTU1.TCNT and MTU2.TCNT have been cascaded and the TICCR.I2AE bit has been set to 1 to include the MTIOC2A pin in the MTU1.TGRA input capture conditions. In this example, the MTU1.TIOR.IOA[3:0] bits have selected occurrence of MTU0.TGRA compare match or input capture for the input capture timing while the MTU2.TIOR.IOA[3:0] bits have selected the MTIOC2A rising edge for the input capture timing.

Under these conditions, as the MTU1.TIOR register has selected occurrence of MTU0.TGRA compare match or input capture for the input capture timing, the MTIOC2A edge is not used for MTU1.TGRA input capture condition although the TICCR.I2AE bit has been set to 1.

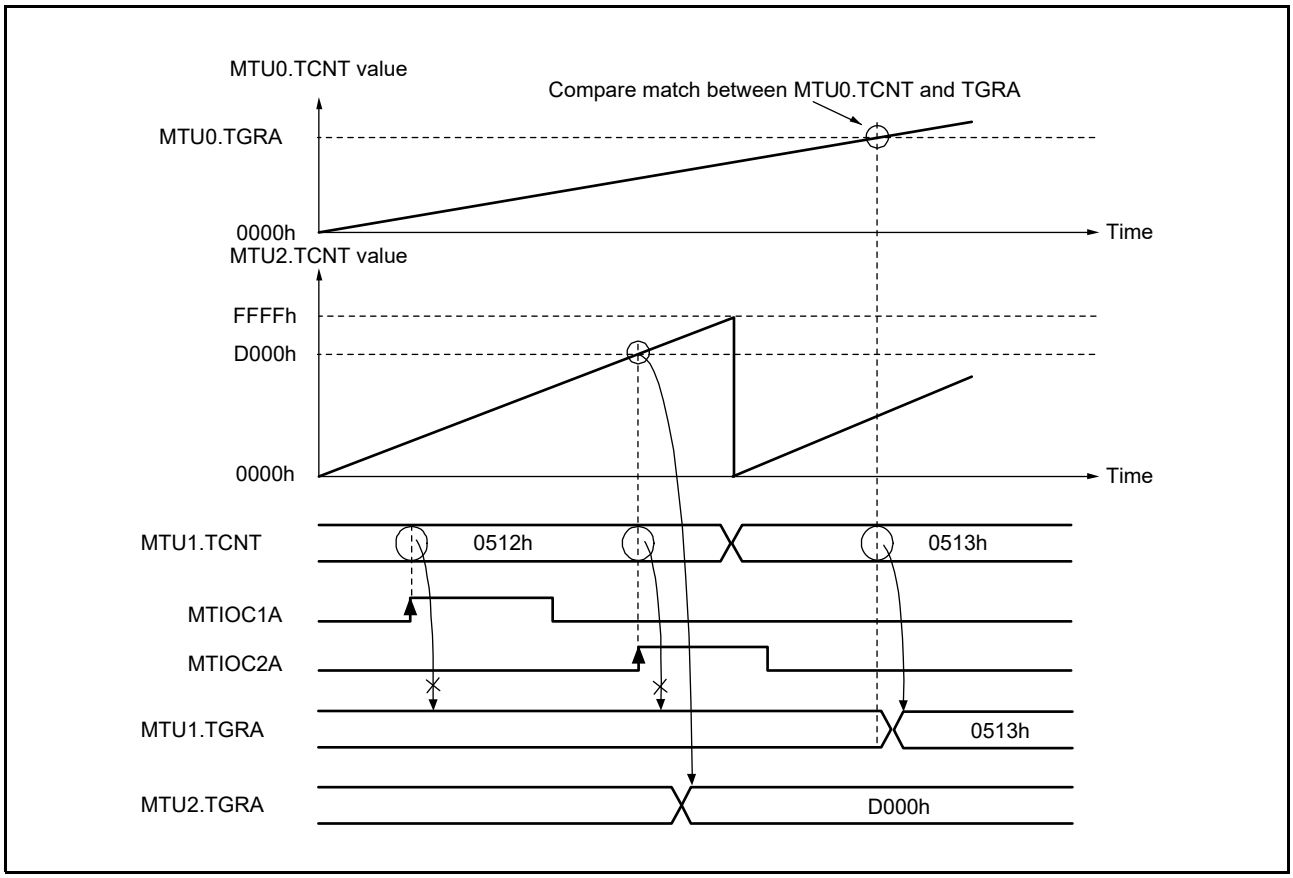

Figure 22.24 Cascaded Operation Example (d)

22.3.5 PWM Modes

PWM modes are provided to output PWM waveforms from the external pins. The output level can be selected as low, high, or toggle output in response to a compare match of each TGR register.
PWM waveforms in the range of 0% to 100% duty cycle can be output according to the TGR settings.
By designating TGR compare match as the counter clearing source, the PWM cycle can be specified in that register.
Every channel can be set to PWM mode independently. Channels set to PWM mode can perform synchronous operation with each other or other channels set to any other mode.
There are two PWM modes as described below.

(a) PWM Mode 1

PWM waveforms are output from the MTIOCnA and MTIOCnC pins by pairing the TGRA register with the TGRB register and the TGRC register with the TGRD register. The levels specified by the TIOR.IOA[3:0] and IOC[3:0] bits are output from the MTIOCnA and MTIOCnC pins at compare matches A and C, and the levels specified by the TIOR.IOB[3:0] and IOD[3:0] bits are output at compare matches B and D. The initial output value is set in the TGRA register or the TGRC register. If the values set in paired TGRs are identical, the output value does not change even when a compare match occurs.
In PWM mode 1, up to eight phases of PWM waveforms can be output.

(b) PWM Mode 2

PWM output is generated using one TGR register as the cycle register and the others as duty registers. The level specified in the TIOR register is output at compare matches. Upon counter clearing by a cycle register compare match, the initial value set in the TIOR register is output from each pin. If the values set in the cycle and duty registers are identical, the output value does not change even when a compare match occurs.
In PWM mode 2, up to eight phases of PWM waveforms can be output when using synchronous operation in combination.
The correspondence between PWM output pins and registers is listed in Table 22.46.

Table 22.46 PWM Output Registers and Output Pins

Channel	Register	Output Pins	
		PWM Mode 1	PWM Mode 2
MTU0	MTU0.TGRA	MTIOC0A	MTIOC0A
	MTU0.TGRB		MTIOC0B
	MTU0.TGRC	MTIOC0C	MTIOC0C
	MTU0.TGRD		MTIOC0D
MTU1	MTU1.TGRA	MTIOC1A	MTIOC1A
	MTU1.TGRB		MTIOC1B
MTU2	MTU2.TGRA	MTIOC2A	MTIOC2A
	MTU2.TGRB		MTIOC2B
MTU3	MTU3.TGRA	MTIOC3A	Setting prohibited
	MTU3.TGRB		
	MTU3.TGRC	MTIOC3C	
	MTU3.TGRD		
MTU4	MTU4.TGRA	MTIOC4A	
	MTU4.TGRB		
	MTU4.TGRC	MTIOC4C	
	MTU4.TGRD		

Note: In PWM mode 2, PWM output is not possible for the TGR register in which the PWM cycle is set.

(1) Example of PWM Mode Setting Procedure

Figure 22.25 shows an example of the PWM mode setting procedure.

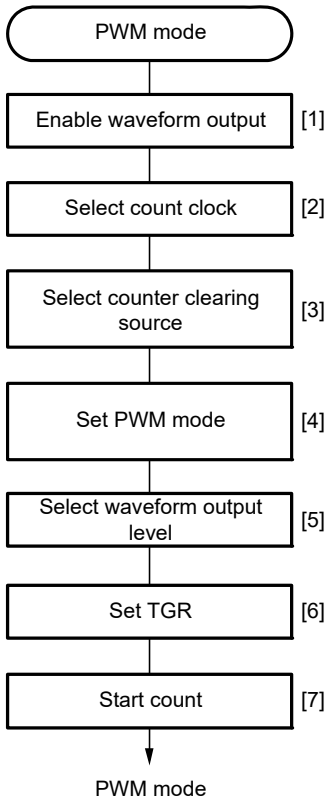

[1] Enable TOER output when outputting a waveform from the MTIOC pin of MTU3 and MTU4.

[2] Set the TCR.TPSC[2:0] bits to select the count clock source. At the same time, set the TCR.CKEG[1:0] bits to select the clock edge.

[3] Set the TCR.CCLR[2:0] bits to select the TGR register to be used as the TCNT clearing source.

[4] Select the PWM mode with the TMDR.MD[3:0] bits.

[5] Use the TIOR register to designate the TGR register as an output compare register, and select the initial value and output value.

[6] Set the cycle in the TGR register selected in [3], and set the duty in the other TGR registers.

[7] Set the TSTR.CSTn bit to 1 to start the count operation.

Figure 22.25 Example of PWM Mode Setting Procedure

(2) Examples of PWM Mode Operation

Figure 22.26 shows an example of operation in PWM mode 1.

In this example, TGRA compare match is set as the TCNT clearing source, a low level is set as the initial output value and output value for the TGRA register, and a high level is set as the output value for the TGRB register.

In this case, the value set in the TGRA register is used as the cycle, and the value set in the TGRB register is used as the duty.

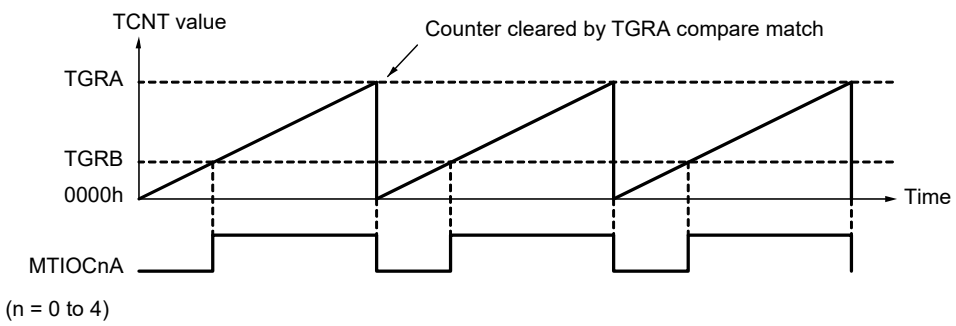

Figure 22.26 Example of PWM Mode Operation

Figure 22.27 shows an example of operation in PWM mode 2.
In this example, synchronous operation is designated for MTU0 and MTU1, MTU1.TGRB compare match is set as the TCNT clearing source, and a low level is set as the initial output value and a high level as the output value for the other TGR registers (MTU0.TGRA to MTU0.TGRD and MTU1.TGRA), outputting 5-phase PWM waveforms.
In this case, the value set in the MTU1.TGRB register is used as the cycle, and the values set in the other TGR registers are used as the duty.

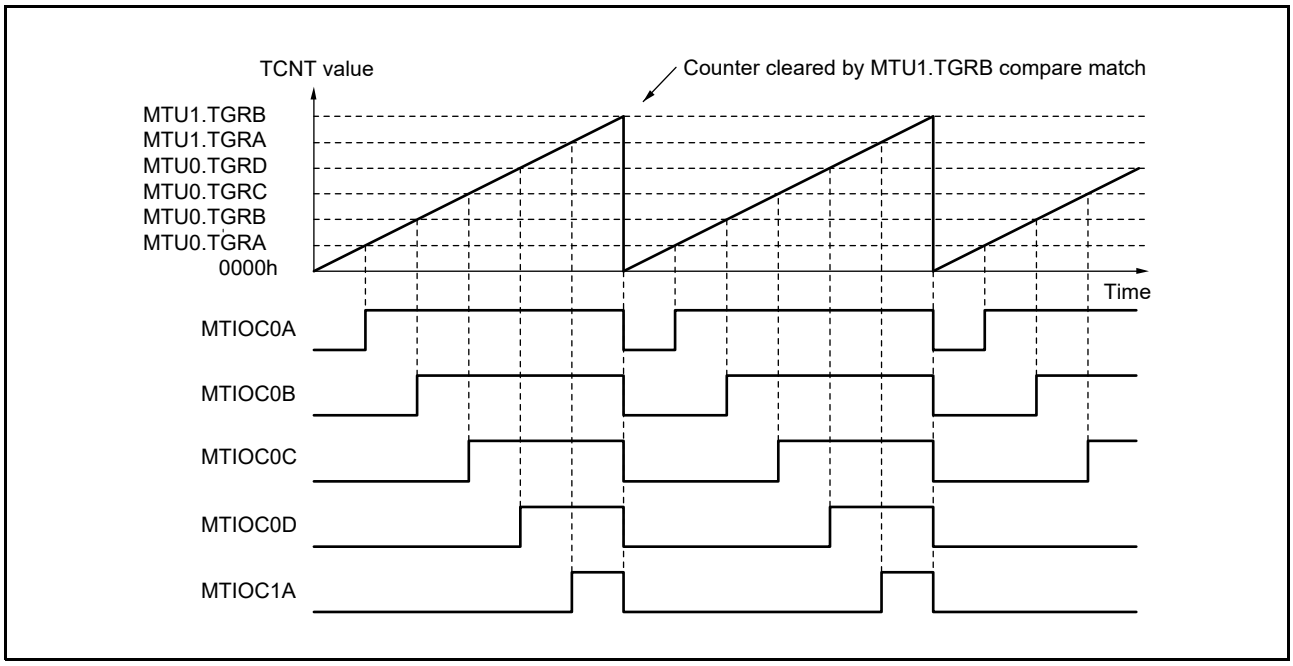

Figure 22.27 Example of PWM Mode Operation

Figure 22.28 shows examples of PWM waveform output with 0% duty and 100% duty in PWM mode 1.
In this example, TGRA compare match is set as the TCNT clearing source, a low level is set as the initial output value and output value for the TGRA register, and a high level is set as the output value for the TGRB register.

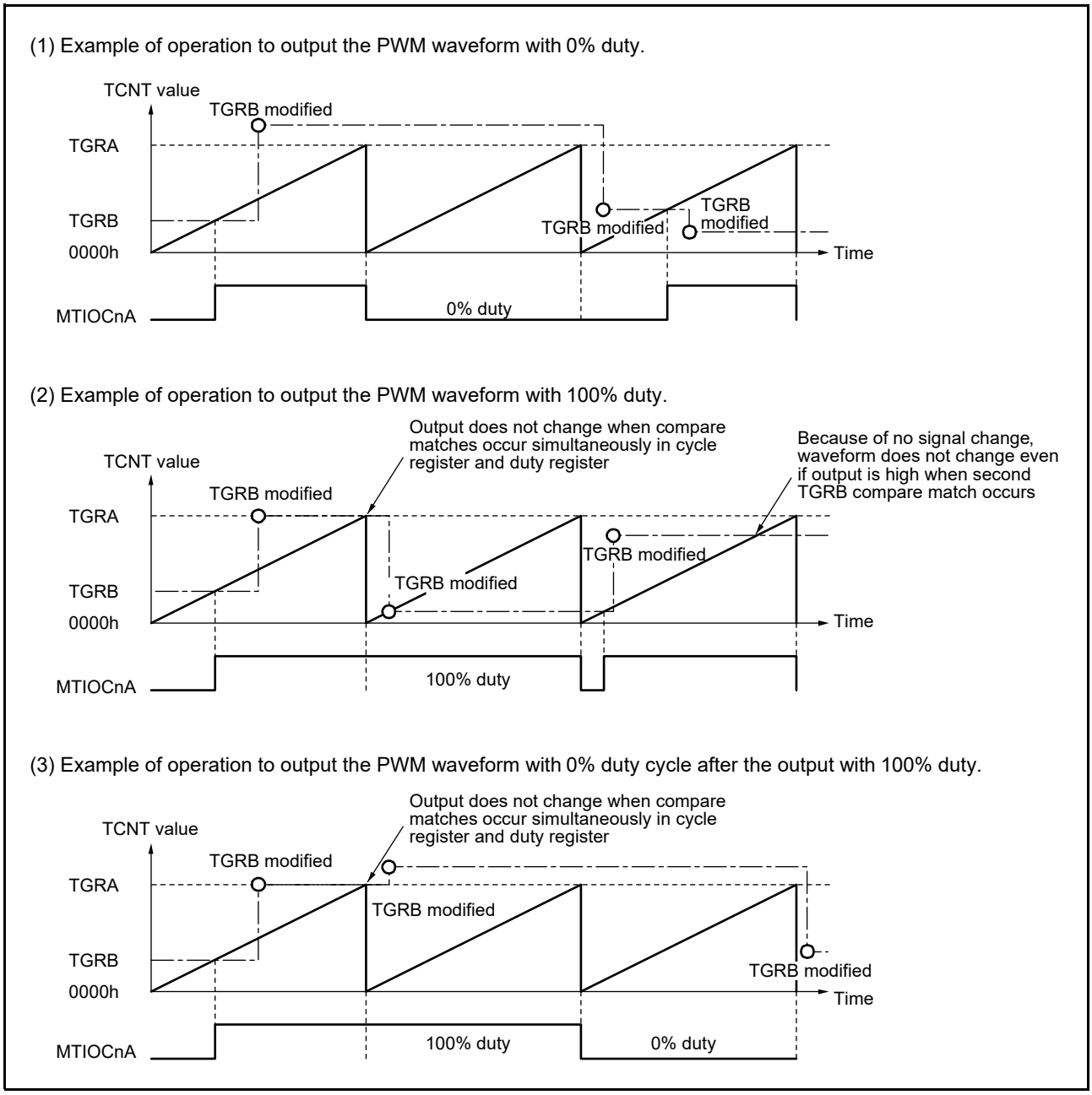

Figure 22.28 Examples of PWM Mode Operation (PWM Waveform Output with 0% Duty and 100% Duty) (n = 0 to 4)

22.3.6 Phase Counting Mode

When phase counting mode is specified, an external clock is selected as the count clock and the TCNT counter operates as an up-counter/down-counter regardless of the setting of the TCR.TPSC[2:0] bits and TCR.CKEG[1:0] bits. However, the functions of the TCR.CCLR[2:0] bits and of registers TIOR, TIER, and TGR are valid, and input capture/compare match and interrupt functions can be used.
This can be used for 2-phase encoder pulse input.
If an overflow occurs while the TCNT counter is counting up, a TCIV interrupt is generated while the corresponding TIER.TCIEV bit is 1. If an underflow occurs while the TCNT counter is counting down, a TCIU interrupt is generated while the corresponding TIER.TCIEU bit is 1.
The TSR.TCFD flag is the count direction flag. Read the TCFD flag to check whether the TCNT counter is counting up or down.
In phase counting mode, the external clock pins MTCLKA, MTCLKB, MTCLKC, and MTCLKD can be used as 2-phase encoder pulse input pins. Table 22.47 lists the correspondence between external clock pins and channels.

Table 22.47 Clock Input Pins in Phase Counting Mode

	External Clock Input Pins	
Channel	**A-Phase**	**B-Phase**
MTU1	MTCLKA	MTCLKB
MTU2	MTCLKC	MTCLKD

(1) Example of Phase Counting Mode Setting Procedure

Figure 22.29 shows an example of the phase counting mode setting procedure.

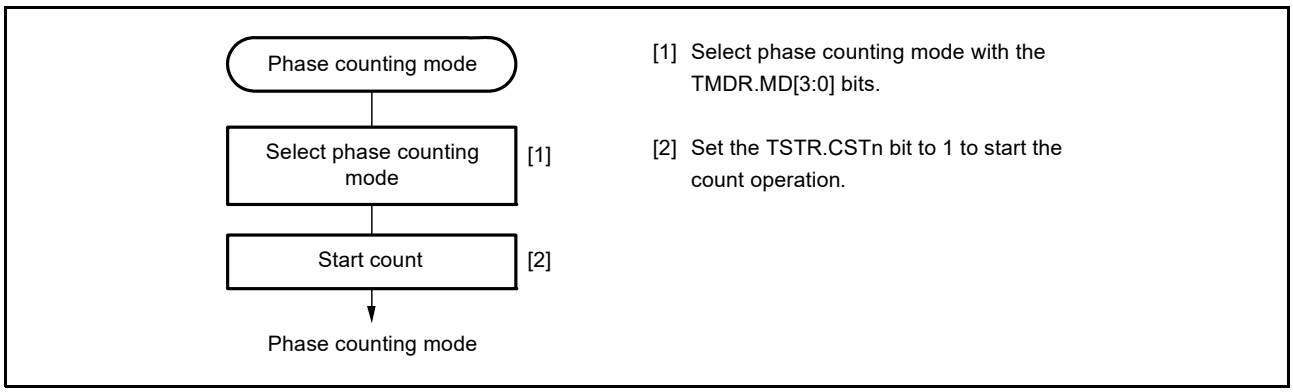

Figure 22.29 Example of Phase Counting Mode Setting Procedure

(2) Examples of Phase Counting Mode Operation

In phase counting mode, the TCNT counter is incremented or decremented according to the phase difference between two external clocks. There are four modes according to the count conditions.

(a) Phase Counting Mode 1

Figure 22.30 shows an example of operation in phase counting mode 1, and Table 22.48 lists the TCNT up-counting and down-counting conditions.

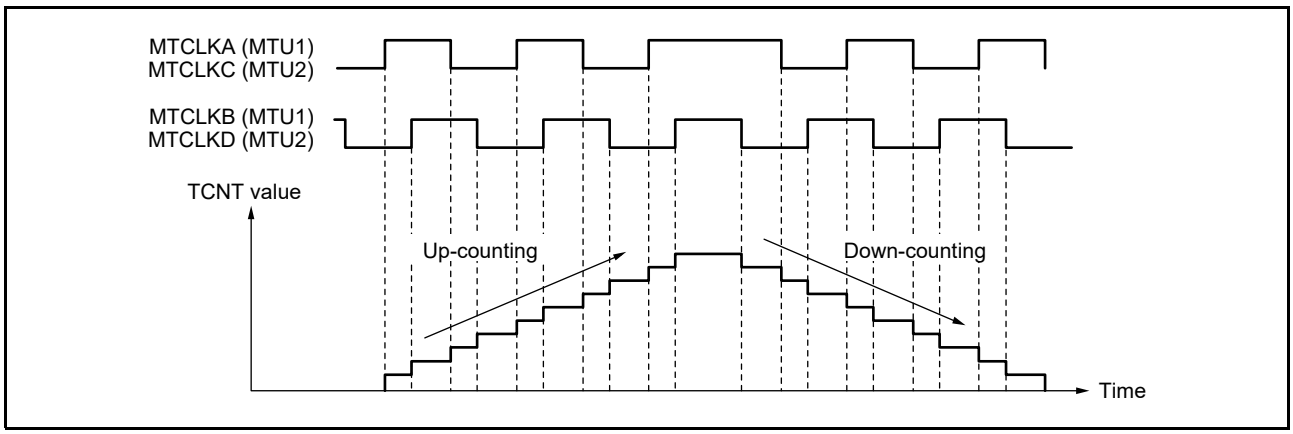

Figure 22.30 Example of Operation in Phase Counting Mode 1

Table 22.48 Up-Counting and Down-Counting Conditions in Phase Counting Mode 1

MTCLKA (MTU1) MTCLKC (MTU2)	MTCLKB (MTU1) MTCLKD (MTU2)	Operation
High	↑	Up-counting
Low	↓	
↑	Low	
↓	High	
High	↓	Down-counting
Low	↑	
↑	High	
↓	Low	

↑ : Rising edge

↓ : Falling edge

(b) Phase Counting Mode 2

Figure 22.31 shows an example of operation in phase counting mode 2, and Table 22.49 lists the TCNT up-counting and down-counting conditions.

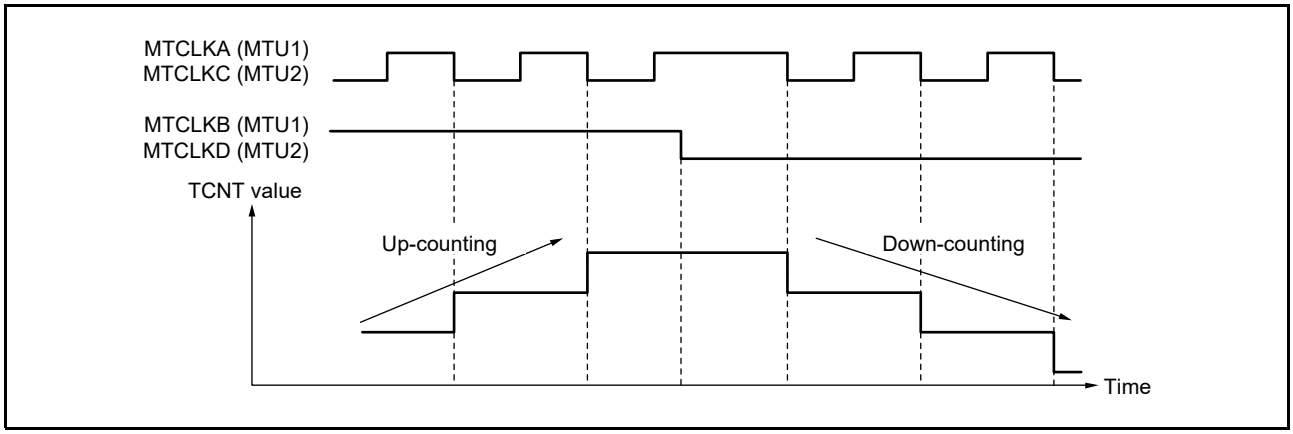

Figure 22.31 Example of Operation in Phase Counting Mode 2

Table 22.49 Up-Counting and Down-Counting Conditions in Phase Counting Mode 2

MTCLKA (MTU1) MTCLKC (MTU2)	MTCLKB (MTU1) MTCLKD (MTU2)	Operation
High	↑	None (Don’t care)
Low	↓	None (Don’t care)
↑	Low	None (Don’t care)
↓	High	Up-counting
High	↓	None (Don’t care)
Low	↑	None (Don’t care)
↑	High	None (Don’t care)
↓	Low	Down-counting

↑ : Rising edge

↓ : Falling edge

(c) Phase Counting Mode 3

Figure 22.32 shows an example of operation in phase counting mode 3, and Table 22.50 lists the TCNT up-counting and down-counting conditions.

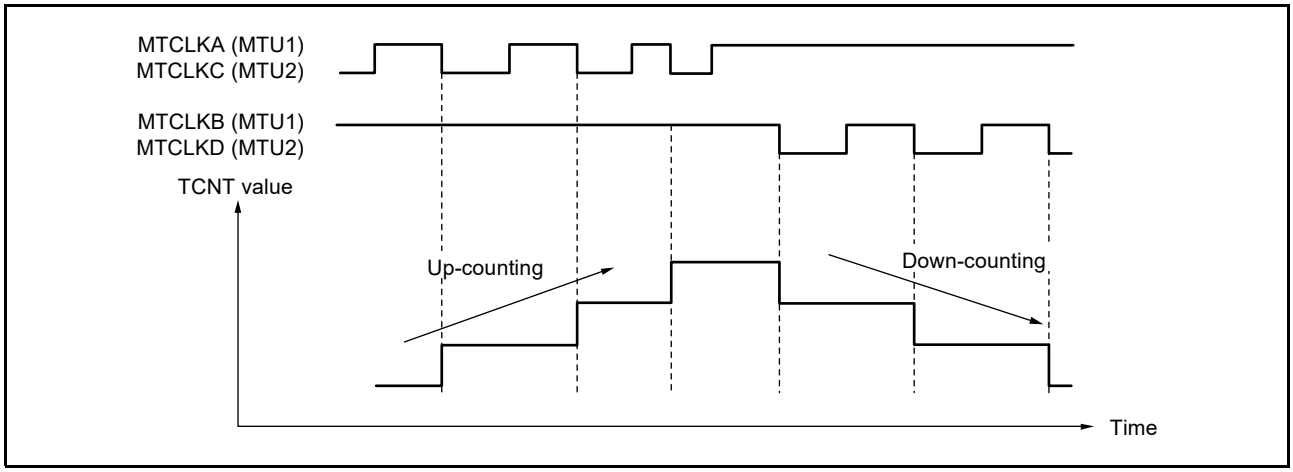

Figure 22.32 Example of Operation in Phase Counting Mode 3

Table 22.50 Up-Counting and Down-Counting Conditions in Phase Counting Mode 3

MTCLKA (MTU1) MTCLKC (MTU2)	MTCLKB (MTU1) MTCLKD (MTU2)	Operation
High	↑	None (Don’t care)
Low	↓	None (Don’t care)
↑	Low	None (Don’t care)
↓	High	Up-counting
High	↓	Down-counting
Low	↑	None (Don’t care)
↑	High	None (Don’t care)
↓	Low	None (Don’t care)

↑ : Rising edge

↓ : Falling edge

(d) Phase Counting Mode 4

Figure 22.33 shows an example of operation in phase counting mode 4, and Table 22.51 lists the TCNT up-counting and down-counting conditions.

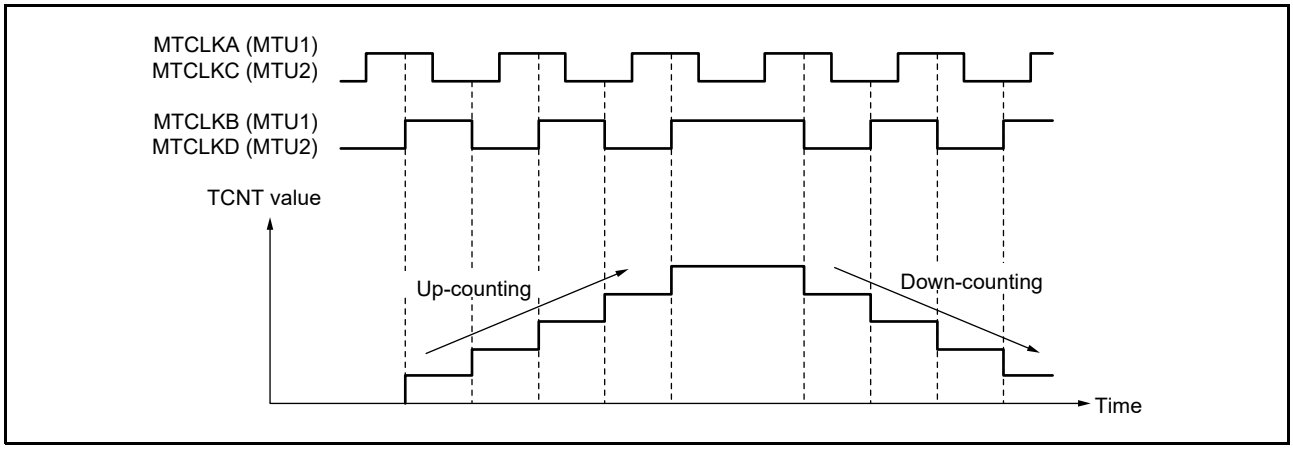

Figure 22.33 Example of Operation in Phase Counting Mode 4

Table 22.51 Up-Counting and Down-Counting Conditions in Phase Counting Mode 4

MTCLKA (MTU1) MTCLKC (MTU2)	MTCLKB (MTU1) MTCLKD (MTU2)	Operation
High	↑	Up-counting
Low	↓	
↑	Low	None (Don't care)
↓	High	
High	↓	Down-counting
Low	↑	
↑	High	None (Don't care)
↓	Low	

↑ : Rising edge

↓ : Falling edge

(3) Phase Counting Mode Application Example

Figure 22.34 shows an example in which MTU1 is in phase counting mode, and MTU1 is coupled with MTU0 to input 2-phase encoder pulses of a servo motor in order to detect position or speed.

MTU1 is set to phase counting mode 1, and the encoder pulse A-phase and B-phase are input to MTCLKA and MTCLKB.

MTU0.TGRC compare match is specified as the MTU0.TCNT clearing source and registers MTU0.TGRA and MTU0.TGRC are used for the compare match function and are set with the speed control cycle and position control cycle. The MTU0.TGRB register is used for input capture, with registers MTU0.TGRB and MTU0.TGRD operating in buffer mode. The MTU1 count clock is designated as the MTU0.TGRB input capture source, and the widths of 2-phase encoder 4-multiplication pulses are detected.

Registers MTU1.TGRA and MTU1.TGRB are designated for the input capture function and the MTU0.TGRA and MTU0.TGRC compare matches are selected as the input capture sources to store the up-counter/down-counter values for the control cycles.

This procedure enables the accurate detection of position and speed.

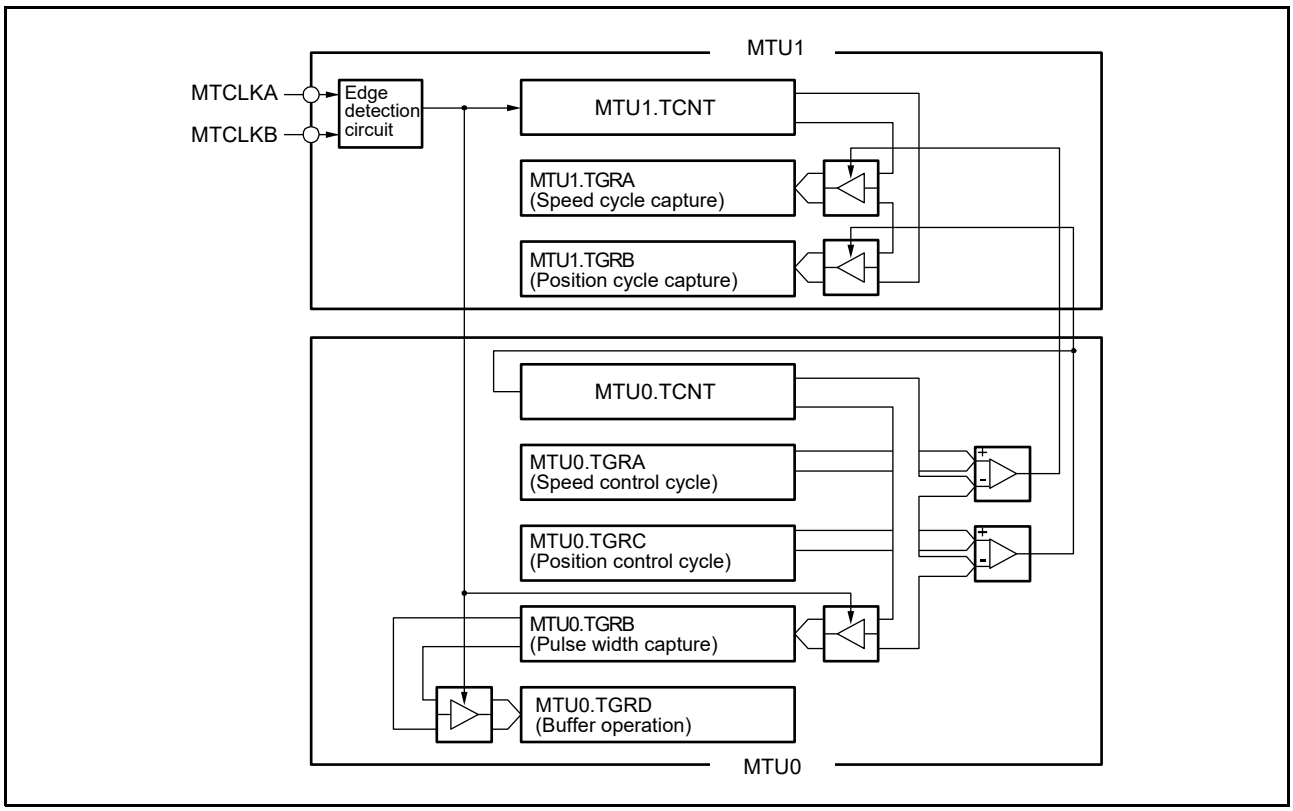

Figure 22.34 Phase Counting Mode Application Example

22.3.7 Reset-Synchronized PWM Mode

In the reset-synchronized PWM mode, six phases of positive and negative PWM waveforms that share a common wave transition point can be output by combining MTU3 and MTU4.
When set for reset-synchronized PWM mode, the MTIOC3B, MTIOC3D, MTIOC4A, MTIOC4C, MTIOC4B, and MTIOC4D pins function as PWM output pins and the MTU3.TCNT counter functions as an up-counter.
Table 22.52 lists the PWM output pins. Table 22.53 lists the settings of the registers.

Table 22.52 Output Pins for Reset-Synchronized PWM Mode

Channel	Output Pin	Description
MTU3	MTIOC3A	Toggle output synchronized with PWM period (or I/O port)
	MTIOC3B	PWM output pin 1
	MTIOC3D	PWM output pin 1’ (negative-phase waveform of PWM output 1)
MTU4	MTIOC4A	PWM output pin 2
	MTIOC4C	PWM output pin 2’ (negative-phase waveform of PWM output 2)
	MTIOC4B	PWM output pin 3
	MTIOC4D	PWM output pin 3’ (negative-phase waveform of PWM output 3)

Table 22.53 Register Settings for Reset-Synchronized PWM Mode

Register	Setting
MTU3.TCNT	Initial setting (0000h)
MTU4.TCNT	Initial setting (0000h)
MTU3.TGRA	Set the count cycle for MTU3.TCNT
MTU3.TGRB	Set the transition point of the PWM waveform to be output from the MTIOC3B and MTIOC3D pins
MTU4.TGRA	Set the transition point of the PWM waveform to be output from the MTIOC4A and MTIOC4C pins
MTU4.TGRB	Set the transition point of the PWM waveform to be output from the MTIOC4B and MTIOC4D pins

(1) Example of Procedure for Setting Reset-Synchronized PWM Mode

Figure 22.35 shows an example of procedure for setting the reset-synchronized PWM mode.

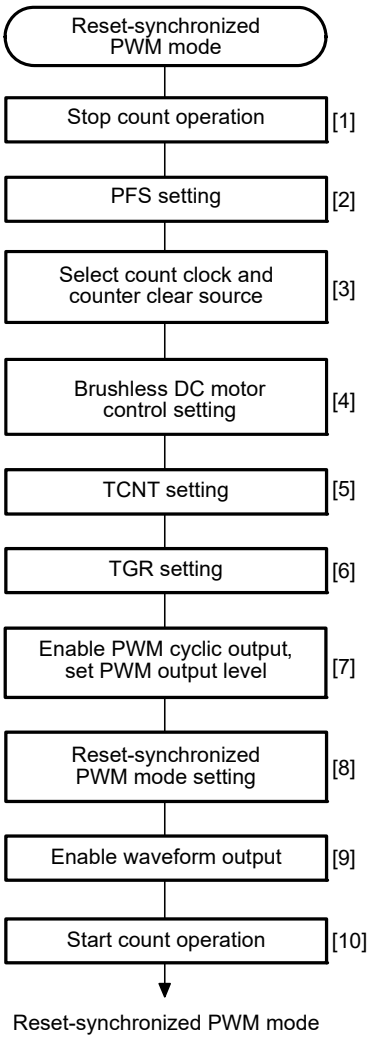

[1] Set the CST3 and CST4 bits in the TSTR register to 0 to stop the TCNT operation. Specify the reset-synchronized PWM mode while MTU3.TCNT and MTU4.TCNT are stopped.

[2] Set the Pmn pin function control register and the port I/O register.

[3] Set bits TPSC[2:0] and CKEG[1:0] in the MTU3.TCR register to select the count clock source and clock edge for MTU3. Set the MTU3.TCR.CCLR[2:0] bits to select TGRA compare-match as a counter clear source.

[4] When performing brushless DC motor control, set the TGCR.BDC bit and set the feedback signal input source and output chopping or gate signal direct output.

[5] Set counters MTU3.TCNT and MTU4.TCNT to 0000h.

[6] The MTU3.TGRA register is the cycle register. Set the waveform cycle value in the MTU3.TGRA register. Set the transition timing of the PWM output waveforms in registers MTU3.TGRB, MTU4.TGRA, and MTU4.TGRB. Set times within the compare match range of the MTU3.TCNT counter.

X ≤ MTU3.TGRA (X: Setting value)

[7] Enable or disable toggle output synchronized with the PWM cycle using the TOCR1.PSYE bit, and set the PWM output level with bits OLSP and OLSN. When specifying the PWM output Level. In buffer operation of registers TOCR2 and TOLBR, refer to Figure 22.3.

[8] Set the MTU3.TMDR.MD[3:0] bits to 1000b to select the reset-synchronized PWM mode. Set the BFA bit to 1 for buffer operation of registers TGRA and TGRC, and the BFB bit to 1 for buffer operation of registers TGRB and TGRD, if necessary.
Set the initial value in the MTU4.TMDR register.

[9] Set the enabling/disabling of the PWM waveform output pin in the TOER register.

[10] Set the TSTR.CST3 bit to 1 to start the count operation.

Note: The output waveform starts to toggle at the point of MTU3.TCNT = MTU3.TGRA = X by setting X = MTU3.TGRA, i.e., cycle = duty cycle.

Figure 22.35 Procedure for Selecting Reset-Synchronized PWM Mode

(2) Example of Reset-Synchronized PWM Mode Operation

Figure 22.36 shows an example of operation in the reset-synchronized PWM mode.
Counters MTU3.TCNT and MTU4.TCNT operate as up-counters. The counters are cleared when a compare match occurs between the MTU3.TCNT counter and the MTU3.TGRA register, and then begin incrementing from 0000h. The output from the PWM pins toggles every time a compare match occurs in registers MTU3.TGRB, MTU4.TGRA, and MTU4.TGRB and the counters are cleared.

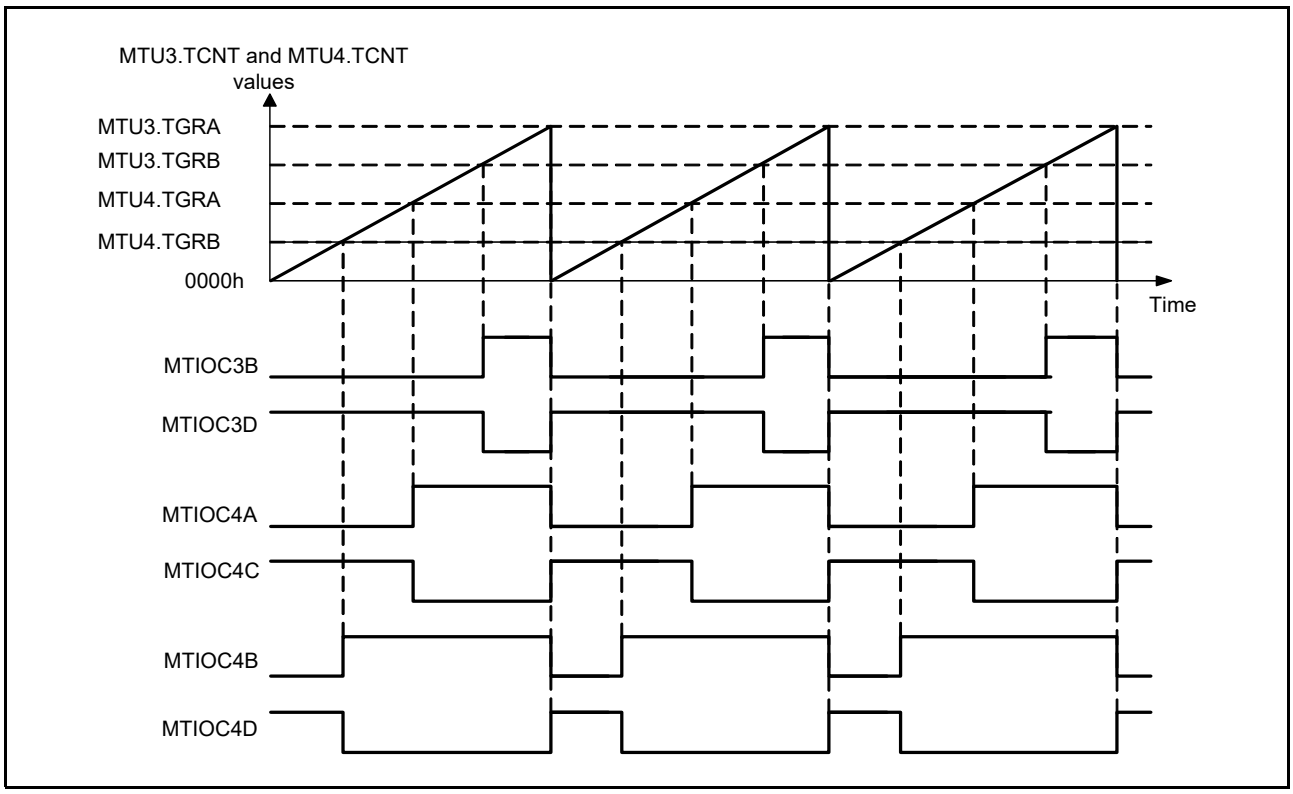

Figure 22.36 Example of Reset-Synchronized PWM Mode Operation (When TOCR1.OLSN = 1 and OLSP = 1)

22.3.8 Complementary PWM Mode

In complementary PWM mode, dead time can be set for PWM waveforms to be output. The dead time is the period during which the upper and lower arm transistors are set to the inactive level in order to prevent short-circuiting of the arms. Six phases of positive and negative PWM waveforms with dead time can be output by combining MTU3 and MTU4. PWM waveforms without dead time can also be output.
In complementary PWM mode, MTIOC3B, MTIOC3D, MTIOC4A, MTIOC4B, MTIOC4C, and MTIOC4D pins function as PWM output pins, and the MTIOC3A pin can be set for toggle output synchronized with the PWM cycle.
Counters MTU3.TCNT and MTU4.TCNT function as up/down-counters.
Table 22.54 lists the PWM output pins used. Table 22.55 lists the settings of the registers used.
A function to directly cut off the PWM output by using an external signal is supported as a port function.

Table 22.54 Output Pins for Complementary PWM Mode

Channel	Output Pin	Description
MTU3	MTIOC3A	Toggle output synchronized with PWM cycle (or I/O port)
	MTIOC3B	PWM output pin 1
	MTIOC3C	I/O port*1
	MTIOC3D	PWM output pin 1' (negative-phase waveform output of PWM output 1)
MTU4	MTIOC4A	PWM output pin 2
	MTIOC4C	PWM output pin 2' (negative-phase waveform output of PWM output 2)
	MTIOC4B	PWM output pin 3
	MTIOC4D	PWM output pin 3' (negative-phase waveform output of PWM output 3)

Note 1. Avoid setting the MTIOC3C pin as a timer I/O pin in complementary PWM mode.

Table 22.55 Register Settings for Complementary PWM Mode

Channel	Counter/ Register	Description	Read/Write from CPU
MTU3	MTU3.TCNT	Starts up-counting from the value set in the dead time register	Maskable by TRWER setting*1
	MTU3.TGRA	Set MTU3.TCNT upper limit value (1/2 carrier cycle + dead time)	Maskable by TRWER setting*1
	MTU3.TGRB	PWM output 1 compare register	Maskable by TRWER setting*1
	MTU3.TGRC	MTU3.TGRA buffer register	Readable/writable
	MTU3.TGRD	PWM output 1/MTU3.TGRB buffer register	Readable/writable
MTU4	MTU4.TCNT	Starts up-counting after being initialized to 0000h	Maskable by TRWER setting*1
	MTU4.TGRA	PWM output 2 compare register	Maskable by TRWER setting*1
	MTU4.TGRB	PWM output 3 compare register	Maskable by TRWER setting*1
	MTU4.TGRC	PWM output 2/MTU4.TGRA buffer register	Readable/writable
	MTU4.TGRD	PWM output 3/MTU4.TGRB buffer register	Readable/writable
Timer dead time data register (TDDR)		Set MTU4.TCNT and MTU3.TCNT offset value (dead time value)	Maskable by TRWER setting*1
Timer cycle data register (TCDR)		Set MTU4.TCNT upper limit value (1/2 carrier cycle)	Maskable by TRWER setting*1
Timer cycle buffer register (TCBR)		TCDR buffer register	Readable/writable
Subcounter (TCNTS)		Subcounter for dead time generation	Read-only
Temporary register 1 (TEMP1)		PWM output 1/MTU3.TGRB temporary register	Not readable/writable
Temporary register 2 (TEMP2)		PWM output 2/MTU4.TGRA temporary register	Not readable/writable
Temporary register 3 (TEMP3)		PWM output 3/MTU4.TGRB temporary register	Not readable/writable

Note 1. Access can be enabled or disabled according to the setting in the TRWER register (timer read/write enable register).

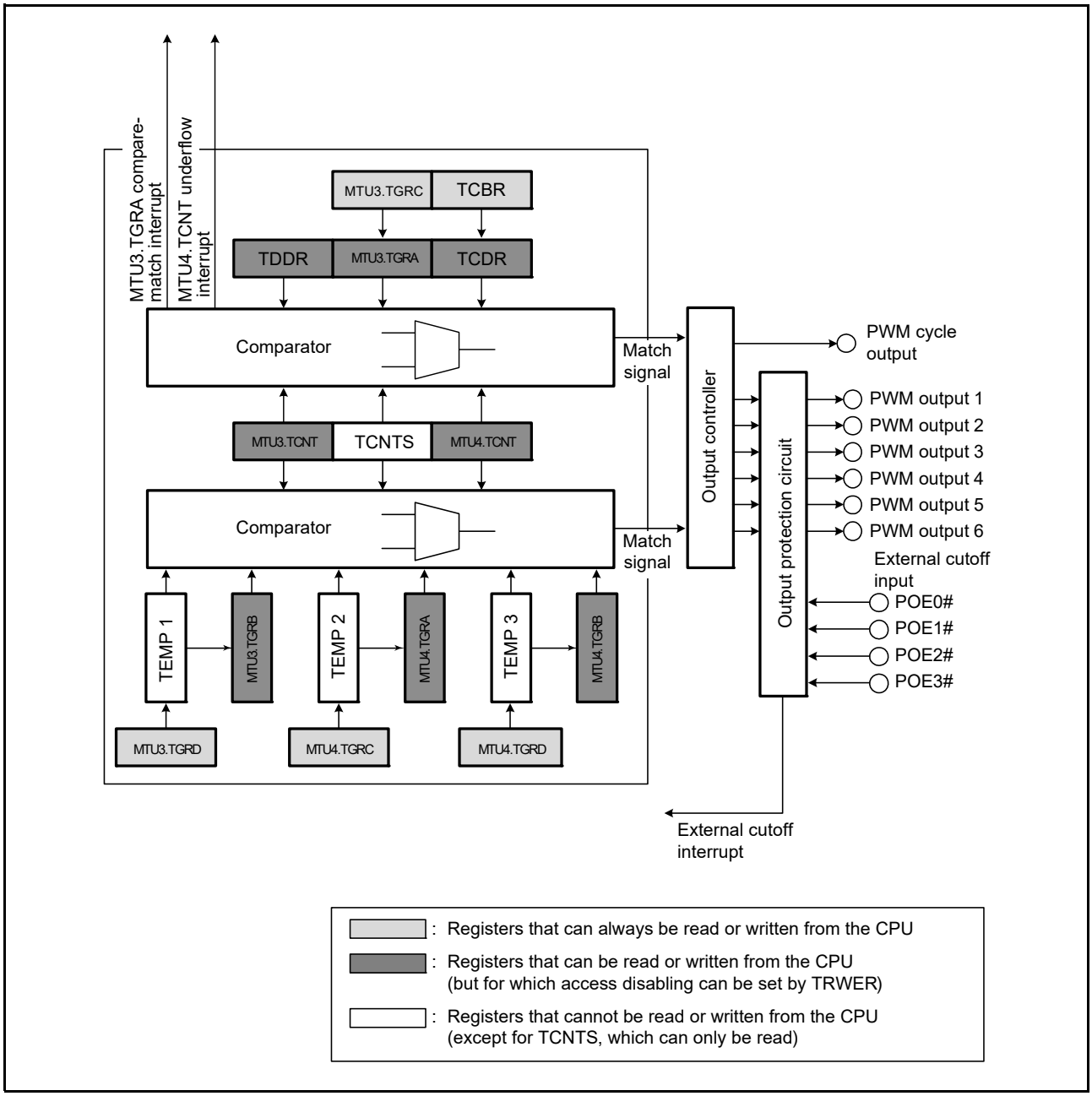

Figure 22.37 Block Diagram of MTU3 and MTU4 in Complementary PWM Mode

(1) Example of Complementary PWM Mode Setting Procedure

Figure 22.38 shows an example of the complementary PWM mode setting procedure.

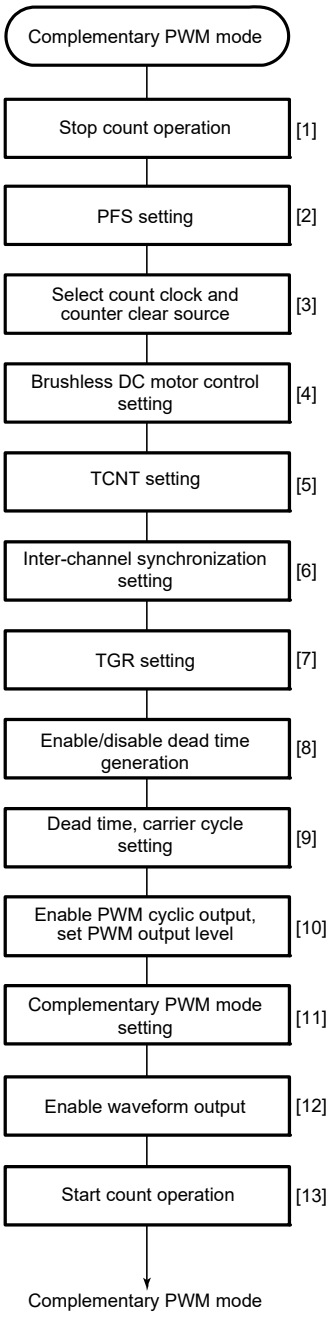

[1] Set bits CST3 and CST4 in the TSTR register to 0 to stop TCNT operation. Specify complementary PWM mode while counters MTU3.TCNT and MTU4.TCNT are stopped.

[2] Set the Pmn pin function control register and the port I/O register.

[3] Set the same count clock source and clock edge for MTU3 and MTU4 with bits TPSC[2:0] and bits CKEG[1:0] in the TCR register. Use the CCLR[2:0] bits to set synchronous clearing only when restarting by synchronous clearing with another channel during complementary PWM mode operation.

[4] When performing brushless DC motor control, set TGCR.BDC bit and set the feedback signal input source and output chopping or gate signal direct output.

[5] Set the dead time in the MTU3.TCNT counter. Set the MTU4.TCNT counter to 0000h.

[6] Set only when restarting by synchronous clearing with another channel during complementary PWM mode operation. In this case, synchronize the channel generating the synchronous clear with MTU3 and MTU4 using the TSYR register.

[7] Set the output PWM duty cycles in the compare registers (MTU3.TGRB, MTU4.TGRA, and MTU4.TGRB) and buffer registers (MTU3.TGRD, MTU4.TGRC, and MTU4.TGRD). Set the same value in the buffer registers and the compare registers.

[8] This setting is necessary only when no dead time should be generated. Make appropriate settings in the TDER register so that no dead time is generated.

[9] Set the dead time in the TDDR register, 1/2 the carrier cycle in the TCDR register and TCBR register, and 1/2 the carrier cycle plus the dead time in registers MTU3.TGRA and MTU3.TGRC. When no dead time generation is selected, set 1 in the TDDR register and 1/2 the carrier cycle + 1 in registers MTU3.TGRA and MTU3.TGRC.

[10] Enable or disable toggle output synchronized with the TOCR1.PSYE bit, and set the PWM output level with bits OLSP and OLSN.
When specifying the PWM output level by using the TOLBR register as a buffer for the MTU.TOCR2 register, refer to Figure 22.3, Example of PWM Output Level Setting Procedure in Buffer Operation.

[11] Select complementary PWM mode in the MTU3.TMDR register. Set the BFA bit to 1 for buffer operation of registers TGRA and TGRC, and the BFB bit to 1 for buffer operation of registers TGRB and TGRD, if necessary. Do not set the MTU4.TMDR register.

[12] Set enabling/disabling of PWM waveform output pin output in the TOER register.

[13] Set bits CST3 and CST4 in the TSTR register to 1 simultaneously to start the count operation.

Figure 22.38 Example of Complementary PWM Mode Setting Procedure

(2) Outline of Complementary PWM Mode Operation

In complementary PWM mode, six phases (three positive and three negative) of PWM waveforms can be output. Figure 22.39 illustrates counter operation in complementary PWM mode, and Figure 22.40 shows an example of operation in complementary PWM mode.

(a) Counter Operation

In complementary PWM mode, three counters —MTU3.TCNT, MTU4.TCNT, and TCNTS— perform up-/down-count operations.

The MTU3.TCNT counter is automatically initialized to the value set in the TDDR register when complementary PWM mode is selected and the TSTR.CST3 bit is 0.

When the CST3 bit is set to 1, the MTU3.TCNT counter counts up to the value set in the MTU3.TGRA register, then switches to down-counting when it matches the MTU3.TGRA register. When the MTU3.TCNT value matches the TDDR register, the counter switches to up-counting, and the operation is repeated in this way.

The MTU4.TCNT counter should be initialized to 0000h.

When the CST4 bit is set to 1, the MTU4.TCNT counter counts up in synchronization with the MTU3.TCNT counter, and switches to down-counting when it matches the TCDR register. On reaching 0000h, the MTU4.TCNT counter switches to up-counting, and the operation is repeated in this way.

The TCNTS counter is a read-only counter. It does not need to be initialized.

When the MTU3.TCNT counter matches the TCDR register during up-/down-counting of the TCNT counter in MTU3 and MTU4, the TCNTS counter starts down-counting, and when the TCNTS counter matches the TCDR register, the operation switches to up-counting. When the TCNTS counter matches the MTU3.TGRA register, it becomes 0000h.

When the MTU4.TCNT counter matches the TDDR register during down-counting of counters MTU3.TCNT and MTU4.TCNT, the TCNTS counter starts up-counting, and when the TCNTS counter matches the TDDR register, the operation switches to down-counting. When the TCNTS counter reaches 0000h, it is set with the value in the MTU3.TGRA register.

The TCNTS counter is compared with the compare register and temporary register, in which the PWM duty is specified, only during the count operation.

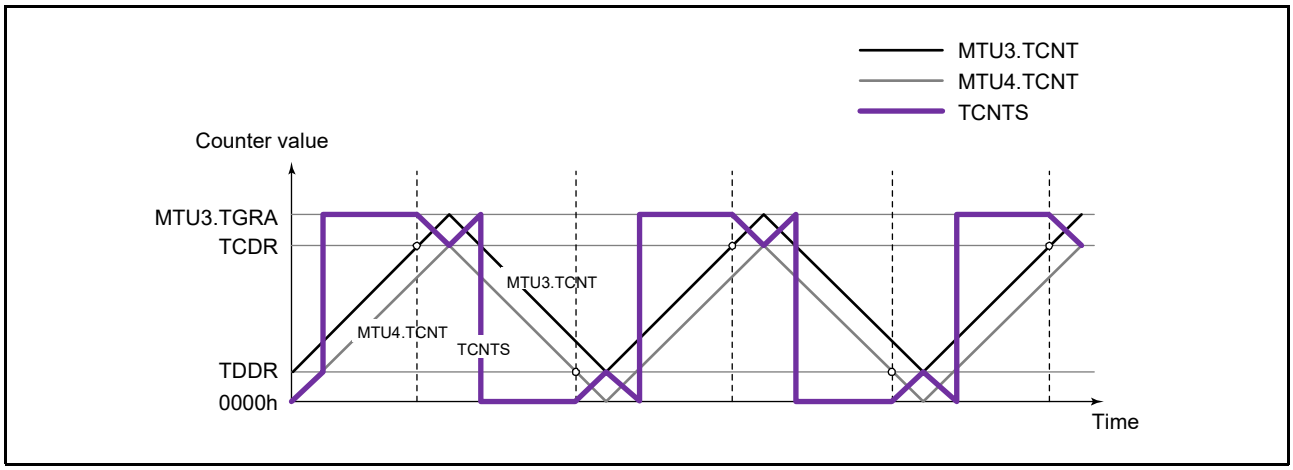

Figure 22.39 Counter Operation in Complementary PWM Mode

(b) Register Operation

In complementary PWM mode, nine registers (compare registers, buffer registers, and temporary registers) are used to control the duty ratio for the PWM output. Figure 22.40 shows an example of operation in complementary PWM mode. Registers MTU3.TGRB, MTU4.TGRA, and MTU4.TGRB are constantly compared with the counters to generate PWM waveforms. When these registers match the counter, the value set in the TOCR1.OLSN and OLSP bits is output from the PWM output pin.

Registers MTU3.TGRD, MTU4.TGRC, and MTU4.TGRD are buffer registers for these compare registers. Between a buffer register and a compare register, there is a temporary register. The temporary registers cannot be accessed by the CPU.

Data in a compare register can be changed by writing new data to the corresponding buffer register. The buffer registers can be read or written at any time.

When modifying data in a buffer register, be sure to write to the MTU4.TGRD register last and enable data transfer from the buffer register to a temporary register. At this time, transfer from registers TCBR and MTU3.TGRC, which operate as buffer registers for the timer cycle registers, to temporary registers is also enabled. Data is transferred to all five temporary registers at the same time. When transfer is enabled in the Ta interval, data written to a buffer register is immediately transferred to the temporary register. Data is not transferred to the temporary register in the Tb1 and Tb2 intervals. Data enabled for transfer in this interval is transferred to the temporary register at the end of this interval.

The value transferred to a temporary register is transferred to the compare register at the end of the Tb1 interval (when matches the MTU3.TGRA register while the TCNTS counter is counting up), or at the end of the Tb2 interval (when matches 0000h while the TCNTS counter is counting down). The timing for transfer from the temporary register to the compare register can be selected with the TMDR.MD[3:0] bits. Figure 22.40 shows an example in which the trough is selected for the transfer timing.

In the Tb (Tb2 in Figure 22.40) interval in which data is not transferred to the temporary register, the temporary register has the same function as the compare register and is compared with the counter. In this interval, therefore, there are two compare match registers for one output phase; the compare register contains the pre-change data and the temporary register contains new data. In this interval, three counters (MTU3.TCNT, MTU4.TCNT and TCNTS) and two registers (compare register and temporary register) are compared, and PWM output is controlled accordingly.

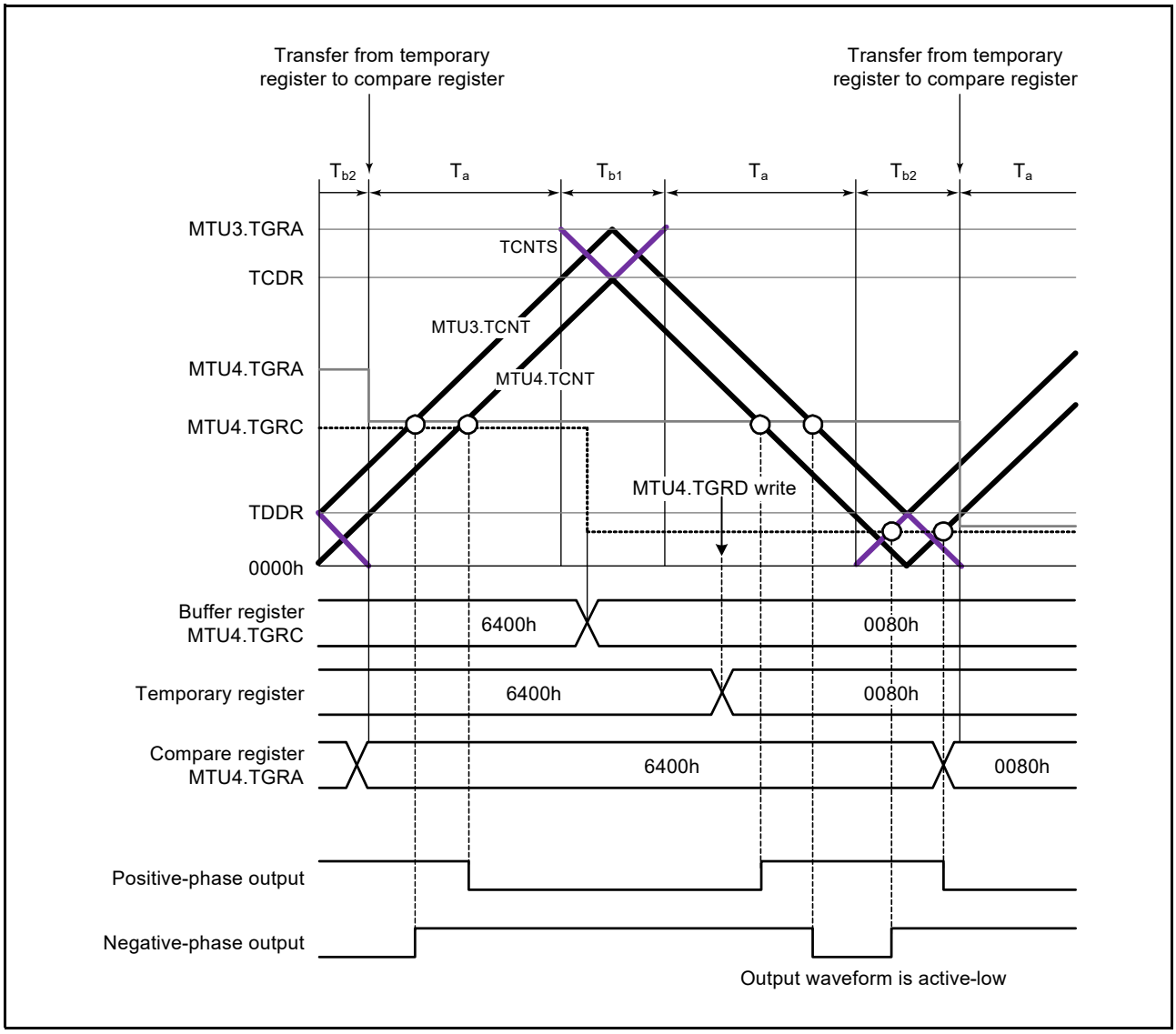

Figure 22.40 Example of Operation in Complementary PWM Mode

(c) Initial Setting

In complementary PWM mode, there are six registers that require initial setting. In addition, there is a register that specifies whether to generate dead time (it should be used only when dead time generation should be disabled).
Before setting complementary PWM mode with the TMDR.MD[3:0] bits, initial values should be set in the following registers.
The MTU3.TGRC register operates as the buffer register for the MTU3.TGRA register, and should be set with 1/2 the PWM cycle + dead time Td. The TCBR register operates as the buffer register for the TCDR register, and should be set with 1/2 the PWM cycle. Set dead time Td in the TDDR register.

When dead time is not needed, the TDER.TDER bit should be set to 0, registers MTU3.TGRC and MTU3.TGRA should be set to 1/2 the PWM cycle + 1, and the TDDR register should be set to 1.
Set the respective initial PWM duty values in three buffer registers MTU3.TGRD, MTU4.TGRC, and MTU4.TGRD.
The values set in the five buffer registers excluding the TDDR register are transferred to the corresponding compare registers as soon as complementary PWM mode is set.
Set the MTU4.TCNT counter to 0000h before setting complementary PWM mode.

Table 22.56 Registers and Counters Requiring Initial Setting

Register and Counter	Setting
MTU3.TGRC	1/2 PWM cycle + dead time Td (1/2 PWM cycle + 1 when dead time generation is disabled by the TDER register)
TDDR	Dead time Td (1 when dead time generation is disabled by the TDER register)
TCBR	1/2 PWM cycle
MTU3.TGRD, MTU4.TGRC, MTU4.TGRD	Initial PWM duty value for each phase
MTU4.TCNT	0000h

Note: The value set in the MTU3.TGRC register should be the sum of 1/2 the PWM cycle set in the TCBR register and dead time Td set in the TDDR register. When dead time generation is disabled by the TDER register, the TGRC register should be set to 1/2 the PWM cycle + 1.

(d) PWM Output Level Setting

In complementary PWM mode, the PWM output level is set with bits OLSN and OLSP in the TOCR1 register or bits OLS1P to OLS3P and OLS1N to OLS3N in the TOCR2 register.
The output level can be set for each of the three positive phases and three negative phases of 6-phase output.
Complementary PWM mode should be cleared before setting or changing output levels.

(e) Dead Time Setting

In complementary PWM mode, dead time can be set for PWM output.
The dead time is set in the TDDR register. The value set in the TDDR register is used as the MTU3.TCNT counter start value and creates a dead time between counters MTU3.TCNT and MTU4.TCNT. Complementary PWM mode should be cleared before changing the contents of the TDDR register.

(f) Dead Time Suppressing

Dead time generation is suppressed by setting the TDER.TDER bit to 0. The TDER bit can be set to 0 only when 0 is written to it after reading it as 1.
Registers MTU3.TGRA and MTU3.TGRC should be set to 1/2 PWM cycle + 1 and the TDDR register should be set to 1.
By the above settings, PWM waveforms without dead time can be obtained. Figure 22.41 shows an example of operation without dead time.

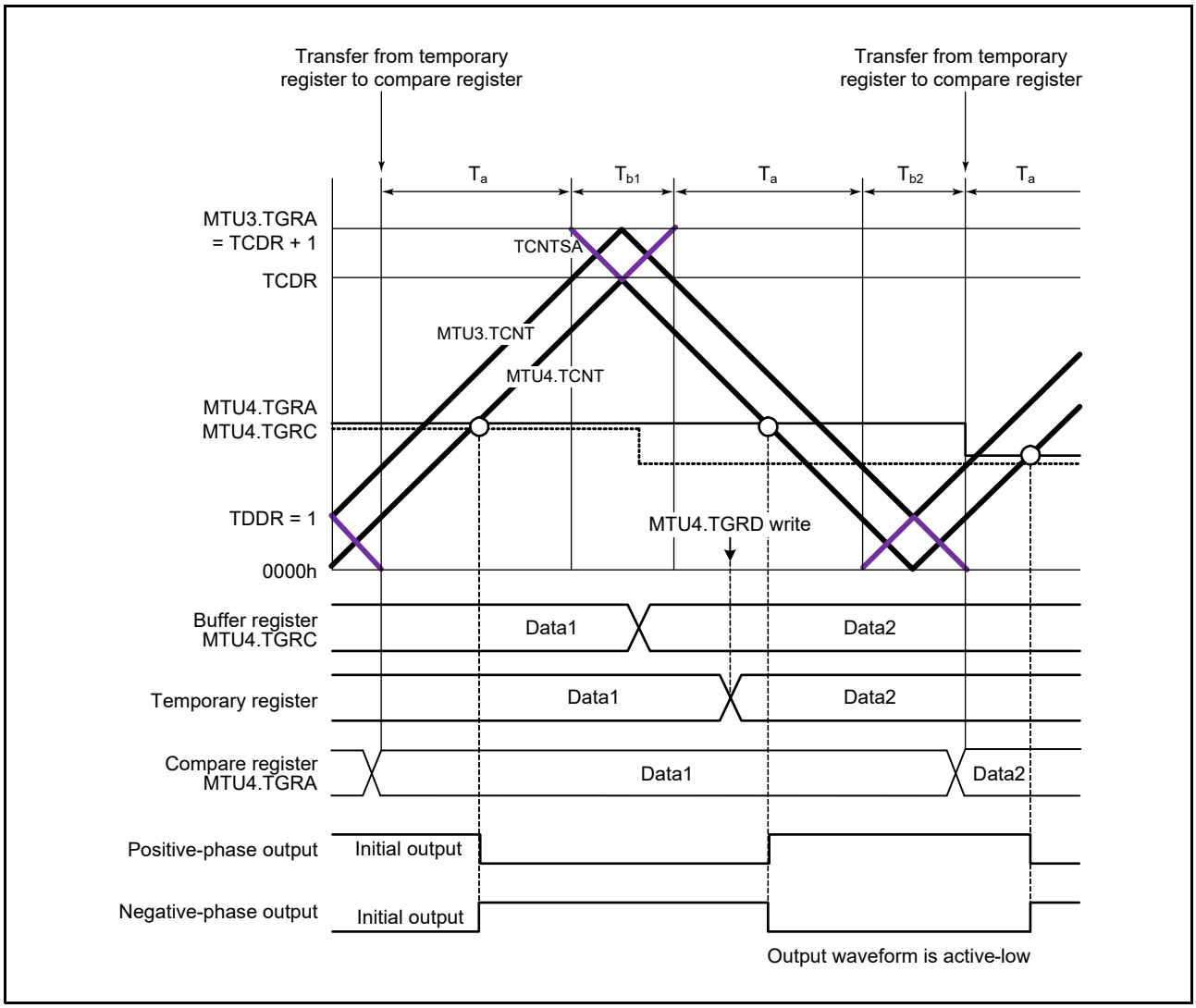

Figure 22.41 Example of Operation without Dead Time

(g) PWM Cycle Setting

In complementary PWM mode, the PWM cycle is set in two registers — the MTU3.TGRA register, in which the MTU3.TCNT counter upper limit value is set, and the TCDR register, in which the MTU4.TCNT counter upper limit value is set. The settings should be made so as to achieve the following relationship between these two registers:

With dead time: MTU3.TGRA setting = TCDR setting + TDDR setting
Without dead time: MTU3.TGRA setting = TCDR setting + 1

The settings should be made so as to achieve the following relationship between registers TCDR and TDDR.
TCDR setting > TDDR setting × 2 + 2

The MTU3.TGRA and TCDR settings are made by setting values in buffer registers MTU3.TGRC and TCBR. When data is written to the MTU4.TGRD register to enable transfers, the values set in registers MTU3.TGRC and TCBR are transferred simultaneously to registers MTU3.TGRA and TCDR with the transfer timing selected with the TMDR.MD[3:0] bits.
The new PWM cycle is reflected from the next cycle when data is updated at the crest, or from the current cycle when updated in the trough. Figure 22.42 illustrates the operation when the PWM cycle is updated at the crest.

Refer to the following section (h) Register Data Updating, for the method of updating the data in each buffer register.

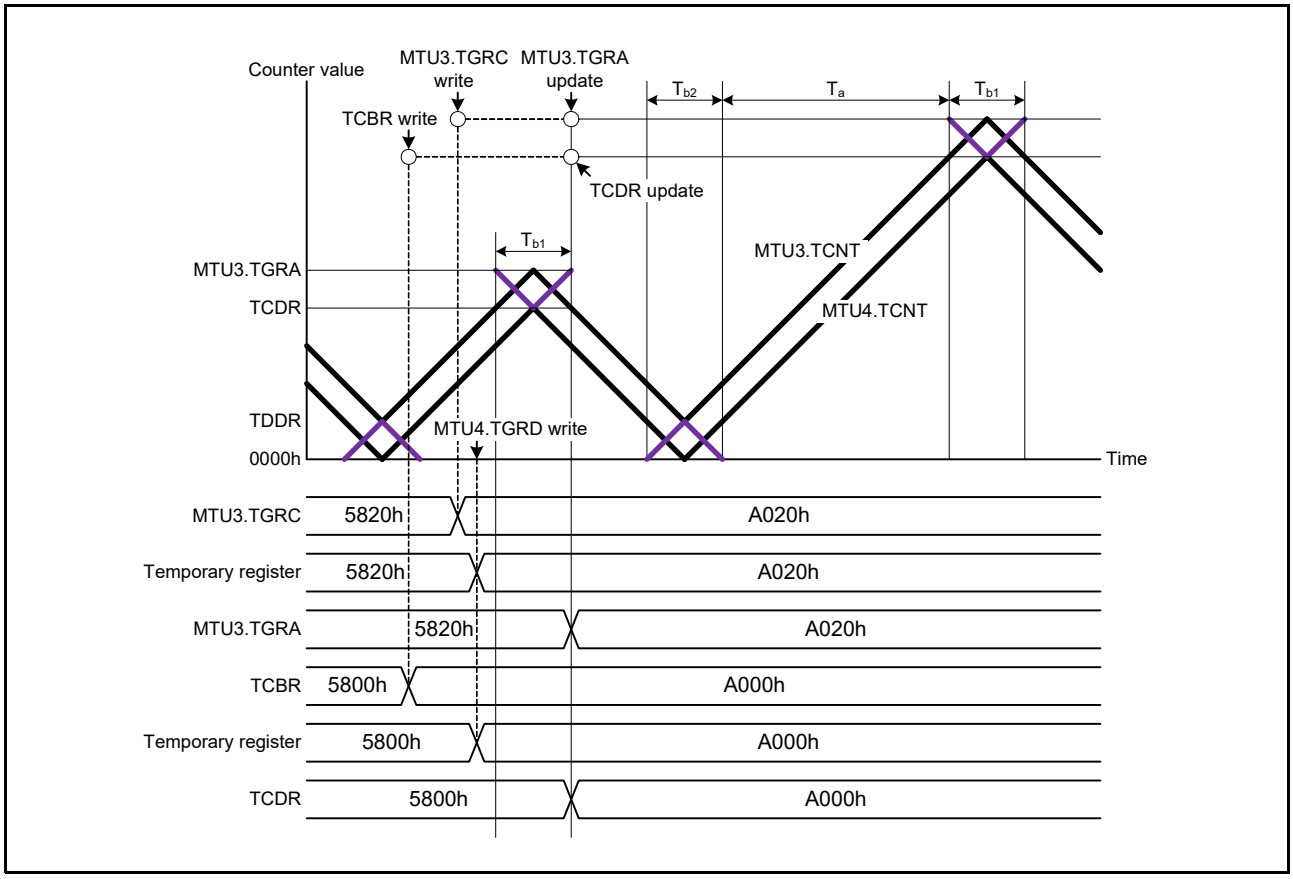

Figure 22.42 Example of PWM Cycle Updating

(h) Register Data Updating

In complementary PWM mode, the buffer register is used to update the data in a compare register. The update data can be written to the buffer register at any time. There are five registers (PWM duty and PWM cycle registers) that have buffer registers and can be updated during operation.

There is a temporary register between each of these registers and its buffer register. While subcounter TCNTS is not counting, if buffer register data is updated, the temporary register value also changes. Data is not transferred from buffer registers to temporary registers while the TCNTS counter is counting; in this case, the value written to a buffer register is transferred after the TCNTS counter halts.

The temporary register value is transferred to the compare register at the data update timing set with the TMDR.MD[3:0] bits. Figure 22.43 shows an example of data updating in complementary PWM mode. This example shows the mode in which data is updated at both the counter crest and trough.

When updating buffer register data, be sure to write to the MTU4.TGRD register at the end of the update. Data is transferred from buffer registers to the temporary registers simultaneously for all five registers after the write to the MTU4.TGRD register.

Even when not updating all five registers or when not updating the MTU4.TGRD data, be sure to write to the MTU4.TGRD register after writing data to the registers to be updated. In this case, the data written to the MTU4.TGRD register should be the same as the data prior to the write operation.

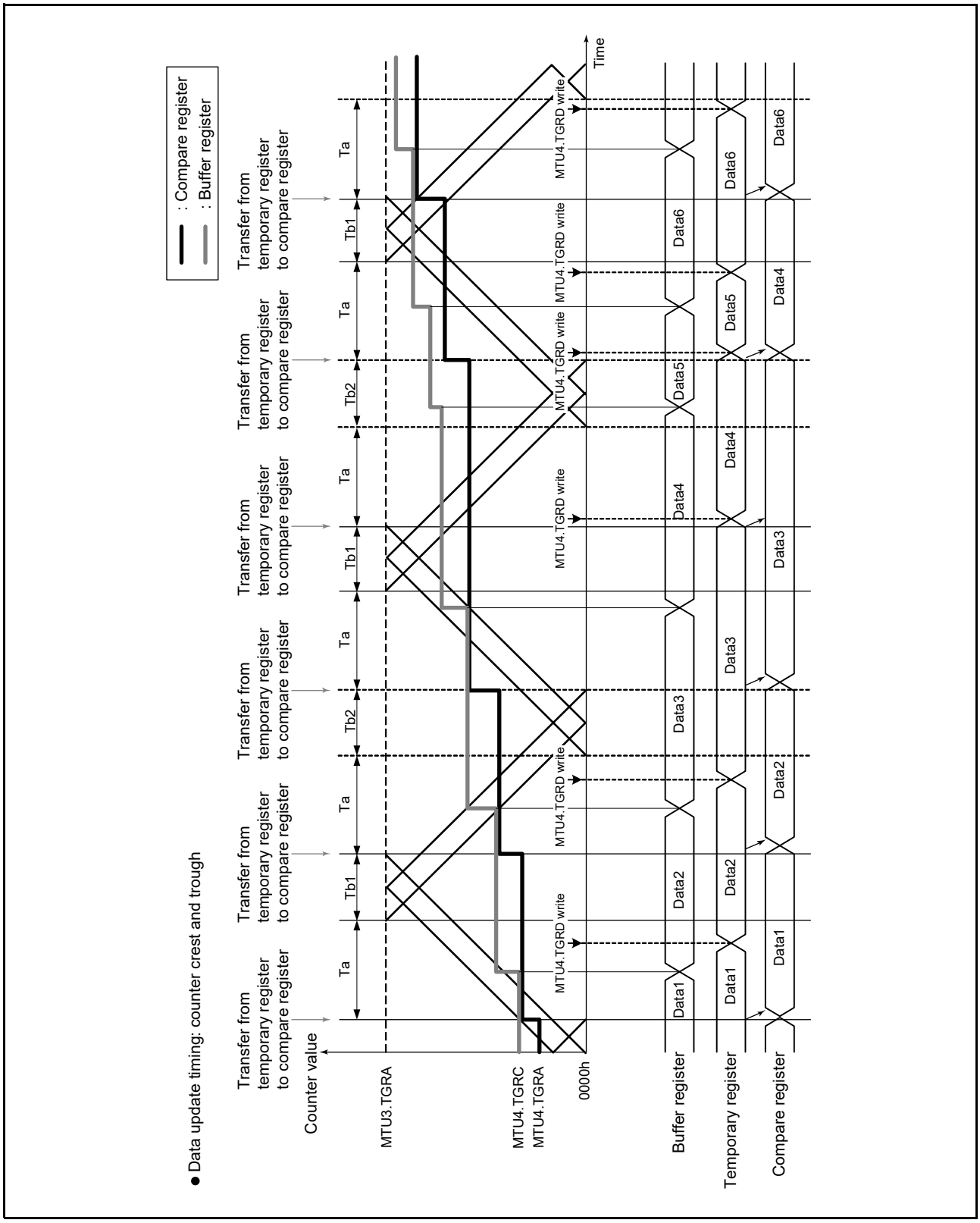

Figure 22.43 Example of Data Updating in Complementary PWM Mode

(i) Initial Output in Complementary PWM Mode

In complementary PWM mode, the initial output is determined by the setting of bits OLSN and OLSP in the TOCR1 register or bits OLS1N to OLS3N and OLS1P to OLS3P in the TOCR2 register.
This initial output is the non-active level of the PWM output and continues from when complementary PWM mode is set with the TMDR register until the MTU4.TCNT counter exceeds the value set in the TDDR register. Figure 22.44 shows an example of the initial output in complementary PWM mode.
An example of the waveform when the initial PWM duty value is smaller than the TDDR value is shown in Figure 22.45.

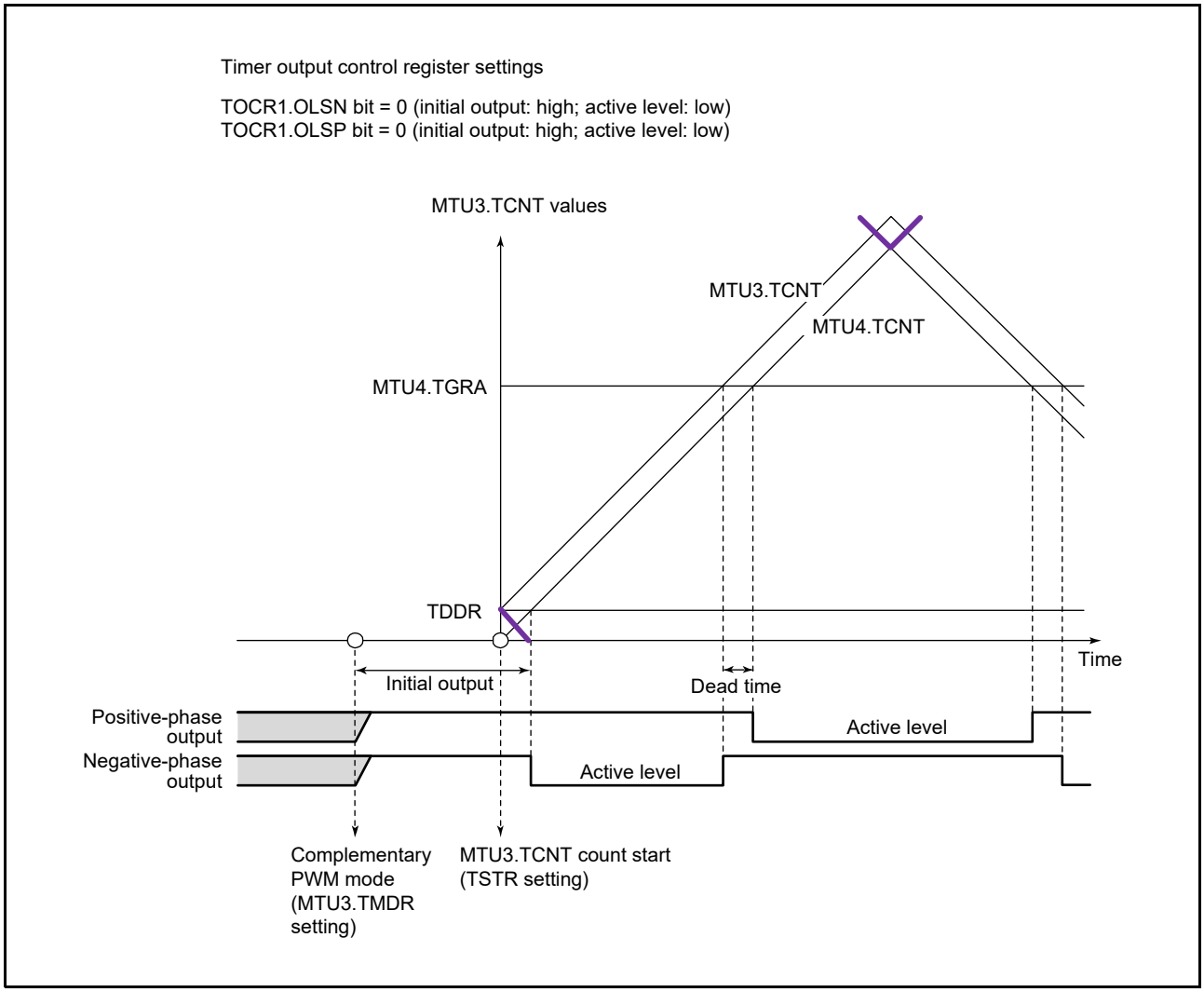

Figure 22.44 Example of Initial Output in Complementary PWM Mode (1)

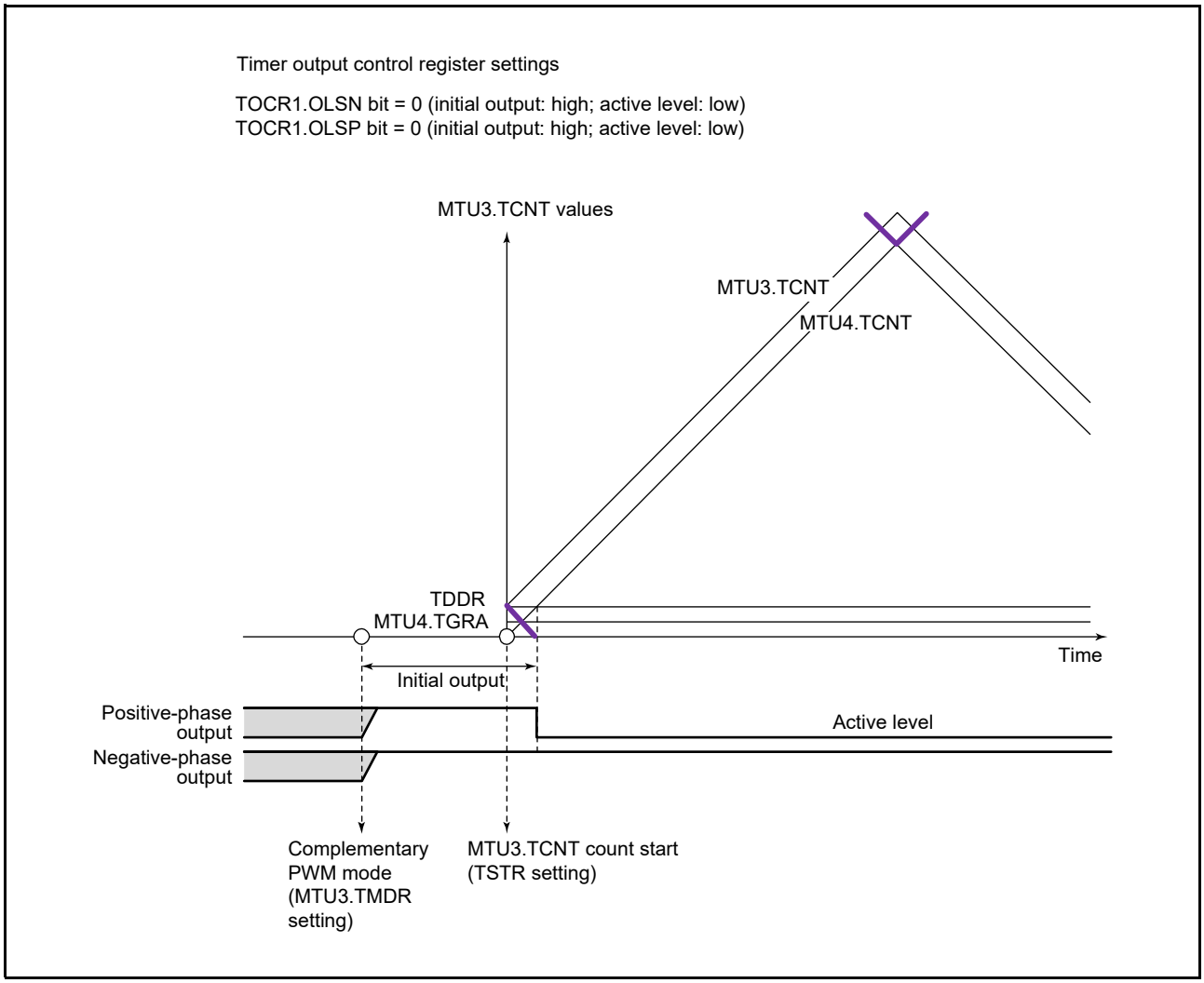

Figure 22.45 Example of Initial Output in Complementary PWM Mode (2)

(j) Method for Generating PWM Output in Complementary PWM Mode

In complementary PWM mode, six phases (three positive and three negative) of PWM waveforms can be output. Dead time can be set for PWM waveforms to be output.
A PWM waveform is generated by output of the level selected in the timer output control register in the event of a compare match between a counter and a compare register. While the TCNTS counter is counting, the compare register and temporary register values are simultaneously compared to generate consecutive PWM waveforms from 0 to 100% duty cycle. The relative timing of turn-on and turn-off compare match occurrence may vary, but the compare match that turns off each phase takes precedence to secure the dead time and ensure that the positive-phase and negative-phase turn-on times do not overlap. Figure 22.46 to Figure 22.48 show examples of waveform generation in complementary PWM mode.

The positive-phase and negative-phase turn-off timing is generated by a compare match with the counter indicated by a solid line, and the turn-on timing is generated by a compare match with the counter indicated by a dotted line, which operates with a delay equal to the dead time behind the counter indicated by a solid line. In the T1 period, compare match a that turns off the negative phase has the highest priority, and compare matches before a are ignored. In the T2 period, compare match c that turns off the positive phase has the highest priority, and compare matches before c are ignored.
In most cases, compare matches occur in the order a → b → c → d (or c → d → a' → b') as shown in Figure 22.46.
If compare matches deviate from the a → b → c → d order, since the time for which the negative phase is off is shorter than twice the dead time, the positive phase is not turned on. If compare matches deviate from the c → d → a' → b' order, since the time for which the positive phase is off is shorter than twice the dead time, the negative phase is not turned on.
As shown in Figure 22.47, if compare match c follows compare match a before compare match b, compare match b is ignored and the negative phase is turned on by compare match d. This is because turning off the positive phase has higher priority due to the occurrence of compare match c (positive-phase off timing) before compare match b (positive-phase on timing) (consequently, the waveform does not change because the positive phase goes from off to off).
Similarly, in the example in Figure 22.48, turning off the negative phase has priority due to the occurrence of compare match a' (negative-phase off timing) before compare match d (negative-phase on timing). As a result, the negative phase is not turned on.
Thus, in complementary PWM mode, compare matches at turn-off timings take precedence, and turn-on timing compare matches that occur before a turn-off timing compare match are ignored.

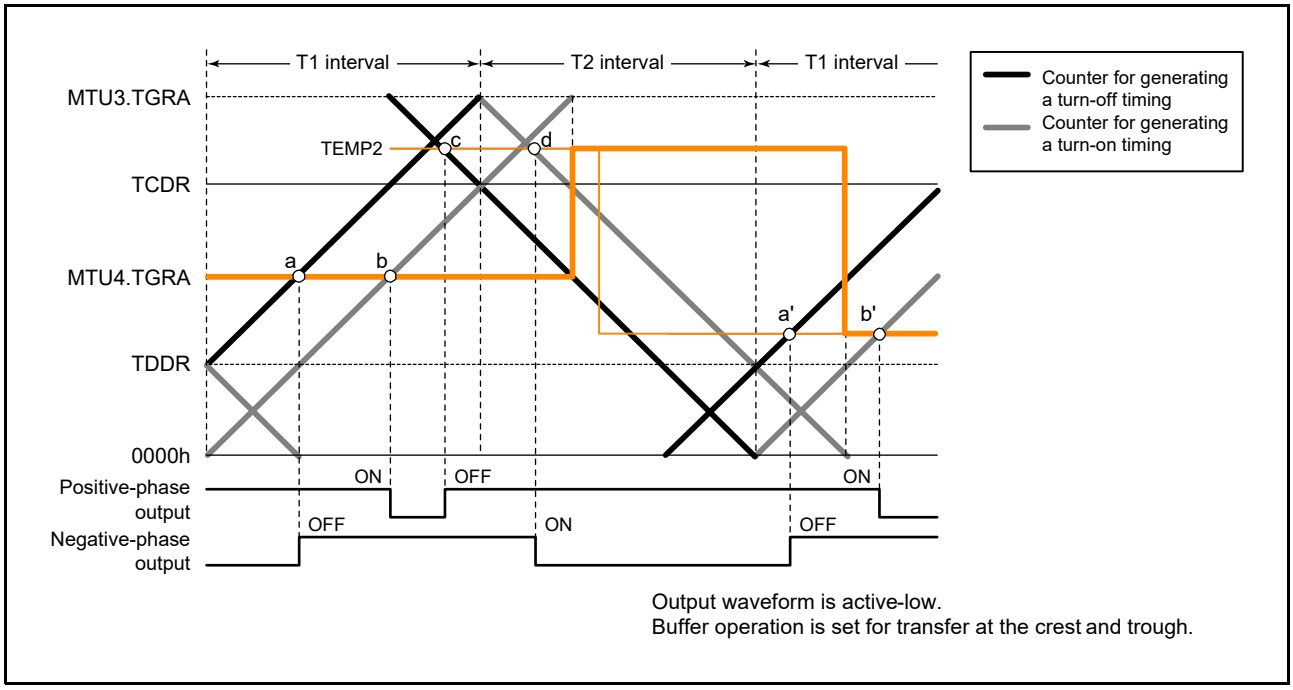

Figure 22.46 Example of Waveform Output in Complementary PWM Mode (1)

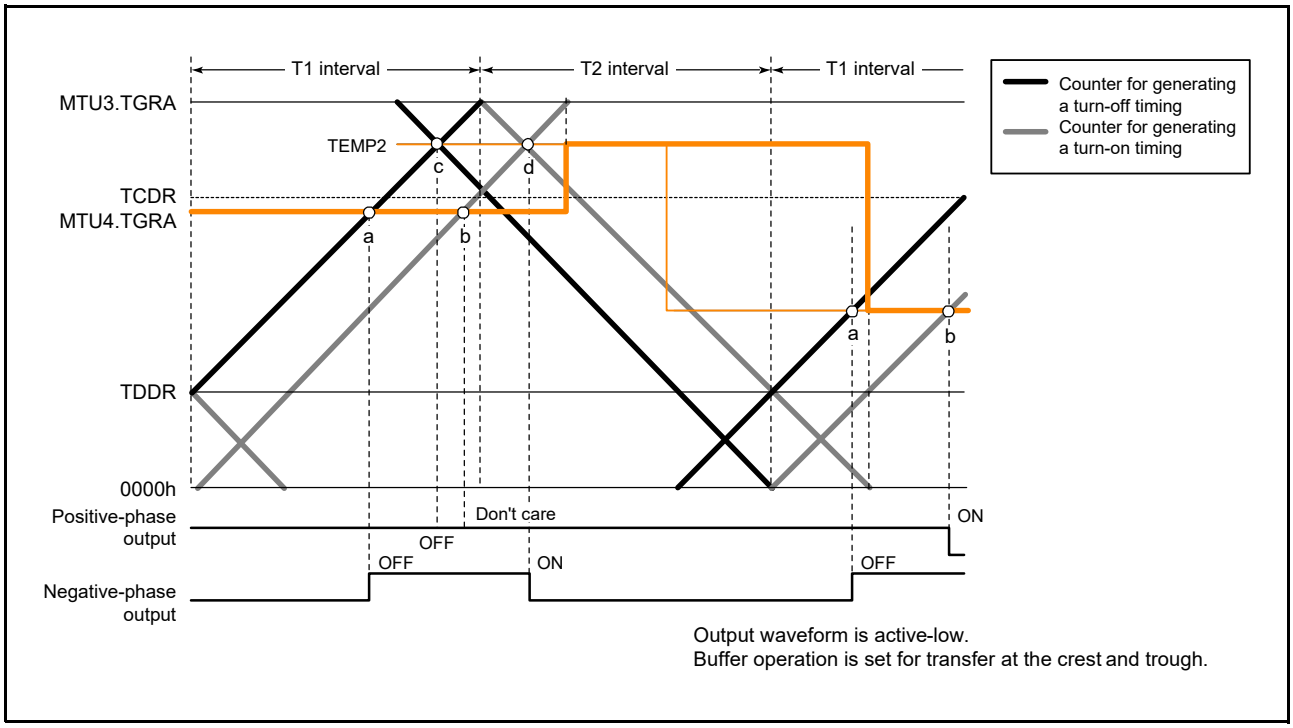

Figure 22.47 Example of Waveform Output in Complementary PWM Mode (2)

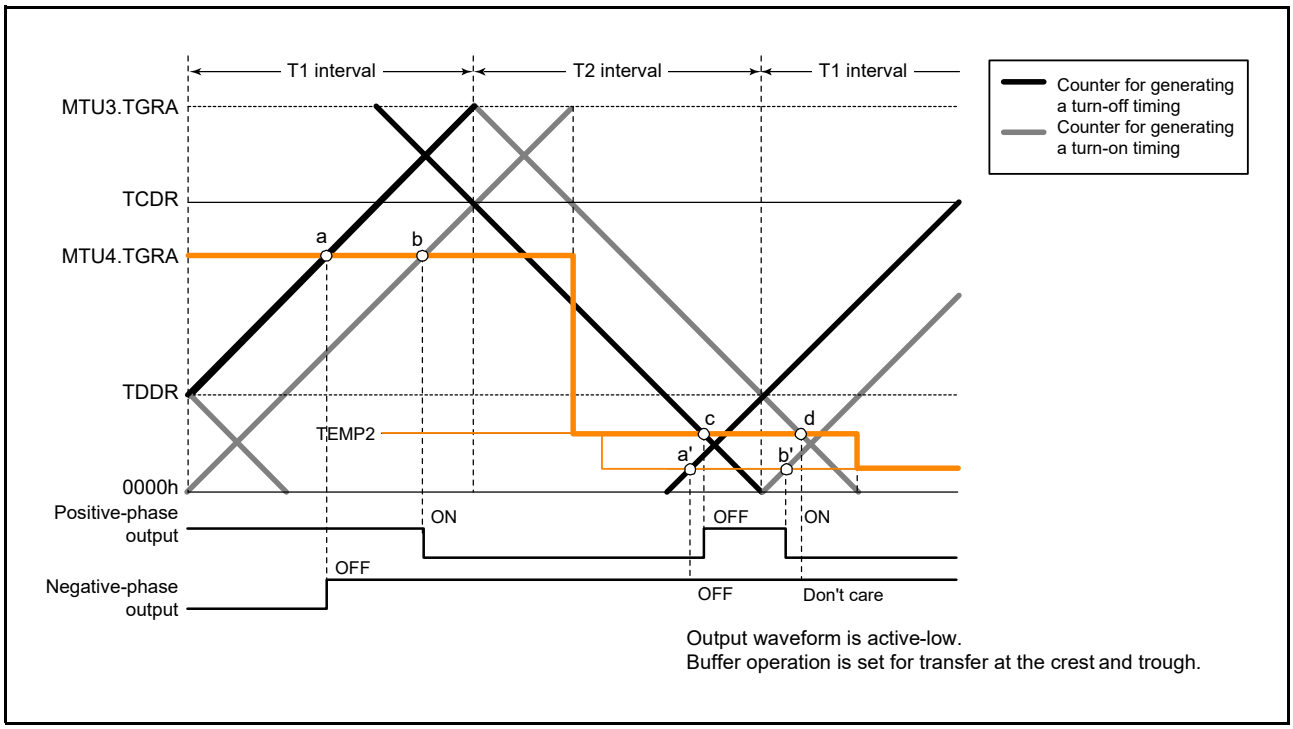

Figure 22.48 Example of Waveform Output in Complementary PWM Mode (3)

(k) 0% and 100% Duty Cycle Output in Complementary PWM Mode

In complementary PWM mode, 0% and 100% duty cycle PWM waveforms can be output as required. Figure 22.49 to Figure 22.53 show output examples.

A 100% duty cycle waveform is output when the data register value is set to 0000h. The waveform in this case has a positive phase with a 100% on-state. A 0% duty cycle waveform is output when the data register value is set to the same value as the MTU3.TGRA register. The waveform in this case has a positive phase with a 100% off-state.

On and off compare matches occur simultaneously, but if a turn-on compare match and turn-off compare match for the same phase occur simultaneously, both compare matches are ignored and the waveform does not change.

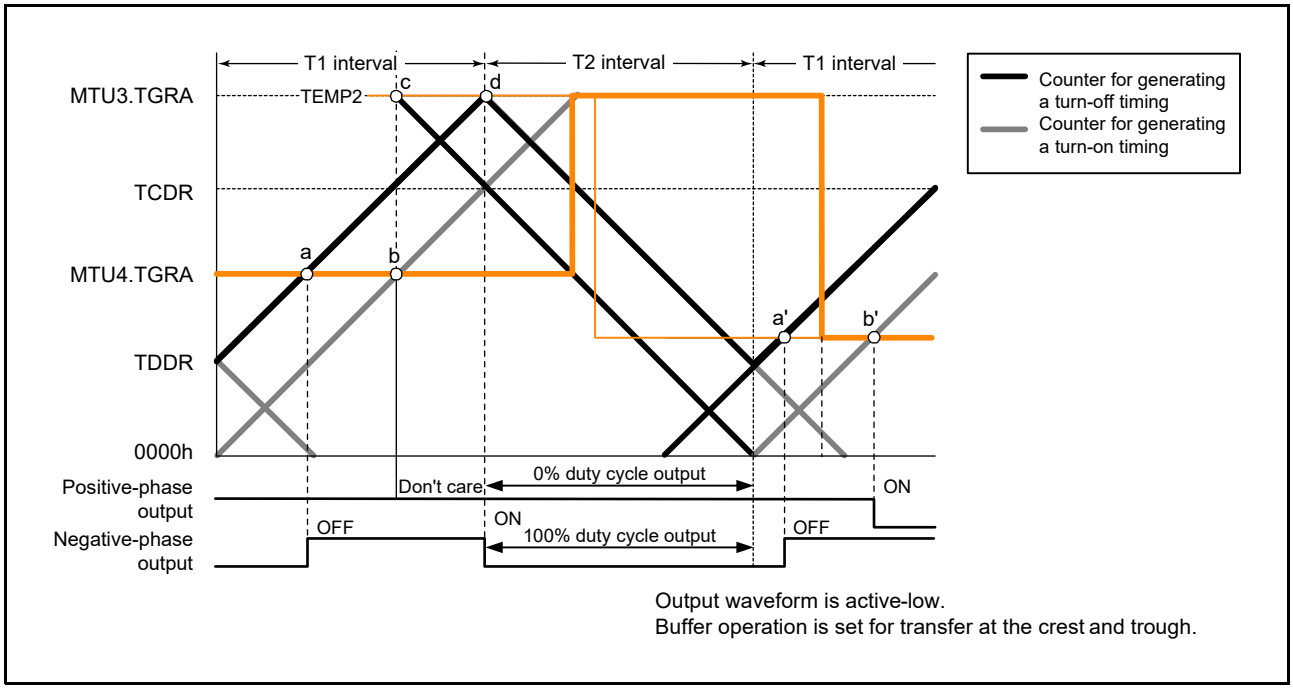

Figure 22.49 Example of 0% and 100% Waveform Output in Complementary PWM Mode (1)

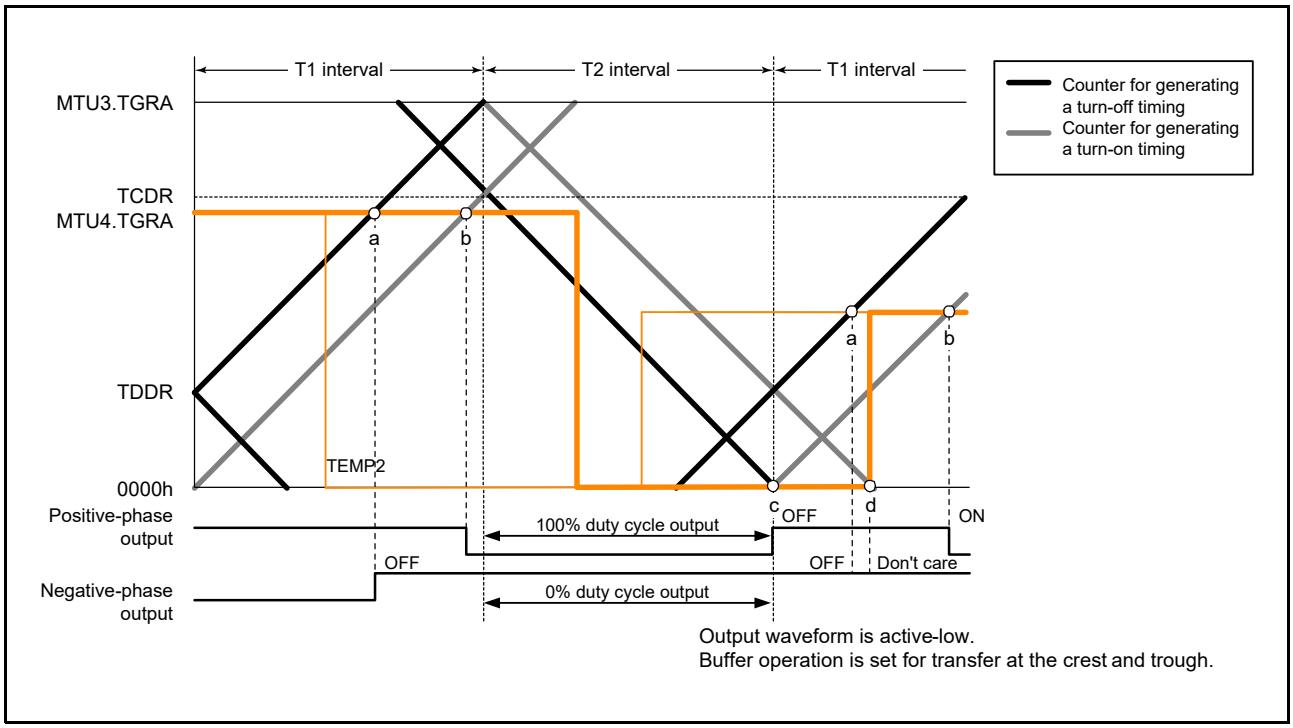

Figure 22.50 Example of 0% and 100% Waveform Output in Complementary PWM Mode (2)

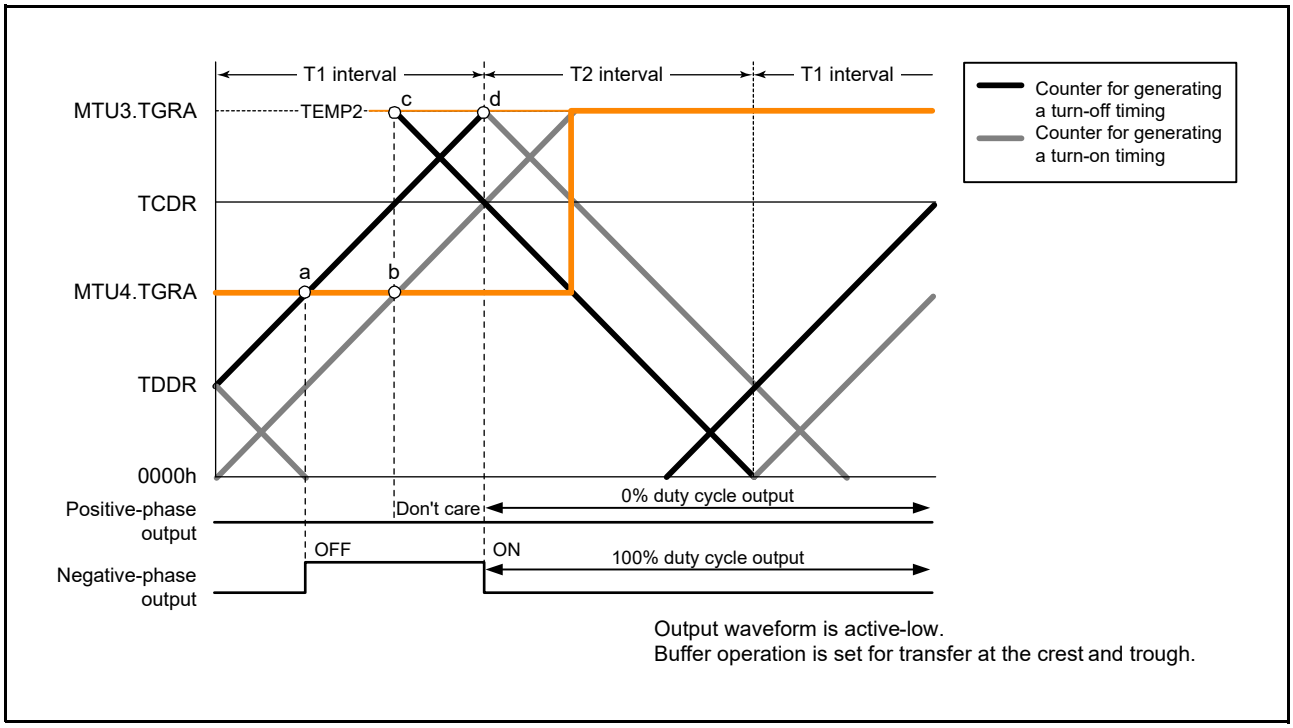

Figure 22.51 Example of 0% and 100% Waveform Output in Complementary PWM Mode (3)

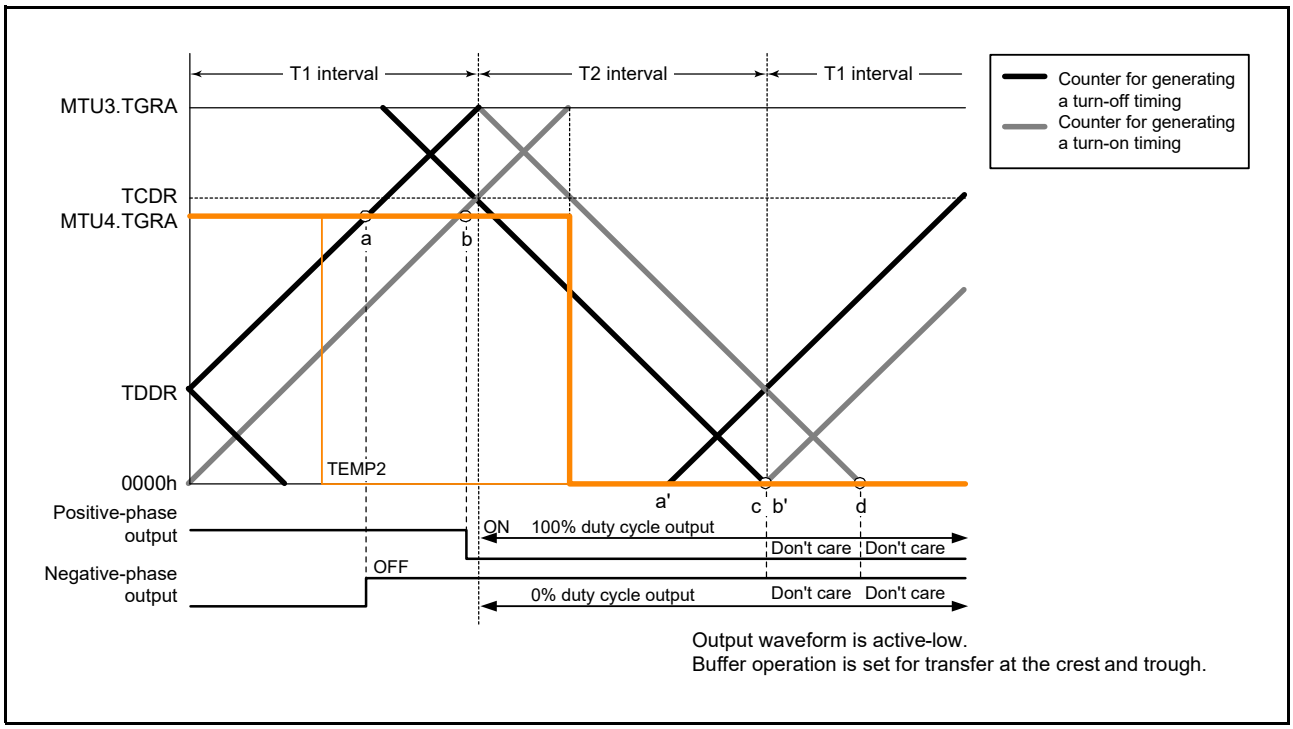

Figure 22.52 Example of 0% and 100% Waveform Output in Complementary PWM Mode (4)

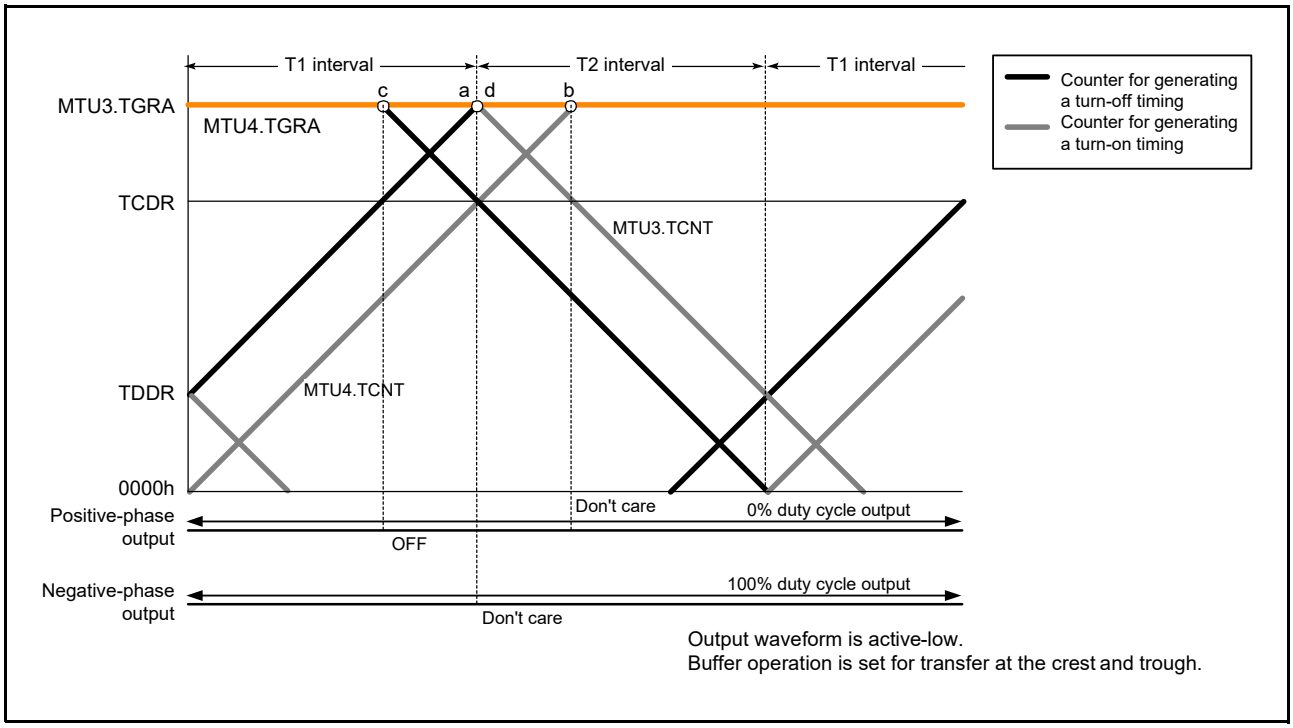

Figure 22.53 Example of 0% and 100% Waveform Output in Complementary PWM Mode (5)

(l) Toggle Output Synchronized with PWM Cycle

In complementary PWM mode, toggle output from the PWM output pin in synchronization with the PWM period can be enabled by setting the TOCR1.PSYE bit to 1. An example of a toggle output waveform is shown in Figure 22.54.
This output is toggled by a compare match between the MTU3.TCNT counter and the MTU3.TGRA register and a compare match between the MTU4.TCNT counter and 0000h.
The MTIOC3A pin is assigned for this toggle output. The initial output is a high level.

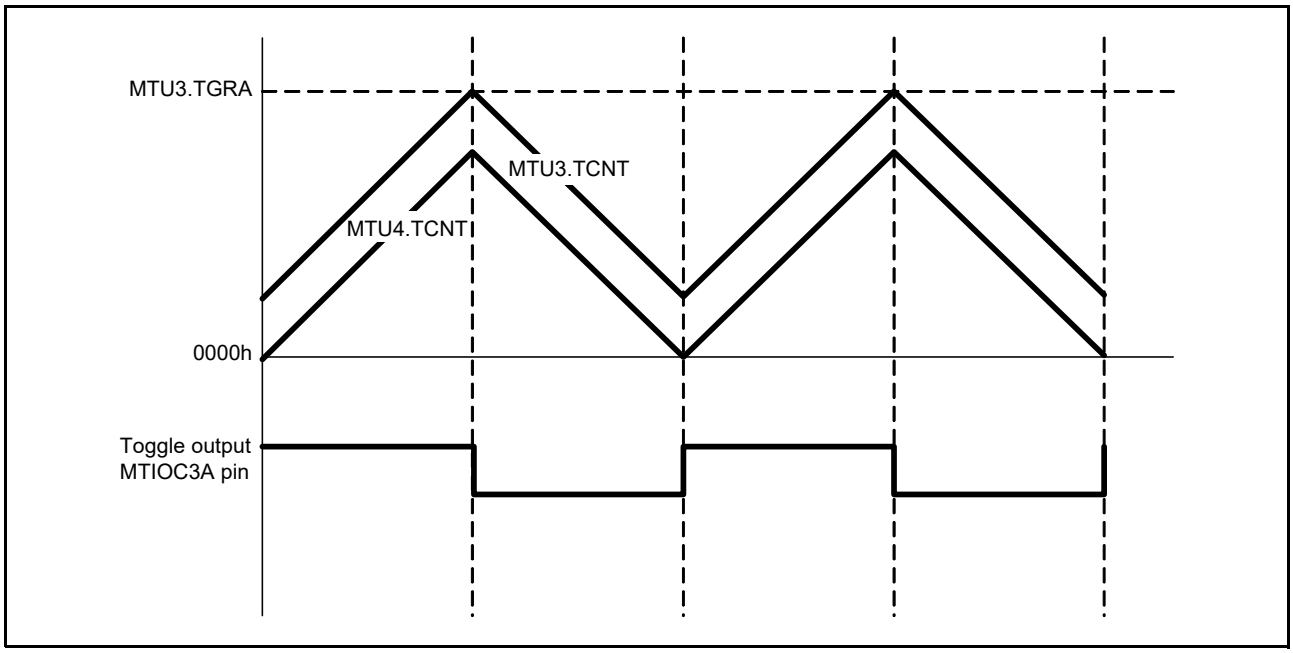

Figure 22.54 Example of Toggle Output Waveform Synchronized with PWM Output

(m) Counter Clearing by Another Channel

In complementary PWM mode, counters MTU3.TCNT, MTU4.TCNT, and TCNTS can be cleared by another channel source when a mode for synchronization with another channel is specified by the TSYR register and synchronous clearing is selected with the MTU3.TCR.CCLR[2:0] bits.

Figure 22.55 illustrates an example of this operation.

Use of this function enables a counter to be cleared and restarted through an external signal.

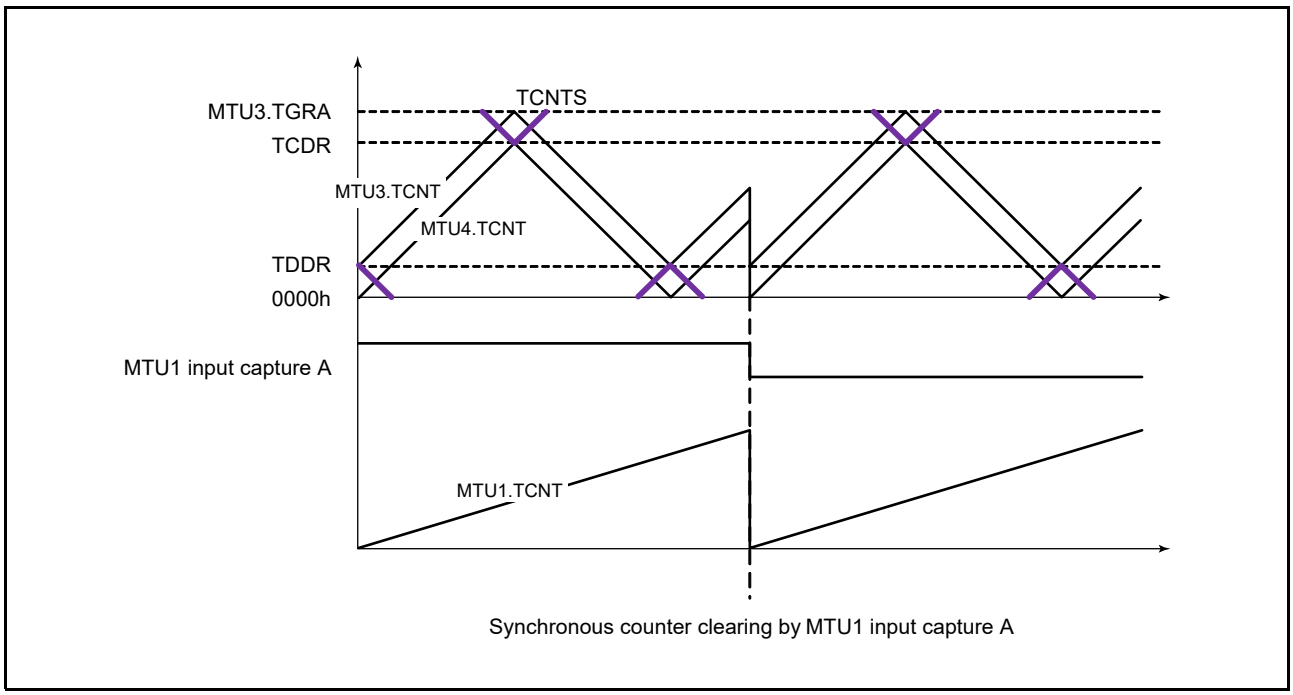

Figure 22.55 Counter Clearing Synchronized with Another Channel

(n) Output Waveform Control at Synchronous Counter Clearing in Complementary PWM Mode

Setting the TWCR.WRE bit to 1 suppresses initial output when synchronous counter clearing occurs in the Tb interval (Tb2 interval) at the trough in complementary PWM mode and controls abrupt change in duty cycle at synchronous counter clearing.

Initial output suppression through setting the TWCR.WRE bit to 1 is applicable only when synchronous clearing occurs in the Tb2 interval as indicated by (10) or (11) in Figure 22.56. When synchronous clearing occurs outside that interval, the initial value specified by the TOCR1.OLSN bit and TOCR1.OLSP bit is output. Even in the Tb2 interval, if synchronous clearing occurs in the initial output period (indicated by (1) in Figure 22.56) immediately after the counters start operation, initial value output is not suppressed.

Synchronous clearing in any of MTU0 to MTU2 can cause counter clearing in MTU3 and MTU4.

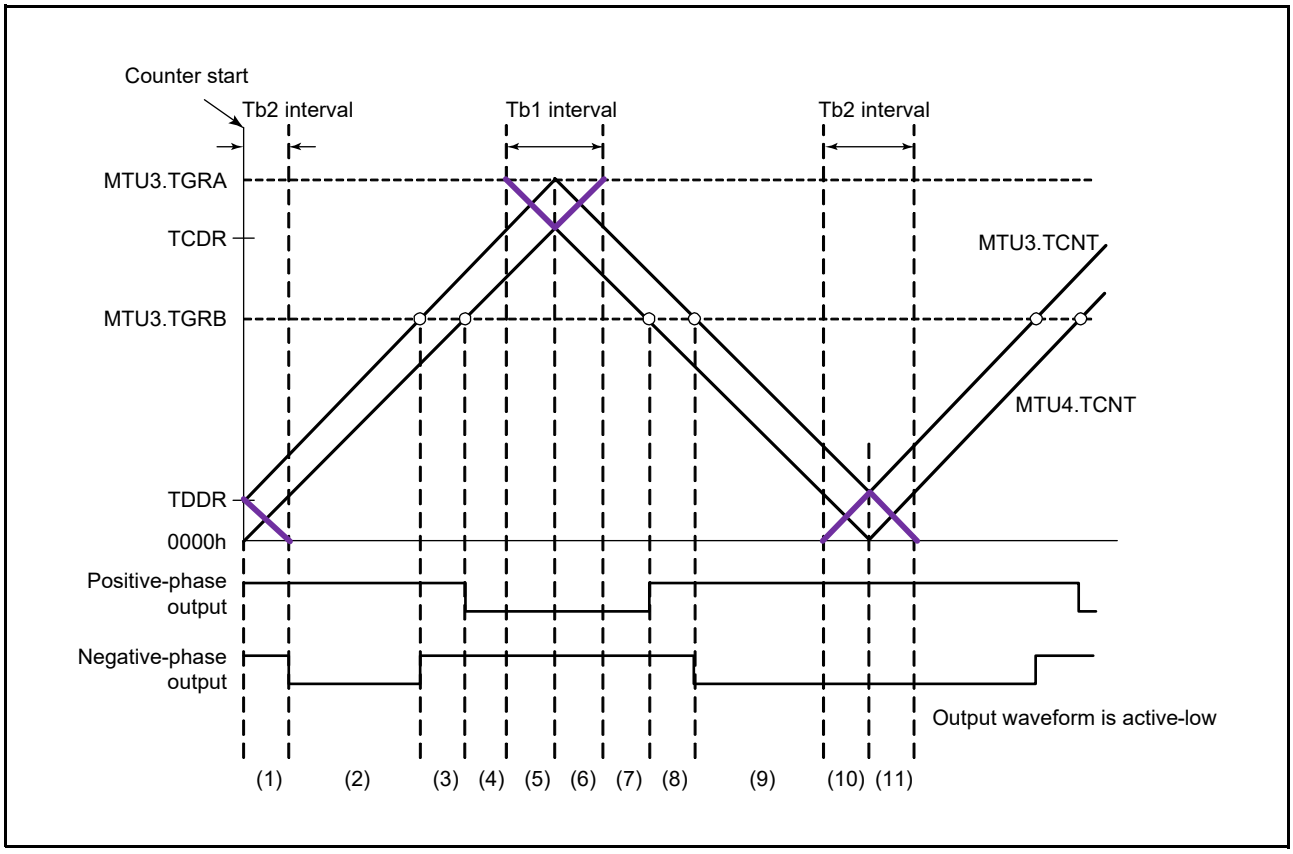

Figure 22.56 Timing for Synchronous Counter Clearing

- Example of Procedure for Setting Output Waveform Control at Synchronous Counter Clearing in Complementary PWM Mode

An example of the procedure for setting output waveform control at synchronous counter clearing in complementary PWM mode is shown in Figure 22.57.

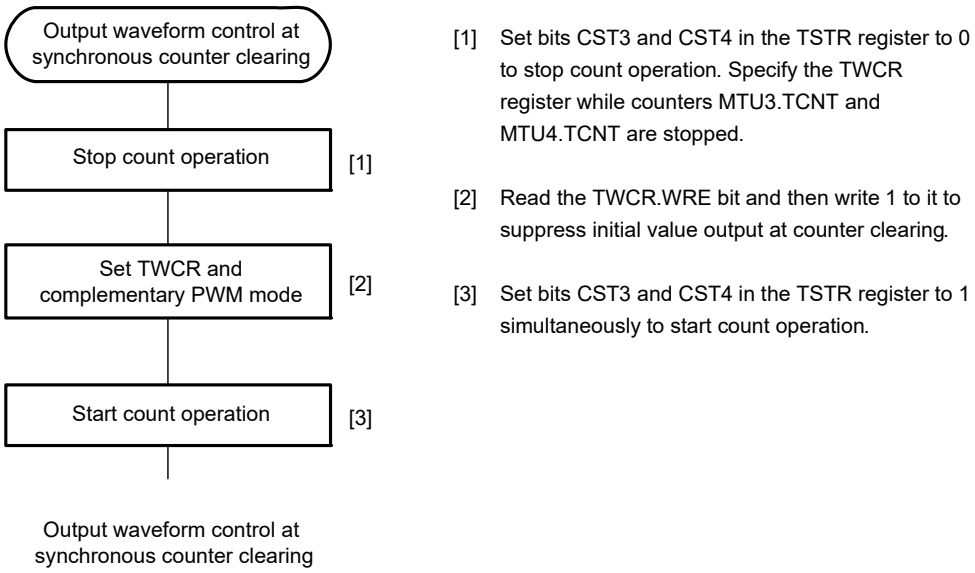

Figure 22.57 Example of Procedure for Setting Output Waveform Control at Synchronous Counter Clearing in Complementary PWM Mode

- Examples of Output Waveform Control at Synchronous Counter Clearing in Complementary PWM Mode

Figure 22.58 to Figure 22.61 show examples of output waveform control in which the MTU operates in complementary PWM mode and synchronous counter clearing is generated while the TWCR.WRE bit is set to 1. In the examples shown in Figure 22.58 to Figure 22.61, synchronous counter clearing occurs at timing (3), (6), (8), and (11) shown in Figure 22.56, respectively.

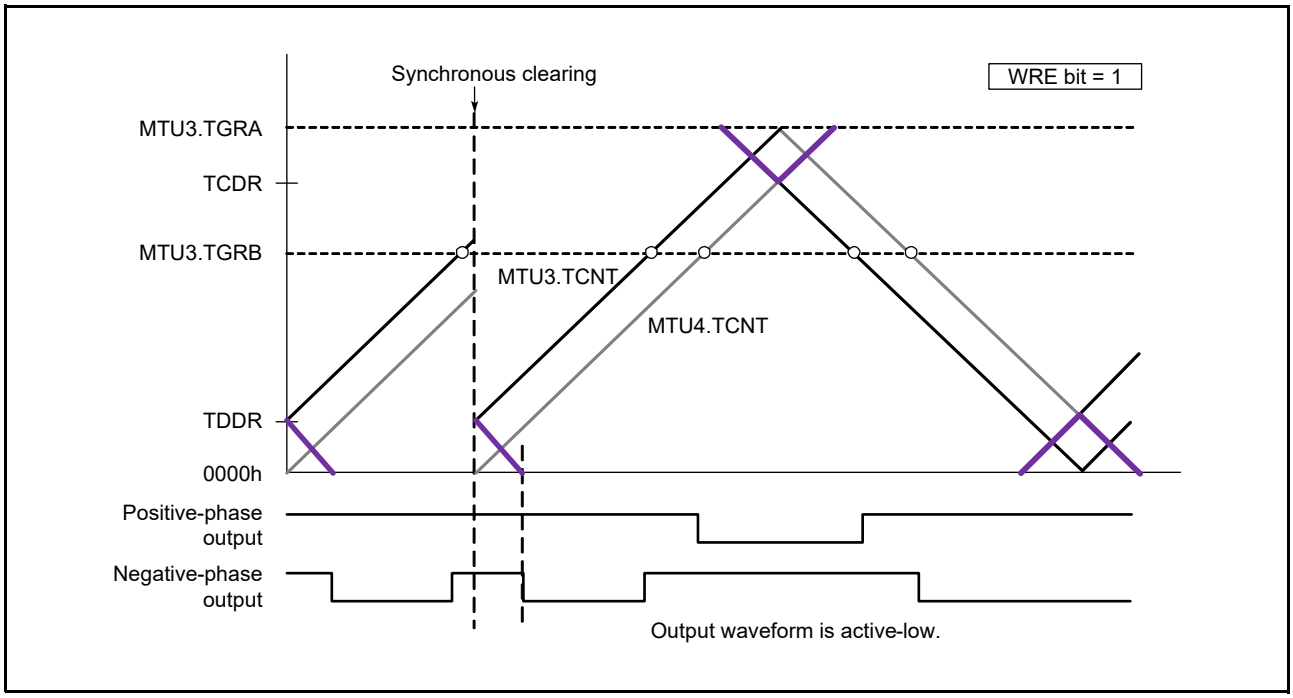

Figure 22.58 Example of Synchronous Clearing in Dead Time during Up-Counting (Timing (3) in Figure 22.56; TWCR.WRE Bit is 1)

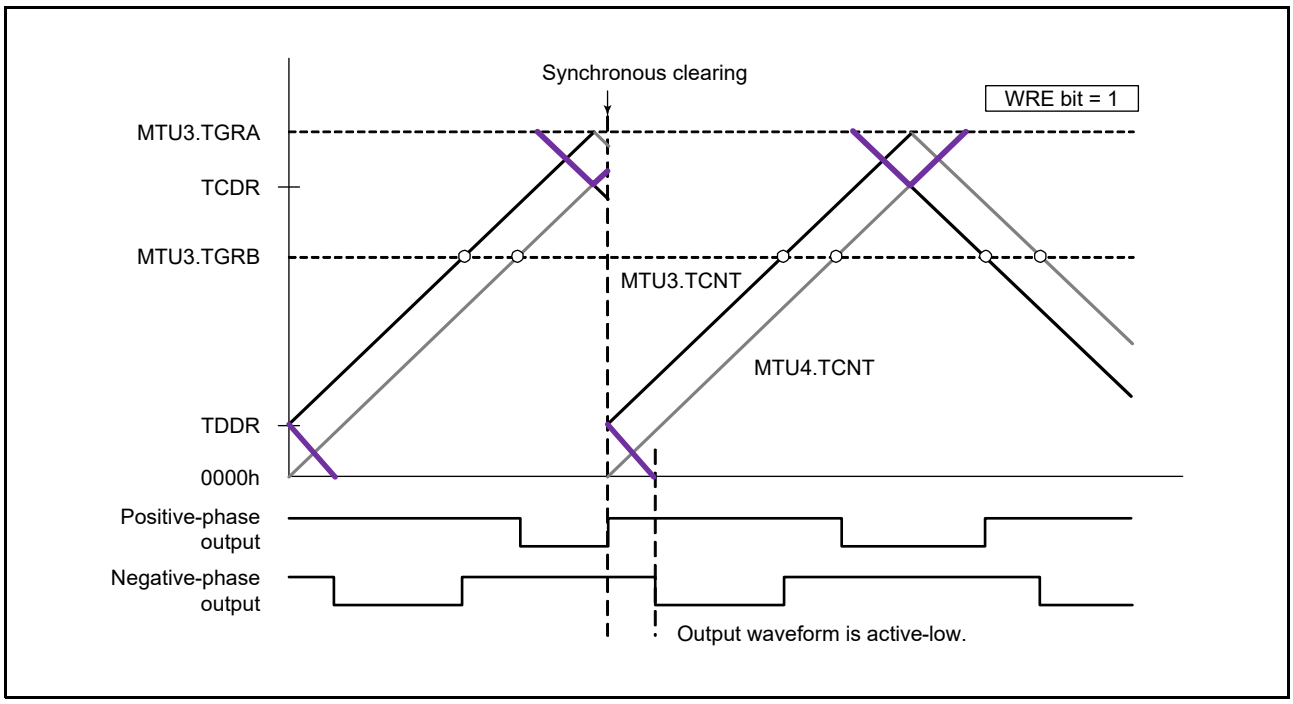

Figure 22.59 Example of Synchronous Clearing in Interval Tb at Crest (Timing (6) in Figure 22.56; TWCR.WRE Bit is 1)

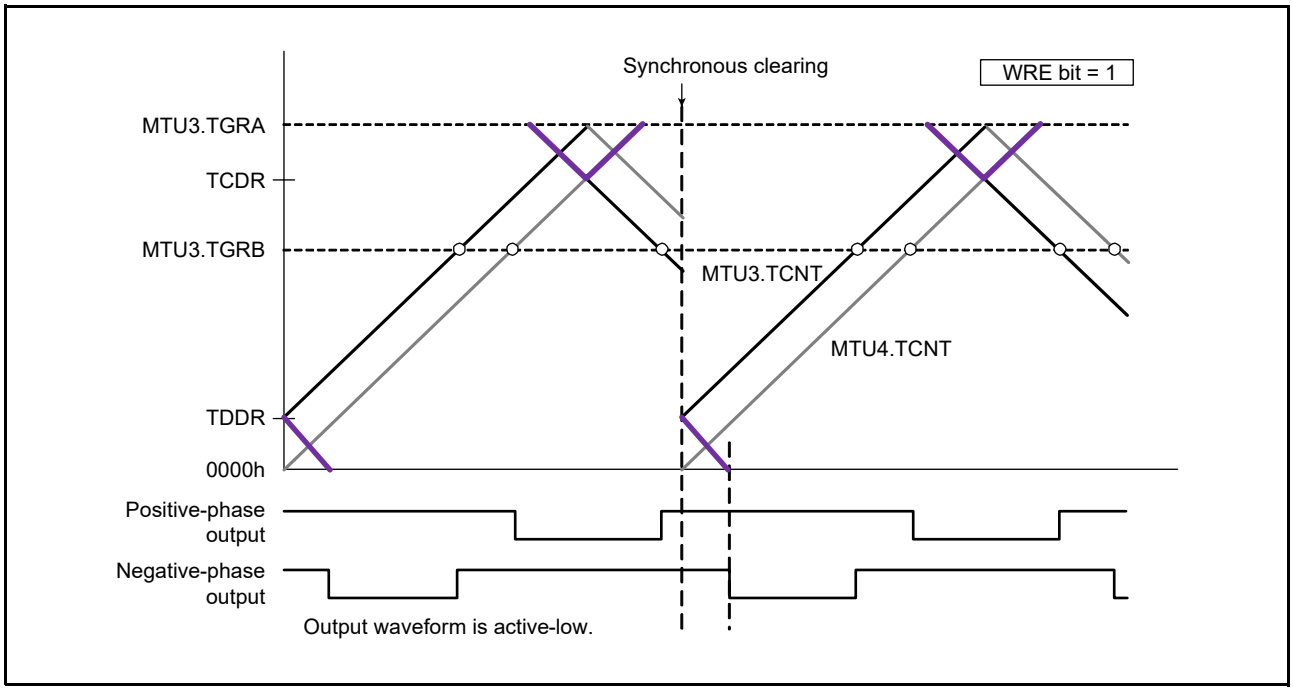

Figure 22.60 Example of Synchronous Clearing in Dead Time during Down-Counting (Timing (8) in Figure 22.56; TWCR.WRE Bit is 1)

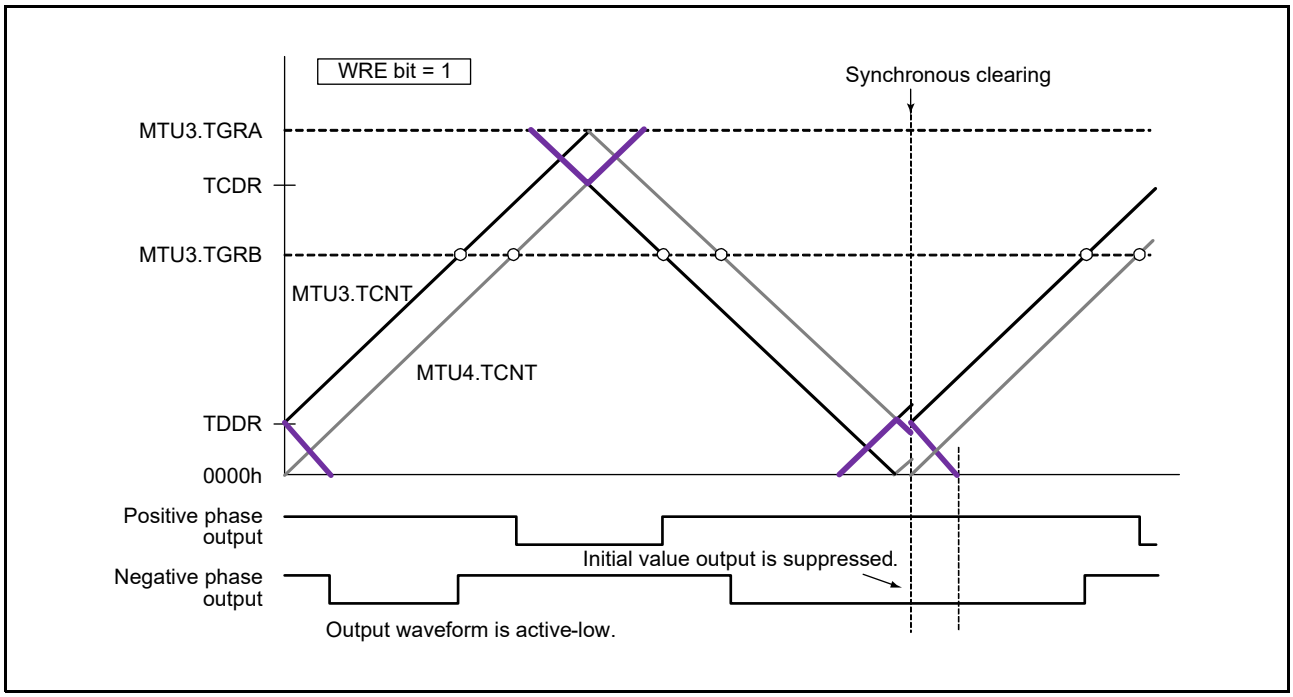

Figure 22.61 Example of Synchronous Clearing in Interval Tb at Trough (Timing (11) in Figure 22.56; TWCR.WRE Bit is 1)

(o) Counter Clearing by MTU3.TGRA Compare Match

In complementary PWM mode, counters MTU3.TCNT, MTU4.TCNT, and TCNTS can be cleared by MTU3.TGRA compare match when the TWCR.CCE bit is set.
Figure 22.62 shows an operation example.

Note: Use this function only in complementary PWM mode 1 (transfer at crest).
Note: Do not specify synchronous clearing by another channel (do not set the TSYR.SYNCn bits (n = 0 to 4) to 1).
Note: Do not set the PWM duty cycle value to 0000h.
Note: Do not set the TOCR1.PSYE bit to 1.

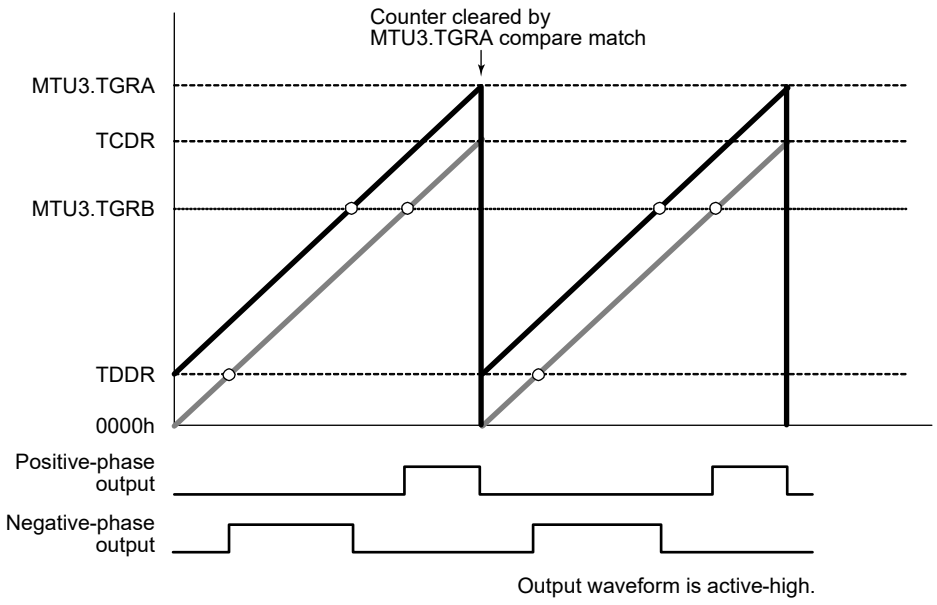

Figure 22.62 Example of Counter Clearing Operation by MTU3.TGRA Compare Match

(p) Example of Waveform Output for Driving AC Synchronous Motor (Brushless DC Motor)

In complementary PWM mode, a brushless DC motor can easily be controlled using the TGCR register. Figure 22.63 to Figure 22.66 show examples of brushless DC motor driving waveforms created using the TGCR register.

To switch the output phases for a 3-phase brushless DC motor by means of external signals detected with a Hall element, etc., set the TGCR.FB bit to 0. In this case, the external signals indicating the magnetic pole position should be input to timer input pins MTIOC0A, MTIOC0B, and MTIOC0C in MTU0. When an edge is detected at pin MTIOC0A, MTIOC0B, or MTIOC0C, the output on/off state is switched automatically.

When the TGCR.FB bit is 1, the output on/off state is switched when the TGCR.UF bit, TGCR.VF bit, or TGCR.WF bit is set to 0 or 1.

The driving waveforms are output from the 6-phase PWM output pins for complementary PWM mode.

With this 6-phase output, while the output is turned on, chopping output is available through complementary PWM mode output function by setting the TGCR.N bit or TGCR.P bit to 1. When the TGCR.N bit or TGCR.P bit is 0, the level output is selected.

The active level of the 6-phase output (on output level) can be set with the TOCR1.OLSN bit and TOCR1.OLSP bit regardless of the setting of the TGCR.N bit and TGCR.P bit.

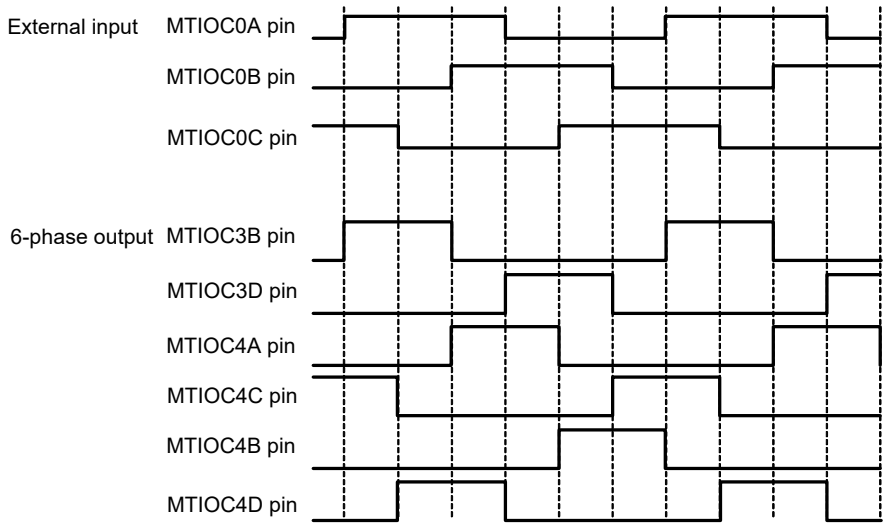

When TGCR.BDC = 1, TGCR.N = 0, TGCR.P = 0, and TGCR.FB = 0, the high level is the active level for output.

Figure 22.63 Example of Output Phase Switching by External Input (1)

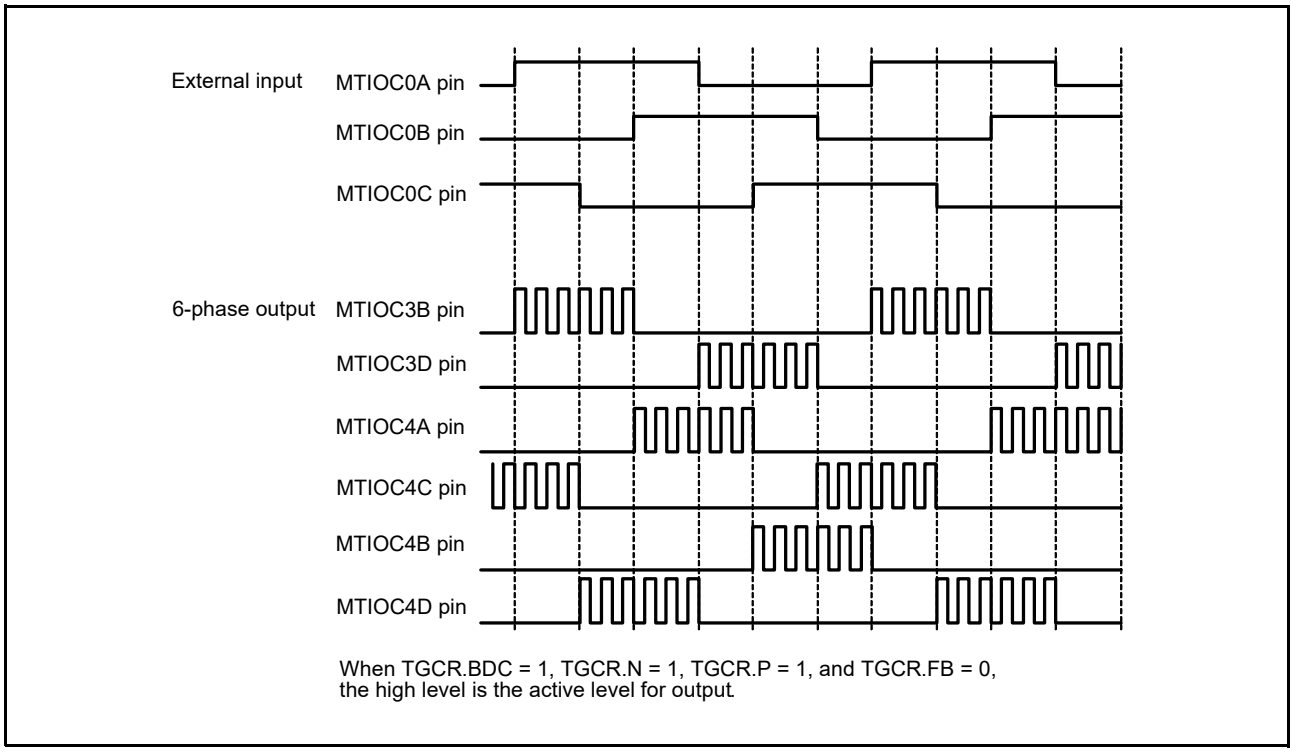

Figure 22.64 Example of Output Phase Switching by External Input (2)

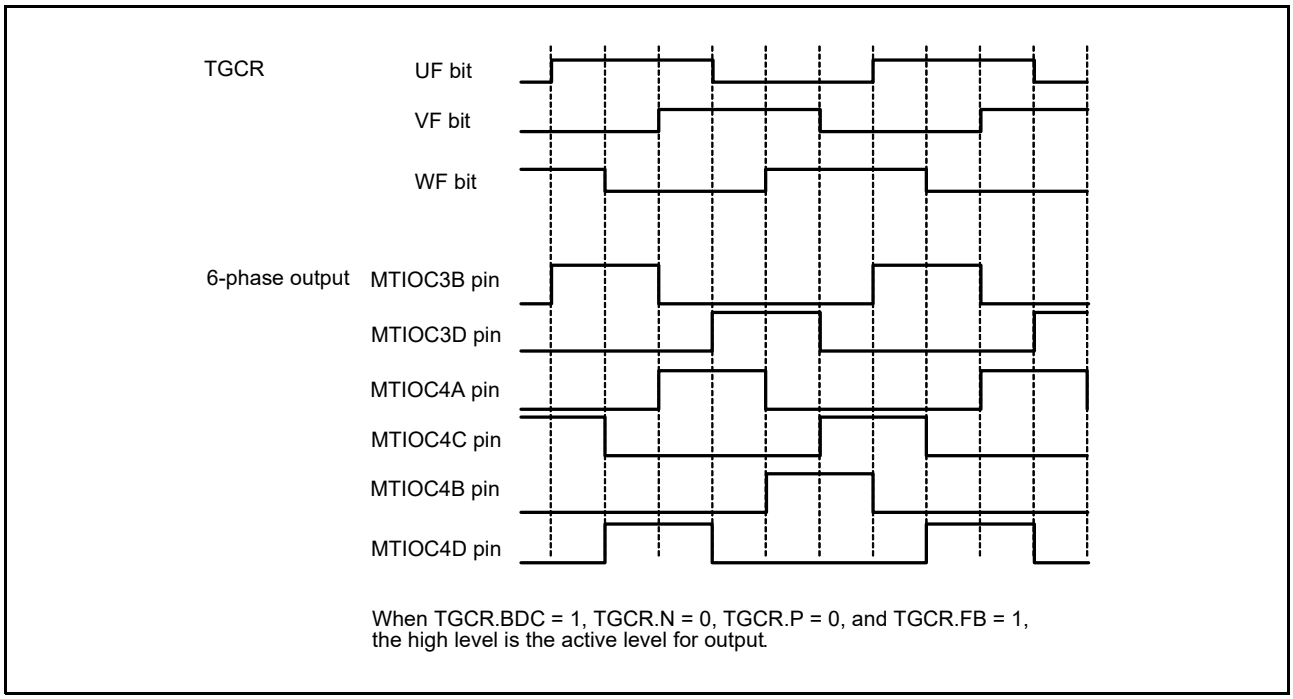

Figure 22.65 Example of Output Phase Switching through UF, VF, and WF Bit Settings (1)

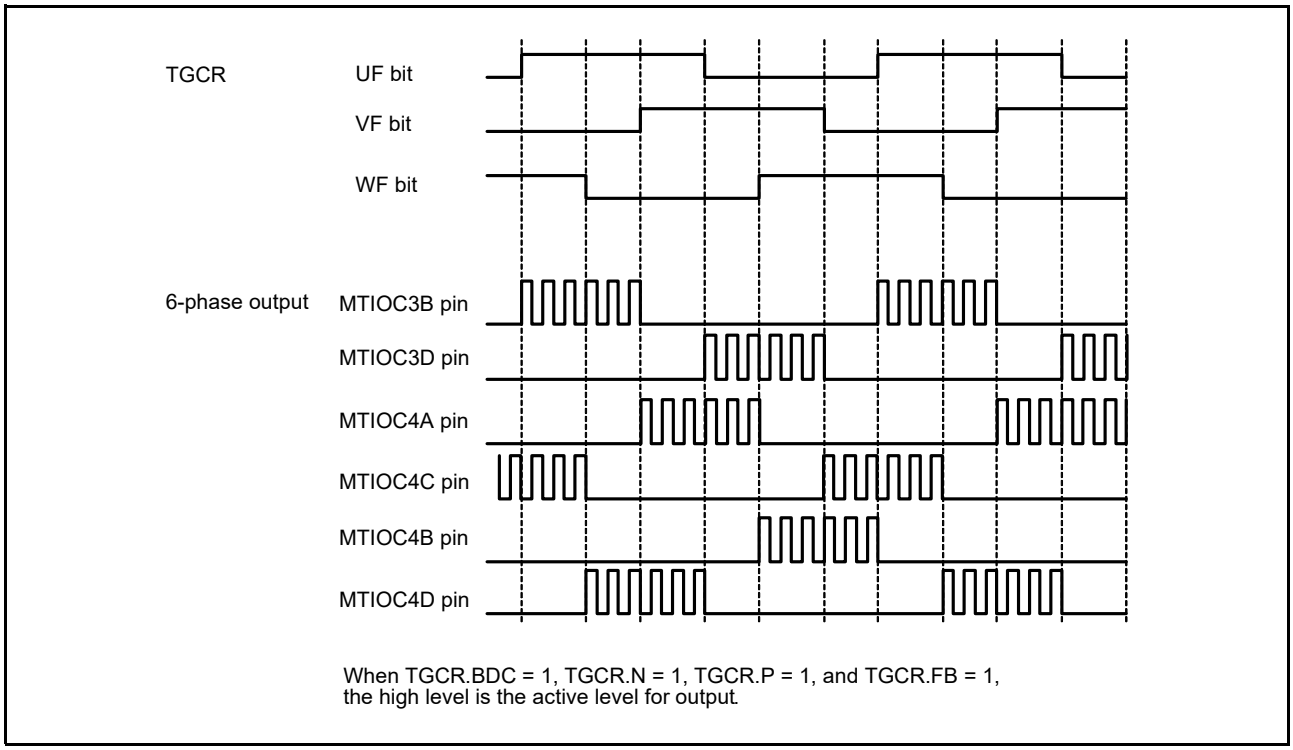

Figure 22.66 Example of Output Phase Switching through UF, VF, and WF Bit Settings (2)

(q) A/D Conversion Start Request Setting

In complementary PWM mode, an A/D conversion start request can be issued using the MTU3.TGRA compare match, the MTU4.TCNT underflow (trough), or compare match on a channel other than MTU3 and MTU4.

When start requests using the MTU3.TGRA compare match are specified, A/D conversion can be started at the crest of the MTU3.TCNT count.

A/D conversion start requests can be specified by setting the TIER.TTGE bit to 1. To issue an A/D conversion start request at an MTU4.TCNT underflow (trough), set the MTU4.TIER.TTGE2 bit to 1.

(3) Interrupt Skipping in Complementary PWM Mode

Interrupts TGIA3 (at the crest) and TCIV4 (at the trough) in MTU3 and MTU4 can be skipped up to seven times by setting the TITCR register.

Transfers from a buffer register to a temporary register or a compare register can be skipped in coordination with interrupt skipping by making settings in the TBTER register. For the linkage with buffer registers, refer to description (c) Buffer Transfer Control Linked with Interrupt Skipping, below.

A/D conversion start requests generated by the A/D conversion start request delaying function can also be skipped in coordination with interrupt skipping by making settings in the TADCR register. For the linkage with the A/D conversion start request delaying function, refer to section 22.3.9, A/D Conversion Start Request Delaying Function.

The TITCR register should be set while the TGIA3 and TCIV4 interrupt requests are disabled by the settings of registers MTU3.TIER and MTU4.TIER under the conditions in which compare match never occur and TGIA3 and TGIA4 interrupt requests by compare match are never generated. Before changing the skipping count, be sure to set the TITCR.T3AEN and TITCR.T4VEN bits to 0 to clear the skipping counter.

(a) Example of Interrupt Skipping Operation Setting Procedure

Figure 22.67 shows an example of the interrupt skipping operation setting procedure. Figure 22.68 shows the periods during which interrupt skipping count can be changed.

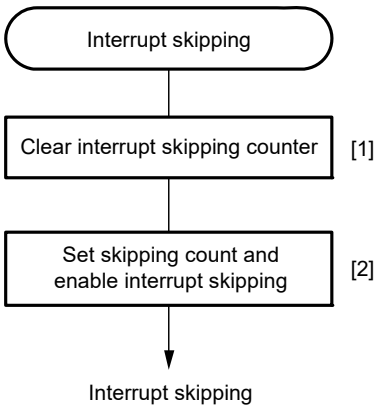

[1] Set bits T3AEN and T4VEN in the TITCR register to 0 to clear the skipping counter.

[2] Specify the interrupt skipping count within the range from 0 to 7 times in bits T3ACOR[2:0] and T4VCOR[2:0] in the TITCR register, and enable interrupt skipping through bits T3AEN and T4VEN.

Note: The setting of the TITCR register must be done while the TGIA3 and TCIV4 interrupt requests are disabled by the settings of registers MTU3.TIER and MTU4.TIER under the condition in which compare match never occur. Before changing the skipping count, be sure to set the TITCR.T3AEN and TITCR.T4VEN bits to 0 to clear the skipping counter.

Figure 22.67 Example of Interrupt Skipping Operation Setting Procedure

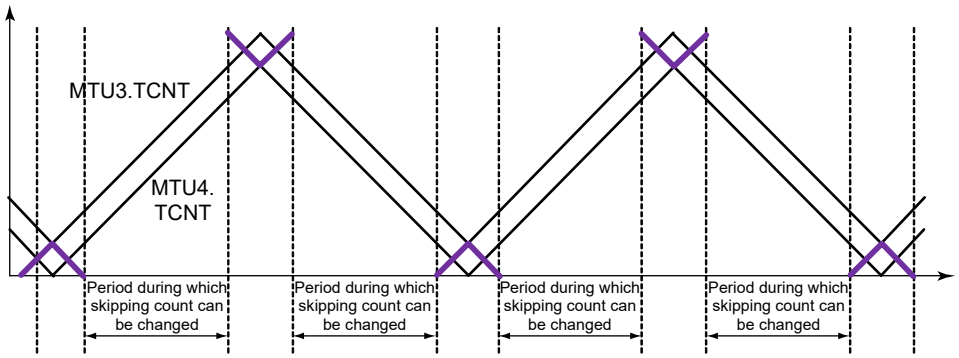

Figure 22.68 Periods during which Interrupt Skipping Count Can be Changed

(b) Example of Interrupt Skipping Operation

Figure 22.69 shows an example of MTU3.TGIA interrupt skipping in which the interrupt skipping count is set to three by the TITCR.T3ACOR[2:0] bits and the TITCR.T3AEN bit is set to 1.

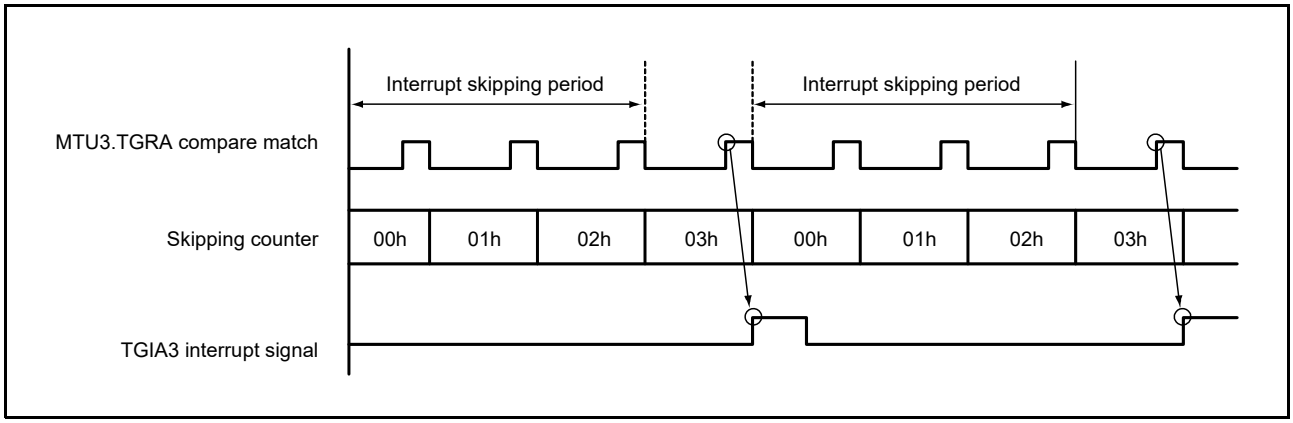

Figure 22.69 Example of Interrupt Skipping Operation

(c) Buffer Transfer Control Linked with Interrupt Skipping

In complementary PWM mode, whether to transfer data from a buffer register to a temporary register and whether to link the transfer with interrupt skipping can be specified with the TBTER.BTE[1:0] bits.

Figure 22.70 shows an example of operation when buffer transfer is disabled (BTE[1:0] = 01b). While this setting is valid, data is not transferred from the buffer register to the temporary register.

Figure 22.71 shows an example of operation when buffer transfer is linked with interrupt skipping (BTE[1:0] = 10b). While this setting is valid, if data is written to the buffer register within the buffer transfer-enabled period, the data is transferred immediately from the buffer register to the temporary register. If data is written to the buffer register outside the buffer transfer-enabled period, the data is transferred from the buffer register to the temporary register at the timing when the next buffer transfer-enabled period starts.

Note that the buffer transfer-enabled period depends on the TITCR.T3AEN bit and TITCR.T4VEN bit settings. Figure 22.72 shows the relationship between the TITCR.T3AEN bit and TITCR.T4VEN bit settings and buffer transfer-enabled period.

Note: This function must always be used in combination with interrupt skipping.
When interrupt skipping is disabled (the T3AEN and T4VEN bits in the TITCR register are set to 0 or the skipping count setting bits (T3ACOR[2:0] and T4VCOR[2:0]) in the TITCR register are set to 000b), make sure that buffer transfer is not linked with interrupt skipping (set the TBTER.BTE[1] bit to 0).
If buffer transfer is linked with interrupt skipping while interrupt skipping is disabled, buffer transfer is never performed.

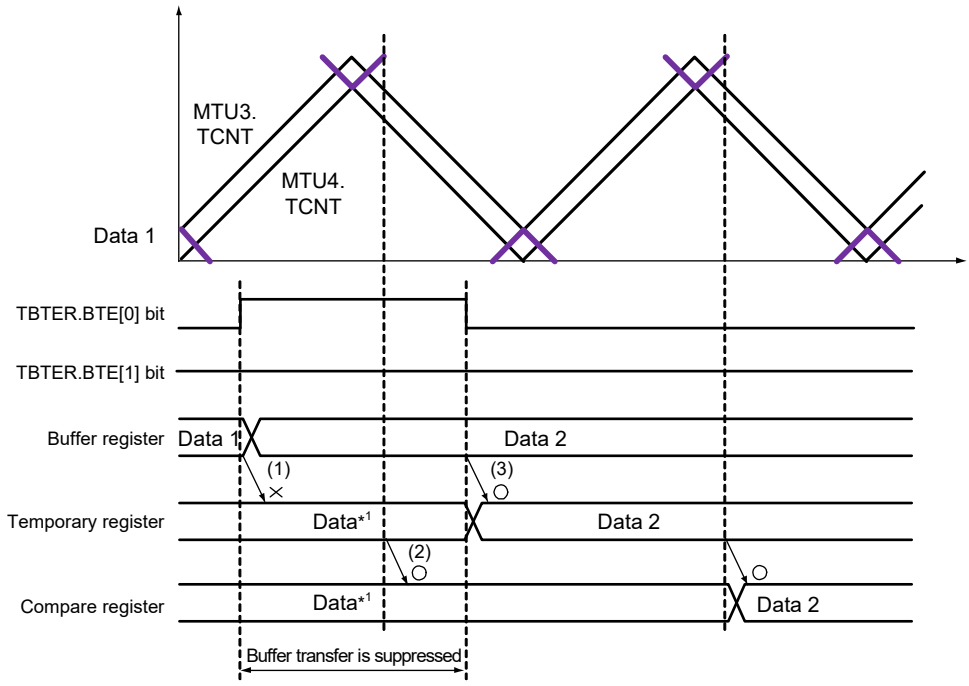

(1) No data is transferred from the buffer register to the temporary register in the buffer transfer-disabled period (setting TBTER.BTE[1:0] to 01b).
(2) Data is transferred from the temporary register to the compare register even in the compare transfer-disabled period.
(3) After buffer transfer is enabled, data is transferred from the buffer register to the temporary register.

Note 1. When buffer transfer at the crest is selected.

Figure 22.70 Example of Operation When Buffer Transfer is Disabled (TBTER.BTE[1:0] = 01b)

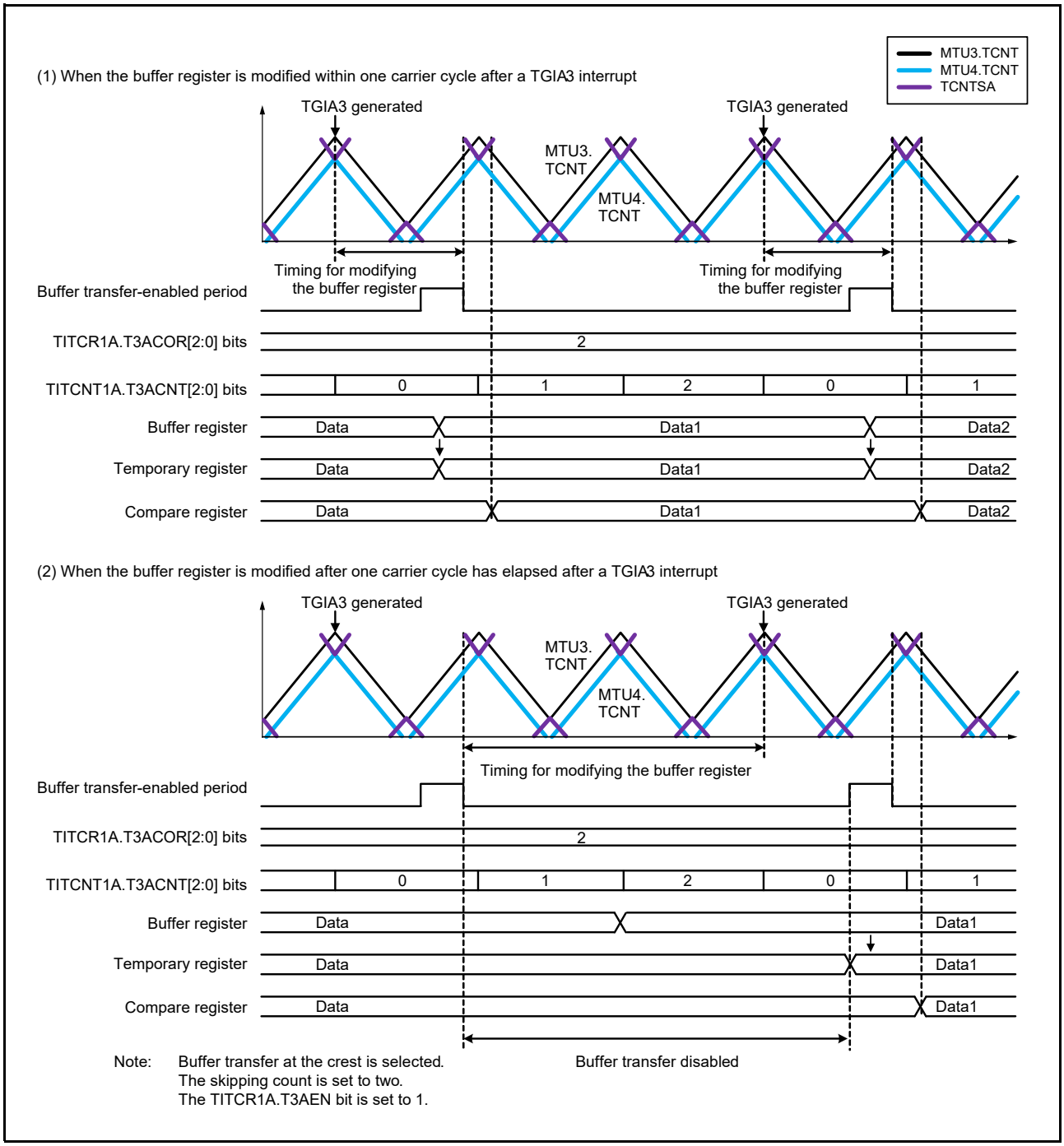

Note: Buffer transfer at the crest is selected.
The skipping count is set to two.
The TITCR1A.T3AEN bit is set to 1.

Figure 22.71 Example of Operation When Buffer Transfer is Linked with Interrupt Skipping (TBTER.BTE[1:0] = 10b)

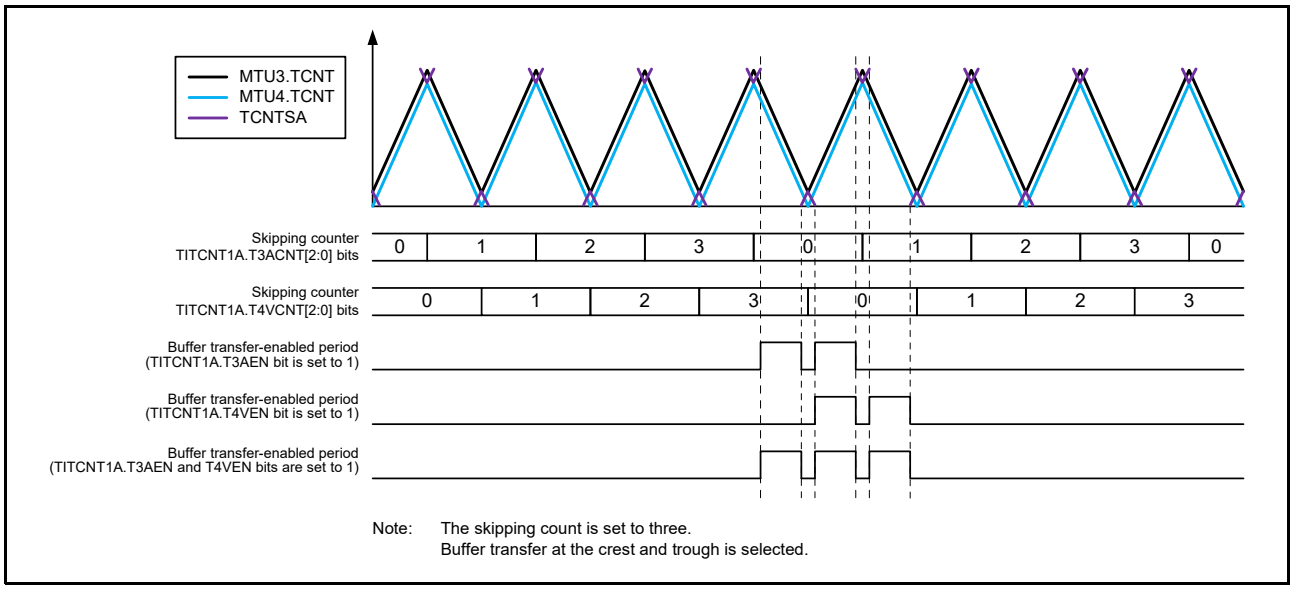

Figure 22.72 Relationship between Bits T3AEN and T4VEN in TITCR and Buffer Transfer-Enabled Period

(4) Complementary PWM Mode Output Protection Functions

The MTU provides the following protection functions for complementary PWM mode output.

(a) Register and Counter Miswrite Prevention Function

Access from the CPU to the mode registers, control registers, compare registers can be enabled or disabled by setting the TRWER.RWE bit. The applicable registers are some of the registers in MTU3 and MTU4 shown below:

22 registers in total

MTU3.TCR and MTU4.TCR, MTU3.TMDR and MTU4.TMDR, MTU3.TIORH and MTU4.TIORH, MTU3.TIORL and MTU4.TIORL, MTU3.TIER and MTU4.TIER, MTU3.TCNT and MTU4.TCNT, MTU3.TGRA and MTU4.TGRA, MTU3.TGRB and MTU4.TGRB, MTU.TOER, MTU.TOCR1, MTU.TOCR2, MTU.TGCR, MTU.TCDR, and MTU.TDDR

This function can disable CPU access to the mode registers, control registers, and counters to prevent miswriting due to CPU runaway. In the access-disabled state, the applicable registers are read as undefined and writing to these registers is ignored.

(b) Halting of PWM Output

The PWM output pins of MTU0, MTU3, and MTU4 can be set to the high-impedance state automatically.
Refer to section 23, Port Output Enable 2 (POE2a), for details.

22.3.9 A/D Conversion Start Request Delaying Function

A/D conversion start requests can be issued in MTU4 by making settings in registers TADCR, TADCORA, TADCORB, TADCOBRA, and TADCOBRB.

The A/D conversion start request delaying function compares the MTU4.TCNT counter with the MTU4.TADCORA or MTU4.TADCORB register, and when their values match, the function issues a respective A/D conversion start request (TRG4AN or TRG4BN).

A/D conversion start requests (TRG4AN and TRG4BN) can be skipped in coordination with interrupt skipping by making settings in the TADCR.ITA3AE bit, TADCR.ITA4VE bit, TADCR.ITB3AE bit, and ITB4VE bit.

(1) Example of Procedure for Specifying A/D Conversion Start Request Delaying Function

Figure 22.73 shows an example of procedure for specifying the A/D conversion start request delaying function.

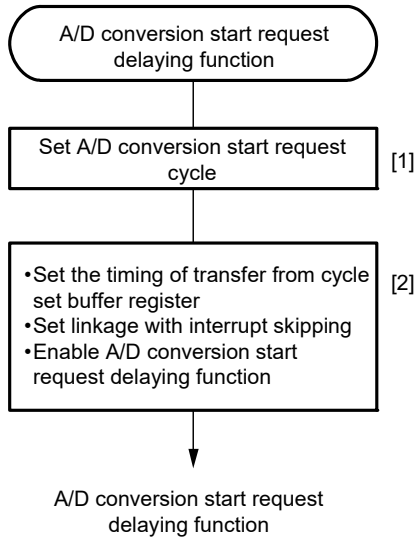

[1] Set the cycle in registers MTU4.TADCOBRA, MTU4.TADCOBRB, MTU4.TADCORA, and MTU4.TADCORB. (The same initial value must be specified in the cycle set buffer register and cycle set register.)

[2] Use the TADCR.BF[1:0] bits to specify the timing of buffer transfer from the timer A/D conversion start request cycle set buffer register to A/D conversion start request cycle set register.
- Specify whether to link with interrupt skipping through TADCR.ITA3AE bit, TADCR.ITA4VE bit, TADCR.ITB3AE bit, and TADCR.ITB4VE bit.
- Use TADCR.UT4AE bit, TADCR.DT4AE bit, TADCR.UT4BE bit, and TADCR.DT4BE bit to enable A/D conversion start requests (TRG4AN or TRG4BN).

Note: Perform the TADCR register setting while the MTU4.TCNT counter is stopped.
Set the TADCR.BF[1], ITA3AE, ITA4VE, ITB3AE, ITB4VE, DT4AE, and DT4BE bits to 0 when complementary PWM mode is not selected.
Set the ITA3AE, ITA4VE, ITB3AE, and ITB4VE bits to 0 when interrupt skipping is disabled.

Figure 22.73 Example of Procedure for Specifying A/D Conversion Start Request Delaying Function

(2) Basic Example of A/D Conversion Start Request Delaying Function Operation

Figure 22.74 shows a basic example of A/D conversion start request signal (TRG4AN) operation when the trough of the MTU4.TCNT counter is specified for the buffer transfer timing and an A/D conversion start request signal is output during MTU4.TCNT down-counting.

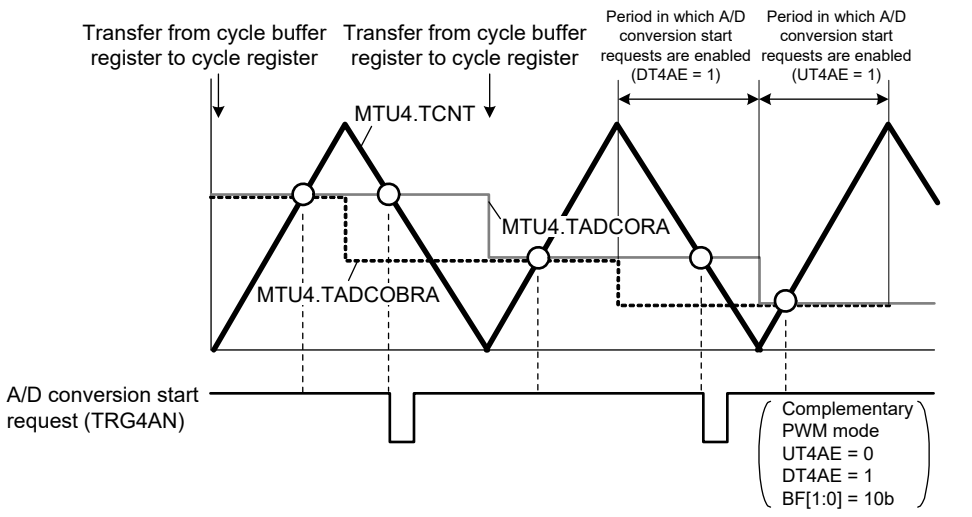

Period in which A/D conversion start requests are enabled (UT4AE = 1): 0 ≤ MTU4.TCNT ≤ TCDR – 1
Period in which A/D conversion start requests are enabled (DT4AE = 1): TCDR ≥ MTU4.TCNT ≥ 1

UT4AE, DT4AE, BF[1:0]: Bits in TADCR

Figure 22.74 Basic Example of A/D Conversion Start Request Signal (TRG4AN) Operation

(3) Period in Which A/D Conversion Start Requests are Enabled

When the MTU4.TCNT counter and the MTU4.TADCORA or MTU4.TADCORB register match within the period enabled by the UT4AE and UT4BE bits, the corresponding A/D conversion start request (TRG4AN or TRG4BN) is issued.

When the UT4AE and UT4BE bits in the MTU4.TADCR register are set to 1 in complementary PWM mode, A/D conversion start requests are enabled during the MTU4.TCNT up-counting (0 ≤ MTU4.TCNT ≤ TCDR – 1). When the DT4AE and DT4BE bits in the MTU4.TADCR register are set to 1, A/D conversion start requests are enabled during MTU4.TCNT down-counting (TCDR ≥ MTU4.TCNT ≥ 1). Refer to Figure 22.74.

(4) Buffer Transfer

The data in the timer A/D conversion start request cycle set registers (MTU4.TADCORA and MTU4.TADCORB) is updated by writing data to the timer A/D conversion start request cycle set buffer registers (MTU4.TADCOBRA and MTU4.TADCOBRB). Data is transferred from the buffer registers to the respective cycle set registers at the timing selected with the MTU4.TADCR.BF[1:0] bits.

There are notes on the timing for transferring data when using buffer transfer in complementary PWM mode.

For details, section 22.6.27, Usage Notes on A/D Conversion Start Request Delaying Function in Complementary PWM Mode.

In modes other than complementary PWM mode, set the BF[1] bit in the MTU4.TADCR register to 0.

(5) A/D Conversion Start Request Delaying Function Linked with Interrupt Skipping

In complementary PWM mode, A/D conversion start requests (TRG4AN and TRG4BN) can be issued in coordination with interrupt skipping by making settings in the TADCR.ITA3AE bit, TADCR.ITA4VE bit, TADCR.ITB3AE bit, and TADCR.ITB4VE bit. Figure 22.75 shows an example of A/D conversion start request signal (TRG4AN) operation when TRG4AN output is enabled during MTU4.TCNT up-counting and down-counting and A/D conversion start requests are linked with interrupt skipping.

Figure 22.76 shows another example of A/D conversion start request signal (TRG4AN) operation when TRG4AN output is enabled during MTU4.TCNT up-counting and A/D conversion start requests are linked with interrupt skipping.

In modes other than complementary PWM mode, do not use the A/D conversion start request delaying function linked with interrupt skipping.

Set the ITA3AE, ITA4VE, ITB3AE, and ITB4VE bits in the MTU4.TADCR register to 0.

Note: This function should be used in combination with interrupt skipping.
When interrupt skipping is disabled (the TITCR.T3AEN bit and TITCR.T4VEN bit are set to 0 or the skipping count setting bits (T3ACOR[2:0] and T4VCOR[2:0]) in the TITCR register are set to 000b), make sure that A/D conversion start requests are not linked with interrupt skipping (set the TADCR.ITA3AE bit, TADCR.ITA4VE bit, TADCR.ITB3AE bit, and TADCR.ITB4VE bit to 0).
Note that TRG4ABN (TRG4AN or TRG4BN) is output as the A/D conversion start request signal in this case.
When this function is used, registers MTU4.TADCORA and MTU4.TADCORB should be set with the value ranging 0002h to the value set in the TCDR register minus 2.

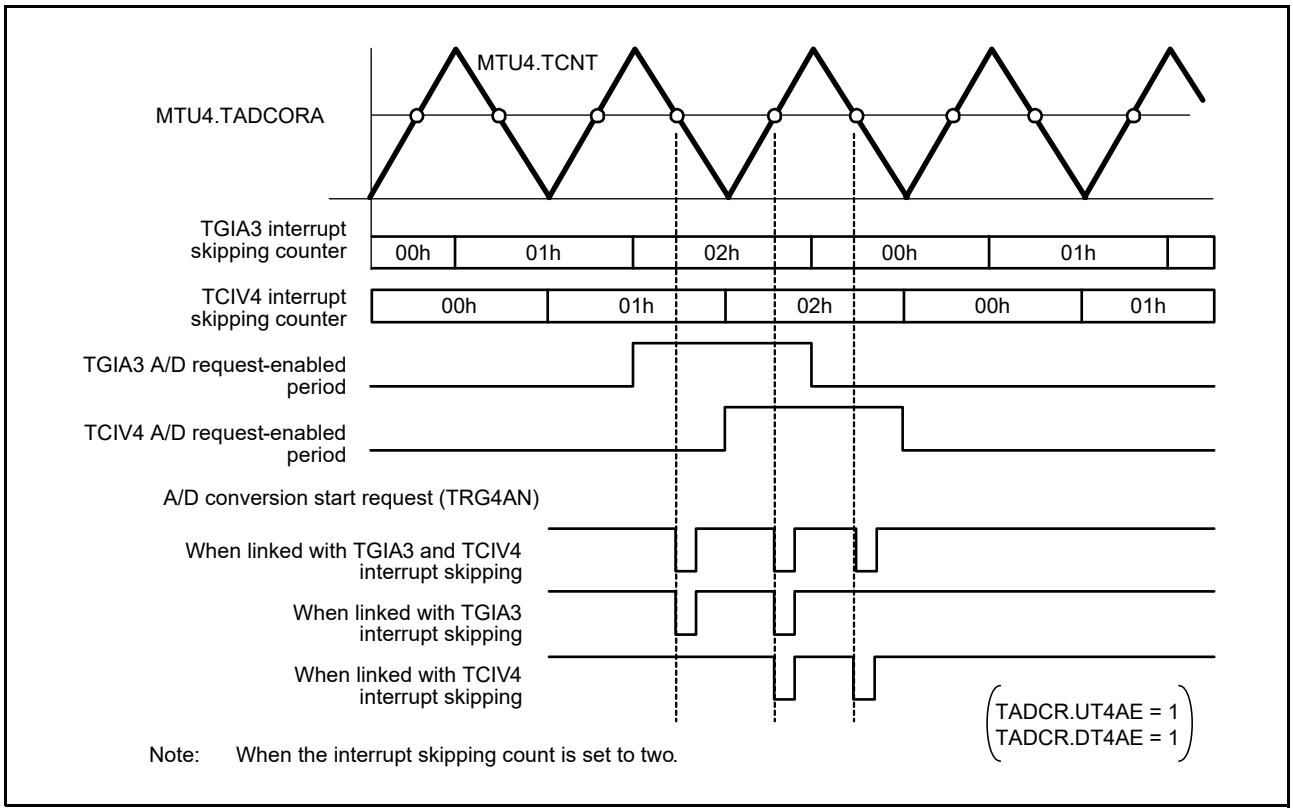

Figure 22.75 Example of A/D Conversion Start Request Signal (TRG4AN) Operation Linked with Interrupt Skipping (when the output of TRG4AN in counting up and down by TCNT is enabled)

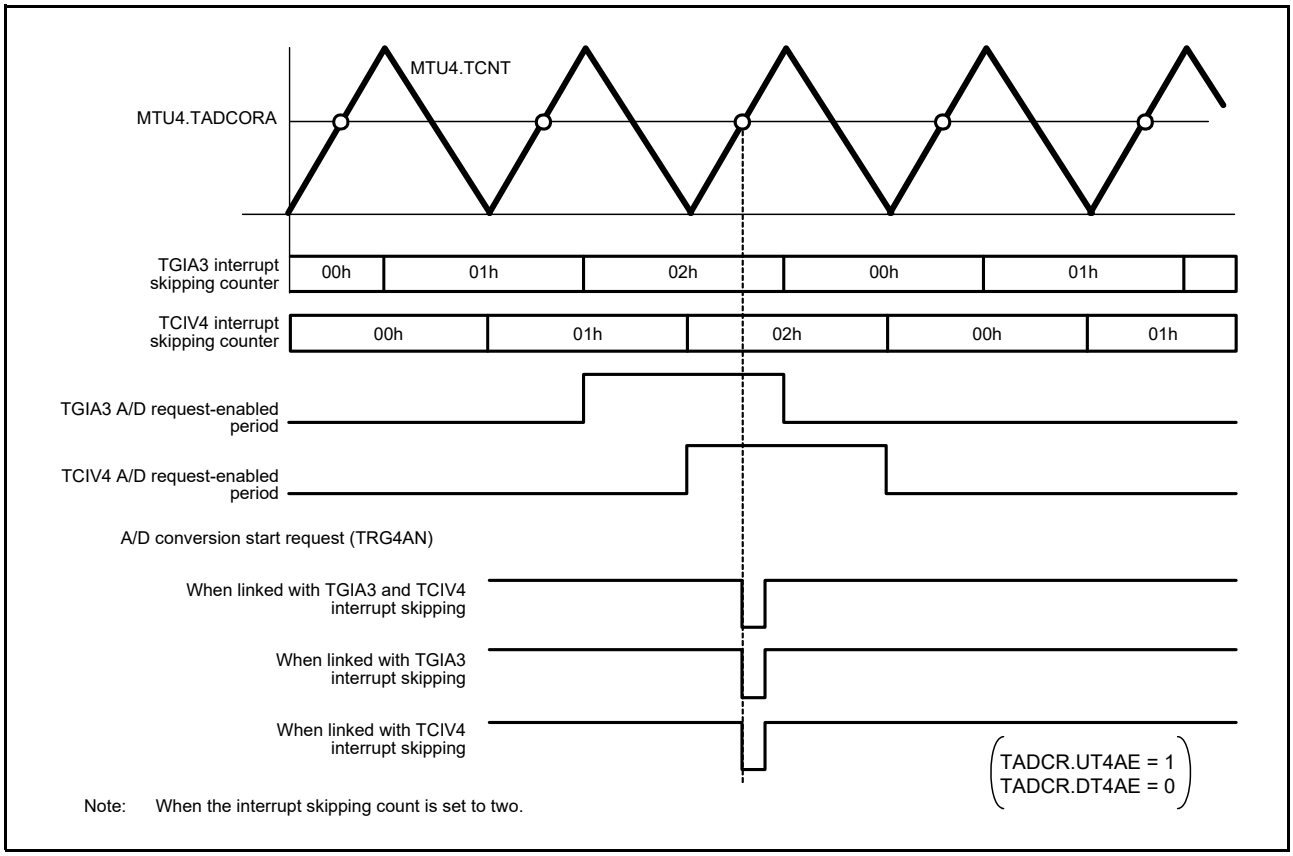

Figure 22.76 Example of A/D Conversion Start Request Signal (TRG4AN) Operation Linked with Interrupt Skipping (when the output of TRG4AN in counting up by TCNT is enabled)

22.3.10 External Pulse Width Measurement

Up to three external pulse widths can be measured in MTU5.
When the IOC[4:0] bits in MTU5.TIORU, TIORV, and TIORW are set for pulse width measurement, the pulse width of the signal input to the MTIC5U, MTIC5V, and MTIC5W pins is measured. Counters TCNTU, TCNTV, and TCNTW count up while the level specified by the IOC[4:0] bits is input.
Figure 22.77 shows an example of setting external pulse width measurement, and Figure 22.78 an example of external pulse width measurement.

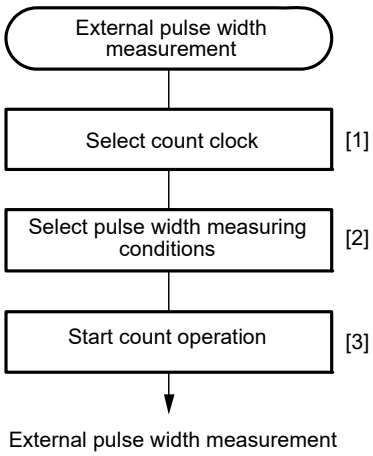

[1] Set the TCR.TPSC[1:0] bits to select the count clock.

[2] In the TIOR register, select the high level or low level for the pulse width measuring condition.

[3] Set the TSTR.CSTn bit to 1 to start count operation.

Note: Do not set the TCNTCMPCLR.CMPCLR5m bit to 1.
Note: Do not set the MTU5.TIER.TGIE5m bit to 1.
Note: The value in the TCNT counter is not captured in the TGR register.
m = U, V, W

Figure 22.77 Example of External Pulse Width Measurement Setting Procedure

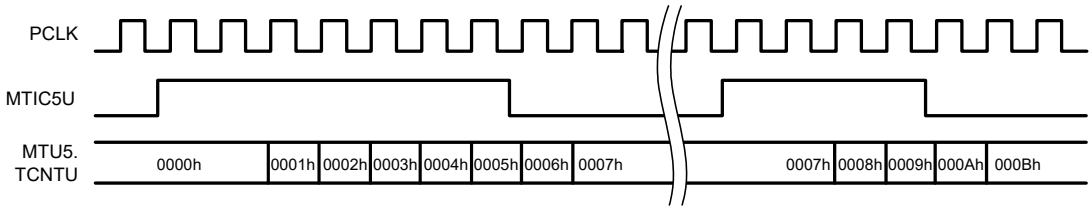

Figure 22.78 Example of External Pulse Width Measurement (Measuring High Pulse Width)

22.3.11 Dead Time Compensation

A dead time delay (a propagation delay of the inverter output from the complementary PWM output) can be compensated by combining MTU5 with MTU3 and MTU4. Figure 22.79 shows an example of the motor control circuit compensating a dead time delay by combining MTU5 with MTU3 and MTU4. A dead time for the PWM output waveform during complementary PWM operation using MTU3 and MTU4 can be compensated by adjusting a duty ratio set in a compare register for the PWM output after measuring a delay of the inverter output from the complementary PWM output by an external pulse measurement function for MTU5 (Figure 22.80). Figure 22.81 shows the procedure for setting dead time compensation using MTU3 to MTU5. For details on MTU5 operation at this time, refer to (2) TCNTU, TCNTV, and TCNTW Capture at Crest and/or Trough in Complementary PWM Mode Operation.

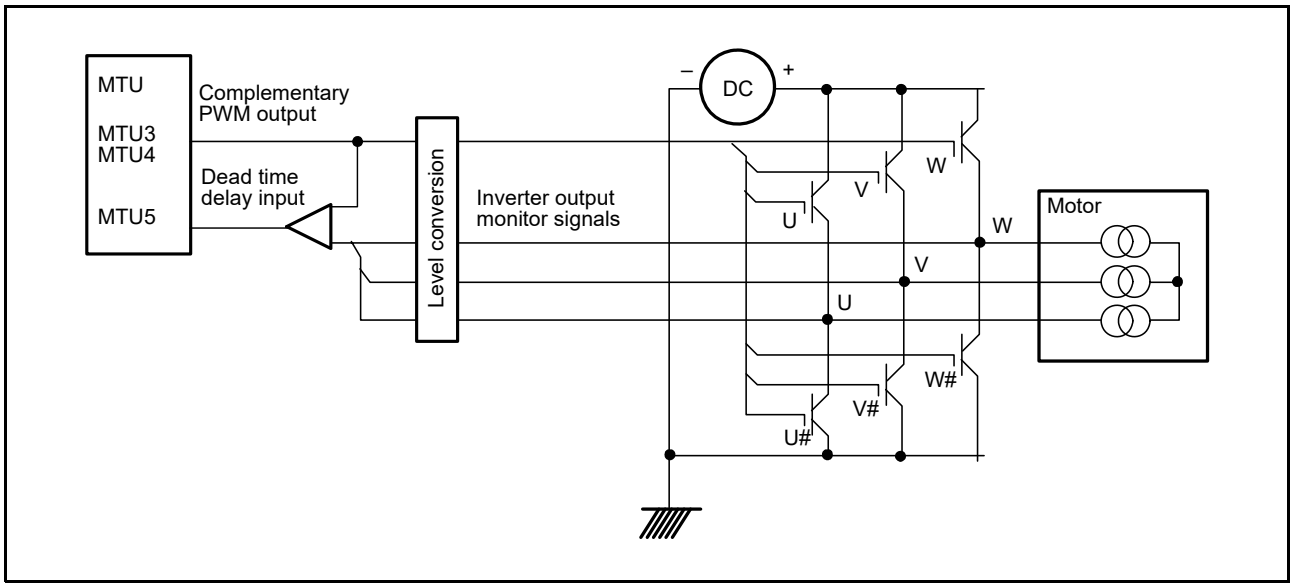

Figure 22.79 Example of Motor Control Circuit Configuration

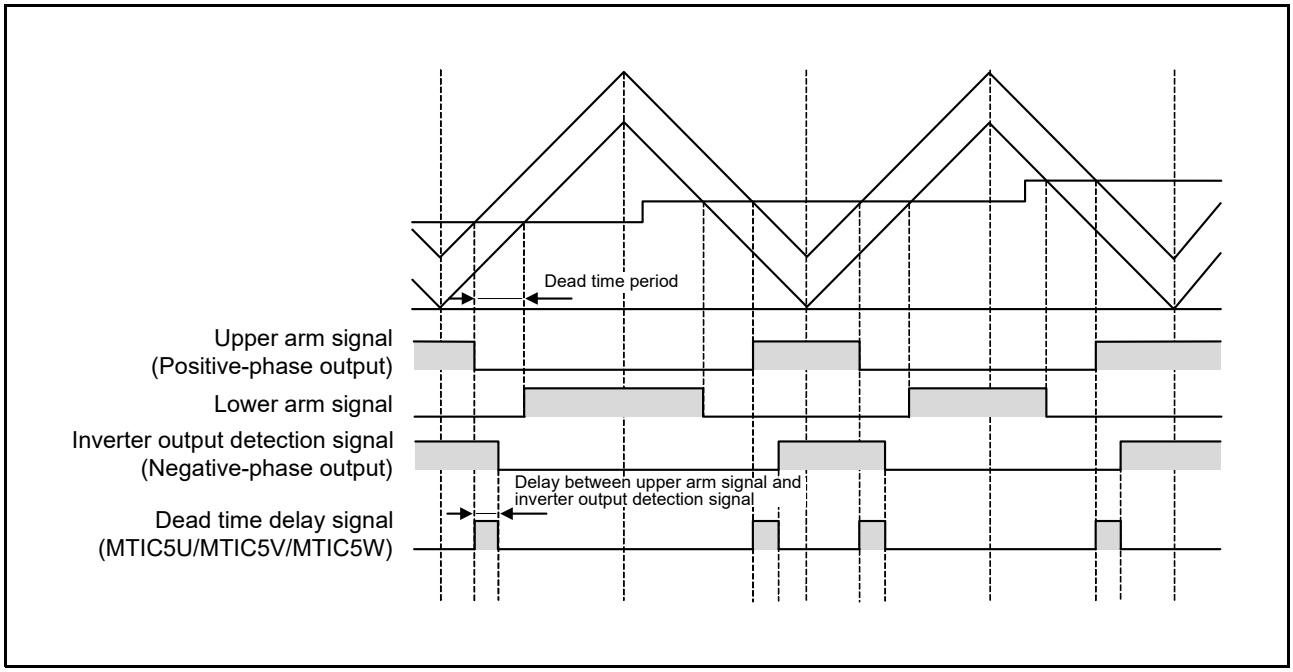

Figure 22.80 Delay in Dead Time in Complementary PWM Mode Operation

(1) Example of Dead Time Compensation Setting Procedure

Figure 22.81 shows an example of dead time compensation setting procedure by using three counters in MTU5.

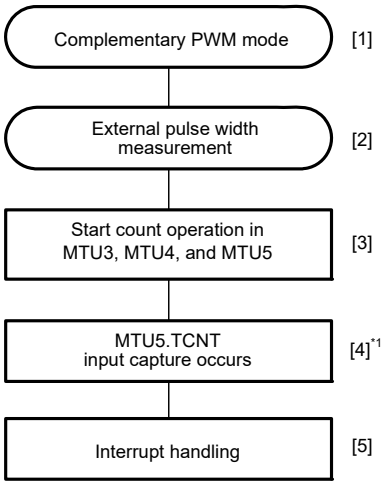

[1] Place MTU3 and MTU4 in complementary PWM mode. For details, refer to the Complementary PWM Mode section.

[2] Specify the external pulse width measurement function for the target MTU5.TIOR register. For details, refer to the External Pulse Width Measurement section.

[3] Set bits CST3 and CST4 in the MTU.TSTR register and bits CSTU5, CSTV5, and CSTW5 in the MTU5.TSTR register to 1 to start count operation.

[4] When the capture condition specified in the TIOR register is satisfied, the MTU5.TCNT counter value is captured in the MTU5.TGR register.

[5] For U-phase dead time compensation, when an interrupt is generated at the crest (TGIA3) or trough (TCIV4) in complementary PWM mode, read the MTU5.TGRU register value, calculate the difference in time between registers MTU5.TGRU and MTU3.TGRB, and write the corrected value to the MTU3.TGRD register in the interrupt handling.
For the V-phase and W-phase, read the MTU5.TGRV and MTU5.TGRW register values and write the corrected values to registers MTU4.TGRC and MTU4.TGRD, respectively, in the same way as for U-phase compensation.
The MTU5.TCNT counter value should be cleared through the TCNTCMPCLR register setting or by software.

Note 1. As an interrupt flag is set under the capture condition specified in the TIOR register, do not enable interrupt requests in the MTU5.TIER register.

Figure 22.81 Example of Dead Time Compensation Setting Procedure

(2) TCNTU, TCNTV, and TCNTW Capture at Crest and/or Trough in Complementary PWM Mode Operation

The MTU5 external pulse width measurement function allows to transfer the value in counters TCNTU, TCNTV, and TCNTW to registers TGRU, TGRV, and TGRW at the crest, trough, or crest and trough when MTU3 and MTU4 operate in complementary PWM mode. The transfer timing should be set in registers TIORU, TIORV, and TIORW. When the TCNTCMPCLR.CMPCLR5U, CMPCLR5V, and CMPCLR5W bits are set to 1, counters TCNTU, TCNTV, and TCNTW become 0 at the transfer timing for registers TGRU, TGRV, and TGRW.

Figure 22.82 shows an operation example in which the TCNTU counter is used as a free-running counter without being cleared, and the value is captured in the TGRU register at the crest and though in complementary PWM mode.

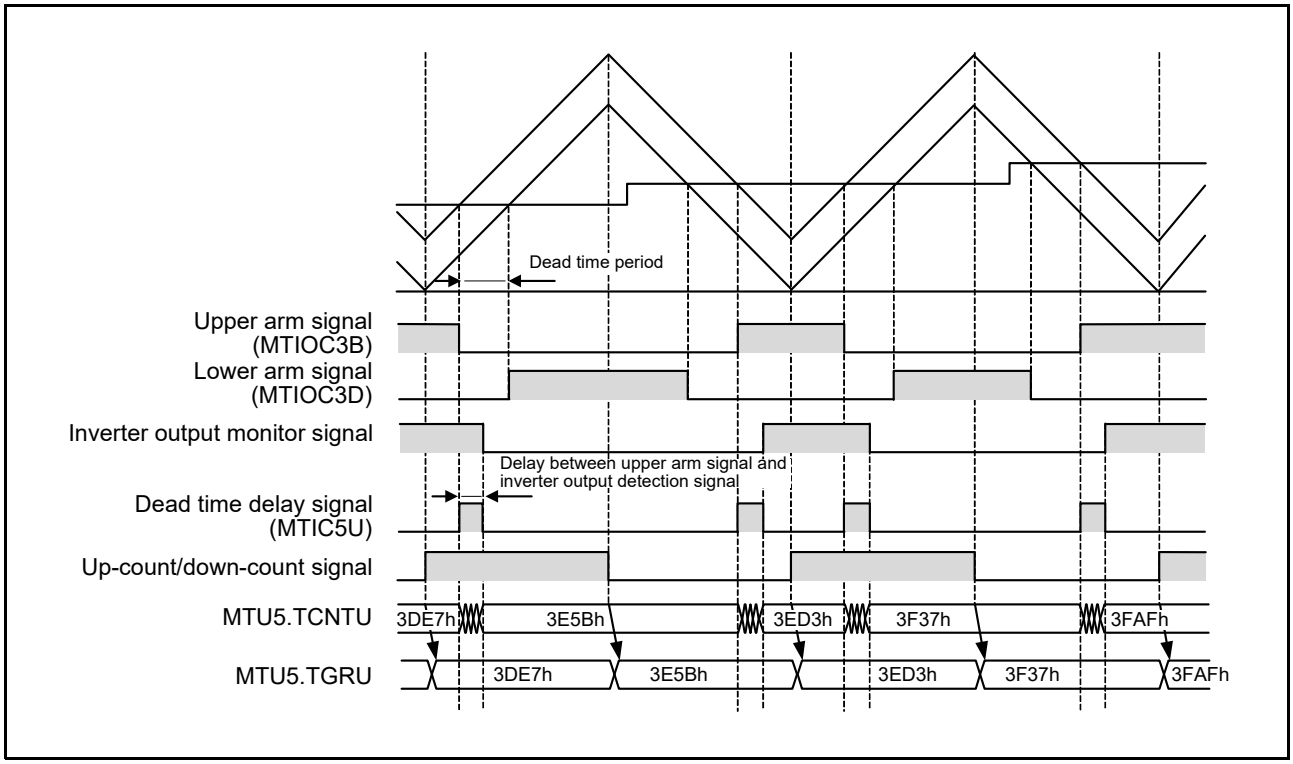

Figure 22.82 MTU5.TCNT Capture at Crest and Trough in Complementary PWM Mode Operation

22.3.12 Noise Filter

Each pin for use in input capture and external pulse input to the MTU is equipped with a noise filter. The noise filter samples input signals at the sampling clock and removes the pulses of which length is less than three sampling cycles. The noise filter functionality includes enabling and disabling of the noise filter for each pin and setting of the sampling clock for each channel. Figure 22.83 shows the timing of noise filtering.

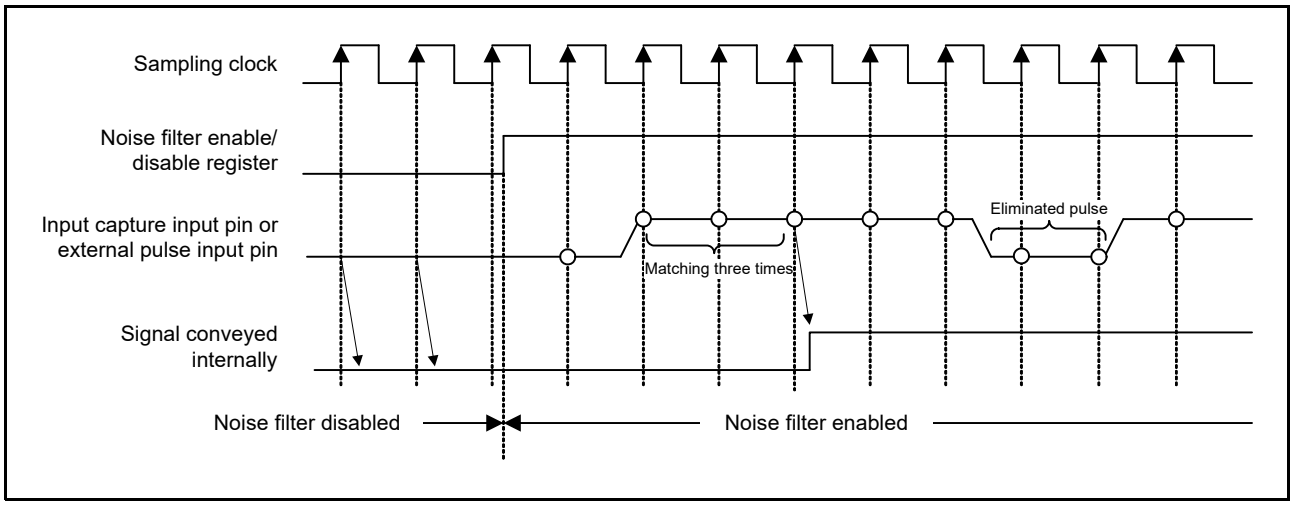

Figure 22.83 Timing of Noise Filtering

22.4 Interrupt Sources

22.4.1 Interrupt Sources and Priorities

There are three interrupt sources; the TGR input capture/compare match, the TCNT counter overflow, and the TCNT counter underflow. Each interrupt source has its own enable/disable bit, allowing the generation of interrupt request signals to be enabled or disabled individually.

When an interrupt source is detected, an interrupt is requested if the corresponding enable/disable bit in the TIER register is set to 1.

Relative channel priorities can be changed by the interrupt controller; however the priority within a channel is fixed. For details, refer to section 14, Interrupt Controller (ICUb).

Table 22.57 lists the MTU interrupt sources.

Table 22.57 MTU Interrupt Sources (1)

Channel	Name	Interrupt Source	DMAC Activation	DTC Activation	Priority
MTU0	TGIA0	MTU0.TGRA input capture/compare match	Possible	Possible	High
	TGIB0	MTU0.TGRB input capture/compare match	Not possible	Possible	↑
	TGIC0	MTU0.TGRC input capture/compare match	Not possible	Possible	
	TGID0	MTU0.TGRD input capture/compare match	Not possible	Possible	
	TCIV0	MTU0.TCNT overflow	Not possible	Not possible	
	TGIE0	MTU0.TGRE compare match	Not possible	Not possible	
	TGIF0	MTU0.TGRF compare match	Not possible	Not possible	
MTU1	TGIA1	MTU1.TGRA input capture/compare match	Possible	Possible	
	TGIB1	MTU1.TGRB input capture/compare match	Not possible	Possible	
	TCIV1	MTU1.TCNT overflow	Not possible	Not possible	
	TCIU1	MTU1.TCNT underflow	Not possible	Not possible	
MTU2	TGIA2	MTU2.TGRA input capture/compare match	Possible	Possible	
	TGIB2	MTU2.TGRB input capture/compare match	Not possible	Possible	
	TCIV2	MTU2.TCNT overflow	Not possible	Not possible	
	TCIU2	MTU2.TCNT underflow	Not possible	Not possible	
MTU3	TGIA3	MTU3.TGRA input capture/compare match	Possible	Possible	
	TGIB3	MTU3.TGRB input capture/compare match	Not possible	Possible	
	TGIC3	MTU3.TGRC input capture/compare match	Not possible	Possible	
	TGID3	MTU3.TGRD input capture/compare match	Not possible	Possible	
	TCIV3	MTU3.TCNT overflow	Not possible	Not possible	
MTU4	TGIA4	MTU4.TGRA input capture/compare match	Possible	Possible	
	TGIB4	MTU4.TGRB input capture/compare match	Not possible	Possible	
	TGIC4	MTU4.TGRC input capture/compare match	Not possible	Possible	
	TGID4	MTU4.TGRD input capture/compare match	Not possible	Possible	
	TCIV4	MTU4.TCNT overflow/underflow	Not possible	Possible	
MTU5	TGIU5	MTU5.TGRU input capture/compare match	Not possible	Possible	
	TGIV5	MTU5.TGRV input capture/compare match	Not possible	Possible	
	TGIW5	MTU5.TGRW input capture/compare match	Not possible	Possible	Low

Note: This table lists the initial state immediately after a reset. The relative channel priorities can be changed by the interrupt controller.

(1) Input Capture/Compare Match Interrupt

An interrupt is requested if the TIER.TGIE bit is set to 1 when a TGR input capture/compare match occurs on a channel. The MTU has 21 input capture/compare match interrupts (six for MTU0, four each for MTU3 and MTU4, two each for MTU1 and MTU2, and three for MTU5).

(2) Overflow Interrupt

An interrupt is requested if the TIER.TGIE bit is set to 1 when a TCNT counter overflow occurs on a channel. The MTU has five overflow interrupts (one for each channel).

(3) Underflow Interrupt

An interrupt is requested if the TIER.TCIEU bit is set to 1 when a TCNT counter underflow occurs on a channel. The MTU has two underflow interrupts (one each for MTU1 and MTU2).

22.4.2 DTC/DMAC Trigger Sources

(1) DTC Trigger Sources

The DTC can be triggered by the TGR input capture/compare match interrupt in each channel or the overflow interrupt in MTU4. For details, refer to section 18, Data Transfer Controller (DTCa).
The MTU provides a total of 20 input capture/compare match interrupts and overflow interrupts that can be used as DTC trigger sources: four each for MTU0 and MTU3, two each for MTU1 and MTU2, five for MTU4, and three for MTU5.

(2) DMAC Trigger Sources

The DMAC can be triggered by the TGRA register input capture/compare match interrupt in each channel. For details, refer to section 17, DMA Controller (DMACA).
The MTU provides a total of five input capture/compare match interrupts that can be used as DMAC trigger sources: one each for MTU0 to MTU4.
If a DMA transfer is initiated by the MTU, the trigger signal is cleared when the DMAC requests the internal bus mastership. Therefore, there may be a wait period before DMA transfer starts even when the trigger source is cleared, depending on the internal bus state.

22.4.3 A/D Converter Trigger Source

The A/D converter can be triggered by one of the following five methods in the MTU. Table 22.58 lists the relationship between interrupt sources and A/D conversion start request signals.

(1) A/D Conversion Start by TGRA Input Capture/Compare Match or at MTU4.TCNT Trough in Complementary PWM Mode

The A/D converter can be triggered by the occurrence of a TGRA input capture/compare match in each channel. In addition, if complementary PWM mode operation is performed while the MTU4.TIER.TTGE2 bit is set to 1, the A/D converter can be triggered at the trough of MTU4.TCNT count (MTU4.TCNT = 0000h).
A/D conversion start request signal TRGAN is issued to the A/D converter under either of the following conditions.

- When a TGRA input capture/compare match occurs on a channel while the TIER.TTGE bit is set to 1
- When the MTU4.TCNT count reaches the trough (MTU4.TCNT = 0000h) during complementary PWM mode operation while the MTU4.TIER.TTGE2 bit is set to 1

When either condition is satisfied, if A/D conversion start signal TRGAN from the MTU is selected as the trigger in the A/D converter, A/D conversion will start.

(2) A/D Conversion Start by Compare Match between MTU0.TCNT and MTU0.TGRE

A compare match between the MTU0.TCNT counter and the MTU0.TGRE register starts the A/D conversion.
A/D conversion start request signal TRG0EN is issued when a compare match occurs between the MTU0.TCNT counter and the MTU0.TGRE register. If A/D conversion start signal TRG0EN from the MTU is selected as the trigger in the A/D converter, A/D conversion will start.

(3) A/D Conversion Start by Compare Match between MTU0.TCNT and MTU0.TGRF

An input capture or compare match between the MTU0.TCNT counter and the MTU0.TGRA or MTU0.TGRB register starts the A/D conversion.
A compare match between the MTU0.TCNT counter and the MTU0.TGRF register starts the A/D conversion.
A/D conversion start request signal TRG0FN is issued when a compare match occurs between the MTU0.TCNT counter and the MTU0.TGRF register. If A/D conversion start signal TRG0FN from the MTU is selected as the trigger in the A/D converter, A/D conversion will start.

(4) A/D Conversion Start by Input Capture or Compare Match with MTU0.TGRA or TGRB

The A/D converter can be triggered when an input capture or compare match occurs between the MTU0.TCNT counter and the MTU0.TGRA or MTU0.TGRB register.
When an input capture or compare match occurs between the MTU0.TCNT counter and the MTU0.TGRA or MTU0.TGRB register. A/D conversion start request signal TRG0AN or TRG0BN is issued. If A/D conversion start signal TRG0AN or TRG0BN from the MTU is selected as the trigger in the A/D converter, A/D conversion will start.

(5) A/D Conversion Start by A/D Conversion Start Request Delaying Function

The A/D converter can be triggered by generating A/D conversion start request signal TRG4AN or TRG4BN when the MTU4.TCNT count matches the TADCORA or TADCORB register value if the TADCR.UT4AE bit, TADCR.DT4AE bit, TADCR.UT4BE bit, or TADCR.DT4BE bit is set to 1. For details, refer to section 22.3.9, A/D Conversion Start Request Delaying Function.
A/D conversion will start if A/D conversion start signal TRG4ABN from the MTU is selected as the trigger in the A/D converter when TRG4AN or TRG4BN is generated.

Table 22.58 Interrupt Sources and A/D Conversion Start Request Signals

Target Registers	A/D Conversion Start Request Source	A/D Conversion Start Request Signal
MTU0.TGRA and MTU0.TCNT	Input capture/compare match	TRGAN
MTU1.TGRA and MTU1.TCNT		
MTU2.TGRA and MTU2.TCNT		
MTU3.TGRA and MTU3.TCNT		
MTU4.TGRA and MTU4.TCNT		
MTU4.TCNT	MTU4.TCNT trough in complementary PWM mode	
MTU0.TGRA and MTU0.TCNT	Input capture/compare match	TRG0AN
MTU0.TGRB and MTU0.TCNT		TRG0BN
MTU0.TGRE and MTU0.TCNT	Compare match	TRG0EN
MTU0.TGRF and MTU0.TCNT		TRG0FN
TADCORA and MTU4.TCNT		TRG4AN
TADCORB and MTU4.TCNT		TRG4BN
TADCORA and MTU4.TCNT or TADCORB and MTU4.TCNT		TRG4ABN

22.5 Operation Timing

22.5.1 Input/Output Timing

(1) TCNT Count Timing

Figure 22.84 and Figure 22.85 show the TCNT count timing for TGI interrupt in internal clock operation, Figure 22.86 shows the TCNT count timing in external clock operation (normal mode), and Figure 22.87 shows the TCNT count timing in external clock operation (phase counting mode).

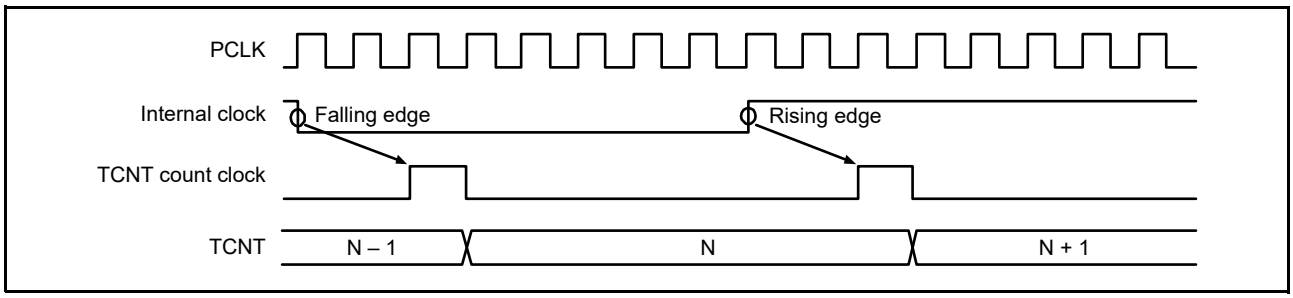

Figure 22.84 Count Timing in Internal Clock Operation (MTU0 to MTU4)

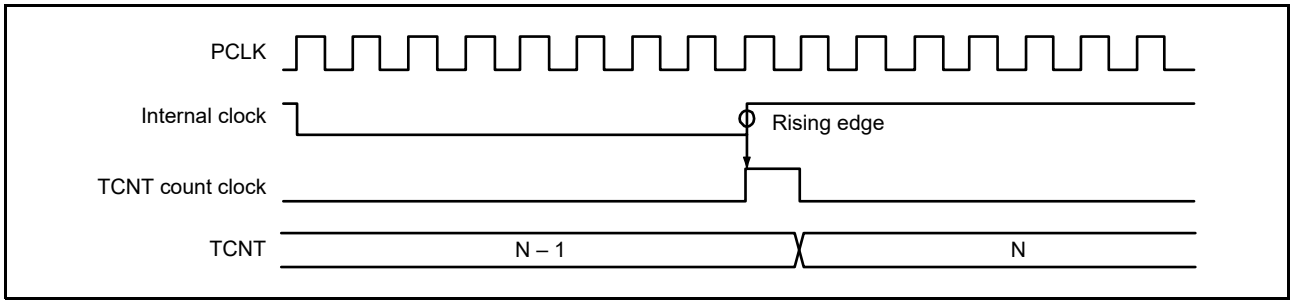

Figure 22.85 Count Timing in Internal Clock Operation (MTU5)

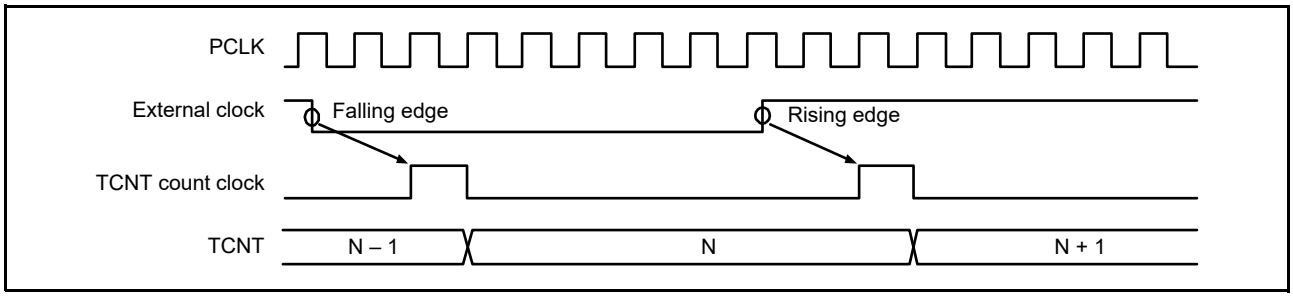

Figure 22.86 Count Timing in External Clock Operation (MTU0 to MTU4)

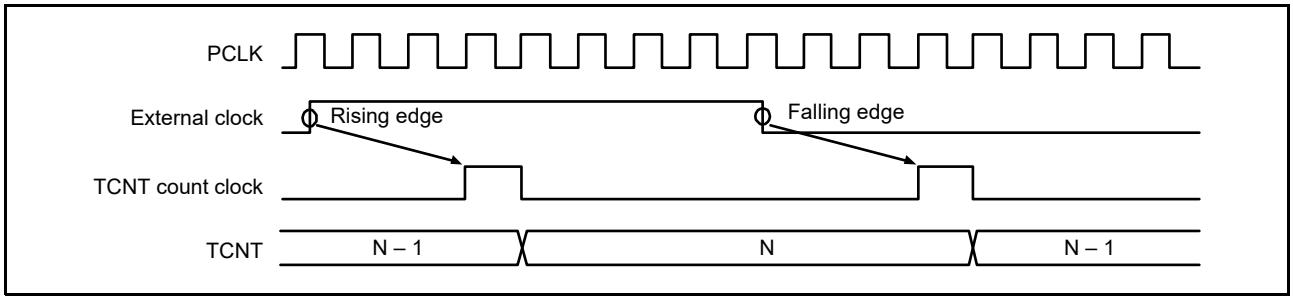

Figure 22.87 Count Timing in External Clock Operation (Phase Counting Mode)

(2) Output Compare Output Timing

A compare match signal is generated in the final state in which the TCNT counter and the TGR register match (the point at which the count value matched is updated by the TCNT counter). When a compare match signal is generated, the value set in the TIOR register is output to the output compare output pin (MTIOC pin). After a match between the TCNT counter and the TGR register, the compare match signal is not generated until the TCNT count clock is generated. Figure 22.88 shows the output compare output timing (normal mode or PWM mode) and Figure 22.89 shows the output compare output timing (complementary PWM mode or reset-synchronized PWM mode).

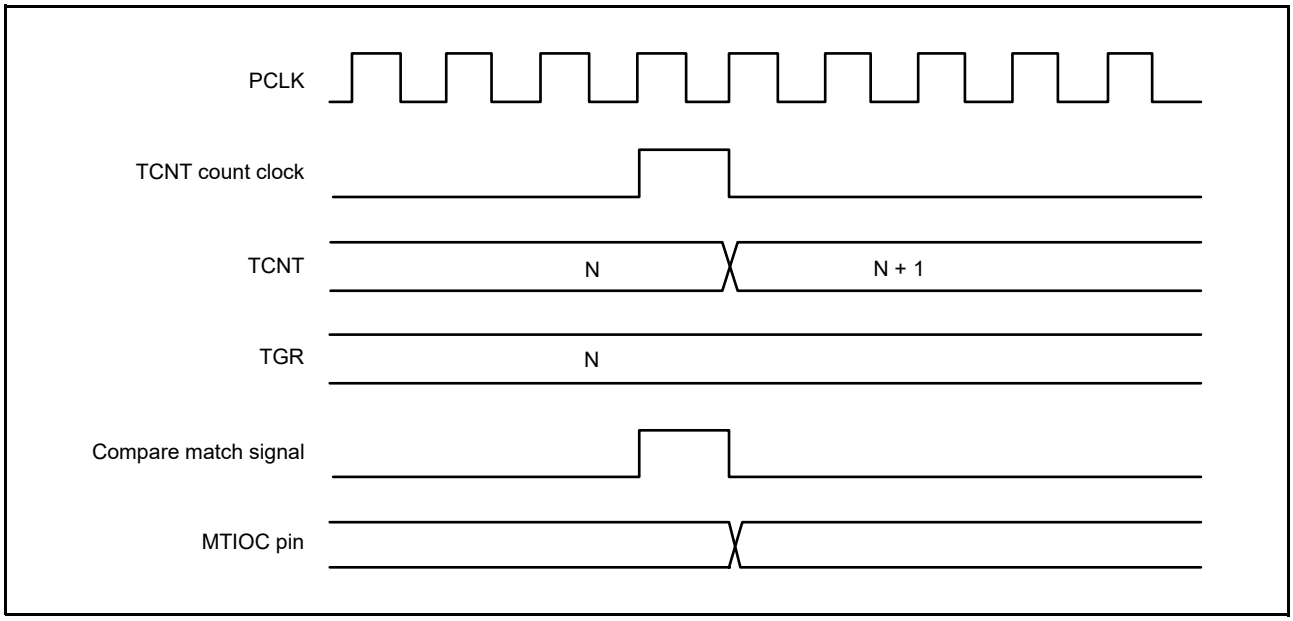

Figure 22.88 Output Compare Output Timing (Normal Mode or PWM Mode)

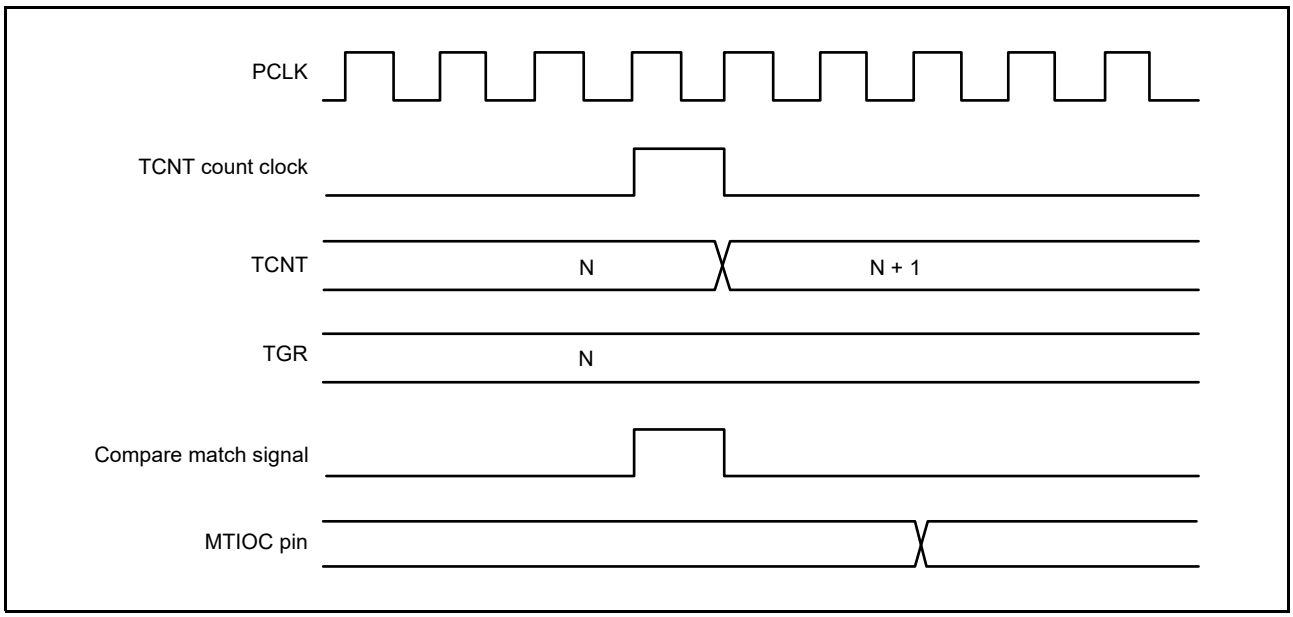

Figure 22.89 Output Compare Output Timing (Complementary PWM Mode or Reset-Synchronized PWM Mode)

(3) Input Capture Signal Timing

Figure 22.90 shows the input capture signal timing.

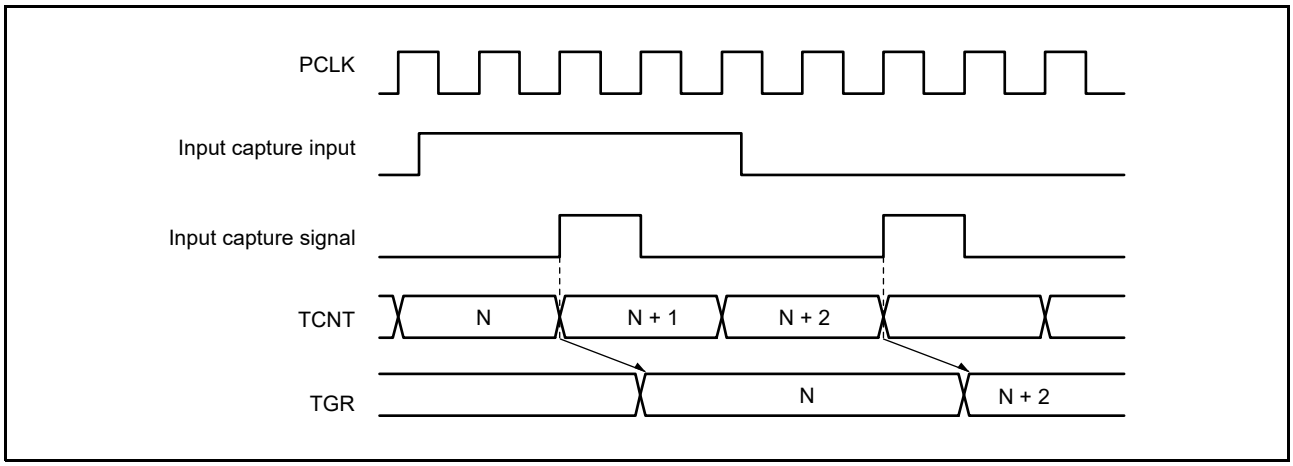

Figure 22.90 Input Capture Input Signal Timing

(4) Timing for Counter Clearing by Compare Match/Input Capture

Figure 22.91 and Figure 22.92 show the timing when counter clearing on compare match is specified, and Figure 22.93 shows the timing when counter clearing on input capture is specified.

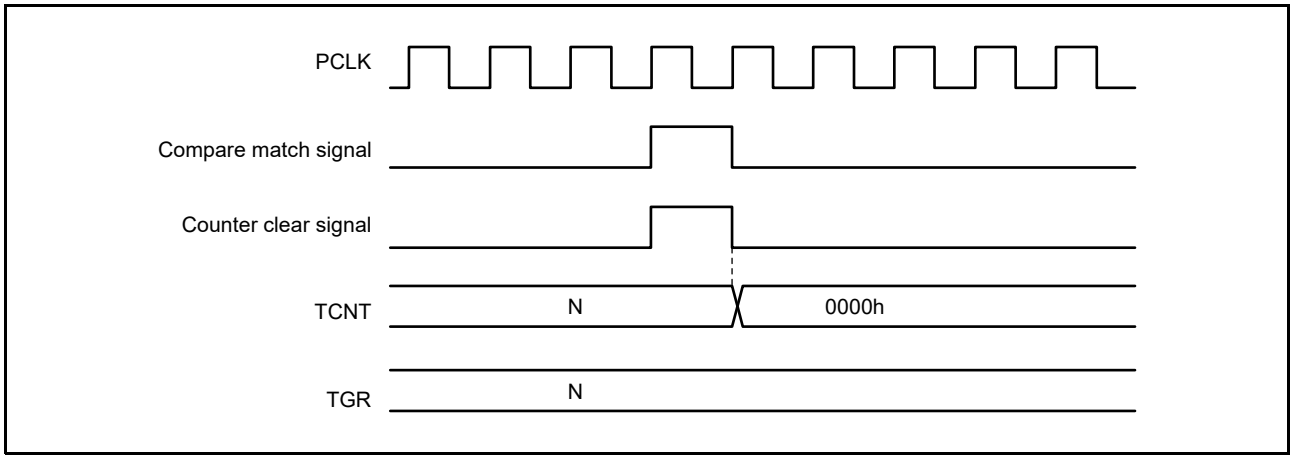

Figure 22.91 Counter Clear Timing (Compare Match) (MTU0 to MTU4)

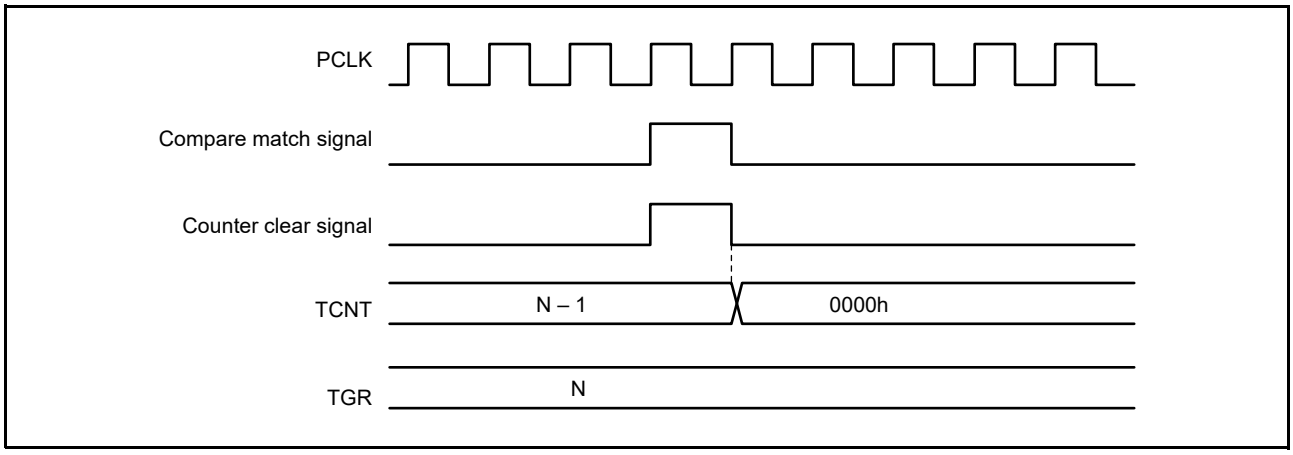

Figure 22.92 Counter Clear Timing (Compare Match) (MTU5)

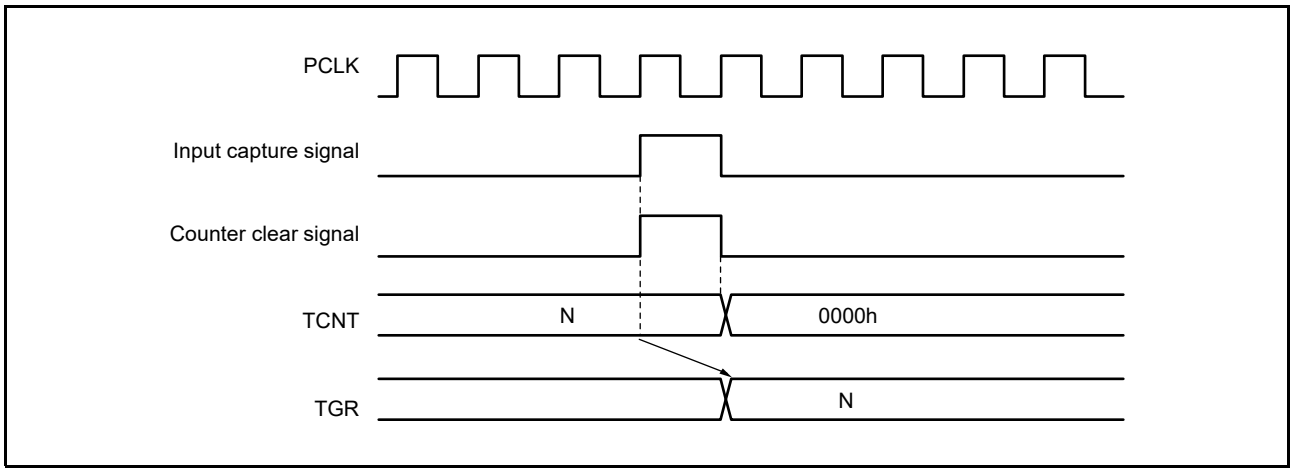

Figure 22.93 Counter Clear Timing (Input Capture) (MTU0 to MTU5)

(5) Buffer Operation Timing

Figure 22.94 to Figure 22.96 show the timing in buffer operation.

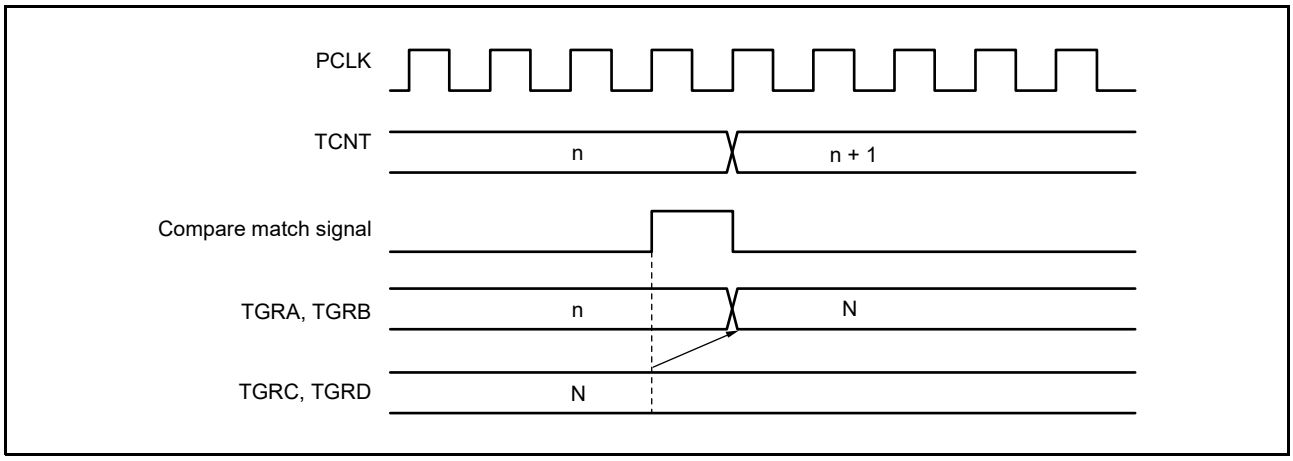

Figure 22.94 Buffer Operation Timing (Compare Match)

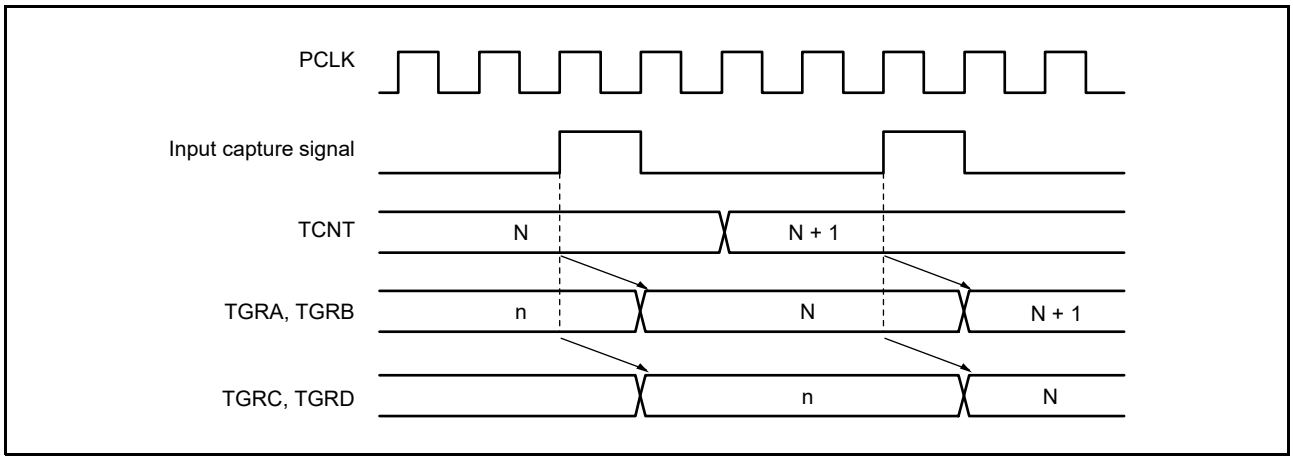

Figure 22.95 Buffer Operation Timing (Input Capture)

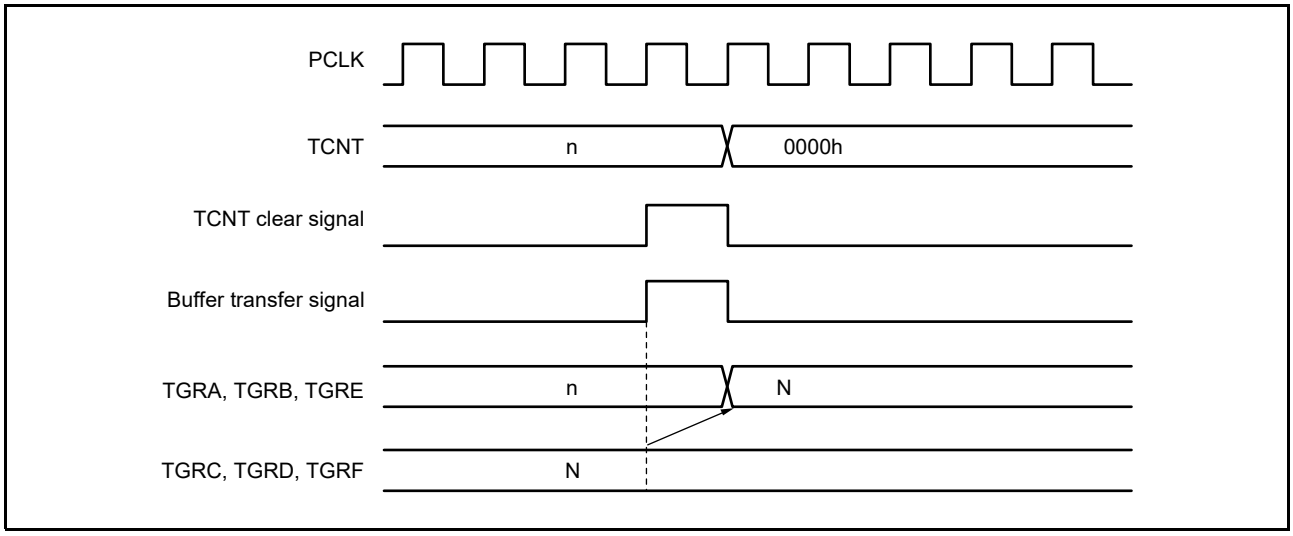

Figure 22.96 Buffer Operation Timing (When TCNT Cleared)

(6) Buffer Transfer Timing (Complementary PWM Mode)

Figure 22.97 to Figure 22.99 show the buffer transfer timing in complementary PWM mode.

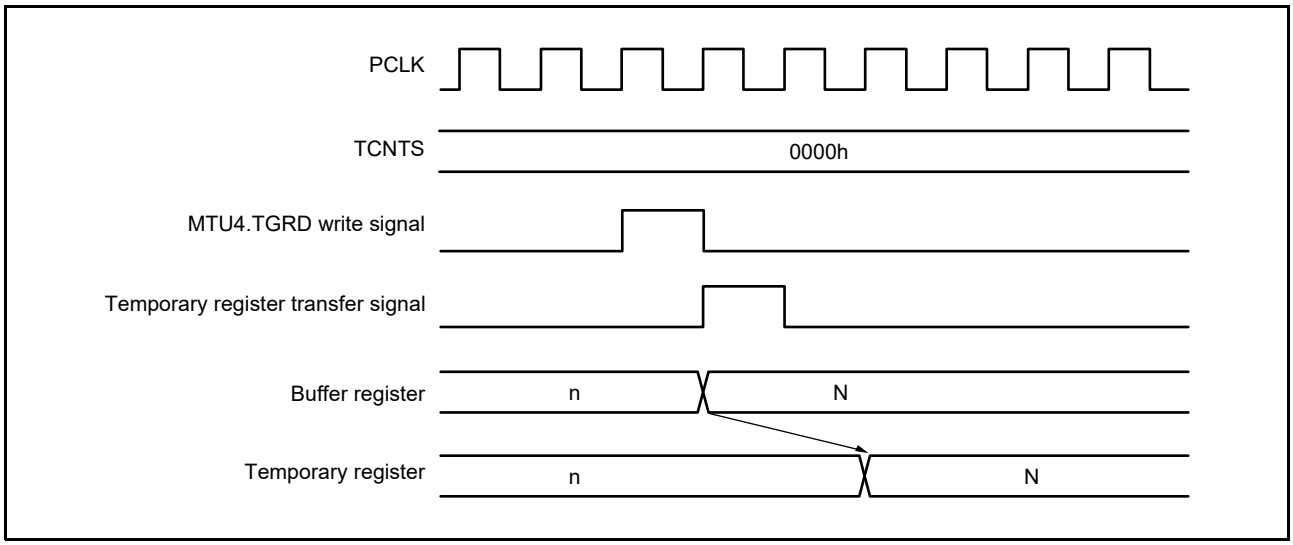

Figure 22.97 Transfer Timing from Buffer Register to Temporary Register (TCNTS Stop)

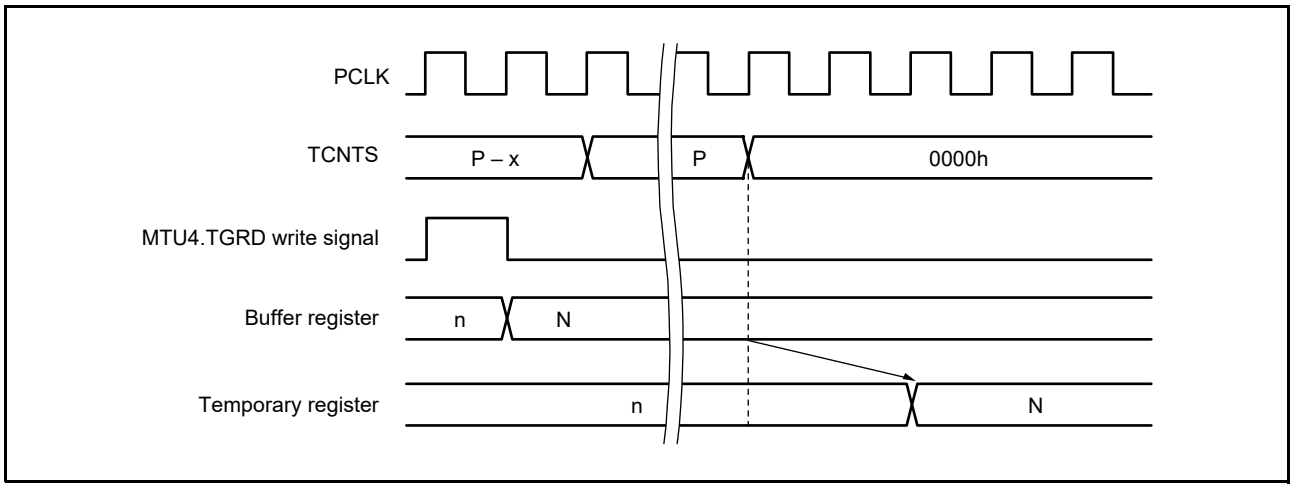

Figure 22.98 Transfer Timing from Buffer Register to Temporary Register (TCNTS Operating)

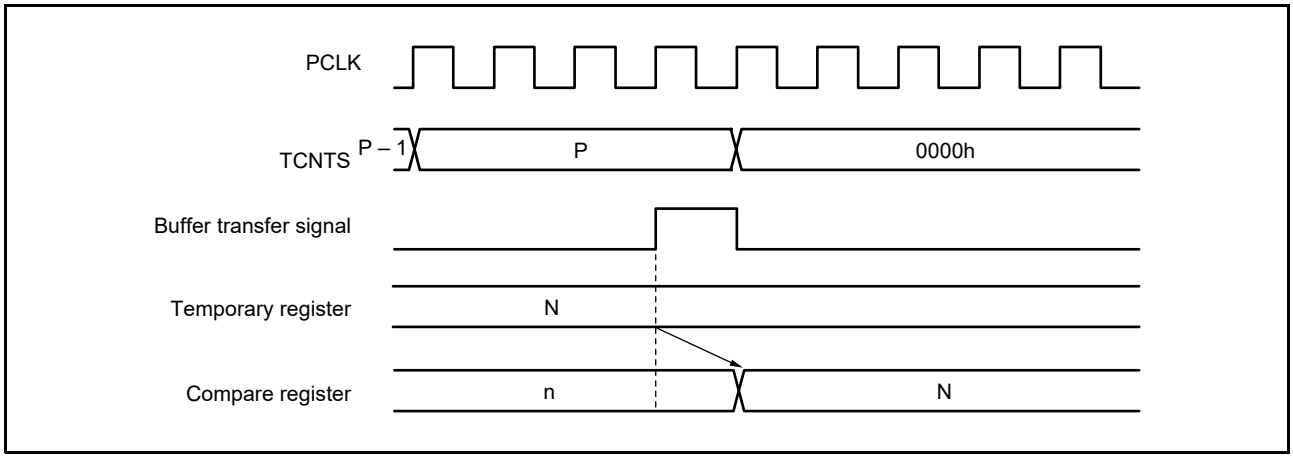

Figure 22.99 Transfer Timing from Temporary Register to Compare Register

22.5.2 Interrupt Signal Timing

(1) Timing for TGI Interrupt by Compare Match

Figure 22.100 and Figure 22.101 show the TGI interrupt request signal timing on compare match.

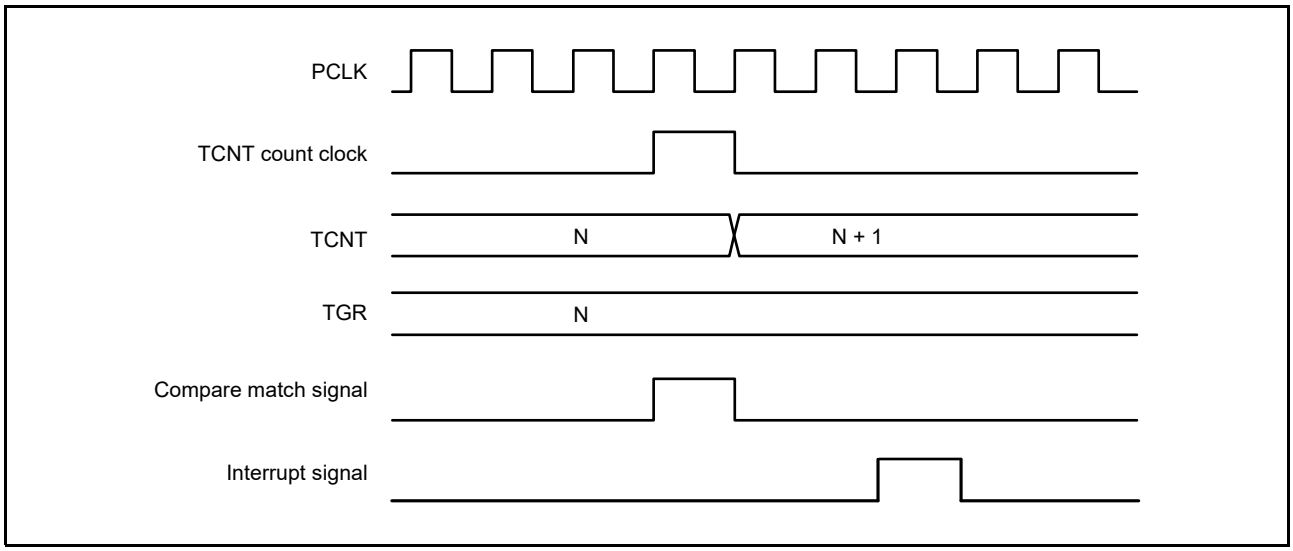

Figure 22.100 TGI Interrupt Timing (Compare Match) (MTU0 to MTU4)

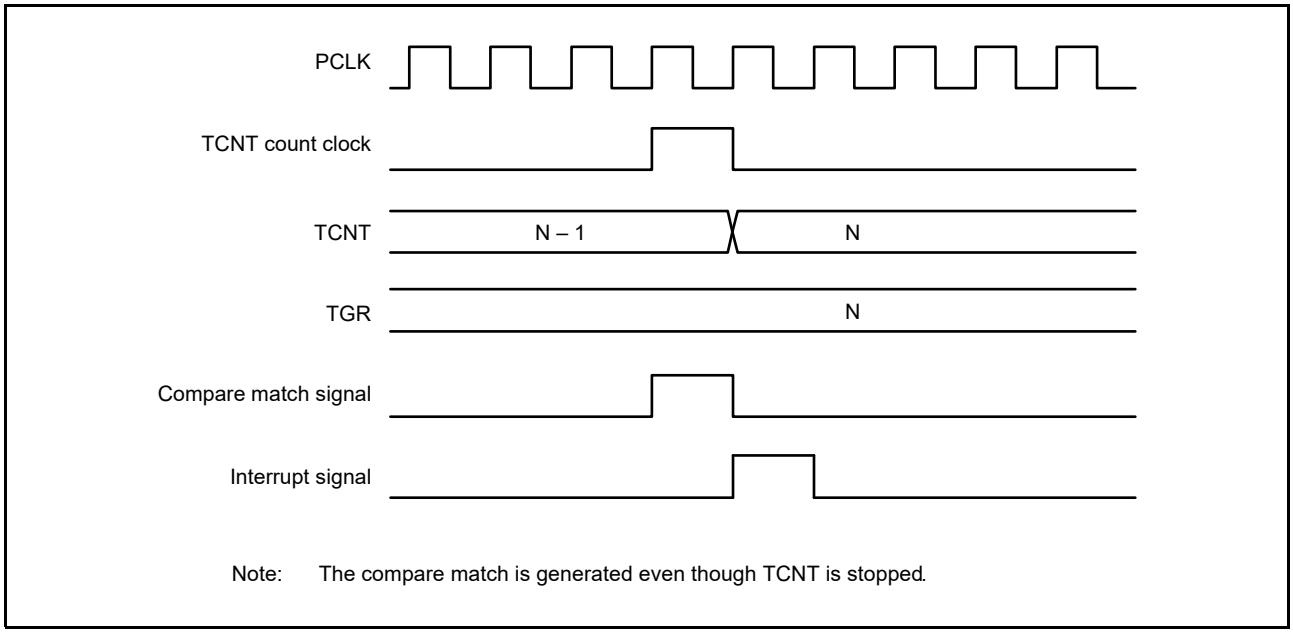

Figure 22.101 TGI Interrupt Timing (Compare Match) (MTU5)

(2) Timing for TGI Interrupt by Input Capture

Figure 22.102 and Figure 22.103 show TGI interrupt request signal timing on input capture.

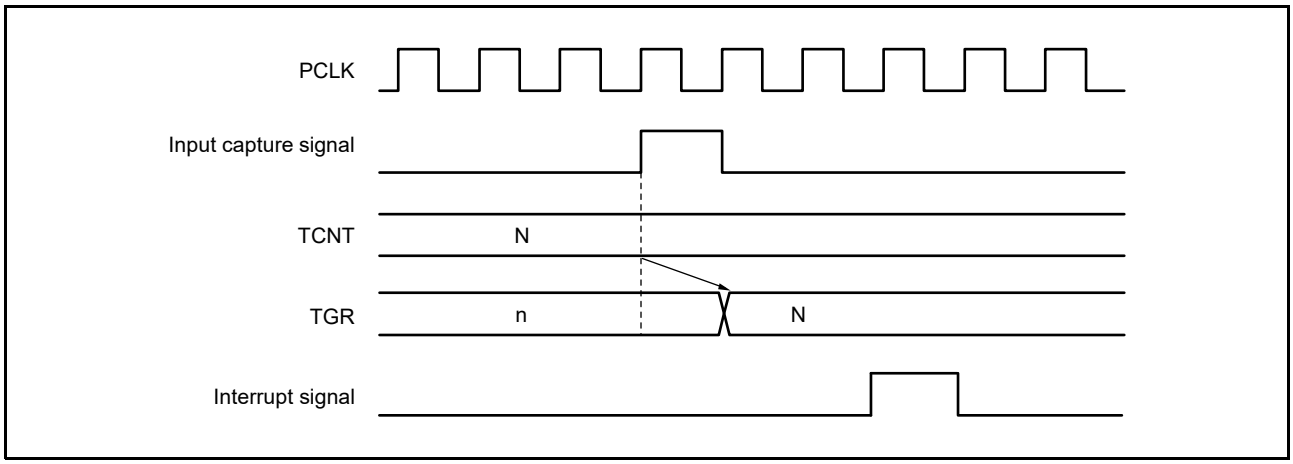

Figure 22.102 TGI Interrupt Timing (Input Capture) (MTU0 to MTU4)

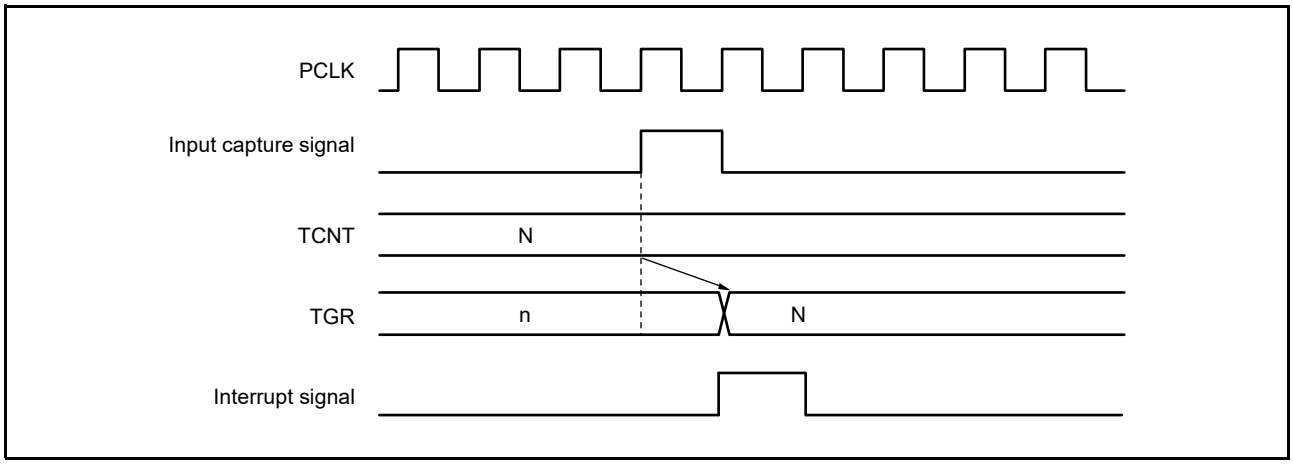

Figure 22.103 TGI Interrupt Timing (Input Capture) (MTU5)

(3) TCIV and TCIU Interrupt Timing

Figure 22.104 shows the TCIV interrupt request signal timing on overflow.
Figure 22.105 shows the TCIU interrupt request signal timing on underflow.

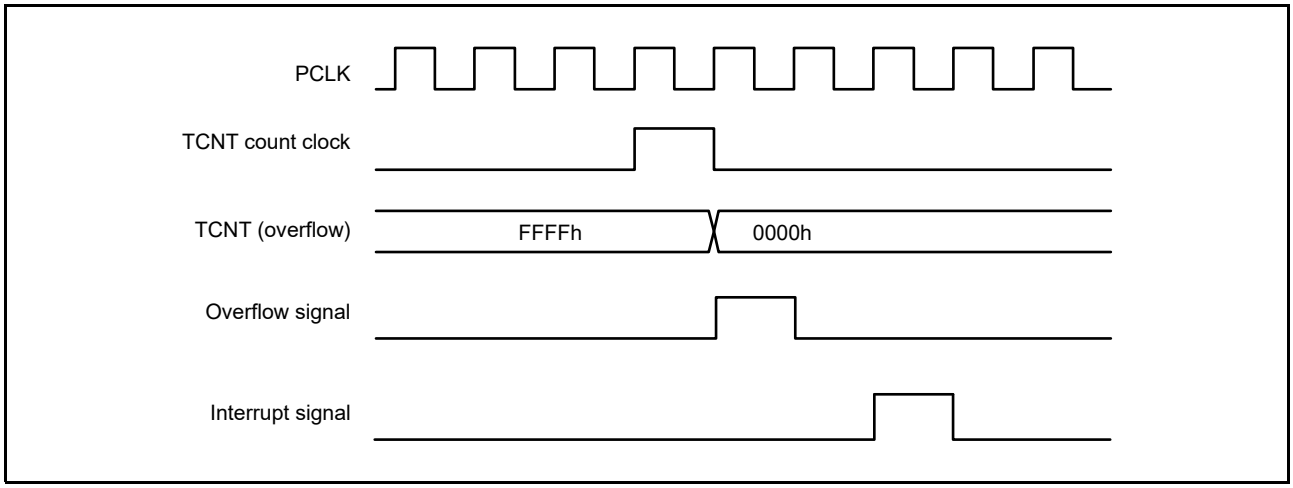

Figure 22.104 TCIV Interrupt Timing

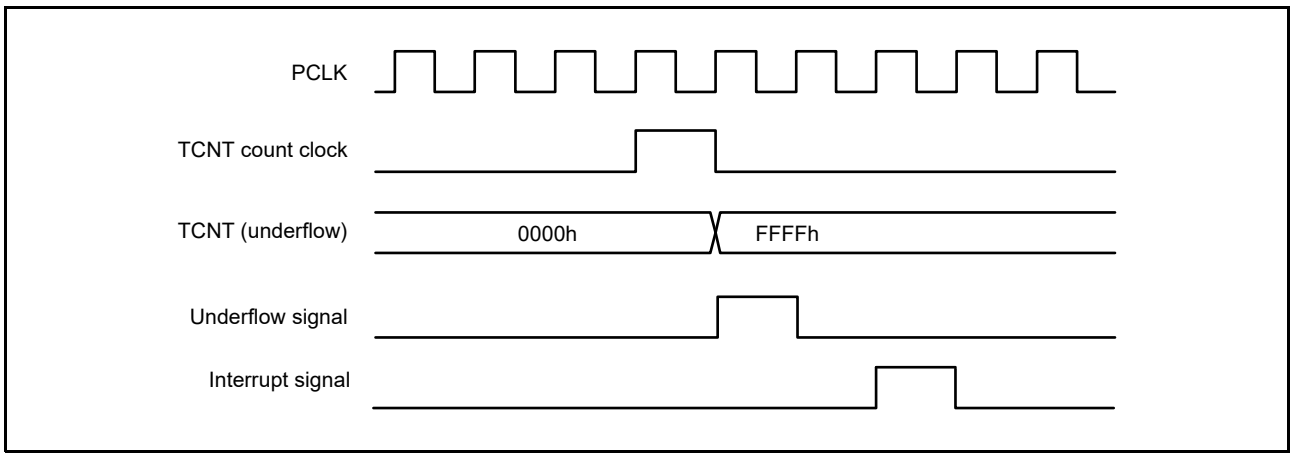

Figure 22.105 TCIU Interrupt Timing

22.6 Usage Notes

22.6.1 Module Clock Stop Mode Setting

MTU operation can be disabled or enabled using the module stop control register. MTU operation is stopped with the initial setting. Register access is enabled by releasing the module clock stop mode. For details, refer to section 11, Low Power Consumption.

22.6.2 Count Clock Restrictions

The count clock source pulse width must be at least 1.5 PCLK cycles for single-edge detection, and at least 2.5 PCLK cycles for both-edge detection. The MTU will not operate properly at narrower pulse widths.
In phase counting mode, the phase difference and overlap between the two input clocks must be at least 1.5 PCLK cycles, and the pulse width must be at least 2.5 PCLK cycles. Figure 22.106 shows the input clock conditions in phase counting mode.

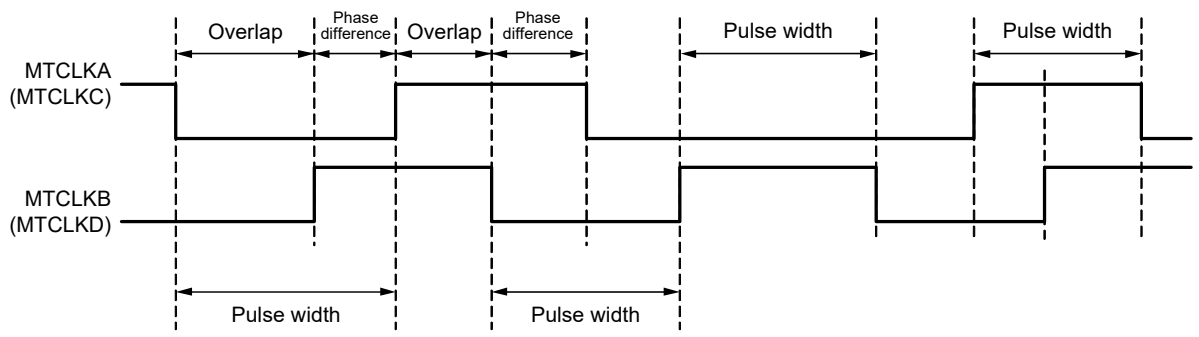

Note: Phase difference and overlap: At least 1.5 PCLK cycles
Pulse width: At least 2.5 PCLK cycles

Figure 22.106 Phase Difference, Overlap, and Pulse Width in Phase Counting Mode

22.6.3 Notes on Cycle Setting

When counter clearing on compare match is set, the TCNT counter is cleared in the final state in which it matches the TGR register value (the point at which the TCNT counter updates the matched count value). Consequently, the actual counter frequency is given by the following formula:

- MTU0 to MTU4

$$f = \frac{CNTCLK}{N + 1}$$

- MTU5

$$f = \frac{CNTCLK}{N}$$

f: Counter frequency
CNTCLK: The count clock frequency set by the TCR.TPSC[2:0] bits
N: The TGR register setting

22.6.4 Contention between TCNT Write and Clear Operations

If the counter clear signal is generated in a TCNT write cycle, the TCNT counter clearing takes precedence and the TCNT counter write operation is not performed.
Figure 22.107 shows the timing in this case.

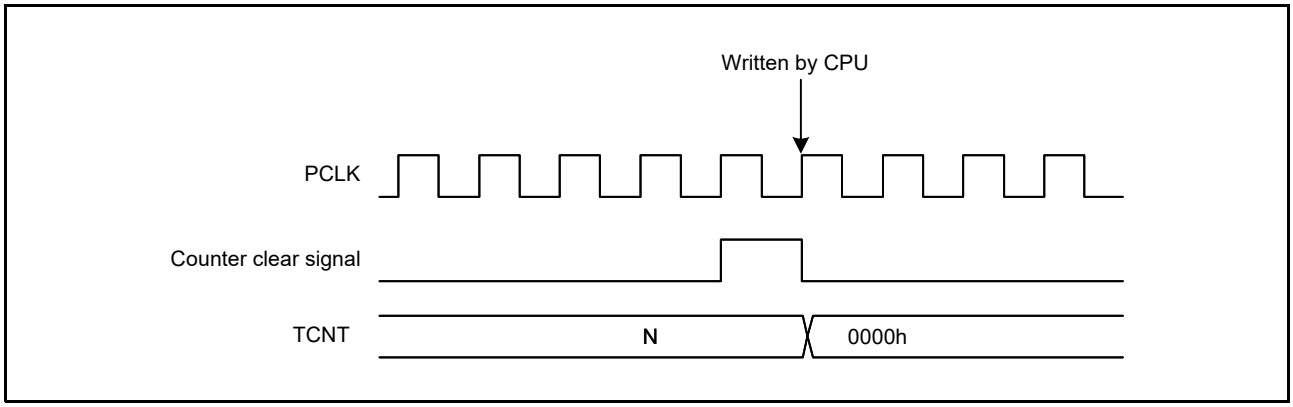

Figure 22.107 Contention between TCNT Write and Counter Clear Operations

22.6.5 Contention between TCNT Write and Increment Operations

If incrementing occurs in a TCNT write cycle, the TCNT counter write operation takes precedence and the TCNT counter is not incremented.
Figure 22.108 shows the timing in this case.

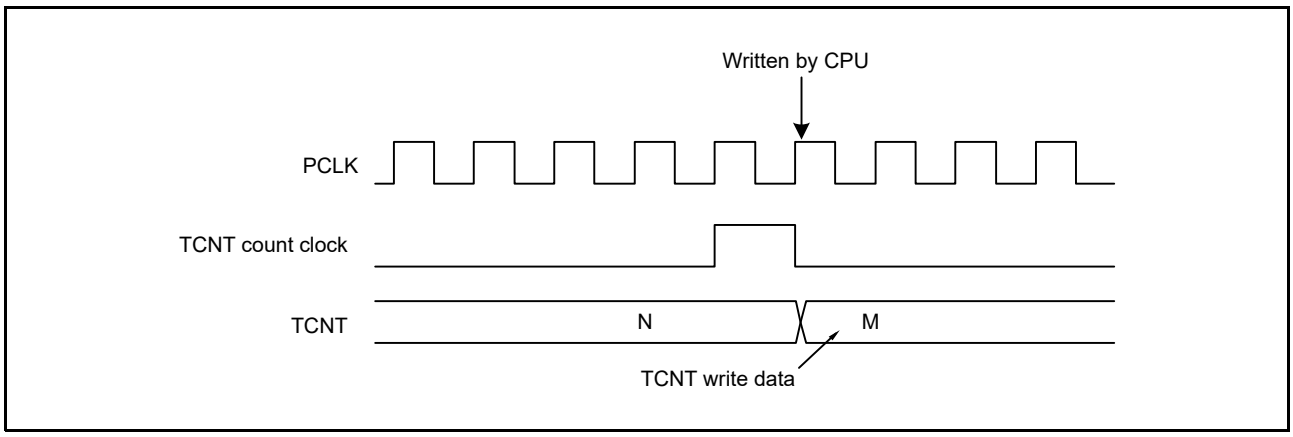

Figure 22.108 Contention between TCNT Write and Increment Operations

22.6.6 Contention between TGR Write Operation and Compare Match

If a compare match occurs in a TGR write cycle, the TGR register write operation is executed and the compare match signal is also generated.
Figure 22.109 shows the timing in this case.

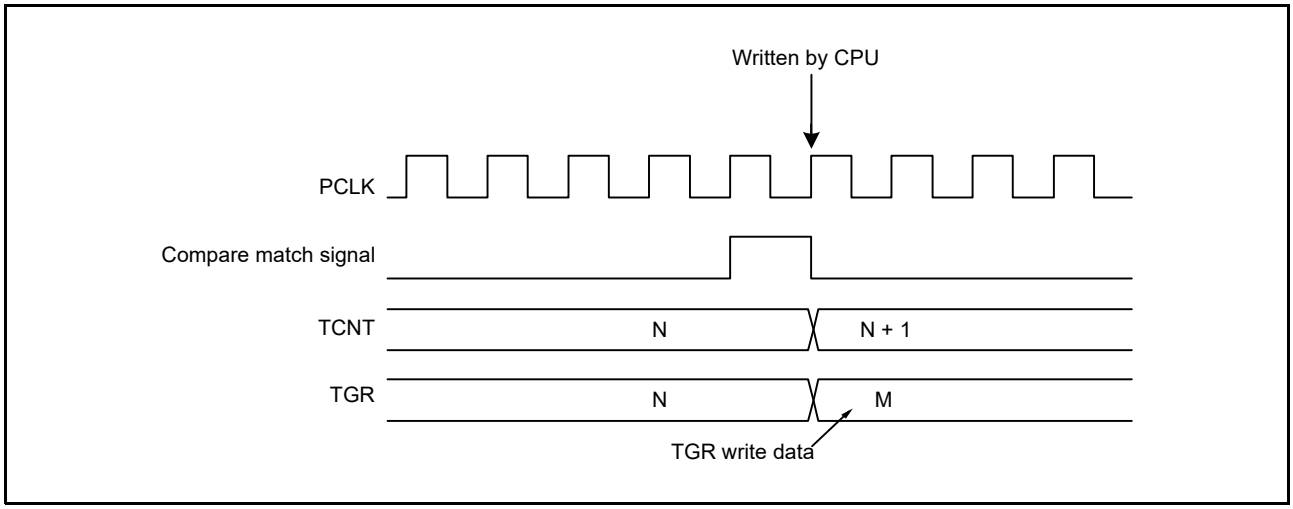

Figure 22.109 Contention between TGR Write Operation and Compare Match

22.6.7 Contention between Buffer Register Write Operation and Compare Match

If a compare match occurs in a TGR write cycle, the data before write operation is transferred to the TGR register by the buffer operation.
Figure 22.110 shows the timing in this case.

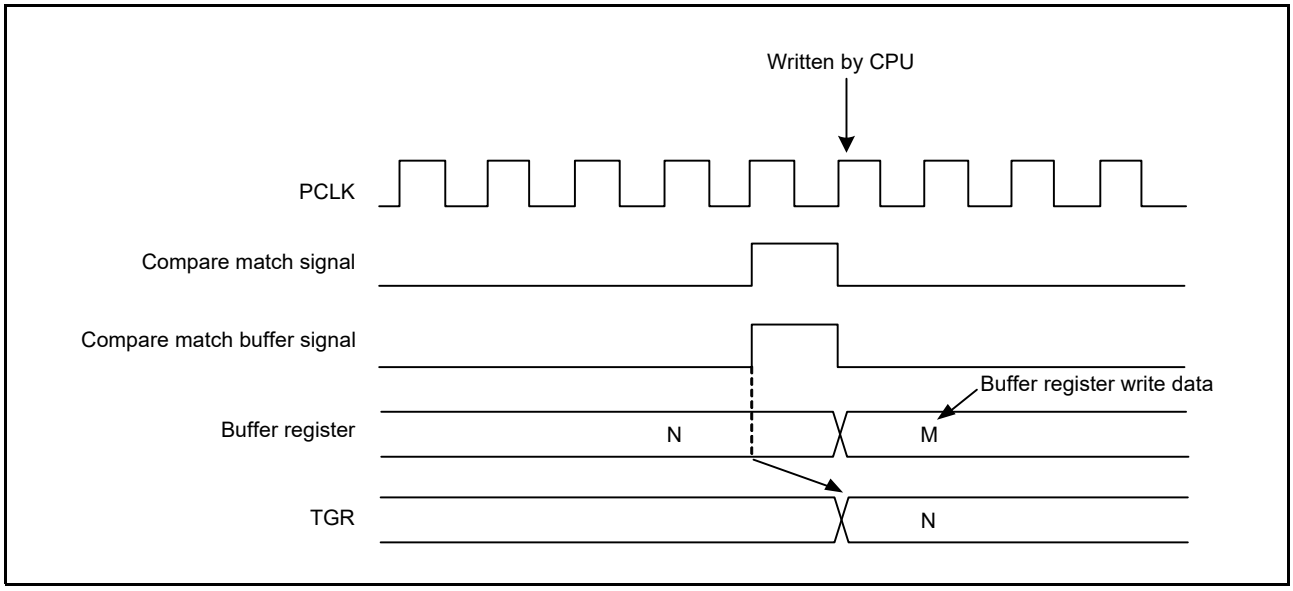

Figure 22.110 Contention between Buffer Register Write Operation and Compare Match

22.6.8 Contention between Buffer Register Write and TCNT Clear Operations

When the buffer transfer timing is set at the TCNT clear timing by the timer buffer operation transfer mode register (TBTM), if TCNT clearing occurs in a TGR write cycle, the data before write operation is transferred to TGR by the buffer operation.

Figure 22.111 shows the timing in this case.

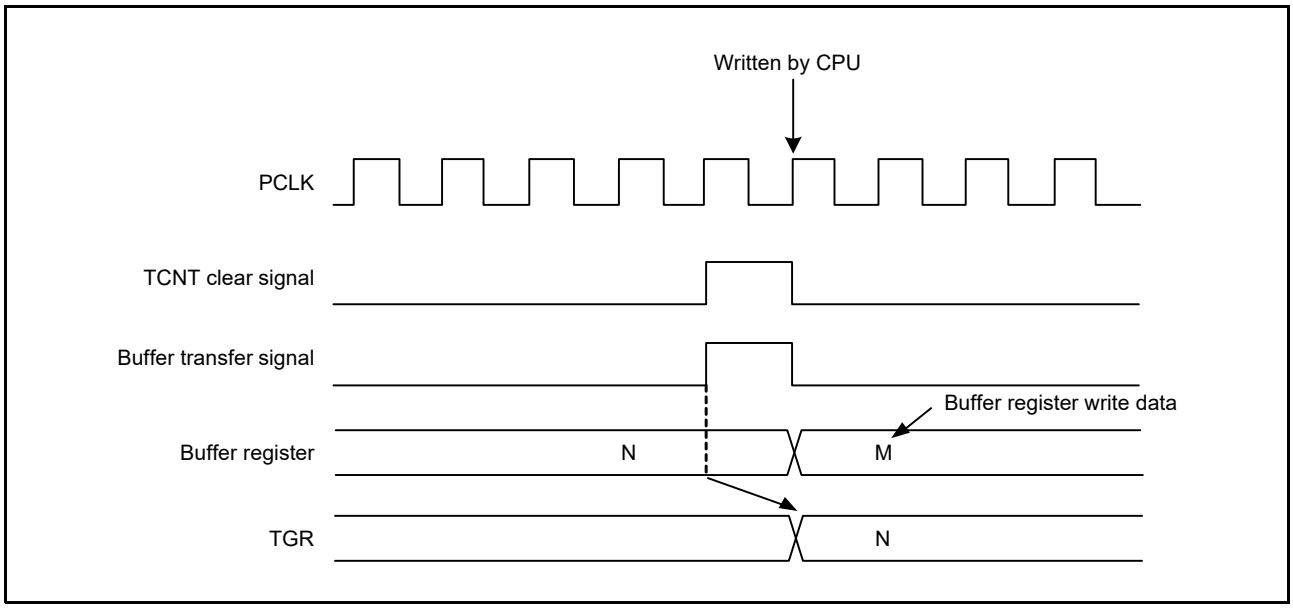

Figure 22.111 Contention between Buffer Register Write and TCNT Clear Operations

22.6.9 Contention between TGR Read Operation and Input Capture

If an input capture signal is generated in a TGR read cycle, the data before input capture transfer is read.

Figure 22.112 shows the timing in this case.

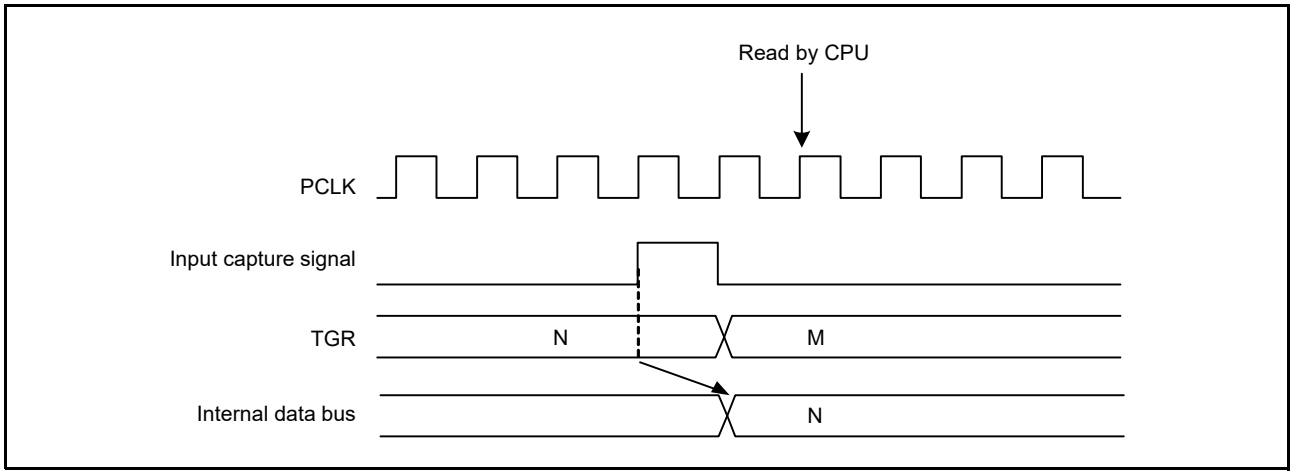

Figure 22.112 Contention between TGR Read Operation and Input Capture (MTU0 to MTU5)

22.6.10 Contention between TGR Write Operation and Input Capture

If an input capture signal is generated in a TGR write cycle, the input capture operation takes precedence and the TGR register write operation is not performed in MTU0 to MTU4. In MTU5, the TGR register write operation is performed and the input capture signal is generated.

Figure 22.113 and Figure 22.114 show the timing in this case.

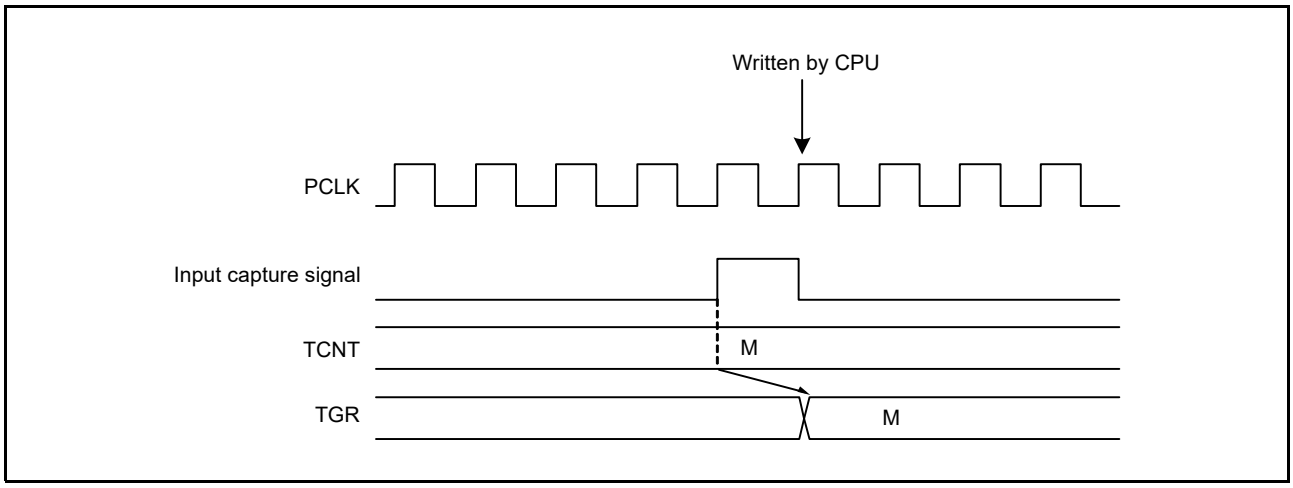

Figure 22.113 Contention between TGR Write Operation and Input Capture (MTU0 to MTU4)

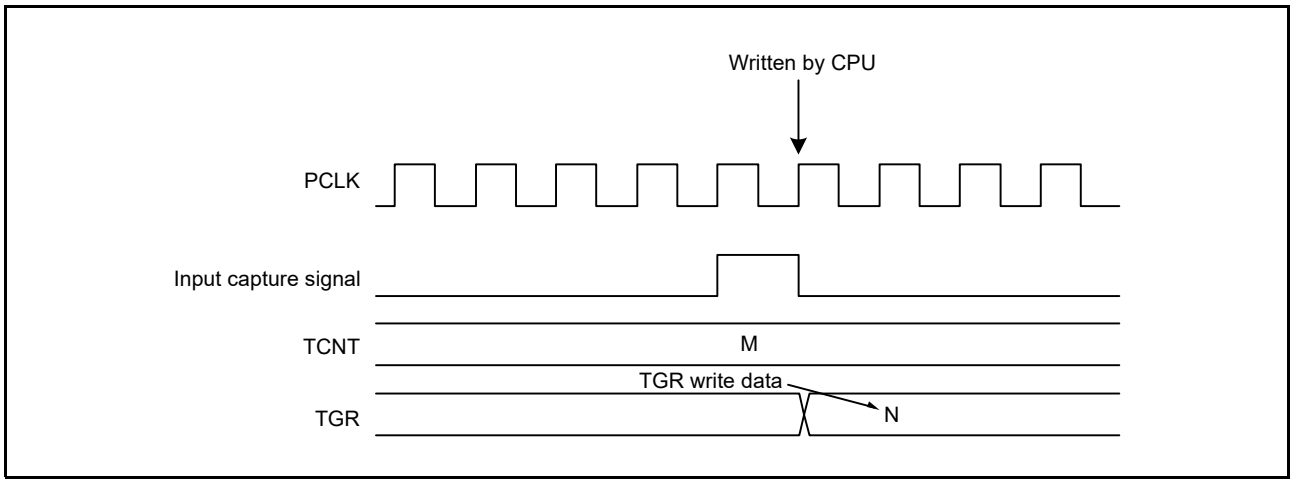

Figure 22.114 Contention between TGR Write Operation and Input Capture (MTU5)

22.6.11 Contention between Buffer Register Write Operation and Input Capture

If an input capture signal is generated in a buffer register write cycle, the buffer operation takes precedence and the buffer register write operation is not performed.

Figure 22.115 shows the timing in this case.

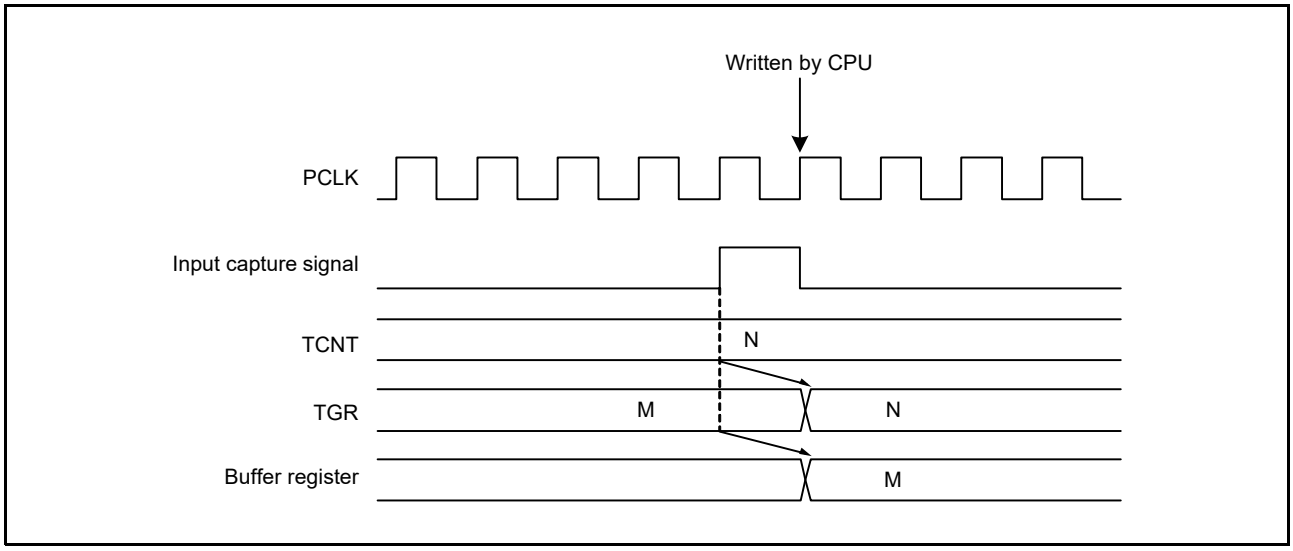

Figure 22.115 Contention between Buffer Register Write Operation and Input Capture

22.6.12 Contention between MTU2.TCNT Write Operation and Overflow/Underflow in Cascaded Operation

With timer counters MTU1.TCNT and MTU2.TCNT in a cascade, when a contention occurs between MTU1.TCNT counting (an MTU2.TCNT counter overflow/underflow) and the MTU2.TCNT write cycle, the MTU2.TCNT write operation is performed and the MTU1.TCNT count signal is disabled. In this case, if the MTU1.TGRA register works as a compare match register and there is a match between the MTU1.TGRA register and the MTU1.TCNT counter values, a compare match signal is issued.

Furthermore, when the MTU1.TCNT count clock is selected as the input capture source of MTU0, registers MTU0.TGRA to MTU0.TGRD work in input capture mode. In addition, when the MTU0.TGRC compare match/input capture is selected as the input capture source of the MTU1.TGRB register, the MTU1.TGRB register works in input capture mode.

Figure 22.116 shows the timing in this case.

When setting the TCNT clearing function in cascaded operation, be sure to synchronize MTU1 and MTU2.

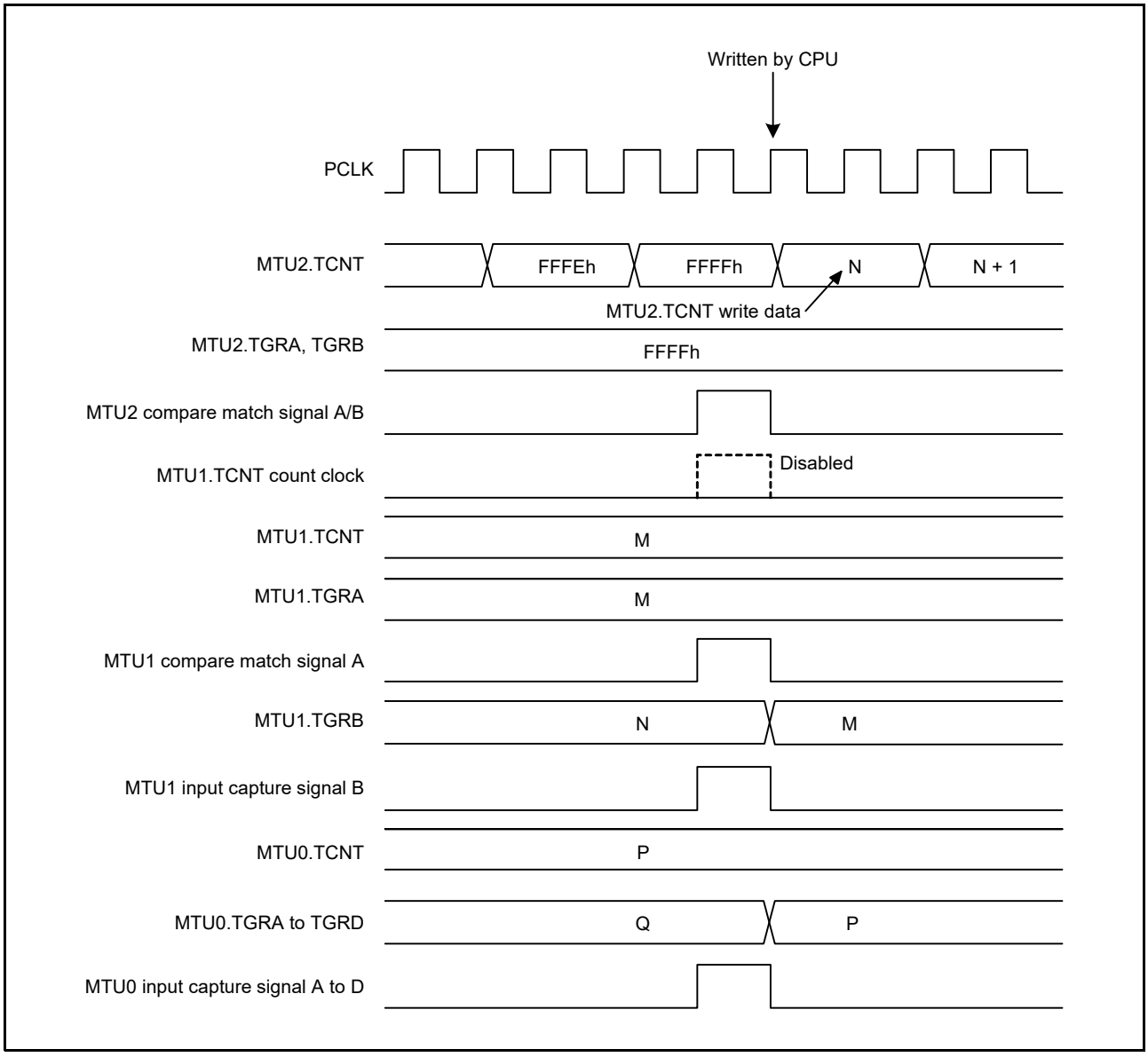

Figure 22.116 Contention between MTU2.TCNT Write Operation and Overflow/Underflow in Cascaded Operation

22.6.13 Counter Value When Count Operation is Stopped in Complementary PWM Mode

When counting operation in counters MTU3.TCNT and MTU4.TCNT is stopped in complementary PWM mode, the MTU3.TCNT counter is set to the TDDR register value and the MTU4.TCNT counter becomes 0000h.
When operation is restarted in complementary PWM mode, counting begins automatically from the initial setting state. Figure 22.117 shows this operation.
When counting begins in another operating mode, be sure to make initial settings in counters MTU3.TCNT and MTU4.TCNT.

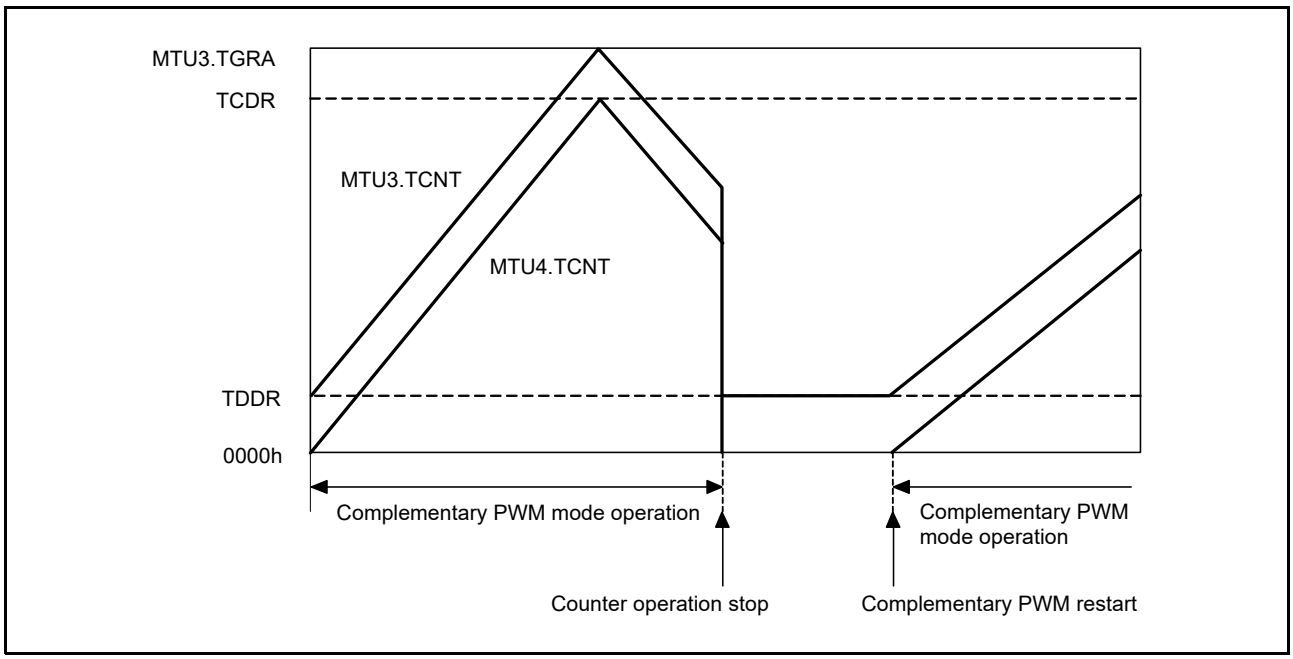

Figure 22.117 Counter Value When Stopped in Complementary PWM Mode (MTU3 and MTU4 Operation)

22.6.14 Buffer Operation Setting in Complementary PWM Mode

When modifying the PWM cycle set register (MTU3.TGRA), timer cycle data register (TCDR), and compare registers (MTU3.TGRB, MTU4.TGRA, and MTU4.TGRB) in complementary PWM mode, be sure to use buffer operation. Also, the MTU4.TMDR.BFA bit and MTU4.TMDR.BFB bit should be set to 0. Setting the MTU4.TMDR.BFA bit to 1 disables MTIOC4C pin waveform output. Setting the MTU4.TMDR.BFB bit to 1 also disables MTIOC4D pin waveform output.
In complementary PWM mode, buffer operation in MTU3 and MTU4 depends on the settings in bits BFA and BFB in the MTU3.TMDR register. When the MTU3.TMDR.BFA bit is set to 1, the MTU3.TGRC register functions as a buffer register for the MTU3.TGRA register. At the same time, the MTU4.TGRC register functions as a buffer register for the MTU4.TGRA register, and the TCBR register functions as a buffer register for the TCDR register.

22.6.15 Buffer Operation and Compare Match Flags in Reset-Synchronized PWM Mode

When setting buffer operation in reset-synchronized PWM mode, set the MTU4.TMDR.BFA bit and MTU4.TMDR.BFB bit to 0. Setting the MTU4.TMDR.BFA bit to 1 disables MTIOC4C pin waveform output. Setting the MTU4.TMDR.BFB bit to 1 also disables MTIOC4D pin waveform output.

In reset-synchronized PWM mode, buffer operation in MTU3 and MTU4 depends on the settings in the MTU3.TMDR.BFA bit and MTU3.TMDR.BFB bit. For example, if the MTU3.TMDR.BFA bit is set to 1, the MTU3.TGRC register functions as a buffer register for the MTU3.TGRA register. At the same time, the MTU4.TGRC register functions as a buffer register for the MTU4.TGRA register.

While the MTU3.TGRC and MTU3.TGRD registers are operating as buffer registers, the corresponding TGIC and TGID interrupt requests are never generated.

Figure 22.118 shows an example of the MTU3.TGR and MTU4.TGR registers, MTIOC3m, and MTIOC4m operation with the MTU3.TMDR.BFA bit and MTU3.TMDR.BFB bit set to 1 and the MTU4.TMDR.BFA bit and MTU4.TMDR.BFB bit set to 0. (m = A to D)

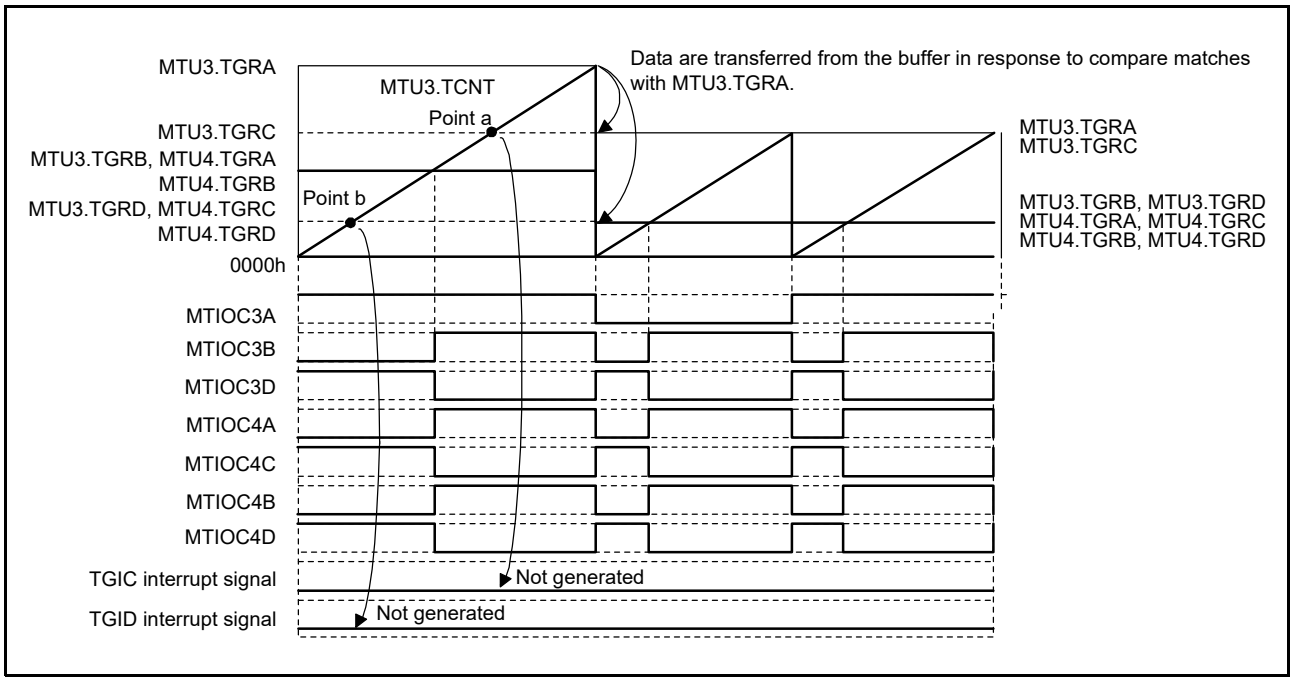

Figure 22.118 Buffer Operation and Compare Match Flags in Reset-Synchronized PWM Mode

22.6.16 Overflow Flags in Reset-Synchronized PWM Mode

After reset-synchronized PWM mode is selected, counters MTU3.TCNT and MTU4.TCNT start counting when the TSTR.CST3 bit is set to 1. In this state, the MTU4.TCNT count clock source and count edge are determined by the MTU3.TCR register setting.

In reset-synchronized PWM mode, with cycle register MTU3.TGRA set to FFFFh and the MTU3.TGRA compare match selected as the counter clearing source, counters MTU3.TCNT and MTU4.TCNT count up to FFFFh, then a compare match occurs with the MTU3.TGRA register, and counters MTU3.TCNT and MTU4.TCNT are both cleared. In this case, the corresponding TCIV interrupt request is not generated.

Figure 22.119 shows an operation example in reset-synchronized PWM mode with cycle register MTU3.TGRA set to FFFFh and the MTU3.TGRA compare match specified for the counter clearing source.

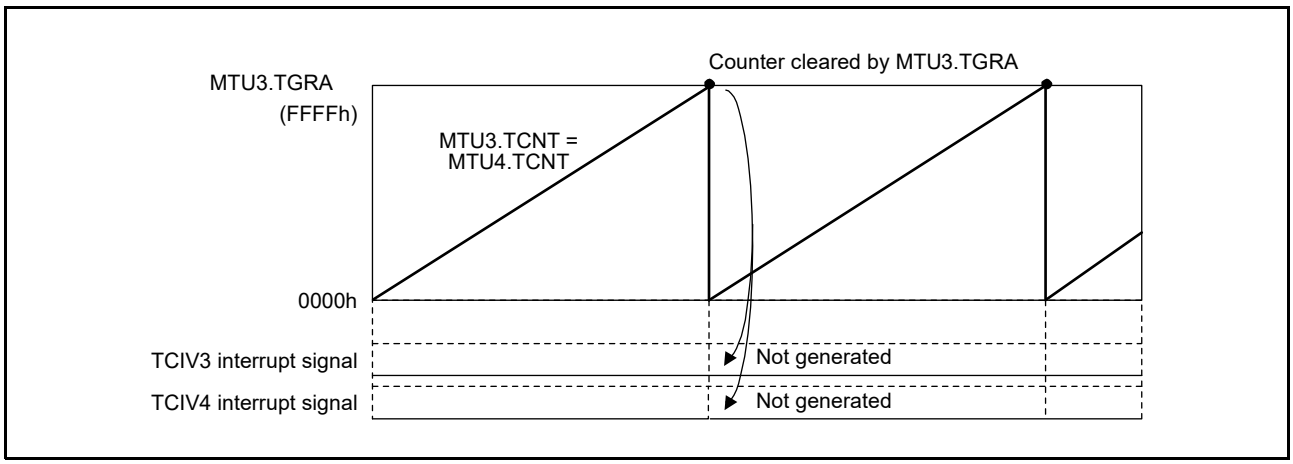

Figure 22.119 Overflow Flags in Reset-Synchronized PWM Mode

22.6.17 Contention between Overflow/Underflow and Counter Clearing

If an overflow/underflow and counter clearing occur simultaneously, the TCNT counter clearing takes precedence and the corresponding TCIV interrupt is not generated. If an overflow and counter clearing due to an input capture occur simultaneously, an input capture interrupt signal is output and an overflow interrupt signal is not output.
Figure 22.120 shows the operation timing when a TGR compare match is specified as the clearing source and the TGR register is set to FFFFh.

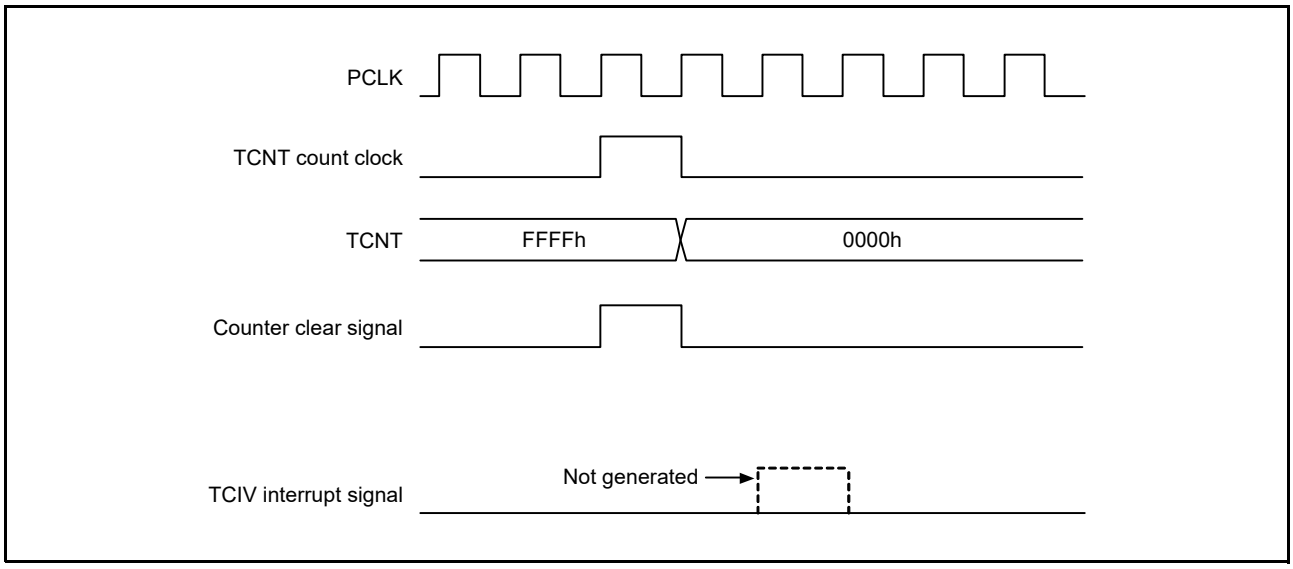

Figure 22.120 Contention between Overflow and Counter Clearing

22.6.18 Contention between TCNT Write Operation and Overflow/Underflow

If TCNT up-count or down-count in a TCNT write cycle and an overflow or an underflow occurs, the TCNT write operation takes precedence. The corresponding interrupt is not generated.
Figure 22.121 shows the operation timing when there is contention between TCNT write operation and overflow.

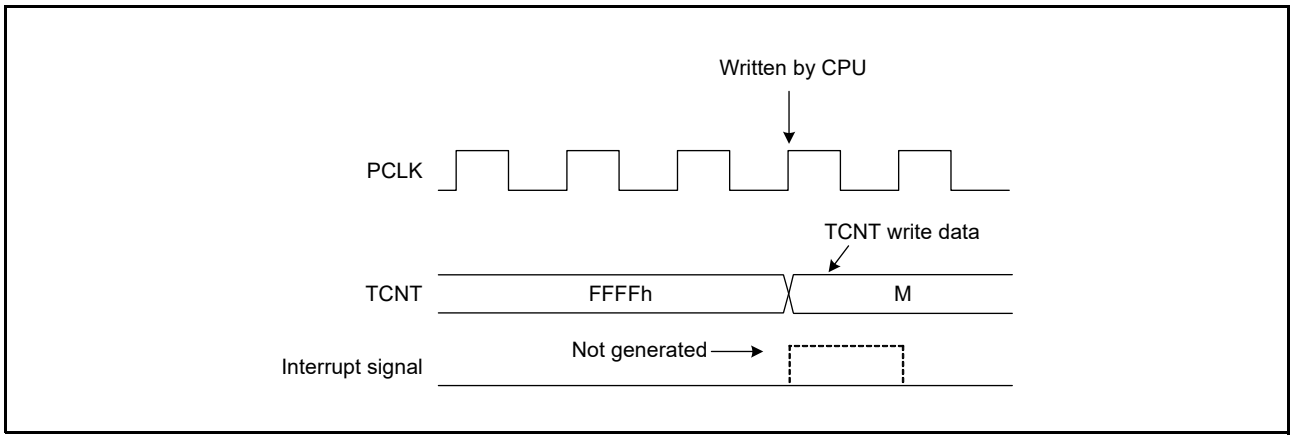

Figure 22.121 Contention between TCNT Write Operation and Overflow

22.6.19 Notes on Transition from Normal Mode or PWM Mode 1 to Reset-Synchronized PWM Mode

When making a transition from normal mode or PWM mode 1 to reset-synchronized PWM mode in MTU3 and MTU4, if the counter is stopped while the output pins (MTIOC3B, MTIOC3D, MTIOC4A, MTIOC4C, MTIOC4B, and MTIOC4D) are held at a high level and then operation is started after a transition to reset-synchronized PWM mode, the initial pin output will not be correct.
When making a transition from normal mode to reset-synchronized PWM mode, write 11h to registers MTU3.TIORH, MTU3.TIORL, MTU4.TIORH, and MTU4.TIORL to initialize the output pin state to a low level, then set the registers to the initial value (00h) before making the mode transition.
When making a transition from PWM mode 1 to reset-synchronized PWM mode, switch to normal mode, initialize the output pin state to a low level, and then set the registers to the initial value (00h) before making the transition to reset-synchronized PWM mode.

22.6.20 Output Level in Complementary PWM Mode or Reset-Synchronized PWM Mode

When complementary PWM mode or reset-synchronized PWM mode is selected for MTU3 or MTU4, use the TOCR1.OLSP bit and TOCR1.OLSN bit to set the levels for PWM waveform output. Also, when either of these modes is in use, set the TIOR register to 00h. The negative-phase output level when the TDER.TDER bit is set to 0 (no dead time is generated) in complementary PWM mode is the inverse of the positive-phase output level according to the TOCR1.OLSP bit setting, not the TOCR1.OLSN bit setting.

22.6.21 Interrupts during Periods in the Module Stop State

When an module that has issued an interrupt request enters the module stop state, clearing the source of the interrupt for the CPU or trigger signal for the DTC/DMAC is not possible.
Accordingly, disable interrupts, etc. before making the settings for the module stop state.

22.6.22 Simultaneous Input Capture in MTU1.TCNT and MTU2.TCNT in Cascade Connection

When counters MTU1.TCNT and MTU2.TCNT operate as a 32-bit counter in cascade connection, the cascaded counter value cannot be captured successfully in some cases even if input-capture input is simultaneously done to MTIOC1A and MTIOC2A or to MTIOC1B and MTIOC2B. This is because the input timing of MTIOC1A and MTIOC2A or of MTIOC1B and MTIOC2B may not be the same when external input-capture signals input into counters MTU1.TCNT and MTU2.TCNT are taken in synchronization with the internal clock.
For example, the MTU1.TCNT counter (the counter for upper 16 bits) does not capture the count-up value by an overflow from the MTU2.TCNT counter (the counter for lower 16 bits) but captures the count value before the up-counting. In this case, the values of MTU1.TCNT = FFF1h and MTU2.TCNT = 0000h should be transferred to registers MTU1.TGRA and MTU2.TGRA or to registers MTU1.TGRB and MTU2.TGRB, but the values of MTU1.TCNT = FFF0h and MTU2.TCNT = 0000h are erroneously transferred.
The MTU has a function that allows simultaneous capture of counters MTU1.TCNT and MTU2.TCNT with a single input capture input. This function can be used to read the 32-bit counter such that counters MTU1.TCNT and MTU2.TCNT are captured at the same time. For details, refer to section 22.2.8, Timer Input Capture Control Register (TICCR).

22.6.23 Notes When Complementary PWM Mode Output Protection Functions are Not Used

The complementary PWM mode output protection functions are initially enabled. Refer to section 23, Port Output Enable 2 (POE2a), for details.

22.6.24 Point for Caution Regarding MTU5.TCNT and MTU5.TGR Registers

Do not set an MTU5.TGRm (m = U, V, W) register to the value of the corresponding MTU5.TCNTm counter value plus one while counting by the MTU5.TCNTm counter is stopped. If an MTU5.TGRm register is set to the value of the corresponding MTU5.TCNTm counter value plus one while counting by the MTU5.TCNTm counter is stopped, a compare-match will be generated even though counting is stopped.
In this case, if the corresponding MTU5.TIER.TGIE5m bit is also set to 1 (interrupt requests enabled), a compare-match interrupt will also be generated. If the value of the timer compare match clear register is also 1 (enabled), the MTU5.TCNTm counter is automatically cleared to 0000h when the compare-match is generated, regardless of whether compare-match interrupt is enabled or disabled.

22.6.25 Points for Caution to Prevent Malfunctions in Synchronous Clearing for Complementary PWM Mode

If control of the output waveform is enabled (TWCR.WRE = 1) at the time of synchronous counter clearing in complementary PWM mode, satisfaction of either condition 1 or 2 below has the following effects.

- Dead time on the PWM output pins is shortened (or disappears).
- The active level is output on the PWM inverse-phase output pins beyond the period for active-level output.

Condition 1: In portion (10) of the initial output inhibition period in Figure 22.122, synchronous clearing occurs within the dead-time period for PWM output.

Condition 2: In portions (10) and (11) of the initial output inhibition period in Figure 22.123, synchronous clearing occurs when any condition from among MTU3.TGRB ≤ TDDR, MTU4.TGRA ≤ TDDR, or MTU4.TGRB ≤ TDDR is satisfied.

The following method avoids the above phenomena.

- Ensure that synchronous clearing proceeds with the value of each comparison register (MTU3.TGRB, MTU4.TGRA, and MTU4.TGRB) set to at least double the value of the dead time data register (TDDR).

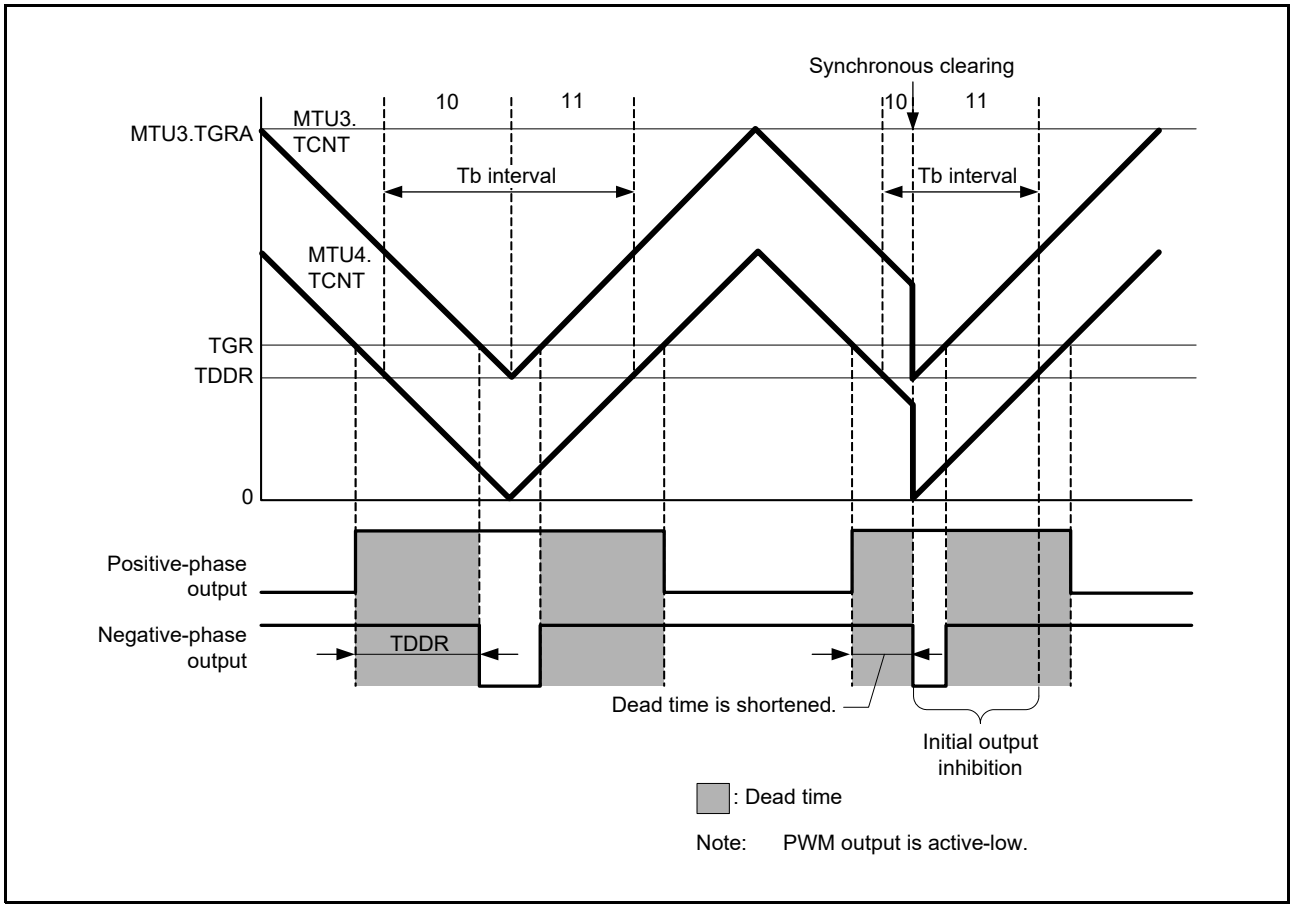

Figure 22.122 Example of Synchronous Clearing (When Condition 1 Applies)

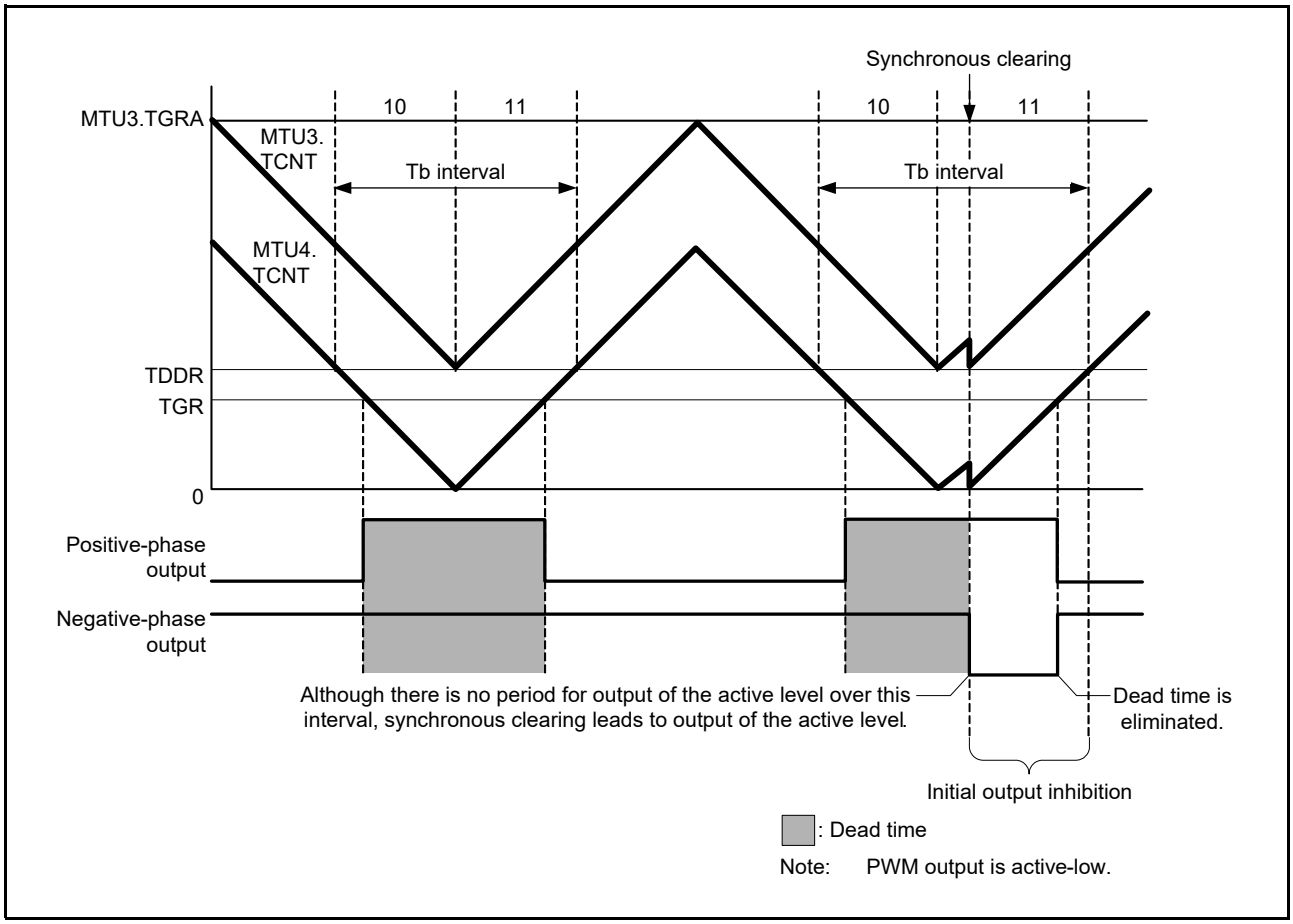

Figure 22.123 Example of Synchronous Clearing (When Condition 2 Applies)

22.6.26 Continuous Output of Interrupt Signal in Response to a Compare Match

When the TGR register is set to 0000h, PCLK/1 is set as the count clock, and compare match is set as the trigger for clearing of the count clock, the value of the TCNT counter remains 0000h, and the interrupt signal will be output continuously (i.e. its level will be flat) rather than output over a single cycle. Consequently, interrupts will not be detected in response to second and subsequent compare matches.

Figure 22.124 shows the timing for continuous output of the interrupt signal in response to a compare match.

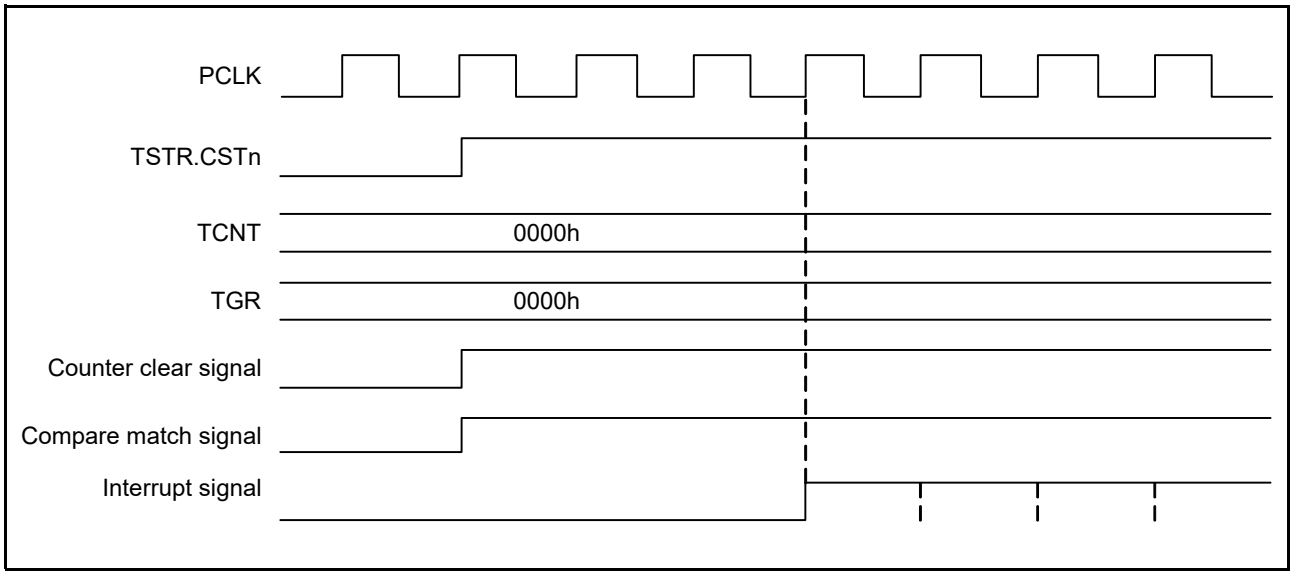

Figure 22.124 Continuous Output of Interrupt Signal in Response to a Compare Match

22.6.27 Usage Notes on A/D Conversion Start Request Delaying Function in Complementary PWM Mode

- When data is transferred from a buffer register at the trough of the MTU4.TCNT counter while the MTU4.TADCOBRA and MTU4.TADCOBRB registers are set to 0 and the UT4AE and UT4BE bits in the MTU4.TADCR register are set to 1, no A/D conversion start request is issued during up-counting immediately after transfer. Refer to Figure 22.125.
- When data is transferred from a buffer register at the crest of the MTU4.TCNT counter while the MTU4.TADCOBRA and MTU4.TADCOBRB registers are set to the same value as the TCDR register and the UT4AE and UT4BE bits in the MTU4.TADCR register are set to 1, no A/D conversion start request is issued during down-counting immediately after transfer. Refer to Figure 22.126.
- To issue an A/D conversion start request linked with interrupt skipping function, set the MTU4.TADCORA and MTU4.TADCORB registers so that 2 ≤ MTU4.TADCORA/TADCORB ≤ TCDR – 2 is satisfied.

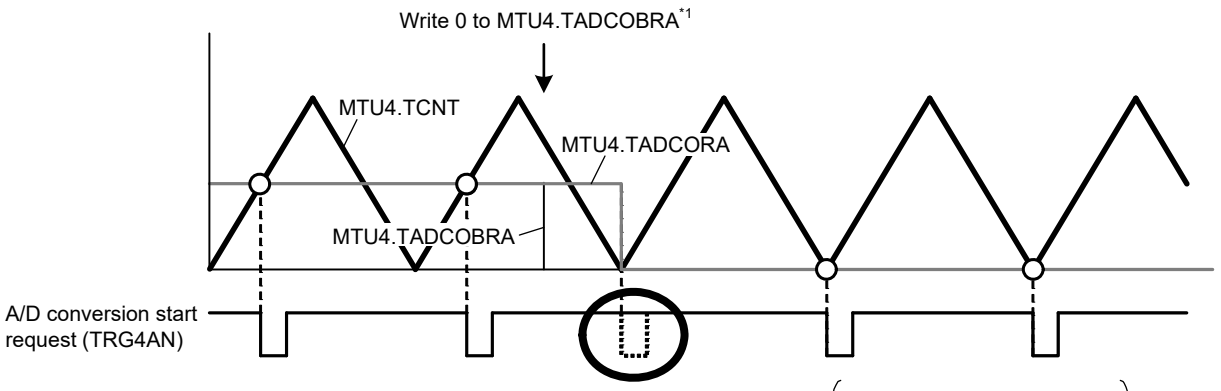

An A/D conversion start request is not issued during up-counting immediately after buffer transfer (trough).*1

(Complementary PWM mode
UT4AE = 1
DT4AE = 0
BF[1:0] = 10b (transfer at trough))

UT4AE, DT4AE, BF[1:0]: Bits in TADCR

Note 1. An A/D conversion start request is issued when TCDR – 1 ≥ MTU4.TADCOBRA/TADCOBRB ≥ 1 is written.

Figure 22.125 A/D Conversion Start Request When 0 is Written to MTU4.TADCOBRA

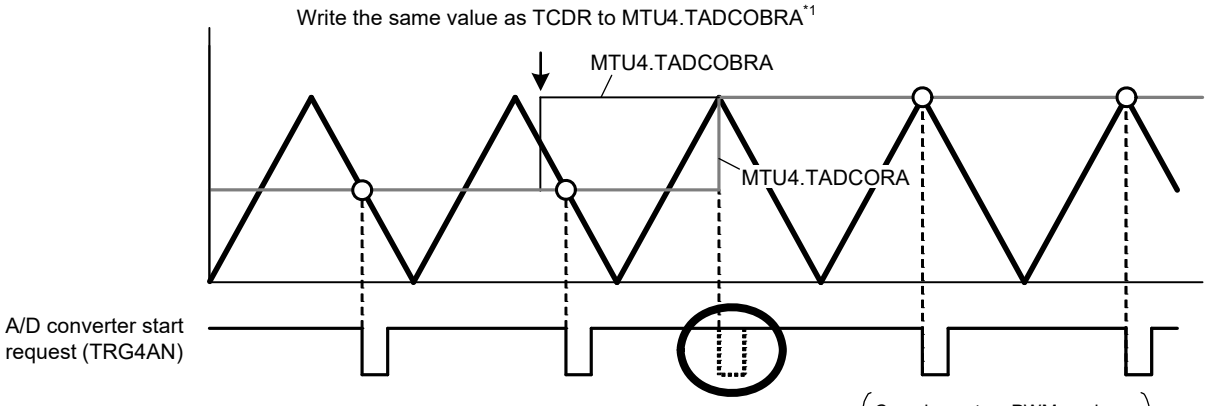

An A/D conversion start request is not issued during down-counting immediately after buffer transfer (crest).*1

(Complementary PWM mode
UT4AE = 0
DT4AE = 1
BF[1:0] = 01b (transfer at crest))

UT4AE, DT4AE, BF[1:0]: Bits in TADCR

Note 1. An A/D conversion start request is issued when TCDR – 1 ≥ MTU4.TADCOBRA/TADCOBRB ≥ 1 is written.

Figure 22.126 A/D Conversion Start Request When the Same Value as TCDR is Written to MTU4.TADCOBRA

22.7 MTU Output Pin Initialization

22.7.1 Operating Modes

The MTU has the following six operating modes. Waveforms can be output in any of these modes.

- Normal mode (MTU0 to MTU4)
- PWM mode 1 (MTU0 to MTU4)
- PWM mode 2 (MTU0 to MTU2)
- Phase counting modes 1 to 4 (MTU1 and MTU2)
- Complementary PWM mode (MTU3 and MTU4)
- Reset-synchronized PWM mode (MTU3 and MTU4)

This section describes how to initialize the MTU output pins in each of these modes.

22.7.2 Operation in Case of Re-Setting Due to Error during Operation

If an error occurs during MTU operation, MTU output should be cut off by the system. For an I/O port that is shut down, set the port direction registers (PDR), the port output data register (PODR), and the port mode register (PMR) to switch the port pins to be general output pins and for output of the non-active level. Set the TIOR for the MTU pins to disable output. Set the TOER register for the complementary PWM output pins (MTIOC3B, MTIOC3D, MTIOC4A, MTIOC4B, MTIOC4C, and MTIOC4D). For PWM output pins, output can also be cut by hardware, using port output enable 2(POE). The pin initialization procedures for re-setting due to an error during operation and the procedures for restarting in a different mode after re-setting are described below.
The MTU has six operating modes, as stated above. There are thus 36 mode transition combinations, but some transitions are not available with certain channel and mode combinations. Available mode transition combinations are listed in Table 22.59.

Note that the following notations are used for operating modes.

Normal: Normal mode PWM1: PWM mode 1 PWM2: PWM mode 2
PCM: Phase counting modes 1 to 4 CPWM: Complementary PWM mode RPWM: Reset-synchronized PWM mode

Table 22.59 Mode Transition Combinations

	Normal	PWM1	PWM2	PCM	CPWM	RPWM
Normal	(1)	(2)	(3)	(4)	(5)	(6)
PWM1	(7)	(8)	(9)	(10)	(11)	(12)
PWM2	(13)	(14)	(15)	(16)	Not available	Not available
PCM	(17)	(18)	(19)	(20)	Not available	Not available
CPWM	(21)	(22)	Not available	Not available	(23), (24)	(25)
RPWM	(26)	(27)	Not available	Not available	(28)	(29)

22.7.3 Overview of Pin Initialization Procedures and Mode Transitions in Case of Error during Operation

- When making a transition to a mode (Normal, PWM1, PWM2, or PCM) in which the pin output level is selected by the TIOR register setting, initialize the pins by means of the TIOR register setting.
- In PWM mode 1, waveforms are not output to the MTIOCnB and MTIOCnD (n = 3, 4) pins. When a pin is configured for MTIOCnB or MTIOCnD, it enters high-impedance state. To output a specified level, set the pin to general output port.
- In PWM mode 2, waveforms are not output to the cycle register pins. When a pin is configured for MTIOCnm (n = 0 to 2; m = A to D), it enters high-impedance state. To output a specified level, set the pin to general output port.
- In normal mode or PWM 2 mode, if the TGRC and TGRD register operate as buffer registers, waveforms are not output to the corresponding pins (MTIOCnC or MTIOCnD (n = 0, 3, 4)). When a pin is configured for MTIOCnC or MTIOCnD, it enters high-impedance state. To output a specified level, set the pin to general output port.
- In PWM mode 1, if either TGRC or TGRD register operates as a buffer register, waveforms are not output to the corresponding pins (MTIOCnC or MTIOCnD (n = 0, 3, 4)). When a pin is configured for MTIOCnC or MTIOCnD, it enter high-impedance state. To output a specified level, set the pin to general output port.
- When making a transition to a mode (CPWM or RPWM) in which the pin output level is selected by the timer output control register (TOCR) setting, temporarily disable output in MTU3 and MTU4 with the TOER register. At this time, when a pin is configured for MTIOCnm (n = 3, 4; m = A to D), it enters high-impedance state. To output a specified level, set the pin to general output port. Switch to normal mode, perform initialization with the TIOR register, and restore the TIOR register to its initial value. After that, operate the MTU in accordance with the mode setting procedure (TOCR setting, TMDR setting, and TOER setting).

Note: Channel number is substituted for “n” indicated in this section unless otherwise specified.

Pin initialization procedures are described below for the numbered combinations in Table 22.59. The active level is assumed to be low.

(1) Operation When Error Occurs in Normal Mode and Operation is Restarted in Normal Mode

Figure 22.127 shows a case in which an error occurs in normal mode and operation is restarted in normal mode after re-setting.

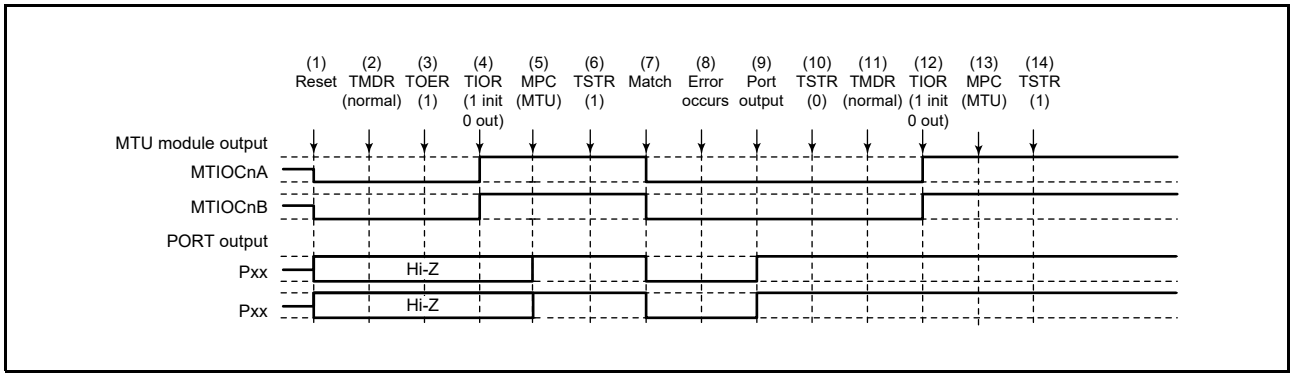

Figure 22.127 Error Occurrence in Normal Mode, Recovery in Normal Mode

(1) After a reset, the MTU output goes low and the ports enter high-impedance state.
(2) After a reset, the TMDR setting is for normal mode.
(3) For MTU3 and MTU4, enable output with the TOER register before initializing the pins with the TIOR register.
(4) Initialize the pins with the TIOR register. (In the example, the initial output is a high level, and a low level is output on compare match occurrence.)
(5) Use the MPC and the port mode register (PMR) for the I/O port to set up MTU output.
(6) Start count operation by setting the TSTR register.
(7) Output goes low on compare match occurrence.
(8) An error occurs.
(9) Use the port direction register (PDR) and port mode register (PMR) for the input port pin to switch it to operate as a general output port pin, and the port output data register (PODR) to select output of the non-active level.
(10) Stop count operation by setting the TSTR register.
(11) This step is not necessary when restarting in normal mode.
(12) Initialize the pins with the TIOR register.
(13) Use the MPC and the port mode register (PMR) for the I/O port to set up MTU output.
(14) Restart operation by setting the TSTR register.

(2) Operation When Error Occurs in Normal Mode and Operation is Restarted in PWM Mode 1

Figure 22.128 shows a case in which an error occurs in normal mode and operation is restarted in PWM mode 1 after re-setting.

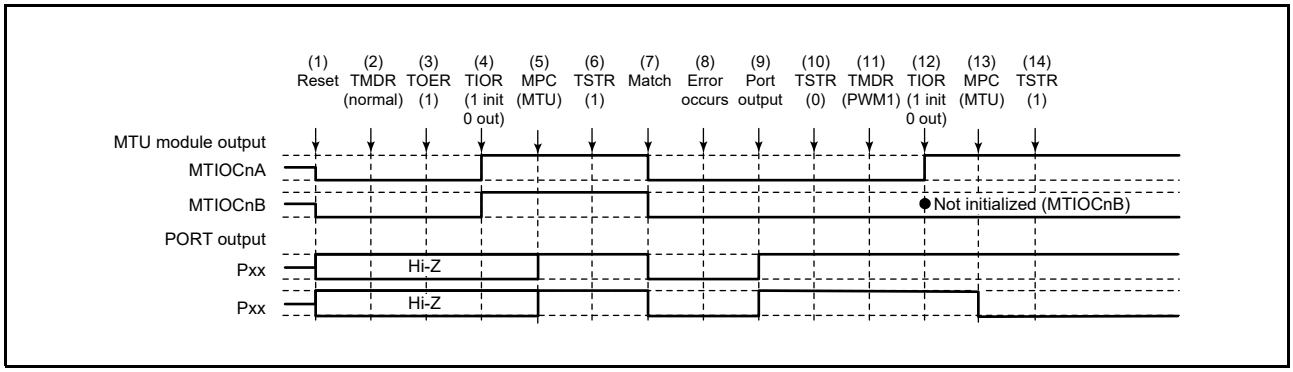

Figure 22.128 Error Occurrence in Normal Mode, Recovery in PWM Mode 1

(1) to (10) are the same as in Figure 22.127.
(11) Set PWM mode 1.
(12) Set the TIOR register to initialize pins, i.e. so that the MTIOCnB (or MTIOCnD) does not produce a waveform in PWM mode 1. If a particular level should be output, set the port direction register (PDR) and the port output data register (PODR) so that the pins of the I/O port operate as general outputs.
(13) Use the MPC and the port mode register (PMR) for the I/O port to set up MTU output.
(14) Restart operation by setting the TSTR register.

(3) Operation When Error Occurs in Normal Mode and Operation is Restarted in PWM Mode 2

Figure 22.129 shows a case in which an error occurs in normal mode and operation is restarted in PWM mode 2 after re-setting.

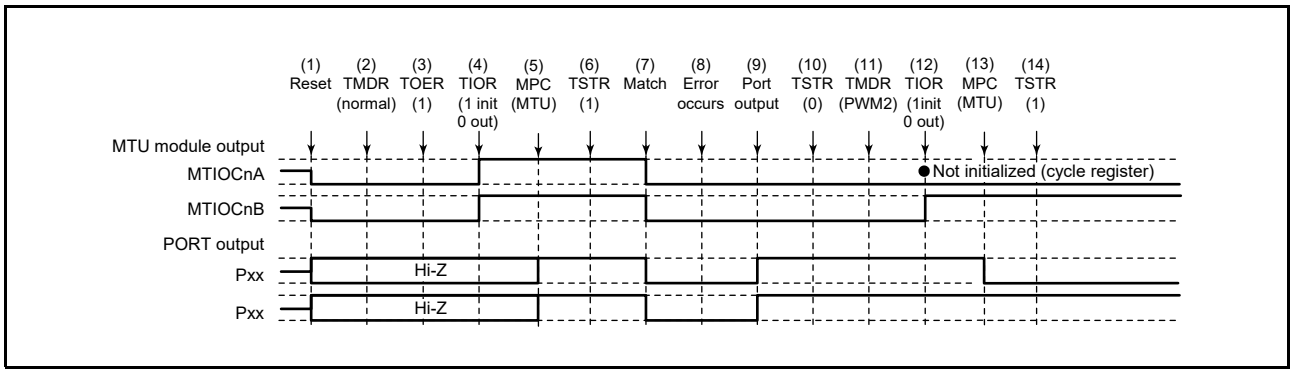

Figure 22.129 Error Occurrence in Normal Mode, Recovery in PWM Mode 2

(1) to (10) are the same as in Figure 22.127.
(11) Set PWM mode 2.
(12) Initialize the pins with the TIOR register. (In PWM mode 2, the cycle register pins are not initialized. If initialization is required, initialize in normal mode, then switch to PWM mode 2.)
(13) Use the MPC and the port mode register (PMR) for the I/O port to set up MTU output.
(14) Restart operation by setting the TSTR register.

Note: PWM mode 2 can only be selected for MTU0 to MTU2, and therefore the TOER register setting is not necessary.

(4) Operation When Error Occurs in Normal Mode and Operation is Restarted in Phase Counting Mode

Figure 22.130 shows a case in which an error occurs in normal mode and operation is restarted in phase counting mode after re-setting.

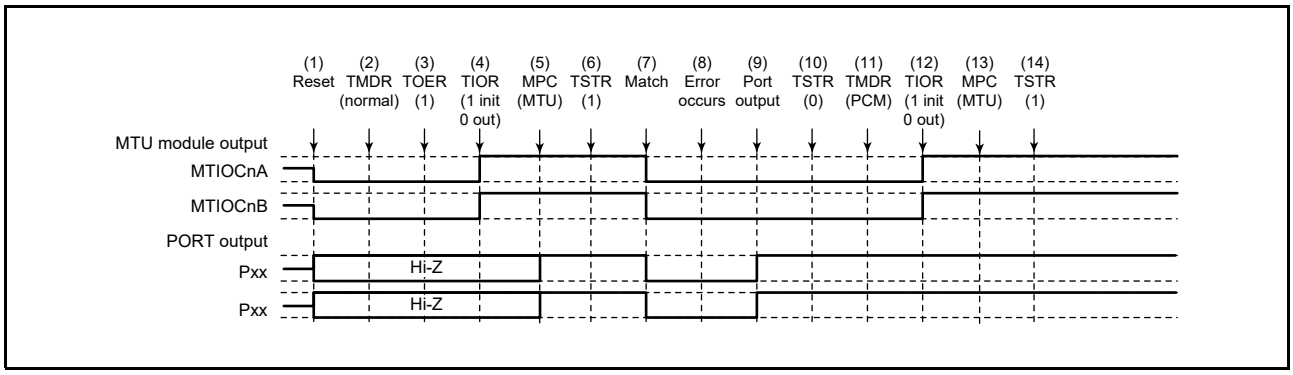

Figure 22.130 Error Occurrence in Normal Mode, Recovery in Phase Counting Mode

(1) to (10) are the same as in Figure 22.127.
(11) Set the phase counting mode.
(12) Initialize the pins with the TIOR register.
(13) Use the MPC and the port mode register (PMR) for the I/O port to set up MTU output.
(14) Restart operation by setting the TSTR register.

Note: The phase counting mode can only be selected for MTU1 and MTU2, and therefore the TOER register setting is not necessary.

(5) Operation When Error Occurs in Normal Mode and Operation is Restarted in Complementary PWM Mode

Figure 22.131 shows a case in which an error occurs in normal mode and operation is restarted in complementary PWM mode after re-setting.

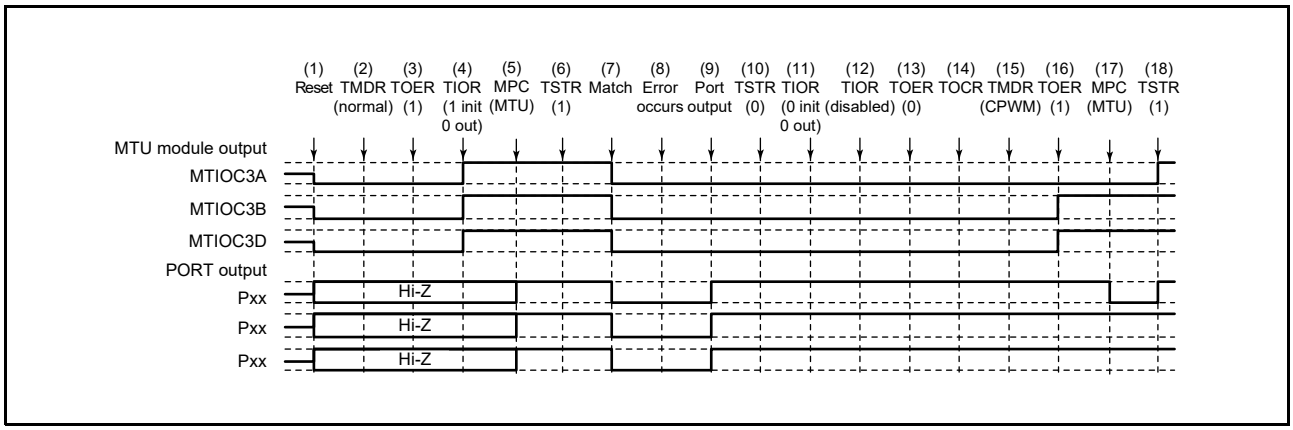

Figure 22.131 Error Occurrence in Normal Mode, Recovery in Complementary PWM Mode

(1) to (10) are the same as in Figure 22.127.
(11) Initialize the normal mode waveform generation block with the TIOR register.
(12) Disable operation of the normal mode waveform generation block with the TIOR register.
(13) Disable output in MTU3 and MTU4 with the TOER register.
(14) Select the complementary PWM mode output level and enable or disable cyclic output with the TOCR register.
(15) Set complementary PWM mode.
(16) Enable output in MTU3 and MTU4 with the TOER register.
(17) Use the MPC and the port mode register (PMR) for the I/O port to set up MTU output.
(18) Restart operation by setting the TSTR register.

(6) Operation When Error Occurs in Normal Mode and Operation is Restarted in Reset-Synchronized PWM Mode

Figure 22.132 shows a case in which an error occurs in normal mode and operation is restarted in reset-synchronized PWM mode after re-setting.

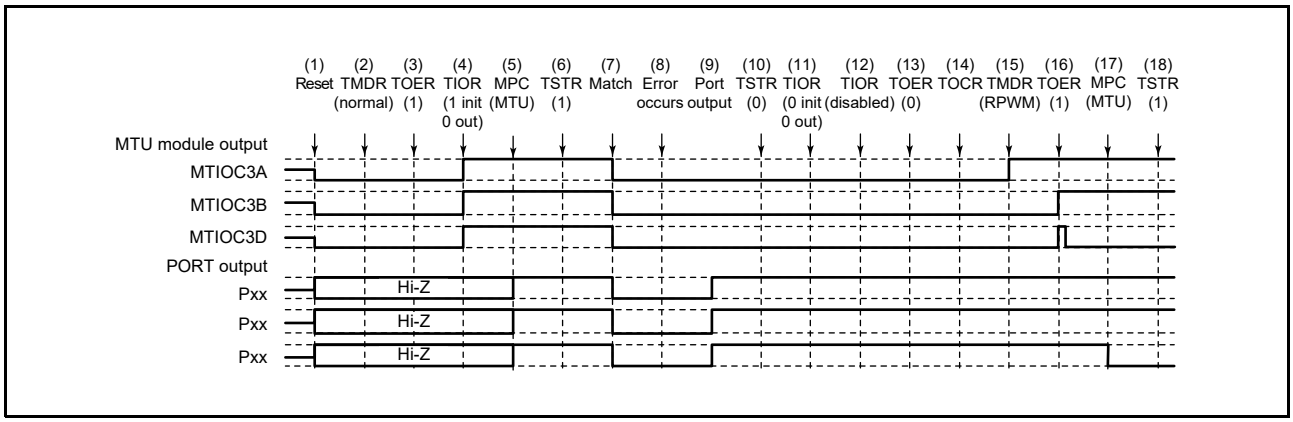

Figure 22.132 Error Occurrence in Normal Mode, Recovery in Reset-Synchronized PWM Mode

(1) to (13) are the same as in Figure 22.131.

(14) Select the reset-synchronized PWM mode output level and enable or disable cyclic output with the TOCR register.

(15) Set reset-synchronized PWM mode.

(16) Enable output in MTU3 and MTU4 with the TOER register.

(17) Use the MPC and the port mode register (PMR) for the I/O port to set up MTU output.

(18) Restart operation by setting the TSTR register.

(7) Operation When Error Occurs in PWM Mode 1 and Operation is Restarted in Normal Mode

Figure 22.133 shows a case in which an error occurs in PWM mode 1 and operation is restarted in normal mode after re-setting.

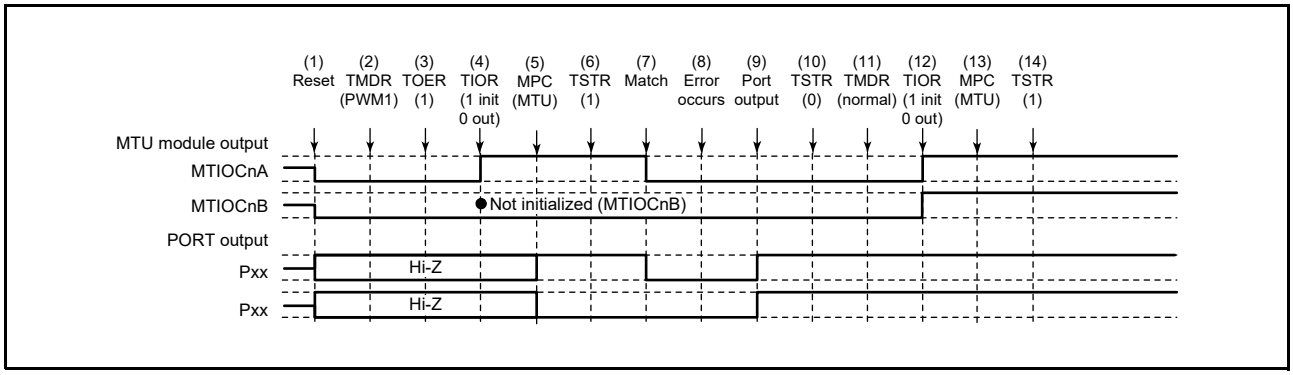

Figure 22.133 Error Occurrence in PWM Mode 1, Recovery in Normal Mode

(1) After a reset, the MTU output goes low and the ports enter high-impedance state.
(2) Set PWM mode 1.
(3) For MTU3 and MTU4, enable output with the TOER register before initializing the pins with the TIOR register.
(4) Initialize the pins with the TIOR register. (In the example, the initial output is a high level, and a low level is output on compare match occurrence. In PWM mode 1, the MTIOCnB side is not initialized.)
(5) Use the MPC and the port mode register (PMR) for the I/O port to set up MTU output.
(6) Start count operation by setting the TSTR register.
(7) Output goes low on compare match occurrence.
(8) An error occurs.
(9) Use the port direction register (PDR) and port mode register (PMR) for the input port pin to switch it to operate as a general output port pin, and the port output data register (PODR) to select output of the non-active level.
(10) Stop count operation by setting the TSTR register.
(11) Set normal mode.
(12) Initialize the pins with the TIOR register.
(13) Use the MPC and the port mode register (PMR) for the I/O port to set up MTU output.
(14) Restart operation by setting the TSTR register.

(8) Operation When Error Occurs in PWM Mode 1 and Operation is Restarted in PWM mode 1

Figure 22.134 shows a case in which an error occurs in PWM mode 1 and operation is restarted in PWM mode 1 after re-setting.

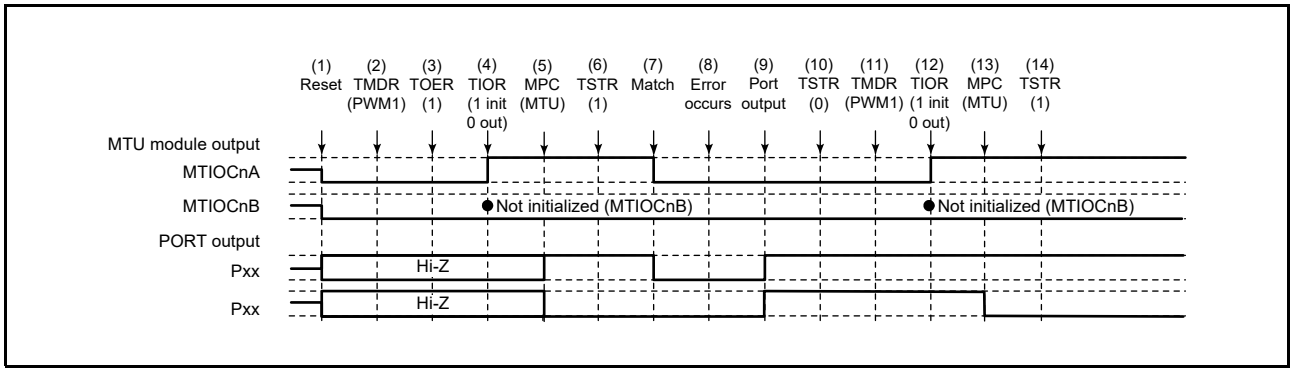

Figure 22.134 Error Occurrence in PWM Mode 1, Recovery in PWM Mode 1

(1) to (10) are the same as in Figure 22.133.
(11) This step is not necessary when restarting in PWM mode 1.
(12) Initialize the pins with the TIOR register. (In PWM mode 1, a waveform is not output on the MTIOCnB (MTIOCnD) pins. If a level is to be output, make the required general output port settings in the I/O port's port direction register (PDR) and port output data register (PODR).)
(13) Use the MPC and the port mode register (PMR) for the I/O port to set up MTU output.
(14) Restart operation by setting the TSTR register.

(9) Operation When Error Occurs in PWM Mode 1 and Operation is Restarted in PWM mode 2

Figure 22.135 shows a case in which an error occurs in PWM mode 1 and operation is restarted in PWM mode 2 after re-setting.

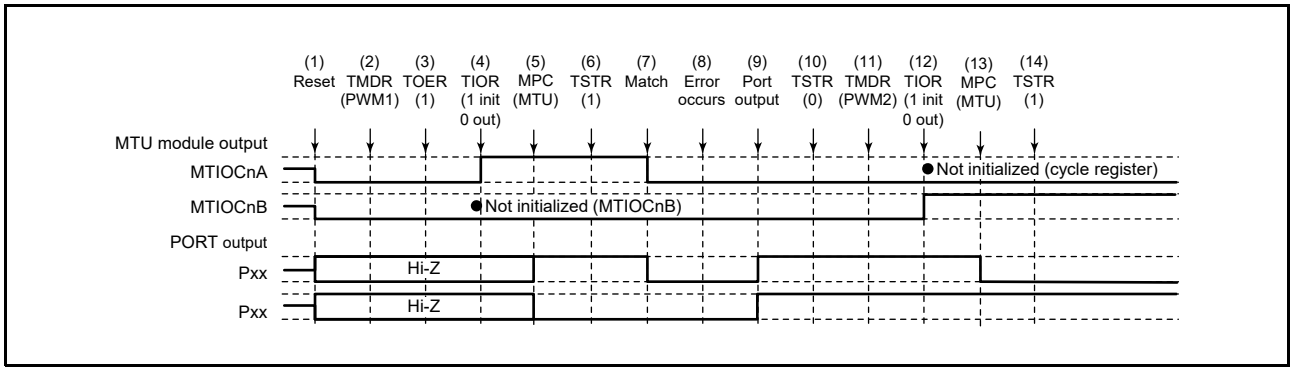

Figure 22.135 Error Occurrence in PWM Mode 1, Recovery in PWM Mode 2

(1) to (10) are the same as in Figure 22.133.
(11) Set PWM mode 2.
(12) Initialize the pins with the TIOR register. (In PWM mode 2, a waveform is not output on the cycle register pins. If a level is to be output, make the required general output port settings in the I/O port's port direction register (PDR) and port output data register (PODR).)
(13) Use the MPC and the port mode register (PMR) for the I/O port to set up MTU output.
(14) Restart operation by setting the TSTR register.

Note: PWM mode 2 can only be selected for MTU0 to MTU2, and therefore the TOER register setting is not necessary.

(10) Operation When Error Occurs in PWM Mode 1 and Operation is Restarted in Phase Counting Mode

Figure 22.136 shows a case in which an error occurs in PWM mode 1 and operation is restarted in phase counting mode after re-setting.

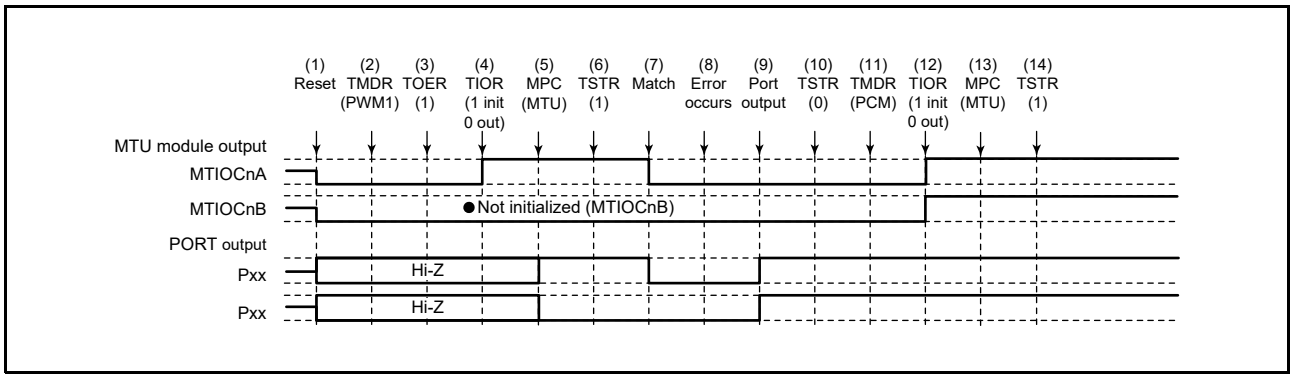

Figure 22.136 Error Occurrence in PWM Mode 1, Recovery in Phase Counting Mode

(1) to (10) are the same as in Figure 22.133.
(11) Set the phase counting mode.
(12) Initialize the pins with the TIOR register.
(13) Use the MPC and the port mode register (PMR) for the I/O port to set up MTU output.
(14) Restart operation by setting the TSTR register.

Note: The phase counting mode can only be selected for MTU1 and MTU2, and therefore the TOER register setting is not necessary.

(11) Operation When Error Occurs in PWM Mode 1 and Operation is Restarted in Complementary PWM Mode

Figure 22.137 shows a case in which an error occurs in PWM mode 1 and operation is restarted in complementary PWM mode after re-setting.

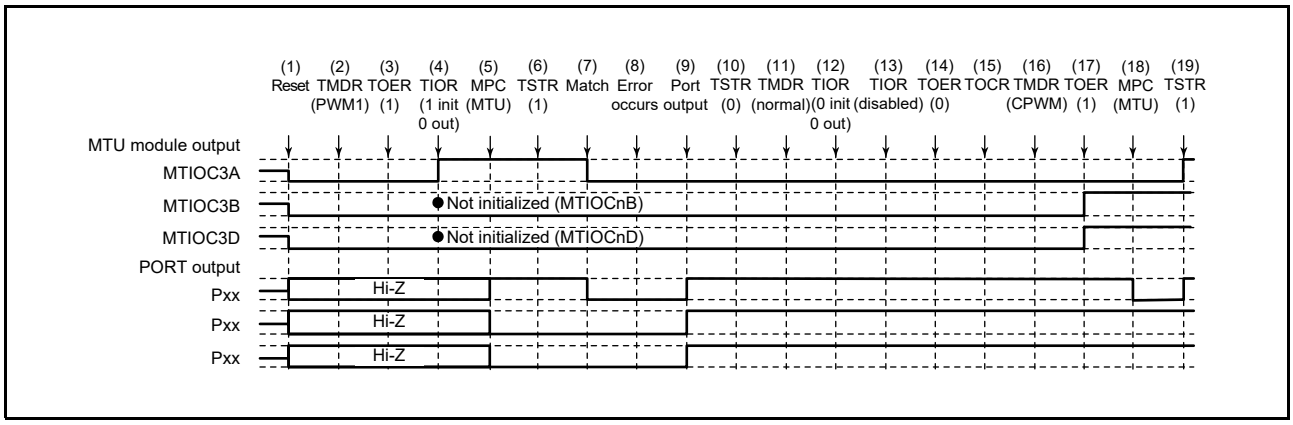

Figure 22.137 Error Occurrence in PWM Mode 1, Recovery in Complementary PWM Mode

(1) to (10) are the same as in Figure 22.133.
(11) Set normal mode to initialize the normal mode waveform generation block.
(12) Initialize the PWM mode 1 waveform generation block with the TIOR register.
(13) Disable operation of the PWM mode 1 waveform generation block with the TIOR register.
(14) Disable output in MTU3 and MTU4 with the TOER register.
(15) Select the complementary PWM mode output level and enable or disable cyclic output with the TOCR register.
(16) Set complementary PWM mode.
(17) Enable output in MTU3 and MTU4 with the TOER register.
(18) Use the MPC and the port mode register (PMR) for the I/O port to set up MTU output.
(19) Restart operation by setting the TSTR register.

(12) Operation When Error Occurs in PWM Mode 1 and Operation is Restarted in Reset-Synchronized PWM Mode

Figure 22.138 shows a case in which an error occurs in PWM mode 1 and operation is restarted in reset-synchronized PWM mode after re-setting.

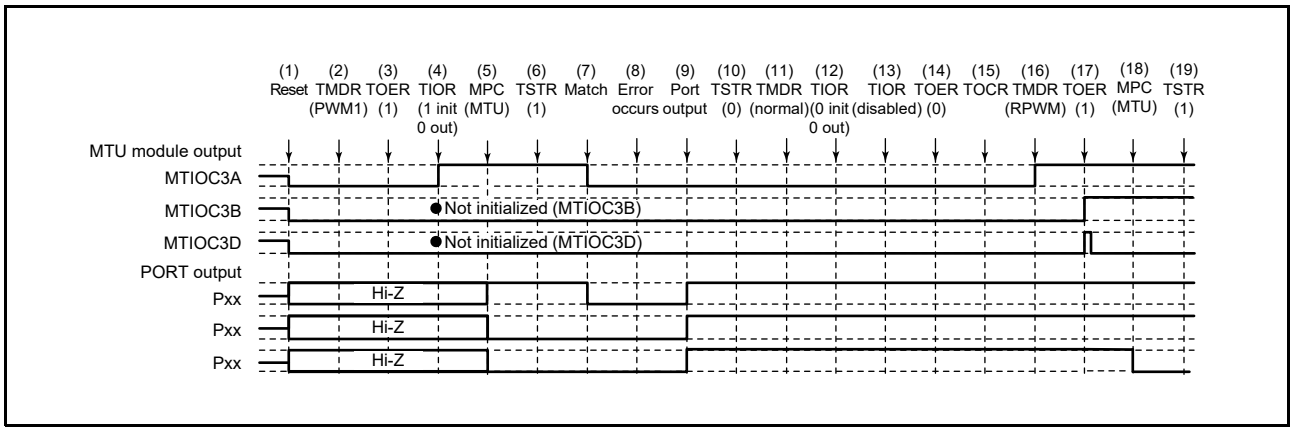

Figure 22.138 Error Occurrence in PWM Mode 1, Recovery in Reset-Synchronized PWM Mode

(1) to (14) are the same as in Figure 22.137.

(15) Select the reset-synchronized PWM mode output level and enable or disable cyclic output with the TOCR register.

(16) Set reset-synchronized PWM mode.

(17) Enable output in MTU3 and MTU4 with the TOER register.

(18) Use the MPC and the port mode register (PMR) for the I/O port to set up MTU output.

(19) Restart operation by setting the TSTR register.

(13) Operation When Error Occurs in PWM Mode 2 and Operation is Restarted in Normal Mode

Figure 22.139 shows a case in which an error occurs in PWM mode 2 and operation is restarted in normal mode after re-setting.

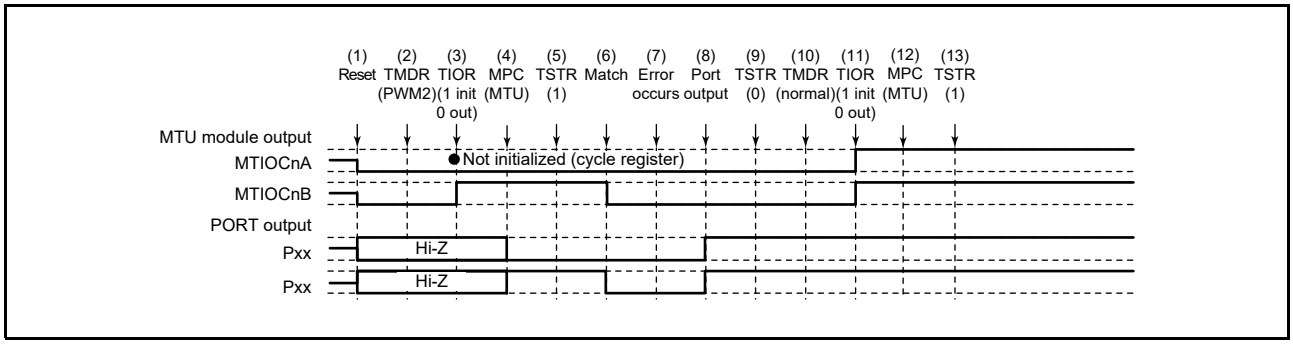

Figure 22.139 Error Occurrence in PWM Mode 2, Recovery in Normal Mode

(1) After a reset, the MTU output goes low and the ports enter high-impedance state.
(2) Set PWM mode 2.
(3) Initialize the pins with the TIOR register. (In the example, the initial output is a high level, and a low level is output on compare match occurrence. In PWM mode 2, the cycle register pins are not initialized. In the example, MTIOCnA is the cycle register.)
(4) Use the MPC and the port mode register (PMR) for the I/O port to set up MTU output.
(5) Start count operation by setting the TSTR register.
(6) Output goes low on compare match occurrence.
(7) An error occurs.
(8) Use the port direction register (PDR) and port mode register (PMR) for the input port pin to switch it to operate as a general output port pin, and the port output data register (PODR) to select output of the non-active level.
(9) Stop count operation by setting the TSTR register.
(10) Set normal mode.
(11) Initialize the pins with the TIOR register.
(12) Use the MPC and the port mode register (PMR) for the I/O port to set up MTU output.
(13) Restart operation by setting the TSTR register.

(14) Operation When Error Occurs in PWM Mode 2 and Operation is Restarted in PWM Mode 1

Figure 22.140 shows a case in which an error occurs in PWM mode 2 and operation is restarted in PWM mode 1 after re-setting.

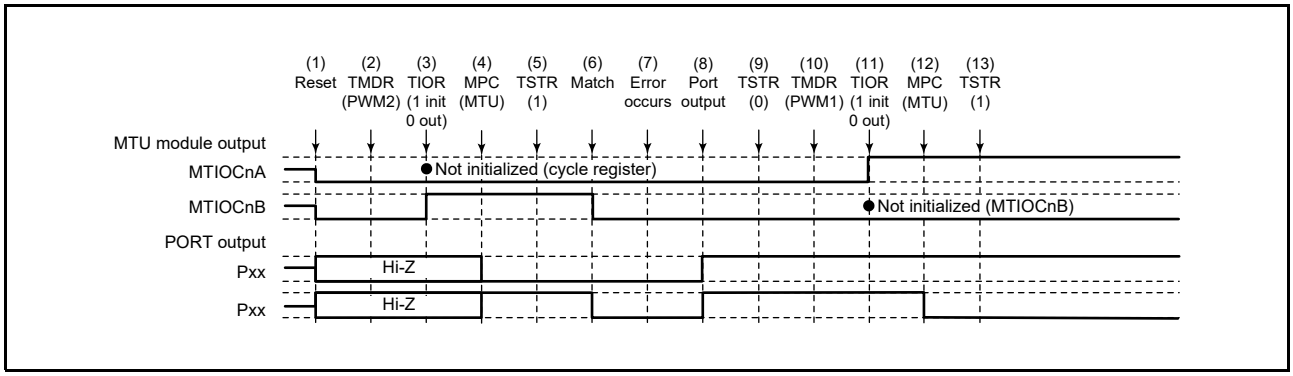

Figure 22.140 Error Occurrence in PWM Mode 2, Recovery in PWM Mode 1

(1) to (9) are the same as in Figure 22.139.
(10) Set PWM mode 1.
(11) Initialize the pins with the TIOR register. (In PWM mode 1, a waveform is not output on the MTIOCnB (MTIOCnD) pins. If a level is to be output, make the required general output port settings in the I/O port's port direction register (PDR) and port output data register (PODR).)
(12) Use the MPC and the port mode register (PMR) for the I/O port to set up MTU output.
(13) Restart operation by setting the TSTR register.

(15) Operation When Error Occurs in PWM Mode 2 and Operation is Restarted in PWM Mode 2

Figure 22.141 shows a case in which an error occurs in PWM mode 2 and operation is restarted in PWM mode 2 after re-setting.

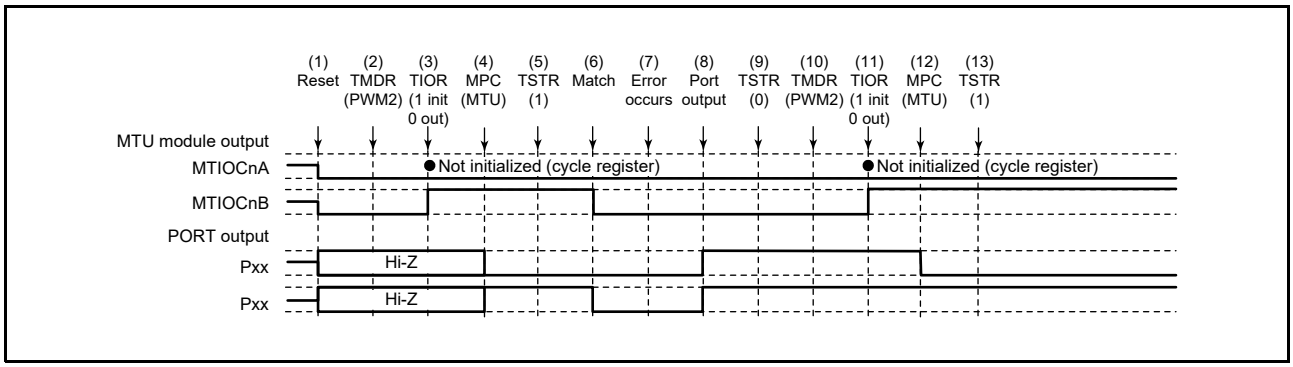

Figure 22.141 Error Occurrence in PWM Mode 2, Recovery in PWM Mode 2

(1) to (9) are the same as in Figure 22.139.
(10) This step is not necessary when restarting in PWM mode 2.
(11) Initialize the pins with the TIOR register. (In PWM mode 2, a waveform is not output on the cycle register pins. If a level is to be output, make the required general output port settings in the I/O port's port direction register (PDR) and port output data register (PODR).)
(12) Use the MPC and the port mode register (PMR) for the I/O port to set up MTU output.
(13) Restart operation by setting the TSTR register.

(16) Operation When Error Occurs in PWM Mode 2 and Operation is Restarted in Phase Counting Mode

Figure 22.142 shows a case in which an error occurs in PWM mode 2 and operation is restarted in phase counting mode after re-setting.

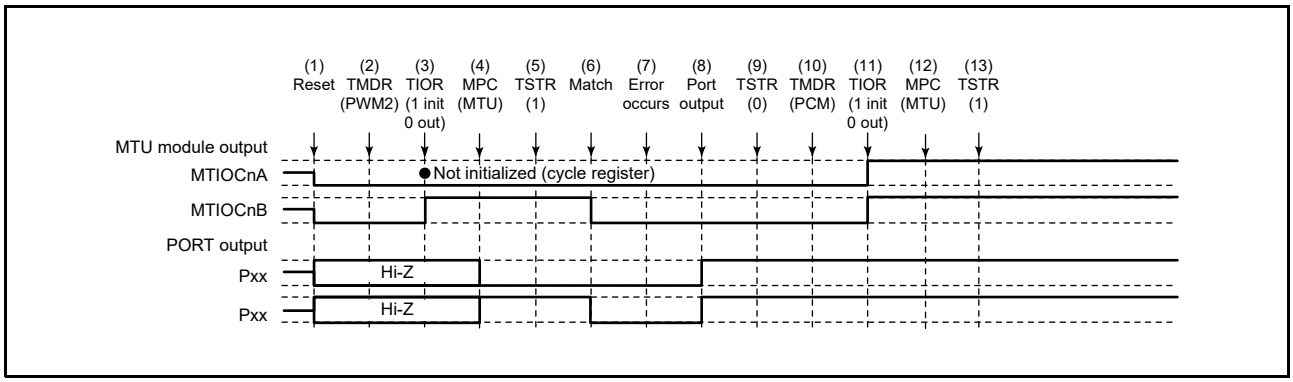

Figure 22.142 Error Occurrence in PWM Mode 2, Recovery in Phase Counting Mode

(1) to (9) are the same as in Figure 22.139.
(10) Set the phase counting mode.
(11) Initialize the pins with the TIOR register.
(12) Use the MPC and the port mode register (PMR) for the I/O port to set up MTU output.
(13) Restart operation by setting the TSTR register.

(17) Operation When Error Occurs in Phase Counting Mode and Operation is Restarted in Normal Mode

Figure 22.143 shows a case in which an error occurs in phase counting mode and operation is restarted in normal mode after re-setting.

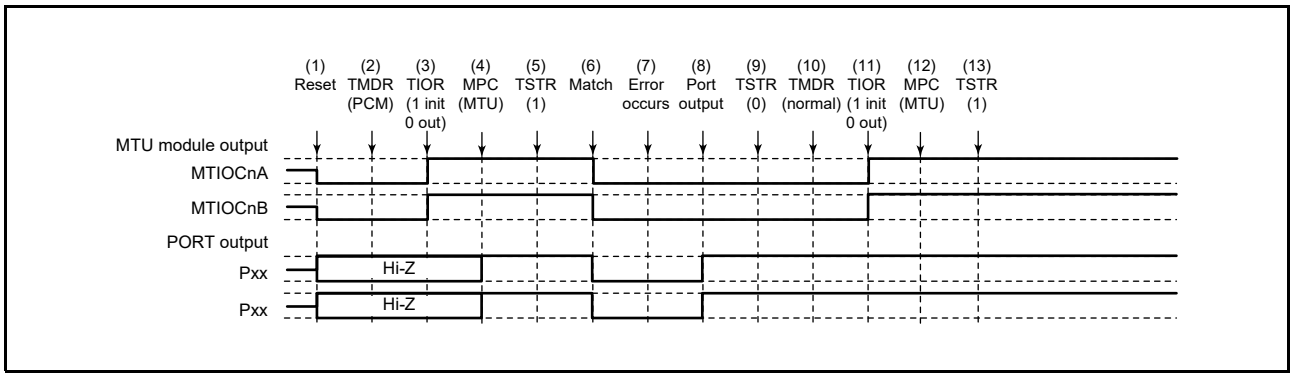

Figure 22.143 Error Occurrence in Phase Counting Mode, Recovery in Normal Mode

(1) After a reset, the MTU output goes low and the ports enter high-impedance state.
(2) Set phase counting mode.
(3) Initialize the pins with the TIOR register. (In the example, the initial output is a high level, and a low level is output on compare match occurrence.)
(4) Use the MPC and the port mode register (PMR) for the I/O port to set up MTU output.
(5) Start count operation by setting the TSTR register.
(6) Output goes low on compare match occurrence.
(7) An error occurs.
(8) Use the port direction register (PDR) and port mode register (PMR) for the input port pin to switch it to operate as a general output port pin, and the port output data register (PODR) to select output of the non-active level.
(9) Stop count operation by setting the TSTR register.
(10) Set normal mode.
(11) Initialize the pins with the TIOR register.
(12) Use the MPC and the port mode register (PMR) for the I/O port to set up MTU output.
(13) Restart operation by setting the TSTR register.

(18) Operation When Error Occurs in Phase Counting Mode and Operation is Restarted in PWM Mode 1

Figure 22.144 shows a case in which an error occurs in phase counting mode and operation is restarted in PWM mode 1 after re-setting.

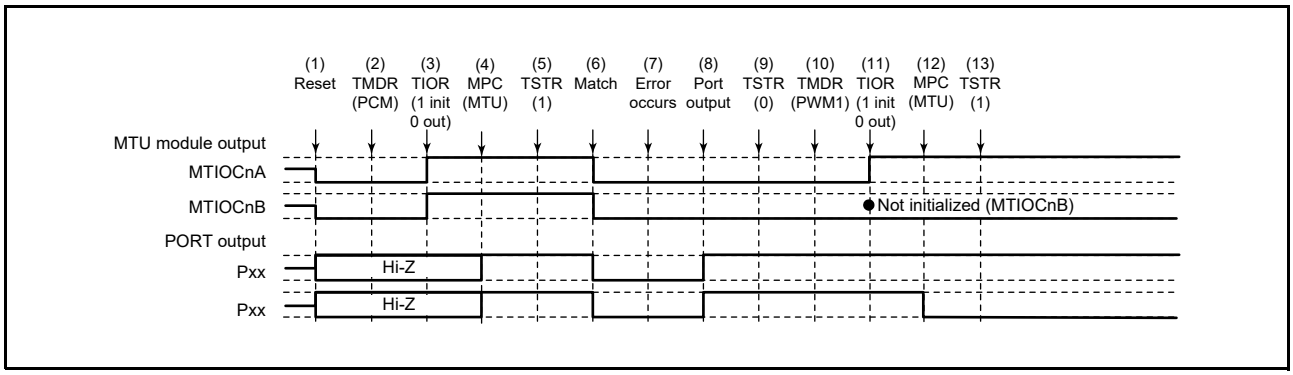

Figure 22.144 Error Occurrence in Phase Counting Mode, Recovery in PWM Mode 1

(1) to (9) are the same as in Figure 22.143.

(10) Set PWM mode 1.

(11) Initialize the pins with the TIOR register. (In PWM mode 1, a waveform is not output on the MTIOCnB (MTIOCnD) pins. If a level is to be output, make the required general output port settings in the I/O port's port direction register (PDR) and port output data register (PODR).)

(12) Use the MPC and the port mode register (PMR) for the I/O port to set up MTU output.

(13) Restart operation by setting the TSTR register.

(19) Operation When Error Occurs in Phase Counting Mode and Operation is Restarted in PWM Mode 2

Figure 22.145 shows a case in which an error occurs in phase counting mode and operation is restarted in PWM mode 2 after re-setting.

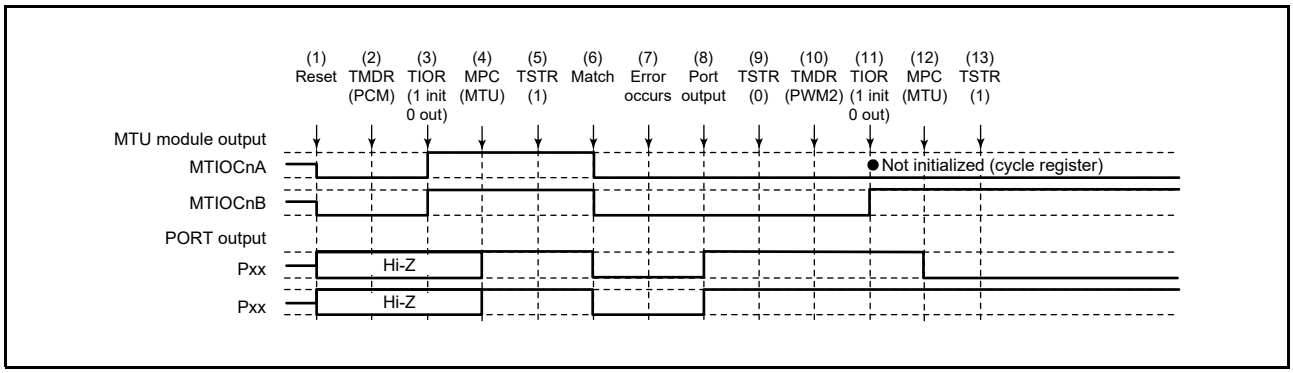

Figure 22.145 Error Occurrence in Phase Counting Mode, Recovery in PWM Mode 2

(1) to (9) are the same as in Figure 22.143.
(10) Set PWM mode 2.
(11) Initialize the pins with the TIOR register. (In PWM mode 1, a waveform is not output on the MTIOCnB (MTIOCnD) pins. If a level is to be output, make the required general output port settings in the I/O port's port direction register (PDR) and port output data register (PODR).)
(12) Use the MPC and the port mode register (PMR) for the I/O port to set up MTU output.
(13) Restart operation by setting the TSTR register.

(20) Operation When Error Occurs in Phase Counting Mode and Operation is Restarted in Phase Counting Mode

Figure 22.146 shows a case in which an error occurs in phase counting mode and operation is restarted in phase counting mode after re-setting.

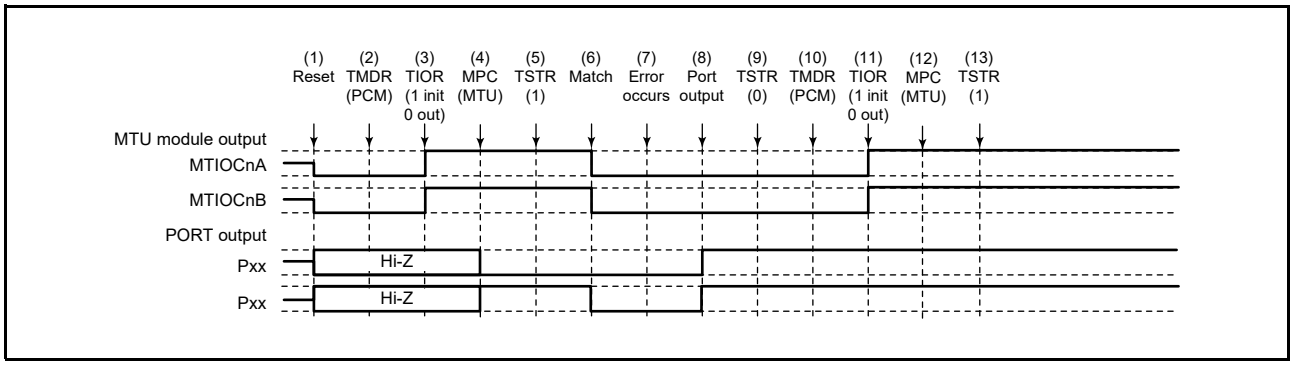

Figure 22.146 Error Occurrence in Phase Counting Mode, Recovery in Phase Counting Mode

(1) to (9) are the same as in Figure 22.143.
(10) This step is not necessary when restarting in phase counting mode.
(11) Initialize the pins with the TIOR register.
(12) Use the MPC and the port mode register (PMR) for the I/O port to set up MTU output.
(13) Restart operation by setting the TSTR register.

(21) Operation When Error Occurs in Complementary PWM Mode and Operation is Restarted in Normal Mode

Figure 22.147 shows a case in which an error occurs in complementary PWM mode and operation is restarted in normal mode after re-setting.

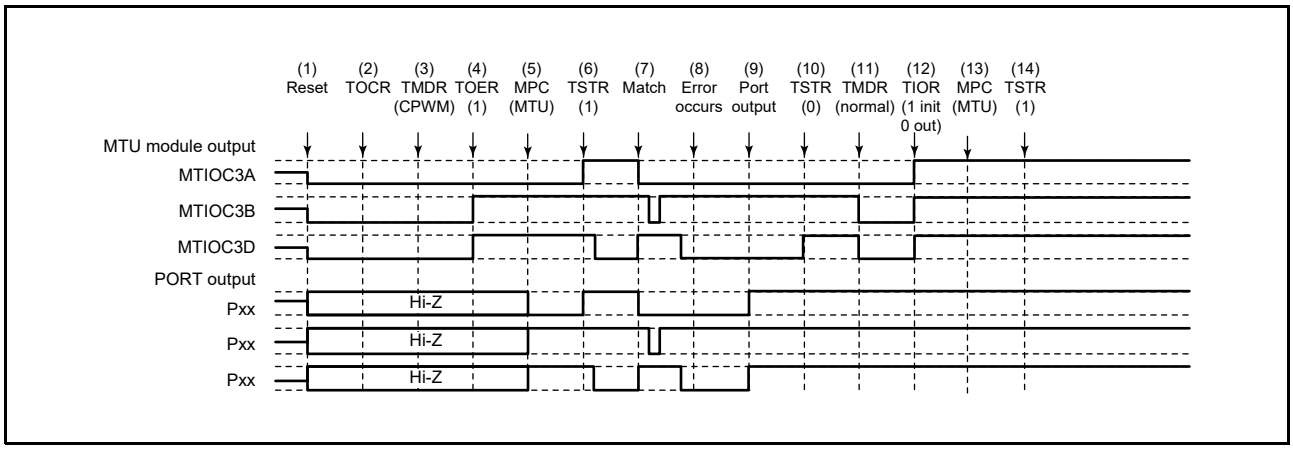

Figure 22.147 Error Occurrence in Complementary PWM Mode, Recovery in Normal Mode

(1) After a reset, the MTU output goes low and the ports enter high-impedance state.
(2) Select the complementary PWM mode output level and enable or disable cyclic output with the TOCR register.
(3) Set complementary PWM mode.
(4) Enable output in MTU3 and MTU4 with the TOER register.
(5) Use the MPC and the port mode register (PMR) for the I/O port to set up MTU output.
(6) Start count operation by setting the TSTR register.
(7) The complementary PWM waveform is output on compare match occurrence.
(8) An error occurs.
(9) Use the port direction register (PDR) and port mode register (PMR) for the input port pin to switch it to operate as a general output port pin, and the port output data register (PODR) to select output of the non-active level.
(10) Stop count operation by setting the TSTR register. (MTU output becomes the initial complementary PWM output value).
(11) Set normal mode (MTU output goes low).
(12) Initialize the pins with the TIOR register.
(13) Use the MPC and the port mode register (PMR) for the I/O port to set up MTU output.
(14) Restart operation by setting the TSTR register.

(22) Operation When Error Occurs in Complementary PWM Mode and Operation is Restarted in PWM Mode 1

Figure 22.148 shows a case in which an error occurs in complementary PWM mode and operation is restarted in PWM mode 1 after re-setting.

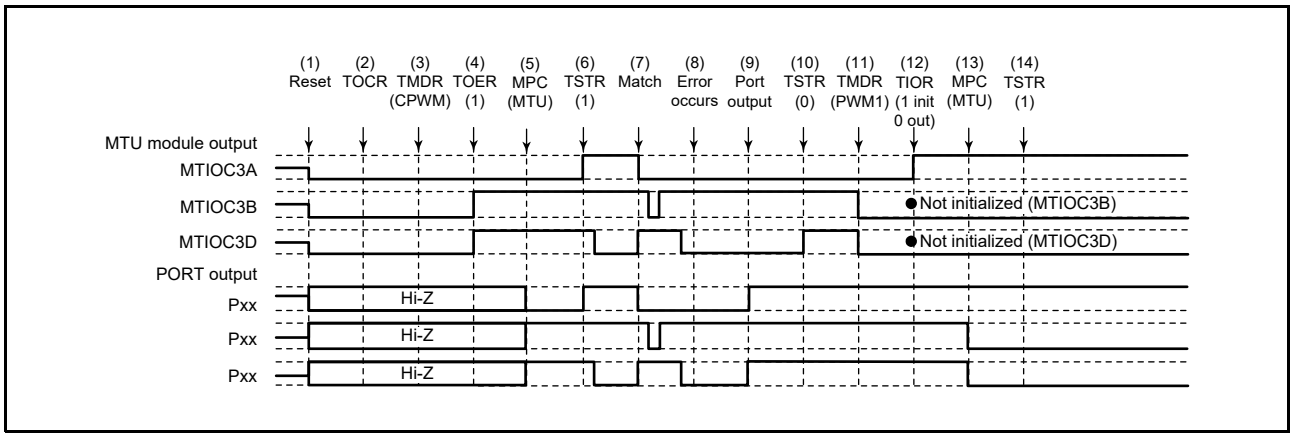

Figure 22.148 Error Occurrence in Complementary PWM Mode, Recovery in PWM Mode 1

(1) to (10) are the same as in Figure 22.147.

(11) Set PWM mode 1 (MTU output goes low).

(12) Initialize the pins with the TIOR register. (In PWM mode 1, a waveform is not output on the MTIOCnB (MTIOCnD) pins. If a level is to be output, make the required general output port settings in the I/O port's port direction register (PDR) and port output data register (PODR).)

(13) Use the MPC and the port mode register (PMR) for the I/O port to set up MTU output.

(14) Restart operation by setting the TSTR register.

(23) Operation When Error Occurs in Complementary PWM Mode and Operation is Restarted in Complementary PWM Mode

Figure 22.149 shows a case in which an error occurs in complementary PWM mode and operation is restarted in complementary PWM mode after re-setting (when operation is restarted using the cycle and duty settings at the time of stopping the counter).

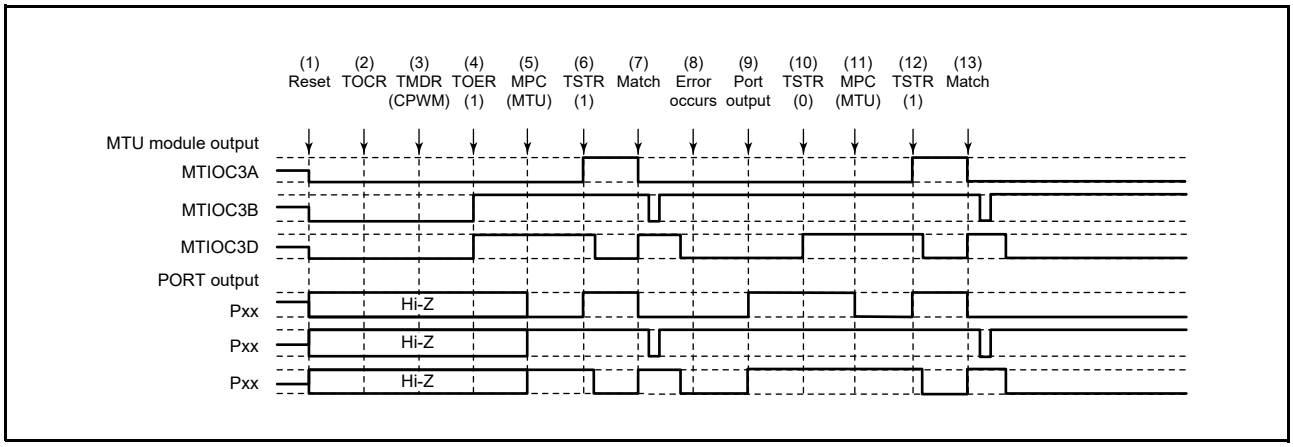

Figure 22.149 Error Occurrence in Complementary PWM Mode, Recovery in Complementary PWM Mode

(1) to (10) are the same as in Figure 22.147.

(11) Use the MPC and the port mode register (PMR) for the I/O port to set up MTU output.

(12) Restart operation by setting the TSTR register.

(13) The complementary PWM waveform is output on compare match occurrence.

(24) Operation When Error Occurs in Complementary PWM Mode and Operation is Restarted in Complementary PWM Mode with New Settings

Figure 22.150 shows a case in which an error occurs in complementary PWM mode and operation is restarted in complementary PWM mode after re-setting (operation is restarted using new cycle and duty settings).

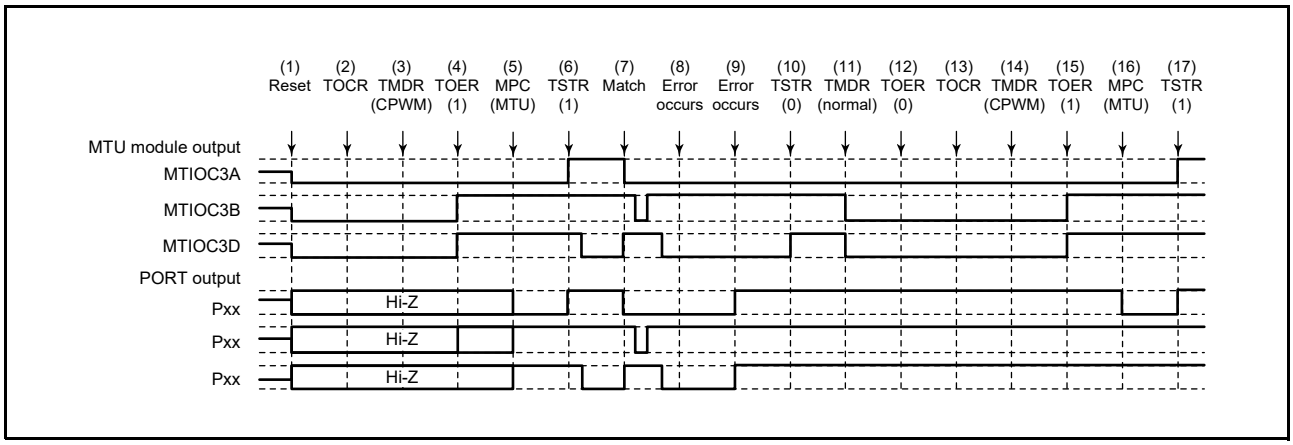

Figure 22.150 Error Occurrence in Complementary PWM Mode, Recovery in Complementary PWM Mode

(1) to (10) are the same as in Figure 22.147.
(11) Set normal mode and make new settings (MTU output goes low).
(12) Disable output in MTU3 and MTU4 with the TOER register.
(13) Select the complementary PWM mode output level and enable or disable cyclic output with the TOCR register.
(14) Set complementary PWM mode.
(15) Enable output in MTU3 and MTU4 with the TOER register.
(16) Use the MPC and the port mode register (PMR) for the I/O port to set up MTU output.
(17) Restart operation by setting the TSTR register.

(25) Operation When Error Occurs in Complementary PWM Mode and Operation is Restarted in Reset-Synchronized PWM Mode

Figure 22.151 shows a case in which an error occurs in complementary PWM mode and operation is restarted in reset-synchronized PWM mode after re-setting.

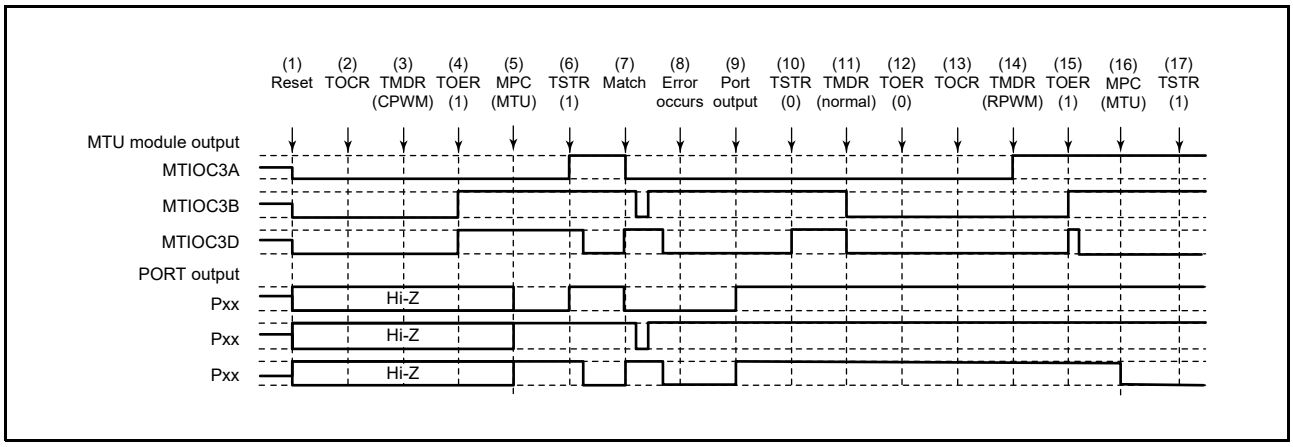

Figure 22.151 Error Occurrence in Complementary PWM Mode, Recovery in Reset-Synchronized PWM Mode

(1) to (10) are the same as in Figure 22.147.
(11) Set normal mode (MTU output goes low).
(12) Disable output in MTU3 and MTU4 with the TOER register.
(13) Select the reset-synchronized PWM mode output level and enable or disable cyclic output with the TOCR register.
(14) Set reset-synchronized PWM mode.
(15) Enable output in MTU3 and MTU4 with the TOER register.
(16) Use the MPC and the port mode register (PMR) for the I/O port to set up MTU output.
(17) Restart operation by setting the TSTR register.

(26) Operation When Error Occurs in Reset-Synchronized PWM Mode and Operation is Restarted in Normal Mode

Figure 22.152 shows a case in which an error occurs in reset-synchronized PWM mode and operation is restarted in normal mode after re-setting.

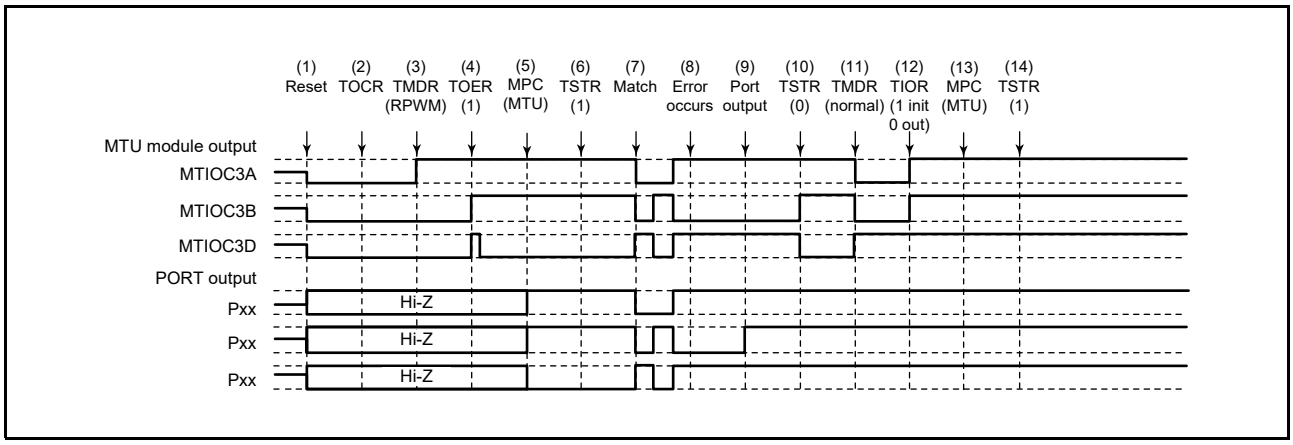

Figure 22.152 Error Occurrence in Reset-Synchronized PWM Mode, Recovery in Normal Mode

(1) After a reset, the MTU output goes low and the ports enter high-impedance state.
(2) Select the reset-synchronized PWM mode output level and enable or disable cyclic output with the TOCR register.
(3) Set reset-synchronized PWM mode.
(4) Enable output in MTU3 and MTU4 with the TOER register.
(5) Use the MPC and the port mode register (PMR) for the I/O port to set up MTU output.
(6) Start count operation by setting the TSTR register.
(7) The reset-synchronized PWM waveform is output on compare match occurrence.
(8) An error occurs.
(9) Use the port direction register (PDR) and port mode register (PMR) for the input port pin to switch it to operate as a general output port pin, and the port output data register (PODR) to select output of the non-active level.
(10) Stop count operation by setting the TSTR register. (MTU output becomes the initial reset-synchronized PWM output value.)
(11) Set normal mode (positive-phase MTU output goes low, and negative-phase output goes high).
(12) Initialize the pins with the TIOR register.
(13) Use the MPC and the port mode register (PMR) for the I/O port to set up MTU output.
(14) Restart operation by setting the TSTR register.

(27) Operation When Error Occurs in Reset-Synchronized PWM Mode and Operation is Restarted in PWM Mode 1

Figure 22.153 shows a case in which an error occurs in reset-synchronized PWM mode and operation is restarted in PWM mode 1 after re-setting.

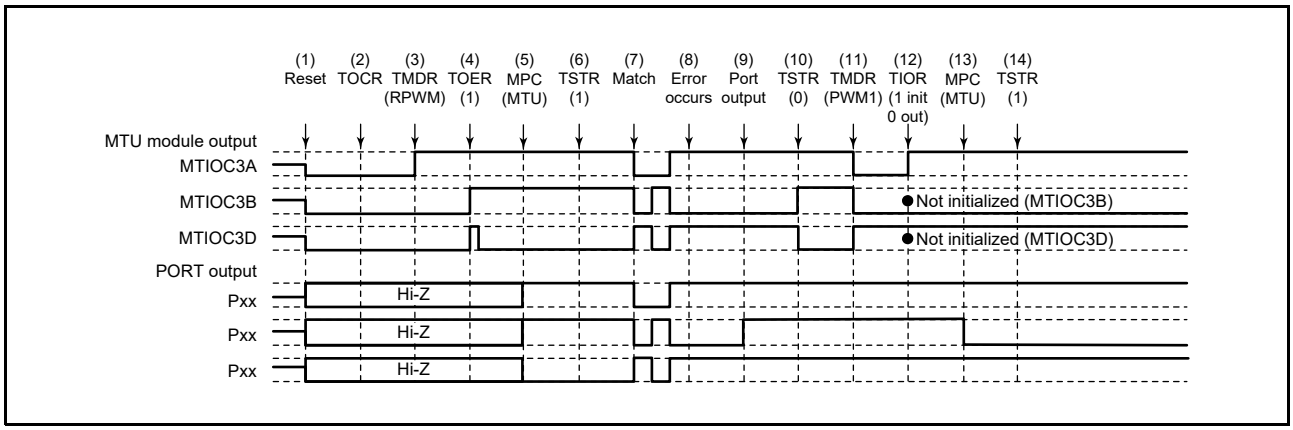

Figure 22.153 Error Occurrence in Reset-Synchronized PWM Mode, Recovery in PWM Mode 1

(1) to (10) are the same as in Figure 22.152.

(11) Set PWM mode 1 (positive-phase MTU output goes low, and negative-phase output goes high).

(12) Initialize the pins with the TIOR register. (In PWM mode 1, a waveform is not output on the MTIOCnB (MTIOCnD) pins. If a level is to be output, make the required general output port settings in the I/O port's port direction register (PDR) and port output data register (PODR).)

(13) Use the MPC and the port mode register (PMR) for the I/O port to set up MTU output.

(14) Restart operation by setting the TSTR register.

(28) Operation When Error Occurs in Reset-Synchronized PWM Mode and Operation is Restarted in Complementary PWM Mode

Figure 22.154 shows a case in which an error occurs in reset-synchronized PWM mode and operation is restarted in complementary PWM mode after re-setting.

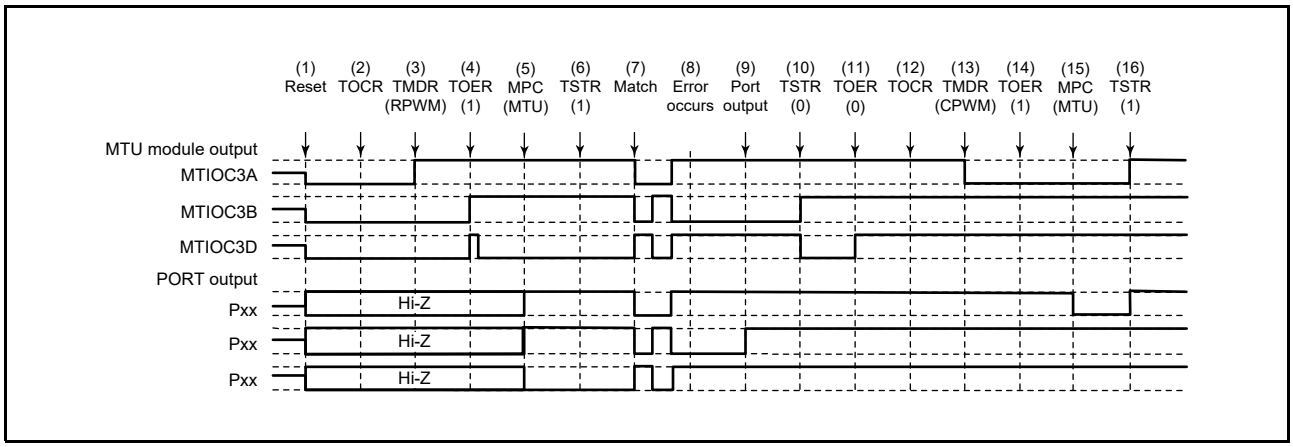

Figure 22.154 Error Occurrence in Reset-Synchronized PWM Mode, Recovery in Complementary PWM Mode

(1) to (10) are the same as in Figure 22.152.
(11) Disable output in MTU3 and MTU4 with the TOER register.
(12) Select the complementary PWM mode output level and enable or disable cyclic output with the TOCR register.
(13) Set complementary PWM mode (MTU cyclic output pin goes low).
(14) Enable output in MTU3 and MTU4 with the TOER register.
(15) Use the MPC and the port mode register (PMR) for the I/O port to set up MTU output.
(16) Restart operation by setting the TSTR register.

(29) Operation When Error Occurs in Reset-Synchronized PWM Mode and Operation is Restarted in Reset-Synchronized PWM Mode

Figure 22.155 shows a case in which an error occurs in reset-synchronized PWM mode and operation is restarted in reset-synchronized PWM mode after re-setting.

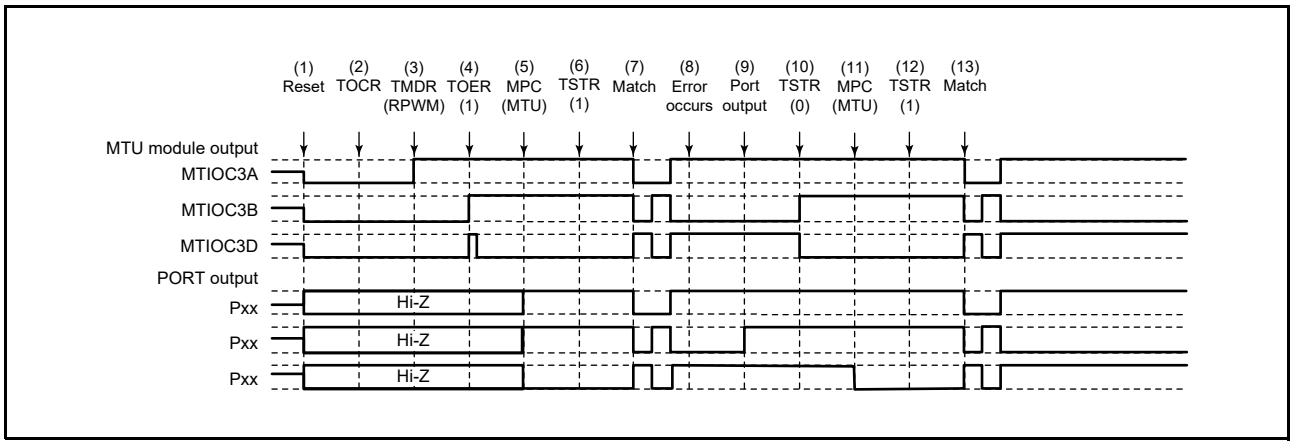

Figure 22.155 Error Occurrence in Reset-Synchronized PWM Mode, Recovery in Reset-Synchronized PWM Mode

(1) to (10) are the same as in Figure 22.152.

(11) Use the MPC and the port mode register (PMR) for the I/O port to set up MTU output.

(12) Restart operation by setting the TSTR register.

(13) The reset-synchronized PWM waveform is output on compare match occurrence.

22.8 Operations Linked by the ELC

22.8.1 Event Signal Output to the ELC

The MTU is capable of operation linked with another module set in advance when its interrupt request signal is used as an event signal by the event link controller (ELC).
The MTU outputs the event signal regardless of the setting of the corresponding interrupt request enable bit.

22.8.2 MTU Operations in Response to Receiving Event Signals from the ELC

The MTU can perform the following operations in response to the event set in advance in the ELSRn register of the event link controller (ELC).

(1) Count Start Operation

The MTU is selected the count start operation when using the ELOPA and ELOPB registers setting of the ELC. The ELOPA register functions to MTU1 to MTU3, and ELOPB register functions to MTU4. The TMDR register of the channel set by MTU should be set to the value after reset, 00h. When the specified event is generated by the ELSRn register, the TSTR.CSTn bit shown in Table 22.60 is set to 1, then the MTU counter is started.
However, when the specified event is generated while the TSTR.CSTn bit is set to 1, the event is disabled. Table 22.60 lists the TSTR register bits used for each channel.
For details on the count start operation setting, refer to section 22.3.1, (1) Counter Operation.

Table 22.60 Linkage Operating TSTR Register by the ELC

Channel No.	TSTR Register
MTU1	TSTR.CST1 bit
MTU2	TSTR.CST2 bit
MTU3	TSTR.CST3 bit
MTU4	TSTR.CST4 bit

(2) Input Capture Operation

The MTU is selected the input capture operation when using the ELOPA and ELOPB registers setting of the ELC. The ELOPA register handles MTU1 to MTU3, and ELOPB register handles MTU4. The TMDR register of the channel set by MTU should be set to the value after reset, 00h. When the specified event is generated by the ELSRn register, then the TCNT counter value capture to TGR register. When using the input capture operation, after setting the bit of the TIOR register to the input capture, the TSTR.CSTn bit should be set to 1, and start the counter.
Then, the TIOCnA pin (input capture pin) input is disabled.
Table 22.61 lists the timer general register and timer I/O control register used in the input capture operation by the ELC.
For details on the input capture setting, refer to section 22.3.1, (3) Input Capture Function.

Table 22.61 Timer General Register and Timer I/O Control Register Used in the Input Capture Operation by the ELC

Channel No.	Register Name	Bit Name of TIOR Register
MTU1	MTU1.TGRA register	MTU1.TIOR.IOA[3:0] bits
MTU2	MTU2.TGRA register	MTU2.TIOR.IOA[3:0] bits
MTU3	MTU3.TGRA register	MTU3.TIORH.IOA[3:0] bits
MTU4	MTU4.TGRA register	MTU4.TIORH.IOA[3:0] bits

(3) Counter Restart Operation

The MTU is selected the count start operation when using the ELOPA and ELOPB registers setting of the ELC. The ELOPA register functions MTU1 to MTU3, and ELOPB register functions MTU4. The TMDR register of the channel set by MTU should be set to the value after reset, 00h. When the specified event is generated by the ELSRn register, then the TCNT counter value is rewritten to initial value. When the TSTR.CSTn bit is 1, count operation can be continued. For details on the TSTR.CSTn bit, refer to Table 22.60.

22.8.3 Notes on MTU by Event Signal Reception from the ELC

The following describes usage notes when using MTU by the event link operation.

(1) Count Start Operation

When the specified event is generated by the ELSRn register while write cycle is performed to the TSTR.CSTn bit, the write cycle is not performed to the TSTR.CSTn bit, and the setting to 1 takes precedence by generated event.

(2) Count Restart Operation

When the specified event is generated by the ELSRn register while write cycle is performed to the TCNT counter, the write cycle is not performed to the TCNT counter, and count value initialization takes precedence by generated event.

23. Port Output Enable 2 (POE2a)

The port output enable 2 (POE) module can be used to place the states of the pins for complementary PWM output by the MTU (MTIOC3B, MTIOC3D, MTIOC4A, MTIOC4B, MTIOC4C, and MTIOC4D), and the states of pins for MTU0 (MTIOC0A, MTIOC0B, MTIOC0C, and MTIOC0D) in the high-impedance in response to changes in the input levels on the POE0# to POE3# and POE8# pins, in the output levels on pins for complementary PWM output by the MTU, oscillation stop detection by the clock generation circuit, and changes to register settings (SPOER) or event signal input from the event link controller (ELC).
It can also generate simultaneous interrupt requests.
In this section, “PCLK” is used to refer to PCLKB.

23.1 Overview

Table 23.1 lists the specifications of the POE, and Figure 23.1 shows a block diagram of the POE.

Table 23.1 POE Specifications

Item	Description
High-impedance is controlled by the input level detection	• Falling-edge detection or sampling of the low level 16 times at PCLK/8, PCLK/16, or PCLK/128 clock cycles can be set for each of the POE0# to POE3# and POE8# input pins. • Pins for complementary PWM output from the MTU can be placed in the high-impedance on detection of falling edges or sampling of the low level on the POE0# to POE3# pins. • Pins for output from MTU0 can be placed in the high-impedance on detection of falling edges or sampling of the low level on the POE8# pin.
High-impedance is controlled by the output level comparison	• Levels output on pins for complementary PWM output from the MTU are compared, and when simultaneous output of the active level continues for one or more clock cycles, the pins can be placed in the high-impedance.
High-impedance is controlled by the oscillation stop detection	• Pins for complementary PWM output from the MTU and output pins for MTU0 can be placed in the high-impedance when oscillation by the clock generation circuit stops.
High-impedance is controlled by software (registers)	• Pins for complementary PWM output from the MTU and output pins for MTU0 can be placed in the high-impedance by modifying settings of POE registers.
High-impedance is controlled by the event signal	• Pins for complementary PWM output from the MTU and output pins for MTU0 can be placed in the high-impedance in response to an event signal from the event link controller (ELC).
Interrupts	• Interrupts can be generated in response to the results of POE0# to POE3# and POE8# input-level detection and MTU complementary PWM output-level comparison.

The POE has input-level detection circuits, output-level comparison circuits, an input for the oscillation stop detection signal from the clock generation circuit, and a high-impedance request/interrupt request generating circuit as shown in Figure 23.1.

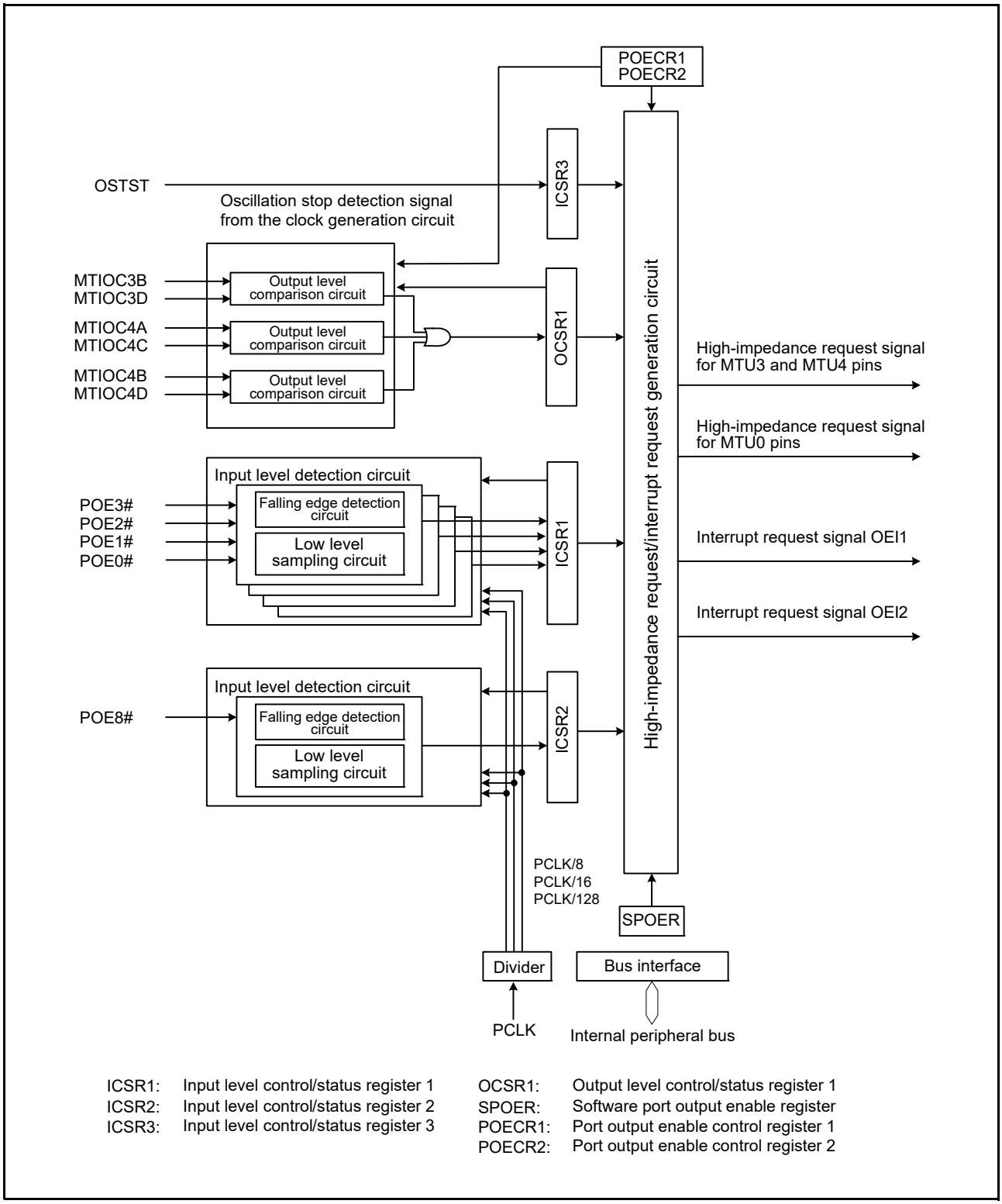

Figure 23.1 POE Block Diagram

Table 23.2 lists I/O pins to be used by the POE.

Table 23.2 POE I/O Pins

Pin Name	I/O	Description
POE0# to POE3#	Input	Request signals to place the pins for MTU complementary PWM output in high-impedance.
POE8#	Input	Request signal to place the MTU0 output pins in high-impedance.
MTIOC3B	Output	MTU3 complementary PWM output pin
MTIOC3D	Output	MTU3 complementary PWM output pin
MTIOC4A	Output	MTU4 complementary PWM output pin
MTIOC4B	Output	MTU4 complementary PWM output pin
MTIOC4C	Output	MTU4 complementary PWM output pin
MTIOC4D	Output	MTU4 complementary PWM output pin
MTIOC0A	Output	MTU0 output pin
MTIOC0B	Output	MTU0 output pin
MTIOC0C	Output	MTU0 output pin
MTIOC0D	Output	MTU0 output pin

Table 23.3 lists output-level comparisons with pin combinations.

Table 23.3 Pin Combinations

Pin Combination	I/O	Description
MTIOC3B and MTIOC3D	Output	Pin combinations for output-level comparison and high-impedance control can be selected by POE registers. The pins for MTU complementary PWM output are placed in high-impedance when the pins simultaneously output an active level for one or more PCLK clock cycles. (When the MTU.TOCR1.TOCS bit = 0: The active level is low level if the MTU.TOCR1.OLSP and OLSN bits are 0, and the active level is high level if the MTU.TOCR1.OLSP and OLSN bits are 1. When the MTU.TOCR1.TOCS bit = 1: The active level is low level if the MTU.TOCR2.OLS3N, OLS3P, OLS2N, OLS2P, OLS1N, and OLS1P bits are 0, and the active level is high level if the MTU.TOCR2.OLS3N, OLS3P, OLS2N, OLS2P, OLS1N, and OLS1P bits are 1.)
MTIOC4A and MTIOC4C	Output	
MTIOC4B and MTIOC4D	Output	

23.2 Register Descriptions

23.2.1 Input Level Control/Status Register 1 (ICSR1)

Address(es): 0008 8900h

	b15	b14	b13	b12	b11	b10	b9	b8	b7	b6	b5	b4	b3	b2	b1	b0
	POE3F	POE2F	POE1F	POE0F	—	—	—	PIE1	POE3M[1:0]		POE2M[1:0]		POE1M[1:0]		POE0M[1:0]	
Value after reset:	0	0	0	0	0	0	0	0	0	0	0	0	0	0	0	0

Bit	Symbol	Bit Name	Description	R/W
b1, b0	POE0M[1:0]	POE0 Mode Select	b1 b0 0 0: Accepts a high-impedance request on the falling edge of the POE0# pin input. 0 1: Accepts a high-impedance request when the POE0# pin input has been sampled 16 times at PCLK/8 clock cycles and all are low level. 1 0: Accepts a high-impedance request when POE0# input has been sampled 16 times at PCLK/16 clock pulses and all are low level. 1 1: Accepts a high-impedance request when POE0# input has been sampled 16 times at PCLK/128 clock pulses and all are low level.	R/W*1
b3, b2	POE1M[1:0]	POE1 Mode Select	b3 b2 0 0: Accepts a high-impedance request on the falling edge of the POE1# pin input. 0 1: Accepts a high-impedance request when the POE1# pin input has been sampled 16 times at PCLK/8 clock cycles and all are low level. 1 0: Accepts a high-impedance request when POE1# input has been sampled 16 times at PCLK/16 clock pulses and all are low level. 1 1: Accepts a high-impedance request when POE1# input has been sampled 16 times at PCLK/128 clock pulses and all are low level.	R/W*1
b5, b4	POE2M[1:0]	POE2 Mode Select	b5 b4 0 0: Accepts a high-impedance request on the falling edge of the POE2# pin input. 0 1: Accepts a high-impedance request when the POE2# pin input has been sampled 16 times at PCLK/8 clock cycles and all are low level. 1 0: Accepts a high-impedance request when POE2# input has been sampled 16 times at PCLK/16 clock pulses and all are low level. 1 1: Accepts a high-impedance request when POE2# input has been sampled 16 times at PCLK/128 clock pulses and all are low level.	R/W*1
b7, b6	POE3M[1:0]	POE3 Mode Select	b7 b6 0 0: Accepts a high-impedance request on the falling edge of the POE3# pin input. 0 1: Accepts a high-impedance request when the POE3# pin input has been sampled 16 times at PCLK/8 clock cycles and all are low level. 1 0: Accepts a high-impedance request when POE3# input has been sampled 16 times at PCLK/16 clock pulses and all are low level. 1 1: Accepts a high-impedance request when POE3# input has been sampled 16 times at PCLK/128 clock pulses and all are low level.	R/W*1
b8	PIE1	Port Interrupt Enable 1	0: OEI1 interrupt requests by the input level detection disabled 1: OEI1 interrupt requests by the input level detection enabled	R/W
b11 to b9	—	Reserved	These bits are read as 0. The write value should be 0.	R/W
b12	POE0F	POE0 Flag	0: Indicates that a high-impedance request has not been input to the POE0# pin. 1: Indicates that a high-impedance request has been input to the POE0# pin.	R/(W)*2
b13	POE1F	POE1 Flag	0: Indicates that a high-impedance request has not been input to the POE1# pin. 1: Indicates that a high-impedance request has been input to the POE1# pin.	R/(W)*2
b14	POE2F	POE2 Flag	0: Indicates that a high-impedance request has not been input to the POE2# pin. 1: Indicates that a high-impedance request has been input to the POE2# pin.	R/(W)*2
b15	POE3F	POE3 Flag	0: Indicates that a high-impedance request has not been input to the POE3# pin. 1: Indicates that a high-impedance request has been input to the POE3# pin.	R/(W)*2

Note 1. Can be modified only once after a reset.
Note 2. Writing 0 to this bit after reading it as 1 clears the flag and is the only allowed way.

When low-level sampling has been set by the POE0M[1:0] to POE3M[1:0] bits, writing 0 to the POE0F to POE3F flags requires high-level input on the POE0# to POE3# pins.
For details, refer to section 23.3.6, Release from the High-Impedance.

PIE1 Bit (Port Interrupt Enable 1)

This bit enables or disables OEI1 interrupt requests when any one of the POE0F to POE3F flags is set to 1.

POE0F Flag (POE0 Flag)

This flag indicates that a high-impedance request has been input to the POE0# pin.
[Setting condition]

- When the input set by POE0M[1:0] occurs at the POE0# pin

[Clearing condition]

- By writing 0 to POE0F after reading POE0F = 1

POE1F Flag (POE1 Flag)

This flag indicates that a high-impedance request has been input to the POE1# pin.
[Setting condition]

- When the input set by POE1M[1:0] occurs at the POE1# pin

[Clearing condition]

- By writing 0 to POE1F after reading POE1F = 1

POE2F Flag (POE2 Flag)

This flag indicates that a high-impedance request has been input to the POE2# pin.
[Setting condition]

- When the input set by POE2M[1:0] occurs at the POE2# pin

[Clearing condition]

- By writing 0 to POE2F after reading POE2F = 1

POE3F Flag (POE3 Flag)

This flag indicates that a high-impedance request has been input to the POE3# pin.
[Setting condition]

- When the input set by POE3M[1:0] occurs at the POE3# pin

[Clearing condition]

- By writing 0 to POE3F after reading POE3F = 1

23.2.2 Output Level Control/Status Register 1 (OCSR1)

Address(es): 0008 8902h

	b15	b14	b13	b12	b11	b10	b9	b8	b7	b6	b5	b4	b3	b2	b1	b0
	OSF1	—	—	—	—	—	OCE1	OIE1	—	—	—	—	—	—	—	—
Value after reset:	0	0	0	0	0	0	0	0	0	0	0	0	0	0	0	0

Bit	Symbol	Bit Name	Description	R/W
b7 to b0	—	Reserved	These bits are read as 0. The write value should be 0.	R/W
b8	OIE1	Output Short Interrupt Enable 1	0: OEI1 interrupt requests by the output level comparison disabled 1: OEI1 interrupt requests by the output level comparison enabled	R/W
b9	OCE1	Output Short High-Impedance Enable 1	0: Does not place the pins in high-impedance. 1: Places the pins in high-impedance.	R/W*1
b14 to b10	—	Reserved	These bits are read as 0. The write value should be 0.	R/W
b15	OSF1	Output Short Flag 1	0: Indicates that outputs have not simultaneously become an active level. 1: Indicates that outputs have simultaneously become an active level.	R/(W)*2

Note 1. Can be modified only once after a reset.
Note 2. Writing 0 to this bit after reading it as 1 clears the flag and is the only allowed way.

OIE1 Bit (Output Short Interrupt Enable 1)

This bit enables or disables OEI1 interrupt requests when the OSF1 flag is set to 1.

OCE1 Bit (Output Short High-Impedance Enable 1)

This bit specifies whether to place the MTU complementary PWM output pins in high-impedance when the OSF1 flag is set to 1.

OSF1 Flag (Output Short Flag 1)

This flag indicates that any one of the three pairs of two-phase outputs for MTU complementary PWM output to be compared in Table 23.3 has simultaneously become an active level. If the POECR2.PnCZEA (n = 1, 2, 3) bits are 0 or the output comparison function of the MTU is not enabled, the OSF1 flag will not be set to 1 even if both pins in the corresponding complementary output pair of the MTU are simultaneously active. The active levels are determined by the MTU.TOCR1 and TOCR2 registers.

[Setting condition]

- When any one of the three pairs of two-phase outputs has simultaneously become an active level*1

[Clearing condition]

- By writing 0 to OSF1 after reading OSF1 = 1
  The complementary output pins for the MTU must be at the inactive level when 0 is written to the flag.
  For details, refer to section 23.3.6, Release from the High-Impedance.

Note 1. The setting condition is judged only by the level of the pin regardless the setting of the MPC.PmnPFS register.

23.2.3 Input Level Control/Status Register 2 (ICSR2)

Address(es): 0008 8908h

	b15	b14	b13	b12	b11	b10	b9	b8	b7	b6	b5	b4	b3	b2	b1	b0
	—	—	—	POE8F	—	—	POE8E	PIE2	—	—	—	—	—	—	POE8M[1:0]	
Value after reset:	0	0	0	0	0	0	0	0	0	0	0	0	0	0	0	0

Bit	Symbol	Bit Name	Description	R/W
b1, b0	POE8M[1:0]	POE8 Mode Select	b1 b0 0 0: Accepts a high-impedance request on the falling edge of the POE8# pin input 0 1: Accepts a high-impedance request when the POE8# pin input has been sampled 16 times at PCLK/8 clock cycles and all are low level. 1 0: Accepts a high-impedance request when the POE8# pin input has been sampled 16 times at PCLK/16 clock cycles and all are low level. 1 1: Accepts a high-impedance request when the POE8# pin input has been sampled 16 times at PCLK/128 clock cycles and all are low level.	R/W*1
b7 to b2	—	Reserved	These bits are read as 0. The write value should be 0.	R/W
b8	PIE2	Port Interrupt Enable 2	0: OEI2 interrupt requests disabled 1: OEI2 interrupt requests enabled	R/W
b9	POE8E	POE8 High-Impedance Enable	0: Does not place the MTIOC0A, MTIOC0B, MTIOC0C, and MTIOC0D pins in high-impedance. 1: Places the MTIOC0A, MTIOC0B, MTIOC0C, and MTIOC0D pins in high-impedance.	R/W*1
b11, b10	—	Reserved	These bits are read as 0. The write value should be 0.	R/W
b12	POE8F	POE8 Flag	0: Indicates that a high-impedance request has not been input to the POE8# pin. 1: Indicates that a high-impedance request has been input to the POE8# pin.	R/(W)*2
b15 to b13	—	Reserved	These bits are read as 0. The write value should be 0.	R/W

Note 1. Can be modified only once after a reset.
Note 2. Writing 0 to this bit after reading it as 1 clears the flag and is the only allowed way.

PIE2 Bit (Port Interrupt Enable 2)

This bit enables or disables OEI2 interrupt requests when the POE8F flag is set to 1.

POE8E Bit (POE8 High-Impedance Enable)

This bit specifies whether to place the MTU0 pins in high-impedance when the POE8F flag is set to 1.

POE8F Flag (POE8 Flag)

This flag indicates that a high-impedance request has been input to the POE8# pin.

[Setting condition]

- When the input set by ICSR2.POE8M[1:0] bits occurs at the POE8# pin

[Clearing conditions]

- Writing 0 to POE8F after reading POE8F = 1
  When writing 0 to the flag while low-level sampling is selected for the ICSR2.POE8M[1:0] bits, the POE8# pin input must be at the high level.
  For details, refer to section 23.3.6, Release from the High-Impedance.

23.2.4 Software Port Output Enable Register (SPOER)

Address(es): 0008 890Ah

	b7	b6	b5	b4	b3	b2	b1	b0
	—	—	—	—	—	—	CH0HIZ	CH34HIZ
Value after reset:	0	0	0	0	0	0	0	0

Bit	Symbol	Bit Name	Description	R/W
b0	CH34HIZ	MTU3 and MTU4 Output High-Impedance Enable	0: Does not place the pins in high-impedance. 1: Places the pins in high-impedance.	R/W
b1	CH0HIZ	MTU0 Output High-Impedance Enable	0: Does not place the pins in high-impedance. 1: Places the pins in high-impedance.	R/W
b7 to b2	—	Reserved	These bits are read as 0. The write value should be 0.	R/W

CH34HIZ Bit (MTU3 and MTU4 Output High-Impedance Enable)

This bit selects whether to place the MTU complementary PWM output pins (MTIOC3B, MTIOC3D, MTIOC4A, MTIOC4B, MTIOC4C, MTIOC4D) in high-impedance.

[Setting conditions]

- By writing 1 to CH34HIZ
- An event signal from the event link controller (ELC) is received.

[Clearing condition]

- By writing 0 to CH34HIZ after reading CH34HIZ = 1

CH0HIZ Bit (MTU0 Output High-Impedance Enable)

This bit selects whether to place the MTU0 pins (MTIOC0A, MTIOC0B, MTIOC0C, MTIOC0D) in high-impedance.

[Setting conditions]

- By writing 1 to CH0HIZ
- An event signal from the event link controller (ELC) is received.

[Clearing condition]

- By writing 0 to CH0HIZ after reading CH0HIZ = 1

23.2.5 Port Output Enable Control Register 1 (POECR1)

Address(es): 0008 890Bh

	b7	b6	b5	b4	b3	b2	b1	b0
	—	—	—	—	PE3ZE	PE2ZE	PE1ZE	PE0ZE
Value after reset:	0	0	0	0	0	0	0	0

Bit	Symbol	Bit Name	Description	R/W
b0	PE0ZE	MTIOC0A High-Impedance Enable	0: Does not place the pin in high-impedance. 1: Places the pin in high-impedance.	R/W*1
b1	PE1ZE	MTIOC0B High-Impedance Enable	0: Does not place the pin in high-impedance. 1: Places the pin in high-impedance.	R/W*1
b2	PE2ZE	MTIOC0C High-Impedance Enable	0: Does not place the pin in high-impedance. 1: Places the pin in high-impedance.	R/W*1
b3	PE3ZE	MTIOC0D High-Impedance Enable	0: Does not place the pin in high-impedance. 1: Places the pin in high-impedance.	R/W*1
b7 to b4	—	Reserved	These bits are read as 0. The write value should be 0.	R/W

Note 1. Can be modified only once after a reset.

23.2.6 Port Output Enable Control Register 2 (POECR2)

Address(es): 0008 890Ch

	b7	b6	b5	b4	b3	b2	b1	b0
	—	P1CZEA	P2CZEA	P3CZEA	—	—	—	—
Value after reset:	0	1	1	1	0	0	0	0

Bit	Symbol	Bit Name	Description	R/W
b3 to b0	—	Reserved	These bits are read as 0. The write value should be 0.	R/W
b4	P3CZEA	MTU Port 3 High-Impedance Enable	0: Comparison of output levels does not proceed and the pins are not placed in the high-impedance. 1: The pins are placed in the high-impedance.	R/W*1
b5	P2CZEA	MTU Port 2 High-Impedance Enable	0: Comparison of output levels does not proceed and the pins are not placed in the high-impedance. 1: The pins are placed in the high-impedance.	R/W*1
b6	P1CZEA	MTU Port 1 High-Impedance Enable	0: Comparison of output levels does not proceed and the pins are not placed in the high-impedance. 1: The pins are placed in the high-impedance.	R/W*1
b7	—	Reserved	This bit is read as 0. The write value should be 0.	R/W

Note 1. Can be modified only once after a reset.

When this function is not used, write 00h to this register.

P3CZEA Bit (MTU Port 3 High-Impedance Enable)

This bit gives permission regarding whether or not the MTIOC4B and MTIOC4D pins for complementary PWM output from the MTU are placed in the high-impedance. It also gives permission regarding whether or not the levels on the MTIOC4B and MTIOC4D pins are compared.

P2CZEA Bit (MTU Port 2 High-Impedance Enable)

This bit gives permission regarding whether or not the MTIOC4A and MTIOC4C pins for complementary PWM output from the MTU are placed in the high-impedance. It also gives permission regarding whether or not the levels on the MTIOC4A and MTIOC4C pins are compared.

P1CZEA Bit (MTU Port 1 High-Impedance Enable)

This bit gives permission regarding whether or not the MTIOC3B and MTIOC3D pins for complementary PWM output from the MTU are placed in the high-impedance. It also gives permission regarding whether or not the levels on the MTIOC3B and MTIOC3D pins are compared.

23.2.7 Input Level Control/Status Register 3 (ICSR3)

Address(es): 0008 890Eh

	b15	b14	b13	b12	b11	b10	b9	b8	b7	b6	b5	b4	b3	b2	b1	b0
	—	—	—	OSTSTF	—	—	OSTSTE	—	—	—	—	—	—	—	—	—
Value after reset:	0	0	0	0	0	0	0	0	0	0	0	0	0	0	0	0

Bit	Symbol	Bit Name	Description	R/W
b8 to b0	—	Reserved	These bits are read as 0. The write value should be 0.	R/W
b9	OSTSTE	OSTST High-Impedance Enable	0: Does not place the MTIOC0A, MTIOC0B, MTIOC0C, MTIOC0D, MTIOC3B, MTIOC3D, MTIOC4A, MTIOC4B, MTIOC4C, and MTIOC4D pins in high-impedance. 1: Places the MTIOC0A, MTIOC0B, MTIOC0C, MTIOC0D, MTIOC3B, MTIOC3D, MTIOC4A, MTIOC4B, MTIOC4C, and MTIOC4D pins in high-impedance.	R/W*1
b11, b10	—	Reserved	These bits are read as 0. The write value should be 0.	R/W
b12	OSTSTF	OSTST High-Impedance Flag	0: Oscillation stop is not producing a request to place pins in the high-impedance. 1: Oscillation stop is producing a request to place pins in the high-impedance.	R/(W)*2
b15 to b13	—	Reserved	These bits are read as 0. The write value should be 0.	R/W

Note 1. Can be modified only once after a reset.
Note 2. Writing 0 to this bit after reading it as 1 clears the flag and is the only allowed way.

OSTSTE Bit (OSTST High-Impedance Enable)

This bit permits or prohibits placement of pins for complementary PWM output from MTU and output pins for MTU0 in the high-impedance on detection that oscillation has stopped.

OSTSTF Flag (OSTST High-Impedance Flag)

The OSTSTF flag is a status flag that indicates the state of requests to place pins in the high-impedance due to oscillation having stopped. The value of the flag becomes 1 when oscillation stops. Ensure that the oscillation-stopped detection signal is negated when clearing the flag by writing 0 to it. Writing 0 to the OSTSTF flag will not clear the flag while the oscillation-stopped detection signal is being asserted; in other words, it will not clear the flag before 10 PCLK clock cycles have elapsed after stopped oscillation was detected.

[Setting condition]

- Detection of the oscillation-stopped state

[Clearing condition]

- Writing 0 to the bit after having read its value as 1.

23.3 Operation

The target pins for high-impedance control and conditions to place the pins in high-impedance are described below.

(1) MTU0 pin (MTIOC0A)

When any of the following conditions is satisfied, the pin is placed to the high-impedance state.

- POE8# input level detection
  When the ICSR2.POE8F flag is set to 1 with POECR1.PE0ZE and ICSR2.POE8E set to 1.
- SPOER setting
  When the SPOER.CH0HIZ bit is set to 1 with POECR1.PE0ZE set to 1.
- Detection of stopped oscillation
  When the OSTSTF flag is set to 1 with POECR1.PE0ZE and ICSR3.OSTSTE set to 1.
- Event signal reception from the ELC

(2) MTU0 pin (MTIOC0B)

When any of the following conditions is satisfied, the pin is placed to the high-impedance state.

- POE8# input level detection
  When the ICSR2.POE8F flag is set to 1 with POECR1.PE1ZE and ICSR2.POE8E set to 1.
- SPOER setting
  When the SPOER.CH0HIZ bit is set to 1 with POECR1.PE1ZE set to 1.
- Detection of stopped oscillation
  When the OSTSTF flag is set to 1 with POECR1.PE1ZE and ICSR3.OSTSTE set to 1.
- Event signal reception from the ELC

(3) MTU0 pin (MTIOC0C)

When any of the following conditions is satisfied, the pin is placed to the high-impedance state.

- POE8# input level detection
  When the ICSR2.POE8F flag is set to 1 with POECR1.PE2ZE and ICSR2.POE8E set to 1.
- SPOER setting
  When the SPOER.CH0HIZ bit is set to 1 with POECR1.PE2ZE set to 1.
- Detection of stopped oscillation
  When the OSTSTF flag is set to 1 with POECR1.PE2ZE and ICSR3.OSTSTE set to 1.
- Event signal reception from the ELC

(4) MTU0 pin (MTIOC0D)

When any of the following conditions is satisfied, the pin is placed to the high-impedance state.

- POE8# input level detection
  When the ICSR2.POE8F flag is set to 1 with POECR1.PE3ZE and ICSR2.POE8E set to 1.
- SPOER setting
  When the SPOER.CH0HIZ bit is set to 1 with POECR1.PE3ZE set to 1.
- Detection of stopped oscillation
  When the OSTSTF flag is set to 1 with POECR1.PE3ZE and ICSR3.OSTSTE set to 1.
- Event signal reception from the ELC

(5) MTU3 pins (MTIOC3B and MTIOC3D)

When any of the following conditions is satisfied, the pins are placed to the high-impedance state.

- POE0# to POE3# input level detection
  When the ICSR1.POE3F, POE2F, POE1F, or POE0F flag is set to 1 with POECR2.P1CZEA set to 1.
- MTIOC3B and MTIOC3D output level comparison
  When the OCSR1.OSF1 flag is set to 1 with POECR2.P1CZEA and OCSR1.OCE1 set to 1.
- SPOER setting
  When the SPOER.CH34HIZ bit is set to 1 with POECR2.P1CZEA set to 1.
- Detection of stopped oscillation
  When the ICSR3.OSTSTF flag is set to 1 with POECR2.P1CZEA and ICSR3.OSTSTE set to 1.
- Event signal reception from the ELC

(6) MTU4 pins (MTIOC4A and MTIOC4C)

When any of the following conditions is satisfied, the pins are placed to the high-impedance state.

- POE0# to POE3# input level detection
  When the ICSR1.POE3F, POE2F, POE1F, or POE0F flag is set to 1 with POECR2.P2CZEA set to 1.
- MTIOC4A and MTIOC4C output level comparison
  When the OCSR1.OSF1 flag is set to 1 with POECR2.P2CZEA and OCSR1.OCE1 set to 1.
- SPOER setting
  When the SPOER.CH34HIZ bit is set to 1 with POECR2.P2CZEA set to 1.
- Detection of stopped oscillation
  When the ICSR3.OSTSTF flag is set to 1 with POECR2.P2CZEA and ICSR3.OSTSTE set to 1.
- Event signal reception from the ELC

(7) MTU4 pins (MTIOC4B and MTIOC4D)

When any of the following conditions is satisfied, the pins are placed to the high-impedance state.

- POE0# to POE3# input level detection
  When the ICSR1.POE3F, POE2F, POE1F, or POE0F flag is set to 1 with POECR2.P3CZEA set to 1.
- MTIOC4B and MTIOC4D output level comparison
  When the OCSR1.OSF1 flag is set to 1 with POECR2.P3CZEA and OCSR1.OCE1 set to 1.
- SPOER setting
  When the SPOER.CH34HIZ bit is set to 1 with POECR2.P3CZEA set to 1.
- Detection of stopped oscillation
  When the ICSR3.OSTSTF flag is set to 1 with POECR2.P3CZEA and ICSR3.OSTSTE set to 1.
- Event signal reception from the ELC

23.3.1 Input Level Detection Operation

If the input conditions set by the ICSR1 and ICSR2 registers occur on the POE0# to POE3# and POE8# pins, the pins for the MTU complementary PWM output and MTU0 are placed in high-impedance.

(1) Falling Edge Detection

When a change from a high to low level is input to the POE0# to POE3# and POE8# pins, the pins for the MTU complementary PWM output and MTU0 are placed in high-impedance.
A falling edge is detected after PCLK causes sampling to proceed. If the low level is input to the POE0# to POE3# or POE8# pin over less than one PCLK cycle, whether the falling edge will or will not be detected cannot be guaranteed.
Figure 23.2 shows the timing of sampling after the level changes in input to the POE0# to POE3# and POE8# pins until the respective pins enter high-impedance.

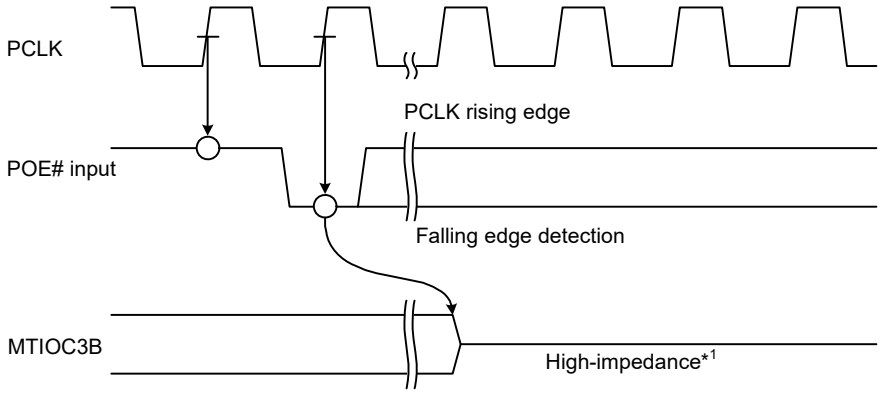

Note 1. The other MTU complementary PWM output pins and MTU0 pins also enter the high-impedance in the similar timing.

Figure 23.2 Falling Edge Detection

(2) Low-Level Detection

Figure 23.3 shows the low-level detection operation. When a low level is detected 16 times continuously with the sampling clock selected by the ICSR1 and ICSR2 registers, the detected level is recognized as low, and the pins for the MTU complementary PWM output and MTU0 are placed in high-impedance. If even one high level is detected during this interval, the detected level is not recognized as low. Furthermore, in an interval over which the sampling clock is not being output, changes to the levels on the POE0# to POE3# and POE8# pins are ignored.

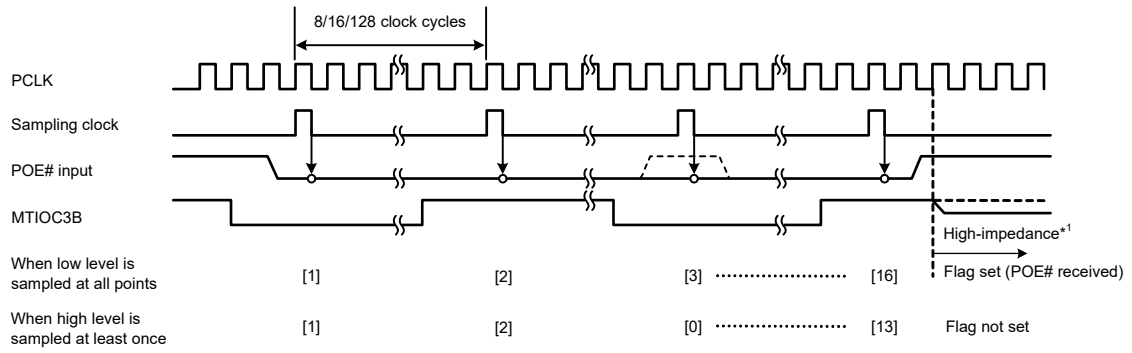

Note 1. The other MTU complementary PWM output pins and MTU0 pins also enter the high-impedance in the similar timing.

Figure 23.3 Low-Level Detection Operation

23.3.2 Output-Level Compare Operation

Figure 23.4 shows an example of the output-level compare operation for the combination of MTIOC3B and MTIOC3D (MTU complementary PWM output pins). The operation is the same for the other pin combinations.

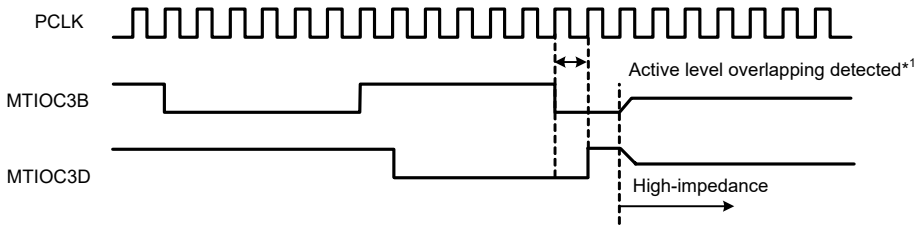

Note 1. In this case, the low level has been set as the active level for the MTIOC3B and MTIOC3D pins.

Figure 23.4 Output-Level Compare Operation

23.3.3 High-Impedance Control Using Registers

The high-impedance of the MTU complementary PWM output and MTU0 pins can be directly controlled by writing to the software port output enable register (SPOER).
Setting the SPOER.CH34HIZ bit to 1 places the MTU complementary PWM output pins (MTU3 and MTU4) specified by the POECR2 register in the high-impedance.
Setting the SPOER.CH0HIZ bit to 1 places the MTU0 output pins specified by port output enable control register 1 (POECR1) in the high-impedance.

23.3.4 High-Impedance Control on Detection of Stopped Oscillation

When the oscillation stop detection function in the clock generation circuit detects stopped oscillation while the ICSR3.OSTSTE bit is 1, the MTU complementary PWM output pins specified by the POECR2 register and the MTU0 output pins specified by the POECR1 register are placed in the high-impedance.

23.3.5 High-Impedance Control in Response to Receiving an Event Signal from the ELC

The MTU complementary PWM output and MTU0 pins can be placed in the high-impedance state in response to an event signal from the ELC.
To control the high-impedance state of the MTU complementary PWM output and MTU0 pins, preset the corresponding register (POECR1 or POECR2) to enable the high-impedance state. When an event signal is received from the ELC, the corresponding bit (SPOER.CH0HIZ or SPOER.CH34HIZ) is set to 1, and the MTU complementary PWM output pins or MTU0 pins are placed in the high-impedance state.

23.3.6 Release from the High-Impedance

Pins for complementary PWM output from MTU and pins for MTU0 which have been placed in the high-impedance due to input-level detection can be released from that state by either returning them to their initial state with a reset or clearing all of the ICSR1.POE3F to POE0F flags and the ICSR2.POE8F flag. Note, however, that when low-level sampling is selected by the ICSR1.POE3M[1:0], POE2M[1:0], POE1M[1:0], and POE0M[1:0] bits, and the ICSR2.POE8M[1:0] bits, if a high level is being input to the corresponding pin from among POE0# to POE3# and POE#8 but has not yet been detected, writing 0 to the flag is ignored (the flag is not cleared).
MTU complementary PWM output pins which have been placed in the high-impedance due to output-level comparison can be released from that state by either returning them to their initial state with a reset or clearing the OCSR1.OSF1 flag. Note, however, that if the inactive level is not yet being output from the MTU complementary PWM output pins, writing 0 to the flag is ignored (the flag is not cleared). Inactive-level outputs can be obtained by setting the MTU registers.
For MTU complementary PWM output pins and pins for MTU0 that have been placed in the high-impedance because oscillation by the clock generation circuit has stopped, clearing the ICSR3.OSTSTF or ICSR3.OSTSTE bit releases the pins from the high-impedance.
For MTU complementary PWM output pins and pins for MTU0 that have been placed in the high-impedance by the SPOER.CH34HIZ or SPOER.CH0HIZ bit, clearing the corresponding bits (SPOER.CH34HIZ and SPOER.CH0HIZ) releases the pins from the high-impedance.

23.4 Interrupts

The POE issues a request to generate an interrupt when the corresponding condition below is matched during input-level detection, output-level comparison, or oscillation stop by the clock generation circuit. Table 23.4 lists the interrupt sources and their request conditions. On acceptance of an OEI1 or OEI2 interrupt, the first line of the exception handling routine for the given interrupt should confirm that the flag for the given flag has been set to 1.

Table 23.4 Interrupt Sources and Conditions

Name	Interrupt Source	Interrupt Flag	Condition
OEI1	Output enable interrupt 1	POE0F, POE1F, POE2F, POE3F, OSF1	When ICSR1.POE0F, POE1F, POE2F, or POE3F flag is set to 1 with ICSR1.PIE1 set to 1, or when OCSR1.OSF1 flag is set to 1 with OCSR1.OIE1 set to 1.
OEI2	Output enable interrupt 2	POE8F	When ICSR2.POE8F flag is set to 1 with ICSR2.PIE2 set to 1.

23.5 Usage Notes

23.5.1 Transitions to Software Standby Mode

When the POE is used, do not make a transition to software standby mode. In this mode, the POE stops and thus the high-impedance of pins cannot be controlled.

23.5.2 When the POE Is Not Used

When the POE is not used, write 00h to port output enable control registers 1 and 2 (POECR1 and POECR2), respectively.

23.5.3 Specifying Pins Corresponding to the MTU

The POE controls high-impedance outputs only when a pin has been specified so that the pin corresponds to the MTU by setting the PMR and PmnPFS registers. When the pin has been specified as a general I/O pin, the POE does not control high-impedance outputs.

23.5.4 Notes on High-Impedance Control by Event Signal Reception from the ELC

When writing 0 to the SPOER.CH34HIZ or SPOER.CH0HIZ bit and receiving an event signal conflict, the event signal takes priority and the corresponding bit is set to 1. If the MTU complementary PWM output and MTU0 pins are placed in the high-impedance state when an event signal is received from the ELC, no interrupt request is generated.

24. 8-Bit Timer (TMRa)

This MCU has two units (unit 0, unit 1) of an on-chip 8-bit timer (TMR) module that comprise two 8-bit counter channels, totaling four channels. The 8-bit timer module can be used to count external events and also be used as a multi-function timer in a variety of applications, such as generation of counter reset signal, interrupt requests, and pulse output with a desired duty cycle using a compare-match signal with two registers.
Unit 0 and unit 1 have the same functions, and can generate a base clock for the SCI.
In this section, “PCLK” is used to refer to PCLKB.

24.1 Overview

Table 24.1 lists the specifications of the TMR. Table 24.2 lists the TMR functions.
Figure 24.1 shows a block diagram of the 8-bit timer module (unit 0), and Figure 24.2 shows that of the 8-bit timer module (unit 1).

Table 24.1 Specifications of TMR

Item	Description
Count clock	• Internal clock: PCLK/1, PCLK/2, PCLK/8, PCLK/32, PCLK/64, PCLK/1024, PCLK/8192 • External clock: external count clock
Number of channels	(8 bits × 2 channels) × 2 units
Compare match	• 8-bit mode (compare match A, compare match B) • 16-bit mode (compare match A, compare match B)
Counter clear	Selected by compare match A or B, or an external counter reset signal.
Timer output	Output pulses with a desired duty cycle or PWM output
Cascading of two channels	• 16-bit count mode 16-bit timer using TMR0 for the upper 8 bits and TMR1 for the lower 8 bits (TMR2 for the upper 8 bits and TMR3 for the lower 8 bits) • Compare match count mode TMR1 can be used to count TMR0 compare matches (TMR3 can be used to count TMR2 compare matches).
Interrupt sources	Compare match A, compare match B, and overflow
Event link function (Output)	Compare match A, compare match B, and overflow (TMR0, TMR2)
Event link function (Input)	One of the following three operations proceeds in response to an event reception: (1) Counting start operation (TMR0, TMR2) (2) Event counting operation (TMR0, TMR2) (3) Counting restart operation (TMR0, TMR2)
DTC activation	DTC can be activated by compare match A interrupts or compare match B interrupts.
Capable of generating base clock for SCI	Generates base clock for SCI.*1
Low power consumption function	Each unit can be placed in a module stop state

Note 1. For details, refer to section 28, Serial Communications Interface (SCIg, SCIh).

Table 24.2 TMR Functions

Item		Unit 0			Unit 1		
Counter mode		**8 Bits**		**16 Bits**	**8 Bits**		**16 Bits**
Channel		**TMR0**	**TMR1**	**TMR0 + TMR1**	**TMR2**	**TMR3**	**TMR2 + TMR3**
Count clock		PCLK/1 PCLK/2 PCLK/8 PCLK/32 PCLK/64 PCLK/1024 PCLK/8192 TMCI0	PCLK/1 PCLK/2 PCLK/8 PCLK/32 PCLK/64 PCLK/1024 PCLK/8192 TMCI1	PCLK/1 PCLK/2 PCLK/8 PCLK/32 PCLK/64 PCLK/1024 PCLK/8192 TMCI1	PCLK/1 PCLK/2 PCLK/8 PCLK/32 PCLK/64 PCLK/1024 PCLK/8192 TMCI2	PCLK/1 PCLK/2 PCLK/8 PCLK/32 PCLK/64 PCLK/1024 PCLK/8192 TMCI3	PCLK/1 PCLK/2 PCLK/8 PCLK/32 PCLK/64 PCLK/1024 PCLK/8192 TMCI3
Counter clear		TMR0.TCORA TMR0.TCORB TMRI0	TMR1.TCORA TMR1.TCORB TMRI1	TMR0.TCORA + TMR1.TCORA TMR0.TCORB + TMR1.TCORB TMRI0	TMR2.TCORA TMR2.TCORB TMRI2	TMR3.TCORA TMR3.TCORB TMRI3	TMR2.TCORA + TMR3.TCORA TMR2.TCORB + TMR3.TCORB TMRI2
Compare match	Compare match A	✓	✓	✓	✓	✓	✓
	Compare match B	✓	✓	✓	✓	✓	✓
Timer output	Low output	✓	✓	✓	✓	✓	✓
	High output	✓	✓	✓	✓	✓	✓
	Toggle output	✓	✓	✓	✓	✓	✓
DTC activation	Compare match A	✓	✓	✓	✓	✓	✓
	Compare match B	✓	✓	✓	✓	✓	✓
	TCNT overflow	—	—	—	—	—	—
Interrupt	Compare match A	CMIA0	CMIA1	CMIA0	CMIA2	CMIA3	CMIA2
	Compare match B	CMIB0	CMIB1	CMIB0	CMIB2	CMIB3	CMIB2
	TCNT overflow	OVI0	OVI1	OVI0	OVI2	OVI3	OVI2
Cascaded connection		TMR1 overflow	TMR0 compare match A	—	TMR3 overflow	TMR2 compare match A	—
SCI base clock generation*1		✓		—	✓		—
ELC output event	Compare match A	✓	—	✓	✓	—	✓
	Compare match B	✓	—	✓	✓	—	✓
	TCNT overflow	✓	—	✓	✓	—	✓
ELC input event	Counting start	✓	—	—	✓	—	—
	Event counting	✓	—	—	✓	—	—
	Counting restart	✓	—	—	✓	—	—
Module stop setting*2		MSTPCRA.MSTPA5 bit (unit 0), MSTPCRA.MSTPA4 bit (unit 1)					

✓: Possible

—: Impossible

Note 1. For details, refer to section 28, Serial Communications Interface (SCIg, SCIh).

Note 2. For details, refer to section 11, Low Power Consumption.

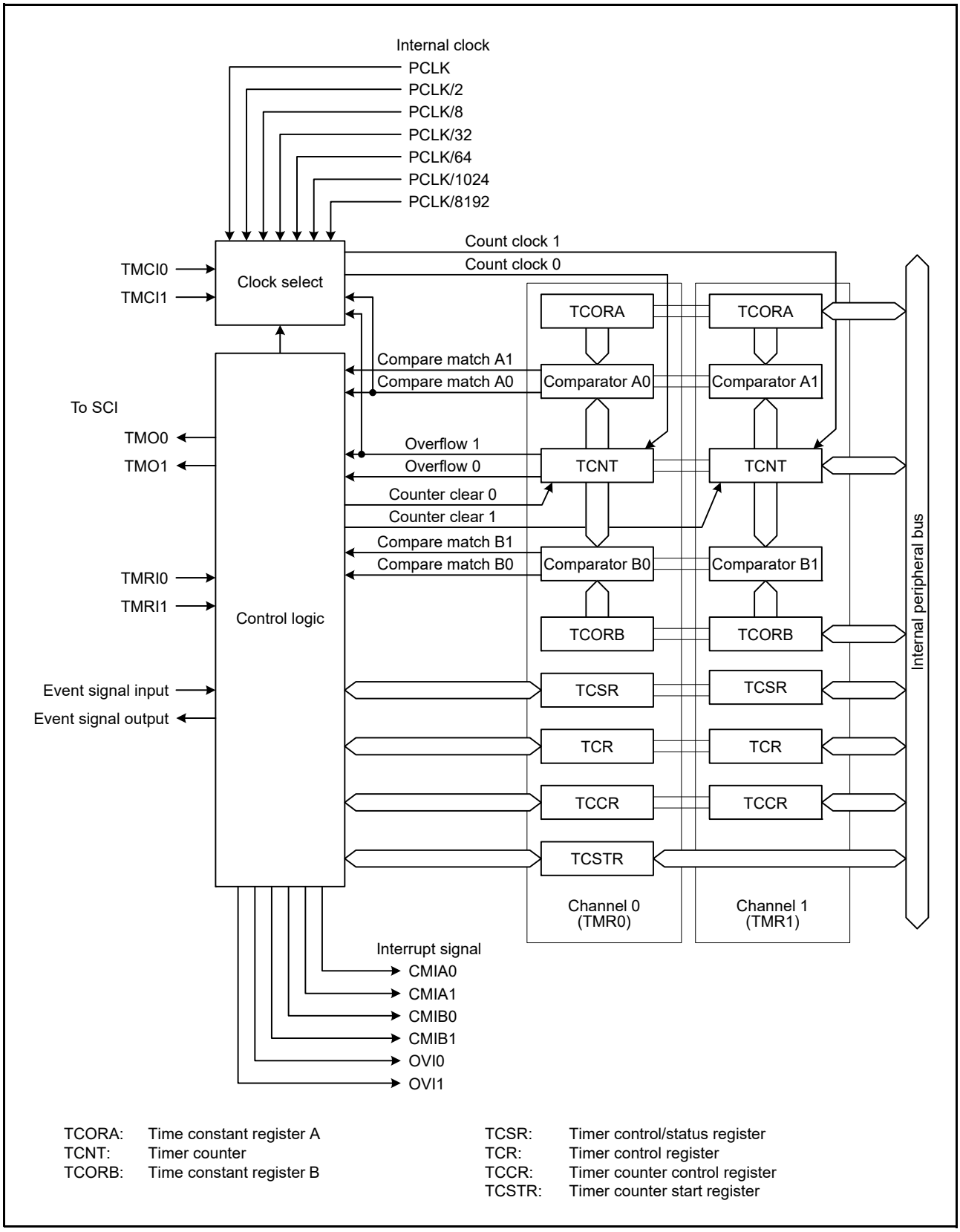

Figure 24.1 Block Diagram of TMR (Unit 0)

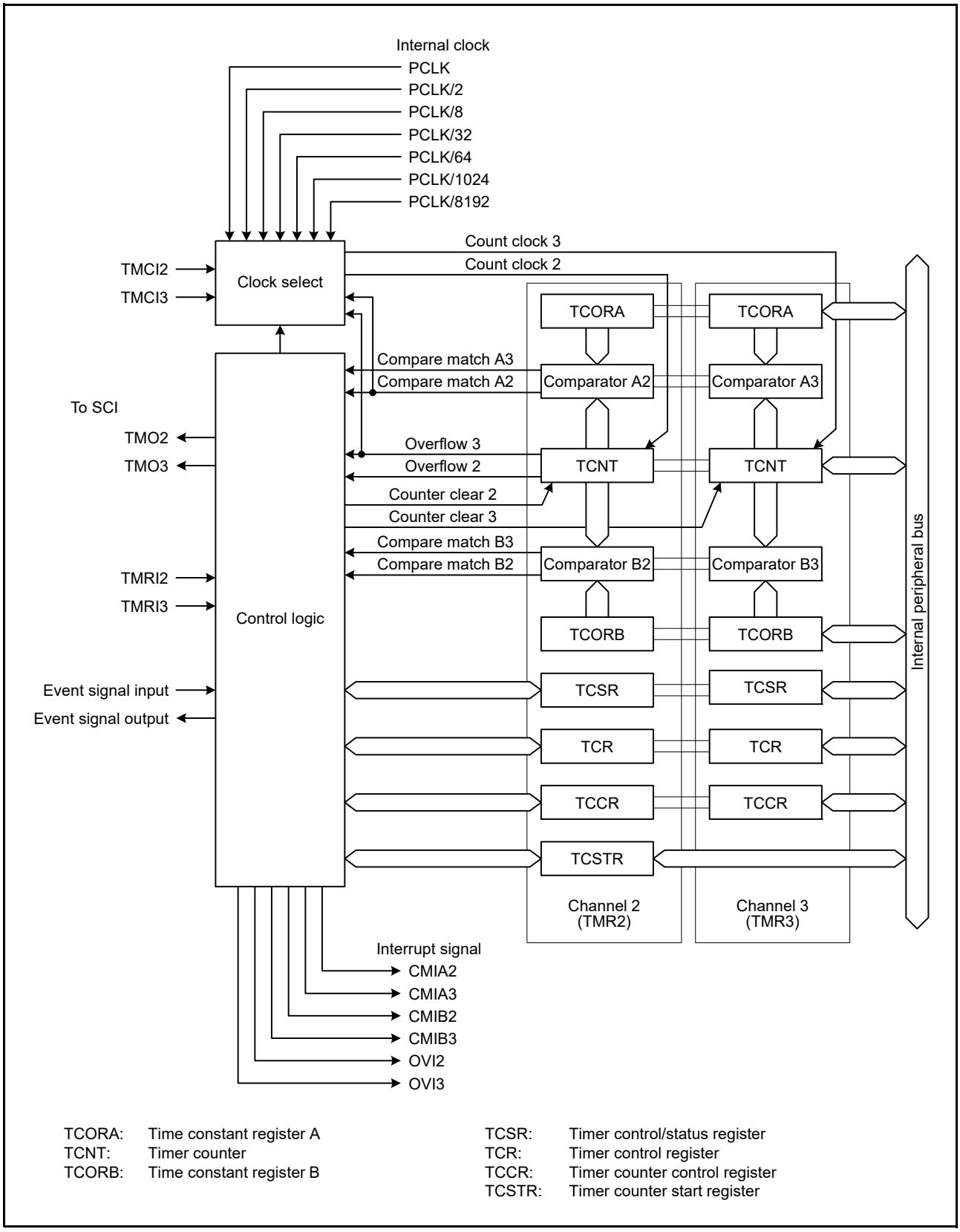

Figure 24.2 Block Diagram of TMR (Unit 1)

Table 24.3 lists the I/O pins of the TMR.

Table 24.3 Pin Configuration of TMR

Unit	Channel	Pin Name	I/O	Description
0	TMR0	TMO0	Output	Outputs compare match
		TMCI0	Input	Inputs external count clock
		TMRI0	Input	Inputs external counter reset
	TMR1	TMO1	Output	Outputs compare match
		TMCI1	Input	Inputs external count clock
		TMRI1	Input	Inputs external counter reset
1	TMR2	TMO2	Output	Outputs compare match
		TMCI2	Input	Inputs external count clock
		TMRI2	Input	Inputs external counter reset
	TMR3	TMO3	Output	Outputs compare match
		TMCI3	Input	Inputs external count clock
		TMRI3	Input	Inputs external counter reset

24.2 Register Descriptions

Table 24.4 Register Allocation for 16-Bit Access

Address	Register	Upper 8 Bits	Lower 8 Bits
0008 8208h	TMR01.TCNT	TMR0.TCNT	TMR1.TCNT
0008 8204h	TMR01.TCORA	TMR0.TCORA	TMR1.TCORA
0008 8206h	TMR01.TCORB	TMR0.TCORB	TMR1.TCORB
0008 820Ah	TMR01.TCCR	TMR0.TCCR	TMR1.TCCR
0008 8218h	TMR23.TCNT	TMR2.TCNT	TMR3.TCNT
0008 8214h	TMR23.TCORA	TMR2.TCORA	TMR3.TCORA
0008 8216h	TMR23.TCORB	TMR2.TCORB	TMR3.TCORB
0008 821Ah	TMR23.TCCR	TMR2.TCCR	TMR3.TCCR

24.2.1 Timer Counter (TCNT)

Address(es): TMR0.TCNT 0008 8208h, TMR1.TCNT 0008 8209h, TMR2.TCNT 0008 8218h, TMR3.TCNT 0008 8219h, TMR01.TCNT 0008 8208h, TMR23.TCNT 0008 8218h

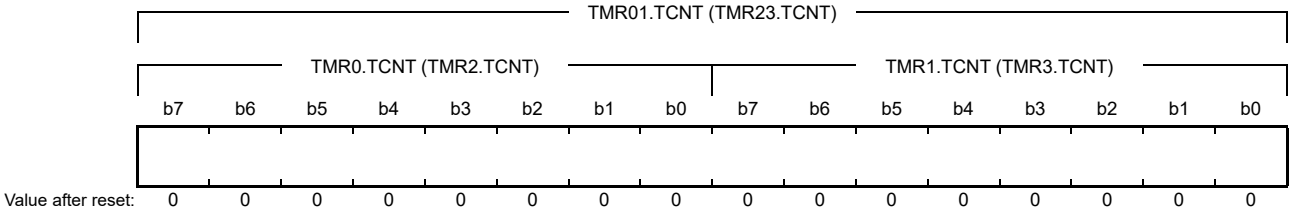

TCNT is an 8-bit readable/writable up-counter.
TMR0.TCNT and TMR1.TCNT (TMR2.TCNT and TMR3.TCNT) comprise a single 16-bit counter (TMR01.TCNT, TMR23.TCNT) so they can be accessed together in 16-bit units.
The TCCR.CSS[1:0] and CKS[2:0] bits are used to select a count clock.
TCNT can be cleared by an external counter reset signal, compare match A, or compare match B. Which compare match to be used for clearing is selected by the TCR.CCLR[1:0] bits.
When TCNT overflows (its value changes from FFh to 00h), an overflow interrupt is output provided the interrupt request is enabled by the TCR.OVIE bit.
For details on the corresponding interrupt vector number, refer to section 14, Interrupt Controller (ICUb), and Table 24.6, TMR Interrupt Sources.

24.2.2 Time Constant Register A (TCORA)

Address(es): TMR0.TCORA 0008 8204h, TMR1.TCORA 0008 8205h, TMR2.TCORA 0008 8214h, TMR3.TCORA 0008 8215h, TMR01.TCORA 0008 8204h, TMR23.TCORA 0008 8214h

	TMR01.TCORA (TMR23.TCORA)															
	TMR0.TCORA (TMR2.TCORA)								TMR1.TCORA (TMR3.TCORA)							
	b7	b6	b5	b4	b3	b2	b1	b0	b7	b6	b5	b4	b3	b2	b1	b0
Value after reset:	1	1	1	1	1	1	1	1	1	1	1	1	1	1	1	1

TCORA is an 8-bit readable/writable register.
TMR0.TCORA and TMR1.TCORA (TMR2.TCORA and TMR3.TCORA) comprise a single 16-bit register (TMR01.TCORA, TMR23.TCORA) so they can be accessed together in 16-bit units.
The value in TCORA is continually compared with the value in TCNT. When a match is detected, the corresponding compare match A is generated, and a compare match A interrupt is output provided the interrupt request is enabled by the TCR.CMIEA bit.
However, comparison is not performed during writing to TCORA. The timer output from the TMOn pin can be freely controlled by this compare match A and the settings of the TCSR.OSA[1:0] bits.

24.2.3 Time Constant Register B (TCORB)

Address(es): TMR0.TCORB 0008 8206h, TMR1.TCORB 0008 8207h, TMR2.TCORB 0008 8216h, TMR3.TCORB 0008 8217h, TMR01.TCORB 0008 8206h, TMR23.TCORB 0008 8216h

	TMR01.TCORB (TMR23.TCORB)															
	TMR0.TCORB (TMR2.TCORB)								TMR1.TCORB (TMR3.TCORB)							
	b7	b6	b5	b4	b3	b2	b1	b0	b7	b6	b5	b4	b3	b2	b1	b0
Value after reset:	1	1	1	1	1	1	1	1	1	1	1	1	1	1	1	1

TCORB is an 8-bit readable/writable register.
TMR0.TCORB and TMR1.TCORB (TMR2.TCORB and TMR3.TCORB) comprise a single 16-bit register (TMR01.TCORB, TMR23.TCORB) so they can be accessed together in 16-bit units.
The value in TCORB is continually compared with the value in TCNT. When a match is detected, the corresponding compare match B is generated, and a compare match B interrupt is output provided the interrupt request is enabled by the TCR.CMIEB bit.
However, comparison is not performed during writing to TCORB. The timer output from the TMOn pin can be freely controlled by this compare match B and the settings of the TCSR.OSB[1:0] bits.

24.2.4 Timer Control Register (TCR)

Address(es): TMR0.TCR 0008 8200h, TMR1.TCR 0008 8201h, TMR2.TCR 0008 8210h, TMR3.TCR 0008 8211h

	b7	b6	b5	b4	b3	b2	b1	b0
	CMIEB	CMIEA	OVIE	CCLR[1:0]		—	—	—
Value after reset:	0	0	0	0	0	0	0	0

Bit	Symbol	Bit Name	Description	R/W
b2 to b0	—	Reserved	These bits are read as 0. The write value should be 0.	R/W
b4, b3	CCLR[1:0]	Counter Clear	b4 b3 0 0: Clearing is disabled 0 1: Cleared by compare match A 1 0: Cleared by compare match B 1 1: Cleared by the external counter reset signal*1 (Select edge or level by the TMRIS bit in TCCR.)	R/W
b5	OVIE	Overflow Interrupt Enable	0: Overflow interrupt requests (OVIn) are disabled 1: Overflow interrupt requests (OVIn) are enabled	R/W
b6	CMIEA	Compare Match A Interrupt Enable	0: Compare match A interrupt requests (CMIAn) are disabled 1: Compare match A interrupt requests (CMIAn) are enabled	R/W
b7	CMIEB	Compare Match B Interrupt Enable	0: Compare match B interrupt requests (CMIBn) are disabled 1: Compare match B interrupt requests (CMIBn) are enabled	R/W

Note 1. To use an external counter reset signal, set the corresponding pin function. For details, refer to section 20, I/O Ports and section 21, Multi-Function Pin Controller (MPC).

CCLR[1:0] Bits (Counter Clear)

Select the condition by which TCNT is cleared.

OVIE Bit (Overflow Interrupt Enable)

Selects whether overflow interrupt requests (OVIn) issued by TCNT are enabled or disabled.

CMIEA Bit (Compare Match A Interrupt Enable)

Selects whether compare match A interrupt requests (CMIAn) that are issued when the value of TCORA corresponds to that of TCNT are enabled or disabled.

CMIEB Bit (Compare Match B Interrupt Enable)

Selects whether compare match B interrupt requests (CMIBn) that are issued when the value of TCORB corresponds to that of TCNT are enabled or disabled.

24.2.5 Timer Counter Control Register (TCCR)

Address(es): TMR0.TCCR 0008 820Ah, TMR1.TCCR 0008 820Bh, TMR2.TCCR 0008 821Ah, TMR3.TCCR 0008 821Bh, TMR01.TCCR 0008 820Ah, TMR23.TCCR 0008 821Ah

	b7	b6	b5	b4	b3	b2	b1	b0
	TMRIS	—	—	CSS[1:0]		CKS[2:0]		
Value after reset:	0	0	0	0	0	0	0	0

Bit	Symbol	Bit Name	Description	R/W
b2 to b0	CKS[2:0]	Clock Select*1	See Table 24.5.	R/W
b4, b3	CSS[1:0]	Clock Source Select	See Table 24.5.	R/W
b6, b5	—	Reserved	These bits are read as 0. The write value should be 0.	R/W
b7	TMRIS	Timer Reset Detection Condition Select	0: Cleared at rising edge of the external counter reset signal 1: Cleared when the external counter reset signal is high	R/W

Note 1. To use an external count clock, set the corresponding pin function. For details, refer to section 20, I/O Ports and section 21, Multi-Function Pin Controller (MPC).

TCCR register is a 8-bit register used to configure the basic operation of the counter. Two TCCR registers can be accessed simultaneously by accessing the address of the even channel TCCR register in 16-bit units.

CKS[2:0] Bits (Clock Select)

CSS[1:0] Bits (Clock Source Select)

The CKS[2:0] and CSS[1:0] bits select a clock. For details, see Table 24.5.

TMRIS Bit (Timer Reset Detection Condition Select)

This bit is enabled when the TCR.CCLR[1:0] bits are 11b (cleared by external counter reset signal) and selects the condition for detecting counter reset (level or edge).

Table 24.5 Clock Input to TCNT and Count Condition

Channel	TCCR Register					Description
	CSS[1:0]		CKS[2:0]			
	b4	b3	b2	b1	b0	
TMR0 (TMR2)	0	0	—	0	0	Clock input prohibited
					1	Uses external count clock. Counts at rising edge*1.
				1	0	Uses external count clock. Counts at falling edge*1.
					1	Uses external count clock. Counts at both rising and falling edges*1.
	0	1	0	0	0	Uses internal clock. Counts at PCLK.
					1	Uses internal clock. Counts at PCLK/2.
				1	0	Uses internal clock. Counts at PCLK/8.
					1	Uses internal clock. Counts at PCLK/32.
			1	0	0	Uses internal clock. Counts at PCLK/64.
					1	Uses internal clock. Counts at PCLK/1024.
				1	0	Uses internal clock. Counts at PCLK/8192.
					1	Clock input prohibited
	1	0	—	—	—	Setting prohibited
	1	1	—	—	—	Counts at TMR1.TCNT (TMR3.TCNT) overflow signal*2.
TMR1 (TMR3)	0	0	—	0	0	Clock input prohibited
					1	Uses external count clock. Counts at rising edge*1.
				1	0	Uses external count clock. Counts at falling edge*1.
					1	Uses external count clock. Counts at both rising and falling edges*1.
	0	1	0	0	0	Uses internal clock. Counts at PCLK.
					1	Uses internal clock. Counts at PCLK/2.
				1	0	Uses internal clock. Counts at PCLK/8.
					1	Uses internal clock. Counts at PCLK/32.
			1	0	0	Uses internal clock. Counts at PCLK/64.
					1	Uses internal clock. Counts at PCLK/1024.
				1	0	Uses internal clock. Counts at PCLK/8192.
					1	Clock input prohibited
	1	0	—	—	—	Setting prohibited
	1	1	—	—	—	Counts at TMR0.TCNT (TMR2.TCNT) compare match A*2.

Note 1. To use an external count clock, set the corresponding pin function. For details, refer to section 20, I/O Ports and section 21, Multi-Function Pin Controller (MPC).

Note 2. If the clock input of TMR0 (TMR2) is the overflow signal of the TMR1.TCNT (TMR3.TCNT) counter and that of TMR1 (TMR3) is the compare match signal of the TMR0.TCNT (TMR2.TCNT) counter, no TCNT count clock is generated. Do not use this setting.

24.2.6 Timer Control/Status Register (TCSR)

- TMR0.TCSR, TMR2.TCSR

Address(es): TMR0.TCSR 0008 8202h, TMR2.TCSR 0008 8212h

	b7	b6	b5	b4	b3	b2	b1	b0
	—	—	—	—	OSB[1:0]		OSA[1:0]	
Value after reset:	x	x	x	0	0	0	0	0

x: Undefined

Bit	Symbol	Bit Name	Description	R/W
b1, b0	OSA[1:0]	Output Select A*1	b1 b0 0 0: No change 0 1: Low is output 1 0: High is output 1 1: Output is inverted (toggle output)	R/W
b3, b2	OSB[1:0]	Output Select B*1	b3 b2 0 0: No change 0 1: Low is output 1 0: High is output 1 1: Output is inverted (toggle output)	R/W
b4	—	Reserved	This bit is read as 0. The write value should be 0.	R/W
b7 to b5	—	Reserved	These bits are read as an undefined value. The write value should be 1.	R/W

Note 1. When all OSA[1:0] and OSB[1:0] bits are 0, the output enable signal corresponding to the TMOn pin is negated and a request for high-impedance output is issued to the I/O port. Timer output pin is driven low until the first compare-match occurs after a reset when at least one of the OSA[1:0] and OSB[1:0] bits is 1.

OSA[1:0] Bits (Output Select A)

These bits select a method of TMOn pin output when compare match A of TCORA and TCNT occurs.

OSB[1:0] Bits (Output Select B)

These bits select a method of TMOn pin output when compare match B of TCORB and TCNT occurs.

- TMR1.TCSR, TMR3.TCSR

Address(es): TMR1.TCSR 0008 8203h, TMR3.TCSR 0008 8213h

	b7	b6	b5	b4	b3	b2	b1	b0
	—	—	—	—	OSB[1:0]		OSA[1:0]	
Value after reset:	x	x	x	1	0	0	0	0

x: Undefined

Bit	Symbol	Bit Name	Description	R/W
b1, b0	OSA[1:0]	Output Select A*1	b1 b0 0 0: No change 0 1: Low is output 1 0: High is output 1 1: Output is inverted (toggle output)	R/W
b3, b2	OSB[1:0]	Output Select B*1	b3 b2 0 0: No change 0 1: Low is output 1 0: High is output 1 1: Output is inverted (toggle output)	R/W
b4	—	Reserved	This bit is read as 1. The write value should be 1.	R/W
b7 to b5	—	Reserved	These bits are read as an undefined value. The write value should be 1.	R/W

Note 1. When all OSA[1:0] and OSB[1:0] bits are 0, the output enable signal corresponding to the TMOn pin is negated and a request for high-impedance output is issued to the I/O port. Timer output pin is driven low until the first compare match occurs after a reset when at least one of the OSA[1:0] and OSB[1:0] bits is 1.

OSA[1:0] Bits (Output Select A)

These bits select a method of TMOn pin output when compare match A of TCORA and TCNT occurs.

OSB[1:0] Bits (Output Select B)

These bits select a method of TMOn pin output when compare match B of TCORB and TCNT occurs.

24.2.7 Timer Counter Start Register (TCSTR)

Address(es): TMR0.TCSTR 0008 820Ch, TMR2.TCSTR 0008 821Ch

	b7	b6	b5	b4	b3	b2	b1	b0
	—	—	—	—	—	—	—	TCS
Value after reset:	x	x	x	x	x	x	x	0

x: Undefined

Bit	Symbol	Bit Name	Description	R/W
b0	TCS	Timer Counter Status	0: Count stopped state in response to ELC. 1: Count start state in response to ELC.	R/W
b7 to b1	—	Reserved	These bits are read as an undefined value. The write value should be 0.	R/W

TCS Bit (Timer Counter Status)

The TCS bit is used to check the state of the timer count in response to ELC.
When this bit is read as 1, it shows the timer start state in response to ELC. When this bit is read as 0, it shows the timer stopped state in response to ELC.
This bit is cleared by writing 0. Do not write 1 to this bit.

The TCS bit is valid only when the count start operation is selected by the ELOPD register of the event controller (ELC). For details, refer to section 24.7, Link Operation by ELC, or section 19, Event Link Controller (ELC).

24.3 Operation

24.3.1 Pulse Output

Figure 24.3 shows an example of the 8-bit timer being used to generate a pulse output with a desired duty cycle.

1. Set the TCR.CCLR[1:0] bits to 01b (cleared by compare match A) so that TCNT is cleared at a compare match of TCORA.
2. Set the TCSR.OSA[1:0] bits to 10b (high is output) and TCSR.OSB[1:0] bits to 01b (low is output), causing the output to change to high at a compare match of TCORA and to low at a compare match of TCORB.

With these settings, the 8-bit timer provides pulses output at a cycle determined by TCORA with a pulse width determined by TCORB. No software intervention is required.
The timer output pin is low after the TCSR.OSA[1:0] or TCSR.OSB[1:0] bits are set until the first compare match occurs after a reset.

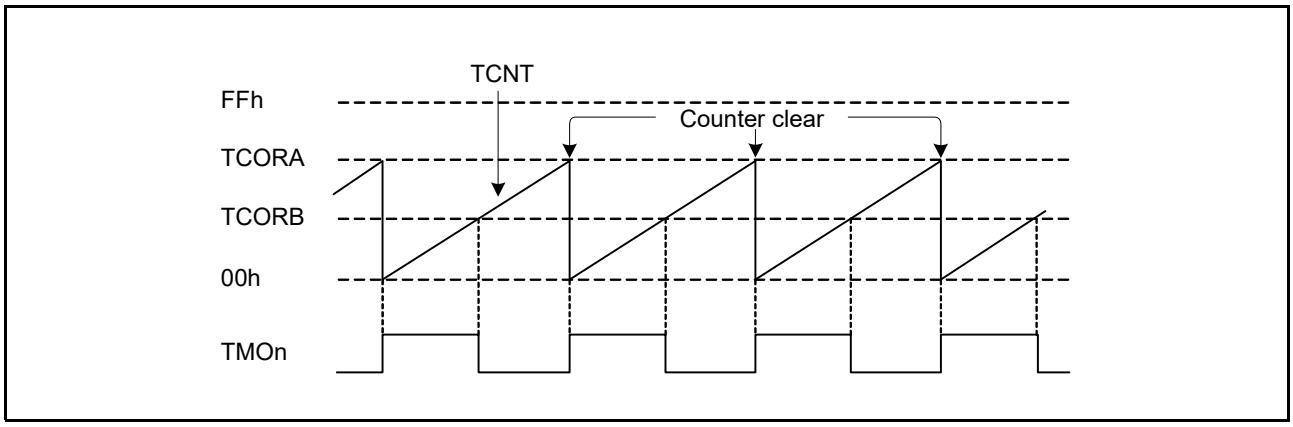

Figure 24.3 Example of Pulse Output (n = 0 to 3)

24.3.2 External Counter Reset Input

Figure 24.4 shows an example of the 8-bit timer being used to generate a pulse which is output after a desired delay time from a TMRIn input.

1. Set the TCR.CCLR[1:0] bits to 11b (cleared by external counter reset signal) and set the TMRIS bit in TCCR to 1 (cleared when the external counter reset signal is high) so that TCNT is cleared at the high level input of the TMRIn signal.
2. Set the TCSR.OSA[1:0] bits to 10b (high output) and the TCSR.OSB[1:0] bits to 01b (low output), causing the output to change to high at a compare match of TCORA and to low at a compare match of TCORB.

With these settings, the 8-bit timer provides pulses output at a desired delay time from a TMRIn input determined by TCORA and with a pulse width determined by TCORB and TCORA.

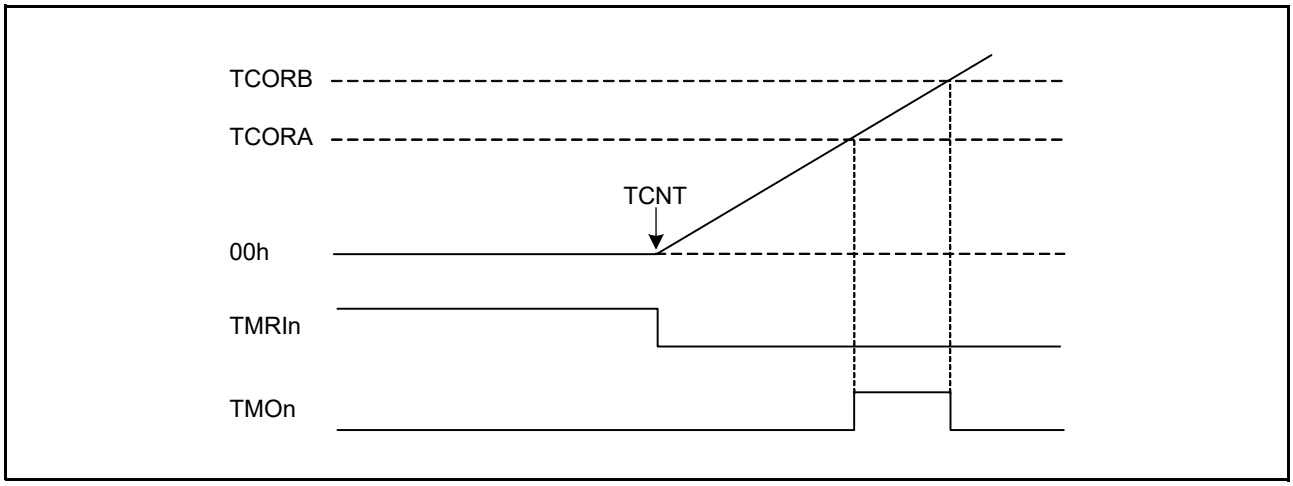

Figure 24.4 Example of External Counter Reset Signal Input (n = 0 to 3)

24.4 Operation Timing

24.4.1 TCNT Count Timing

Figure 24.5 shows the count timing of TCNT for internal clock. Figure 24.6 shows the count timing of TCNT for external clock.

Note that the external clock pulse width must be at least 1.5 PCLK cycles for increment at a single edge, and at least 2.5 PCLK cycles for increment at both edges. The counter will not increment correctly if the pulse width is less than these values.

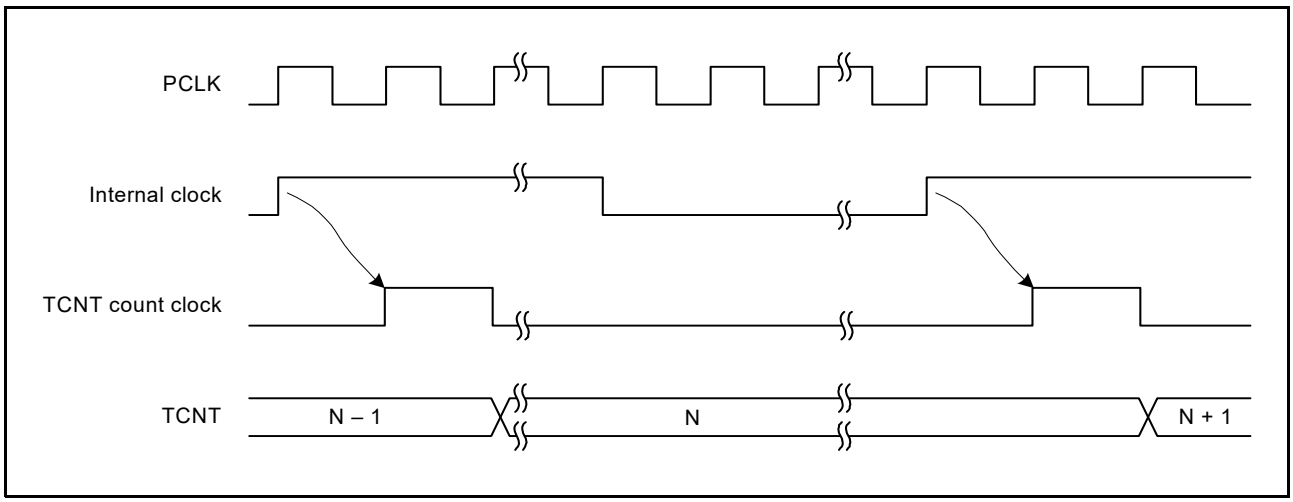

Figure 24.5 Count Timing for Internal Clock

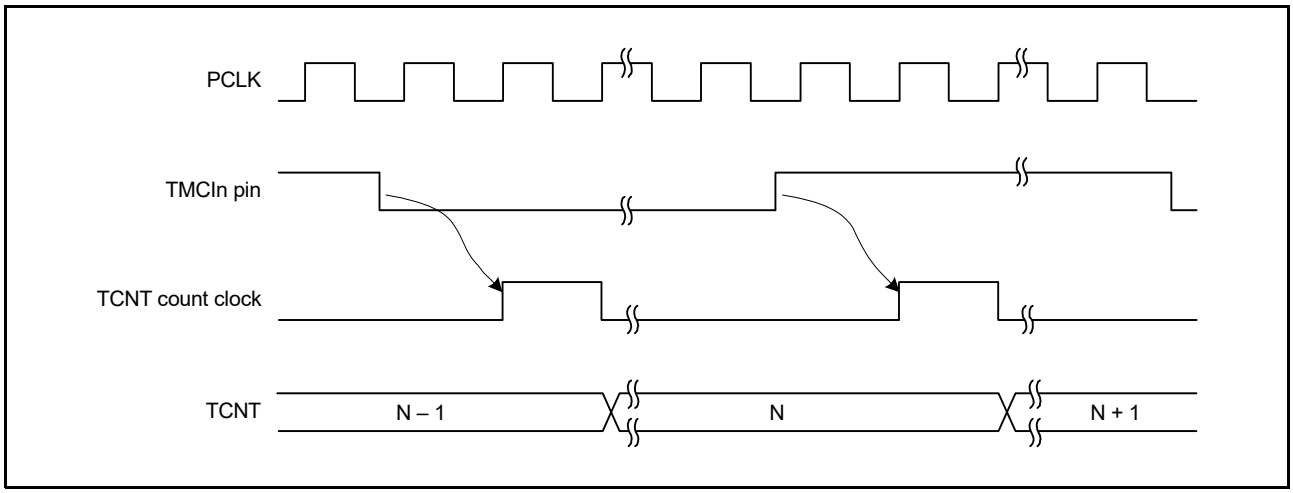

Figure 24.6 Count Timing for External Clock (at Both Edges)

24.4.2 Timing of Interrupt Signal Output on a Compare Match

A compare match refers to a match between the value of the TCORA or TCORB register and the TCNT, and a compare match interrupt signal is output at this time if the interrupt request is enabled. The compare match is generated in the last cycle in which the values match (at the time at which the value counted by TCNT to produce the match is updated). Accordingly, after a match between TCNT and the TCORA or TCORB register is detected, the compare match is not actually generated until the next cycle of the TCNT count clock. Figure 24.7 shows the timing of output of the interrupt signal.

For the corresponding interrupt vector number, refer to section 14, Interrupt Controller (ICUb) and Table 24.6.

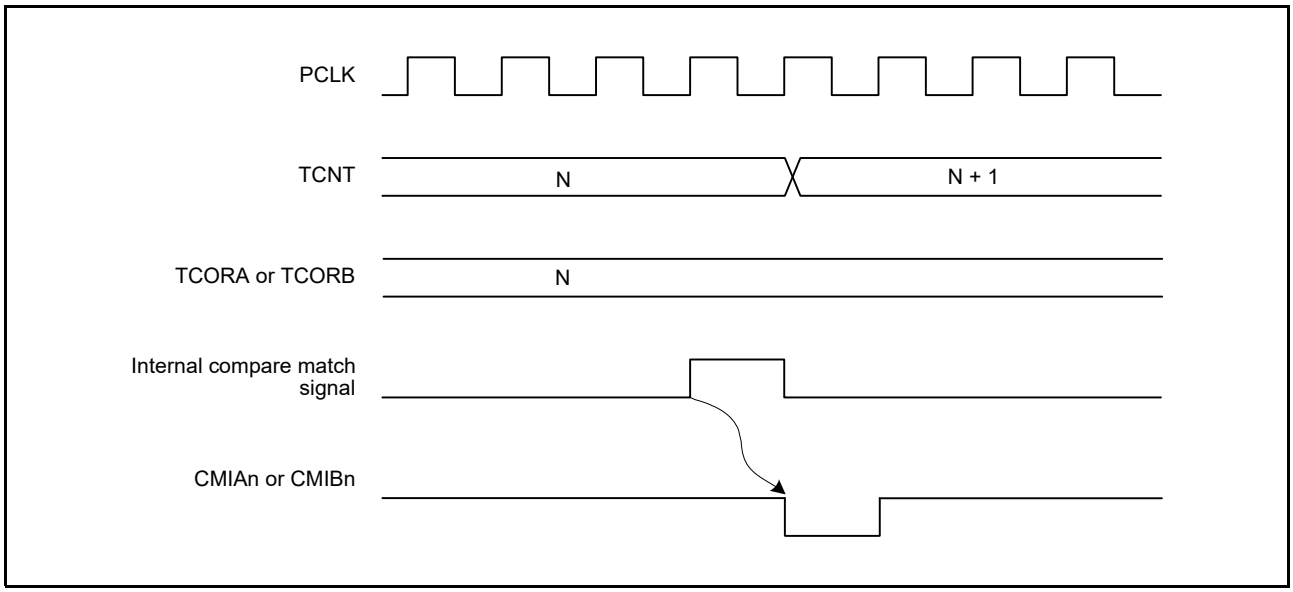

Figure 24.7 Timing of Interrupt Flag Setting to 1 at Compare Match (n = 0 to 3)

24.4.3 Timing of Timer Output Signal at Compare Match

When a compare match signal is generated, the output value specified by the TCSR.OSA[1:0] and OSB[1:0] bits is output on the timer output pin (TMOn).

Figure 24.8 shows the timing when the timer output is toggled by the compare match A signal.

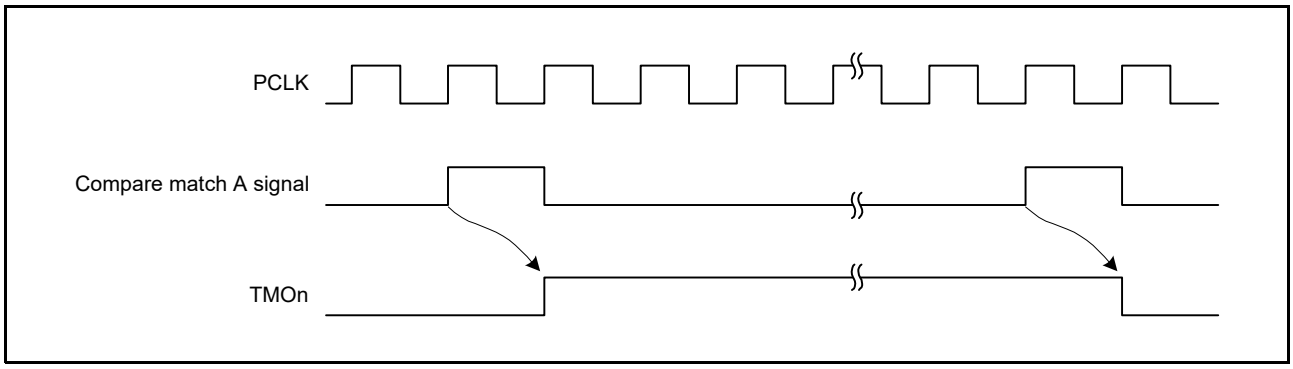

Figure 24.8 Timing of Timer Output Signal at Compare Match A Signal (n = 0 to 3)

24.4.4 Timing of Counter Clear by Compare Match

TCNT is cleared when compare match A or B occurs, depending on the settings of the TCR.CCLR[1:0] bits. Figure 24.9 shows the timing of this operation.

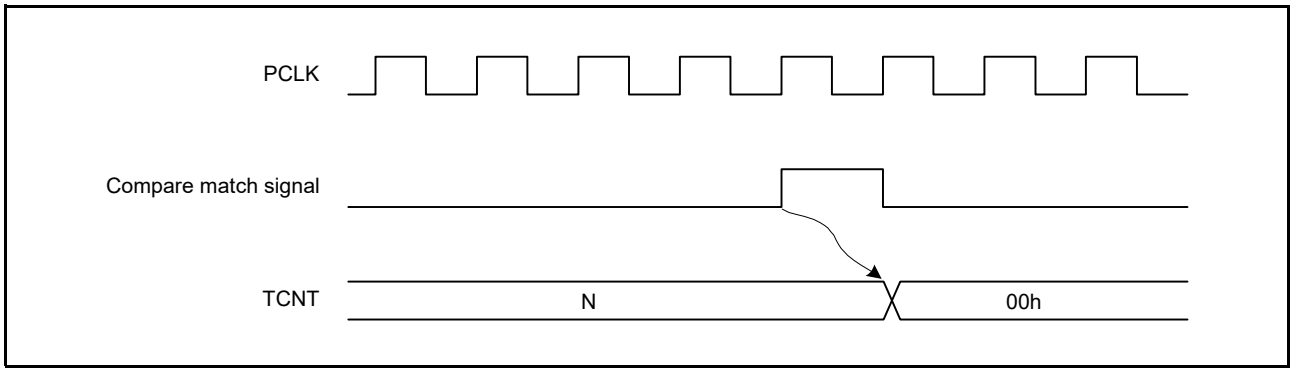

Figure 24.9 Timing of Counter Clear by Compare Match

24.4.5 Timing of the External Reset for TCNT

TCNT is cleared at the rising edge or high level of an external counter reset signal, depending on the settings of the TCR.CCLR[1:0] bits. At least 2 PCLK cycles are required from a reset input to clearing of TCNT. Figure 24.10 and Figure 24.11 show the timing of this operation.

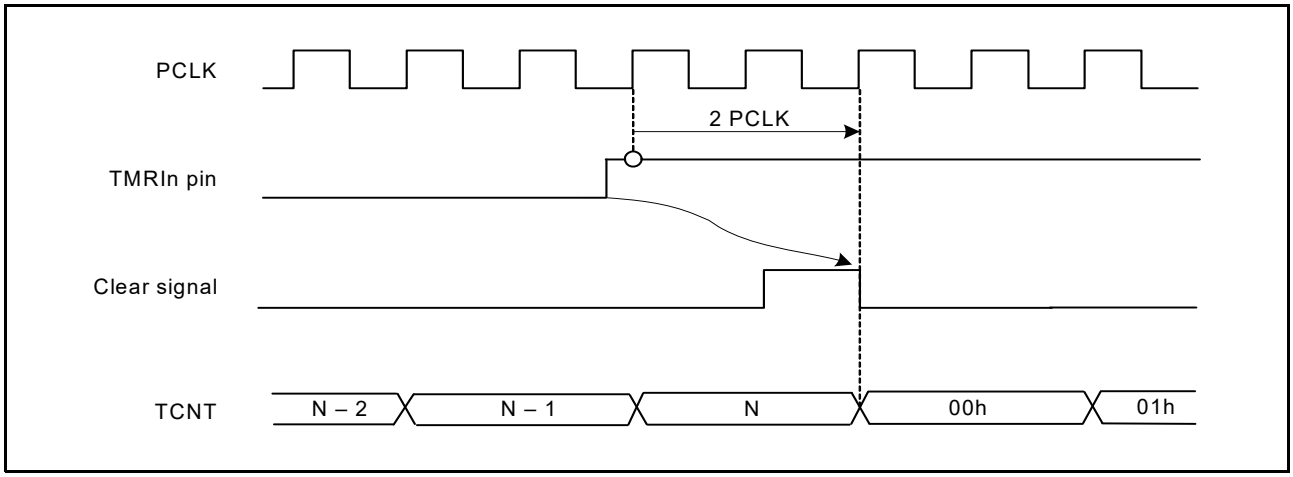

Figure 24.10 Clear Timing by External Counter Reset Signal (Rising Edge)

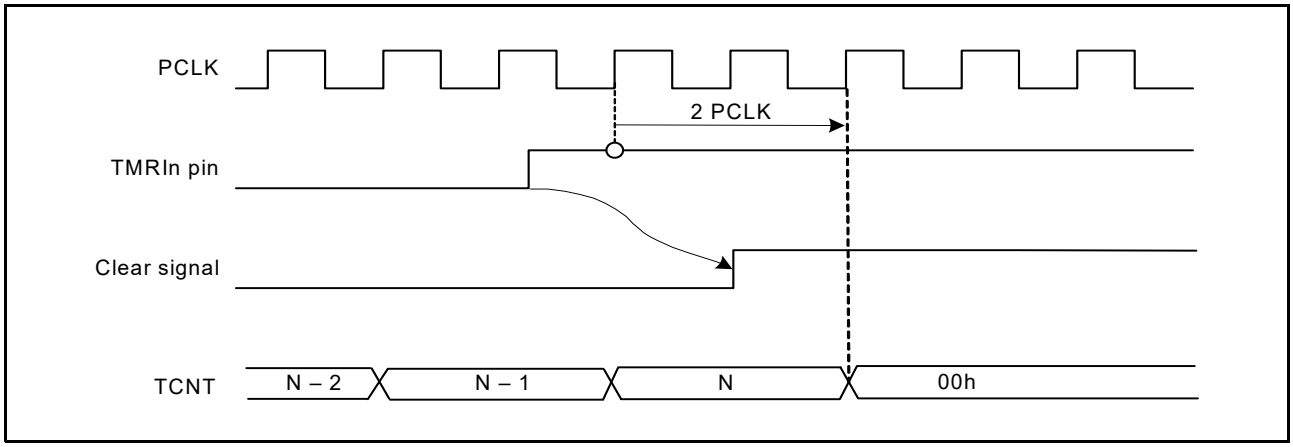

Figure 24.11 Clear Timing by External Counter Reset Signal (High Level)

24.4.6 Timing of Interrupt Signal Output on an Overflow

When TCNT overflows (changes from FFh to 00h), an overflow interrupt signal is output if this interrupt request is enabled.

Figure 24.12 shows the timing of output of the interrupt signal.

For the corresponding interrupt vector number, refer to section 14, Interrupt Controller (ICUb) and Table 24.6.

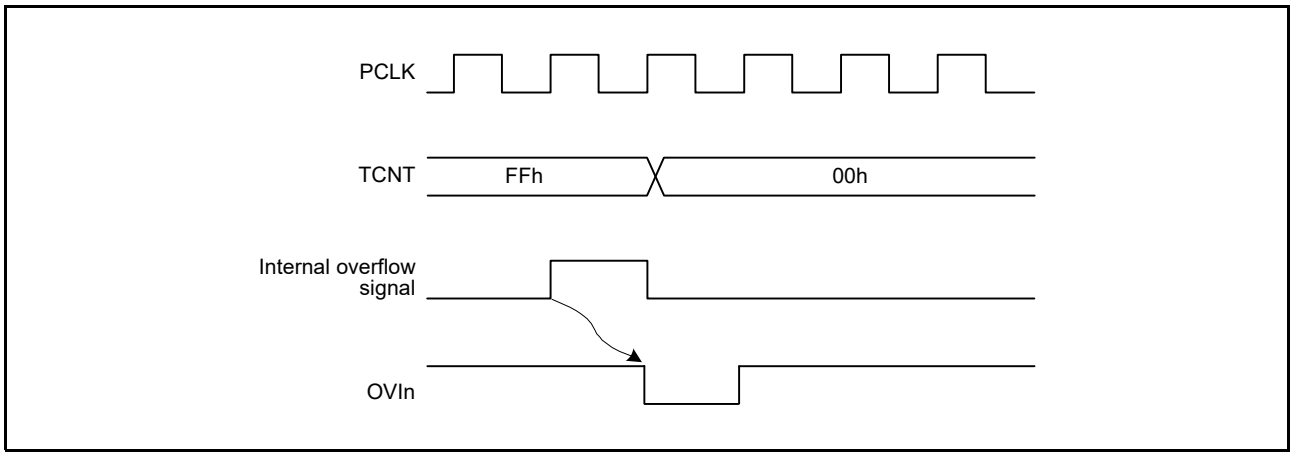

Figure 24.12 Timing of Overflow Interrupt Flag Setting to 1 (n = 0 to 3)

24.5 Operation with Cascaded Connection

If the CSS[1:0] bits in either TMR0.TCCR or TMR1.TCCR are set to 11b, the TMR of the two channels are cascaded. With this configuration, a single 16-bit timer could be used (16-bit counter mode) or compare matches of TMR0 could be counted by TMR1 (compare match count mode).
This section describes unit 0. The operation of unit 1 with cascaded connection is the same as unit 0.

24.5.1 16-Bit Count Mode

When the TMR0.TCCR.CSS[1:0] bits are set to 11b, the timer functions as a single 16-bit timer with TMR0 occupying the upper 8 bits and TMR1 occupying the lower 8 bits.

(1) Counter Clear Specification

- The settings of the TMR0.TCR.CCLR[1:0] bits become effective for the 16-bit counter. If the TMR0.TCR.CCLR[1:0] bits have been set for counter clear at compare match, the 16-bit counter (TMR0.TCNT and TMR1.TCNT together) is cleared when a 16-bit compare match event occurs. The 16-bit counter (TMR0.TCNT and TMR1.TCNT together) is cleared even if counter clear by the TMRI0 pin has been set.
- The settings of the TMR1.TCR.CCLR[1:0] bits are ignored.

(2) Pin Output

- Control of output from the TMO0 pin by the TMR0.TCSR.OSA[1:0] and OSB[1:0] bits is in accordance with the 16-bit compare match conditions.
- Control of output from the TMO1 pin by the TMR1.TCSR.OSA[1:0] and OSB[1:0] bits is in accordance with the lower 8-bit compare match conditions.

24.5.2 Compare Match Count Mode

When the TMR1.TCCR.CSS[1:0] bits are set to 11b, TMR1.TCNT counts the number of occurrences of compare match A for TMR0. TMR0 and TMR1 are controlled independently. Conditions such as generation of interrupts, output from the TMOn pin (n = 0, 1), and counter clear are in accordance with the settings for each channel.

24.6 Interrupt Sources

24.6.1 Interrupt Sources and DTC Activation

There are three interrupt sources for TMRn: CMIAn, CMIBn, and OVIn. Their interrupt sources and priorities are listed in Table 24.6.
It is also possible to activate the DTC by means of CMIAn and CMIBn interrupts.

Table 24.6 TMR Interrupt Sources

Name	Interrupt Sources	DTC Activation	Priority
CMIA0	TMR0.TCORA compare match	Possible	High
CMIB0	TMR0.TCORB compare match	Possible	↑
OVI0	TMR0.TCNT overflow	Not possible	
CMIA1	TMR1.TCORA compare match	Possible	
CMIB1	TMR1.TCORB compare match	Possible	
OVI1	TMR1.TCNT overflow	Not possible	
CMIA2	TMR2.TCORA compare match	Possible	
CMIB2	TMR2.TCORB compare match	Possible	
OVI2	TMR2.TCNT overflow	Not possible	
CMIA3	TMR3.TCORA compare match	Possible	
CMIB3	TMR3.TCORB compare match	Possible	
OVI3	TMR3.TCNT overflow	Not possible	Low

24.7 Link Operation by ELC

24.7.1 Event Signal Output to ELC

The TMR uses the event link controller (ELC) to perform link operation to the previously specified module using the interrupt request signal as the event signal. The TMR outputs compare match A, compare match B, and overflow signals as event signals. Channels that can be used in this way are TMR0 and TMR2.
The event signal can be output regardless of the setting of the corresponding interrupt request enable bits (TMR0.TCR.OVIE or TMR2.TCR.OVIE, TMR0.TCR.CMIEA or TMR2.TCR.CMIEA, and TMR0.TCR.CMIEB or TMR2.TCR.CMIEB). For details, refer to section 19, Event Link Controller (ELC).
The event output function can be used for the cascaded operation.

24.7.2 TMR Operation when Receiving an Event Signal from ELC

The TMR can perform either of the following operations upon the event previously specified by the ELSRn register of the ELC. However, the ELC does not support the cascaded operation.

(1) Count Start

When the TMR count start operation is selected by the ELOPD register of the ELC and the event specified by ELSRn occurs, the TCSTR.TCS bit is set to 1, starting the TMR count operation. After the TMR count start operation is selected by the ELOPD register of the ELC, use the TCCR.CKS[2:0] and CSS[1:0] bits to select the count source.
If the specified event occurs while the TCS bit is 1, the event is ignored.
Write 0 to the TCSTR.TCS bit to stop counting.
When the count start event is input in the count stopped state, the TMR starts counting again according to the CKS[2:0] and CSS[1:0] bits.
The TCS bit is valid only when the ELOPD.TMR0MD[1:0] or ELOPD.TMR2MD[1:0] bits of the ELC select the count start operation.

(2) Event Count

When the TMR event count operation is selected by the ELOPD register of the ELC and the event specified by ELSRn occurs, the events are counted as the count source regardless of the TCCR.CKS[2:0] and CSS[1:0] bit settings. Reading the counter value returns the number of events that have been actually input.

(3) Count Restart

When the TMR count restart operation is selected by the ELOPD register of the ELC and the event specified by ELSRn occurs, the TCNT counter value is modified to the initial value. If the CKS[2:0] and CSS[1:0] bit settings are not disabling the clock input, the count operation is continued.

24.7.3 Notes on Operating TMR According to an Event Signal from ELC

The following describes the notes on operating the TMR using the event link feature.

(1) Count Start

When the event specified by ELSRn occurs during the write cycle to the TCSTR.TCS bit, the cycle is not completed; setting 1 according to the event occurrence takes priority.

(2) Event Count

When the event specified by ELSRn occurs during the write cycle to the TCNT, the cycle is not completed; event count operation according to the event occurrence takes priority.

(3) Count Restart

When the event specified by ELSRn occurs during the write cycle to the TCNT, the cycle is not completed; count value initialization according to the event occurrence takes priority.

24.8 Usage Notes

24.8.1 Module Stop State Setting

Operation of the TMR can be disabled or enabled by using the module stop control registers. The initial setting is for halting of TMR operation. Register access becomes possible after release from the module stop state. For details, refer to section 11, Low Power Consumption.

24.8.2 Notes on Setting Cycle

If the compare match is selected for counter clear, TCNT is cleared at the last PCLK in the cycle in which the value of TCNT matches with that of TCORA or TCORB. TCNT updates the counter value at this last state. Therefore, the counter frequency is obtained by the following formula (f: Counter frequency, PCLK: Operating frequency, N: TCORA and TCORB register setting value).

$$f = PCLK / (N + 1)$$

24.8.3 Conflict between TCNT Write and Counter Clear

If a counter clear signal is generated concurrently with CPU write to TCNT, the clear takes priority and the write is not performed as shown in Figure 24.13.

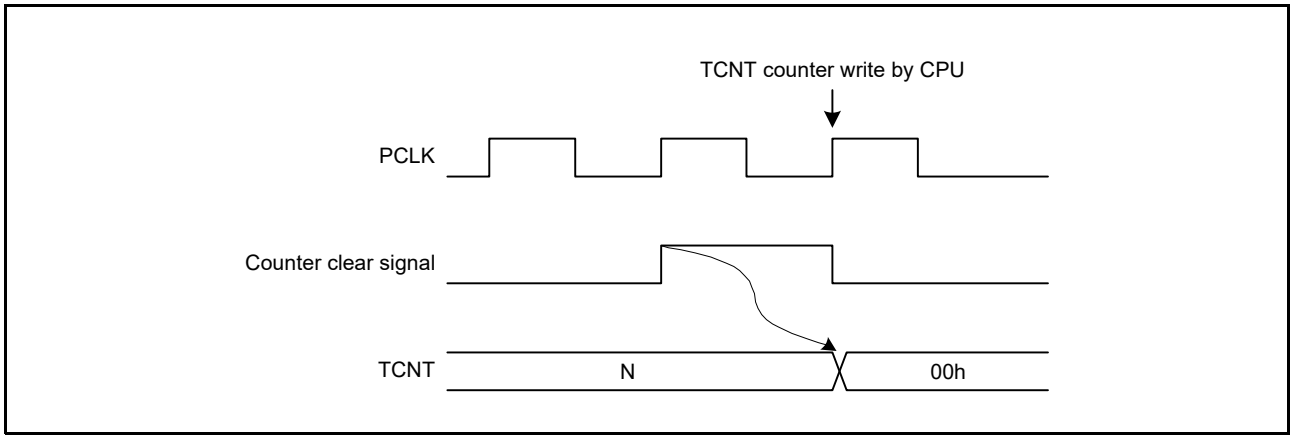

Figure 24.13 Conflict between TCNT Write and Counter Clear

24.8.4 Conflict between TCNT Write and Increment

Even if a counting-up signal is generated concurrently with CPU write to TCNT, the counting-up is not performed and the write takes priority as shown in Figure 24.14.

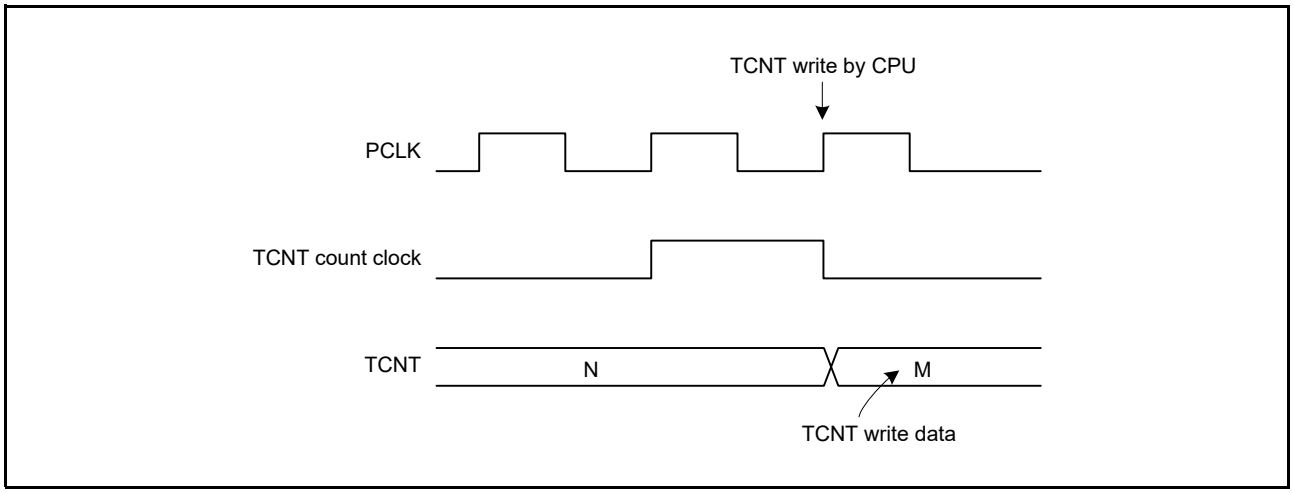

Figure 24.14 Conflict between TCNT Write and Increment

24.8.5 Conflict between TCORA or TCORB Write and Compare Match

Even if a compare match signal is generated simultaneously with CPU write to TCORA or TCORB as shown in Figure 24.15, the write takes priority and the compare match signal does not reach High level.

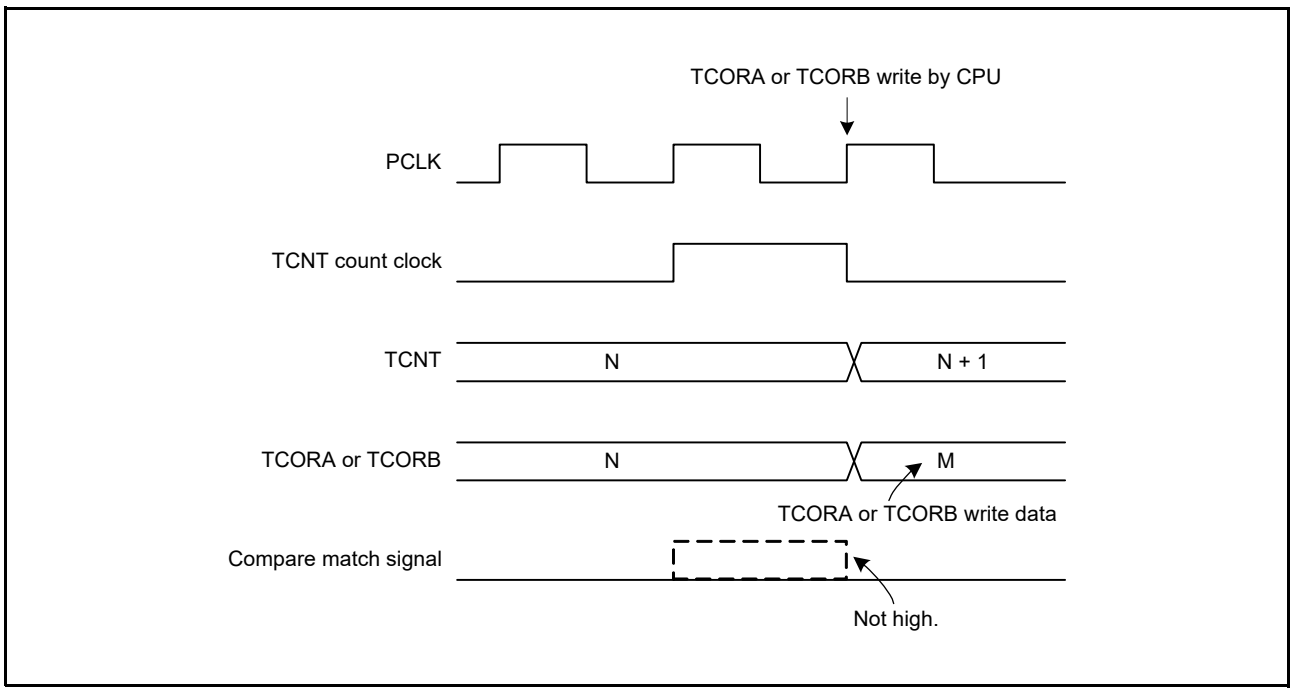

Figure 24.15 Conflict between TCORA or TCORB Write and Compare Match

24.8.6 Conflict between Compare Matches A and B

If compare match events A and B occur at the same time, the 8-bit timer operates in accordance with the priorities for the output methods high for compare match A and compare match B, as listed in Table 24.7.

Table 24.7 Timer Output Priorities

Output Setting	Priority
Toggle output	High
High output	↑
Low output	
No change	Low

24.8.7 Switching of Internal Clocks and TCNT Operation

TCNT may be incremented erroneously depending on when the internal clock is switched. Table 24.8 lists the relationship between the timing at which the internal clock is switched (by writing to the TCCR.CKS[2:0] bits) and the operation of TCNT.

When TCNT count clock is generated from an internal clock, the rising edge of the internal clock pulse are always monitored. If the signal levels of the clocks before and after switching change from low to high as shown in No. 2 in Table 24.8, the change is considered as an edge. Therefore, a TCNT count clock is generated and TCNT is incremented. The erroneous increment of TCNT can also happen when switching between internal and internal clocks.

Table 24.8 Switching of Internal Clocks and TCNT Operation (1/2)

No.	Timing to Change the TCCR.CKS[2:0] Bits	TCNT Counter Operation
1	Switching from low to low*1	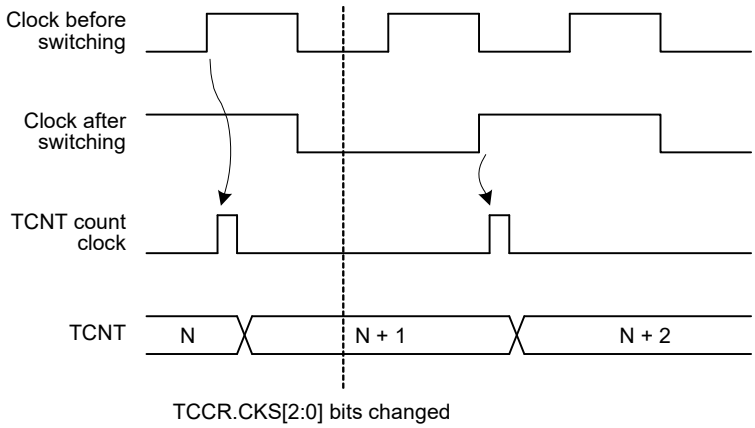
2	Switching from low to high*2	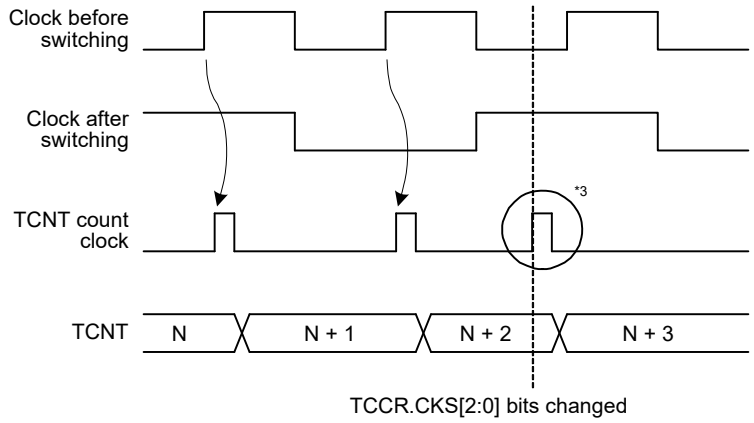

Table 24.8 Switching of Internal Clocks and TCNT Operation (2/2)

No.	Timing to Change the TCCR.CKS[2:0] Bits	TCNT Counter Operation
3	Switching from high to low*4	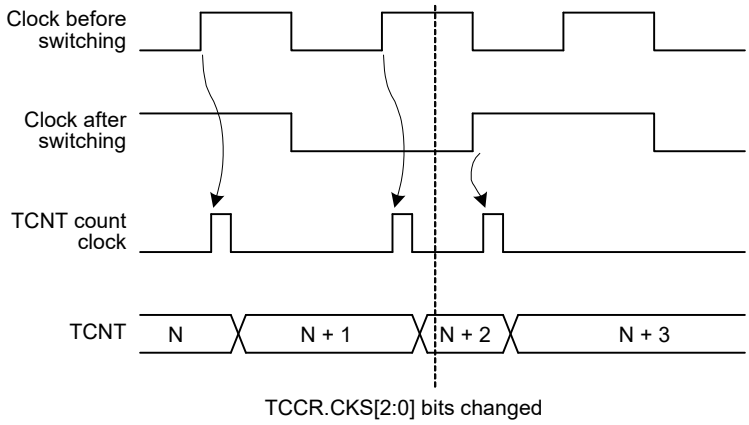
4	Switching from high to high	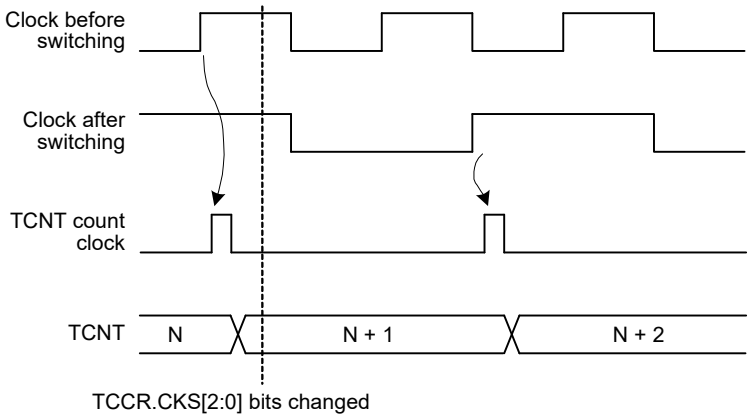

Note 1. Includes switching from low to stop, and from stop to low.
Note 2. Includes switching from stop to high.
Note 3. Generated because the change of the signal levels is considered as an edge; TCNT counter is incremented.
Note 4. Includes switching from high to stop.

24.8.8 Clock Source Setting with Cascaded Connection

If 16-bit counter mode and compare match count mode are specified at the same time, count clocks for TMR0.TCNT and TMR1.TCNT (TMR2.TCNT and TMR3.TCNT) are not generated, and the counter stops. Do not specify 16-bit counter mode and compare match count mode simultaneously.

24.8.9 Continuous Output of Compare Match Interrupt Signal

When TCORA or TCORB is set to 00h, PCLK/1 is set as the internal clock, and compare match is set as the counter clear source, the TCNT counter remains 00h and is not updated, and a compare match interrupt signal is output continuously to form a flat signal level.
At this time, the interrupt controller cannot detect the second and subsequent interrupts.
Figure 24.16 shows operation timing when the compare match interrupt signal is continuously output.

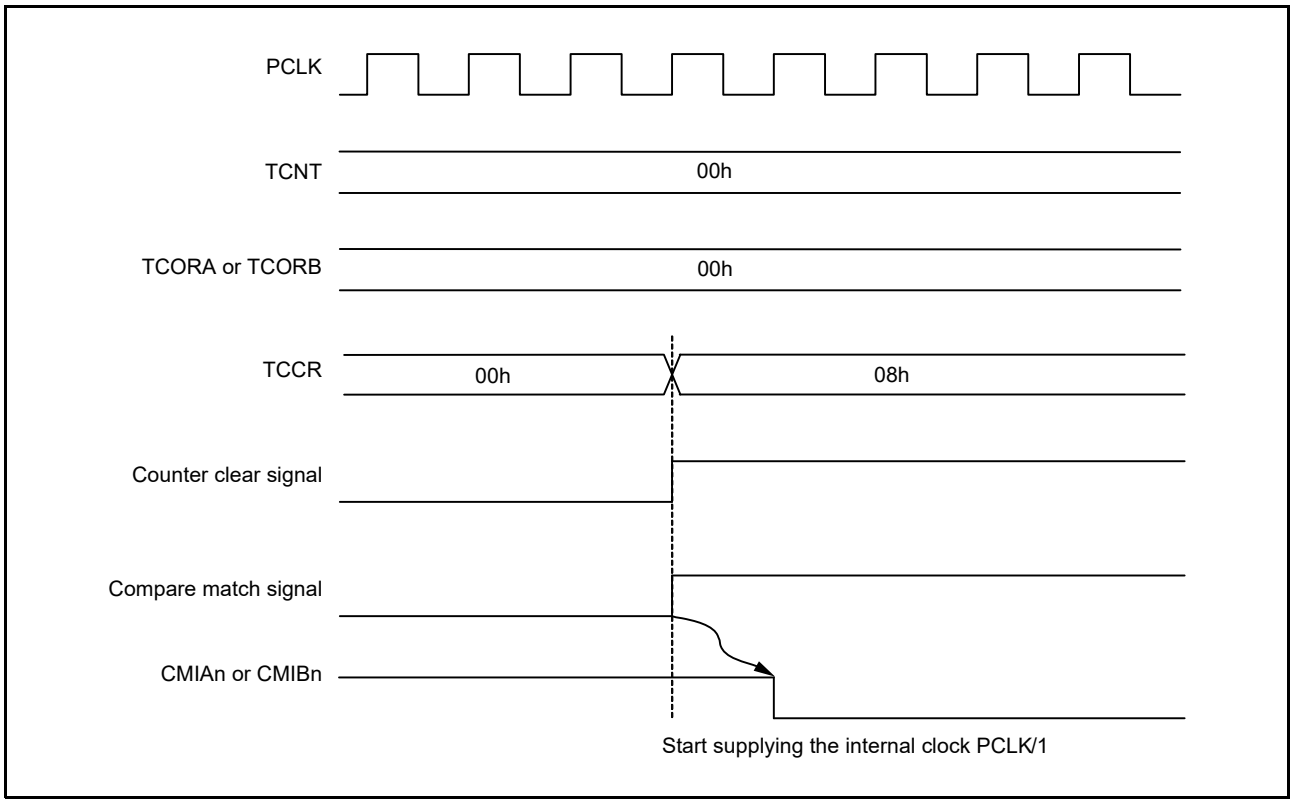

Figure 24.16 Continuous Output of Compare Match Interrupt Signal (n = 0 to 3)

25. Compare Match Timer (CMT)

This MCU has an on-chip compare match timer (CMT) unit (unit 0) consisting of a two-channel 16-bit timer (i.e., a total of two channels). The CMT has a 16-bit counter, and can generate interrupts at set intervals.
In this section, “PCLK” is used to refer to PCLKB.

25.1 Overview

Table 25.1 lists the specifications for the CMT.
Figure 25.1 shows a block diagram of the CMT (unit 0). A two-channel CMT constitutes a unit.

Table 25.1 CMT Specifications

Item	Description
Count clocks	• Four frequency dividing clocks One clock from PCLK/8, PCLK/32, PCLK/128, and PCLK/512 can be selected for each channel.
Interrupt	A compare match interrupt can be requested for each channel.
Event link function (output)	An event signal is output upon a CMT1 compare match.
Event link function (input)	Linking to the specified module is possible. CMT1 count start, event counter, or count restart operation is possible.
Low power consumption function	Module stop state can be set.

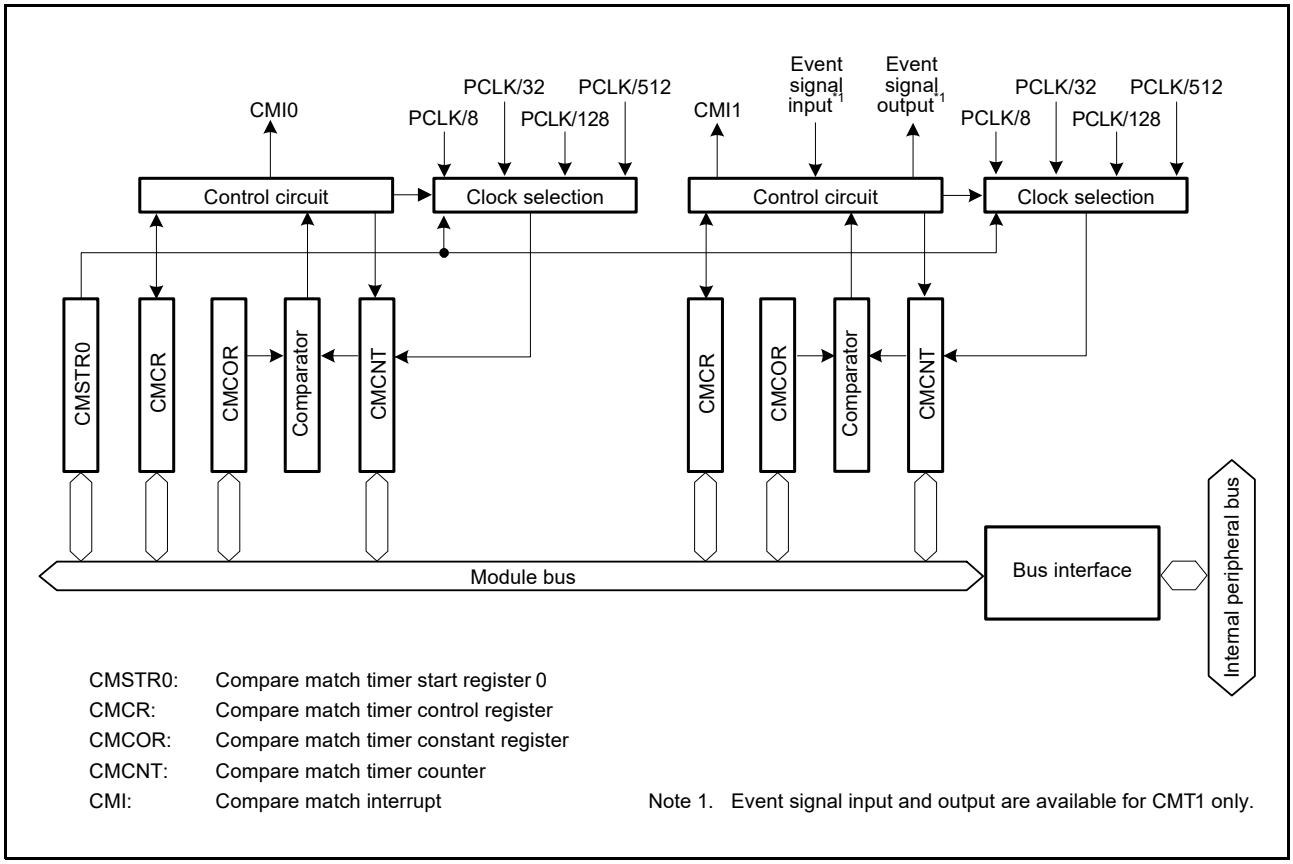

Figure 25.1 CMT (Unit 0) Block Diagram

25.2 Register Descriptions

25.2.1 Compare Match Timer Start Register 0 (CMSTR0)

Address(es): CMT.CMSTR0 0008 8000h

	b15	b14	b13	b12	b11	b10	b9	b8	b7	b6	b5	b4	b3	b2	b1	b0
	—	—	—	—	—	—	—	—	—	—	—	—	—	—	STR1	STR0
Value after reset:	0	0	0	0	0	0	0	0	0	0	0	0	0	0	0	0

Bit	Symbol	Bit Name	Description	R/W
b0	STR0	Count Start 0	0: CMT0.CMCNT count is stopped. 1: CMT0.CMCNT count is started.	R/W
b1	STR1	Count Start 1	0: CMT1.CMCNT count is stopped. 1: CMT1.CMCNT count is started.	R/W
b15 to b2	—	Reserved	These bits are read as 0. The write value should be 0.	R/W

25.2.2 Compare Match Timer Control Register (CMCR)

Address(es): CMT0.CMCR 0008 8002h, CMT1.CMCR 0008 8008h

	b15	b14	b13	b12	b11	b10	b9	b8	b7	b6	b5	b4	b3	b2	b1	b0
	—	—	—	—	—	—	—	—	—	CMIE	—	—	—	—	CKS[1:0]	
Value after reset:	0	0	0	0	0	0	0	0	x	0	0	0	0	0	0	0

x: Undefined

Bit	Symbol	Bit Name	Description	R/W
b1, b0	CKS[1:0]	Clock Select	b1 b0 0 0: PCLK/8 0 1: PCLK/32 1 0: PCLK/128 1 1: PCLK/512	R/W
b5 to b2	—	Reserved	These bits are read as 0. The write value should be 0.	R/W
b6	CMIE	Compare Match Interrupt Enable	0: Compare match interrupt (CMIn) disabled 1: Compare match interrupt (CMIn) enabled	R/W
b7	—	Reserved	This bit is read as undefined. The write value should be 1.	R/W
b15 to b8	—	Reserved	These bits are read as 0. The write value should be 0.	R/W

CKS[1:0] Bits (Clock Select)

These bits select the count source from four frequency dividing clocks obtained by dividing the peripheral module clock (PCLK).

When the CMSTR0.STRn (n = 0, 1) bit is set to 1, the CMCNT counter starts counting up on the clock selected with the CKS[1:0] bits.

CMIE Bit (Compare Match Interrupt Enable)

The CMIE bit enables or disables compare match interrupt (CMIn) (n = 0, 1) generation when the CMCNT counter and the CMCOR register values match.

25.2.3 Compare Match Counter (CMCNT)

Address(es): CMT0.CMCNT 0008 8004h, CMT1.CMCNT 0008 800Ah

	b15	b14	b13	b12	b11	b10	b9	b8	b7	b6	b5	b4	b3	b2	b1	b0
Value after reset:	0	0	0	0	0	0	0	0	0	0	0	0	0	0	0	0

The CMCNT counter is a readable/writable up-counter.
When an frequency dividing clock is selected by the CMCR.CKS[1:0] bits and the CMSTR0.STRn (n = 0, 1) bit is set to 1, the CMCNT counter starts counting up using the selected clock.
When the value in the CMCNT counter and the value in the CMCOR register match, the CMCNT counter is set to 0000h. At the same time, a compare match interrupt (CMIn) (n = 0, 1) is generated.

25.2.4 Compare Match Constant Register (CMCOR)

Address(es): CMT0.CMCOR 0008 8006h, CMT1.CMCOR 0008 800Ch

	b15	b14	b13	b12	b11	b10	b9	b8	b7	b6	b5	b4	b3	b2	b1	b0
Value after reset:	1	1	1	1	1	1	1	1	1	1	1	1	1	1	1	1

The CMCOR register is a readable/writable register to set a value for compare match with the CMCNT counter.

25.3 Operation

25.3.1 Periodic Count Operation

When an frequency dividing clock is selected by the CMCR.CKS[1:0] bits and the CMSTR0.STRn (n = 0, 1) bit is set to 1, the CMCNT counter starts counting up using the selected clock.
When the value in the counter and the value in the register match, a compare match interrupt (CMIn) (n = 0,1) is generated. The CMCNT counter then starts counting up again from 0000h. Figure 25.2 shows the operation of the CMCNT counter.

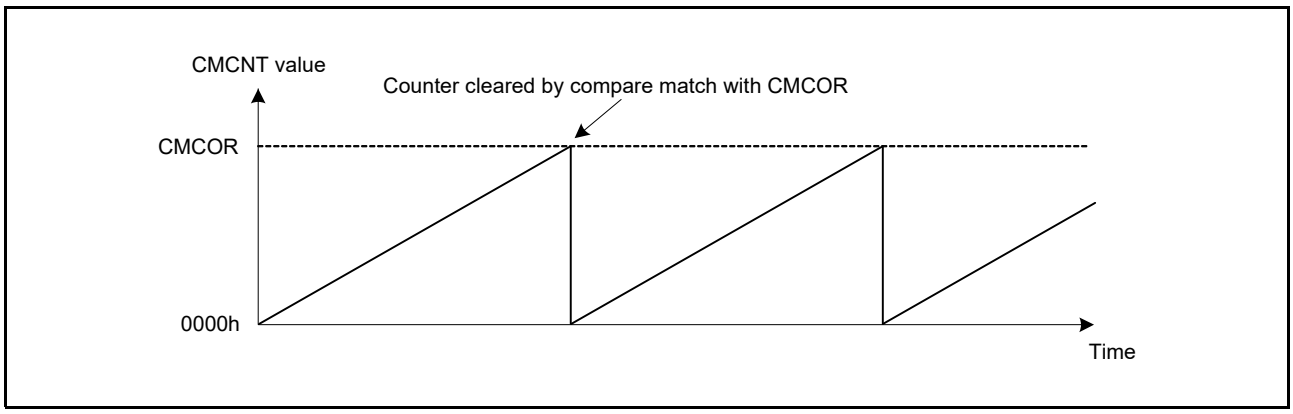

Figure 25.2 CMCNT Counter Operation

25.3.2 CMCNT Count Timing

As the count clock to be input to the CMCNT counter, one of four frequency dividing clocks (PCLK/8, PCLK/32, PCLK/128, and PCLK/512) obtained by dividing the peripheral module clock (PCLK) can be selected with the CMCR.CKS[1:0] bits. Figure 25.3 shows the timing of the CMCNT counter.

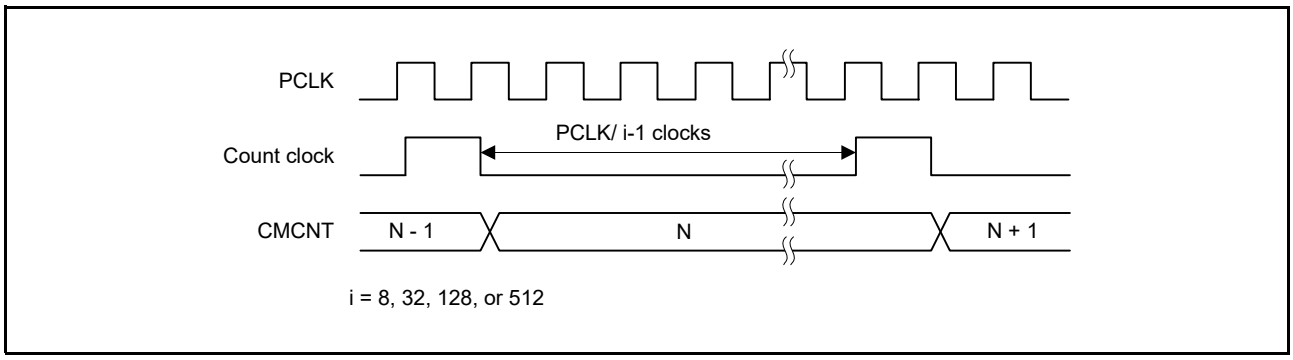

Figure 25.3 CMCNT Count Timing

25.4 Interrupts

25.4.1 Interrupt Sources

The CMT has channels and each of them to which a different vector address is allocated has a compare match interrupt (CMIn) (n = 0, 1). When a compare match interrupt occurs, the corresponding interrupt request is output.
When the interrupt request is used to generate a CPU interrupt, the priority of channels can be changed by the interrupt controller settings. For details, see section 14, Interrupt Controller (ICUb).

Table 25.2 CMT Interrupt Sources

Name	Interrupt Sources	DTC Activation	DMAC Activation
CMI0	Compare match in CMT0	Possible	Possible
CMI1	Compare match in CMT1	Possible	Possible

25.4.2 Timing of Compare Match Interrupt Generation

When the CMCNT counter and the CMCOR register match, a compare match interrupt (CMIn) (n = 0, 1) is generated. A compare match signal is generated at the last state in which the values match (the timing when the CMCNT counter updates the matched count value). That is, after a match between the CMCOR register and the CMCNT counter, the compare match signal is not generated until the next the CMCNT counter input clock.
Figure 25.4 shows the timing of a compare match interrupt.

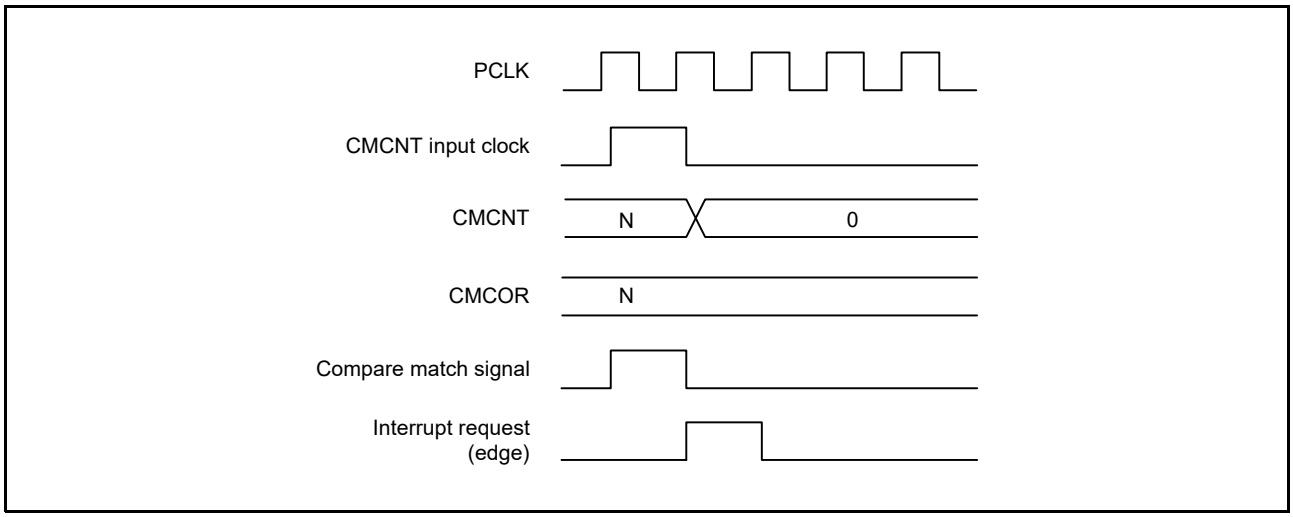

Figure 25.4 Timing of a Compare Match Interrupt

25.5 Link Operations by ELC

25.5.1 Event Signal Output to ELC

The CMT uses the event link controller (ELC) to perform link operation to a preset module using the interrupt request signal as the event signal. The CMT outputs the event signal upon a CMT1 compare match.
The event signal can be output regardless of the setting of the corresponding interrupt request enable bit (CMTn.CMCR.CMIE).

25.5.2 CMT Operation When Receiving an Event Signal from ELC

The CMT can perform either of the following operations upon the event preset by the ELSR7 register of the ELC.

(1) Count Start

When the CMT count start operation is selected by the ELOPC register of the ELC and the event specified by ELSR7 occurs, the CMSTR0.STR1 bit is set to 1, starting the CMT count operation.
However, if the specified event occurs while the CMSTR0.STR1 bit is 1, the event is ignored.

(2) Event Count

When the CMT event count operation is selected by the ELOPC register of the ELC and the event specified by ELSR7 occurs with the CMSTR0.STR1 bit being 1, the events are counted as the count source regardless of the CMT1.CMCR.CKS[1:0] bit setting. Reading the counter value returns the number of events that have been actually input.

(3) Count Restart

When the CMT count restart operation is selected by the ELOPC register of the ELC and the event specified by ELSR7 occurs, the CMT1.CMCNT counter value is modified to the initial value. If the CMSTR0.STR1 bit is 1 here, the count operation can be continued.

25.5.3 Notes on Operating CMT According to an Event Signal from ELC

The following describes the notes on operating the CMT using the event link feature.

(1) Count Start

When the event specified by ELSR7 occurs during the write cycle to the CMSTR0.STR1 bit, the cycle is not completed; setting 1 according to the event occurrence takes priority.

(2) Event Count

When the event specified by ELSR7 occurs during the write cycle to the CMT1.CMCNT, the cycle is not completed; event count operation according to the event occurrence takes priority.

(3) Count Restart

When the event specified by ELSR7 occurs during the write cycle to the CMT1.CMCNT, the cycle is not completed; count value initialization according to the event occurrence takes priority.

25.6 Usage Notes

25.6.1 Setting the Module Stop Function

The CMT can be enabled or disabled using the module stop control register. After a reset, the CMT is in the module stop state. The registers can be accessed by releasing the module stop state. For details, refer to section 11, Low Power Consumption.

25.6.2 Conflict between CMCNT Counter Writing and Compare Match

When the compare match signal is generated while writing to the CMCNT counter, clearing the CMCNT counter has priority over writing to it. In this case, the CMCNT counter is not written to. Figure 25.5 shows the timing to clear the CMCNT counter.

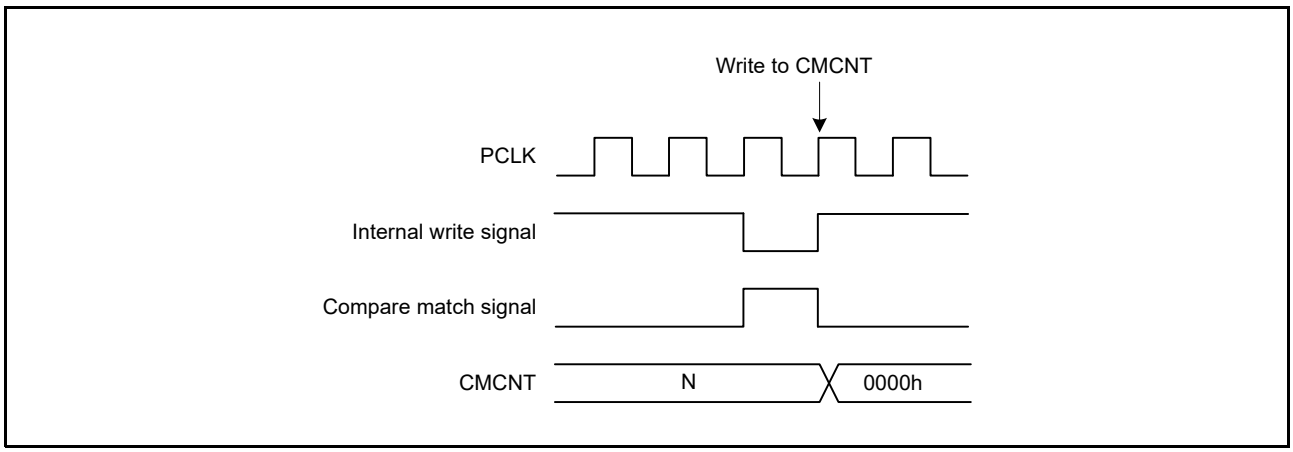

Figure 25.5 Conflict between CMCNT Counter Writing and Compare Match

25.6.3 Conflict between CMCNT Counter Writing and Incrementing

If writing to the counter and the incrementing conflict, the writing has priority over the incrementing. Figure 25.6 shows the timing to write the CMCNT counter.

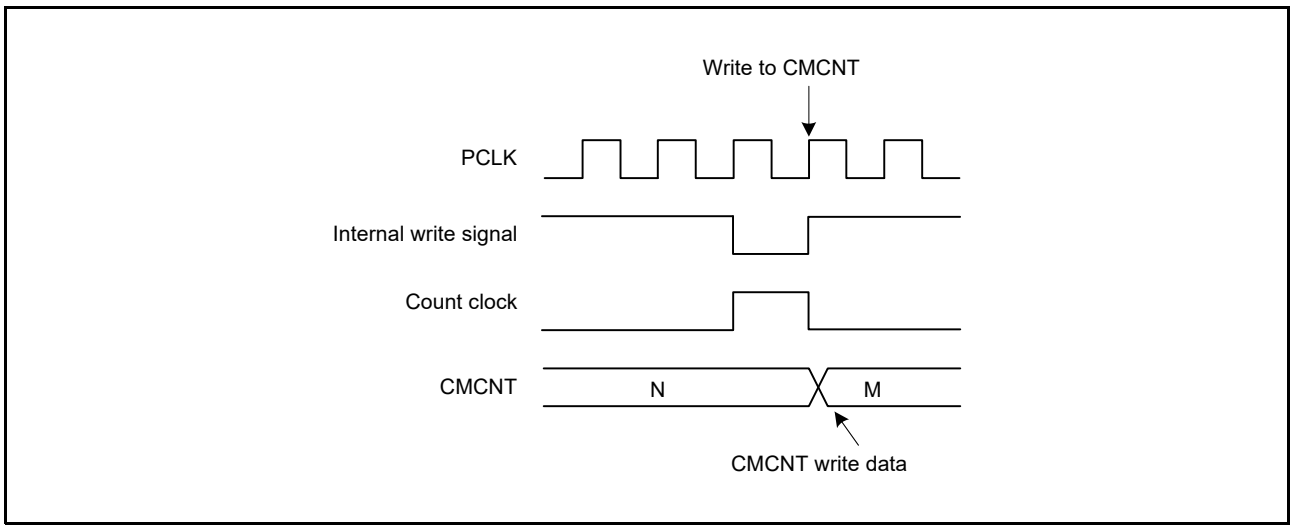

Figure 25.6 Conflict between CMCNT Counter Writing and Incrementing

26. Low-Power Timer (LPT)

26.1 Overview

This MCU integrates a low-power timer (LPT) that consists of a single-channel 16-bit timer. The LPT uses a IWDT-dedicated clock as the clock source, and can continue counting operation even in software standby mode. A compare match signal can be used to return from software standby mode to normal operating mode.

Table 26.1 lists the specifications of the LPT and Figure 26.1 shows a block diagram of the LPT.

Table 26.1 LPT Specifications

Item	Description
Clock source	IWDT-dedicated clock
Clock division ratio	Divided by 2, 4, 8, 16, or 32
Counting operation	• Count up using the 16-bit up-counter • Counting operation can be continued even in software standby mode
Compare match	Compare match 0 (a compare match signal is generated only in software standby mode)
Event link function (output)	Compare match 0 (a compare match signal is generated only in software standby mode)

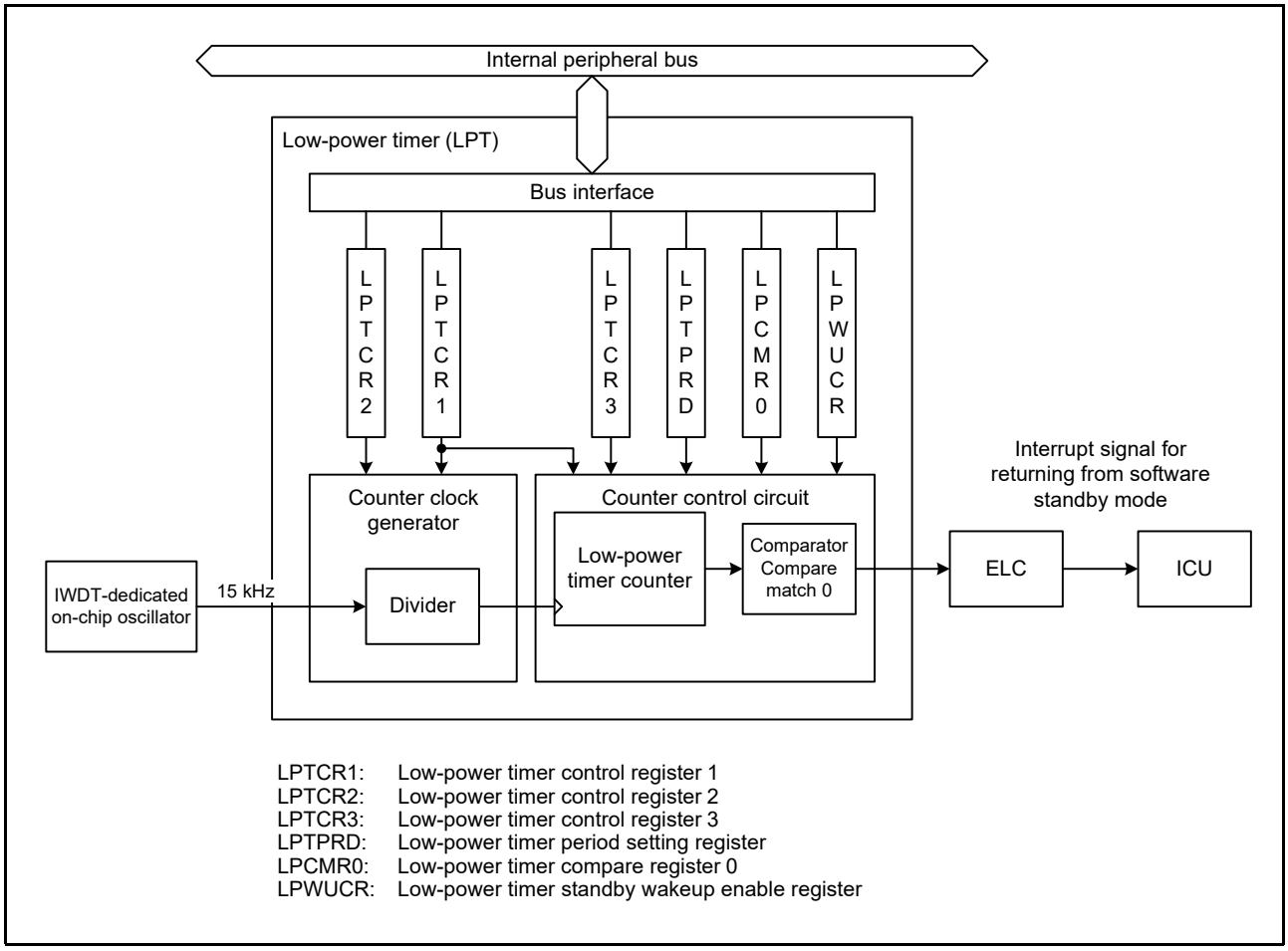

Figure 26.1 LPT Block Diagram

26.2 Register Descriptions

26.2.1 Low-Power Timer Control Register 1 (LPTCR1)

Address(es): LPT.LPTCR1 0008 00B0h

	b7	b6	b5	b4	b3	b2	b1	b0
	—	LPCMRE0	—	LPCNTCKSEL	—	LPCNTPSSEL[2:0]		
Value after reset:	0	0	0	0	0	0	0	1

Bit	Symbol	Bit Name	Description	R/W
b2 to b0	LPCNTPSSEL[2:0]	Clock Division Ratio Select*1	b2 b0 0 0 1: Divided by 2 0 1 0: Divided by 4 0 1 1: Divided by 8 1 0 0: Divided by 16 1 0 1: Divided by 32 Settings other than above are prohibited.	R/W
b3	—	Reserved	This bit is read as 0. The write value should be 0.	R/W
b4	LPCNTCKSEL	Clock Source Select*1, *2	0: No clock 1: IWDT-dedicated clock (IWDTCLK)*3	R/W
b5	—	Reserved	This bit is read as 0. The write value should be 0.	R/W
b6	LPCMRE0	Compare Match 0 Enable*4	0: Compare match 0 is disabled 1: Compare match 0 is enabled	R/W
b7	—	Reserved	This bit is read as 0. The write value should be 0.	R/W

Note: Set the PRCR.PRC2 bit to 1 (write enabled) before rewriting this register.
Note 1. Rewrite these bits while the LPTCR2.LPCNTSTP bit is 1 (supply of clock to the low-power timer is stopped).
Note 2. Satisfy that the frequency of the system clock (ICLK) and peripheral module clock (PCLKB) ≥ 4 × (the frequency of the clock source).
Note 3. A clock generated by the IWDT-dedicated on-chip oscillator (IWDTCLK) is supplied to the low-power timer. When modifying this bit, make sure that the IWDT-dedicated on-chip oscillator is oscillating stably.
When the IWDTCLK is used as the clock source for the low-power timer, set the OFS0.IWDTSLCSTP bit to 0 (counting stop is disabled) in IWDT auto-start mode operation, and set the IWDTCSTPR.SLCSTP bit to 0 (count stop is disabled) in other modes. Without this setting, the IWDT-dedicated on-chip oscillator is stopped in software standby mode.
Note 4. Rewrite this bit while the LPTCR3.LPCNTEN bit is 0 (low-power timer counter stops).

The LPTCR1 register is used to control the low-power timer.

LPCNTCKSEL Bit (Clock Source Select)

This bit is used to set the IWDT-dedicated clock as the clock source for the low-power timer.

LPCMRE0 Bit (Compare Match 0 Enable)

This bit enables or disables low-power timer compare match 0.
When the low-power timer is put into operation and the MCU makes a transition to software standby mode while this bit and the LPWUCR.LPWKUPEN bit are set to 1 (wakeup from software standby mode using low-power timer is enabled), the MCU returns from software standby mode to normal operating mode through the event link controller (ELC) when the value of the low-power timer counter matches the value of the LPCMR0 register.
Settings for the interrupt and ELC are necessary to use a compare match 0 as a trigger source to return from software standby mode.
Refer to section 19, Event Link Controller (ELC) for details on the ELC settings, and refer to section 14, Interrupt Controller (ICUb) for details on the interrupt settings.

An interrupt request at compare match 0 is generated only in software standby mode. It is not generated in normal operating mode, sleep mode, and deep sleep mode.

26.2.2 Low-Power Timer Control Register 2 (LPTCR2)

Address(es): LPT.LPTCR2 0008 00B1h

	b7	b6	b5	b4	b3	b2	b1	b0
	—	—	—	—	—	—	—	LPCNT STP
Value after reset:	0	0	0	0	0	0	0	1

Bit	Symbol	Bit Name	Description	R/W
b0	LPCNTSTP	Clock Supply Control	0: Clock is supplied to the low-power timer. 1: Supply of clock to the low-power timer is stopped.	R/W
b7 to b1	—	Reserved	These bits are read as 0. The write value should be 0.	R/W

Note: Set the PRCR.PRC2 bit to 1 (write enabled) before rewriting this register.

The LPTCR2 register is used to control supply of the clock to be used for the low-power timer.

LPCNTSTP Bit (Clock Supply Control)

This bit is used to supply or stop the clock to be used for the low-power timer. When this bit is set to 0, the clock signal is supplied to the low-power timer counter and divider.

26.2.3 Low-Power Timer Control Register 3 (LPTCR3)

Address(es): LPT.LPTCR3 0008 00B2h

	b7	b6	b5	b4	b3	b2	b1	b0
	—	—	—	—	—	—	LPCNTRST	LPCNTEN
Value after reset:	0	0	0	0	0	0	0	0

Bit	Symbol	Bit Name	Description	R/W
b0	LPCNTEN	Low-Power Timer Counter Operation Control	0: Low-power timer counter stops 1: Low-power timer counter operates	R/W
b1	LPCNTRST	Low-Power Timer Counter Clear*1, *2	• When writing 0: Has no effect 1: Clears divider and counter • When reading 0: Clearing is completed 1: Clearing is in progress	R/W
b7 to b2	—	Reserved	These bits are read as 0. The write value should be 0.	R/W

Note: Set the PRCR.PRC2 bit to 1 (write enabled) before rewriting this register.
Note: Rewrite this register while the LPTCR2.LPCNTSTP bit is 0 (clock is supplied to the low-power timer).
Note 1. Rewrite this bit while the LPTCR3.LPCNTEN bit is 0 (low-power timer counter stops).
Note 2. When clearing the low-power timer counter successively, confirm that the LPCNTRST bit becomes 0, wait for at least one cycle of the IWDTCLK, and then write 1 to the LPCNTRST bit again.

The LPTCR3 register controls operations of and clears the low-power timer counter and divider.

LPCNTEN Bit (Low-Power Timer Counter Operation Control)

This bit is used to operate or stop the low-power timer counter and divider.
When this bit is set to 1 while the LPTCR2.LPCNTSTP bit is 0 (clock is supplied to the low-power timer), the low-power timer counter and divider start operating.
Do not write 1 to the LPCNTRST bit while this bit is 1.

LPCNTRST Bit (Low-Power Timer Counter Clear)

This bit is used to clear the low-power timer counter and divider.
When this bit is set to 1 while the LPTCR2.LPCNTSTP bit is 0 (clock is supplied to the low-power timer), the low-power timer counter and divider are cleared in synchronization with the clock used for the low-power timer. Once clearing is complete, this bit automatically becomes 0.
When 1 is written to this bit, confirm that its value becomes 0 before executing the next processing.

26.2.4 Low-Power Timer Period Setting Register (LPTPRD)

Address(es): LPT.LPTPRD 0008 00B4h

	b15	b14	b13	b12	b11	b10	b9	b8	b7	b6	b5	b4	b3	b2	b1	b0
	LPCNTPRD[15:0]															
Value after reset:	1	1	1	1	1	1	1	1	1	1	1	1	1	1	1	1

Bit	Symbol	Bit Name	Description	R/W
b15 to b0	LPCNTPRD[15:0]	Low-Power Timer Period Setting	Set the period of the low-power timer. Setting range: 0001h to FFFFh	R/W

Note: Set the PRCR.PRC2 bit to 1 (write enabled) before rewriting this register.
Note: Rewrite this register while the LPTCR3.LPCNTEN bit is 0 (low-power timer counter stops).

The LPTPRD register is used to set the period of the low-power timer.
The period of the low-power timer is proportional to “LPTPRD + 1” and calculated by the following formula:

Period of low-power timer = period of clock source × division ratio × (LPTPRD + 1)

When the value of the low-power timer counter matches the set value, the counter is cleared to 0000h and continues counting.
Do not set this register to 0000h.

Table 26.2 lists examples of setting the periods of the low-power timer. These examples show values most approximate to the target periods.

Table 26.2 Example of Low-Power Timer Period Settings for IWDTCLK

Division ratio	Divided by 2			Divided by 4			Divided by 8		
Target period (ms)	Set Value	Actual period (ms)	Error (%)	Set Value	Actual period (ms	Error (%)	Set Value	Actual period (ms	Error (%)
1	0006h	0.93	–6.67	0003h	1.07	6.67	0001h	1.07	6.67
2	000Dh	1.87	–6.67	0006h	1.87	–6.67	0003h	2.13	6.67
5	0024h	4.93	–1.33	0011h	4.80	–4.00	0008h	4.80	–4.00
10	004Ah	10.00	0.00	0024h	9.87	–1.33	0011h	9.60	–4.00
20	0095h	20.00	0.00	004Ah	20.00	0.00	0024h	19.73	–1.33
50	0176h	50.00	0.00	00BAh	49.87	–0.27	005Ch	49.60	–0.80
100	02EDh	100.00	0.00	0176h	100.00	0.00	00BAh	99.73	–0.27
200	05DBh	200.00	0.00	02EDh	200.00	0.00	0176h	200.00	0.00
500	0EA4h	499.87	–0.03	0751h	499.73	–0.05	03A8h	499.73	–0.05
1000	1D4Ah	999.87	–0.01	0EA4h	999.73	–0.03	0751h	999.47	–0.05
2000	3A96h	1999.87	–0.01	1D4Ah	1999.73	–0.01	0EA4h	1999.47	–0.03
5000	927Bh	5000.00	0.00	493Dh	5000.00	0.00	249Eh	5000.00	0.00
10000	—	—	—	—	—	—	493Dh	10000.00	0.00
20000	—	—	—	—	—	—	927Bh	20000.00	0.00
50000	—	—	—	—	—	—	—	—	—

Division ratio	Divided by 16			Divided by 32		
Target period (ms)	Set Value	Actual period (ms	Error (%)	Set Value	Actual period (ms	Error (%)
1	—	—	—	—	—	—
2	0001h	2.13	6.67	—	—	—
5	0004h	5.33	6.67	0001h	4.27	–14.67
10	0008h	9.60	–4.00	0004h	10.67	6.67
20	0011h	19.20	–4.00	0008h	19.20	–4.00
50	002Dh	49.07	–1.87	0016h	49.07	–1.87
100	005Ch	99.20	–0.80	002Dh	98.13	–1.87
200	00BAh	199.47	–0.27	005Ch	198.40	–0.80
500	01D3h	499.20	–0.16	00E9h	499.20	–0.16
1000	03A8h	999.47	–0.05	01D3h	998.40	–0.16
2000	0751h	1998.93	–0.05	03A8h	1998.93	–0.05
5000	124Eh	4999.47	–0.01	0926h	4998.40	–0.03
10000	249Eh	10000.00	0.00	124Eh	9998.93	–0.01
20000	493Dh	20000.00	0.00	249Eh	20000.00	0.00
50000	B71Ah	50000.00	0.00	5B8Ch	49998.93	0.00

26.2.5 Low-Power Timer Compare Register 0 (LPCMR0)

Address(es): LPT.LPCMR0 0008 00B8h

	b15	b14	b13	b12	b11	b10	b9	b8	b7	b6	b5	b4	b3	b2	b1	b0
	LPCMR0[15:0]															
Value after reset:	1	1	1	1	1	1	1	1	1	1	1	1	1	1	1	1

Bit	Symbol	Bit Name	Description	R/W
b15 to b0	LPCMR0[15:0]	Low-Power Timer Compare 0	Set the value of compare match 0 for comparison with the low-power timer counter.	R/W

Note: Set the PRCR.PRC2 bit to 1 (write enabled) before rewriting this register.
Note: Rewrite this register while the LPTCR3.LPCNTEN bit is 0 (low-power timer counter stops).

The LPCMR0 register is used to set the value of compare match 0 for comparison with the low-power timer counter. Set the LPCMR0 register to a value smaller than or equal to the value of the LPTPRD register.

26.2.6 Low-Power Timer Standby Wakeup Enable Register (LPWUCR)

Address(es): LPT.LPWUCR 0008 00BCh

	b15	b14	b13	b12	b11	b10	b9	b8	b7	b6	b5	b4	b3	b2	b1	b0
	LPWKUPEN	—	—	—	—	—	—	—	—	—	—	—	—	—	—	—
Value after reset:	0	0	0	0	0	0	0	0	0	0	0	0	0	0	0	0

Bit	Symbol	Bit Name	Description	R/W
b14 to b0	—	Reserved	These bits are read as 0. The write value should be 0.	R/W
b15	LPWKUPEN	Low-Power Timer Standby Wakeup Enable*1	0: Wakeup from software standby mode using low-power timer is disabled 1: Wakeup from software standby mode using low-power timer is enabled	R/W

Note: Set the PRCR.PRC2 bit to 1 (write enabled) before rewriting this register.
Note 1. Rewrite this bit while the LPTCR3.LPCNTEN bit is 0 (low-power timer counter stops).

The LPWUCR register is used to enable the function that allows to return from software standby mode to normal operating mode when compare match 0 occurs in the low-power timer.

LPWKUPEN Bit (Low-Power Timer Standby Wakeup Enable)

This bit enables or disables the function that allows to return from software standby mode to normal operating mode when compare match 0 occurs in the low-power timer.

26.3 Operation

26.3.1 Periodic Counting Operation

The low-power timer is a 16-bit up-counter that operates regardless of the MCU operating mode*1.
When the LPTCR3.LPCNTEN bit is set to 1 (low-power timer counter operates) after setting the LPTCR1.LPCNTPSSEL[2:0] bits to select the division ratio, the LPTCR1.LPCNTCKSEL bit to set the clock source, and the LPTCR2.LPCNTSTP bit to 0 (clock is supplied to the low-power timer), the low-power timer counter starts counting with IWDTCLK.
When the value of the low-power timer counter matches the value of the LPTPRD register, the counter restarts counting from 0000h.
When the value of the low-power timer counter matches the value of the LPCMR0 register in software standby mode while the LPTCR1.LPCMRE0 bit is set to 1 (Compare match 0 is enabled) and the LPWUCR.LPWKUPEN bit is set to 1 (wakeup from software standby mode using low-power timer is enabled), the MCU returns from software standby mode to normal operating mode by the function of the event link controller (ELC).
Figure 26.2 shows operation of the low-power timer and Figure 26.3 shows an example of procedure for the initial settings.

Note 1. The counter stops because the IWDTCLK stops in the low-power consumption mode under the following settings:
The OFS0.IWDTSLCSTP bit is set to 1 (counting stop is enabled) while IWDT is activated in auto-start mode, or the IWDTCSTPR.SLCSTP bit is set to 1 (counting stop is enabled) while IWDT is activated in register start mode.

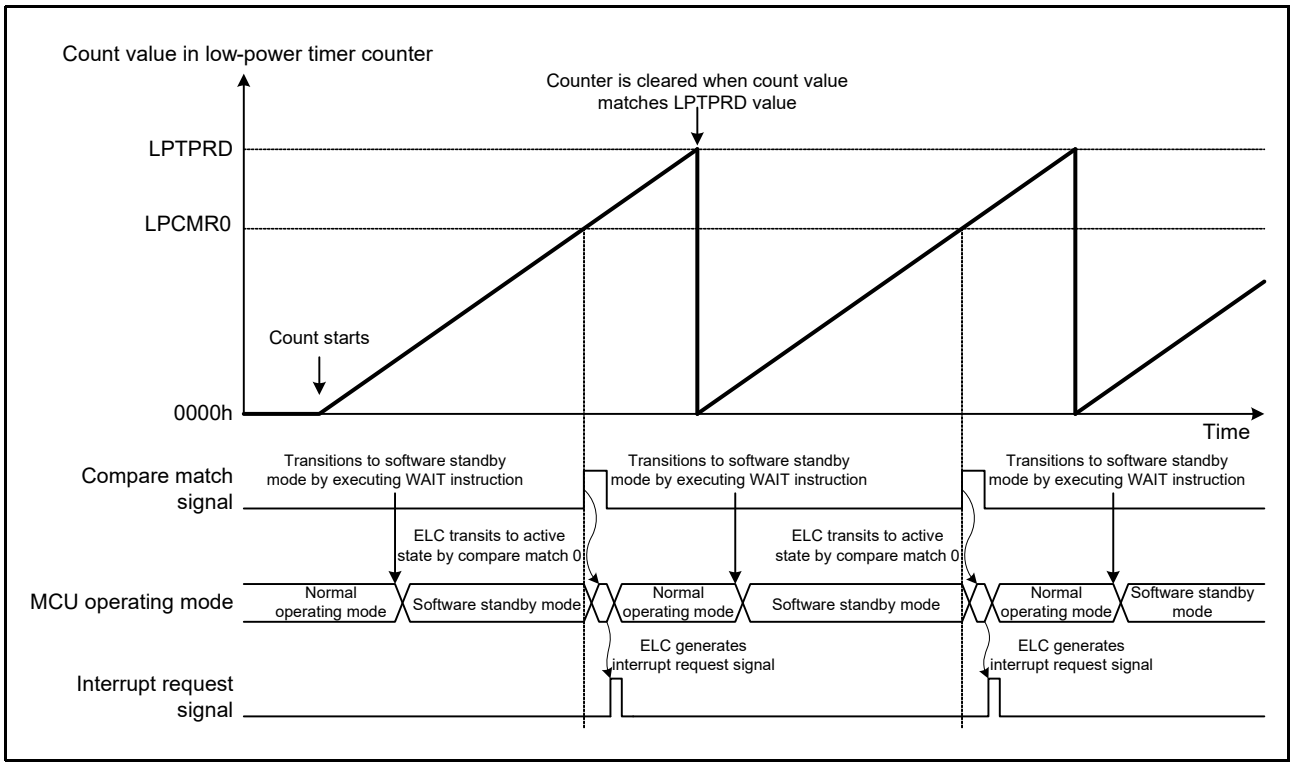

Figure 26.2 Operation of Low-Power Timer

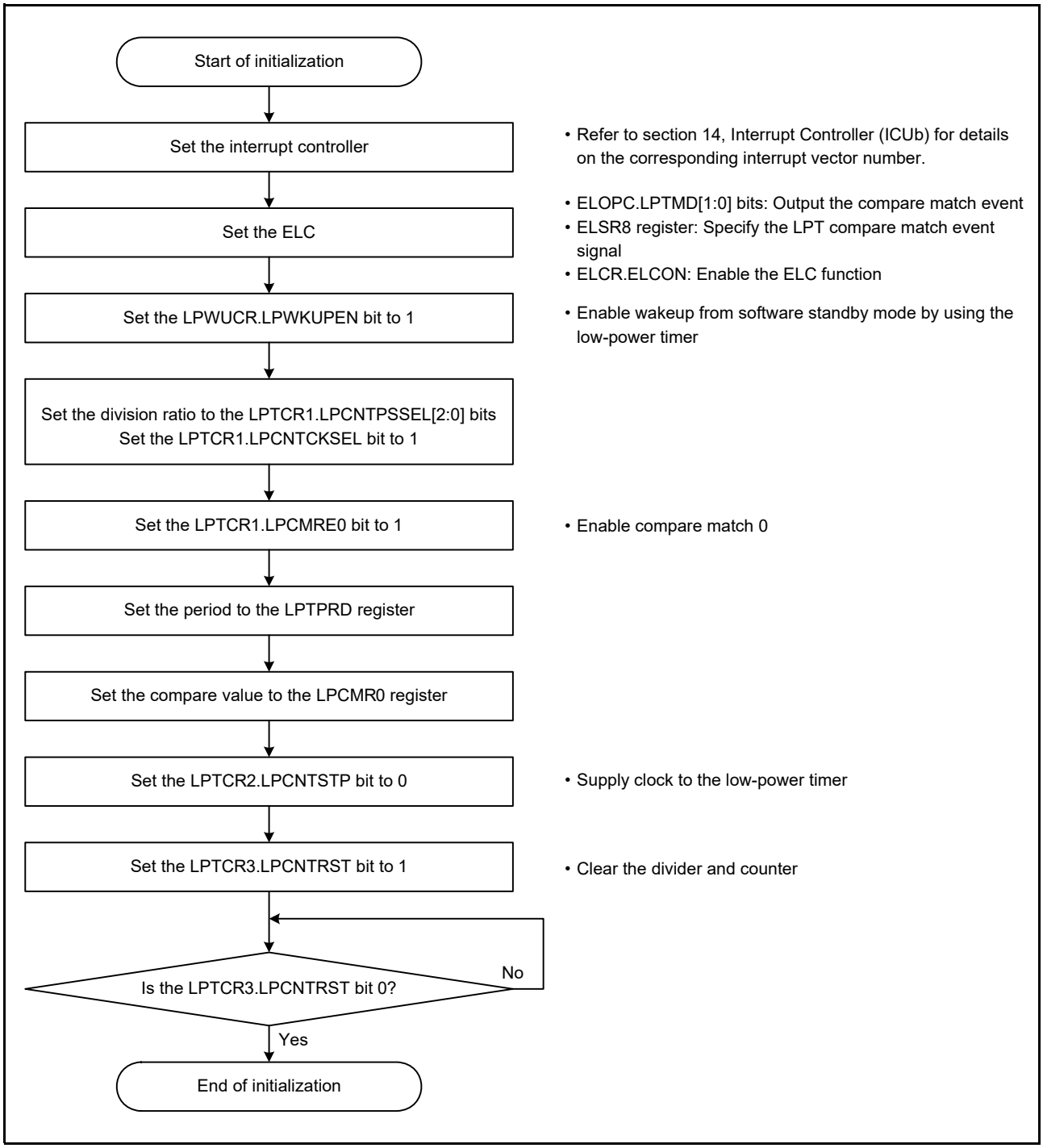

Figure 26.3 Example of Initial Settings

26.3.2 Count Timing of Low-Power Timer Counter

The LPTCR1.LPCNTPSSEL[2:0] bits are used to select the counter clock to be input to the low-power timer counter from among five clocks derived from dividing IWDTCLK by 2 to 32, respectively.
Figure 26.4 shows the count timing of the low-power timer counter in this case.

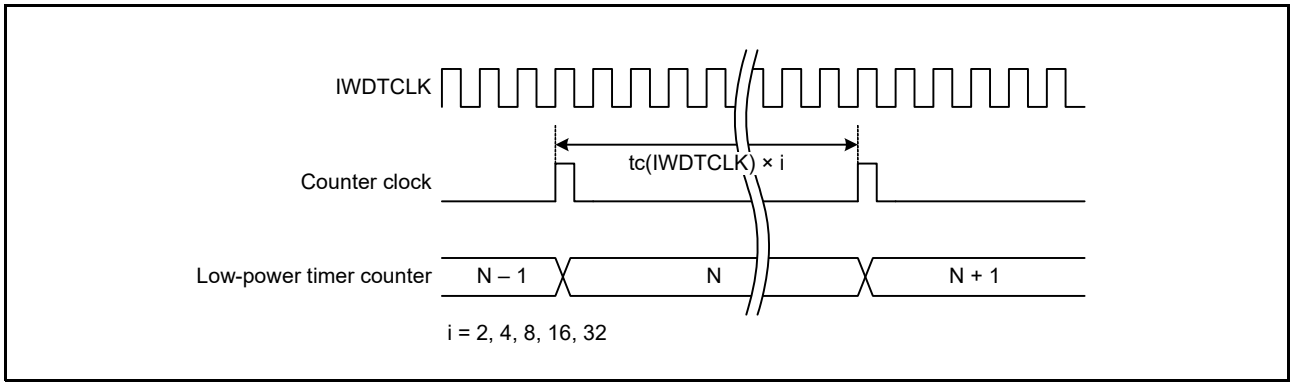

Figure 26.4 Count Timing of Low-Power Timer Counter

26.3.3 Clearing Timing of Low-Power Timer Counter

Writing 1 to the LPTCR3.LPCNTRST bit*1 clears the low-power timer counter.
This bit automatically becomes 0 when the clearing of the counter is completed.
Figure 26.5 shows the clearing timing of the low-power timer counter in this case.

Note 1. Write to the LPTCR3.LPCNTRST bit while the LPTCR3.LPCNTEN bit is 0 (low-power timer counter stops).

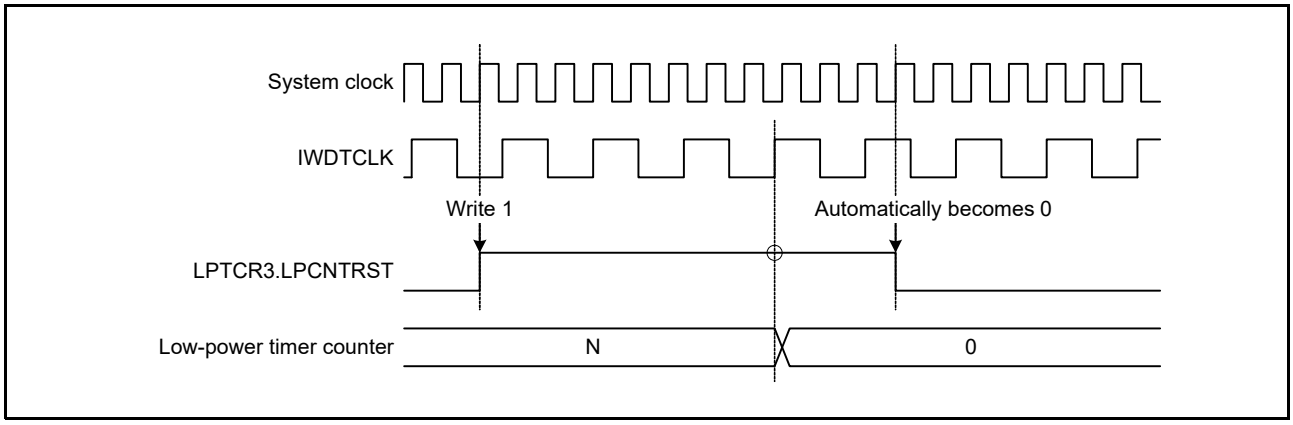

Figure 26.5 Clearing Timing of Low-Power Timer Counter

26.4 Wakeup from Software Standby Mode by an Interrupt through the Event Link Controller (ELC)

The low-power timer generates an event signal upon compare match 0 to the event link controller (ELC) only in software standby mode.
Setting the ELOPC.LPTMD[1:0] bits to 00b (output the compare match 0 event to ICU as an interrupt request) and the ELSR8 register to 32h (LPT compare match 0) leads to the generation of an interrupt from the event signal, and the MCU returns from software standby mode to normal operating mode.

26.5 Usage Notes

26.5.1 Notes on Transition to Software Standby Mode

When the MCU is to re-enter to software standby mode after returning from software standby mode to normal operating mode, wait for at least one cycle of IWDTCLK before executing the WAIT instruction.

27. Independent Watchdog Timer (IWDTa)

The independent watchdog timer (IWDT) can be used to detect programs being out of control.
The user can detect when a program runs out of control if an underflow occurs, by creating a program that refreshes the IWDT counter before it underflows.
The functions of the IWDT are different from those of the WDT in the following respects.

- The divided IWDT-dedicated clock (IWDTCLK) is used as the count source (not affected by the peripheral module clock).
- The IWDTCSTPR.SLCSTP bit or the OFS0.IWDTSLCSTP bit can be used to select not to stop the counter in low power consumption mode.

27.1 Overview

Table 27.1 lists the specifications of the IWDT.

Table 27.1 IWDT Specifications

Item	Description
Count source*1	IWDT-dedicated clock (IWDTCLK)
Clock divide ratio	Divide by 1, 16, 32, 64, 128, or 256
Counter operation	Counting down using a 14-bit counter
Conditions for starting the counter	• Auto-start mode: Counting automatically starts after a reset is released • Register start mode: Counting is started by refresh operation (writing 00h and then FFh to the IWDTRR register).
Conditions for stopping the counter	• Reset • In low power consumption modes (depends on the register setting*2) • A counter underflows or a refresh error occurs (only in register start mode)
Window function	Window start and end positions can be specified (refresh-permitted and refresh-prohibited periods)
Reset output sources	• Counter underflows • Refreshing outside the refresh-permitted period (refresh error)
Non-maskable interrupt sources	• Counter underflows • Refreshing outside the refresh-permitted period (refresh error)
Reading the counter value	The counter value can be read by the IWDTSR register.
Event link function (output)	• Counter underflow event output • Refresh error event output
Auto-start mode (controlled by option function select register 0 (OFS0))	• Selecting the clock frequency divide ratio after a reset (OFS0.IWDTCKS[3:0] bits) • Selecting the timeout period of the independent watchdog timer (OFS0.IWDTTOPS[1:0] bits) • Selecting the window start position in the independent watchdog timer (OFS0.IWDTRPSS[1:0] bits) • Selecting the window end position in the independent watchdog timer (OFS0.IWDTRPES[1:0] bits) • Selecting the reset output or interrupt request output (OFS0.IWDTRSTIRQS bit) • Selecting the counter operation/stop in low power consumption mode (OFS0.IWDTSLCSTP bit)
Register start mode (controlled by the IWDT registers)	• Selecting the clock frequency divide ratio after refreshing (IWDTCR.CKS[3:0] bits) • Selecting the timeout period of the independent watchdog timer (IWDTCR.TOPS[1:0] bits) • Selecting the window start position in the independent watchdog timer (IWDTCR.RPSS[1:0] bits) • Selecting the window end position in the independent watchdog timer (IWDTCR.RPES[1:0] bits) • Selecting the reset output or interrupt request output (IWDTRCR.RSTIRQS bit) • Selecting the counter operation/stop in low power consumption mode (IWDTCSTPR.SLCSTP bit)

Note 1. Satisfy the frequency of the peripheral module clock (PCLKB) ≥ 4 × (the frequency of the count source after divide).
Note 2. When the OFS0.IWDTSLCSTP bit is 1 in auto-start mode, and when the IWDTCSTPR.SLCSTP bit is 1 in register start mode.

Figure 27.1 is a block diagram of the IWDT.

In IWDT, the bus interface and registers operate with the peripheral module clock (PCLKB), while the 14-bit down-counter and control circuits operate with IWDTCLK.

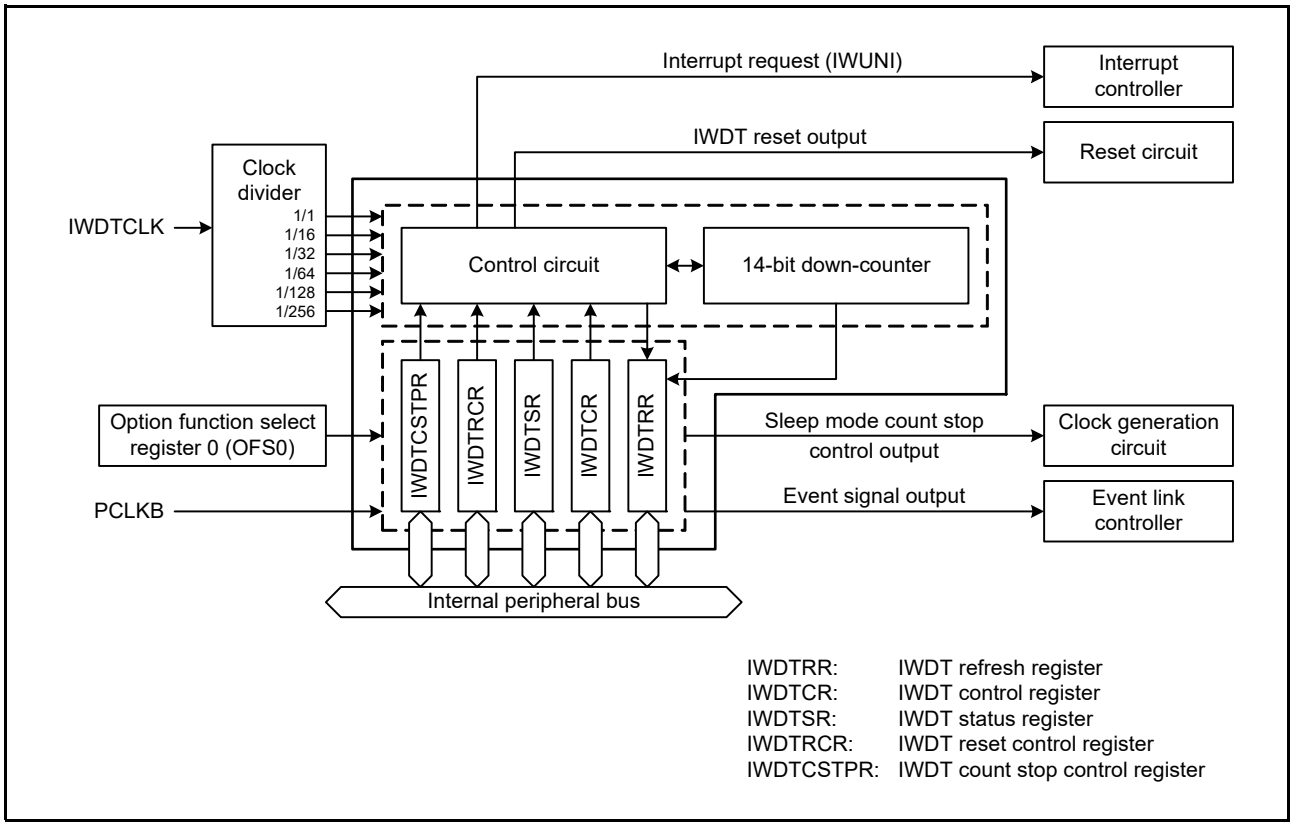

Figure 27.1 IWDT Block Diagram

27.2 Register Descriptions

27.2.1 IWDT Refresh Register (IWDTRR)

Address(es): IWDT.IWDTRR 0008 8030h

	b7	b6	b5	b4	b3	b2	b1	b0
Value after reset:	1	1	1	1	1	1	1	1

Bit	Description	R/W
b7 to b0	The counter is refreshed by writing 00h and then writing FFh to this register.	R/W

The IWDTRR register is used to refresh the counter of the IWDT.
The counter of the IWDT is refreshed by writing 00h and then writing FFh to the IWDTRR register (refresh operation) within the refresh-permitted period.
After the counter has been refreshed, it starts counting down from the value selected by the IWDTTOPS[1:0] bits in option function select register 0 (OFS0) in auto-start mode. In register start mode, counting down starts from the value selected by setting the IWDTCR.TOPS[1:0] bits in the first refresh operation after a reset is released.
When 00h is written, the read value is 00h. When a value other than 00h is written, the read value is FFh.
For details of the refresh operation, refer to section 27.3.2, Refresh Operation.

27.2.2 IWDT Control Register (IWDTCR)

Address(es): IWDT.IWDTCR 0008 8032h

	b15	b14	b13	b12	b11	b10	b9	b8	b7	b6	b5	b4	b3	b2	b1	b0
	—	—	RPSS[1:0]		—	—	RPES[1:0]		CKS[3:0]				—	—	TOPS[1:0]	
Value after reset:	0	0	1	1	0	0	1	1	1	1	1	1	0	0	1	1

Bit	Symbol	Bit Name	Description	R/W
b1, b0	TOPS[1:0]	Timeout Period Select	b1 b0 0 0: 128 cycles (007Fh) 0 1: 512 cycles (01FFh) 1 0: 1024 cycles (03FFh) 1 1: 2048 cycles (07FFh)	R/W
b3, b2	—	Reserved	These bits are read as 0. Writing to these bits has no effect.	R
b7 to b4	CKS[3:0]	Clock Divide Ratio Select	b7 b4 0 0 0 0: No division 0 0 1 0: Divide-by-16 0 0 1 1: Divide-by-32 0 1 0 0: Divide-by-64 1 1 1 1: Divide-by-128 0 1 0 1: Divide-by-256 Settings other than above are prohibited.	R/W
b9, b8	RPES[1:0]	Window End Position Select	b9 b8 0 0: 75% 0 1: 50% 1 0: 25% 1 1: 0% (window end position is not specified.)	R/W
b11, b10	—	Reserved	These bits are read as 0. Writing to these bits has no effect.	R
b13, b12	RPSS[1:0]	Window Start Position Select	b13 b12 0 0: 25% 0 1: 50% 1 0: 75% 1 1: 100% (window start position is not specified.)	R/W
b15, b14	—	Reserved	These bits are read as 0. Writing to these bits has no effect.	R

Note: This register can be written only once after a reset, and cannot be written after the counter starts counting.

This register is used to specify the time until a timeout occurs and the refresh-permitted period when using register start mode.

In auto-start mode, the settings in the IWDTCR register are disabled, and the settings in option function select register 0 (OFS0) are enabled. The bit setting made to the IWDTCR register can also be made in the OFS0 register. For details, refer to section 27.3.7, Correspondence between Option Function Select Register 0 (OFS0) and IWDT Registers.

TOPS[1:0] Bits (Timeout Period Select)

These bits select the timeout period (period until the counter underflows) from among 128, 512, 1024, or 2048 cycles, taking the divided clock specified by the CKS[3:0] bits as one cycle.
After the counter is refreshed, the combination of the CKS[3:0] and TOPS[1:0] bits determines the time (number of IWDTCLK cycles) until the counter underflows.
Relations between the CKS[3:0] and TOPS[1:0] bit setting, the timeout period, and the number of IWDTCLK cycles are listed in Table 27.2.

Table 27.2 Settings and Timeout Periods

CKS[3:0] Bits				TOPS[1:0] Bits		Clock Divide Ratio	Timeout Period (Number of Cycles)	Cycles of IWDTCLK
b7	b6	b5	b4	b1	b0			
0	0	0	0	0	0	No division	128	128
				0	1		512	512
				1	0		1024	1024
				1	1		2048	2048
0	0	1	0	0	0	Divide-by-16	128	2048
				0	1		512	8192
				1	0		1024	16384
				1	1		2048	32768
0	0	1	1	0	0	Divide-by-32	128	4096
				0	1		512	16384
				1	0		1024	32768
				1	1		2048	65536
0	1	0	0	0	0	Divide-by-64	128	8192
				0	1		512	32768
				1	0		1024	65536
				1	1		2048	131072
1	1	1	1	0	0	Divide-by-128	128	16384
				0	1		512	65536
				1	0		1024	131072
				1	1		2048	262144
0	1	0	1	0	0	Divide-by-256	128	32768
				0	1		512	131072
				1	0		1024	262144
				1	1		2048	524288

CKS[3:0] Bits (Clock Divide Ratio Select)

These bits select the IWDTCLK divide ratio from among divide-by 1, 16, 32, 64, 128, and 256. Combination with the TOPS[1:0] bit setting, a count period between 128 and 524288 cycles of the IWDTCLK can be selected for the IWDT.

RPES[1:0] Bits (Window End Position Select)

These bits select 75%, 50%, 25% or 0% of the count period for the window end position of the counter. The window end position should be a value smaller than the window start position (window start position > window end position). If the window end position is greater than the window start position, only the window start position setting is enabled.
The counter values for the window start and end positions selected by setting the RPSS[1:0] and RPES[1:0] bits change depending on the TOPS[1:0] bit setting.
Table 27.3 lists the counter values for the window start and end positions corresponding to TOPS[1:0] bit values.

Table 27.3 Relationship between Timeout Period and Window Start and End Counter Values

TOPS[1:0] Bits		Timeout Period		Window Start and End Counter Value			
b1	b0	Cycles	Counter Value	100%	75%	50%	25%
0	0	128	007Fh	007Fh	005Fh	003Fh	001Fh
0	1	512	01FFh	01FFh	017Fh	00FFh	007Fh
1	0	1024	03FFh	03FFh	02FFh	01FFh	00FFh
1	1	2048	07FFh	07FFh	05FFh	03FFh	01FFh

RPSS[1:0] Bits (Window Start Position Select)

These bits select a counter window start position from 100%, 75%, 50%, or 25% of the count period (100% when the count starts and 0% when the counter underflows). The interval between the window start position and window end position is the refresh-permitted period and the other periods are refresh-prohibited periods.
Figure 27.2 shows the relationship between of the RPSS[1:0] and RPES[1:0] bit setting and the refresh-permitted and refresh-prohibited periods.

RPSS[1:0] Bits		RPES[1:0] Bits		Window	
b13	b12	b9	b8	Start (%)	End (%)
1	1	1	1	100	0
		1	0		25
		0	1		50
		0	0		75
1	0	1	1	75	0
		1	0		25
		0	1		50
		0	0		75
0	1	1	1	50	0
		1	0		25
		0	1		50
		0	0		75
0	0	1	1	25	0
		1	0		25
		0	1		50
		0	0		75

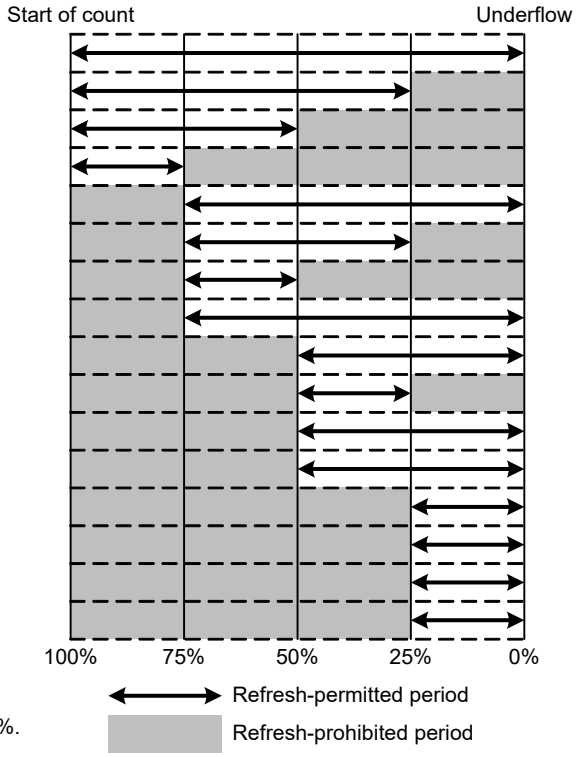

Note. If the window end setting is greater than or equal to the window start setting, the window end position is set to 0%.

Figure 27.2 RPSS[1:0] and RPES[1:0] Bit Settings and the Refresh-Permitted Period

27.2.3 IWDT Status Register (IWDTSR)

Address(es): IWDT.IWDTSR 0008 8034h

	b15	b14	b13	b12	b11	b10	b9	b8	b7	b6	b5	b4	b3	b2	b1	b0
	REFEF	UNDFF	CNTVAL[13:0]													
Value after reset:	0	0	0	0	0	0	0	0	0	0	0	0	0	0	0	0

Bit	Symbol	Bit Name	Description	R/W
b13 to b0	CNTVAL[13:0]	Counter Value	Value counted by the counter	R
b14	UNDFF	Underflow Flag	0: No underflow occurred 1: Underflow occurred	R/(W) *1
b15	REFEF	Refresh Error Flag	0: No refresh error occurred 1: Refresh error occurred	R/(W) *1

Note 1. Only 0 can be written to clear the flag.

CNTVAL[13:0] Bits (Counter Value)

These bits are used to confirm the value of the counter, but note that the read value may differ from the actual count by a value of one count.

UNDFF Flag (Underflow Flag)

This flag is used to confirm whether or not an underflow has occurred in the counter.
The value 1 indicates that the counter has underflowed. The value 0 indicates that the counter has not underflowed.
Write 0 to the UNDFF flag to set the value to 0. Writing 1 has no effect.

REFEF Flag (Refresh Error Flag)

This flag is used to confirm whether or not a refresh error (performing a refresh operation during a refresh-prohibited period) has occurred.
The value 1 indicates that a refresh error has occurred. The value 0 indicates that no refresh error has occurred.
Write 0 to the REFEF flag to set the value to 0. Writing 1 has no effect.

27.2.4 IWDT Reset Control Register (IWDTRCR)

Address(es): IWDT.IWDTRCR 0008 8036h

	b7	b6	b5	b4	b3	b2	b1	b0
	RSTIRQS	—	—	—	—	—	—	—
Value after reset:	1	0	0	0	0	0	0	0

Bit	Symbol	Bit Name	Description	R/W
b6 to b0	—	Reserved	These bits are read as 0. Writing to these bits has no effect.	R
b7	RSTIRQS	Reset Interrupt Request Select	0: Non-maskable interrupt request is output. 1: Reset signal is output.	R/W

Note: This register can be written only once after a reset, and cannot be written after the counter starts counting.

This register is used to specify the behavior when a timeout or refresh error occurs when using register start mode. In auto-start mode, the IWDTRCR register setting is disabled, and the settings in option function select register 0 (OFS0) are enabled. The bit setting made to the IWDTRCR register can also be made in the OFS0 register. For details, refer to section 27.3.7, Correspondence between Option Function Select Register 0 (OFS0) and IWDT Registers.

27.2.5 IWDT Count Stop Control Register (IWDTCSTPR)

Address(es): IWDT.IWDTCSTPR 0008 8038h

	b7	b6	b5	b4	b3	b2	b1	b0
	SLCSTP	—	—	—	—	—	—	—
Value after reset:	1	0	0	0	0	0	0	0

Bit	Symbol	Bit Name	Description	R/W
b6 to b0	—	Reserved	These bits are read as 0. Writing to these bits has no effect.	R
b7	SLCSTP	Sleep Mode Count Stop Control	0: Counter continues counting even in low power consumption mode.*1 1: Counter stops in low power consumption mode.	R/W

Note: This register can be written only once after a reset, and cannot be written after the counter starts counting.
Note 1. The counter continues counting in sleep mode, deep sleep mode, or software standby mode.

This register is used to specify whether the counter operates in low power consumption mode when using register start mode.
In auto-start mode, the IWDTCSTPR register setting is disabled, and the settings in option function select register 0 (OFS0) are enabled. The bit setting mode to the IWDTCSTPR register can also be made in the OFS0 register. For details, refer to section 27.3.7, Correspondence between Option Function Select Register 0 (OFS0) and IWDT Registers.

SLCSTP Bit (Sleep Mode Count Stop Control)

This bit selects whether the counter continues or stops counting in low power consumption mode.

27.2.6 Option Function Select Register 0 (OFS0)

For option function select register 0 (OFS0), refer to section 27.3.7, Correspondence between Option Function Select Register 0 (OFS0) and IWDT Registers.

27.3 Operation

27.3.1 Count Operation in Each Start Mode

Select the IWDT start mode by setting the IWDTSTRT bit in option function select register 0 (OFS0).
When the OFS0.IWDTSTRT bit is 1 (register start mode), the IWDTCR, IWDTRCR, and IWDTCSTPR registers are enabled, and counting is started by refresh operation (writing) to the IWDTRR register. When the OFS0.IWDTSTRT bit is 0 (auto-start mode), the setting of the OFS0 register is enabled, and counting automatically starts after reset.

27.3.1.1 Register Start Mode

When the OFS0.IWDTSTRT bit in option function select register 0 is 1, register start mode is selected, and the IWDTCR, IWDTRCR, and IWDTCSTPR registers are enabled.
After a reset is released, set the clock divide ratio, window start and end positions, and timeout period in the IWDTCR register, the reset output or interrupt request output in the IWDTRCR register, and counter operation/stop in low power consumption mode in the IWDTCSTPR register. Then, refresh the counter to start counting down from the value selected by setting the IWDTCR.TOPS[1:0] bits.
Thereafter, as long as the program continues normal operation and the counter is refreshed in the refresh-permitted period, the value in the counter is re-set each time the counter is refreshed and counting down continues. The IWDT does not output the reset signal as long as this continues. However, if the counter underflows because the counter cannot be refreshed due to a program runaway, or if a refresh error occurs because the counter was refreshed outside the refresh-permitted period, the IWDT outputs a reset signal or an interrupt request (IWUNI). Set the IWDTRCR.RSTIRQS bit to select either reset signal output or interrupt request output.

Figure 27.3 shows an example of operation under the following conditions.

- Register start mode (OFS0.IWDTSTRT = 1)
- Reset output is enabled (IWDTRCR.RSTIRQS = 1)
- The window start position is 75% (IWDTCR.RPSS[1:0] = 10b)
- The window end position is 25% (IWDTCR.RPES[1:0] = 10b)

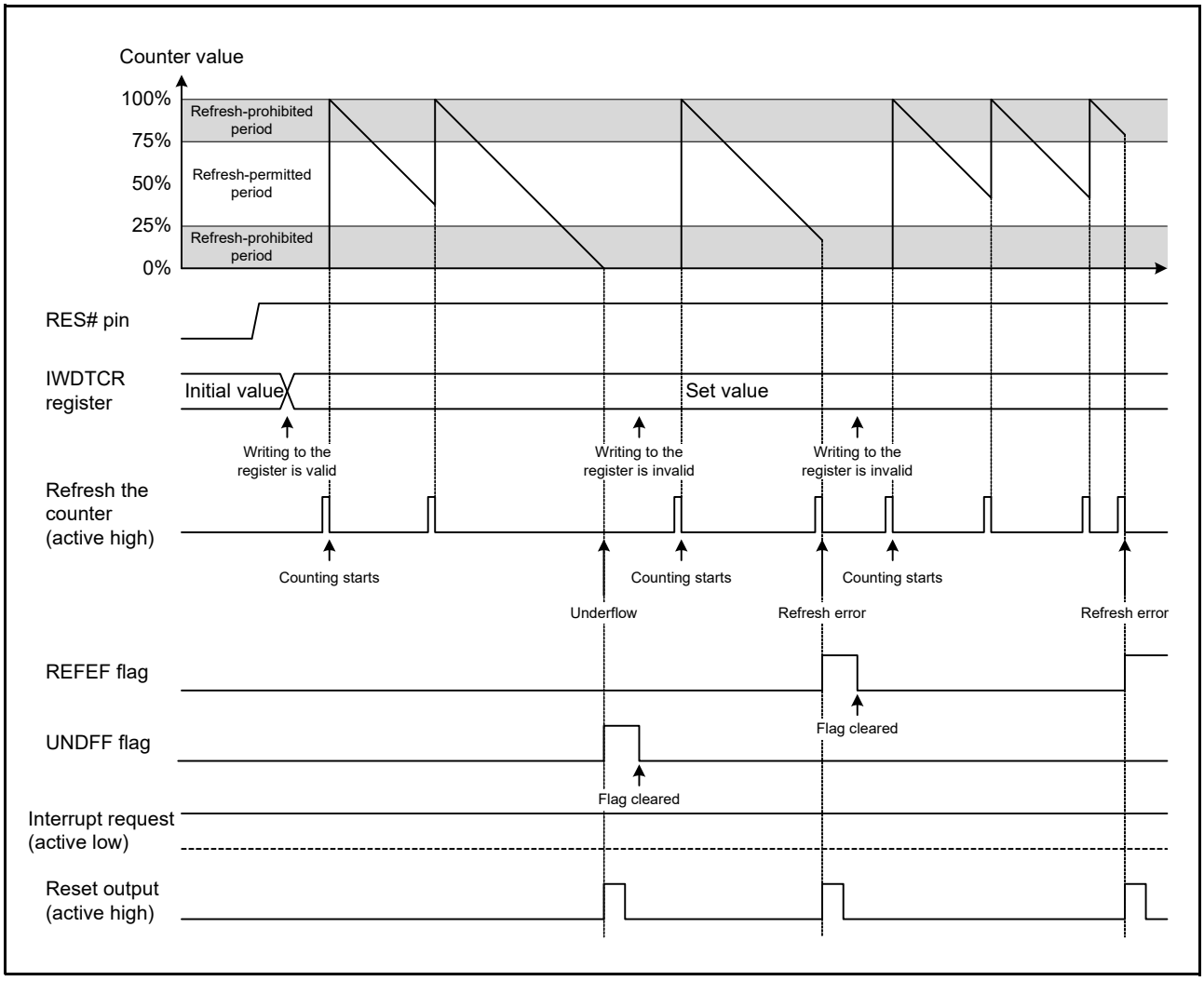

Figure 27.3 Operation Example in Register Start Mode

27.3.1.2 Auto-Start Mode

When the IWDTSTRT bit in option function select register 0 (OFS0) is 0, auto-start mode is selected, and the IWDTCR, IWDTRCR, and IWDTCSTPR registers are disabled.
During the reset state, the clock divide ratio, window start and end positions, timeout period, reset output or interrupt request output, and counter operation/stop in low power consumption mode are set using the values specified in the OFS0 register. When the reset is released, the counter automatically starts counting down from the value selected by the OFS0.IWDTTOPS[1:0] bits.
After that, as long as the program continues normal operation and the counter is refreshed in the refresh-permitted period, the value in the counter is re-set each time the counter is refreshed and counting down continues. The IWDT does not output the reset signal as long as this continues. However, if the counter underflows because refreshing of the counter is not possible due to the program having entered crashed execution or if a refresh error occurs due to refreshing outside the refresh-permitted period, the IWDT outputs the reset signal or an interrupt request (IWUNI). After the reset signal or interrupt request (IWUNI) is generated, the counter reloads the timeout period after counting for one cycle, and restarts counting. Set the OFS0.IWDTRSTIRQS bit to select either reset signal output or interrupt request output.

Figure 27.4 shows an example of operation under the following conditions.

- Auto-start mode (OFS0.IWDTSTRT = 0)
- Interrupt request output is enabled (OFS0.IWDTRSTIRQS = 0)
- The window start position is 75% (OFS0.IWDTRPSS[1:0] = 10b)
- The window end position is 25% (OFS0.IWDTRPES[1:0] = 10b)

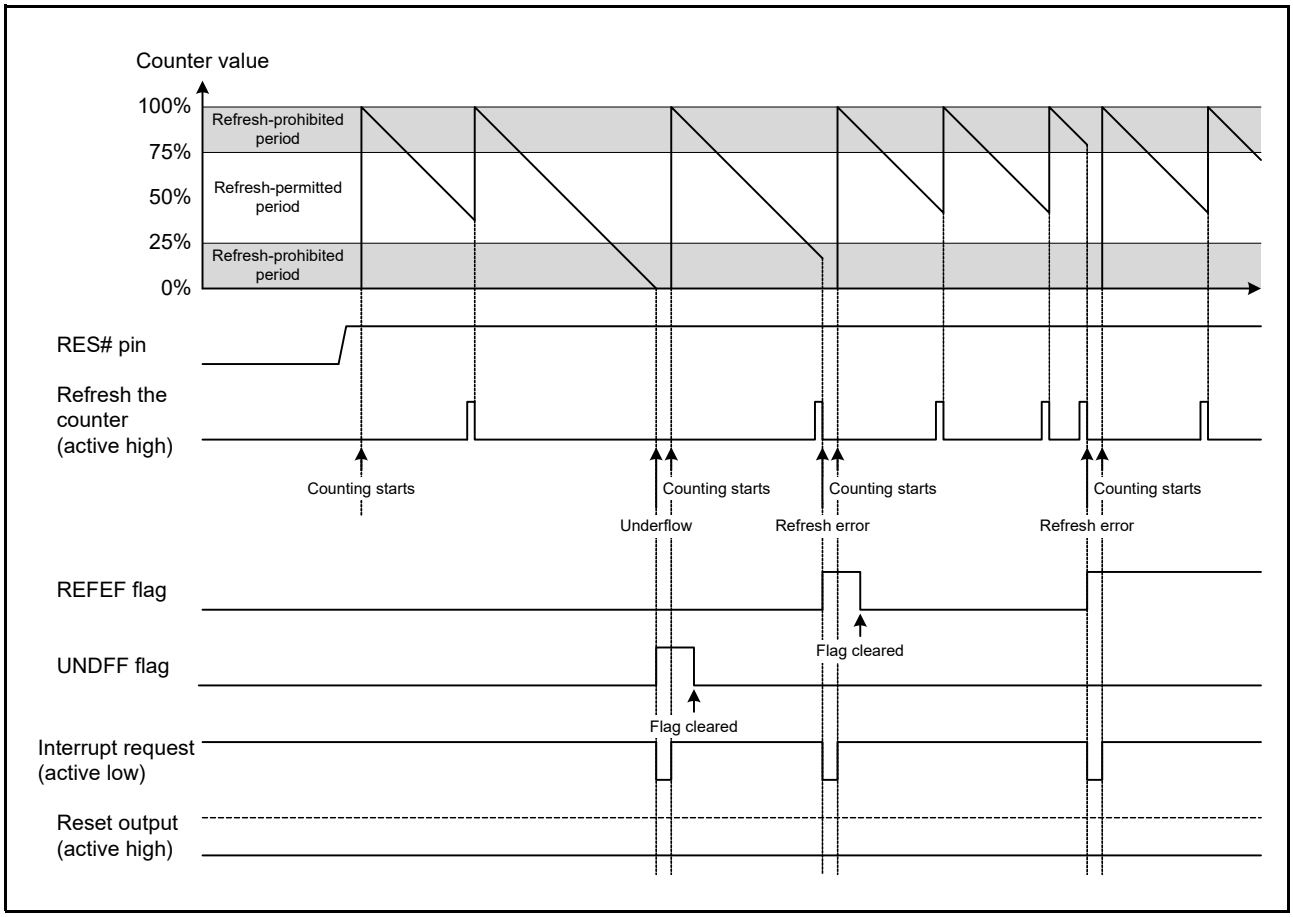

Figure 27.4 Operation Example in Auto-Start Mode

27.3.2 Refresh Operation

The counter is refreshed and starts operation (counting is started by refreshing) by writing the values 00h and then FFh to the IWDTRR register. If a value other than FFh is written after 00h, the counter is not refreshed. After such invalid writing, correct refreshing is performed by again writing 00h and then FFh to the IWDTRR register.
When writing is done in the order of 00h (first time) → 00h (second time), and if FFh is written after that, the writing order 00h → FFh is satisfied; writing 00h (n–1-th time) → 00h (nth time) → FFh is valid and correct refreshing will be done. Even when the first value written before 00h is not 00h, correct refreshing will be done if the operation contains the set of writing 00h → FFh. Moreover, even if a register other than the IWDTRR register is accessed or the IWDTRR register is read between writing 00h and writing FFh to the IWDTRR register, correct refreshing will be done.

[Sample sequences of writing that are valid for refreshing the counter]

- 00h → FFh
- 00h (n–1-th time) → 00h (nth time) → FFh
- 00h → access to another register or read from the IWDTRR register → FFh

[Sample sequences of writing that are not valid for refreshing the counter]

- 23h (a value other than 00h) → FFh
- 00h → 54h (a value other than FFh)
- 00h → AAh (00h and a value other than FFh) → FFh

Even when 00h is written to the IWDTRR register outside the refresh-permitted period, if FFh is written to the IWDTRR register in the refresh-permitted period, the writing sequence is valid and refreshing will be done.
After FFh is written to the IWDTRR register, refreshing the counter requires up to four cycles of the signal for counting (the IWDTCR.CKS[3:0] bits determine how many cycles of the IWDTCLK make up one cycle for counting). Therefore, writing FFh to the IWDTRR register should be completed four-count cycles before the end position of the refresh-permitted period or a counter underflow. The value of the counter can be checked by the IWDTSR.CNTVAL[13:0] bits.

[Sample refreshing timings]

- When the window start position is set to 01FFh, even if 00h is written to the IWDTRR register before 01FFh is reached (0202h, for example), refreshing is done if FFh is written to the IWDTRR register after the value of the IWDTSR.CNTVAL[13:0] bits has reached 01FFh.
- When the window end position is set to 01FFh, refreshing is done if 0203h (four-count cycles before 01FFh) or a greater value is read from the IWDTSR.CNTVAL[13:0] bits immediately after writing 00h → FFh to the IWDTRR register.
- When the refresh-permitted period continues until count 0000h, refreshing can be done immediately before an underflow. In this case, if 0003h (four-count cycles before an underflow) or a greater value is read from the IWDTSR.CNTVAL[13:0] bits immediately after writing 00h → FFh to the IWDTRR register, no underflow occurs and refreshing is done.

Figure 27.5 shows the IWDT refresh operation waveforms when PCLKB > IWDTCLK and the count clock is IWDTCLK/1.

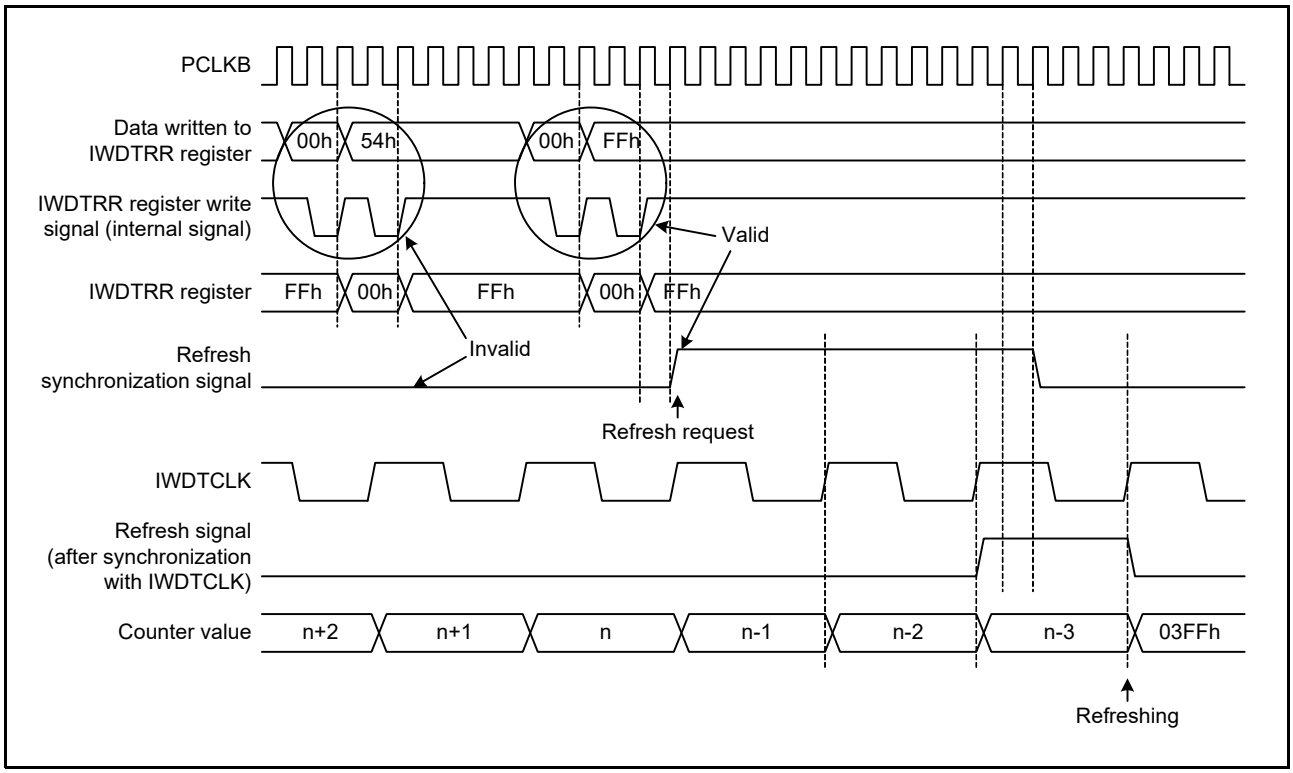

Figure 27.5 IWDT Refresh Operation Waveforms (IWDTCR.CKS[3:0] = 0000b, IWDTCR.TOPS[1:0] = 10b)

27.3.3 Status Flags

The IWDTSR.REFEF and IWDTSR.UNDFF flags retain the source of the reset signal output from the IWDT or the source of the interrupt request from the IWDT.
Thus, after release from the reset state or interrupt request generation, read the IWDTSR.REFEF and IWDTSR.UNDFF flags to check for the reset or interrupt source.
For each flag, writing 0 clears the bit and writing 1 has no effect.
Leaving the status flags unchanged does not affect operation. If the flags are not cleared, at the time of the next reset or interrupt request from the IWDT, the earlier reset or interrupt source is cleared and the new reset or interrupt source is written.
After 0 is written to each flag, up to three IWDTCLK cycles and two PCLKB cycles are required before the value is reflected.

27.3.4 Reset Output

When the IWDTRCR.RSTIRQS bit is set to 1 in register start mode or when the IWDTRSTIRQS bit in option function select register 0 (OFS0) is set to 1 in auto-start mode, a reset signal is output when an underflow in the counter or a refresh error occurs.
In register start mode, the counter is initialized (0000h) and stopped in that state after output of the reset signal. After the reset is released, the counter value is restored and down-counting is started by performing a refresh operation.
In auto-start mode, counting down automatically starts after the reset output.

27.3.5 Interrupt Sources

When the IWDTRCR.RSTIRQS bit is set to 0 in register start mode or when the OFS0.IWDTRSTIRQS bit is set to 0 in auto-start mode, an interrupt (IWUNI) signal is output when an underflow in the counter or a refresh error occurs. This interrupt can be used as a non-maskable interrupt. For details, refer to section 14, Interrupt Controller (ICUb).

Table 27.4 IWDT Interrupt Source

Name	Interrupt Source	DTC Activation	DMAC Activation
IWUNI	Counter underflow Refresh error	Not possible	Not possible

27.3.6 Reading the Counter Value

As the counter in IWDTCLK, the counter value cannot be read directly. The IWDT synchronizes the counter value with the PCLKB and stores it in the IWDTSR.CNTVAL[13:0] bits. Thus, the counter value can be checked indirectly through the IWDTSR.CNTVAL[13:0] bits.

Reading the counter value requires multiple PCLKB clock cycles (up to four clock cycles), and the read counter value may differ from the actual counter value by a value of one count.

Figure 27.6 shows the processing for reading the IWDT counter value when PCLKB > IWDTCLK and the count clock is IWDTCLK/1.

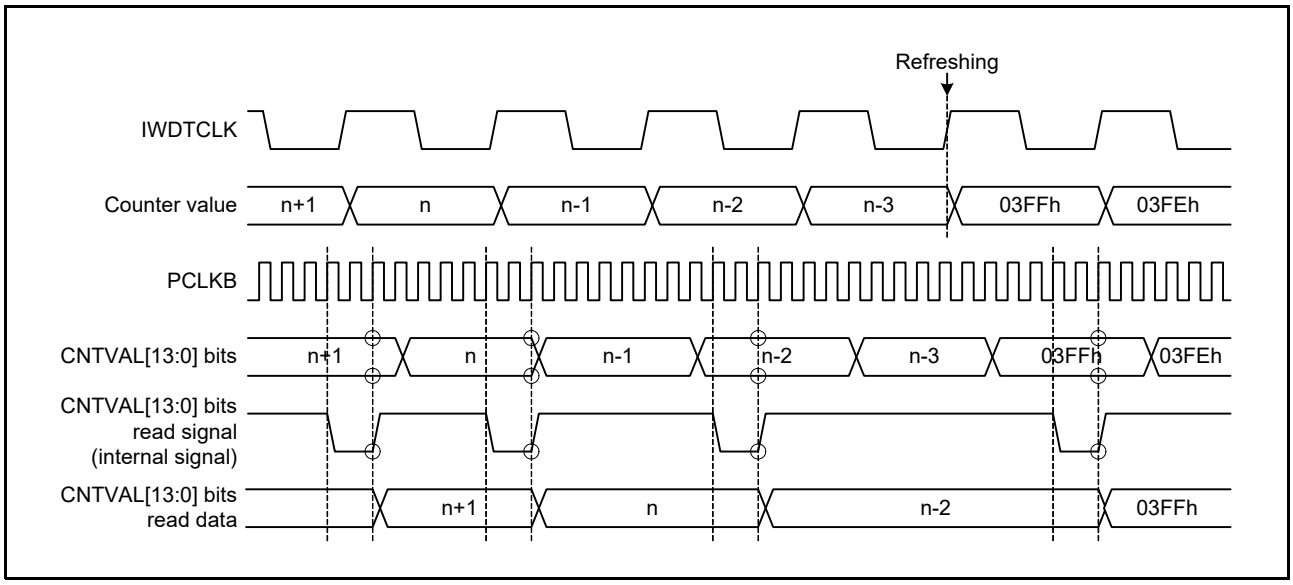

Figure 27.6 Processing for Reading IWDT Counter Value (IWDTCR.CKS[3:0] = 0000b, IWDTCR.TOPS[1:0] = 10b)

27.3.7 Correspondence between Option Function Select Register 0 (OFS0) and IWDT Registers

Table 27.5 lists the correspondence between option function select register 0 (OFS0) used in auto-start mode and the registers used in register start mode.
For details on the OFS0 register, refer to section 7.2.1, Option Function Select Register 0 (OFS0).

Table 27.5 Correspondence between Option Function Select Register 0 (OFS0) and IWDT Registers

Target of Control	Function	OFS0 Register (Enabled in Auto-Start Mode) OFS0.IWDTSTRT = 0	IWDT Registers (Enabled in Register Start Mode) OFS0.IWDTSTRT = 1
Counter	Timeout period selection	OFS0.IWDTTOPS[1:0]	IWDTCR.TOPS[1:0]
	Clock divide ratio selection	OFS0.IWDTCKS[3:0]	IWDTCR.CKS[3:0]
	Window start position selection	OFS0.IWDTRPSS[1:0]	IWDTCR.RPSS[1:0]
	Window end position selection	OFS0.IWDTRPES[1:0]	IWDTCR.RPES[1:0]
Reset output or interrupt request output	Reset output or interrupt request output selection	OFS0.IWDTRSTIRQS	IWDTRCR.RSTIRQS
Count stop	Sleep mode count stop control	OFS0.IWDTSLCSTP	IWDTCSTPR.SLCSTP

27.4 Link Operation by ELC

The event link controller (ELC) can use the interrupt request signal generated by the IWDT as the event signal. Therefore, the ELC generates an event to the module specified previously when the IWDT outputs an interrupt request. The event signal is output by the counter underflow and refresh error.
An event signal is output regardless of the setting of the IWDTRCR.RSTIRQS bit in register start mode or the OFS0.IWDTRSTIRQS bit in auto-start mode. An event signal can also be output upon generation of the next interrupt source while the IWDTSR.REFEF or IWDTSR.UNDFF flag is 1.
For details, see section 19, Event Link Controller (ELC).

27.5 Usage Notes

27.5.1 Refresh Operations

When making the settings to control the timing of refreshing, consider variations in the range of errors due to the accuracy of the PCLKB and IWDTCLK and set values which ensure that refreshing is possible.

27.5.2 Clock Divide Ratio Setting

Satisfy the frequency of the PCLKB ≥ 4 × (the frequency of the count source after divide).

28. Serial Communications Interface (SCIg, SCIh)

This MCU has four independent serial communications interface (SCI) channels. The SCI consists of the SCIg module (SCI1, SCI5, and SCI6) and the SCIh module (SCI12).
The SCIg module (SCI1, SCI5, and SCI6) can handle both asynchronous and clock synchronous serial communications. Asynchronous serial data communications can be carried out with standard asynchronous communications chips such as a Universal Asynchronous Receiver/Transmitter (UART) or Asynchronous Communications Interface Adapter (ACIA). As an extended function in asynchronous communications mode, the SCI also supports smart card (IC card) interfaces conforming to ISO/IEC 7816-3 (standard for Identification Cards). The SCI is also supports simple SPI interfaces, and simple I^2C-bus interfaces when configured for single-master systems.
The SCIh module includes the functions of the SCIg module, and supports an extended serial communication protocol formed of Start Frames and Information Frames.
In this section, “PCLK” is used to refer to PCLKB.

28.1 Overview

Table 28.1 lists the specifications of the SCIg module, Table 28.2 lists the specifications of the SCIh module, and Table 28.3 lists the specifications of the individual SCI channels.
Figure 28.1 shows the block diagram of SCI1, Figure 28.2 shows the block diagram of SCI5 and SCI6, and Figure 28.3 shows the block diagram of SCI12 (SCIh).

Table 28.1 SCIg Specifications (1/2)

Item		Description
Serial communication modes		• Asynchronous • Clock synchronous • Smart card interface • Simple I^2C-bus • Simple SPI bus
Transfer speed		Bit rate specifiable with the on-chip baud rate generator.
Full-duplex communications		Transmitter: Continuous transmission possible using double-buffer structure. Receiver: Continuous reception possible using double-buffer structure.
I/O pins		Refer to Table 28.4 to Table 28.6.
Data transfer		Selectable as LSB first or MSB first transfer*1
Interrupt sources		Transmit end, transmit data empty, receive data full, and receive error Completion of generation of a start condition, restart condition, or stop condition (for simple I^2C mode)
Low power consumption function		Module stop state can be set for each channel.
Asynchronous mode	Data length	7, 8, or 9 bits
	Transmission stop bit	1 or 2 bits
	Parity	Even parity, odd parity, or no parity
	Receive error detection	Parity, overrun, and framing errors
	Hardware flow control	CTSn# and RTSn# pins can be used in controlling transmission/reception.
	Start-bit detection	Low level or falling edge is selectable.
	Break detection	When a framing error occurs, a break can be detected by reading the RXDn pin level directly.
	Clock source	An internal or external clock can be selected. Transfer rate clock input from the TMR can be used. (SCI5 and SCI6)
	Double-speed mode	Baud rate generator double-speed mode is selectable.
	Multi-processor communications function	Serial communication among multiple processors
	Noise cancellation	The signal paths from input on the RXDn pins incorporate digital noise filters.

Table 28.1 SCIg Specifications (2/2)

Item		Description
Clock synchronous mode	Data length	8 bits
	Receive error detection	Overrun error
	Hardware flow control	CTSn# and RTSn# pins can be used in controlling transmission/reception.
Smart card interface mode	Error processing	An error signal can be automatically transmitted when detecting a parity error during reception
		Data can be automatically retransmitted when receiving an error signal during transmission
	Data type	Both direct convention and inverse convention are supported.
Simple I^2C mode	Transfer format	I^2C-bus format
	Operating mode	Master (single-master operation only)
	Transfer rate	Fast mode is supported (refer to section 28.2.11, Bit Rate Register (BRR) to set the transfer rate).
	Noise cancellation	The signal paths from input on the SSCLn and SSDAn pins incorporate digital noise filters, and the interval for noise cancellation is adjustable.
Simple SPI bus	Data length	8 bits
	Detection of errors	Overrun error
	SS input pin function	Applying the high level to the SSn# pin can cause the output pins to enter the high-impedance state.
	Clock settings	Four kinds of settings for clock phase and clock polarity are selectable.
Bit rate modulation function		Correction of outputs from the on-chip baud rate generator can reduce errors.
Event link function (supported by SCI5 only)		Error (receive error or error signal detection) event output
		Receive data full event output
		Transmit data empty event output
		Transmit end event output

Note 1. In simple I^2C mode, only MSB first is available.

Table 28.2 SCIh Specifications (1/2)

Item	Description
Serial communication modes	• Asynchronous • Clock synchronous • Smart card interface • Simple I^2C-bus • Simple SPI bus
Transfer speed	Bit rate specifiable with the on-chip baud rate generator.
Full-duplex communications	Transmitter: Continuous transmission possible using double-buffer structure. Receiver: Continuous reception possible using double-buffer structure.
I/O pins	Refer to Table 28.4 to Table 28.7.
Data transfer	Selectable as LSB first or MSB first transfer*1
Interrupt sources	Transmit end, transmit data empty, receive data full, and receive error Completion of generation of a start condition, restart condition, or stop condition (for simple I^2C mode)
Low power consumption function	Module stop state can be set.

Table 28.2 SCIh Specifications (2/2)

Item		Description
Asynchronous mode	Data length	7, 8, or 9 bits
	Transmission stop bit	1 or 2 bits
	Parity	Even parity, odd parity, or no parity
	Receive error detection	Parity, overrun, and framing errors
	Hardware flow control	CTSn# and RTSn# pins can be used in controlling transmission/reception.
	Start-bit detection	Low level or falling edge is selectable.
	Break detection	When a framing error occurs, a break can be detected by reading the RXDn pin level directly.
	Clock source	An internal or external clock can be selected. Transfer rate clock input from the TMR can be used.
	Double-speed mode	Baud rate generator double-speed mode is selectable.
	Multi-processor communications function	Serial communication among multiple processors
	Noise cancellation	The signal paths from input on the RXDn pins incorporate digital noise filters.
Clock synchronous mode	Data length	8 bits
	Receive error detection	Overrun error
	Hardware flow control	CTSn# and RTSn# pins can be used in controlling transmission/reception.
Smart card interface mode	Error processing	An error signal can be automatically transmitted when detecting a parity error during reception
		Data can be automatically retransmitted when receiving an error signal during transmission
	Data type	Both direct convention and inverse convention are supported.
Simple I^{2}C mode	Transfer format	I^{2}C-bus format
	Operating mode	Master (single-master operation only)
	Transfer rate	Fast mode is supported (refer to section 28.2.11, Bit Rate Register (BRR) to set the transfer rate).
	Noise cancellation	The signal paths from input on the SSCLn and SSDAn pins incorporate digital noise filters, and the interval for noise cancellation is adjustable.
Simple SPI bus	Data length	8 bits
	Detection of errors	Overrun error
	SS input pin function	Applying the high level to the SSn# pin can cause the output pins to enter the high-impedance state.
	Clock settings	Four kinds of settings for clock phase and clock polarity are selectable.
Extended serial mode	Start Frame transmission	• Output of a low level as the Break Field over a specified width and generation of interrupts on completion • Detection of bus collisions and the generation of interrupts on detection
	Start Frame reception	• Detection of the Break Field low width and generation of an interrupt on detection • Comparison of Control Fields 0 and 1 and generation of an interrupt when the two match • Two kinds of data for comparison (primary and secondary) can be set in Control Field 1. • A priority interrupt bit can be set in Control Field 1. • Handling of Start Frames that do not include a Break Field • Handling of Start Frames that do not include a Control Field 0 • Function for measuring bit rates
	I/O control function	• Selectable polarity for TXDX12 and RXDX12 signals • Selection of a digital filter for the RXDX12 signal • Half-duplex operation employing RXDX12 and TXDX12 signals multiplexed on the same pin • Selectable timing for the sampling of data received through RXDX12
	Timer function	• Usable as a reload timer
Bit rate modulation function		Correction of outputs from the on-chip baud rate generator can reduce errors.

Note 1. In simple I^{2}C mode, only MSB first is available.

Table 28.3 Functions of SCI Channels

Item	SCI1	SCI5	SCI6	SCI12
Asynchronous mode	Available	Available	Available	Available
Clock synchronous mode	Available	Available	Available	Available
Smart card interface mode	Available	Available	Available	Available
Simple I²C mode	Available	Available	Available	Available
Simple SPI mode	Available	Available	Available	Available
Extended serial mode	Not available	Not available	Not available	Available
TMR clock input	Not available	Available	Available	Available
Event link function	Not available	Available	Not available	Not available

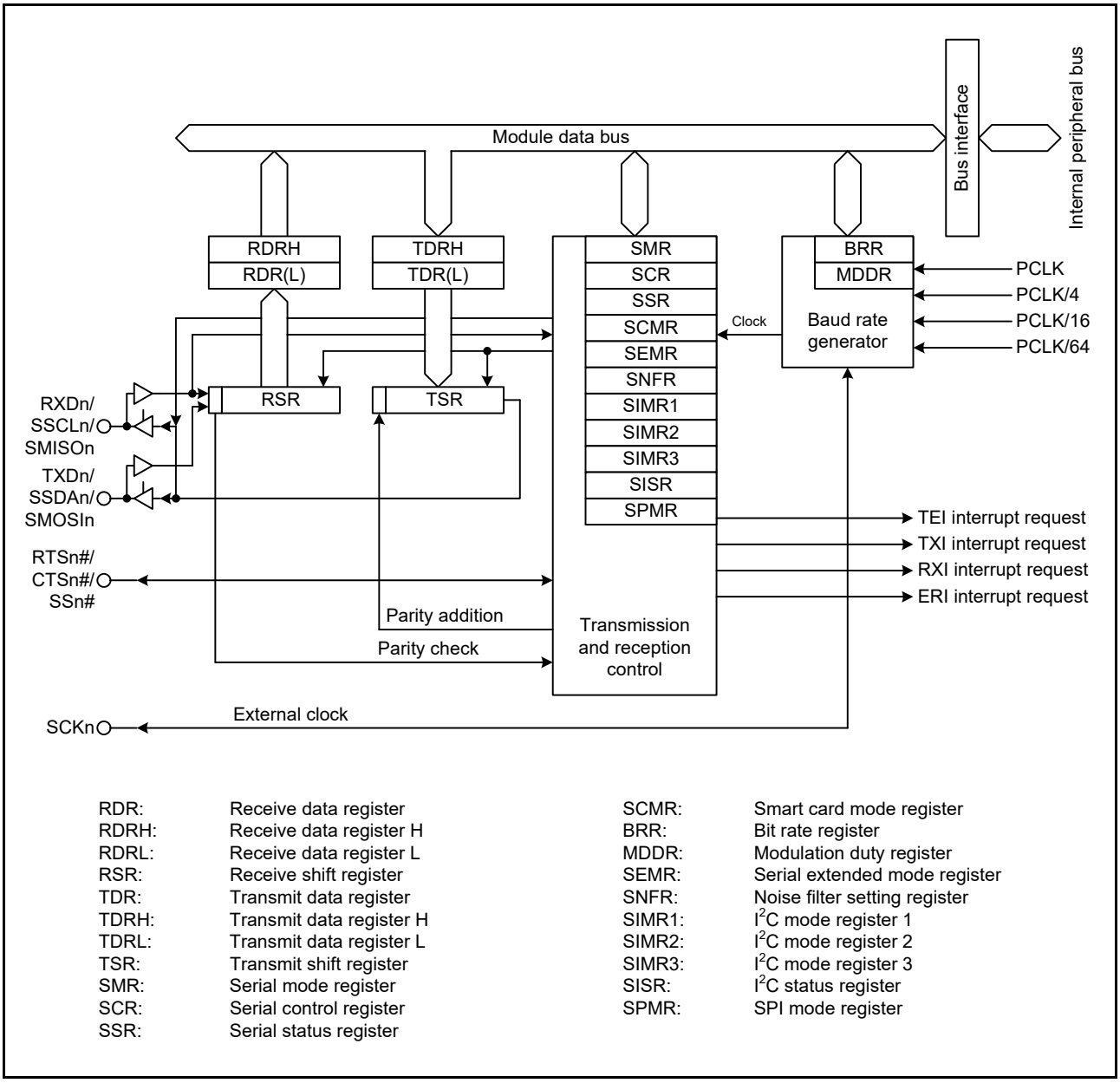

Figure 28.1 Block Diagram of SCIg (SCI1)

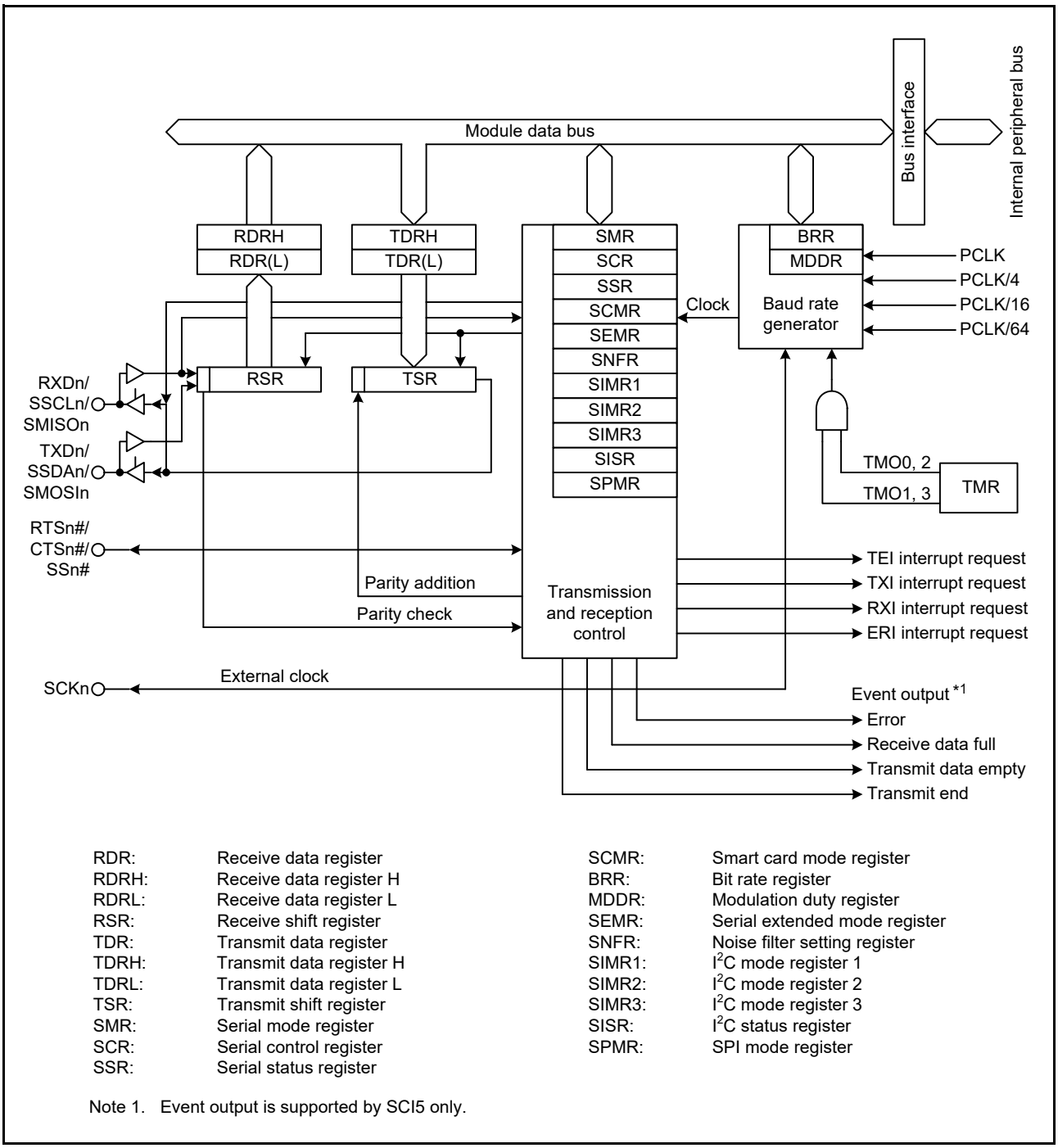

RDR:	Receive data register	SCMR:	Smart card mode register
RDRH:	Receive data register H	BRR:	Bit rate register
RDRL:	Receive data register L	MDDR:	Modulation duty register
RSR:	Receive shift register	SEMR:	Serial extended mode register
TDR:	Transmit data register	SNFR:	Noise filter setting register
TDRH:	Transmit data register H	SIMR1:	I^2C mode register 1
TDRL:	Transmit data register L	SIMR2:	I^2C mode register 2
TSR:	Transmit shift register	SIMR3:	I^2C mode register 3
SMR:	Serial mode register	SISR:	I^2C status register
SCR:	Serial control register	SPMR:	SPI mode register
SSR:	Serial status register		

Note 1. Event output is supported by SCI5 only.

Figure 28.2 Block Diagram of SCIg (SCI5 and SCI6)

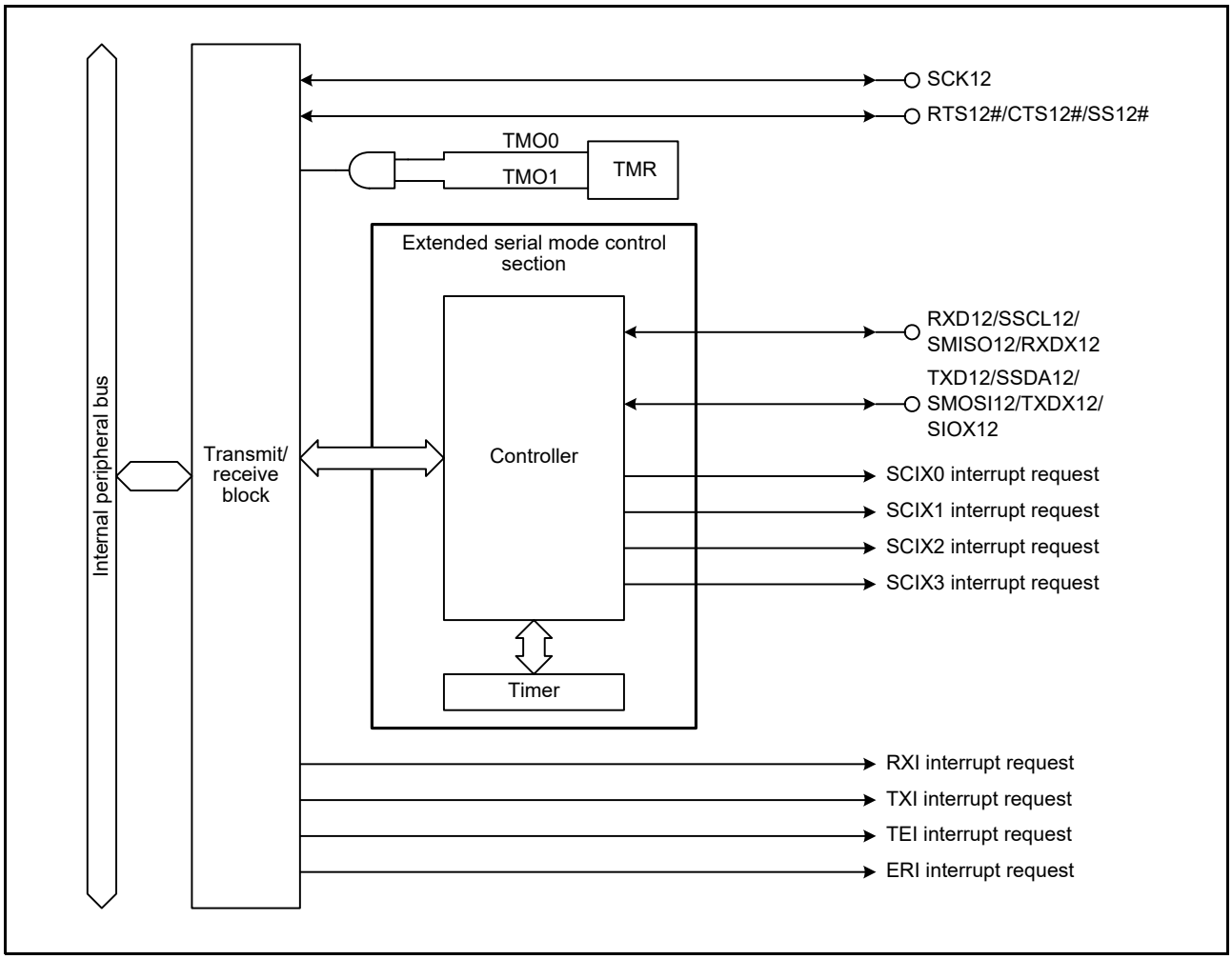

Figure 28.3 Block Diagram of SCIh (SCI12)

Table 28.4 to Table 28.7 list the pin configuration of the SCIs for the individual modes.

Table 28.4 SCI Pin Configuration in Asynchronous Mode and Clock Synchronous Mode

Channel	Pin Name	I/O	Function
SCI1	SCK1	I/O	SCI1 clock input/output
	RXD1	Input	SCI1 receive data input
	TXD1	Output	SCI1 transmit data output
	CTS1#/RTS1#	I/O	SCI1 transfer start control input/output
SCI5	SCK5	I/O	SCI5 clock input/output
	RXD5	Input	SCI5 receive data input
	TXD5	Output	SCI5 transmit data output
	CTS5#/RTS5#	I/O	SCI5 transfer start control input/output
SCI6	SCK6	I/O	SCI6 clock input/output
	RXD6	Input	SCI6 receive data input
	TXD6	Output	SCI6 transmit data output
	CTS6#/RTS6#	I/O	SCI6 transfer start control input/output
SCI12	SCK12	I/O	SCI12 clock input/output
	RXD12	Input	SCI12 receive data input
	TXD12	Output	SCI12 transmit data output
	CTS12#/RTS12#	I/O	SCI12 transfer start control input/output

Table 28.5 SCI Pin Configuration in Simple I^{2}C Mode

Channel	Pin Name	I/O	Function
SCI1	SSCL1	I/O	SCI1 I^{2}C clock input/output
	SSDA1	I/O	SCI1 I^{2}C data input/output
SCI5	SSCL5	I/O	SCI5 I^{2}C clock input/output
	SSDA5	I/O	SCI5 I^{2}C data input/output
SCI6	SSCL6	I/O	SCI6 I^{2}C clock input/output
	SSDA6	I/O	SCI6 I^{2}C data input/output
SCI12	SSCL12	I/O	SCI12 I^{2}C clock input/output
	SSDA12	I/O	SCI12 I^{2}C data input/output

Table 28.6 SCI Pin Configuration in Simple SPI Mode (1/2)

Channel	Pin Name	I/O	Function
SCI1	SCK1	I/O	SCI1 clock input/output
	SMISO1	I/O	SCI1 slave transmit data input/output
	SMOSI1	I/O	SCI1 master transmit data input/output
	SS1#	Input	SCI1 chip select input
SCI5	SCK5	I/O	SCI5 clock input/output
	SMISO5	I/O	SCI5 slave transmit data input/output
	SMOSI5	I/O	SCI5 master transmit data input/output
	SS5#	Input	SCI5 chip select input
SCI6	SCK6	I/O	SCI6 clock input/output
	SMISO6	I/O	SCI6 slave transmit data input/output
	SMOSI6	I/O	SCI6 master transmit data input/output
	SS6#	Input	SCI6 chip select input

Table 28.6 SCI Pin Configuration in Simple SPI Mode (2/2)

Channel	Pin Name	I/O	Function
SCI12	SCK12	I/O	SCI12 clock input/output
	SMISO12	I/O	SCI12 slave transmit data input/output
	SMOSI12	I/O	SCI12 master transmit data input/output
	SS12#	Input	SCI12 chip select input

Table 28.7 SCI Pin Configuration in Extended Serial Mode

Channel	Pin Name	I/O	Function
SCI12	RXDX12	Input	SCI12 receive data input
	TXDX12	Output	SCI12 transmit data output
	SIOX12	I/O	SCI12 transfer data input/output

28.2 Register Descriptions

28.2.1 Receive Shift Register (RSR)

The RSR register is a shift register which is used to receive serial data input from the RXDn pin and converts it into parallel data.
When one frame of data has been received, it is automatically transferred to the RDR register.
The RSR register cannot be directly accessed by the CPU.

28.2.2 Receive Data Register (RDR)

Address(es): SCI1.RDR 0008 A025h, SCI5.RDR 0008 A0A5h, SCI6.RDR 0008 A0C5h, SCI12.RDR 0008 B305h

	b7	b6	b5	b4	b3	b2	b1	b0
Value after reset:	0	0	0	0	0	0	0	0

The RDR register is an 8-bit register that stores receive data.
When one frame of serial data has been received, the received serial data is transferred from the RSR register to the RDR register. Then the RSR register can receive the next data.
Since the RSR and RDR registers function as a double buffer in this way, continuous receive operations can be performed.
Read the RDR register only once after a receive data full interrupt (RXI) has occurred. Note that if next one frame of data is received before reading receive data from the RDR register, an overrun error occurs.
The RDR register cannot be written to by the CPU.

28.2.3 Receive Data Register H, L, HL (RDRH, RDRL, RDRHL)

- Receive Data Register H (RDRH)

Address(es): SCI1.RDRH 0008 A030h, SCI5.RDRH 0008 A0B0h, SCI6.RDRH 0008 A0D0h, SCI12.RDRH 0008 B310h

- Receive Data Register L (RDRL)

Address(es): SCI1.RDRL 0008 A031h, SCI5.RDRL 0008 A0B1h, SCI6.RDRL 0008 A0D1h, SCI12.RDRL 0008 B311h

- Receive Data Register HL (RDRHL)

Address(es): SCI1.RDRHL 0008 A030h, SCI5.RDRHL 0008 A0B0h, SCI6.RDRHL 0008 A0D0h, SCI12.RDRHL 0008 B310h

	RDRHL															
	RDRH								RDRL							
	b7	b6	b5	b4	b3	b2	b1	b0	b7	b6	b5	b4	b3	b2	b1	b0
Value after reset:	0	0	0	0	0	0	0	0	0	0	0	0	0	0	0	0

The RDRH and RDRL registers are 8-bit registers that store receive data. Use these registers when asynchronous mode and 9-bit data length are selected.
The RDRL register is the shadow register of the RDR register; i.e. access to the RDRL register is equivalent to access to the RDR register.
After one frame of data is received, the received data is transferred from the RSR register to these registers, thus allowing the RSR register to receive the next data.
The RSR, RDRH and RDRL registers have a double-buffered construction to enable continuous reception.
Read the RDRH and RDRL registers should be performed only once in the order from the RDRH register to the RDRL register when a receive data full interrupt (RXI) request is issued. Note that an overrun error occurs when the next frame of data is received before the received data has been read from the RDRL register.
The CPU cannot write to the RDRH and RDRL registers. Bits 0 to 7 in the RDRH register are fixed to 0. These bits are read as 0.
The RDRHL register can be accessed in 16-bit units.

28.2.4 Transmit Data Register (TDR)

Address(es): SCI1.TDR 0008 A023h, SCI5.TDR 0008 A0A3h, SCI6.TDR 0008 A0C3h, SCI12.TDR 0008 B303h

	b7	b6	b5	b4	b3	b2	b1	b0
Value after reset:	1	1	1	1	1	1	1	1

The TDR register is an 8-bit register that stores transmit data.
When the SCI detects that the TSR register is empty, it transfers the transmit data written in the TDR register to the TSR register and starts transmission.
The double-buffered structures of the TDR register and the TSR register enable continuous serial transmission. If the next transmit data has already been written to the TDR register when one frame of data is transmitted, the SCI transfers the written data to the TSR register to continue transmission.
The CPU is able to read from or write to the TDR register at any time. Only write transmit data to the TDR register once after each instance of the transmit data empty interrupt (TXI).

28.2.5 Transmit Data Register H, L, HL (TDRH, TDRL, TDRHL)

- Transmit Data Register H (TDRH)

Address(es): SCI1.TDRH 0008 A02Eh, SCI5.TDRH 0008 A0AEh, SCI6.TDRH 0008 A0CEh, SCI12.TDRH 0008 B30Eh

- Transmit Data Register L (TDRL)

Address(es): SCI1.TDRL 0008 A02Fh, SCI5.TDRL 0008 A0AFh, SCI6.TDRL 0008 A0CFh, SCI12.TDRL 0008 B30Fh

- Transmit Data Register HL (TDRHL)

Address(es): SCI1.TDRHL 0008 A02Eh, SCI5.TDRHL 0008 A0AEh, SCI6.TDRHL 0008 A0CEh, SCI12.TDRHL 0008 B30Eh

	TDRHL															
	TDRH								TDRL							
	b7	b6	b5	b4	b3	b2	b1	b0	b7	b6	b5	b4	b3	b2	b1	b0
Value after reset:	1	1	1	1	1	1	1	1	1	1	1	1	1	1	1	1

The TDRH and TDRL registers are 8-bit registers that store transmit data. Use these registers when asynchronous mode and 9-bit data length are selected.
The TDRL register is the shadow register of the TDR register; i.e. access to the TDRL register is equivalent to access to the TDR register.
When empty space is detected in the TSR register, the transmit data stored in the TDRH and TDRL registers is transferred to the TSR register; i.e., transmitting is started.
The TSR, TDRH and TDRL registers have a double-buffered construction to realize continuous reception. When the next data to be transmitted is stored in the TDRL register after one frame of data has been transmitted, the transmitting operation is continued by transfer to the TSR register.
The CPU can read and write to the TDRH and TDRL registers. Bits 0 to 7 in the RDRH register are fixed to 1. These bits are read as 1. The write value should be 1.
Writing transmit data to the TDRH and TDRL registers should be performed only once in the order from the TDRH register to the TDRL register when a transmit data empty interrupt (TXI) request is issued.
The TDRHL register can be accessed in 16-bit units.

28.2.6 Transmit Shift Register (TSR)

The TSR register is a shift register that transmits serial data.
To perform serial data transmission, the SCI first automatically transfers transmit data from the TDR register to the TSR register, and then sends the data to the TXDn pin.
The TSR register cannot be directly accessed by the CPU.

28.2.7 Serial Mode Register (SMR)

Some bits in the SMR register have different functions in smart card interface mode and non-smart card interface mode.

(1) Non-Smart Card Interface Mode (SCMR.SMIF = 0)

Address(es): SCI1.SMR 0008 A020h, SCI5.SMR 0008 A0A0h, SCI6.SMR 0008 A0C0h, SCI12.SMR 0008 B300h

	b7	b6	b5	b4	b3	b2	b1	b0
	CM	CHR	PE	PM	STOP	MP	CKS[1:0]	
Value after reset:	0	0	0	0	0	0	0	0

Bit	Symbol	Bit Name	Description	R/W
b1, b0	CKS[1:0]	Clock Select	b1 b0 0 0: PCLK (n = 0)*1 0 1: PCLK/4 (n = 1)*1 1 0: PCLK/16 (n = 2)*1 1 1: PCLK/64 (n = 3)*1	R/W*4
b2	MP	Multi-Processor Mode	(Valid only in asynchronous mode) 0: Multi-processor communications function is disabled 1: Multi-processor communications function is enabled	R/W*4
b3	STOP	Stop Bit Length	(Valid only in asynchronous mode) 0: 1 stop bit 1: 2 stop bits	R/W*4
b4	PM	Parity Mode	(Valid only when the PE bit is 1) 0: Selects even parity 1: Selects odd parity	R/W*4
b5	PE	Parity Enable	(Valid only in asynchronous mode) • When transmitting 0: Parity bit addition is not performed 1: The parity bit is added • When receiving 0: Parity bit checking is not performed 1: The parity bit is checked	R/W*4
b6	CHR	Character Length	(Valid only in asynchronous mode*2) Selects in combination with the SCMR.CHR1 bit. CHR1 CHR 0 0: Transmit/receive in 9-bit data length 0 1: Transmit/receive in 9-bit data length 1 0: Transmit/receive in 8-bit data length (initial value) 1 1: Transmit/receive in 7-bit data length*3	R/W*4
b7	CM	Communications Mode	0: Asynchronous mode or simple I^{2}C mode 1: Clock synchronous mode or simple SPI mode	R/W*4

Note 1. n is the decimal notation of the value of n in the BRR register (refer to section 28.2.11, Bit Rate Register (BRR)).
Note 2. In other than asynchronous mode, this bit setting is invalid and a fixed data length of 8 bits is used.
Note 3. LSB first is fixed and the MSB (bit 7) in the TDR register is not transmitted in transmission.
Note 4. Writable only when the SCR.TE bit is 0 and the SCR.RE bit is 0 (both serial transmission and reception are disabled).

CKS[1:0] Bits (Clock Select)

These bits select the clock source for the on-chip baud rate generator.

For the relation between the settings of these bits and the baud rate, refer to section 28.2.11, Bit Rate Register (BRR).

MP Bit (Multi-Processor Mode)

Disables/enables the multi-processor communications function. The settings of the PE bit and PM bit are invalid in multi-processor mode.

STOP Bit (Stop Bit Length)

Selects the stop bit length in transmission.
In reception, only the first stop bit is checked regardless of this bit setting. If the second stop bit is 0, it is treated as the start bit of the next transmit frame.

PM Bit (Parity Mode)

Selects the parity mode (even or odd) for transmission and reception.
The setting of the PM bit is invalid in multi-processor mode.

PE Bit (Parity Enable)

When this bit is set to 1, the parity bit is added to transmit data, and the parity bit is checked in reception.
Irrespective of the setting of the PE bit, the parity bit is not added or checked in multi-processor format.

CHR Bit (Character Length)

Selects the data length for transmission and reception.
Selects in combination with the SCMR.CHR1 bit.
In other than asynchronous mode, a fixed data length of 8 bits is used.

(2) Smart Card Interface Mode (SCMR.SMIF = 1)

Address(es): SMCI1.SMR 0008 A020h, SMCI5.SMR 0008 A0A0h, SMCI6.SMR 0008 A0C0h, SMCI12.SMR 0008 B300h

	b7	b6	b5	b4	b3	b2	b1	b0
	GM	BLK	PE	PM	BCP[1:0]		CKS[1:0]	
Value after reset:	0	0	0	0	0	0	0	0

Bit	Symbol	Bit Name	Description	R/W
b1, b0	CKS[1:0]	Clock Select	b1 b0 0 0: PCLK (n = 0)*1 0 1: PCLK/4 (n = 1)*1 1 0: PCLK/16 (n = 2)*1 1 1: PCLK/64 (n = 3)*1	R/W*2
b3, b2	BCP[1:0]	Base Clock Pulse	Selects the number of base clock cycles in combination with the SCMR.BCP2 bit. Table 28.8 lists the combinations of the SCMR.BCP2 bit and SMR.BCP[1:0] bits.	R/W*2
b4	PM	Parity Mode	(Valid only when the PE bit is 1) 0: Selects even parity 1: Selects odd parity	R/W*2
b5	PE	Parity Enable	When this bit is set to 1, a parity bit is added to transmit data, and the parity of received data is checked. Set this bit to 1 in smart card interface mode.	R/W*2
b6	BLK	Block Transfer Mode	0: Non-block transfer mode operation 1: Block transfer mode operation	R/W*2
b7	GM	GSM Mode	0: Non-GSM mode operation 1: GSM mode operation	R/W*2

Note 1. n is the decimal notation of the value of n in the BRR register (refer to section 28.2.11, Bit Rate Register (BRR)).
Note 2. Writable only when the SCR.TE bit is 0 and the SCR.RE bit is 0 (both serial transmission and reception are disabled).

CKS[1:0] Bits (Clock Select)

These bits select the clock source for the on-chip baud rate generator.

For the relationship between the settings of these bits and the baud rate, refer to section 28.2.11, Bit Rate Register (BRR).

BCP[1:0] Bits (Base Clock Pulse)

These bits select the number of base clock cycles in a 1-bit data transfer time in smart card interface mode.

Set these bits in combination with the SCMR.BCP2 bit.

For details, refer to section 28.6.4, Receive Data Sampling Timing and Reception Margin.

Table 28.8 Combinations of the SCMR.BCP2 Bit and SMR.BCP[1:0] Bits

SCMR.BCP2 Bit	SMR.BCP[1:0] Bits		Number of Base Clock Cycles for 1-Bit Transfer Period
0	0	0	93 clock cycles (S = 93)*1
0	0	1	128 clock cycles (S = 128)*1
0	1	0	186 clock cycles (S = 186)*1
0	1	1	512 clock cycles (S = 512)*1
1	0	0	32 clock cycles (S = 32)*1 (Initial Value)
1	0	1	64 clock cycles (S = 64)*1
1	1	0	372 clock cycles (S = 372)*1
1	1	1	256 clock cycles (S = 256)*1

Note 1. S is the value of S in the BRR register (refer to section 28.2.11, Bit Rate Register (BRR)).

PM Bit (Parity Mode)

Selects the parity mode for transmission and reception (even or odd).
For details on the usage of this bit in smart card interface mode, refer to section 28.6.2, Data Format (Except in Block Transfer Mode).

PE Bit (Parity Enable)

Set the PE bit to 1.
The parity bit is added to transmit data before transmission, and the parity bit is checked in reception.

BLK Bit (Block Transfer Mode)

Setting this bit to 1 allows block transfer mode operation.
For details, refer to section 28.6.3, Block Transfer Mode.

GM Bit (GSM Mode)

Setting this bit to 1 allows GSM mode operation.
In GSM mode, the SSR.TEND flag set timing is put forward to 11.0 etu (elementary time unit = 1-bit transfer time) from the start and the clock output control function is appended. For details, refer to section 28.6.6, Serial Data Transmission (Except in Block Transfer Mode) and section 28.6.8, Clock Output Control.

28.2.8 Serial Control Register (SCR)

Some bits in the SCR register have different functions in smart card interface mode and non-smart card interface mode.

(1) Non-Smart Card Interface Mode (SCMR.SMIF = 0)

Address(es): SCI1.SCR 0008 A022h, SCI5.SCR 0008 A0A2h, SCI6.SCR 0008 A0C2h, SCI12.SCR 0008 B302h

	b7	b6	b5	b4	b3	b2	b1	b0
	TIE	RIE	TE	RE	MPIE	TEIE	CKE[1:0]	
Value after reset:	0	0	0	0	0	0	0	0

Bit	Symbol	Bit Name	Description	R/W
b1, b0	CKE[1:0]	Clock Enable	(Asynchronous mode) b1 b0 0 0: On-chip baud rate generator The SCKn pin becomes high-impedance. 0 1: On-chip baud rate generator The clock with the same frequency as the bit rate is output from the SCKn pin. 1 x: External clock or TMR clock*2 • The clock with a frequency 16 times the bit rate should be input from the SCKn pin. Input a clock signal with a frequency eight times the bit rate when the SEMR.ABCS bit is 1. • The SCKn pin becomes high-impedance when the TMR clock*2 is used. (Clock synchronous mode) b1 b0 0 x: Internal clock The SCKn pin functions as the clock output pin. 1 x: External clock The SCKn pin functions as the clock input pin.	R/W*1
b2	TEIE	Transmit End Interrupt Enable	0: A TEI interrupt request is disabled 1: A TEI interrupt request is enabled	R/W
b3	MPIE	Multi-Processor Interrupt Enable	(Valid in asynchronous mode when the SMR.MP bit is 1) 0: Normal reception 1: When the data with the multi-processor bit set to 0 is received, the data is not read, and setting the status flags RDRF, ORER, and FER in the SSR register to 1 is disabled. When the data with the multi-processor bit set to 1 is received, the MPIE bit is automatically cleared to 0, and normal reception is resumed.	R/W
b4	RE	Receive Enable	0: Serial reception is disabled 1: Serial reception is enabled	R/W*3
b5	TE	Transmit Enable	0: Serial transmission is disabled 1: Serial transmission is enabled	R/W*3
b6	RIE	Receive Interrupt Enable	0: RXI and ERI interrupt requests are disabled 1: RXI and ERI interrupt requests are enabled	R/W
b7	TIE	Transmit Interrupt Enable	0: A TXI interrupt request is disabled 1: A TXI interrupt request is enabled	R/W

x: Don't care

Note 1. Writable only when TE = 0 and RE = 0.

Note 2. TMR clock is selectable for SCI5, SCI6, and SCI12.

Note 3. 1 can be written only when TE = 0 and RE = 0, while the SMR.CM bit is 1. After setting TE or RE to 1, only 0 can be written to TE and RE. While the SMR.CM bit is 0 and the SIMR1.IICM bit is 0, writing is enabled under any condition.

CKE[1:0] Bits (Clock Enable)

These bits select the clock source and SCKn pin function.
The combination of the settings of these bits and of the SEMR.ACS0 bit sets the internal TMR clock.

TEIE Bit (Transmit End Interrupt Enable)

Enables or disables a TEI interrupt request.
A TEI interrupt request is disabled by setting the TEIE bit to 0.
In simple I^2C mode, the TEI is allocated to the interrupt on completion of issuing a start, restart, or stop condition (STI). In this case, the TEIE bit can be used to enable or disable the STI.

MPIE Bit (Multi-Processor Interrupt Enable)

When this bit is set to 1 and the data with the multi-processor bit set to 0 is received, the data is not read and setting the status flags RDRF, ORER, and FER in the SSR register to 1 is disabled. When the data with the multi-processor bit set to 1 is received, the MPIE bit is automatically cleared to 0, and normal reception is resumed. For details, refer to section 28.4, Multi-Processor Communications Function.
When the data with the multi-processor bit set to 0 is received, the receive data is not transferred from the RSR register to the RDR register, a receive error is not detected, and setting the flags RDRF, ORER, and FER to 1 is disabled.
When the data with the multi-processor bit set to 1 is received, the MPB bit is set to 1, the MPIE bit is automatically cleared to 0, the RXI and ERI interrupt requests are enabled (if the SCR.RIE bit is set to 1), and setting the flags RDRF, ORER, and FER to 1 is enabled.
Set the MPIE bit to 0 if multi-processor communications function is not to be used.

RE Bit (Receive Enable)

Enables or disables serial reception.
When this bit is set to 1, serial reception is started by detecting the start bit in asynchronous mode or the synchronous clock input in clock synchronous mode. Note that the SMR register should be set prior to setting the RE bit to 1 in order to designate the reception format.
Even if reception is halted by setting the RE bit to 0, the ORER, FER, PER, and RDRF flags in the SSR register are not affected and the previous value is retained.

TE Bit (Transmit Enable)

Enables or disables serial transmission.
When this bit is set to 1, serial transmission is started by writing transmit data to the TDR register. Note that the SMR register should be set prior to setting the TE bit to 1 in order to designate the transmission format.

RIE Bit (Receive Interrupt Enable)

Enables or disables RXI and ERI interrupt requests.
An RXI interrupt request is disabled by setting the RIE bit to 0.
An ERI interrupt request can be canceled by reading 1 from the ORER, FER, or PER flag in the SSR register and then setting the flag to 0, or setting the RIE bit to 0.

TIE Bit (Transmit Interrupt Enable)

Enables or disables TXI interrupt request.
A TXI interrupt request is disabled by setting the TIE bit to 0.

(2) Smart Card Interface Mode (SCMR.SMIF = 1)

Address(es): SMCI1.SCR 0008 A022h, SMCI5.SCR 0008 A0A2h, SMCI6.SCR 0008 A0C2h, SMCI12.SCR 0008 B302h

	b7	b6	b5	b4	b3	b2	b1	b0
	TIE	RIE	TE	RE	MPIE	TEIE	CKE[1:0]	
Value after reset:	0	0	0	0	0	0	0	0

Bit	Symbol	Bit Name	Description	R/W
b1, b0	CKE[1:0]	Clock Enable	• When SMR.GM = 0 b1 b0 0 0: Output disabled The SCKn pin becomes high-impedance. 0 1: Clock output 1 x: Setting prohibited • When SMR.GM = 1 b1 b0 0 0: Output fixed low x 1: Clock output 1 0: Output fixed high	R/W*1
b2	TEIE	Transmit End Interrupt Enable	This bit should be 0 in smart card interface mode.	R/W
b3	MPIE	Multi-Processor Interrupt Enable	This bit should be 0 in smart card interface mode.	R/W
b4	RE	Receive Enable	0: Serial reception is disabled 1: Serial reception is enabled	R/W*2
b5	TE	Transmit Enable	0: Serial transmission is disabled 1: Serial transmission is enabled	R/W*2
b6	RIE	Receive Interrupt Enable	0: RXI and ERI interrupt requests are disabled 1: RXI and ERI interrupt requests are enabled	R/W
b7	TIE	Transmit Interrupt Enable	0: A TXI interrupt request is disabled 1: A TXI interrupt request is enabled	R/W

x: Don’t care

Note 1. Writable only when TE = 0 and RE = 0.

Note 2. 1 can be written only when TE = 0 and RE = 0. After setting TE or RE to 1, only 0 can be written in TE and RE.

For details on interrupt requests, refer to section 28.12, Interrupt Sources.

CKE[1:0] Bits (Clock Enable)

These bits control the clock output from the SCKn pin.

In GSM mode, clock output can be dynamically switched. For details, refer to section 28.6.8, Clock Output Control.

TEIE Bit (Transmit End Interrupt Enable)

This bit should be 0 in smart card interface mode.

MPIE Bit (Multi-Processor Interrupt Enable)

This bit should be 0 in smart card interface mode.

RE Bit (Receive Enable)

Enables or disables serial reception.
When this bit is set to 1, serial reception is started by detecting the start bit. Note that the SMR register should be set prior to setting the RE bit to 1 in order to designate the reception format.
Even if reception is halted by setting the RE bit to 0, the ORER, FER, and PER flags in the SSR register are not affected and the previous value is retained.

TE Bit (Transmit Enable)

Enables or disables serial transmission.
When this bit is set to 1, serial transmission is started by writing transmit data to the TDR register. Note that the SMR register should be set prior to setting the TE bit to 1 in order to designate the transmission format.

RIE Bit (Receive Interrupt Enable)

Enables or disables RXI and ERI interrupt requests.
An RXI interrupt request is disabled by setting the RIE bit to 0.
An ERI interrupt request can be canceled by reading 1 from the ORER, FER, or PER flag in the SSR register and then setting the flag to 0, or setting the RIE bit to 0.

TIE Bit (Transmit Interrupt Enable)

Enables or disables TXI interrupt request.
A TXI interrupt request is disabled by setting the TIE bit to 0.

28.2.9 Serial Status Register (SSR)

Some bits in the SSR register have different functions in smart card interface mode and non-smart card interface mode.

(1) Non-Smart Card Interface Mode (SCMR.SMIF = 0)

Address(es): SCI1.SSR 0008 A024h, SCI5.SSR 0008 A0A4h, SCI6.SSR 0008 A0C4h, SCI12.SSR 0008 B304h

	b7	b6	b5	b4	b3	b2	b1	b0
	TDRE	RDRF	ORER	FER	PER	TEND	MPB	MPBT
Value after reset:	1	0	0	0	0	1	0	0

Bit	Symbol	Bit Name	Description	R/W
b0	MPBT	Multi-Processor Bit Transfer	Sets the multi-processor bit for adding to the transmission frame 0: Data transmission cycles 1: ID transmission cycles	R/W
b1	MPB	Multi-Processor	Value of the multi-processor bit in the reception frame 0: Data transmission cycles 1: ID transmission cycles	R
b2	TEND	Transmit End Flag	0: A character is being transmitted. 1: Character transfer has been completed.	R
b3	PER	Parity Error Flag	0: No parity error occurred 1: A parity error has occurred	R/(W) *1
b4	FER	Framing Error Flag	0: No framing error occurred 1: A framing error has occurred	R/(W) *1
b5	ORER	Overrun Error Flag	0: No overrun error occurred 1: An overrun error has occurred	R/(W) *1
b6	RDRF	Receive Data Full Flag	0: No valid data is held in the RDR register 1: Received data is held in the RDR register	R/(W) *2
b7	TDRE	Transmit Data Empty Flag	0: Data to be transmitted is held in the TDR register 1: No data is held in the TDR register	R/(W) *2

Note 1. Only 0 can be written to this bit, to clear the flag. To clear this flag, confirm that the flag is 1 and then set it to 0.
Note 2. Write 1 when writing is necessary.

MPB Bit (Multi-Processor)

Holds the value of the multi-processor bit in the reception frame. This bit does not change when the SCR.RE bit is 0.

TEND Flag (Transmit End Flag)

Indicates completion of transmission.

[Setting conditions]

- When the SCR.TE bit is set to 0 (serial transmission is disabled)
  When the SCR.TE bit is changed from 0 to 1, the TEND flag is not affected and retains the value 1.
- When the TDR register is not updated at the time of transmission of the tail-end bit of a character being transmitted

[Clearing condition]

- When transmit data are written to the TDR register while the SCR.TE bit is 1
  When setting the TEND flag to 0 to complete the interrupt handling, refer to section 14.4.1.2, Operation of Status Flags for Level-Detected Interrupts.

PER Flag (Parity Error Flag)

Indicates that a parity error has occurred during reception in asynchronous mode and the reception ends abnormally.

[Setting condition]

- When a parity error is detected during reception
  Although receive data when the parity error occurs is transferred to the RDR register, no RXI interrupt request occurs. Note that when the PER flag is being set to 1, the subsequent receive data is not transferred to the RDR register.

[Clearing condition]

- When 0 is written to the PER flag after reading PER = 1
  When setting the PER flag to 0 to complete the interrupt handling, refer to section 14.4.1.2, Operation of Status Flags for Level-Detected Interrupts.
  Even when the SCR.RE bit is set to 0 (serial reception is disabled), the PER flag is not affected and retains its previous value.

FER Flag (Framing Error Flag)

Indicates that a framing error has occurred during reception in asynchronous mode and the reception ends abnormally.

[Setting condition]

- When the stop bit is 0
  In 2-stop-bit mode, only the first stop bit is checked whether it is 1 but the second stop bit is not checked. Note that although receive data when the framing error occurs is transferred to the RDR register, no RXI interrupt request occurs. In addition, when the FER flag is being set to 1, the subsequent receive data is not transferred to the RDR register.

[Clearing condition]

- When 0 is written to the FER flag after reading FER = 1
  When setting the FER flag to 0 to complete the interrupt handling, refer to section 14.4.1.2, Operation of Status Flags for Level-Detected Interrupts.
  Even when the SCR.RE bit is set to 0, the FER flag is not affected and retains its previous value.

ORER Flag (Overrun Error Flag)

Indicates that an overrun error has occurred during reception and the reception ends abnormally.

[Setting condition]

- When the next data is received before receive data is read from the RDR register
  In the RDR register, receive data prior to an overrun error occurrence is retained, but data received after the overrun error occurrence is lost. When the ORER flag is set to 1, subsequent serial reception cannot be performed. Note that, in clock synchronous mode, serial transmission also cannot continue.

[Clearing condition]

- When 0 is written to the ORER flag after reading ORER = 1
  When setting the ORER flag to 0 to complete the interrupt handling, refer to section 14.4.1.2, Operation of Status Flags for Level-Detected Interrupts.
  Even when the SCR.RE bit is set to 0, the ORER flag is not affected and retains its previous value.

RDRF Flag (Receive Data Full Flag)

Indicates whether the RDR register has received data.

[Setting condition]

- When data has been received normally, and transferred from the RSR register to the RDR register

[Clearing condition]

- When data is read from the RDR register

TDRE Flag (Transmit Data Empty Flag)

Indicates whether the TDR register has data to be transmitted.

[Setting condition]

- When data is transferred from the TDR register to the TSR register

[Clearing condition]

- When data is written to the TDR register

(2) Smart Card Interface Mode (SCMR.SMIF = 1)

Address(es): SMCI1.SSR 0008 A024h, SMCI5.SSR 0008 A0A4h, SMCI6.SSR 0008 A0C4h, SMCI12.SSR 0008 B304h

	b7	b6	b5	b4	b3	b2	b1	b0
	TDRE	RDRF	ORER	ERS	PER	TEND	MPB	MPBT
Value after reset:	1	0	0	0	0	1	0	0

Bit	Symbol	Bit Name	Description	R/W
b0	MPBT	Multi-Processor Bit Transfer	This bit should be set to 0 in smart card interface mode.	R/W
b1	MPB	Multi-Processor	This bit is not used in smart card interface mode. It should be set to 0.	R
b2	TEND	Transmit End Flag	0: A character is being transmitted. 1: Character transfer has been completed.	R
b3	PER	Parity Error Flag	0: No parity error occurred 1: A parity error has occurred	R/(W) *1
b4	ERS	Error Signal Status Flag	0: Low error signal not responded 1: Low error signal responded	R/(W) *1
b5	ORER	Overrun Error Flag	0: No overrun error occurred 1: An overrun error has occurred	R/(W) *1
b6	RDRF	Receive Data Full Flag	0: No valid data is held in the RDR register 1: Received data is held in the RDR register	R/(W) *2
b7	TDRE	Transmit Data Empty Flag	0: Data to be transmitted is held in the TDR register 1: No data is held in the TDR register	R/(W) *2

Note 1. Only 0 can be written to this bit, to clear the flag. To clear this flag, confirm that the flag is 1 and then set it to 0.
Note 2. Write 1 when writing is necessary.

TEND Flag (Transmit End Flag)

With no error signal from the receiving side, this bit is set to 1 when further data for transfer is ready to be transferred to the TDR register.

[Setting conditions]

- When the SCR.TE bit is 0 (serial transmission is disabled)
  When the SCR.TE bit is changed from 0 to 1, the TEND flag is not affected and retains the value 1.
- When a specified period has elapsed after the latest transmission of 1 byte, the ERS flag is 0, and the TDR register is not updated
  The set timing is determined by register settings as listed below.
  When SMR.GM = 0 and SMR.BLK = 0, 12.5 etu after the start of transmission
  When SMR.GM = 0 and SMR.BLK = 1, 11.5 etu after the start of transmission
  When SMR.GM = 1 and SMR.BLK = 0, 11.0 etu after the start of transmission
  When SMR.GM = 1 and SMR.BLK = 1, 11.0 etu after the start of transmission

[Clearing condition]

- When transmit data are written to the TDR register while the SCR.TE bit is 1
  When setting the TEND flag to 0 to complete the interrupt handling, refer to section 14.4.1.2, Operation of Status Flags for Level-Detected Interrupts.

PER Flag (Parity Error Flag)

Indicates that a parity error has occurred during reception in asynchronous mode and the reception ends abnormally.

[Setting condition]

- When a parity error is detected during reception
  Although receive data when the parity error occurs is transferred to the RDR register, no RXI interrupt request occurs. Note that when the PER flag is being set to 1, the subsequent receive data is not transferred to the RDR register.

[Clearing condition]

- When 0 is written to the PER flag after reading PER = 1
  When setting the PER flag to 0 to complete the interrupt handling, refer to section 14.4.1.2, Operation of Status Flags for Level-Detected Interrupts.
  Even when the SCR.RE bit is set to 0 (serial reception is disabled), the PER flag is not affected and retains its previous value.

ERS Flag (Error Signal Status Flag)

[Setting condition]

- When a low error signal is sampled

[Clearing condition]

- When 0 is written to the ERS flag after reading ERS = 1
  When setting the ERS flag to 0 to complete the interrupt handling, refer to section 14.4.1.2, Operation of Status Flags for Level-Detected Interrupts.
  Even when the SCR.RE bit is set to 0, the ERS flag is not affected and retains its previous value.

ORER Flag (Overrun Error Flag)

Indicates that an overrun error has occurred during reception and the reception ends abnormally.

[Setting condition]

- When the next data is received before receive data is read from the RDR register
  In the RDR register, the receive data prior to an overrun error occurrence is retained, but data received following the overrun error occurrence is lost. When the ORER flag is set to 1, subsequent serial reception cannot be performed.

[Clearing condition]

- When 0 is written to the ORER flag after reading ORER = 1
  When setting the ORER flag to 0 to complete the interrupt handling, refer to section 14.4.1.2, Operation of Status Flags for Level-Detected Interrupts.
  Even when the SCR.RE bit is set to 0, the ORER flag is not affected and retains its previous value.

RDRF Flag (Receive Data Full Flag)

Indicates whether the RDR register has received data.

[Setting condition]

- When data has been received normally, and transferred from the RSR register to the RDR register

[Clearing condition]

- When data is read from the RDR register

TDRE Flag (Transmit Data Empty Flag)

Indicates whether the TDR register has data to be transmitted.

[Setting condition]

- When data is transferred from the TDR register to the TSR register

[Clearing condition]

- When data is written to the TDR register

28.2.10 Smart Card Mode Register (SCMR)

Address(es): SCI1.SCMR 0008 A026h, SCI5.SCMR 0008 A0A6h, SCI6.SCMR 0008 A0C6h, SCI12.SCMR 0008 B306h, SMCI1.SCMR 0008 A026h, SMCI5.SCMR 0008 A0A6h, SMCI6.SCMR 0008 A0C6h, SMCI12.SCMR 0008 B306h

	b7	b6	b5	b4	b3	b2	b1	b0
	BCP2	—	—	CHR1	SDIR	SINV	—	SMIF
Value after reset:	1	1	1	1	0	0	1	0

Bit	Symbol	Bit Name	Description	R/W
b0	SMIF	Smart Card Interface Mode Select	0: Non-smart card interface mode (Asynchronous mode, clock synchronous mode, simple SPI mode, or simple I²C mode) 1: Smart card interface mode	R/W*1
b1	—	Reserved	This bit is read as 1. The write value should be 1.	R/W
b2	SINV	Transmitted/Received Data Invert*2, *3	0: Data bits in the TDR register are transferred to the TSR register as they are. Data bits in the RSR register are transferred to the RDR register as they are. 1: Data bits in the TDR register are transferred to the TSR register with inverting. Data bits in the RSR register are transferred to the RDR register with inverting.	R/W*1
b3	SDIR	Transmitted/Received Data Transfer Direction*2, *4	0: Transfer with LSB first 1: Transfer with MSB first	R/W*1
b4	CHR1	Character Length 1*5	Selects in combination with the SMR.CHR bit. CHR1 CHR 0 0: Transmit/receive in 9-bit data length 0 1: Transmit/receive in 9-bit data length 1 0: Transmit/receive in 8-bit data length (initial value) 1 1: Transmit/receive in 7-bit data length*6	R/W*1
b6, b5	—	Reserved	These bits are read as 1. The write value should be 1.	R/W
b7	BCP2	Base Clock Pulse 2	Selects the number of base clock cycles in combination with the SMR.BCP[1:0] bits. Table 28.9 lists the combinations of the SCMR.BCP2 bit and SMR.BCP[1:0] bits.	R/W*1

Note 1. Writable only when the SCR.TE bit is 0 and the SCR.RE bit is 0 (both serial transmission and reception are disabled).
Note 2. This bit can be used in the smart card interface mode, asynchronous mode (multi-processor mode), clock synchronous mode, and simple SPI mode.
Note 3. Set this bit to 0 if operation is to be in simple I²C mode.
Note 4. Set this bit to 1 if operation is to be in simple I²C mode.
Note 5. This bit is only valid in asynchronous mode. The setting is invalid and a fixed data length of 8 bits is used in modes other than asynchronous mode.
Note 6. LSB first should be selected and the value of MSB (b7) in the TDR register cannot be transmitted.

SMIF Bit (Smart Card Interface Mode Select)

When this bit is set to 1, smart card interface mode is selected.

When this bit is set to 0, non-smart card interface mode, i.e., asynchronous mode (including multi-processor mode), clock synchronous mode, simple SPI mode, or simple I²C mode is selected.

SINV Bit (Transmitted/Received Data Invert)

This bit is used to invert the logic level of the data bits when the data is transferred between data register and shift register. This bit does not affect the logic level of the parity bit. To invert the parity bit, invert the SMR.PM bit.

CHR1 Bit (Character Length 1)

Selects the data length of transmit/receive data.

Selects in combination with the SMR.CHR bit.

A fixed data length of 8 bits is used in modes other than asynchronous mode.

BCP2 Bit (Base Clock Pulse 2)

Selects the number of base clock cycles in a 1-bit data transfer time in smart card interface mode. Set this bit in combination with the SMR.BCP[1:0] bits.

Table 28.9 Combinations of the SCMR.BCP2 Bit and SMR.BCP[1:0] Bits

SCMR.BCP2 Bit	SMR.BCP[1:0] Bits		Number of Base Clock Cycles for 1-Bit Transfer Period
0	0	0	93 clock cycles (S = 93)*1
0	0	1	128 clock cycles (S = 128)*1
0	1	0	186 clock cycles (S = 186)*1
0	1	1	512 clock cycles (S = 512)*1
1	0	0	32 clock cycles (S = 32)*1 (Initial Value)
1	0	1	64 clock cycles (S = 64)*1
1	1	0	372 clock cycles (S = 372)*1
1	1	1	256 clock cycles (S = 256)*1

Note 1. S is the value of S in the BRR register (refer to section 28.2.11, Bit Rate Register (BRR)).

28.2.11 Bit Rate Register (BRR)

Address(es): SCI1.BRR 0008 A021h, SCI5.BRR 0008 A0A1h, SCI6.BRR 0008 A0C1h, SCI12.BRR 0008 B301h

	b7	b6	b5	b4	b3	b2	b1	b0
Value after reset:	1	1	1	1	1	1	1	1

The BRR register is an 8-bit register that adjusts the bit rate.
As each SCI channel has independent baud rate generator control, different bit rates can be set for each. Table 28.10 shows the relationship between the setting (N) in the BRR register and the bit rate (B) for normal asynchronous mode, multi-processor communication, clock synchronous mode, smart card interface mode, simple SPI mode, and simple I²C mode.
The BRR register is writable only when the TE and RE bits in the SCR register are 0.

Table 28.10 Relationship between N Setting in the BRR Register and Bit Rate B

Mode	SEMR Settings		BRR Setting	Error (%)
	BGDM bit	ABCS bit		
Asynchronous, multi-processor communication	0	0	$N = \frac{PCLK \times 10^6}{64 \times 2^{2n-1} \times B} - 1$	$Error = \left\{\frac{PCLK \times 10^6}{B \times 64 \times 2^{2n-1} \times (N+1)} - 1\right\} \times 100$
	0	1	$N = \frac{PCLK \times 10^6}{32 \times 2^{2n-1} \times B} - 1$	$Error = \left\{\frac{PCLK \times 10^6}{B \times 32 \times 2^{2n-1} \times (N+1)} - 1\right\} \times 100$
	1	0		
	1	1	$N = \frac{PCLK \times 10^6}{16 \times 2^{2n-1} \times B} - 1$	$Error = \left\{\frac{PCLK \times 10^6}{B \times 16 \times 2^{2n-1} \times (N+1)} - 1\right\} \times 100$
Clock synchronous, simple SPI			$N = \frac{PCLK \times 10^6}{8 \times 2^{2n-1} \times B} - 1$	
Smart card interface			$N = \frac{PCLK \times 10^6}{S \times 2^{2n+1} \times B} - 1$	$Error = \left\{\frac{PCLK \times 10^6}{B \times S \times 2^{2n+1} \times (N+1)} - 1\right\} \times 100$
Simple I²C*1			$N = \frac{PCLK \times 10^6}{64 \times 2^{2n-1} \times B} - 1$	

B: Bit rate (bps)
N: BRR setting for on-chip baud rate generator (0 ≤ N ≤ 255)
PCLK: Operating frequency (MHz)
n and S: Determined by the settings of the SMR and SCMR registers as listed in Table 28.12 and Table 28.13.
Note 1. Adjust the bit rate so that the widths at high and low level of the SCL output in simple I²C mode satisfy the I²C-bus standard.

Table 28.11 Calculating Widths at High and Low Level for SCL

Mode	SCL	Formula (Result in Seconds)
I²C	High period (minimum value)	$(N+1) \times 4 \times 2^{2n-1} \times 7 \times \frac{1}{PCLK \times 10^6}$
	Low period (minimum value)	$(N+1) \times 4 \times 2^{2n-1} \times 8 \times \frac{1}{PCLK \times 10^6}$

Table 28.12 Clock Source Settings

SMR.CKS[1:0] Bit Setting	Clock Source	n
0 0	PCLK	0
0 1	PCLK/4	1
1 0	PCLK/16	2
1 1	PCLK/64	3

Table 28.13 Base Clock Settings in Smart Card Interface Mode

SCMR.BCP2 Bit Setting	SMR.BCP[1:0] Bit Setting	Base Clock Cycles for 1-bit Period	S
0	0 0	93 clock cycles	93
0	0 1	128 clock cycles	128
0	1 0	186 clock cycles	186
0	1 1	512 clock cycles	512
1	0 0	32 clock cycles	32
1	0 1	64 clock cycles	64
1	1 0	372 clock cycles	372
1	1 1	256 clock cycles	256

Table 28.14 lists examples of N settings in the BRR register in normal asynchronous mode. Table 28.15 lists the maximum bit rate settable for each operating frequency. Examples of BRR (N) settings in clock synchronous mode and simple SPI mode are listed in Table 28.18. Examples of BRR (N) settings in smart card interface mode are listed in Table 28.20. Examples of BRR (N) settings in simple I^2C mode are listed in Table 28.22. In smart card interface mode, the number of base clock cycles S in a 1-bit data transfer time can be selected. For details, refer to section 28.6.4, Receive Data Sampling Timing and Reception Margin. Table 28.16 and Table 28.19 list the maximum bit rates with external clock input.

When either the SEMR.ABCS or BGDM bit is set to 1 in asynchronous mode, the bit rate becomes twice that listed in Table 28.14. When both of those bits are set to 1, the bit rate becomes four times the listed value.

Table 28.14 Examples of BRR Settings for Various Bit Rates (Asynchronous Mode)

Bit Rate (bps)	Operating Frequency PCLK (MHz)														
	8			9.8304			10			12			12.288		
	n	N	Error (%)	n	N	Error (%)	n	N	Error (%)	n	N	Error (%)	n	N	Error (%)
110	2	141	0.03	2	174	–0.26	2	177	–0.25	2	212	0.03	2	217	0.08
150	2	103	0.16	2	127	0.00	2	129	0.16	2	155	0.16	2	159	0.00
300	1	207	0.16	1	255	0.00	2	64	0.16	2	77	0.16	2	79	0.00
600	1	103	0.16	1	127	0.00	1	129	0.16	1	155	0.16	1	159	0.00
1200	0	207	0.16	0	255	0.00	1	64	0.16	1	77	0.16	1	79	0.00
2400	0	103	0.16	0	127	0.00	0	129	0.16	0	155	0.16	0	159	0.00
4800	0	51	0.16	0	63	0.00	0	64	0.16	0	77	0.16	0	79	0.00
9600	0	25	0.16	0	31	0.00	0	32	–1.36	0	38	0.16	0	39	0.00
19200	0	12	0.16	0	15	0.00	0	15	1.73	0	19	–2.34	0	19	0.00
31250	0	7	0.00	0	9	–1.70	0	9	0.00	0	11	0.00	0	11	2.40
38400	—	—	—	0	7	0.00	0	7	1.73	0	9	–2.34	0	9	0.00

Bit Rate (bps)	Operating Frequency PCLK (MHz)														
	14			16			17.2032			18			19.6608		
	n	N	Error (%)	n	N	Error (%)	n	N	Error (%)	n	N	Error (%)	n	N	Error (%)
110	2	248	–0.17	3	70	0.03	3	75	0.48	3	79	–0.12	3	86	0.31
150	2	181	0.16	2	207	0.16	2	223	0.00	2	233	0.16	2	255	0.00
300	2	90	0.16	2	103	0.16	2	111	0.00	2	116	0.16	2	127	0.00
600	1	181	0.16	1	207	0.16	1	223	0.00	1	233	0.16	1	255	0.00
1200	1	90	0.16	1	103	0.16	1	111	0.00	1	116	0.16	1	127	0.00
2400	0	181	0.16	0	207	0.16	0	223	0.00	0	233	0.16	0	255	0.00
4800	0	90	0.16	0	103	0.16	0	111	0.00	0	116	0.16	0	127	0.00
9600	0	45	–0.93	0	51	0.16	0	55	0.00	0	58	–0.69	0	63	0.00
19200	0	22	–0.93	0	25	0.16	0	27	0.00	0	28	1.02	0	31	0.00
31250	0	13	0.00	0	15	0.00	0	16	1.20	0	17	0.00	0	19	–1.70
38400	—	—	—	0	12	0.16	0	13	0.00	0	14	–2.34	0	15	0.00

Bit Rate (bps)	Operating Frequency PCLK (MHz)								
	20			25			30		
	n	N	Error (%)	n	N	Error (%)	n	N	Error (%)
110	3	88	–0.25	3	110	–0.02	3	132	0.13
150	3	64	0.16	3	80	0.47	3	97	–0.35
300	2	129	0.16	2	162	–0.15	2	194	0.16
600	2	64	0.16	2	80	0.47	2	97	–0.35
1200	1	129	0.16	1	162	–0.15	1	194	0.16
2400	1	64	0.16	1	80	0.47	1	97	–0.35
4800	0	129	0.16	0	162	–0.15	0	194	0.16
9600	0	64	0.16	0	80	0.47	0	97	–0.35
19200	0	32	–1.36	0	40	–0.76	0	48	–0.35
31250	0	19	0.00	0	24	0.00	0	29	0.00
38400	0	15	1.73	0	19	1.73	0	23	1.73

Note: This is an example when the ABCS and BGDM bits in the SEMR register are 0.
When either the ABCS bit or BGDM bit is set to 1, the bit rate doubles.
When both ABCS and BGDM bits in the SEMR register are set to 1, the bit rate increases four times.

Table 28.15 Maximum Bit Rate for Each Operating Frequency (Asynchronous Mode)

PCLK (MHz)	SEMR Settings BGDM Bit	ABCS Bit	n	N	Maximum Bit Rate (bps)	PCLK (MHz)	SEMR Settings BGDM Bit	ABCS Bit	n	N	Maximum Bit Rate (bps)
8	0	0	0	0	250000	9.8304	0	0	0	0	307200
		1	0	0	500000			1	0	0	614400
	1	0	0	0			1	0	0	0	
		1	0	0	1000000			1	0	0	1228800
10	0	0	0	0	312500	12	0	0	0	0	375000
		1	0	0	625000			1	0	0	750000
	1	0	0	0			1	0	0	0	
		1	0	0	1250000			1	0	0	1500000
12.288	0	0	0	0	384000	14	0	0	0	0	437500
		1	0	0	768000			1	0	0	875000
	1	0	0	0			1	0	0	0	
		1	0	0	1536000			1	0	0	1750000
16	0	0	0	0	500000	17.2032	0	0	0	0	537600
		1	0	0	1000000			1	0	0	1075200
	1	0	0	0			1	0	0	0	
		1	0	0	2000000			1	0	0	2150400
18	0	0	0	0	562500	19.6608	0	0	0	0	614400
		1	0	0	1125000			1	0	0	1228800
	1	0	0	0			1	0	0	0	
		1	0	0	2250000			1	0	0	2457600
20	0	0	0	0	625000	25	0	0	0	0	781250
		1	0	0	1250000			1	0	0	1562500
	1	0	0	0			1	0	0	0	
		1	0	0	2500000			1	0	0	3125000
30	0	0	0	0	937500						
		1	0	0	1875000						
	1	0	0	0							
		1	0	0	3750000						

Table 28.16 Maximum Bit Rate with External Clock Input (Asynchronous Mode)

		Maximum Bit Rate (bps)	
PCLK (MHz)	External Input Clock (MHz)	SEMR.ABCS Bit = 0	SEMR.ABCS Bit = 1
8	2.0000	125000	250000
9.8304	2.4576	153600	307200
10	2.5000	156250	312500
12	3.0000	187500	375000
12.288	3.0720	192000	384000
14	3.5000	218750	437500
16	4.0000	250000	500000
17.2032	4.3008	268800	537600
18	4.5000	281250	562500
19.6608	4.9152	307200	614400
20	5.0000	312500	625000
25	6.2500	390625	781250
30	7.5000	468750	937500

Table 28.17 Maximum Bit Rate with TMR Clock Input (Asynchronous Mode)

		Maximum Bit Rate (bps)	
PCLK (MHz)	TMR Clock (MHz)	SEMR.ABCS Bit = 0	SEMR.ABCS Bit = 1
8	4	250000	500000
9.8304	4.9152	307200	614400
10	5	312500	625000
12	6	375000	750000
12.288	6.144	384000	768000
14	7	437500	875000
16	8	500000	1000000
17.2032	8.6016	537600	1075200
18	9	562500	1125000
19.6608	9.8304	614400	1228800
20	10	625000	1250000
25	12.5	781250	1562500
30	15	937500	1875000

Table 28.18 BRR Settings for Various Bit Rates (Clock Synchronous Mode, Simple SPI Mode)

	Operating Frequency PCLK (MHz)											
	8		10		16		20		25		30	
Bit Rate (bps)	n	N	n	N	n	N	n	N	n	N	n	N
110												
250	3	124	3	155	3	249						
500	2	249	3	77	3	124	3	155	3	194	3	233
1 k	2	124	2	155	2	249	3	77	3	97	3	116
2.5 k	1	199	1	249	2	99	2	124	2	155	2	187
5 k	1	99	1	124	1	199	1	249	2	77	2	93
10 k	0	199	0	249	1	99	1	124	1	155	1	187
25 k	0	79	0	99	0	159	0	199	0	249	1	74
50 k	0	39	0	49	0	79	0	99	0	124	0	149
100 k	0	19	0	24	0	39	0	49	0	62	0	74
250 k	0	7	0	9	0	15	0	19	0	24	0	29
500 k	0	3	0	4	0	7	0	9	—	—	0	14
1 M	0	1			0	3	0	4	—	—		
2 M	0	0*1			0	1			—	—		
2.5 M			0	0*1			0	1			0	2
4 M					0	0*1						
5 M							0	0*1				
6.25 M									0	0*1		
7.5 M											0	0*1

Blank cell: Cannot be set since the bit rate error exceeds 5%.

—: Can be set, but a bit rate error of 1 to 5% will occur.

Note 1. Continuous transmission or reception is not possible. After transmitting/receiving one frame of data, there is an interval of a 1-bit period before starting transmitting/receiving the next frame of data. The output of the synchronization clock is stopped for a 1-bit period. For this reason, it takes 9 bits worth of time to transfer one frame (8 bits) of data, and the average transfer rate is 8/9 times the bit rate.

Table 28.19 Maximum Bit Rate with External Clock Input (Clock Synchronous Mode, Simple SPI Mode)

PCLK (MHz)	External Input Clock (MHz)	Maximum Bit Rate (Mbps)
8	1.3333	1.3333
10	1.6667	1.6667
12	2.0000	2.0000
14	2.3333	2.3333
16	2.6667	2.6667
18	3.0000	3.0000
20	3.3333	3.3333
25	4.1667	4.1667
30	5.0000	5.0000

Table 28.20 BRR Settings for Various Bit Rates (Smart Card Interface Mode, n = 0, S = 372)

Bit Rate (bps)	PCLK (MHz)	n	N	Error (%)
9600	7.1424	0	0	0.00
	10.00	0	1	–30.00
	10.7136	0	1	–25.00
	13.00	0	1	–8.99
	14.2848	0	1	0.00
	16.00	0	1	12.01
	18.00	0	2	–15.99
	20.00	0	2	–6.66
	25.00	0	3	–12.49
	30.00	0	3	5.01

Table 28.21 Maximum Bit Rate for Each Operating Frequency (Smart Card Interface Mode, S = 32)

PCLK (MHz)	Maximum Bit Rate (bps)	n	N
10.00	156250	0	0
10.7136	167400	0	0
13.00	203125	0	0
16.00	250000	0	0
18.00	281250	0	0
20.00	312500	0	0
25.00	390625	0	0
30.00	468750	0	0

Table 28.22 BRR Settings for Various Bit Rates (Simple I²C Mode)

Bit Rate (bps)	Operating Frequency PCLK (MHz)														
	8			10			16			20			25		
	n	N	Error (%)	n	N	Error (%)	n	N	Error (%)	n	N	Error (%)	n	N	Error (%)
10 k	0	24	0.0	0	30	0.8	0	49	0.0	0	62	–0.8	0	77	0.2
25 k	0	9	0.0	0	12	–3.8	1	4	0.0	0	24	0.0	0	30	0.8
50 k	0	4	0.0	0	5	4.2	0	9	0.0	0	12	–3.8	2	0	–2.3
100 k	0	2	–16.7	1	0	–21.9	0	4	0.0	0	6	–10.7	1	1	–2.3
250 k	0	0	0.0	0	0	25.0	0	1	0.0	0	2	–16.7	0	2	4.2
350 k										0	1	–10.7	0	2	–25.6

Bit Rate (bps)	Operating Frequency PCLK (MHz)		
	30		
	n	N	Error (%)
10 k	0	93	–0.3
25 k	0	37	–1.3
50 k	0	18	–1.3
100 k	0	9	–6.3
250 k	1	0	–6.3
350 k	0	2	–10.7

Table 28.23 Minimum Widths at High and Low Level for SCL at Various Bit Rates (Simple I²C Mode)

Bit Rate (bps)	Operating Frequency PCLK (MHz)											
	8			10			16			20		
	n	N	Min. Widths at High/Low Level for SCL (μs)	n	N	Min. Widths at High/Low Level for SCL (μs)	n	N	Min. Widths at High/Low Level for SCL (μs)	n	N	Min. Widths at High/Low Level for SCL (μs)
10 k	0	24	43.75/50.00	0	30	43.40/49.60	0	49	43.75/50.00	0	62	44.10/50.40
25 k	0	9	17.50/20.00	0	12	18.20/20.80	1	4	17.50/20.00	0	24	17.50/20.00
50 k	0	4	8.75/10.00	0	5	8.40/9.60	0	9	8.75/10.00	0	12	9.10/10.40
100 k	0	2	5.25/6.00	1	0	5.60/6.40	0	4	4.38/5.00	0	6	4.90/5.60
250 k	0	0	1.75/2.00	0	0	1.40/1.60	0	1	1.75/2.00	0	2	2.10/2.40
350 k										0	1	1.40/1.60

Bit Rate (bps)	Operating Frequency PCLK (MHz)					
	25			30		
	n	N	Min. Widths at High/Low Level for SCL (μs)	n	N	Min. Widths at High/Low Level for SCL (μs)
10 k	0	77	43.68/49.92	0	93	43.87/50.13
25 k	0	30	17.36/19.84	0	37	17.73/20.27
50 k	2	0	8.96/10.24	0	18	8.87/10.13
100 k	1	1	4.48/5.12	0	9	4.67/5.33
250 k	0	2	1.68/1.92	1	0	1.87/2.13
350 k	0	2	1.68/1.92	0	2	1.40/1.60

28.2.12 Modulation Duty Register (MDDR)

Address(es): SCI1.MDDR 0008 A032h, SCI5.MDDR 0008 A0B2h, SCI6.MDDR 0008 A0D2h, SCI12.MDDR 0008 B312h

	b7	b6	b5	b4	b3	b2	b1	b0
Value after reset:	1	1	1	1	1	1	1	1

The MDDR register corrects the bit rate adjusted by the BRR register.
When the SEMR.BRME bit is set to 1, the bit rate generated by the on-chip baud rate generator is evenly corrected according to the settings of the MDDR register (M/256). The relationship between the MDDR register setting (M) and the bit rate (B) is given in Table 28.24.
The range of the value that can be set in the MDDR register is from 80h to FFh. A value other than these cannot be set.
The MDDR register is writable only when the TE and RE bits in the SCR register are 0.

Table 28.24 Relationship between MDDR Setting (M) and Bit Rate (B) When Bit Rate Modulation Function is Used

Mode	SEMR Settings		BRR Setting	Error (%)
	BGDM Bit	ABCS Bit		
Asynchronous, multi-processor communication	0	0	$N = \frac{PCLK \times 10^6}{64 \times 2^{2n-1} \times \frac{256}{M} \times B} - 1$	$Error = \left\{ \frac{PCLK \times 10^6}{B \times 64 \times 2^{2n-1} \times \frac{256}{M} \times (N+1)} - 1 \right\} \times 100$
	1	0	$N = \frac{PCLK \times 10^6}{32 \times 2^{2n-1} \times \frac{256}{M} \times B} - 1$	$Error = \left\{ \frac{PCLK \times 10^6}{B \times 32 \times 2^{2n-1} \times \frac{256}{M} \times (N+1)} - 1 \right\} \times 100$
	0	1		
	1	1	$N = \frac{PCLK \times 10^6}{16 \times 2^{2n-1} \times \frac{256}{M} \times B} - 1$	$Error = \left\{ \frac{PCLK \times 10^6}{B \times 16 \times 2^{2n-1} \times \frac{256}{M} \times (N+1)} - 1 \right\} \times 100$
Clock synchronous, simple SPI*1			$N = \frac{PCLK \times 10^6}{8 \times 2^{2n-1} \times \frac{256}{M} \times B} - 1$	
Smart card interface			$N = \frac{PCLK \times 10^6}{S \times 2^{2n+1} \times \frac{256}{M} \times B} - 1$	$Error = \left\{ \frac{PCLK \times 10^6}{B \times S \times 2^{2n+1} \times \frac{256}{M} \times (N+1)} - 1 \right\} \times 100$
Simple I²C*2			$N = \frac{PCLK \times 10^6}{64 \times 2^{2n-1} \times \frac{256}{M} \times B} - 1$	

B: Bit rate (bps)
M: MDDR setting (128 ≤ MDDR ≤ 256)
N: BRR setting for baud rate generator (0 ≤ N ≤ 255)
PCLK: Operating frequency (MHz)
n and S: Determined by the settings of the SMR and SCMR registers as listed in Table 28.12 and Table 28.13, section 28.2.11, Bit Rate Register (BRR).

Note 1. Do not use this function in clock synchronous mode and in the highest speed settings in simple SPI mode (SMR.CKS[1:0] = 00b, SCR.CKE[1] = 0, and BRR = 0).
Note 2. Adjust the bit rate so that the widths at high and low level of the SCL output in simple I²C mode satisfy the I²C-bus standard.

Smaller settings of the SMR.CKS[1:0] bits and larger settings of the BRR register reduce difference in the length of the 1-bit period.

28.2.13 Serial Extended Mode Register (SEMR)

Address(es): SCI1.SEMR 0008 A027h, SCI5.SEMR 0008 A0A7h, SCI6.SEMR 0008 A0C7h, SCI12.SEMR 0008 B307h

	b7	b6	b5	b4	b3	b2	b1	b0
	RXDESEL	BGDM	NFEN	ABCS	—	BRME	—	ACS0
Value after reset:	0	0	0	0	0	0	0	0

Bit	Symbol	Bit Name	Description	R/W
b0	ACS0	Asynchronous Mode Clock Source Select	(Valid only in asynchronous mode) 0: External clock input 1: Logical AND of two compare matches output from TMR (valid for SCI5, SCI6, and SCI12 only) Available compare match output varies per SCI channel.	R/W*1
b1	—	Reserved	This bit is read as 0. The write value should be 0.	R/W
b2	BRME	Bit Rate Modulation Enable	0: Bit rate modulation function is disabled. 1: Bit rate modulation function is enabled.	R/W*1
b3	—	Reserved	This bit is read as 0. The write value should be 0.	R/W
b4	ABCS	Asynchronous Mode Base Clock Select	(Valid only in asynchronous mode) 0: Selects 16 base clock cycles for 1-bit period. 1: Selects 8 base clock cycles for 1-bit period.	R/W*1
b5	NFEN	Digital Noise Filter Function Enable	(In asynchronous mode) 0: Noise cancellation function for the RXDn input signal is disabled. 1: Noise cancellation function for the RXDn input signal is enabled. (in simple I^2C mode) 0: Noise cancellation function for the SSCLn and SSDAn input signals is disabled. 1: Noise cancellation function for the SSCLn and SSDAn input signals is enabled. The NFEN bit should be 0 in any mode other than above.	R/W*1
b6	BGDM	Baud Rate Generator Double-Speed Mode Select	(Only valid the SCR.CKE[1] bit is 0 in asynchronous mode) 0: Baud rate generator outputs the clock with normal frequency. 1: Baud rate generator outputs the clock with doubled frequency.	R/W*1
b7	RXDESEL	Asynchronous Start Bit Edge Detection Select	(Valid only in asynchronous mode) 0: The low level on the RXDn pin is detected as the start bit. 1: A falling edge on the RXDn pin is detected as the start bit.	R/W*1

Note 1. Writable only when the SCR.TE bit is 0 and the SCR.RE bit is 0 (both serial transmission and reception are disabled).

The SEMR register is used to select a clock source for 1-bit period in asynchronous mode or a detection method of the start bit.

ACS0 Bit (Asynchronous Mode Clock Source Select)

Selects the clock source in the asynchronous mode.

The ACS0 bit is valid in asynchronous mode (SMR.CM bit = 0) and when an external clock input is selected (SCR.CKE[1:0] bits = 10b or 11b). This bit is used to select an external clock input or the logical AND of compare matches output from the internal TMR.

Set the ACS0 bit to 0 in other than asynchronous mode.

For SCI5, SCI6, and SCI12, the TMOn output (n = 0 to 3) of TMR units 0 and 1 can be set as the base clock source. Refer to Table 28.25 for details.

The ACS0 bit for SCI1 is reserved. The write value to this bit for SCI1 should be 0.

Table 28.25 Correspondence between SCI Channels and Compare Match Outputs

SCI	TMR	Compare Match Output
SCI5	Unit 0	TMO0, TMO1
SCI6	Unit 1	TMO2, TMO3
SCI12	Unit 0	TMO0, TMO1

Figure 28.4 shows a setting example of when TMO0 and TMO1 in the TMR unit 0 are selected for output.

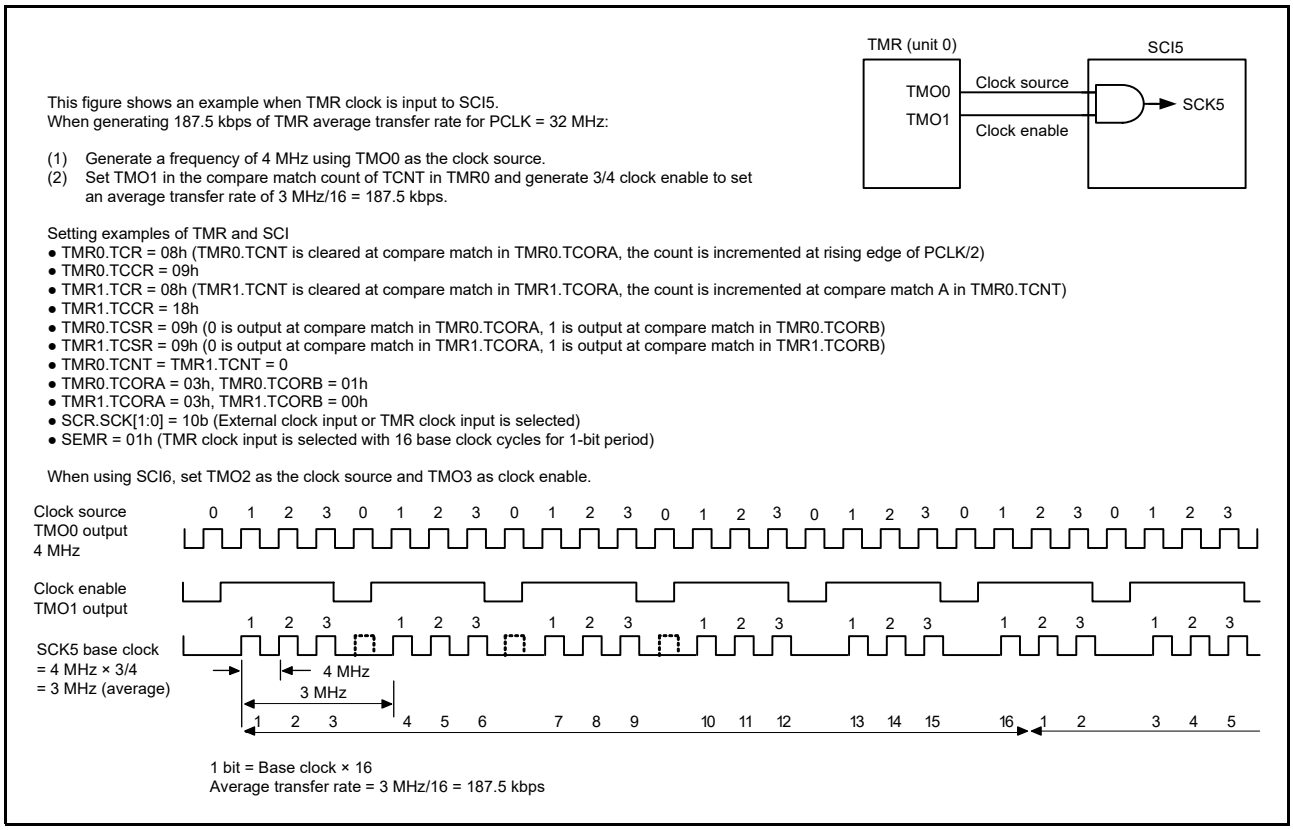

Figure 28.4 Example of Average Transfer Rate Setting When TMR Clock is Input

BRME Bit (Bit Rate Modulation Enable)

This bit enables and disables the bit rate modulation function. The bit rate generated by on-chip baud rate generator is evenly corrected when this function is enabled.

NFEN Bit (Digital Noise Filter Function Enable)

This bit enables or disables the digital noise filter function.
When the function is enabled, noise cancellation is applied to the RXDn input signal in asynchronous mode, and noise cancellation is applied to the SSDAn and SSCLn input signals in simple I^2C mode.
In any mode other than above, set the NFEN bit to 0 to disable the digital noise filter function.
When the function is disabled, input signals are transferred as is, as internal signals.

BGDM Bit (Baud Rate Generator Double-Speed Mode Select)

Selects the cycle of output clock for the baud rate generator.
This bit is valid when the on-chip baud rate generator is selected as the clock source (SCR.CKE[1] = 0) in asynchronous mode (SMR.CM = 0). For the clock output from the baud rate generator, either normal or doubled frequency can be selected. The base clock is generated by the clock output from the baud rate generator. When the BGDM bit is set to 1, the base clock cycle is halved and the bit rate is doubled.
Set this bit to 0 in modes other than asynchronous mode.

RXDESEL Bit (Asynchronous Start Bit Edge Detection Select)

Selects the detection method of the start bit for reception in asynchronous mode. When a break occurs, data receiving operation depends on the settings of this bit. Set this bit to 1 when reception should be stopped while a break occurs or when reception should be started without retaining the RXDn pin input at high level for the period of one data frame or longer after completion of the break.
Set this bit to 0 in modes other than asynchronous mode.

28.2.14 Noise Filter Setting Register (SNFR)

Address(es): SCI1.SNFR 0008 A028h, SCI5.SNFR 0008 A0A8h, SCI6.SNFR 0008 A0C8h, SCI12.SNFR 0008 B308h

	b7	b6	b5	b4	b3	b2	b1	b0
	—	—	—	—	—	NFCS[2:0]		
Value after reset:	0	0	0	0	0	0	0	0

Bit	Symbol	Bit Name	Description	R/W
b2 to b0	NFCS[2:0]	Noise Filter Clock Select	In asynchronous mode, the standard setting for the base clock is as follows. b2 b0 0 0 0: The clock signal divided by 1 is used with the noise filter. In simple I²C mode, the standard settings for the clock source of the on-chip baud rate generator selected by the SMR.CKS[1:0] bits are given below. b2 b0 0 0 1: The clock signal divided by 1 is used with the noise filter. 0 1 0: The clock signal divided by 2 is used with the noise filter. 0 1 1: The clock signal divided by 4 is used with the noise filter. 1 0 0: The clock signal divided by 8 is used with the noise filter. Settings other than above are prohibited.	R/W*1
b7 to b3	—	Reserved	These bits are read as 0. The write value should be 0.	R/W

Note 1. Writing to these bits is only possible when the RE and TE bits in the SCR register are 0 (serial reception and transmission disabled).

NFCS[2:0] Bits (Noise Filter Clock Select)

These bits select the sampling clock for the digital noise filter. To use the noise filter in asynchronous mode, set these bits to 000b. In simple I^2C mode, set the bits to a value in the range from 001b to 100b.

28.2.15 I²C Mode Register 1 (SIMR1)

Address(es): SCI1.SIMR1 0008 A029h, SCI5.SIMR1 0008 A0A9h, SCI6.SIMR1 0008 A0C9h, SCI12.SIMR1 0008 B309h

	b7	b6	b5	b4	b3	b2	b1	b0
	IICDL[4:0]					—	—	IICM
Value after reset:	0	0	0	0	0	0	0	0

Bit	Symbol	Bit Name	Description	R/W
b0	IICM	Simple I²C Mode Select	SMIF IICM 0 0: Asynchronous mode, Multi-processor mode, Clock synchronous mode (in asynchronous mode, synchronous, or simple SPI mode) 0 1: Simple I²C mode 1 0: Smart card interface mode 1 1: Setting prohibited.	R/W*1
b2, b1	—	Reserved	These bits are read as 0. The write value should be 0.	R/W
b7 to b3	IICDL[4:0]	SSDA Output Delay Select	(Cycles below are of the clock signal from the on-chip baud rate generator.) b7 b3 0 0 0 0 0: No output delay 0 0 0 0 1: 0 to 1 cycle 0 0 0 1 0: 1 to 2 cycles 0 0 0 1 1: 2 to 3 cycles 0 0 1 0 0: 3 to 4 cycles 0 0 1 0 1: 4 to 5 cycles : : 1 1 1 1 0: 29 to 30 cycles 1 1 1 1 1: 30 to 31 cycles	R/W*1

Note 1. Writing to these bits is only possible when the RE and TE bits in the SCR register are 0 (both serial transmission and reception are disabled).

SIMR1 is used to select simple I²C mode and the number of delay stages for the SSDA output.

IICM Bit (Simple I²C Mode Select)

In conjunction with the SCMR.SMIF bit, this bit selects the operating mode.

IICDL[4:0] Bits (SSDA Output Delay Select)

These bits are used to set a delay for output on the SSDAn pin relative to the falling edge of the output on the SSCLn pin. The available delay settings range from no delay to 31 cycles, with the clock signal from the on-chip baud rate generator as the base. The signal obtained by frequency-dividing PCLK by the divisor set in the SMR.CKS[1:0] bits is supplied as the clock signal from the on-chip baud rate generator. Set these bits to 00000b unless operation is in simple I²C mode. In simple I²C mode, set the bits to a value in the range from 00001b to 11111b.

28.2.16 I²C Mode Register 2 (SIMR2)

Address(es): SCI1.SIMR2 0008 A02Ah, SCI5.SIMR2 0008 A0AAh, SCI6.SIMR2 0008 A0CAh, SCI12.SIMR2 0008 B30Ah

	b7	b6	b5	b4	b3	b2	b1	b0
	—	—	IICACKT	—	—	—	IICCSC	IICINTM
Value after reset:	0	0	0	0	0	0	0	0

Bit	Symbol	Bit Name	Description	R/W
b0	IICINTM	I²C Interrupt Mode Select	0: Use ACK/NACK interrupts. 1: Use reception and transmission interrupts.	R/W*1
b1	IICCSC	Clock Synchronization	0: No synchronization with the clock signal 1: Synchronization with the clock signal	R/W*1
b4 to b2	—	Reserved	These bits are read as 0. The write value should be 0.	R/W
b5	IICACKT	ACK Transmission Data	0: ACK transmission 1: NACK transmission and reception of ACK/NACK	R/W
b7, b6	—	Reserved	These bits are read as 0. The write value should be 0.	R/W

Note 1. Writing to these bits is only possible when the RE and TE bits in the SCR register are 0 (serial reception and transmission disabled).

SIMR2 is used to select how reception and transmission are controlled in simple I²C mode.

IICINTM Bit (I²C Interrupt Mode Select)

This bit selects the sources of interrupt requests in simple I²C mode.

IICCSC Bit (Clock Synchronization)

Set the IICCSC bit to 1 if the internally generated SSCLn clock signal is to be synchronized when the SSCLn pin has been placed at the low level in the case of a wait inserted by the other device, etc.
The SSCLn clock signal is not synchronized if the IICCSC bit is 0. The SSCLn clock signal is generated in accord with the rate selected in the BRR regardless of the level being input on the SSCLn pin.
Set the IICCSC bit to 1 except during debugging.

IICACKT Bit (ACK Transmission Data)

Transmitted data contains ACK bits. Set this bit to 1 when ACK and NACK bits are received.

28.2.17 I²C Mode Register 3 (SIMR3)

Address(es): SCI1.SIMR3 0008 A02Bh, SCI5.SIMR3 0008 A0ABh, SCI6.SIMR3 0008 A0CBh, SCI12.SIMR3 0008 B30Bh

	b7	b6	b5	b4	b3	b2	b1	b0
	IICSCLS[1:0]		IICSDAS[1:0]		IICSTIF	IICSTP REQ	IICRST AREQ	IICSTA REQ
Value after reset:	0	0	0	0	0	0	0	0

Bit	Symbol	Bit Name	Description	R/W
b0	IICSTAREQ	Start Condition Generation	0: A start condition is not generated. 1: A start condition is generated.*1, *3, *4, *5	R/W
b1	IICRSTAREQ	Restart Condition Generation	0: A restart condition is not generated. 1: A restart condition is generated.*2, *3, *4, *5	R/W
b2	IICSTPREQ	Stop Condition Generation	0: A stop condition is not generated. 1: A stop condition is generated.*2, *3, *4, *5	R/W
b3	IICSTIF	Issuing of Start, Restart, or Stop Condition Completed Flag	0: There are no requests for generating conditions or a condition is being generated. 1: A start, restart, or stop condition is completely generated.	R/W
b5, b4	IICSDAS[1:0]	SSDA Output Select	b5 b4 0 0: Serial data output 0 1: Generate a start, restart, or stop condition. 1 0: Output the low level on the SSDAn pin. 1 1: Place the SSDAn pin in the high-impedance state.	R/W
b7, b6	IICSCLS[1:0]	SSCL Output Select	b7 b6 0 0: Serial clock output 0 1: Generate a start, restart, or stop condition. 1 0: Output the low level on the SSCLn pin. 1 1: Place the SSCLn pin in the high-impedance state.	R/W

Note 1. Generate a start condition only when the SSCLn and SSDAn pins are both high (the corresponding bits in the corresponding PIDR registers are 1).
Note 2. Generate a restart or stop condition only when the SSCLn pin is low (the corresponding bit in the PIDR register is 0).
Note 3. Do not set more than one from among the IICSTAREQ, IICRSTAREQ, and IICSTPREQ bits to 1 at a given time.
Note 4. Execute the generation of a condition after the value of the IICSTIF flag is 0.
Note 5. Do not write 0 to this bit while it is 1. Generation of a condition is suspended by writing 0 to this bit while it is 1.

SIMR3 is used to control the simple I²C mode start and stop conditions, and to hold the SSDAn and SSCLn pins at fixed levels.

IICSTAREQ Bit (Start Condition Generation)

When a start condition is to be generated, set both the IICSDAS[1:0] and IICSCLS[1:0] bits to 01b as well as setting the IICSTAREQ bit to 1.

[Setting condition]

- Writing 1 to the bit

[Clearing condition]

- Completion of generation of the start condition

IICRSTAREQ Bit (Restart Condition Generation)

When a restart condition is to be generated, set both the IICSDAS[1:0] and IICSCLS[1:0] bits to 01b as well as setting the IICRSTAREQ bit to 1.

[Setting condition]

- Writing 1 to the bit

[Clearing condition]

- Completion of generation of the restart condition

IICSTPREQ Bit (Stop Condition Generation)

When a stop condition is to be generated, set both the IICSDAS[1:0] and IICSCLS[1:0] bits to 01b as well as setting the IICSTPREQ bit to 1.

[Setting condition]

- Writing 1 to the bit

[Clearing condition]

- Completion of generation of the stop condition

IICSTIF Flag (Issuing of Start, Restart, or Stop Condition Completed Flag)

After generating a condition, this bit indicates that the generation is completed. When using the IICSTAREQ, IICRSTAREQ, or IICSTPREQ bit to cause generation of a condition, do so after setting the IICSTIF flag to 0.

When the IICSTIF flag is 1 while an interrupt request is enabled by setting the SCR.TEIE bit, an STI request is output.

[Setting condition]

- Completion of the generation of a start, restart, or stop condition (however, in cases where this conflicts with any of the conditions for the flag becoming 0 listed below, the other condition takes precedence)

[Clearing conditions]

- Writing 0 to the bit (confirm that the IICSTIF flag is 0 before doing so)
- Writing 0 to the SIMR1.IICM bit (when operation is not in simple I^2C mode)
- Writing 0 to the SCR.TE bit

IICSDAS[1:0] Bits (SSDA Output Select)

These bits control output from the SSDAn pin.

Set the IICSDAS[1:0] and IICSCLS[1:0] bits to the same value during normal operations.

IICSCLS[1:0] Bits (SSCL Output Select)

These bits control output from the SSCLn pin.

Set the IICSCLS[1:0] and IICSDAS[1:0] bits to the same value during normal operations.

28.2.18 I2C Status Register (SISR)

Address(es): SCI1.SISR 0008 A02Ch, SCI5.SISR 0008 A0ACh, SCI6.SISR 0008 A0CCh, SCI12.SISR 0008 B30Ch

	b7	b6	b5	b4	b3	b2	b1	b0
	—	—	—	—	—	—	—	IICACKR
Value after reset:	0	0	x	x	0	x	0	0

x: Undefined

Bit	Symbol	Bit Name	Description	R/W
b0	IICACKR	ACK Reception Data Flag	0: ACK received 1: NACK received	R/W*1
b1	—	Reserved	This bit is read as 0. The write value should be 0.	R/W
b2	—	Reserved	The read value is undefined.	R
b3	—	Reserved	This bit is read as 0. The write value should be 0.	R/W
b5, b4	—	Reserved	The read value is undefined.	R
b7, b6	—	Reserved	These bits are read as 0. The write value should be 0.	R/W

Note 1. Only 0 can be written to this bit, to clear the flag.

SISR is used to monitor state in relation to simple I2C mode.

IICACKR Flag (ACK Reception Data Flag)

Received ACK and NACK bits can be read from this bit.

The IICACKR flag is updated at the rising of SSCLn clock for the ACK/NACK receiving bit.

28.2.19 SPI Mode Register (SPMR)

Address(es): SCI1.SPMR 0008 A02Dh, SCI5.SPMR 0008 A0ADh, SCI6.SPMR 0008 A0CDh, SCI12.SPMR 0008 B30Dh

	b7	b6	b5	b4	b3	b2	b1	b0
	CKPH	CKPOL	—	MFF	—	MSS	CTSE	SSE
Value after reset:	0	0	0	0	0	0	0	0

Bit	Symbol	Bit Name	Description	R/W
b0	SSE	SSn# Pin Function Enable	0: SSn# pin function is disabled. 1: SSn# pin function is enabled.	R/W*1
b1	CTSE	CTS Enable	0: CTS function is disabled (RTS output function is enabled). 1: CTS function is enabled.	R/W*1
b2	MSS	Master Slave Select	0: Transmission is through the SMOSIn pin and reception is through the SMISOn pin (master mode). 1: Reception is through the SMOSIn pin and transmission is through the SMISOn pin (slave mode).	R/W*1
b3	—	Reserved	This bit is read as 0. The write value should be 0.	R/W
b4	MFF	Mode Fault Flag	0: No mode fault error 1: Mode fault error	R/W*2
b5	—	Reserved	This bit is read as 0. The write value should be 0.	R/W
b6	CKPOL	Clock Polarity Select	0: Clock polarity is not inverted. 1: Clock polarity is inverted.	R/W*1
b7	CKPH	Clock Phase Select	0: Clock is not delayed. 1: Clock is delayed.	R/W*1

Note 1. Writing to these bits is only possible when the RE and TE bits in the SCR register are 0 (both serial transmission and reception are disabled).
Note 2. Only 0 can be written to these bits, which clears the flag.

SPMR is used to select the extension settings in asynchronous and clock synchronous modes.

SSE Bit (SSn# Pin Function Enable)

Set this bit to 1 if the SSn# pin is to be used in control of transmission and reception (in simple SPI mode). Set this bit to 0 in any other mode. Furthermore, even for usage in simple SPI mode, the SSn# pin on the master side is not required to control reception and transmission when master mode (SCR.CKE[1:0] = 00b and MSS = 0) is selected and there is a single master, so the setting for the SSE bit is 0. Do not set both the SSE and CTSE bits to enabled (even if this setting is made, operation is the same as that when these bits are set to 0).

CTSE Bit (CTS Enable)

Set this bit to 1 if the SSn# pin is to be used for inputting of the CTS control signal to control of transmission and reception. The RTS signal is output when this bit is set to 0. Set this bit to 0 in smart card interface mode, simple SPI mode, and simple I^2C mode. Do not set both the CTSE and SSE bits to enabled (even if this setting is made, operation is the same as that when these bits are set to 0).

MSS Bit (Master Slave Select)

This bit selects between master and slave operation in simple SPI mode. When the MSS bit is set to 1, data is received through the SMOSIn pin and transmitted through the SMISOn pin.
Set this bit to 0 in modes other than simple SPI mode.

MFF Flag (Mode Fault Flag)

This bit indicates mode fault errors.
In a multi-master configuration, determine the mode fault error occurrence by reading the MFF flag.
[Setting condition]

- Input on the SSn# pin being at the low level during master operation in simple SPI mode (SSE bit = 1 and MSS bit = 0)

[Clearing condition]

- Writing 0 to the bit after it was read as 1

CKPOL Bit (Clock Polarity Select)

This bit selects the polarity of the clock signal output through the SCKn pin. Refer to Figure 28.58 for details.
Set the bit to 0 in other than simple SPI mode and clock synchronous mode.

CKPH Bit (Clock Phase Select)

This bit selects the phase of the clock signal output through the SCKn pin. Refer to Figure 28.58 for details.
Set the bit to 0 in other than simple SPI mode and clock synchronous mode.

28.2.20 Extended Serial Module Enable Register (ESMER)

Address(es): SCI12.ESMER 0008 B320h

	b7	b6	b5	b4	b3	b2	b1	b0
	—	—	—	—	—	—	—	ESME
Value after reset:	0	0	0	0	0	0	0	0

Bit	Symbol	Bit Name	Description	R/W
b0	ESME	Extended Serial Mode Enable	0: The extended serial mode is disabled. 1: The extended serial mode is enabled.	R/W
b7 to b1	—	Reserved	These bits are read as 0. The write value should be 0.	R/W

ESME Bit (Extended Serial Mode Enable)

When the ESME bit is 1, the facilities of the extended serial mode control section are enabled.
When the ESME bit is 0, the extended serial mode control section is initialized.

Table 28.26 Settings of the ESME Bit and Timer Operation Mode

ESME Bit	Timer Mode	Break Field Low Width Determination Mode	Break Field Low Width Output Mode
0	Available*1	Not available	Not available
1	Available	Available	Available

Note 1. Operation is only possible with PCLK selected.

28.2.21 Control Register 0 (CR0)

Address(es): SCI12.CR0 0008 B321h

	b7	b6	b5	b4	b3	b2	b1	b0
	—	—	—	—	BRME	RXDSF	SFSF	—
Value after reset:	0	0	0	0	0	0	0	0

Bit	Symbol	Bit Name	Description	R/W
b0	—	Reserved	This bit is read as 0. The write value should be 0.	R/W
b1	SFSF	Start Frame Status Flag	0: Start Frame detection function is disabled. 1: Start Frame detection function is enabled.	R
b2	RXDSF	RXDX12 Input Status Flag	0: RXDX12 input is enabled. 1: RXDX12 input is disabled.	R
b3	BRME	Bit Rate Measurement Enable	0: Measurement of bit rate is disabled. 1: Measurement of bit rate is enabled.	R/W
b7 to b4	—	Reserved	These bits are read as 0. The write value should be 0.	R/W

28.2.22 Control Register 1 (CR1)

Address(es): SCI12.CR1 0008 B322h

	b7	b6	b5	b4	b3	b2	b1	b0
	PIBS[2:0]			PIBE	CF1DS[1:0]		CF0RE	BFE
Value after reset:	0	0	0	0	0	0	0	0

Bit	Symbol	Bit Name	Description	R/W
b0	BFE	Break Field Enable	0: Break Field detection is disabled. 1: Break Field detection is enabled.	R/W
b1	CF0RE	Control Field 0 Reception Enable	0: Reception of Control Field 0 is disabled. 1: Reception of Control Field 0 is enabled.	R/W
b3, b2	CF1DS[1:0]	Control Field 1 Data Register Select	b3 b2 0 0: Selects comparison with the value in the PCF1DR register. 0 1: Selects comparison with the value in the SCF1DR register. 1 0: Selects comparison with the values in the PCF1DR and SCF1DR registers. 1 1: Setting prohibited.	R/W
b4	PIBE	Priority Interrupt Bit Enable	0: The priority interrupt bit is disabled. 1: The priority interrupt bit is enabled.	R/W
b7 to b5	PIBS[2:0]	Priority Interrupt Bit Select	b7 b5 0 0 0: 0th bit of Control Field 1 0 0 1: 1st bit of Control Field 1 0 1 0: 2nd bit of Control Field 1 0 1 1: 3rd bit of Control Field 1 1 0 0: 4th bit of Control Field 1 1 0 1: 5th bit of Control Field 1 1 1 0: 6th bit of Control Field 1 1 1 1: 7th bit of Control Field 1	R/W

28.2.23 Control Register 2 (CR2)

Address(es): SCI12.CR2 0008 B323h

	b7	b6	b5	b4	b3	b2	b1	b0
	RTS[1:0]		BCCS[1:0]		—	DFCS[2:0]		
Value after reset:	0	0	0	0	0	0	0	0

Bit	Symbol	Bit Name	Description	R/W
b2 to b0	DFCS[2:0]	RXDX12 Signal Digital Filter Clock Select	b2 b0 0 0 0: Filter is disabled. 0 0 1: Filter clock is base clock*1, *2 0 1 0: Filter clock is PCLK/8 0 1 1: Filter clock is PCLK/16 1 0 0: Filter clock is PCLK/32 1 0 1: Filter clock is PCLK/64 1 1 0: Filter clock is PCLK/128 1 1 1: Setting prohibited	R/W
b3	—	Reserved	This bit is read as 0. The write value should be 0.	R/W
b5, b4	BCCS[1:0]	Bus Collision Detection Clock Select	• When SEMR.BGDM = 0 or SEMR.BGDM = 1 and SMR.CKS[1:0] = a value other than 00b b5 b4 0 0: Base clock 0 1: Base clock frequency divided by 2 1 0: Base clock frequency divided by 4 1 1: Setting prohibited • When SEMR.BGDM = 1 and SMR.CKS[1:0] = 00b b5 b4 0 0: Base clock frequency divided by 2 0 1: Base clock frequency divided by 4 1 0: Setting prohibited 1 1: Setting prohibited	R/W
b7, b6	RTS[1:0]	RXDX12 Reception Sampling Timing Select	• When SCI12.SEMR.ABCS = 0 b7 b6 0 0: Rising edge of the 8th cycle of base clock 0 1: Rising edge of the 10th cycle of base clock 1 0: Rising edge of the 12th cycle of base clock 1 1: Rising edge of the 14th cycle of base clock • When SCI12.SEMR.ABCS = 1 b7 b6 0 0: Rising edge of the 4th cycle of base clock 0 1: Rising edge of the 5th cycle of base clock 1 0: Rising edge of the 6th cycle of base clock 1 1: Rising edge of the 7th cycle of base clock	R/W

Note: The period of the base clock is 1/16 of a single bit period when the SCI12.SEMR.ABCS is 0, and 1/8 of a single bit period when the SCI12.SEMR.ABCS is 1.
Note 1. To use the base clock, set the SCI12.SCR.TE bit to 1.
Note 2. The base clock divided by 2 is the filter clock when the SEMR.BGDM bit is 1 and the SMR.CKS[1:0] bits are 00b.

28.2.24 Control Register 3 (CR3)

Address(es): SCI12.CR3 0008 B324h

	b7	b6	b5	b4	b3	b2	b1	b0
	—	—	—	—	—	—	—	SDST
Value after reset:	0	0	0	0	0	0	0	0

Bit	Symbol	Bit Name	Description	R/W
b0	SDST	Start Frame Detection Start	0: Detection of Start Frame is not performed. 1: Detection of Start Frame is performed.	R/W
b7 to b1	—	Reserved	These bits are read as 0. The write value should be 0.	R/W

SDST Bit (Start Frame Detection Start)

Detection of a Start Frame begins when this bit is set to 1. The bit is read as 0.

28.2.25 Port Control Register (PCR)

Address(es): SCI12.PCR 0008 B325h

	b7	b6	b5	b4	b3	b2	b1	b0
	—	—	—	SHARPS	—	—	RXDXPS	TXDXPS
Value after reset:	0	0	0	0	0	0	0	0

Bit	Symbol	Bit Name	Description	R/W
b0	TXDXPS	TXDX12 Signal Polarity Select	0: The polarity of TXDX12 signal is not inverted for output. 1: The polarity of TXDX12 signal is inverted for output.	R/W
b1	RXDXPS	RXDX12 Signal Polarity Select	0: The polarity of RXDX12 signal is not inverted for input. 1: The polarity of RXDX12 signal is inverted for input.	R/W
b3, b2	—	Reserved	These bits are read as 0. The write value should be 0.	R/W
b4	SHARPS	TXDX12/RXDX12 Pin Multiplexing Select	0: The TXDX12 and RXDX12 pins are independent. 1: The TXDX12 and RXDX12 signals are multiplexed on the same pin.	R/W
b7 to b5	—	Reserved	These bits are read as 0. The write value should be 0.	R/W

SHARPS Bit (TXDX12/RXDX12 Pin Multiplexing Select)

When this bit is set to 1, the TXDX12 and RXDX12 signals are multiplexed on the same pin so that half-duplex communications become possible.

28.2.26 Interrupt Control Register (ICR)

Address(es): SCI12.ICR 0008 B326h

	b7	b6	b5	b4	b3	b2	b1	b0
	—	—	AEDIE	BCDIE	PIBDIE	CF1MIE	CF0MIE	BFDIE
Value after reset:	0	0	0	0	0	0	0	0

Bit	Symbol	Bit Name	Description	R/W
b0	BFDIE	Break Field Low Width Detected Interrupt Enable	0: Interrupts on detection of the low width for a Break Field are disabled. 1: Interrupts on detection of the low width for a Break Field are enabled.	R/W
b1	CF0MIE	Control Field 0 Match Detected Interrupt Enable	0: Interrupts on detection of a match with Control Field 0 are disabled. 1: Interrupts on detection of a match with Control Field 0 are enabled.	R/W
b2	CF1MIE	Control Field 1 Match Detected Interrupt Enable	0: Interrupts on detection of a match with Control Field 1 are disabled. 1: Interrupts on detection of a match with Control Field 1 are enabled.	R/W
b3	PIBDIE	Priority Interrupt Bit Detected Interrupt Enable	0: Interrupts on detection of the priority interrupt bit are disabled. 1: Interrupts on detection of the priority interrupt bit are enabled.	R/W
b4	BCDIE	Bus Collision Detected Interrupt Enable	0: Interrupts on detection of a bus collision are disabled. 1: Interrupts on detection of a bus collision are enabled.	R/W
b5	AEDIE	Valid Edge Detected Interrupt Enable	0: Interrupts on detection of a valid edge are disabled. 1: Interrupts on detection of a valid edge are enabled.	R/W
b7, b6	—	Reserved	These bits are read as 0. The write value should be 0.	R/W

28.2.27 Status Register (STR)

Address(es): SCI12.STR 0008 B327h

	b7	b6	b5	b4	b3	b2	b1	b0
	—	—	AEDF	BCDF	PIBDF	CF1MF	CF0MF	BFDF
Value after reset:	0	0	0	0	0	0	0	0

Bit	Symbol	Bit Name	Description	R/W
b0	BFDF	Break Field Low Width Detection Flag	[Setting conditions] • Detection of the low width for a Break Field • Completion of the output of the low width for a Break Field • Underflow of the timer [Clearing condition] • Writing 1 to the STCR.BFDCL bit	R
b1	CF0MF	Control Field 0 Match Flag	[Setting condition] • A match between the value received in Control Field 0 and the set value. [Clearing condition] • Writing 1 to the STCR.CF0MCL bit	R
b2	CF1MF	Control Field 1 Match Flag	[Setting condition] • A match between the data received in Control Field 1 and the set values. [Clearing condition] • Writing 1 to the STCR.CF1MCL bit	R
b3	PIBDF	Priority Interrupt Bit Detection Flag	[Setting condition] • Detection of the priority interrupt bit [Clearing condition] • Writing 1 to the STCR.PIBDCL bit	R
b4	BCDF	Bus Collision Detected Flag	[Setting condition] • Detection of the bus collision [Clearing condition] • Writing 1 to the STCR.BCDCL bit	R
b5	AEDF	Valid Edge Detection Flag	[Setting condition] • Detection of a valid edge [Clearing condition] • Writing 1 to the STCR.AEDCL bit	R
b7, b6	—	Reserved	These bits are read as 0. The write value should be 0.	R

28.2.28 Status Clear Register (STCR)

Address(es): SCI12.STCR 0008 B328h

	b7	b6	b5	b4	b3	b2	b1	b0
	—	—	AEDCL	BCDCL	PIBDCL	CF1MCL	CF0MCL	BFDCL
Value after reset:	0	0	0	0	0	0	0	0

Bit	Symbol	Bit Name	Description	R/W
b0	BFDCL	BFDF Clear	Setting this bit to 1 clears the STR.BFDF flag. This bit is read as 0.	R/W
b1	CF0MCL	CF0MF Clear	Setting this bit to 1 clears the STR.CF0MF flag. This bit is read as 0.	R/W
b2	CF1MCL	CF1MF Clear	Setting this bit to 1 clears the STR.CF1MF flag. This bit is read as 0.	R/W
b3	PIBDCL	PIBDF Clear	Setting this bit to 1 clears the STR.PIBDF flag. This bit is read as 0.	R/W
b4	BCDCL	BCDF Clear	Setting this bit to 1 clears the STR.BCDF flag. This bit is read as 0.	R/W
b5	AEDCL	AEDF Clear	Setting this bit to 1 clears the STR.AEDF flag. This bit is read as 0.	R/W
b7, b6	—	Reserved	These bits are read as 0. The write value should be 0.	R/W

28.2.29 Control Field 0 Data Register (CF0DR)

Address(es): SCI12.CF0DR 0008 B329h

	b7	b6	b5	b4	b3	b2	b1	b0
Value after reset:	0	0	0	0	0	0	0	0

The CF0DR register is an 8-bit readable and writable register that holds a value for comparison with Control Field 0.

28.2.30 Control Field 0 Compare Enable Register (CF0CR)

Address(es): SCI12.CF0CR 0008 B32Ah

	b7	b6	b5	b4	b3	b2	b1	b0
	CF0CE7	CF0CE6	CF0CE5	CF0CE4	CF0CE3	CF0CE2	CF0CE1	CF0CE0
Value after reset:	0	0	0	0	0	0	0	0

Bit	Symbol	Bit Name	Description	R/W
b0	CF0CE0	Control Field 0 Bit 0 Compare Enable	0: Comparison with bit 0 of Control Field 0 is disabled. 1: Comparison with bit 0 of Control Field 0 is enabled.	R/W
b1	CF0CE1	Control Field 0 Bit 1 Compare Enable	0: Comparison with bit 1 of Control Field 0 is disabled. 1: Comparison with bit 1 of Control Field 0 is enabled.	R/W
b2	CF0CE2	Control Field 0 Bit 2 Compare Enable	0: Comparison with bit 2 of Control Field 0 is disabled. 1: Comparison with bit 2 of Control Field 0 is enabled.	R/W
b3	CF0CE3	Control Field 0 Bit 3 Compare Enable	0: Comparison with bit 3 of Control Field 0 is disabled. 1: Comparison with bit 3 of Control Field 0 is enabled.	R/W
b4	CF0CE4	Control Field 0 Bit 4 Compare Enable	0: Comparison with bit 4 of Control Field 0 is disabled. 1: Comparison with bit 4 of Control Field 0 is enabled.	R/W
b5	CF0CE5	Control Field 0 Bit 5 Compare Enable	0: Comparison with bit 5 of Control Field 0 is disabled. 1: Comparison with bit 5 of Control Field 0 is enabled.	R/W
b6	CF0CE6	Control Field 0 Bit 6 Compare Enable	0: Comparison with bit 6 of Control Field 0 is disabled. 1: Comparison with bit 6 of Control Field 0 is enabled.	R/W
b7	CF0CE7	Control Field 0 Bit 7 Compare Enable	0: Comparison with bit 7 of Control Field 0 is disabled. 1: Comparison with bit 7 of Control Field 0 is enabled.	R/W

28.2.31 Control Field 0 Receive Data Register (CF0RR)

Address(es): SCI12.CF0RR 0008 B32Bh

	b7	b6	b5	b4	b3	b2	b1	b0
Value after reset:	0	0	0	0	0	0	0	0

CF0RR is a readable register that holds the value received in Control Field 0.

28.2.32 Primary Control Field 1 Data Register (PCF1DR)

Address(es): SCI12.PCF1DR 0008 B32Ch

	b7	b6	b5	b4	b3	b2	b1	b0
Value after reset:	0	0	0	0	0	0	0	0

PCF1DR is an 8-bit readable and writable register that holds the 8-bit primary value for comparison with Control Field 1.

28.2.33 Secondary Control Field 1 Data Register (SCF1DR)

Address(es): SCI12.SCF1DR 0008 B32Dh

	b7	b6	b5	b4	b3	b2	b1	b0
Value after reset:	0	0	0	0	0	0	0	0

PCF1DR is an 8-bit readable and writable register that holds the 8-bit secondary value for comparison with Control Field 1.

28.2.34 Control Field 1 Compare Enable Register (CF1CR)

Address(es): SCI12.CF1CR 0008 B32Eh

	b7	b6	b5	b4	b3	b2	b1	b0
	CF1CE 7	CF1CE 6	CF1CE 5	CF1CE 4	CF1CE 3	CF1CE 2	CF1CE 1	CF1CE 0
Value after reset:	0	0	0	0	0	0	0	0

Bit	Symbol	Bit Name	Description	R/W
b0	CF1CE0	Control Field 1 Bit 0 Compare Enable	0: Comparison with bit 0 of Control Field 1 is disabled. 1: Comparison with bit 0 of Control Field 1 is enabled.	R/W
b1	CF1CE1	Control Field 1 Bit 1 Compare Enable	0: Comparison with bit 1 of Control Field 1 is disabled. 1: Comparison with bit 1 of Control Field 1 is enabled.	R/W
b2	CF1CE2	Control Field 1 Bit 2 Compare Enable	0: Comparison with bit 2 of Control Field 1 is disabled. 1: Comparison with bit 2 of Control Field 1 is enabled.	R/W
b3	CF1CE3	Control Field 1 Bit 3 Compare Enable	0: Comparison with bit 3 of Control Field 1 is disabled. 1: Comparison with bit 3 of Control Field 1 is enabled.	R/W
b4	CF1CE4	Control Field 1 Bit 4 Compare Enable	0: Comparison with bit 4 of Control Field 1 is disabled. 1: Comparison with bit 4 of Control Field 1 is enabled.	R/W
b5	CF1CE5	Control Field 1 Bit 5 Compare Enable	0: Comparison with bit 5 of Control Field 1 is disabled. 1: Comparison with bit 5 of Control Field 1 is enabled.	R/W
b6	CF1CE6	Control Field 1 Bit 6 Compare Enable	0: Comparison with bit 6 of Control Field 1 is disabled. 1: Comparison with bit 6 of Control Field 1 is enabled.	R/W
b7	CF1CE7	Control Field 1 Bit 7 Compare Enable	0: Comparison with bit 7 of Control Field 1 is disabled. 1: Comparison with bit 7 of Control Field 1 is enabled.	R/W

28.2.35 Control Field 1 Receive Data Register (CF1RR)

Address(es): SCI12.CF1RR 0008 B32Fh

	b7	b6	b5	b4	b3	b2	b1	b0
Value after reset:	0	0	0	0	0	0	0	0

CF1RR is a readable register that holds the value received in Control Field 1.

28.2.36 Timer Control Register (TCR)

Address(es): SCI12.TCR 0008 B330h

	b7	b6	b5	b4	b3	b2	b1	b0
	—	—	—	—	—	—	—	TCST
Value after reset:	0	0	0	0	0	0	0	0

Bit	Symbol	Bit Name	Description	R/W
b0	TCST	Timer Count Start	0: Stops the timer counting 1: Starts the timer counting	R/W
b7 to b1	—	Reserved	These bits are read as 0. The write value should be 0.	R/W

28.2.37 Timer Mode Register (TMR)

Address(es): SCI12.TMR 0008 B331h

	b7	b6	b5	b4	b3	b2	b1	b0
	—	TCSS[2:0]			TWRC	—	TOMS[1:0]	
Value after reset:	0	0	0	0	0	0	0	0

Bit	Symbol	Bit Name	Description	R/W
b1, b0	TOMS[1:0]	Timer Operating Mode Select*1	b1 b0 0 0: Timer mode 0 1: Break Field low width determination mode 1 0: Break Field low width output mode 1 1: Setting prohibited	R/W
b2	—	Reserved	This bit is read as 0. The write value should be 0.	R/W
b3	TWRC	Counter Write Control	0: Data is written to the reload register and counter 1: Data is written to the reload register only	R/W
b6 to b4	TCSS[2:0]	Timer Count Clock Source Select*1	b6 b4 0 0 0: PCLK 0 0 1: PCLK/2 0 1 0: PCLK/4 0 1 1: PCLK/8 1 0 0: PCLK/16 1 0 1: PCLK/32 1 1 0: PCLK/64 1 1 1: PCLK/128	R/W
b7	—	Reserved	This bit is read as 0. The write value should be 0.	R/W

Note 1. Rewrite the TOMS[1:0] and TCSS[2:0] bits only when the timer is stopped (TCST = 0).

TWRC Bit (Counter Write Control)

This bit determines whether a value written to the TPRE or TCNT register is written to the reload register only or is written to both the reload register and the counter.

28.2.38 Timer Prescaler Register (TPRE)

Address(es): SCI12.TPRE 0008 B332h

	b7	b6	b5	b4	b3	b2	b1	b0
Value after reset:	1	1	1	1	1	1	1	1

TPRE consists of an 8-bit reload register, a read buffer, and a counter, each of which has FFh as its initial value. The counter counts down in synchronization with the counter clock selected by the TMR.TCSS[2:0] bits, and is reloaded with the value in the reload register when it underflows. Underflows of this register provide the clock source to drive counting by the TCNT register. The reload register and read buffer are allocated to the same address. Data is written to the reload register in writing, and the counter value that has been transferred to the read buffer is returned in reading.
It takes one PCLK cycle to load a value from the reload register to the counter.

28.2.39 Timer Count Register (TCNT)

Address(es): SCI12.TCNT 0008 B333h

	b7	b6	b5	b4	b3	b2	b1	b0
Value after reset:	1	1	1	1	1	1	1	1

TCNT consists of an 8-bit reload register, a read buffer, and a counter, each of which has FFh as its initial value. This down-counter counts underflows of the TPRE register until the TCNT register underflows, and is then reloaded with the value from the reload register. The reload register and read buffer are allocated to the same address. Data is written to the reload register in writing, and the counter value that has been transferred to the read buffer is returned in reading.
It takes one PCLK cycle to load a value from the reload register to the counter.

28.3 Operation in Asynchronous Mode

Figure 28.5 shows the general format for asynchronous serial communications.
One frame consists of a start bit (low level), transmit/receive data, a parity bit, and stop bits (high level).
In asynchronous serial communications, the communications line is usually held in the mark state (high level).
The SCI monitors the communications line. When the SCI detects a low, it regards that as a start bit and starts serial communication.
Inside the SCI, the transmitter and receiver are independent units, enabling full-duplex communications. Both the transmitter and the receiver also have a double-buffered structure, so that data can be read or written during transmission or reception, enabling continuous data transmission and reception.

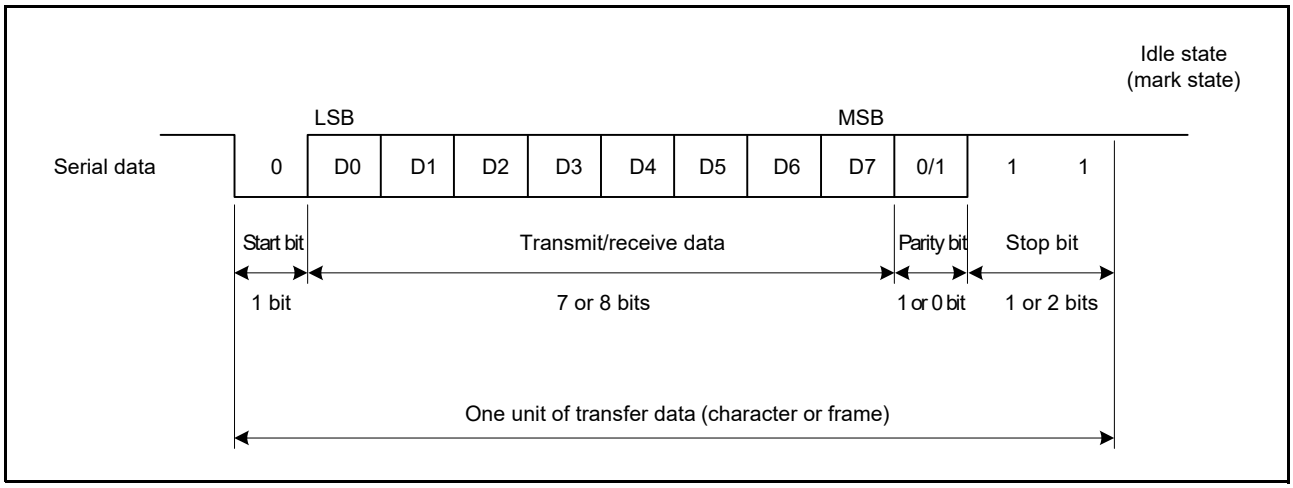

Figure 28.5 Data Format in Asynchronous Serial Communications (Example with 8-Bit Data, Parity, 2 Stop Bits)

28.3.1 Serial Data Transfer Format

Table 28.27 lists the serial data transfer formats that can be used in asynchronous mode.
Any of 18 transfer formats can be selected according to the SMR and SCMR setting. For details of multi-processor function, refer to section 28.4, Multi-Processor Communications Function.

Table 28.27 Serial Transfer Formats (Asynchronous Mode)

SCMR Setting	SMR Setting				Serial Transfer Format and Frame Length												
CHR1	CHR	PE	MP	STOP	1	2	3	4	5	6	7	8	9	10	11	12	13
0	0	0	0	0	S	9-bit data									STOP		
0	0	0	0	1	S	9-bit data									STOP	STOP	
0	0	1	0	0	S	9-bit data									P	STOP	
0	0	1	0	1	S	9-bit data									P	STOP	STOP
1	0	0	0	0	S	8-bit data								STOP			
1	0	0	0	1	S	8-bit data								STOP	STOP		
1	0	1	0	0	S	8-bit data								P	STOP		
1	0	1	0	1	S	8-bit data								P	STOP	STOP	
1	1	0	0	0	S	7-bit data							STOP				
1	1	0	0	1	S	7-bit data							STOP	STOP			
1	1	1	0	0	S	7-bit data							P	STOP			
1	1	1	0	1	S	7-bit data							P	STOP	STOP		
0	0	—	1	0	S	9-bit data									MPB	STOP	
0	0	—	1	1	S	9-bit data									MPB	STOP	STOP
1	0	—	1	0	S	8-bit data								MPB	STOP		
1	0	—	1	1	S	8-bit data								MPB	STOP	STOP	
1	1	—	1	0	S	7-bit data							MPB	STOP			
1	1	—	1	1	S	7-bit data							MPB	STOP	STOP		

S: Start bit
STOP: Stop bit
P: Parity bit
MPB: Multi-processor bit

28.3.2 Receive Data Sampling Timing and Reception Margin in Asynchronous Mode

In asynchronous mode, the SCI operates on a base clock with a frequency of 16 times*1 the bit rate.
In reception, the SCI samples the falling edge of the start bit using the base clock, and performs internal synchronization. Since receive data is sampled at the rising edge of the 8th pulse*1 of the base clock, data is latched at the middle of each bit, as shown in Figure 28.6. Thus the reception margin in asynchronous mode is determined by formula (1) below.

$$M = \left|\left(0.5 - \frac{1}{2N}\right) - (L - 0.5)F - \frac{|D - 0.5|}{N}(1 + F)\right| \times 100\ (\%) \quad \cdots \text{Formula (1)}$$

M: Reception margin
N: Ratio of bit rate to clock
(N = 16 when SEMR.ABCS = 0, N = 8 when SEMR.ABCS = 1)
D: Duty cycle of clock (D = 0.5 to 1.0)
L: Frame length (L = 9 to 13)
F: Absolute value of clock frequency deviation

Assuming values of F = 0 and D = 0.5 in formula (1), the reception margin is determined by the formula below.

M = {0.5 – 1/(2 × 16)} × 100 (%) = 46.875 (%)

However, this is only the computed value, and a margin of 20% to 30% should be allowed in system design.

Note 1. These are values when the SEMR.ABCS bit is 0. When the ABCS bit is 1, a frequency of 8 times the bit rate is used as a base clock and receive data is sampled at the rising edge of the 4th pulse of the base clock.

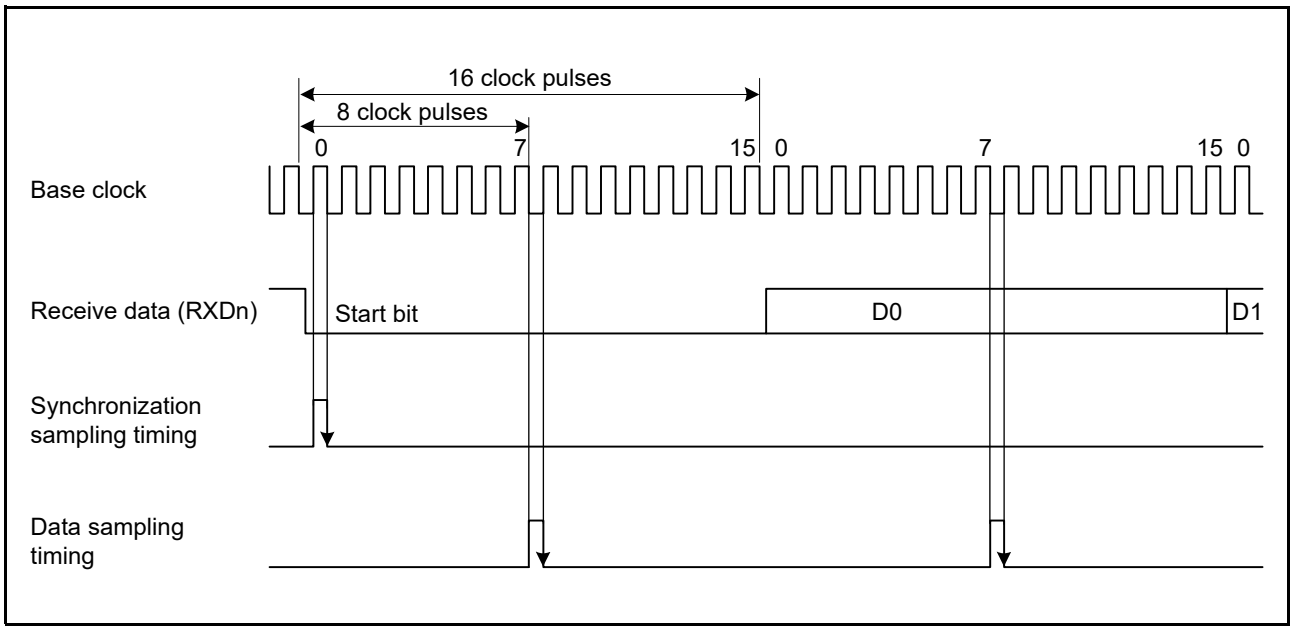

Figure 28.6 Receive Data Sampling Timing in Asynchronous Mode

28.3.3 Clock

Either an internal clock generated by the on-chip baud rate generator or an external clock input to the SCKn pin can be selected as the SCI's transfer clock, according to the setting of the SMR.CM bit and the SCR.CKE[1:0] bits.
When an external clock is input to the SCKn pin, the clock frequency should be 16 times the bit rate (when SEMR.ABCS bit = 0) and 8 times the bit rate (when SEMR.ABCS bit = 1). In addition, when an external clock is specified, the base clock of TMR0 and TMR1 can be selected by the SCIn.SEMR.ACS0 bit (n = 5, 6, 12).
When the SCI is operated on an internal clock, the clock can be output from the SCKn pin. The frequency of the clock output in this case is equal to the bit rate, and the phase is such that the rising edge of the clock is in the middle of the transmit data, as shown in Figure 28.7.

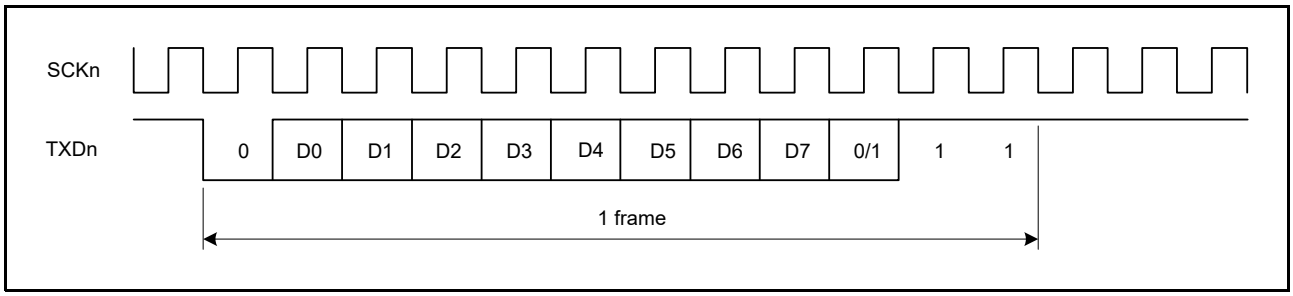

Figure 28.7 Phase Relationship between Output Clock and Transmit Data (Asynchronous Mode: SMR.CHR = 0, PE = 1, MP = 0, STOP = 1)

28.3.4 Double-Speed Mode

The output clock frequency of the on-chip baud rate generator is doubled by setting the SEMR.BGDM bit to 1, enabling high-speed communication at a doubled bit rate. If the SEMR.ABCS bit is set to 1 under the above condition, the number of base clock cycles changes from 16 to 8, so the bit rate becomes four times faster than the initial state.
As shown by Formula (1) in section 28.3.2, Receive Data Sampling Timing and Reception Margin in Asynchronous Mode, setting the SEMR.ABCS bit to 1 changes the number of cycles to 8, and the sampling interval becomes longer. This causes the reception margin to decrease. Therefore, setting the SEMR.BGDM bit to 1 and the SEMR.ABCS bit to 0 is recommended instead of setting the SEMR.BGDM bit to 0 and the SEMR.ABCS bit to 1 for high-speed operation at a doubled bit rate.

28.3.5 CTS and RTS Functions

The CTS function is the use of input on the CTSn# pin in transmission control. Setting the SPMR.CTSE bit to 1 enables the CTS function. When the CTS function is enabled, placing the low level on the CTSn# pin causes transmission to start.
Applying the high level to the CTS# pin while transmission is in progress does not affect transmission of the current frame, which continues.
In the RTS function, by using the function of output on the RTSn# pin, a low level is output when reception becomes possible. Conditions for output of the low and high level are shown below.

[Conditions for low-level output]
When the following conditions are all satisfied.

- The SCR.RE bit is 1.
- Reception is not in progress.
- There are no received data yet to be read.
- The ORER, FER, and PER flags in the SSR register are all 0.

[Condition for high-level output]
When the conditions for low-level output are not satisfied.

Note that either one of CTS and RTS can be selected.

28.3.6 SCI Initialization (Asynchronous Mode)

Before transmitting and receiving data, start by writing the initial value 00h to the SCR register and then continue through the procedure for SCI given in Figure 28.8. Whenever the operating mode or transfer format is changed, the SCR register must be initialized before the change is made.

When the external clock is used in asynchronous mode, ensure that the clock signal is supplied even during initialization.

Note that setting the SCR.RE bit to 0 initializes neither the ORER, FER, PER, and RDRF flags in the SSR register nor registers RDR, RDRH, and RDRL.

In addition, note that setting bits TIE, TE, and TEIE in the SCR register to 1 simultaneously leads to the generation of a transmit end interrupt (TEI) request before the generation of a transmit data empty interrupt (TXI) request.

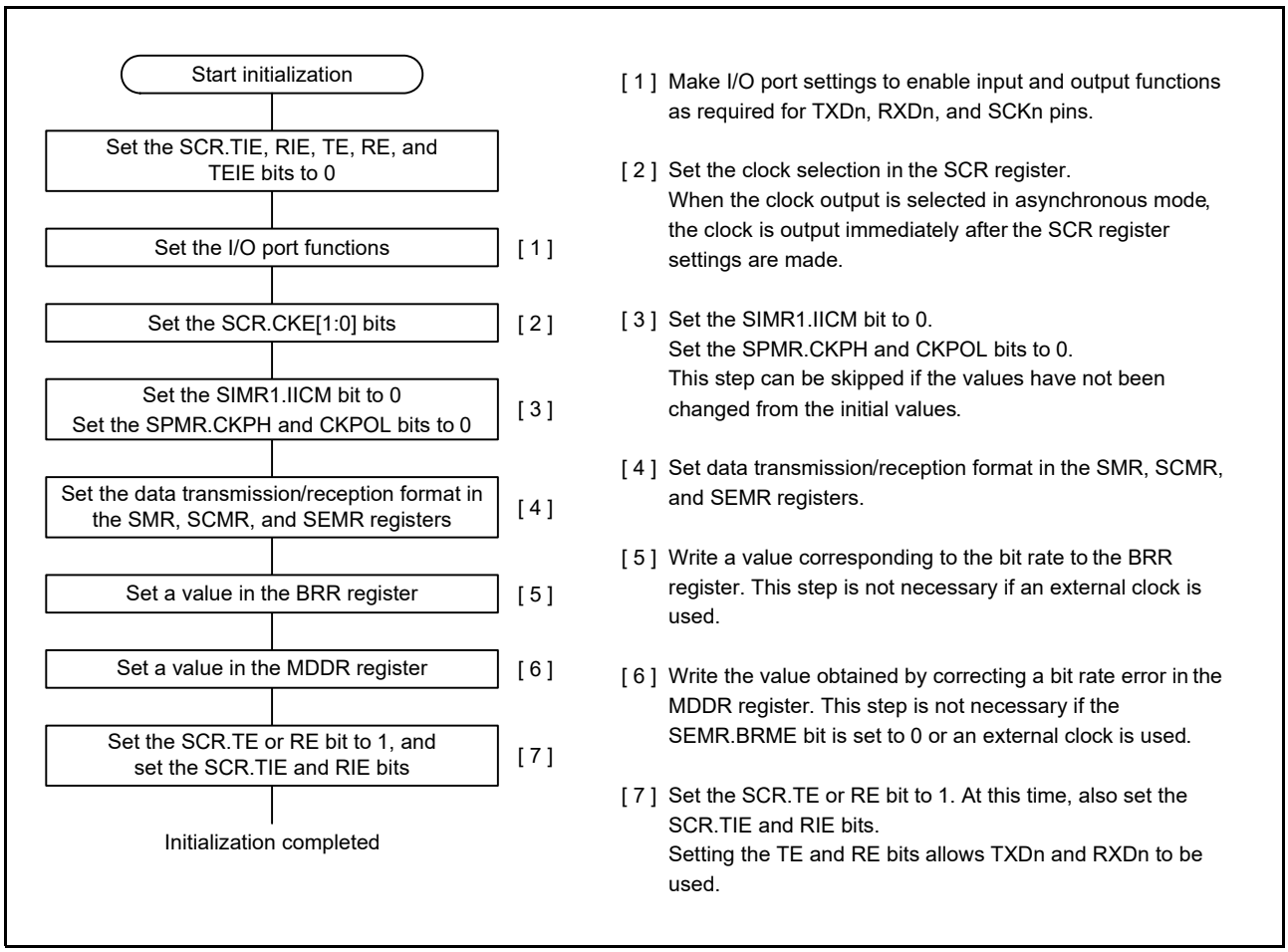

Figure 28.8 Sample SCI Initialization Flowchart (Asynchronous Mode)

Figure 28.9 shows an example of data transmission when the SCI is set to asynchronous mode according to the flow described in Figure 28.8 after a reset. When the pin function is set to the TXD pin, it is still high-impedance because the SCR.TE bit is 0. When the transmit data is written after setting the TE bit to 1, a data transmission starts. After the TE bit is set to 1, one frame of high is output from TXD pin (internal wait time) and then the data transmission starts.

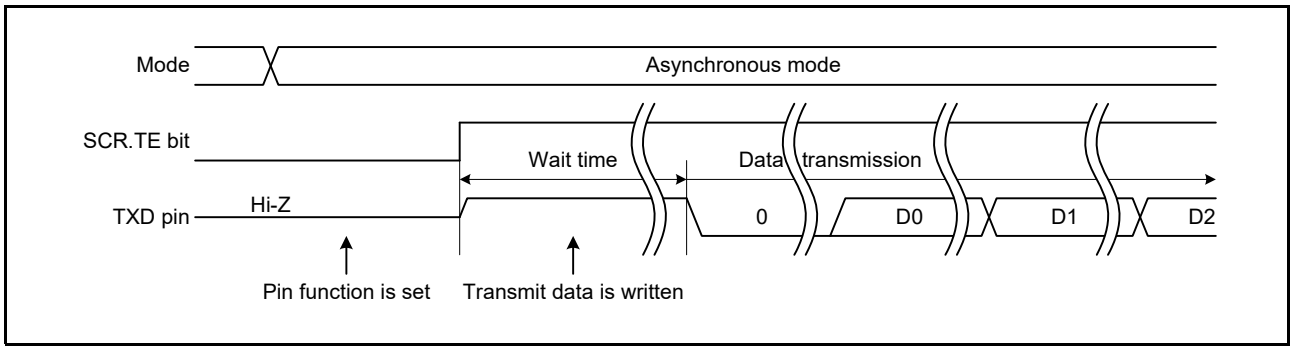

Figure 28.9 Example of Data Transmission Timing in Asynchronous Mode

28.3.7 Serial Data Transmission (Asynchronous Mode)

Figure 28.10 to Figure 28.12 show an example of the operation for serial transmission in asynchronous mode.
In serial transmission, the SCI operates as described below.

1. The SCI transfers data from the TDR register*1 to the TSR register when data is written to the TDR register*1 in the TXI interrupt handling routine. The TXI interrupt request at the beginning of transmission is generated when the SCR.TE bit is set to 1 after the SCR.TIE bit is set to 1 or when these 2 bits are set to 1 simultaneously by a single instruction.
2. Transmission starts after the SPMR.CTSE bit is set to 0 (CTS function is disabled) and a low level on the CTSn# pin causes data transfer from the TDR register*1 to the TSR register. If the SCR.TIE bit is 1 at this time, a TXI interrupt request is generated. Continuous transmission is obtainable by writing the next transmit data to the TDR register*1 in the TXI interrupt handling routine before transmission of the current transmit data is completed. When TEI interrupt requests are in use, set the SCR.TIE bit to 0 (a TXI interrupt request is disabled) and the SCR.TEIE bit to 1 (a TEI interrupt request is enabled) after the last of the data to be transmitted are written to the TDR register*1, *2 from the handling routine for TXI requests.
3. Data is sent from the TXDn pin in the following order: start bit, transmit data, parity bit or multi-processor bit (may be omitted depending on the format), and stop bit.
4. The SCI checks for updating of (writing to) the TDR register*3 at the time of stop bit output.
5. When the TDR register*3 is updated, setting of the SPMR.CTSE bit to 0 (CTS function is disabled) or a low level input on the CTSn# pin cause the next transfer of the next transmit data from the TDR register*1 to the TSR register and sending of the stop bit, after which serial transmission of the next frame starts.
6. If the TDR register*3 is not updated, the SCI sets the SSR.TEND flag to 1, sends the stop bit, and then outputs high to put the line in the mark state. If the SCR.TEIE bit is 1 at this time, the SSR.TEND flag is set to 1 and a TEI interrupt request is generated.

Note 1. Write data not to the TDR register but to the TDRH and TDRL registers when 9-bit data length is selected.
Note 2. Write data in the order from the TDRH register to the TDRL register when 9-bit data length is selected.
Note 3. The SCI checks for updating of the TDRL register only and does not check for updating of the TDRH register when 9-bit data length is selected.

Figure 28.13 shows a sample flowchart for serial transmission in asynchronous mode.

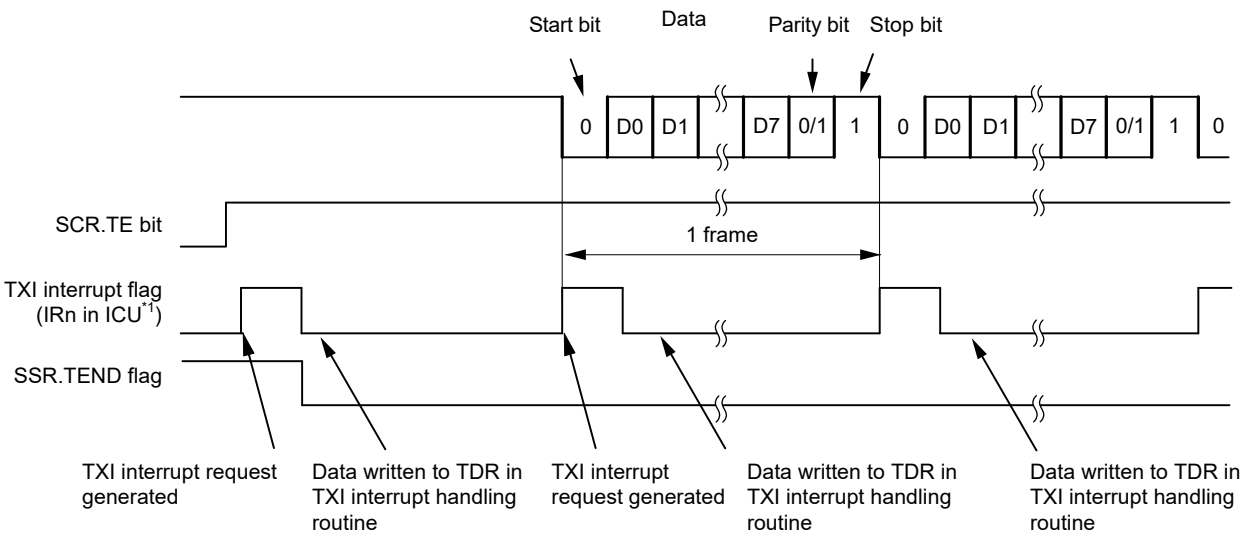

Note 1. Refer to section 14, Interrupt Controller (ICUb) for details on the corresponding interrupt vector number.

Figure 28.10 Example of Operation for Serial Transmission in Asynchronous Mode (1) (with 8-Bit Data, Parity, 1 Stop Bit, CTS Function Not Used, at the Beginning of Transmission)

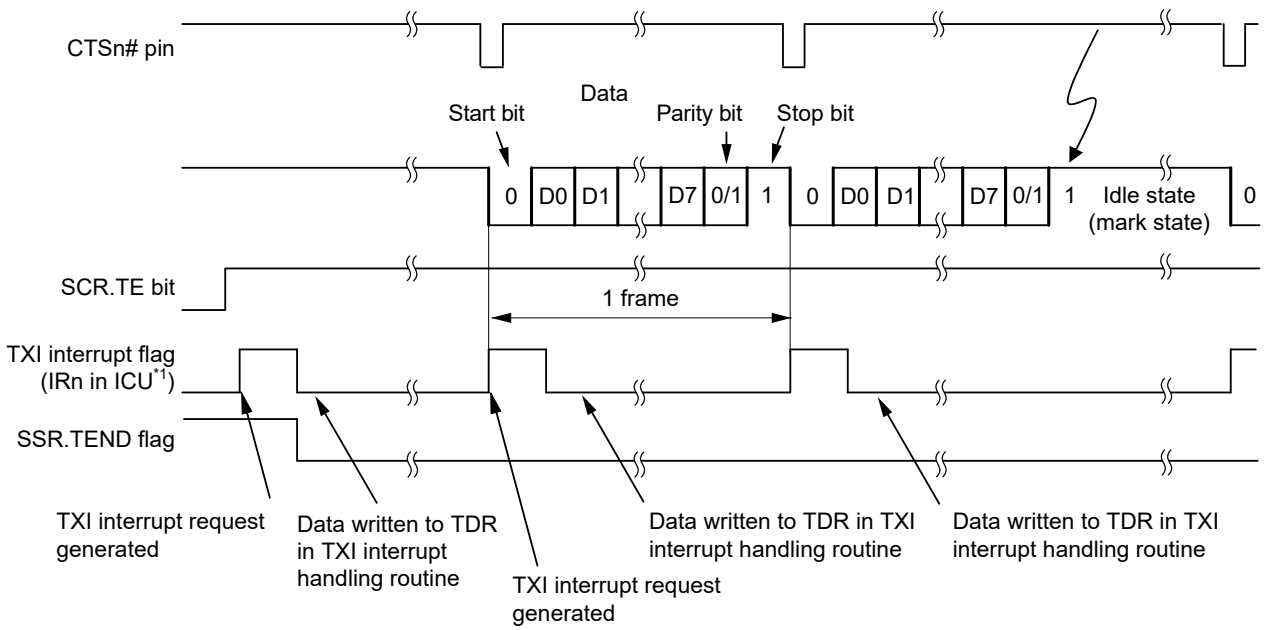

Note 1. Refer to section 14, Interrupt Controller (ICUb) for details on the corresponding interrupt vector number.

Figure 28.11 Example of Operation for Serial Transmission in Asynchronous Mode (2) (with 8-Bit Data, Parity, 1 Stop Bit, CTS Function Used, at the Beginning of Transmission)

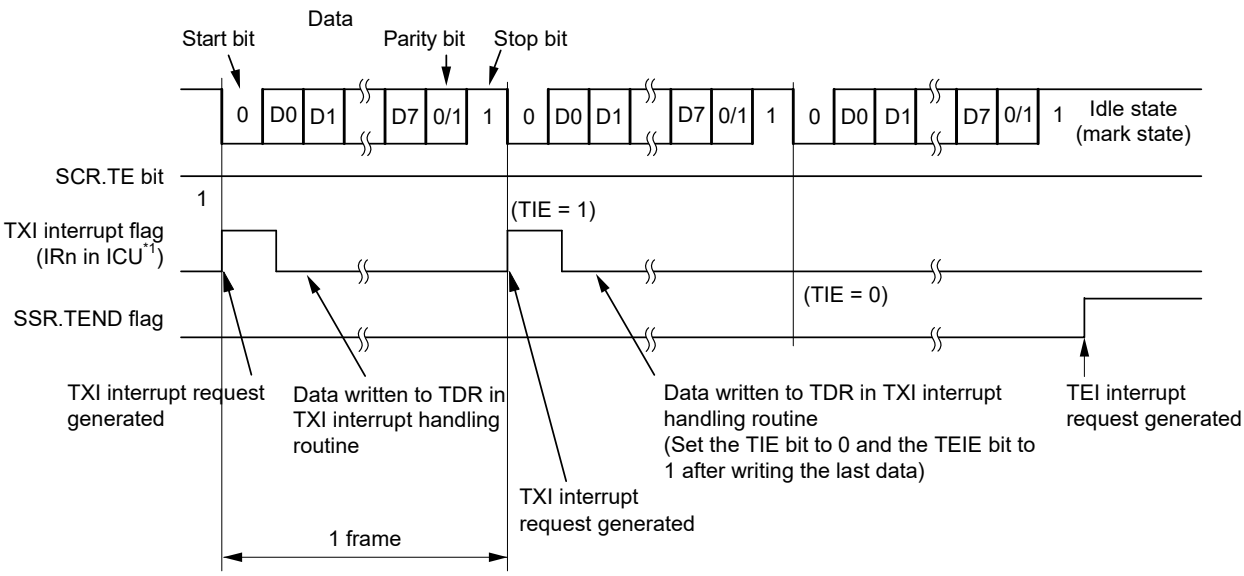

Note 1. Refer to section 14, Interrupt Controller (ICUb) for details on the corresponding interrupt vector number.

Figure 28.12 Example of Operation for Serial Transmission in Asynchronous Mode (3) (with 8-Bit Data, Parity, 1 Stop Bit, CTS Function Not Used, from the Middle of Transmission until Transmission Completion)

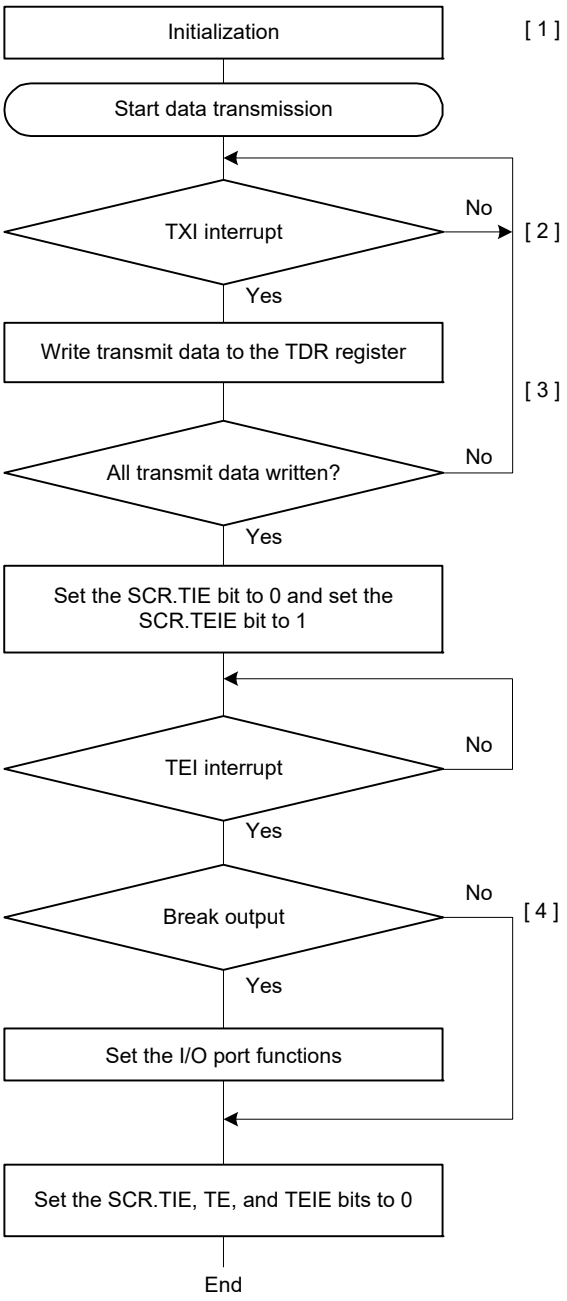

[1] SCI initialization:
Set data transmission.
After the SCR.TE bit is set to 1, high is output for a frame, and transmission is enabled.

[2] Transmit data write to the TDR register by a TXI interrupt request:
When transmit data is transferred from the TDR register to the TSR register, a transmit data empty interrupt (TXI) request is generated.
Write transmit data to the TDR register once in the TXI interrupt handling routine.

[3] Serial transmission continuation procedure:
To continue serial transmission, write transmit data to the TDR register once using a TXI interrupt request.
Transmit data can also be written to the TDR register by activating the DMAC or DTC.
When TEI interrupt requests are in use, set the SCR.TIE bit to 0 and the SCR.TEIE bit to 1 after the last of the data to be transmitted are written to the TDR register.

[4] Break output at the end of serial transmission:
To output a break in serial transmission, set the I/O port function corresponding to the TXDn pin (corresponding to output of the low level), and after switching the TXDn pin to the general I/O port function, set the SCR.TE bit to 0.

Note: The TDR register becomes the TDRH and TDRL registers when 9-bit data length is selected. Write data in the order from the TDRH register to the TDRL register.

Figure 28.13 Example of Serial Transmission Flowchart in Asynchronous Mode

28.3.8 Serial Data Reception (Asynchronous Mode)

Figure 28.14 and Figure 28.15 show an example of the operation for serial data reception in asynchronous mode. In serial data reception, the SCI operates as described below.

1. When the value of the SCR.RE bit becomes 1, the output signal on the RTSn# pin goes to the low level.
2. When the SCI monitors the communications line and detects a start bit, it performs internal synchronization, stores receive data in the RSR register, and checks the parity bit and stop bit.
3. If an overrun error occurs, the SSR.ORER flag is set to 1. If the SCR.RIE bit is 1 at this time, an ERI interrupt request is generated. Receive data is not transferred to the RDR register*1.
4. If a parity error is detected, the SSR.PER flag is set to 1 and receive data is transferred to the RDR register*1. If the SCR.RIE bit is 1 at this time, an ERI interrupt request is generated.
5. If a framing error (when the stop bit is 0) is detected, the SSR.FER flag is set to 1 and receive data is transferred to the RDR register*1. If the SCR.RIE bit is 1 at this time, an ERI interrupt request is generated.
6. When reception finishes successfully, receive data is transferred to the RDR register*1. If the SCR.RIE bit is 1 at this time, an RXI interrupt request is generated. Continuous reception is enabled by reading the receive data transferred to the RDR register*1 in this RXI interrupt handling routine before reception of the next receive data is completed. Reading the received data that have been transferred to the RDR register*1 causes the RTSn# pin to output the low level.

Note 1. Read data not in the RDR register but in the RDRH and RDRL registers when 9-bit data length is selected.
Note 2. The SCI checks for reading of the RDRL register only and does not check for reading of the RDRH register when 9-bit data length is selected.

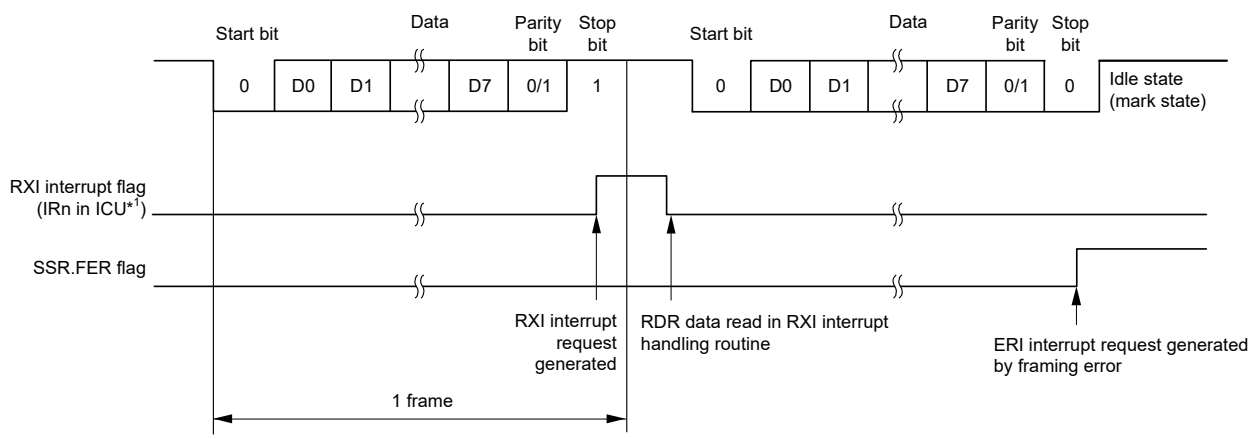

Note 1. Refer to section 14, Interrupt Controller (ICUb) for details on the corresponding interrupt vector number.

Figure 28.14 Example of SCI Operation for Serial Reception in Asynchronous Mode (1) (When RTS Function is Not Used) (Example with 8-Bit Data, Parity, 1 Stop Bit)

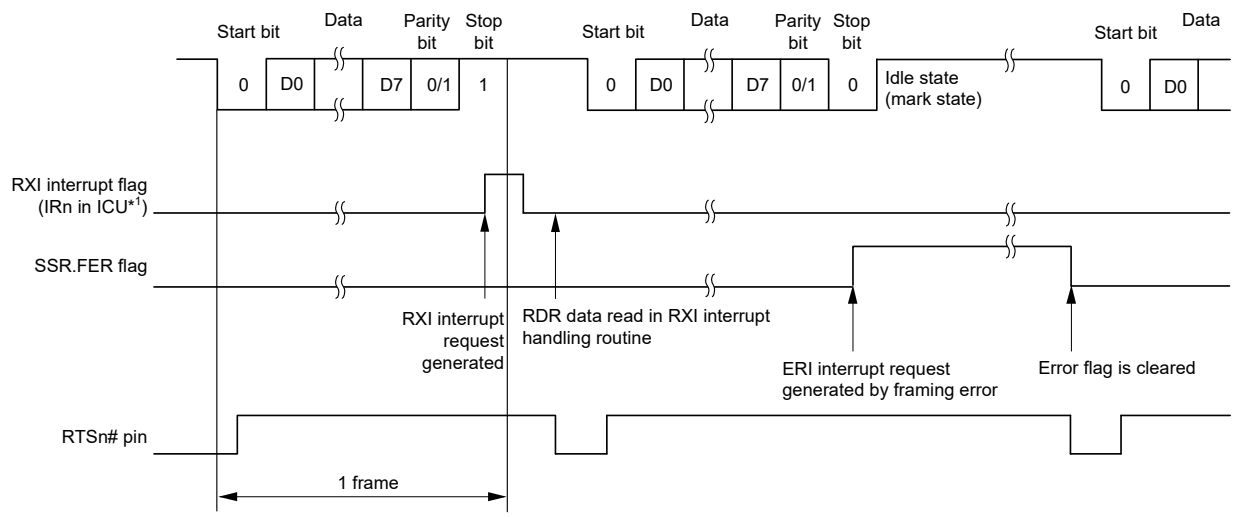

Note 1. Refer to section 14, Interrupt Controller (ICUb) for details on the corresponding interrupt vector number.

Figure 28.15 Example of SCI Operation for Serial Reception in Asynchronous Mode (2) (When RTS Function is Used) (Example with 8-Bit Data, Parity, 1 Stop Bit)

Table 28.28 lists the states of the status flags in the SSR register and receive data handling when a receive error is detected.

If a receive error is detected, an ERI interrupt request is generated but an RXI interrupt request is not generated. Data reception cannot be resumed while the receive error flag is 1. Accordingly, set the ORER, FER, and PER flags to 0 before resuming reception. Moreover, be sure to read the RDR (or the RDRL) register during overrun error processing.

When a reception is forcibly terminated by setting the SCR.RE bit to 0 during operation, read the RDR (or the RDRL) register because received data which has not yet been read may be left in the RDR (or the RDRL) register.

Figure 28.16 and Figure 28.17 show samples of flowcharts for serial data reception.

Table 28.28 Status Flags in the SSR Register and Receive Data Handling

Status Flags in the SSR Register				
ORER	**FER**	**PER**	**Receive Data**	**Receive Error Type**
1	0	0	Lost	Overrun error
0	1	0	Transferred to the RDR register*1	Framing error
0	0	1	Transferred to the RDR register*1	Parity error
1	1	0	Lost	Overrun error + framing error
1	0	1	Lost	Overrun error + parity error
0	1	1	Transferred to the RDR register*1	Framing error + parity error
1	1	1	Lost	Overrun error + framing error + parity error

Note 1. Read data not in the RDR register but in the RDRH and RDRL registers when 9-bit data length is selected.

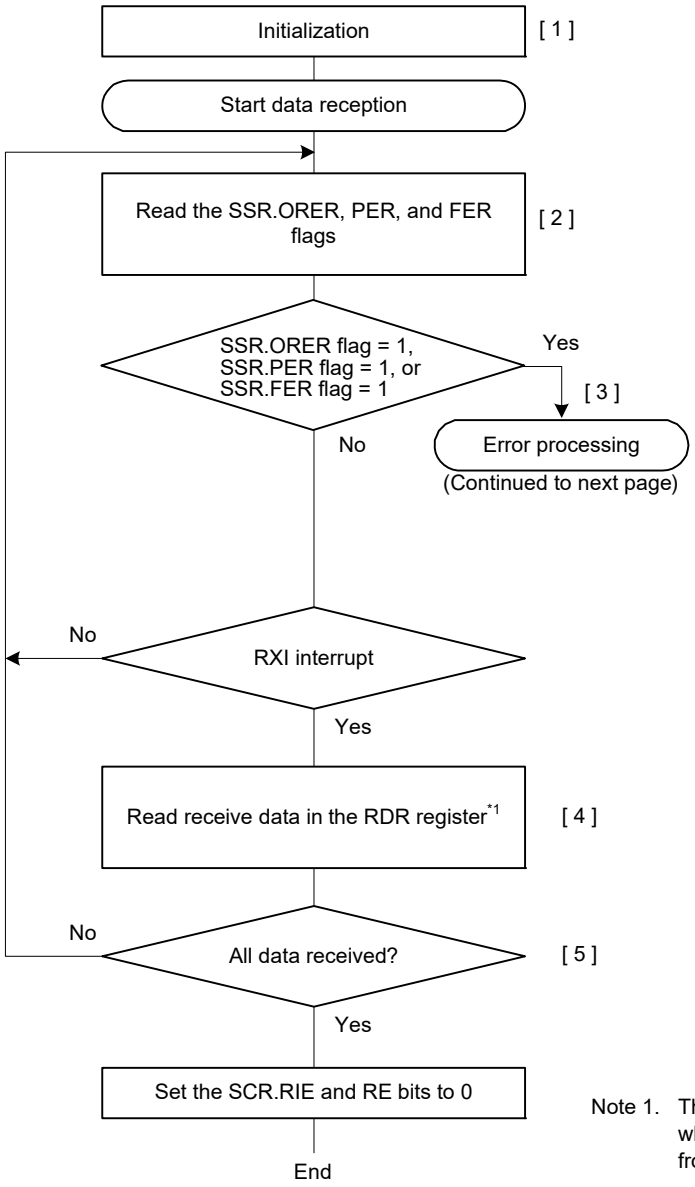

[1] SCI initialization:
Set data reception.

[2] [3] Receive error processing and break detection:
If a receive error occurs, an ERI interrupt is generated. An error is identified by reading the ORER, PER, and FER flags in the SSR register. After performing the appropriate error processing, be sure to set the ORER, PER, and FER flags to 0. Reception cannot be resumed if any of these flags is set to 1. In the case of a framing error, a break can be detected by reading the value of the input port corresponding to the RXDn pin.

[4] Read the receive data in the RDR register once in the RXI interrupt handling routine.

[5] Serial reception continuation procedure:
To continue serial reception, before the stop bit of the current frame is received, read data from the RDR register in the RXI interrupt handling routine.
The RDR data can also be read by activating the DMAC or DTC.

Note 1. The RDR register becomes the RDRH and RDRL registers when 9-bit data length is selected. Read data in the order from the RDRH register to the RDRL register.

Figure 28.16 Example Flowchart of Serial Reception in Asynchronous Mode (1)

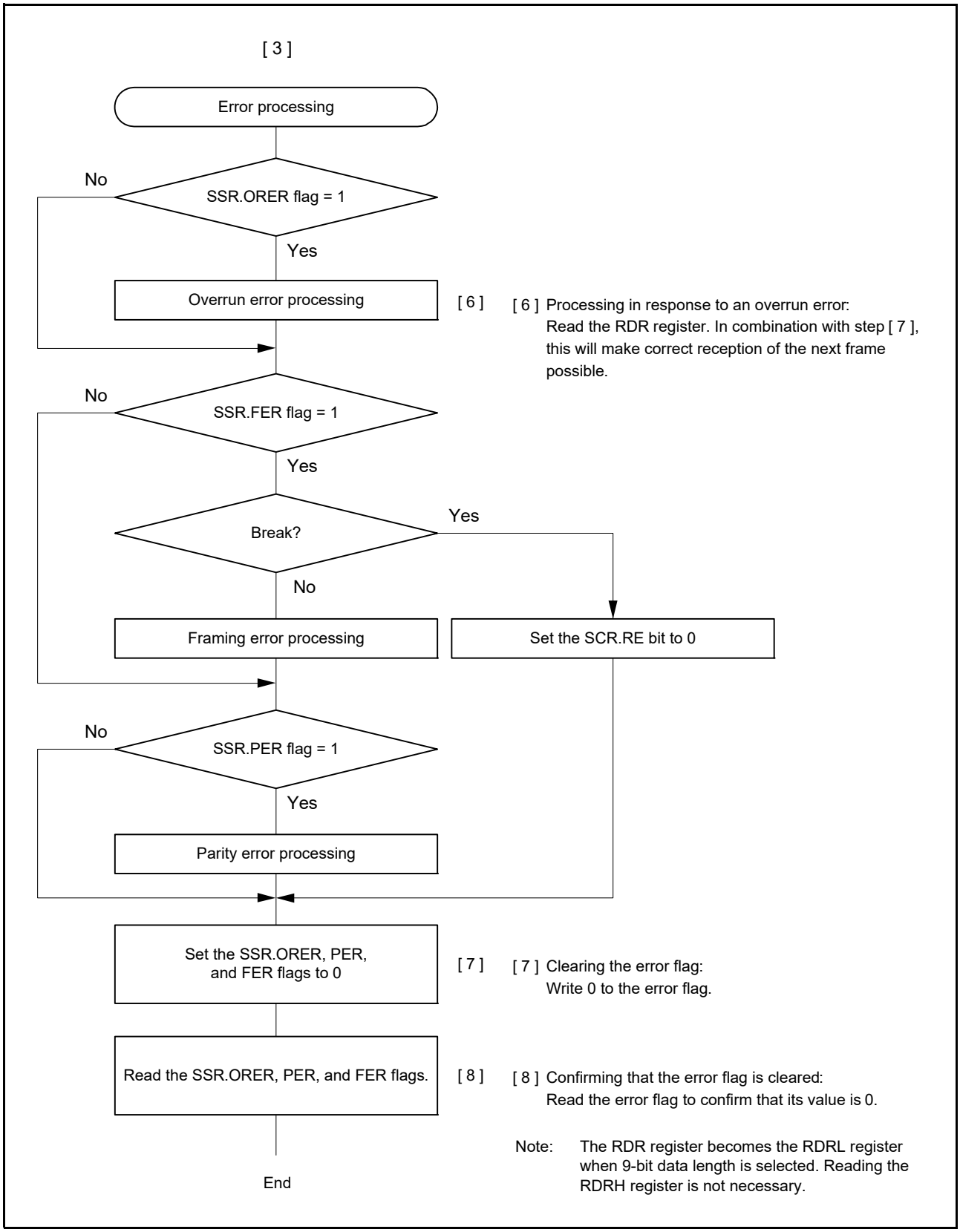

Figure 28.17 Example Flowchart of Serial Reception in Asynchronous Mode (2)

28.4 Multi-Processor Communications Function

Using the multi-processor communication functions enables to transmit and receive data by sharing a communication line between multiple processors by using asynchronous serial communication in which the multi-processor bit is added. In multi-processor communication, a unique ID code is allocated to each receiving station. Serial communication cycles consist of an ID transmission cycle to specify the receiving station and a data transmission cycle to transmit data to the specified receiving station. The multi-processor bit is used to distinguish between the ID transmission cycle and the data transmission cycle. When the multi-processor bit is set to 1, it indicates the ID transmission cycle and when the multi-processor bit is set to 0, it indicates the data transmission cycle. Figure 28.18 shows an example of communication between processors by using a multi-processor format. First, a transmitting station transmits communication data in which the multi-processor bit set to 1 is added to the ID code of the receiving station. Next, the transmitting station transmits the communication data in which the multi-processor bit set to 0 is added to the transmit data. Upon receiving the communication data in which the multi-processor bit is set to 1, the receiving station compares the received ID with the ID of the receiving station itself and if the two match, receives the communication data that is subsequently transmitted. If the received ID does not match with the ID of the receiving station, the receiving station skips the communication data until again receiving the communication data in which the multi-processor bit is set to 1.
For supporting this function, the SCI provides the SCR.MPIE bit. When the MPIE bit is set to 1, transfer of receive data from the RSR register to the RDR register (the RDRH and RDRL registers when 9-bit data length is selected), detection of a receive error, and setting the respective status flags RDRF, ORER, and FER in the SSR register are disabled until reception of data in which the multi-processor bit is set to 1. Upon receiving a reception character in which the multi-processor bit is set to 1, the SSR.MPB bit is set to 1 and the SCR.MPIE bit is automatically cleared, thus returning to a normal reception operation. During this time, an RXI interrupt is generated if the SCR.RIE bit is 1.
When the multi-processor format is specified, specification of the parity bit is disabled. Apart from this, there is no difference from the operation in the normal asynchronous mode. A clock which is used for the multi-processor communication is also the same as the clock used in the normal asynchronous mode.

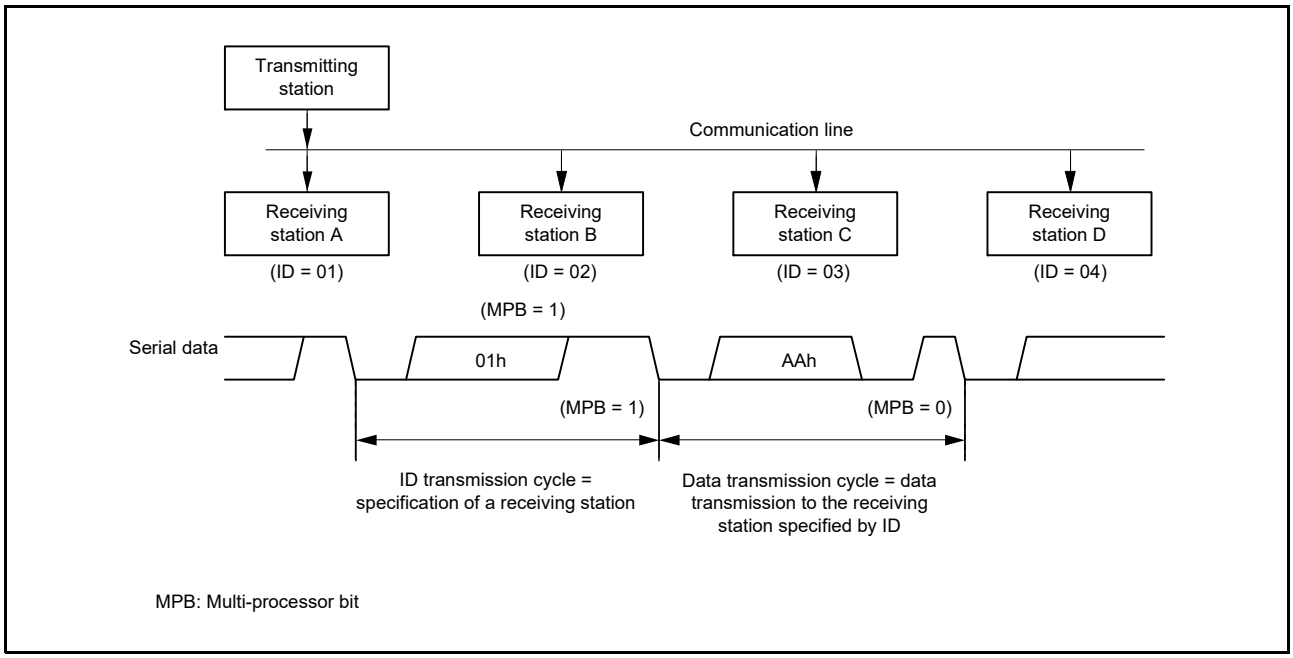

Figure 28.18 An Example of Communication using the Multi-Processor Format (Example of Transmission of Data AAh to Receiving Station A)

28.4.1 Multi-Processor Serial Data Transmission

Figure 28.19 is a sample flowchart of multi-processor data transmission. In the ID transmission cycle, the ID should be transmitted with the SSR.MPBT bit set to 1. In the data transmission cycle, the data should be transmitted with the MPBT bit set to 0. The other operations are the same as the operations in asynchronous mode.

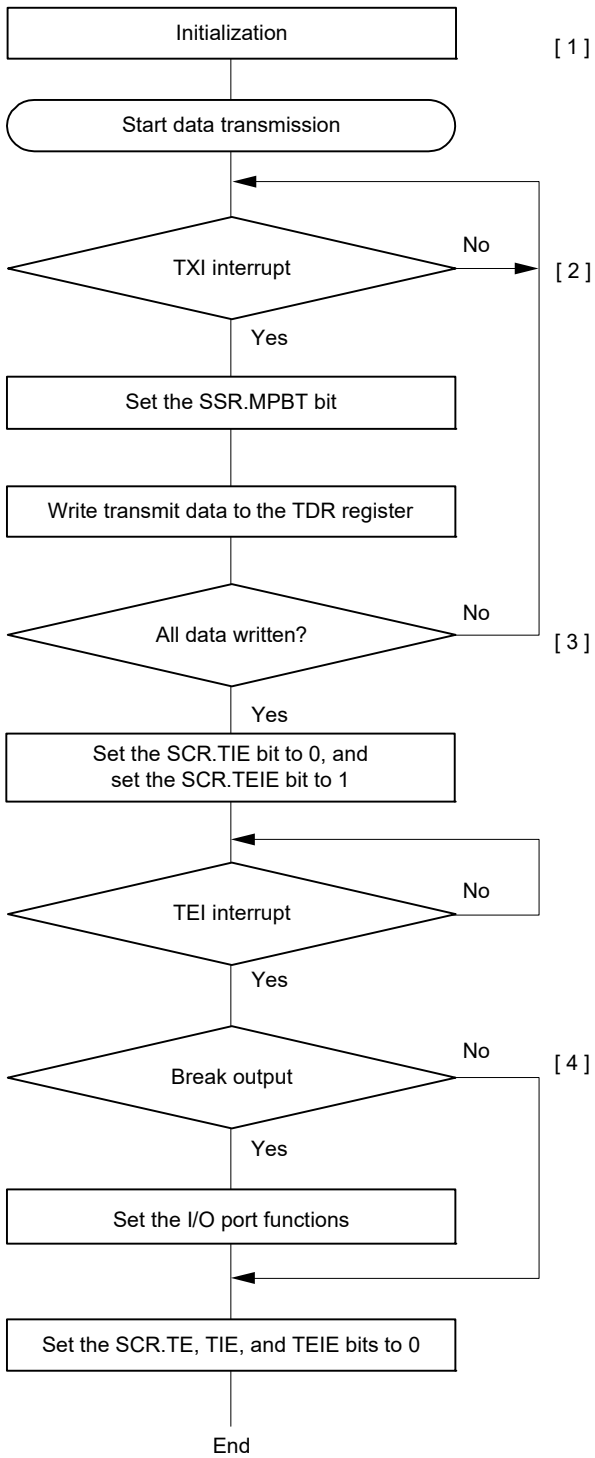

[1] SCI initialization:
Set data transmission.
After the SCR.TE bit is set to 1, high is output for a frame, and transmission is enabled.

[2] TXI interrupt request:
When transmit data is transferred from the TDR register to the TSR register, a transmit data empty interrupt (TXI) request is generated.
Set the SSR.MPBT bit to 0 or 1, and write transmit data to the TDR register once in the TXI interrupt handling routine.

[3] Serial transmission continuation procedure:
To continue serial transmission, write transmit data to the TDR register once using a TXI interrupt request.
Transmit data can also be written to the TDR register by activating the DMAC or DTC.
When TEI interrupt requests are in use, set the SCR.TIE bit to 0 and the SCR.TEIE bit to 1 after the last of the data to be transmitted are written to the TDR register.

[4] Break output at the end of serial transmission:
To output a break in serial transmission, set the I/O port function corresponding to the TXDn pin (corresponding to output of the low level), and after switching the TXDn pin to the general I/O port function, set the SCR.TE bit to 0.

Note: The TDR register becomes the TDRH and TDRL registers when 9-bit data length is selected. Write data in the order from the TDRH register to the TDRL register.

Figure 28.19 Example of Multi-Processor Serial Transmission Flowchart

28.4.2 Multi-Processor Serial Data Reception

Figure 28.21 and Figure 28.22 are sample flowcharts of multi-processor data reception. When the SCR.MPIE bit is set to 1, reading the communication data is skipped until reception of the communication data in which the multi-processor bit is set to 1. When the communication data in which the multi-processor bit is set to 1 is received, the received data is transferred to the RDR register (the RDRH and RDRL registers when 9-bit data length is selected). During this time, the RXI interrupt request is generated. The other operations are the same as the operations in asynchronous mode.
Figure 28.20 is the example of operation for reception.

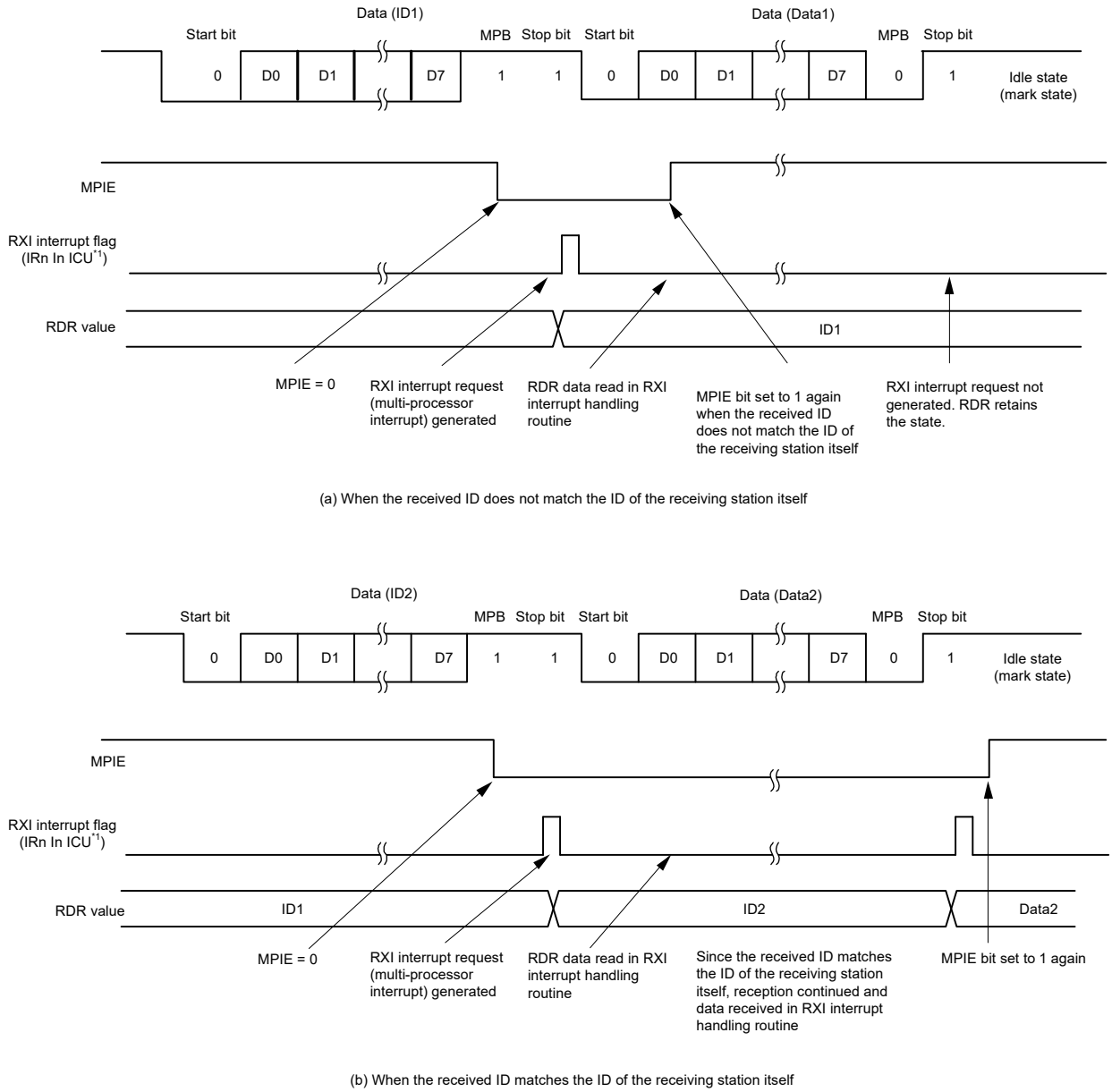

Note 1. Refer to section 14, Interrupt Controller (ICUb) for details on the corresponding interrupt vector number.

Figure 28.20 Example of SCI Reception (8-Bit Data/Multi-Processor Bit/1 Stop Bit)

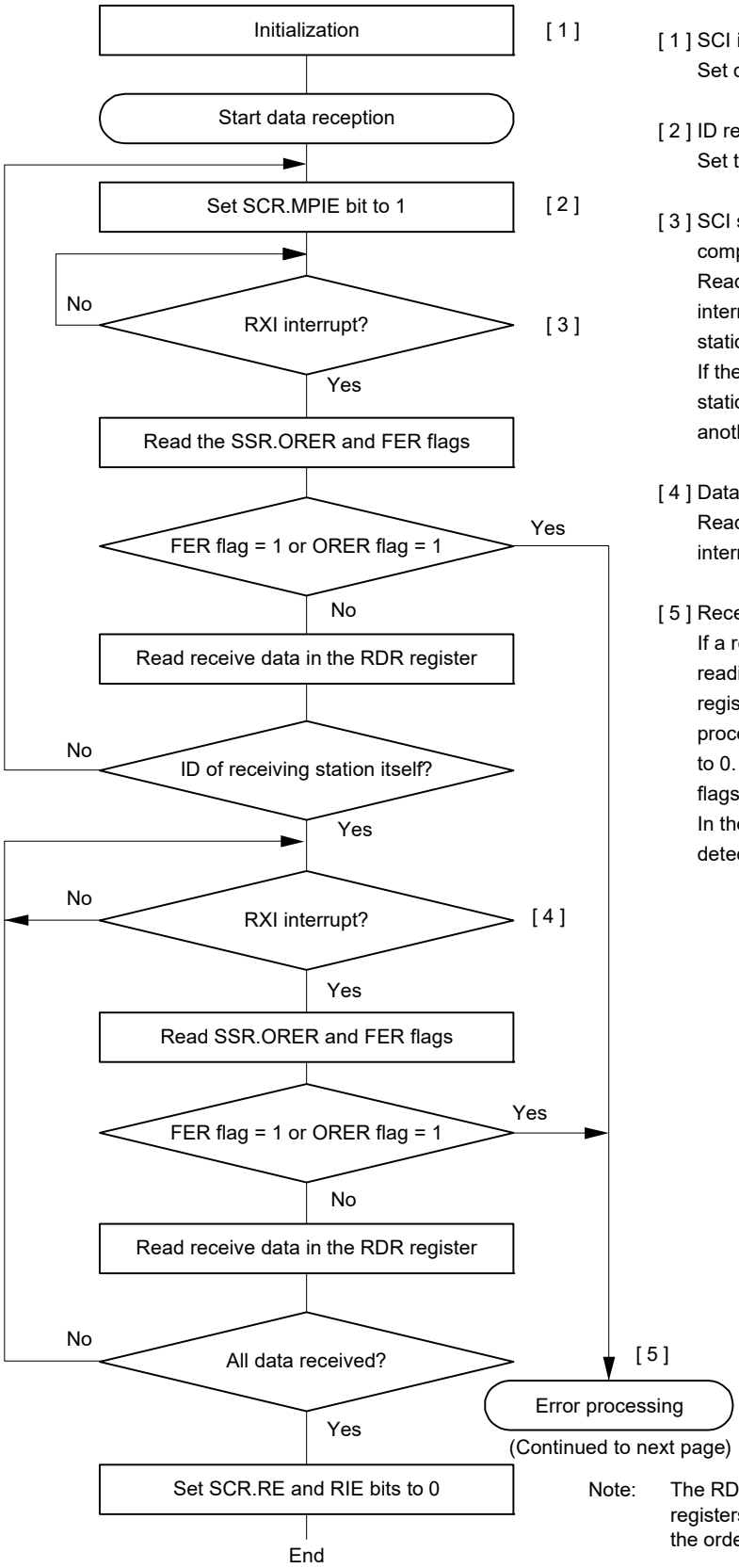

[1] SCI initialization:
Set data reception.

[2] ID reception cycle:
Set the SCR.MPIE bit to 1 and wait for ID reception.

[3] SCI status confirmation and reception and comparison of ID:
Read data in the RDR register at the first RXI interrupt, and compare it with the ID of the receiving station itself.
If the ID does not match the ID of the receiving station itself, set the MPIE bit to 1 again, and wait for another RXI interrupt request.

[4] Data reception at an RXI interrupt:
Read data in the RDR register once in the RXI interrupt routine.

[5] Receive error processing and break detection:
If a receive error occurs, an error is identified by reading the ORER and FER flags in the SSR register. After performing the appropriate error processing, be sure to set the ORER and FER flags to 0. Reception cannot be resumed if any of these flags is set to 1.
In the case of a framing error, a break can be detected by reading the value of the RXDn pin.

Note: The RDR register becomes the RDRH and RDRL registers when 9-bit data length is selected. Read data in the order from the RDRH register to the RDRL register.

Figure 28.21 Example of Multi-Processor Serial Reception Flowchart (1)

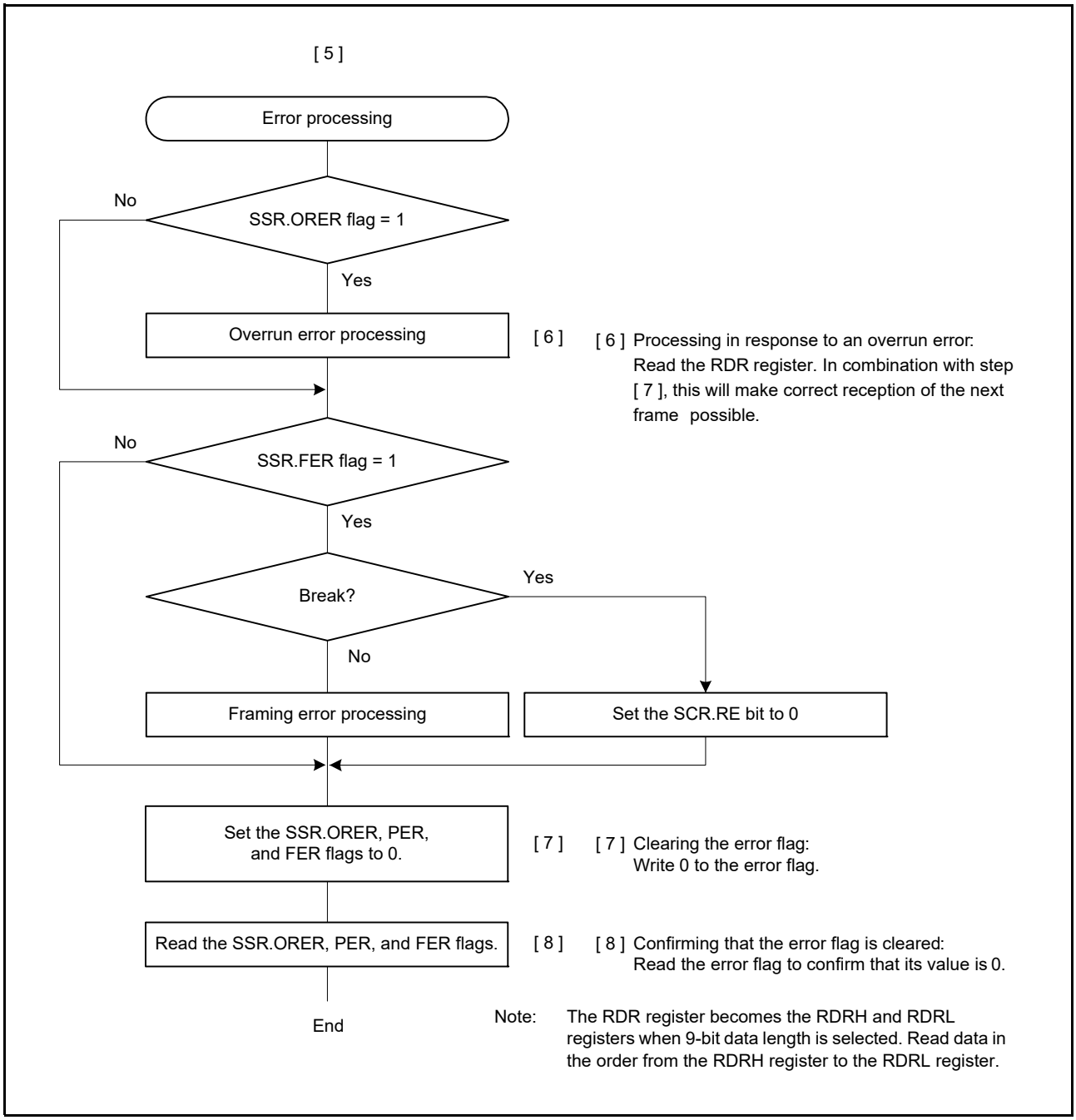

Figure 28.22 Example of Multi-Processor Serial Reception Flowchart (2)

28.5 Operation in Clock Synchronous Mode

Figure 28.23 shows the data format for clock synchronous serial data communications.
In clock synchronous mode, data is transmitted or received in synchronization with clock pulses. One character in transfer data consists of 8-bit data. In clock synchronous mode, no parity bit can be added.
In data transmission, the SCI outputs data from one falling edge of the synchronization clock to the next. In data reception, the SCI receives data in synchronization with the rising edge of the synchronization clock. After 8-bit data is output, the communication line holds the last bit output state.
Inside the SCI, the transmitter and receiver are independent units, enabling full-duplex communications by use of a common clock. Both the transmitter and the receiver also have a double-buffered structure, so that the next transmit data can be written during transmission or the previous receive data can be read during reception, enabling continuous data transfer.

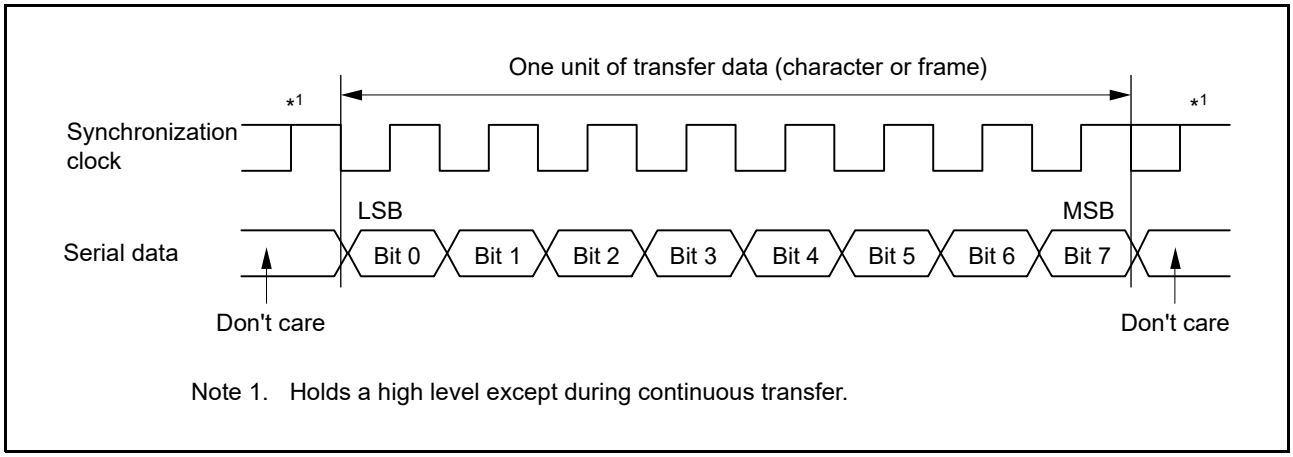

Figure 28.23 Data Format in Clock Synchronous Serial Communications (LSB First)

28.5.1 Clock

Either an internal clock generated by the on-chip baud rate generator or an external synchronization clock input at the SCKn pin can be selected, according to the setting of the SCR.CKE[1:0] bits.
When the SCI is operated on an internal clock, the synchronization clock is output from the SCKn pin. Eight synchronization clock pulses are output in the transfer of one character, and when no transfer is performed the clock is held high. However, when only data reception is performed while the CTS function is disabled, the synchronization clock output is started at the same time when the SCR.RE bit set to 1. The synchronization clock is stopped at the high level when an overrun error occurs or the SCR.RE bit is set to 0.
When only data reception is performed and the CTS function is enabled, the clock output is not started even when the SCR.RE bit set to 1 if the CTSn# pin input is high when the SCR.RE bit is 0. The synchronization clock output is started when the SCR.RE bit is set to 1 and the CTSn# pin input is low. After that, if the CTSn# pin input is high on completion of the frame reception, the synchronization clock output is stopped at the high level. If the CTSn# pin input continues to be low, the synchronization clock is stopped at the high level when an overrun error occurs or the SCR.RE bit is set to 0.

28.5.2 CTS and RTS Functions

In the CTS function, CTSn# pin input is used to control reception/transmission start when the clock source is the internal clock. Setting the SPMR.CTSE bit to 1 enables the CTS function.
When the CTS function is enabled, placing the low level on the CTSn# pin causes reception/transmission to start. Applying the high level to the CTS# pin while reception/transmission are in progress does not affect reception/transmission of the current frame, which continues.
In the RTS function, RTSn# pin output is used to request reception/transmission start when the clock source is an external synchronizing clock. A low level is output when serial communications become possible. Conditions for output of the low and high level are shown below.

[Conditions for low-level output]
When the following conditions are all satisfied.

- The SCR.RE or SCR.TE bit is 1.
- Transmission or reception is not in progress.
- There are no received data yet to be read (when the SCR.RE bit is 1).
- Untransmitted data is present (when the SCR.TE bit is 1).
- The SSR.ORER flag is 0.

[Condition for high-level output]
The conditions for low-level output have not been satisfied.

28.5.3 SCI Initialization (Clock Synchronous Mode)

Before transmitting and receiving data, start by writing the initial value 00h to the SCR register and then continue through the procedure for SCI given in Figure 28.24. Whenever the operating mode or transfer format is changed, the SCR register must be initialized before the change is made.
Note that setting the SCR.RE bit to 0 initializes neither the ORER, FER, and PER flags in the SSR register nor the RDR register.

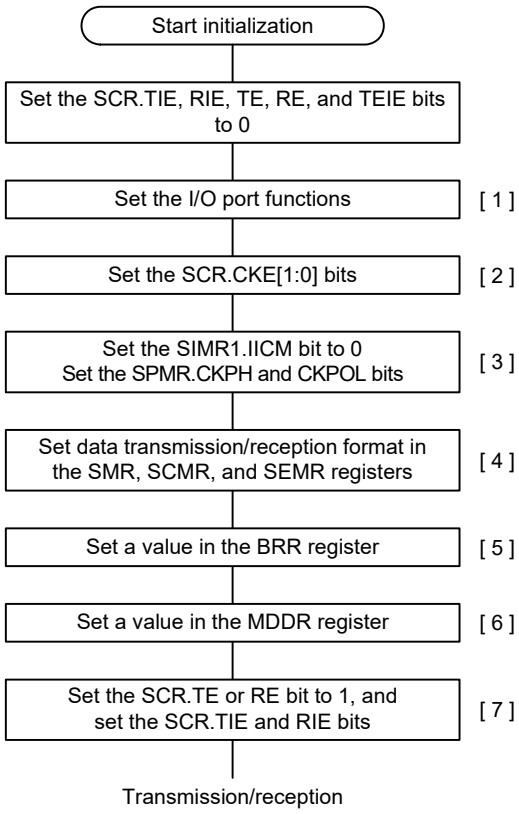

[1] Make I/O port settings to enable input and output functions as required for TXDn, RXDn, and SCKn pins.

[2] Set the clock selection in the SCR register.
When an internal clock is selected, the SCK pin functions as the clock output pin.

[3] Set the SIMR1.IICM bit to 0.
Set the SPMR.CKPH and CKPOL bits.
Step [3] can be skipped if the values have not been changed from the initial values.

[4] Set the data transmission/reception format in the SMR, SCMR, and SEMR registers.

[5] Write a value corresponding to the bit rate to the BRR register. This step is not necessary if an external clock is used.

[6] Write the value obtained by correcting a bit rate error in the MDDR register. This step is not necessary if the SEMR.BRME bit is set to 0 or an external clock is used.

[7] Set the SCR.TE or RE bit to 1. At this time, also set the SCR.TIE and RIE bits.
Setting the TE and RE bits allows TXDn and RXDn to be used.

Note: In simultaneous transmit and receive operations, the SCR.TE and RE bits should both be set to 0 or 1 simultaneously.

Figure 28.24 Example of SCI Initialization Flowchart (Clock Synchronous Mode)

28.5.4 Serial Data Transmission (Clock Synchronous Mode)

Figure 28.25, Figure 28.26, and Figure 28.27 show an example of the operation for serial transmission in clock synchronous mode.
In serial data transmission, the SCI operates as described below.

1. The SCI transfers data from the TDR register to the TSR register when data is written to the TDR register in the TXI interrupt handling routine. The TXI interrupt request at the beginning of transmission is generated when the SCR.TE bit is set to 1 after the SCR.TIE bit is set to 1 or when these 2 bits are set to 1 simultaneously by a single instruction.
2. After transferring data from the TDR register to the TSR register, the SCI starts transmission. When the SCR.TIE bit is set to 1 at this time, a TXI interrupt request is generated. Continuous transmission is enabled by writing the next transmit data to the TDR register in this TXI interrupt handling routine before transmission of the current transmit data has finished. When TEI interrupt requests are in use, set the SCR.TIE bit to 0 (a TXI interrupt request is disabled) and the SCR.TEIE bit to 1 (a TEI interrupt request is enabled) after the last of the data to be transmitted are written to the TDR register from the handling routine for TXI requests.
3. 8-bit data is sent from the TXDn pin in synchronization with the output clock when clock output mode has been specified and in synchronization with the input clock when use of an external clock has been specified. Output of the clock signal is suspended until the input CTS signal is at the low level while the SPMR.CTSE bit is 1 (CTS function is enabled).
4. The SCI checks for updating of (writing to) the TDR register at the time of the last bit output.
5. When TDR is updated, the next transmit data is transferred from the TDR register to the TSR register, and serial transmission of the next frame is started.
6. If the TDR register is not updated, set the SSR.TEND flag to 1 and the TXDn pin retains the output state of the last bit. If the SCR.TEIE bit is 1 at this time, a TEI interrupt request is generated. The SCKn pin is held high.

Figure 28.28 shows a sample flowchart of serial data transmission.
Transmission will not start while a receive error flag (ORER, FER, or PER in the SSR register) is set to 1. Be sure to set the receive error flags to 0 before starting transmission. Note that setting the SCR.RE bit to 0 does not clear the receive error flags.

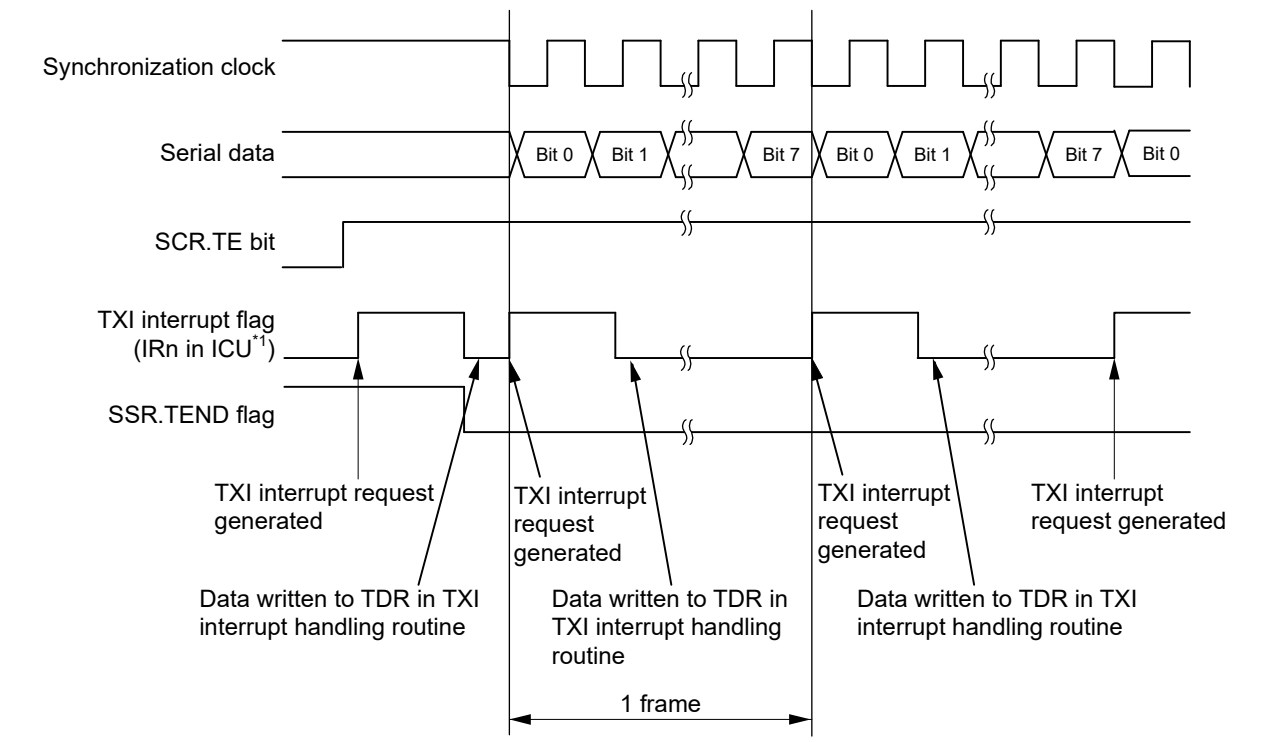

Note 1. Refer to section 14, Interrupt Controller (ICUb) for details on the corresponding interrupt vector number.

Figure 28.25 Example of Serial Data Transmission in Clock Synchronous Mode When the CTS Function is Not Used at the Beginning of Transmission

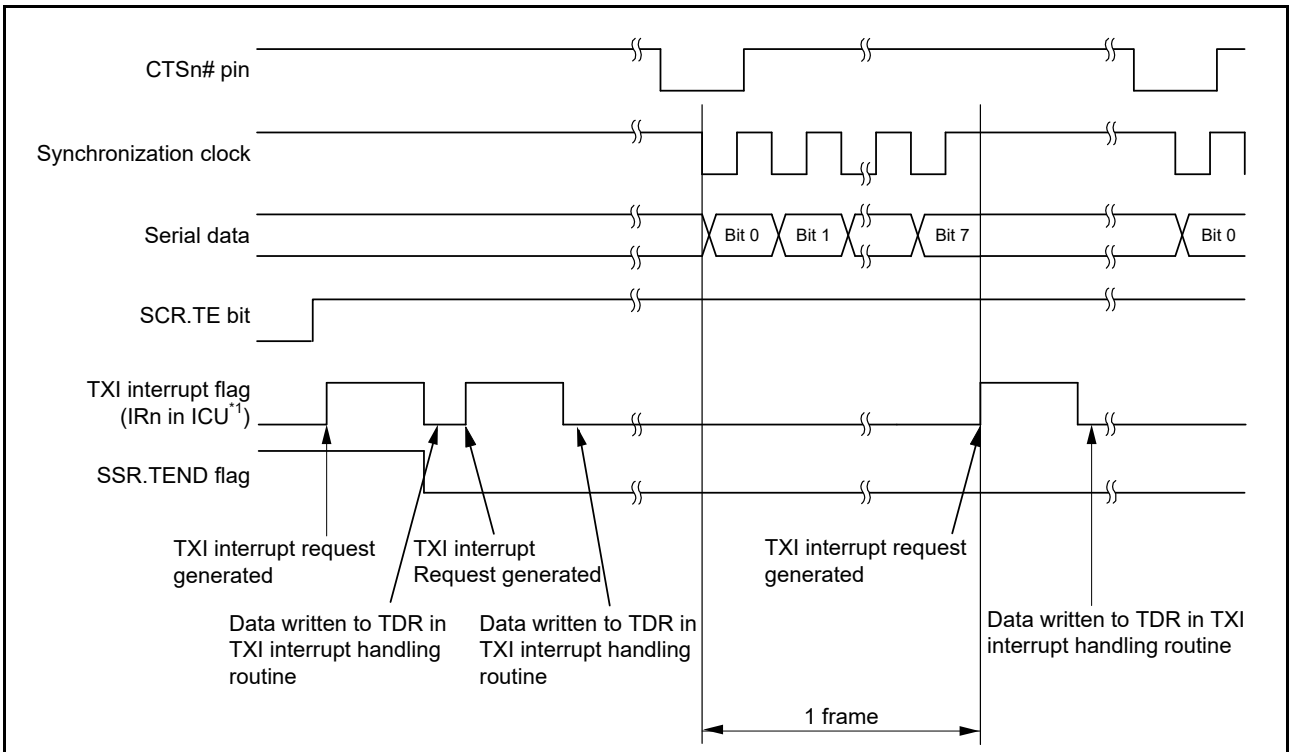

Note 1. Refer to section 14, Interrupt Controller (ICUb) for details on the corresponding interrupt vector number.

Figure 28.26 Example of Serial Data Transmission in Clock Synchronous Mode When the CTS Function is Used at the Beginning of Transmission

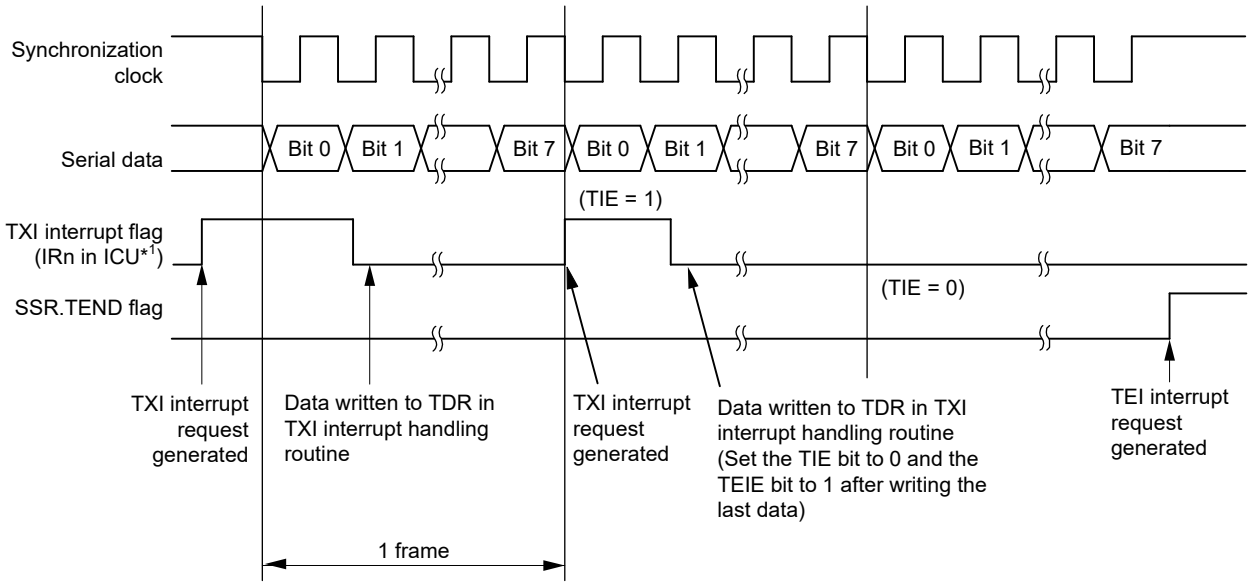

Note 1. Refer to section 14, Interrupt Controller (ICUb) for details on the corresponding interrupt vector number.

Figure 28.27 Example of Serial Data Transmission in Clock Synchronous Mode from the Middle of Transmission until Transmission Completion

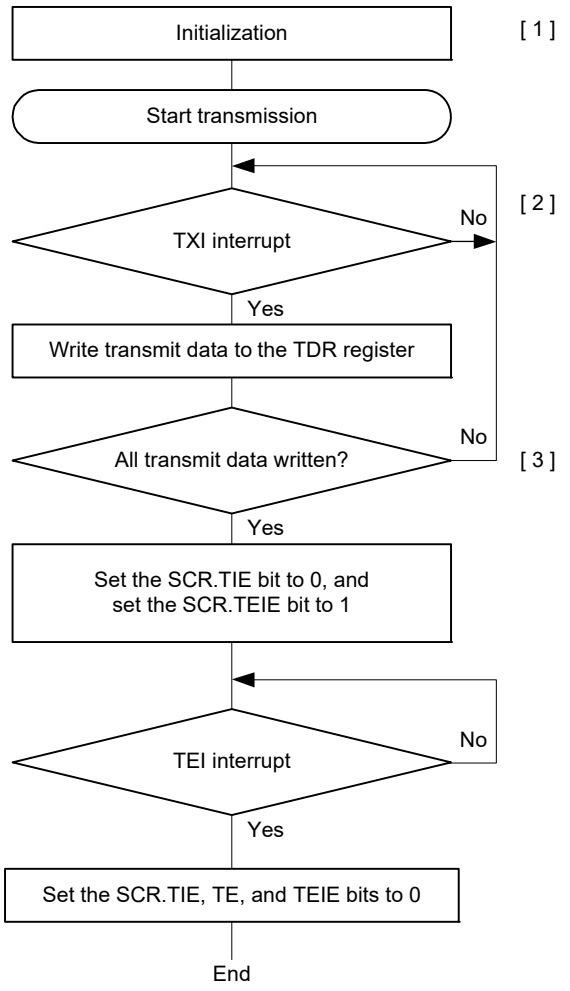

[1] SCI initialization:
Set data transmission.

[2] Writing transmit data write to the TDR register by a TXI interrupt request:
When transmit data is transferred from the TDR register to the TSR register, a transmit data empty interrupt (TXI) request is generated.
Transmit data is written to the TDR register once from the handling routine for TXI requests.

[3] Serial transmission continuation procedure:
To continue serial transmission, write transmit data to the TDR register upon accepting a transmit data empty interrupt (TXI) request. Transmit data can also be written to the TDR register by activating the DMAC or DTC by the TXI interrupt request.
When TEI interrupt requests are in use, set the SCR.TIE bit to 0 and the SCR.TEIE bit to 1 after the last of the data to be transmitted are written to the TDR register.

Note: When the external clock is in use (the value of the SCR.CKE[1:0] bits is 10b or 11b), the rising edge on the SCK pin for the last bit sets the SSR.TEND flag to 1. Setting the SCR.TE bit to 0 immediately after this may lead to insufficient received-data hold time on the receiver side.

Figure 28.28 Example Flowchart of Serial Transmission in Clock Synchronous Mode

28.5.5 Serial Data Reception (Clock Synchronous Mode)

Figure 28.29 and Figure 28.30 show an example of SCI operation for serial reception in clock synchronous mode. In serial data reception, the SCI operates as described below.

1. The value of the SCR.RE bit becoming 1 places the signal output on the RTSn# pin at the low level (when the RTS function is in use).
2. The SCI performs internal initialization and starts receiving data in synchronization with a synchronization clock input or output, and stores the receive data in the RSR register.
3. If an overrun error occurs, the SSR.ORER flag is set to 1. If the SCR.RIE bit is 1 at this time, an ERI interrupt request is generated. Receive data is not transferred to the RDR register.
4. When reception finishes successfully, receive data is transferred to the RDR register. If the SCR.RIE bit is 1 at this time, an RXI interrupt request is generated. Continuous reception is enabled by reading the receive data transferred to the RDR register in this RXI interrupt handling routine before reception of the next receive data is completed. Reading out the received data that have been transferred to the RDR register causes the RTSn# pin to output the low level (when the RTS function is in use).

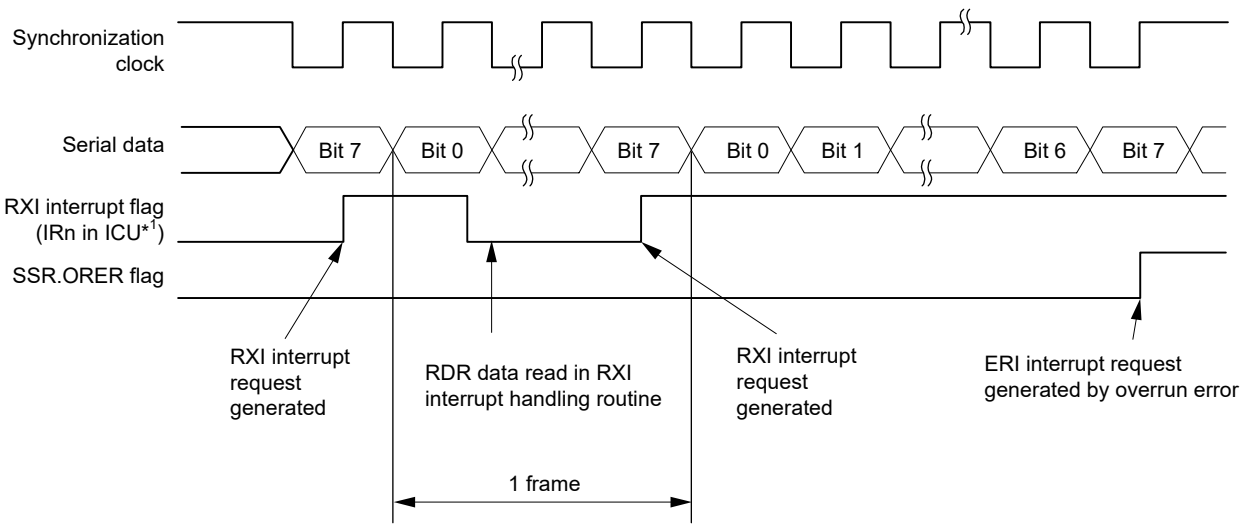

Note 1. Refer to section 14, Interrupt Controller (ICUb) for details on the corresponding interrupt vector number.

Figure 28.29 Example of Operation for Serial Reception in Clock Synchronous Mode (1) (When RTS Function is Not Used)

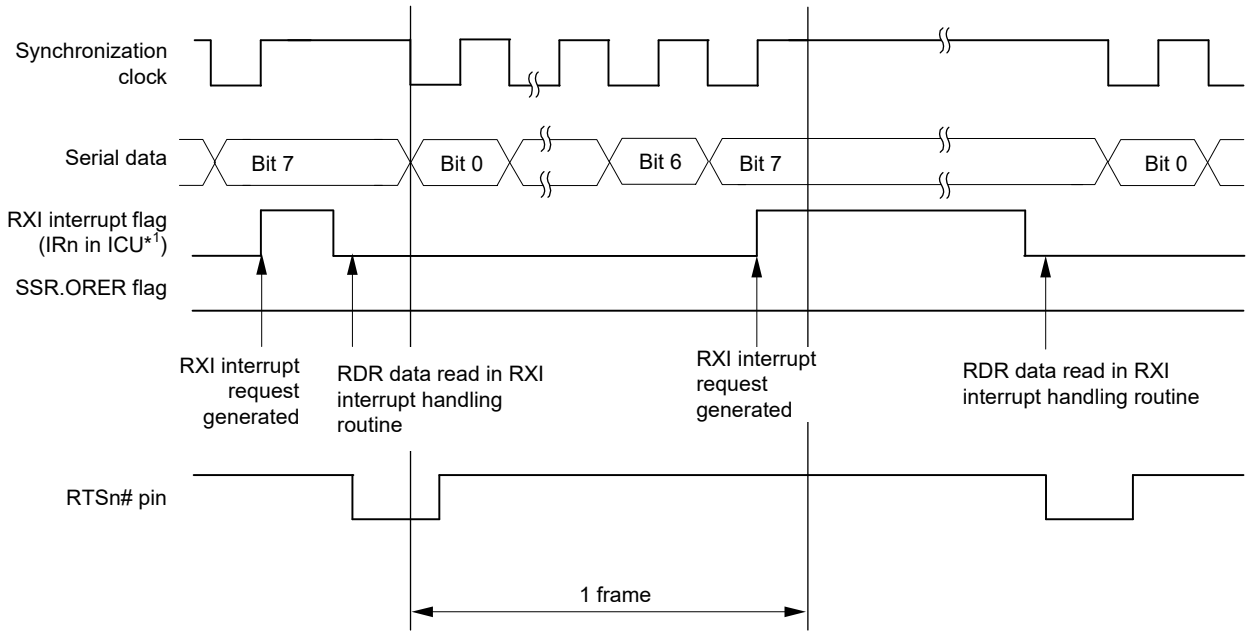

Note 1. Refer to section 14, Interrupt Controller (ICUb) for details on the corresponding interrupt vector number.

Figure 28.30 Example of Operation for Serial Reception in Clock Synchronous Mode (2) (When RTS Function is Used)

Data transfer cannot be resumed while a receive error flag is 1. Accordingly, clear the ORER, FER, and PER flags in the SSR register before resuming reception. Moreover, be sure to read the RDR register during overrun error processing. When a reception is forcibly terminated by setting the SCR.RE bit to 0 during operation, read the RDR register because received data which has not yet been read may be left in the RDR register.

Figure 28.31 shows a sample flowchart for serial data reception.

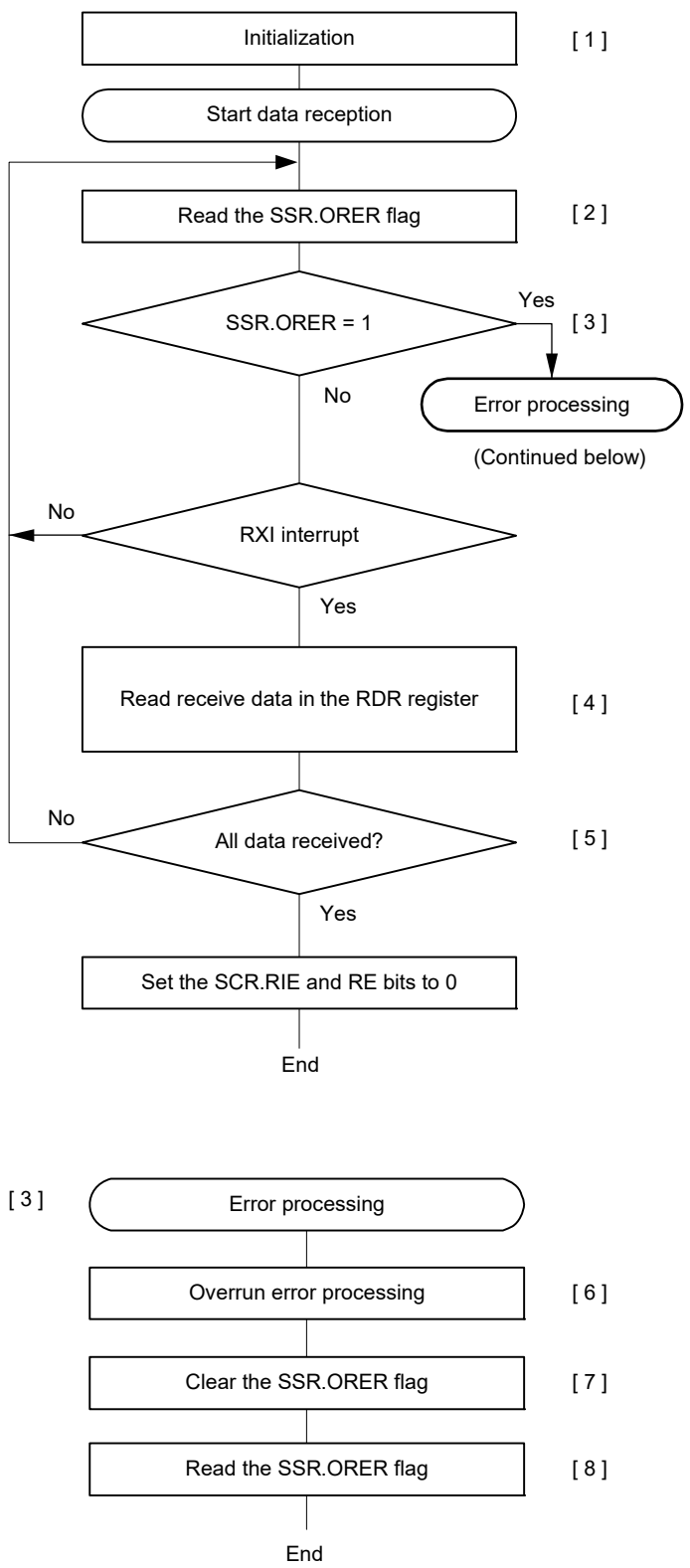

[1] SCI initialization:
Make input port-pin settings for pins to be used as RXDn pins.

[2] [3] Receive error processing:
If a receive error occurs, read the SSR.ORER flag, perform the relevant error processing, and then set the ORER flag to 0. Data reception cannot be resumed while the ORER flag is 1.

[4] Read the receive data in the RDR register once in the receive data full interrupt (RXI) request handling routine.

[5] Serial reception continuation procedure:
To continue serial reception, before the MSB (bit 7) of the current frame is received, finish reading the receive data in the RDR register. The RDR data can also be read by activating the DMAC or DTC by an RXI interrupt request.

[6] Processing in response to an overrun error:
Read the RDR register. In combination with step [7], this will make correct reception of the next frame possible.

[7] Clearing the error flag:
Write 0 to the error flag.

[8] Confirming that the error flag is cleared:
Read the error flag to confirm that its value is 0.

Figure 28.31 Example Flowchart of Serial Reception in Clock Synchronous Mode

28.5.6 Simultaneous Serial Data Transmission and Reception (Clock Synchronous Mode)

Figure 28.32 shows a sample flowchart for simultaneous serial transmit and receive operations in clock synchronous mode.

After initializing the SCI, the following procedure should be used for simultaneous serial data transmit and receive operations.

To switch from transmit mode to simultaneous transmit and receive mode, check that the SCI has finished transmission by reading that the SSR.TEND flag is 1, and then initialize the SCR register. Then set the TIE, RIE, TE, and RE bits in the SCR register to 1 simultaneously by a single instruction.

To switch from receive mode to simultaneous transmit and receive mode, check that the SCI has finished reception, and then set the RIE and RE bits to 0. Then check that the receive error flags (ORER, FER, and PER in the SSR register) are 0, and then set the TIE, RIE, TE, and RE bits in the SCR register to 1 simultaneously by a single instruction.

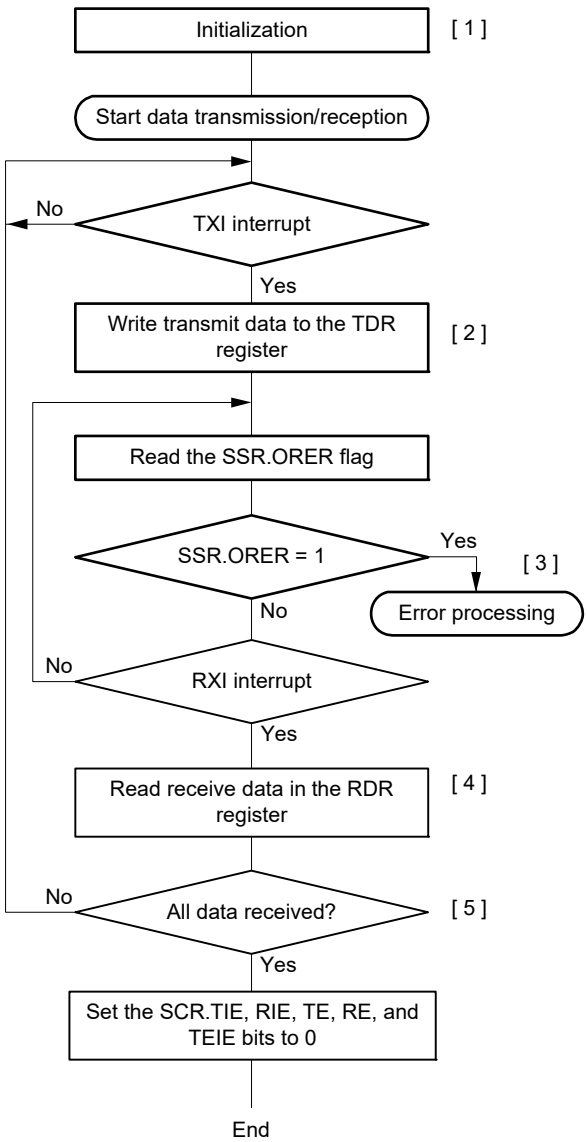

[1] SCI initialization:
The TXDn pin can act as the output pin for transmitted data and the RXDn pin can act as the input pin for received data at the same time.

[2] Transmit data write:
Write transmit data to the TDR register once in the TXI interrupt handling routine.

[3] Receive error processing:
If a receive error occurs, read the SSR.ORER flag, perform the relevant error processing, and then set the ORER flag to 0. Data reception cannot be resumed while the ORER flag is 1.

[4] Reading receive data:
Read the receive data in the RDR register once in the RXI interrupt request handling routine.

[5] Serial transmission/reception continuation procedure:
To continue serial transmission and reception, before the MSB (bit 7) of the current frame is received, finish reading the receive data in the RDR register by the RXI interrupt. Also, before the MSB (bit 7) of the current frame is transmitted, write data to the TDR register by the TXI interrupt. Transmit data can also be written to the TDR register by activating the DMAC or DTC by a transmit data empty interrupt (TXI) request. Similarly, the RDR data can also be read by activating the DMAC or DTC by a receive data full interrupt (RXI) request.

Note: When switching from transmit or receive operation to simultaneous transmit and receive operations first set the TIE, RIE, TE, RE, and TEIE bits in the SCR register to 0, and then set TIE, RIE, TE, and RE bits to 1 simultaneously.

Figure 28.32 Example Flowchart of Simultaneous Serial Transmission and Reception in Clock Synchronous Mode

28.6 Operation in Smart Card Interface Mode

The SCI supports smart card (IC card) interfaces conforming to ISO/IEC 7816-3 (standard for Identification Cards), as an extended function of the SCI.
Smart card interface mode can be selected using the appropriate register.

28.6.1 Sample Connection

Figure 28.33 shows a sample connection between a smart card (IC card) and this MCU.
As in the figure, since this MCU communicates with an IC card using a single transmission line, interconnect the TXDn and RXDn pins and pull up the data transmission line to VCC using a resistor.
Setting the TE and RE bits in the SCR register to 1 with an IC card disconnected enables closed transmission/reception allowing self-diagnosis.
To supply an IC card with the clock pulses generated by the SCI, input the SCKn pin output to the CLK pin of an IC card.
The output port of the this MCU can be used to output a reset signal.

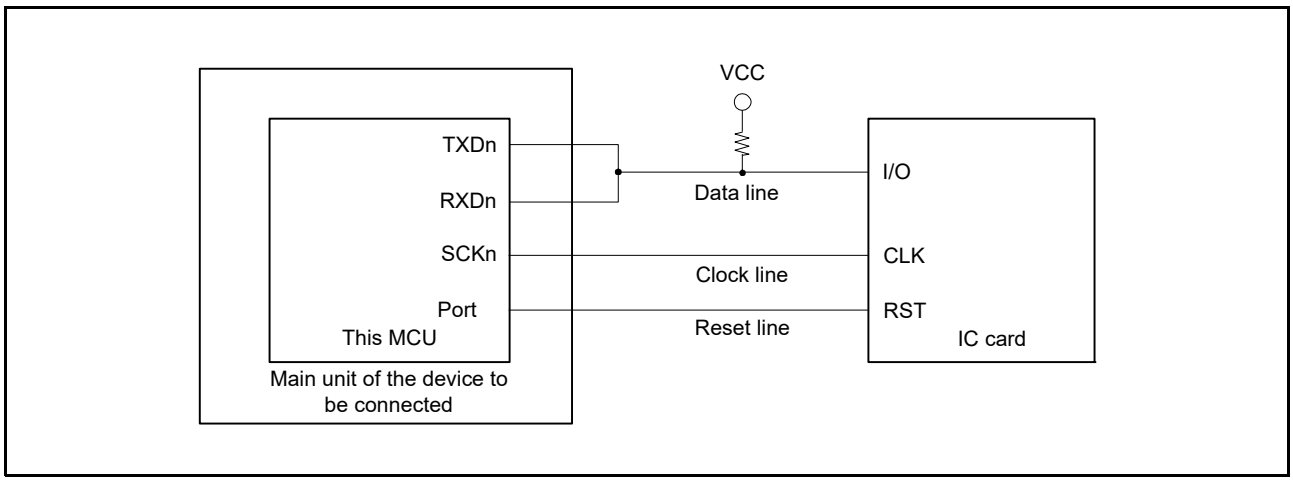

Figure 28.33 Sample Connection with a Smart Card (IC Card)

28.6.2 Data Format (Except in Block Transfer Mode)

Figure 28.34 shows the data transfer formats in smart card interface mode.

- One frame consists of 8-bit data and a parity bit in asynchronous mode.
- During transmission, at least 2 etu (elementary time unit: time required for transferring 1 bit) is secured as a guard time from the end of the parity bit until the start of the next frame.
- If a parity error is detected during reception, a low-level error signal is output for 1 etu after 10.5 etu has passed from the start bit.
- If an error signal is sampled during transmission, the same data is automatically retransmitted after at least 2 etu.

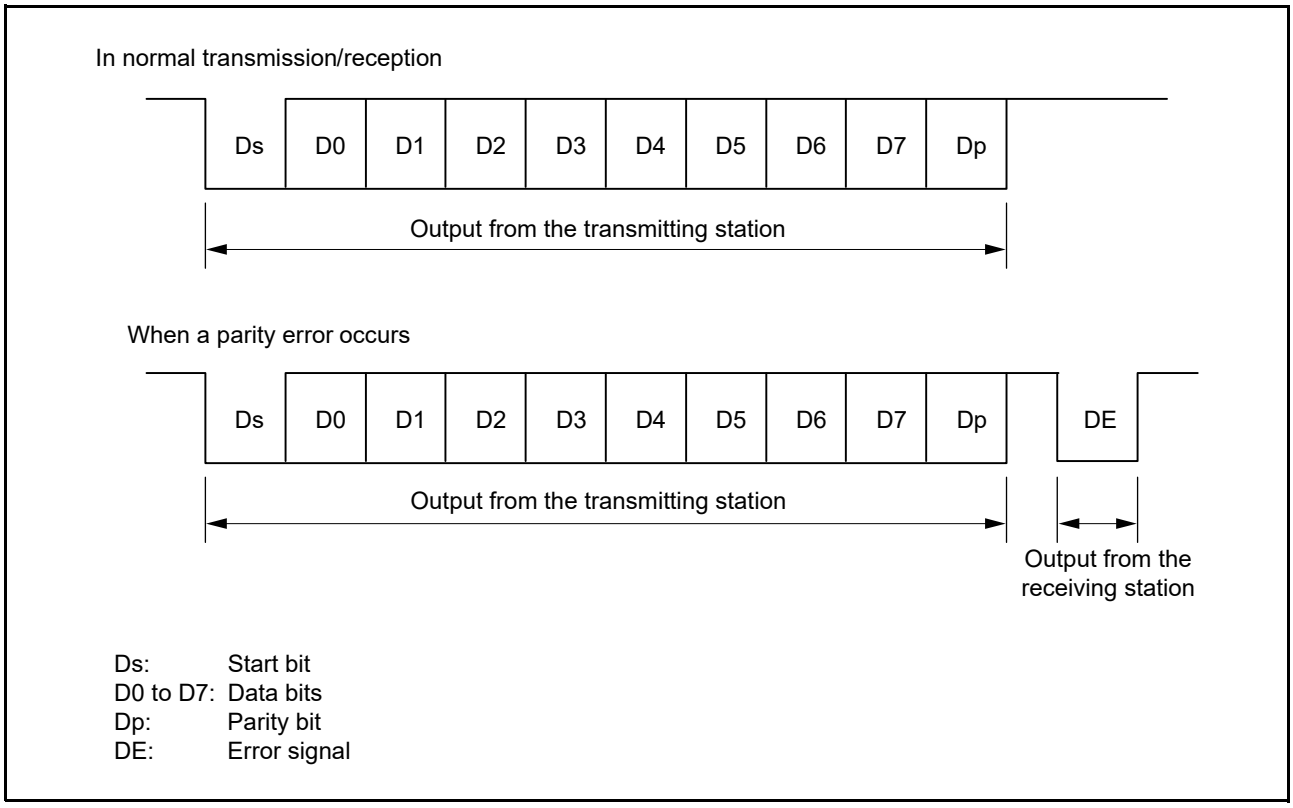

Figure 28.34 Data Formats in Smart Card Interface Mode

For communications with IC cards of the direct convention type and inverse convention type, follow the procedure below.

(1) Direct Convention Type

For the direct convention type, logic levels 1 and 0 correspond to states Z and A, respectively, and data is transferred with LSB first as the start character, as shown in Figure 28.35. Therefore, data in the start character in the figure is 3Bh. When using the direct convention type, write 0 to both the SDIR and SINV bits in the SCMR register. Write 0 to the SMR.PM bit in order to use even parity, which is prescribed by the smart card standard.

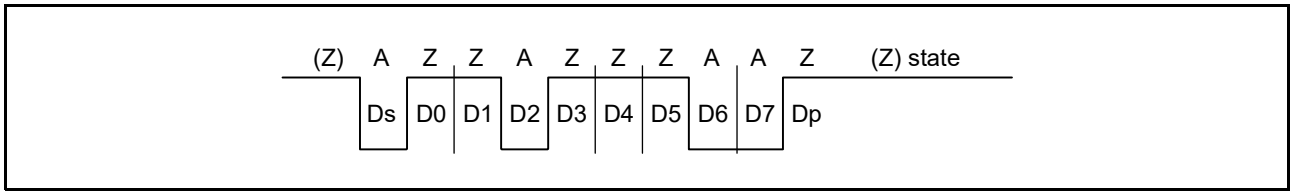

Figure 28.35 Direct Convention (SCMR.SDIR bit = 0, SCMR.SINV bit = 0, SMR.PM bit = 0)

(2) Inverse Convention Type

For the inverse convention type, logic levels 1 and 0 correspond to states A and Z, respectively and data is transferred with MSB first as the start character, as shown in Figure 28.36. Therefore, data in the start character in the figure is 3Fh. When using the inverse convention type, write 1 to both the SDIR and SINV bits in the SCMR register. The parity bit is logic level 0 to produce even parity, which is prescribed by the smart card standard, and corresponds to state Z. Since the SINV bit of the this MCU only inverts data bits D7 to D0, write 1 to the SMR.PM bit to invert the parity bit for both transmission and reception.

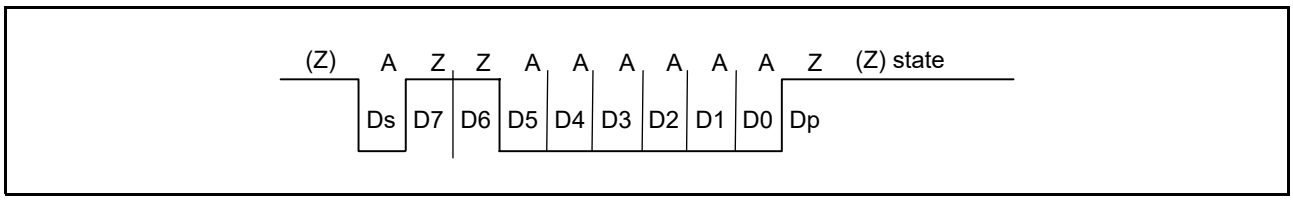

Figure 28.36 Inverse Convention (SCMR.SDIR bit = 1, SCMR.SINV bit = 1, SMR.PM bit = 1)

28.6.3 Block Transfer Mode

Block transfer mode is different from non-block transfer mode in the following respects.

- Even if a parity error is detected during reception, no error signal is output. Since the SSR.PER flag is set by error detection, clear the PER flag before receiving the parity bit of the next frame.
- During transmission, at least 1 etu is secured as a guard time from the end of the parity bit until the start of the next frame.
- Since the same data is not retransmitted during transmission, the SSR.TEND flag is set 11.5 etu after transmission start.
- In block transfer mode, the SSR.ERS flag indicates the error signal status as in non-block transfer mode, but the flag is read as 0 because no error signal is transferred.

28.6.4 Receive Data Sampling Timing and Reception Margin

Only the base clock generated by the on-chip baud rate generator can be used as a transmit/receive clock in smart card interface mode.

In this mode, the SCI can operate on a base clock with a frequency of 32, 64, 372, 256, 93, 128, 186, or 512 times the bit rate according to the settings of the SCMR.BCP2 bit and the SMR.BCP[1:0] bits.

For data reception, the falling edge of the start bit is sampled with the base clock to perform synchronization. Receive data is sampled on the 16th, 32nd, 186th, 128th, 46th, 64th, 93rd, and 256th rising edges of the base clock so that it can be latched at the middle of each bit as shown in Figure 28.37. The reception margin here is determined by the following formula.

$$M = \left| \left(0.5 - \frac{1}{2N}\right) - (L - 0.5)F - \frac{|D - 0.5|}{N}(1 + F) \right| \times 100\ (\%)$$

M: Reception margin (%)
N: Ratio of bit rate to clock (N = 32, 64, 372, 256)
D: Duty cycle of clock (D = 0 to 1.0)
L: Frame length (L = 10)
F: Absolute value of clock frequency deviation

Assuming values of F = 0, D = 0.5, and N = 372 in the above formula, the reception margin is determined by the formula below.

M = {0.5 – 1/(2 × 372)} × 100 (%) = 49.866 (%)

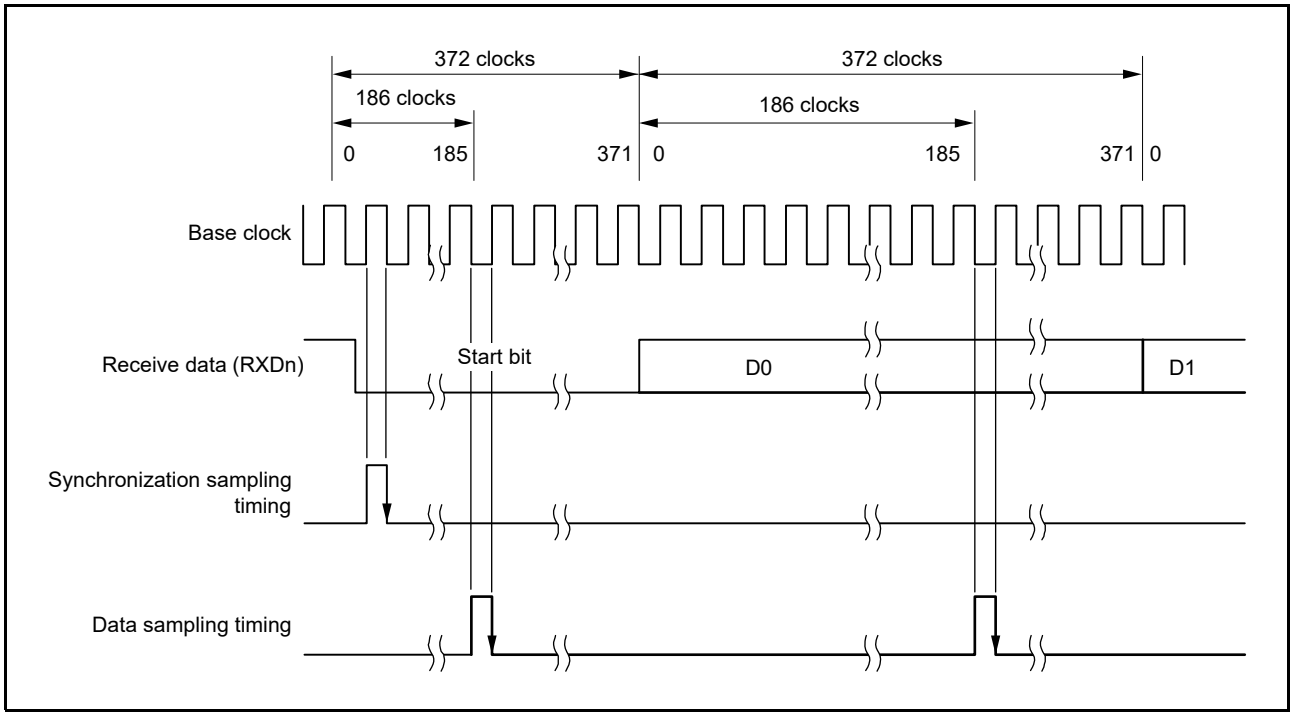

Figure 28.37 Receive Data Sampling Timing in Smart Card Interface Mode (When Clock Frequency is 372 Times the Bit Rate)

28.6.5 SCI Initialization (Smart Card Interface Mode)

Initialize the SCI following the example of flowchart shown in Figure 28.38.
Initialize the SCR and SSR registers before switching from transmit mode to receive mode and vice versa. When not changing the bit rate, it is not necessary to set the CKE[1:0] bits to 00b. Even if the RE bit is set to 0, the RDR register is not initialized.

To change receive mode to transmit mode, first check that reception has completed, and then execute steps [1] and [3] in Figure 28.38. Set TE = 1 and RE = 0 at step [11]. Reception completion can be verified by reading the RXI request, SSR.ORER, or SSR.PER flag.
To change transmit mode to receive mode, first check that transmission has completed, and then execute steps [1] and [3] in Figure 28.38. Set TE = 0 and RE = 1 at step [11]. Transmission completion can be verified by reading the SSR.TEND flag.

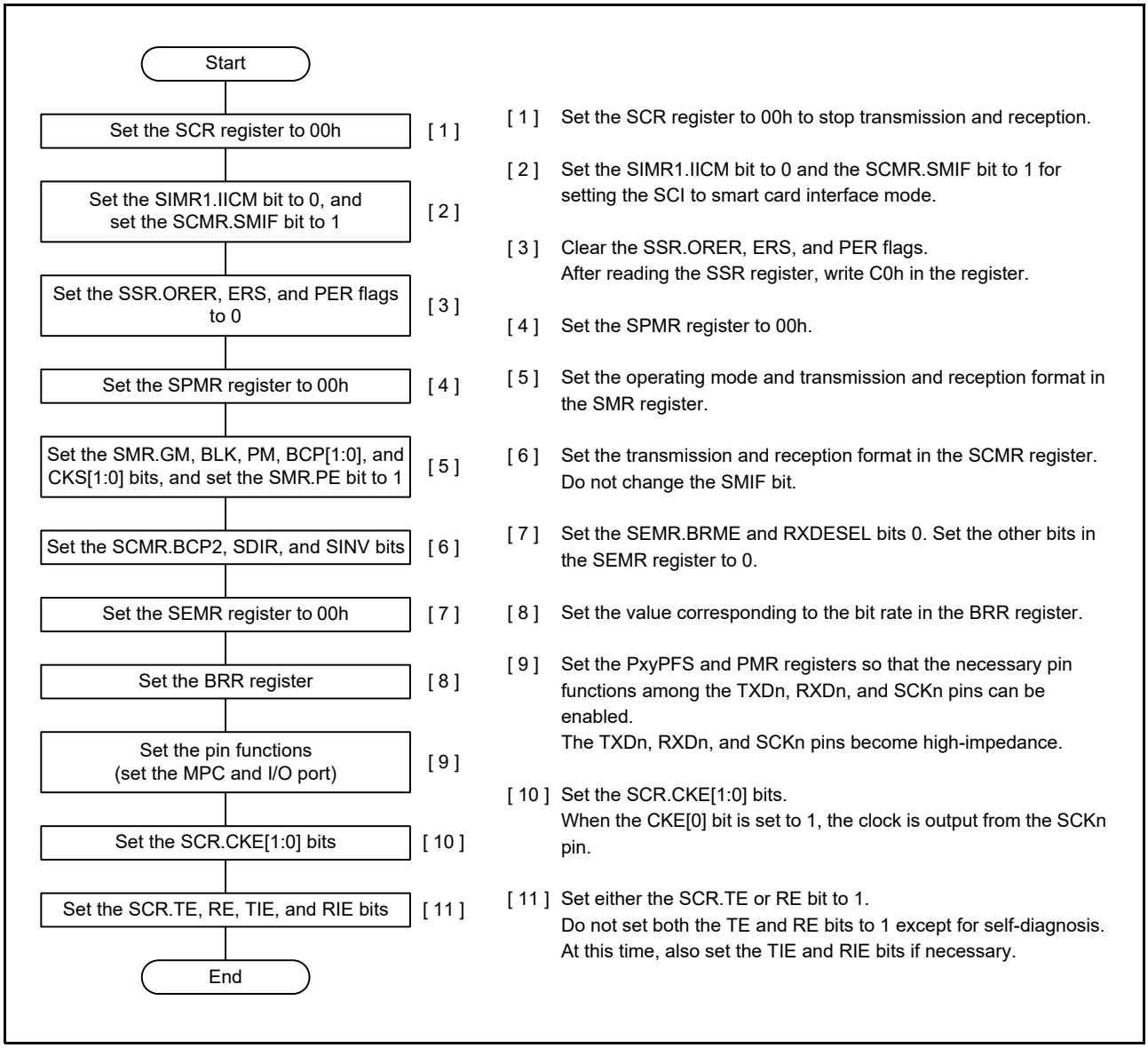

Figure 28.38 Example of SCI Initialization Flowchart (Smart Card Interface Mode)

Figure 28.39 shows an example of data transmission when the SCI is set to smart card interface mode according to the flow described in Figure 28.38 after a reset. When the pin functions are set to the SCK and TXD pins, they are still high-impedance because the SCR.CKE[0] and SCR.TE bits are 0. When the CKE[0] bit is set to 1, clock is output from the SCK pin. When the transmit data is written after setting the TE bit to 1, a data transmission starts. After the TE bit is set to 1, one frame of high-impedance is output from TXD pin (internal wait time) and then the data transmission starts. In smart card interface mode, the clock is continuously output while the CKE[0] bit is set to 1 (clock output) even if both the TE and RE bits are set to 0.

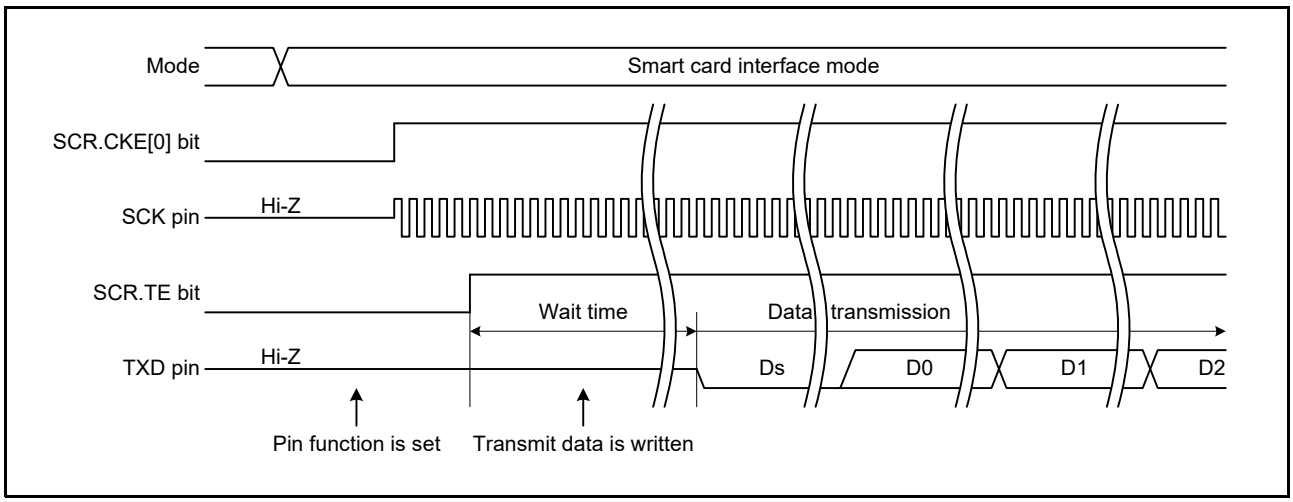

Figure 28.39 Example of Data Transmission Timing in Smart Card Interface Mode

28.6.6 Serial Data Transmission (Except in Block Transfer Mode)

Serial data transmission in smart card interface mode (except in block transfer mode), in that an error signal is sampled and data can be retransmitted, is different from that in non-smart card interface mode. Figure 28.40 shows the data retransmit operation during transmission.

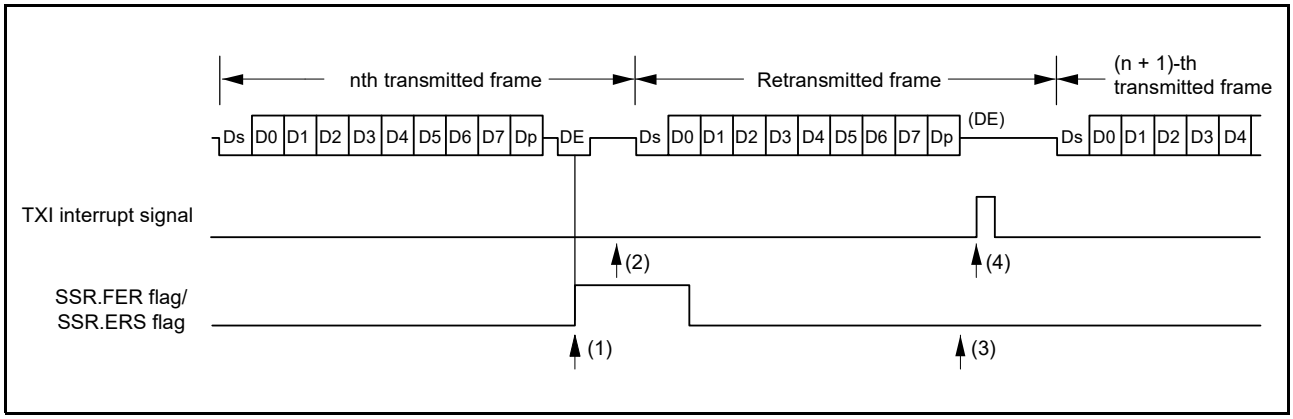

Figure 28.40 Data Retransmit Operation in SCI Transmit Mode

(1) When an error signal from the receiver end is sampled after one-frame data has been transmitted, the SSR.ERS flag is set to 1. If the SCR.RIE bit is 1 at this time, an ERI interrupt request is generated. Clear the ERS flag before the next parity bit is sampled.

(2) For a frame in which an error signal is received, the SSR.TEND flag is not set. Data is retransferred from the TDR register to the TSR register allowing automatic data retransmission.

(3) If no error signal is returned from the receiver, the ERS flag is not set to 1.

(4) In this case, the SCI judges that transmission of one-frame data (including retransmission) has been completed, and the TEND flag is set. If the SCR.TIE bit is 1 at this time, a TXI interrupt request is generated. Writing transmit data to the TDR register starts transmission of the next data.

Figure 28.41 shows a sample flowchart of serial transmission.

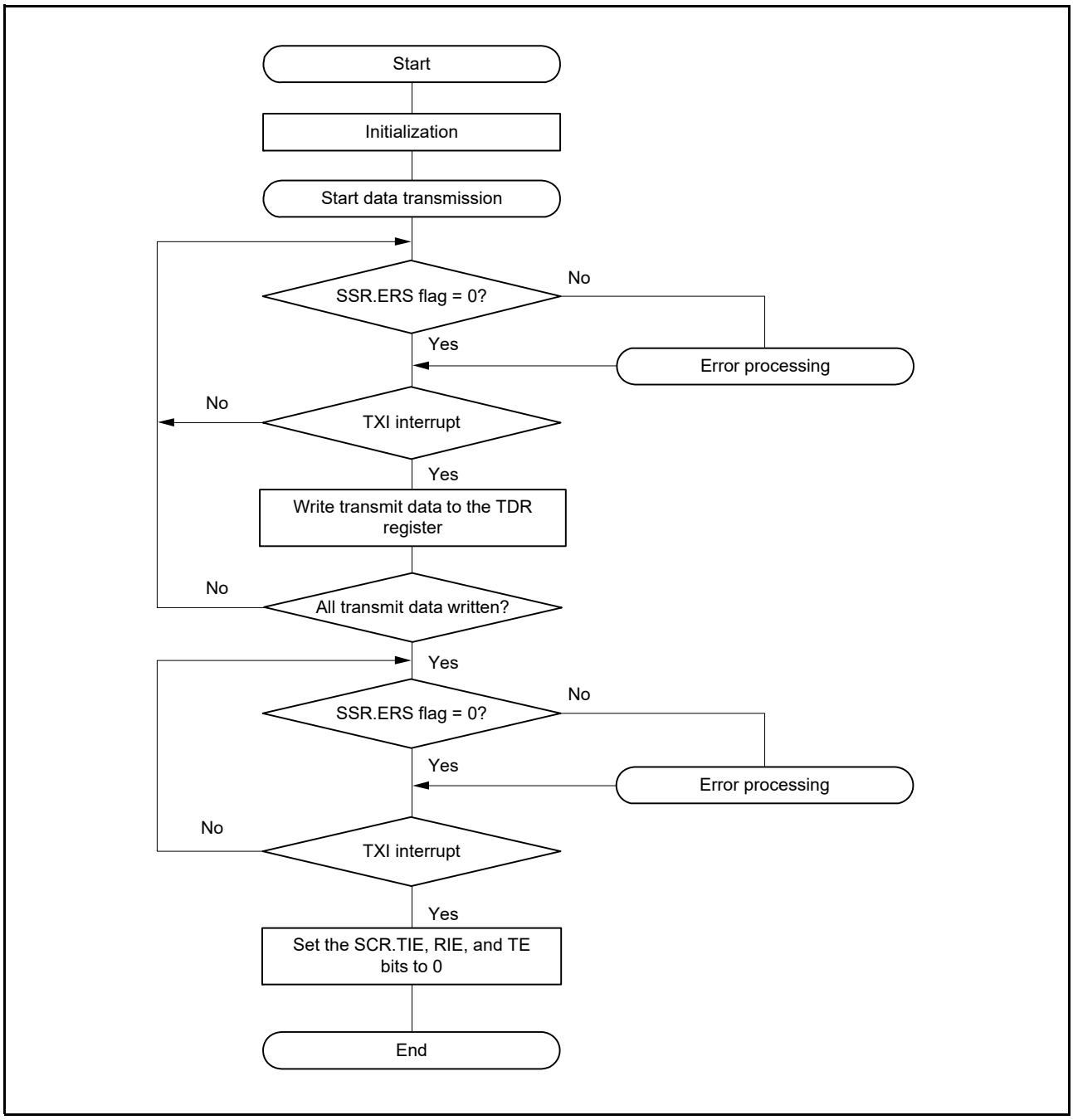

Figure 28.41 Sample Smart Card Interface Transmission Flowchart

All the processing steps are automatically performed using a TXI interrupt request to activate the DTC or DMAC. When the SSR.TEND flag is set to 1 in transmission, if the SCR.TIE bit is 1, a TXI interrupt request is generated. The DTC or DMAC is activated by a TXI interrupt request if the TXI interrupt request is specified as a source of DTC or DMAC activation beforehand, allowing transfer of transmit data. The TEND flag is automatically set to 0 when the DTC or DMAC transfers the data.

If an error occurs, the SCI automatically retransmits the same data. During this retransmission, the TEND flag is kept to 0 and the DTC or DMAC is not activated. Therefore, the SCI and DTC or DMAC automatically transmit the specified number of bytes, including retransmission in the case of error occurrence. However, since the ERS flag is not automatically cleared, set the RIE bit to 1 beforehand to enable an ERI interrupt request to be generated at error occurrence, and clear the ERS flag.

When transmitting/receiving data using the DTC or DMAC, be sure to make settings to enable the DTC or DMAC before making SCI settings.
For DTC or DMAC settings, refer to section 18, Data Transfer Controller (DTCa), section 17, DMA Controller (DMACA).

Note that the SSR.TEND flag is set in different timings depending on the SMR.GM bit setting. Figure 28.42 shows the TEND flag generation timing.

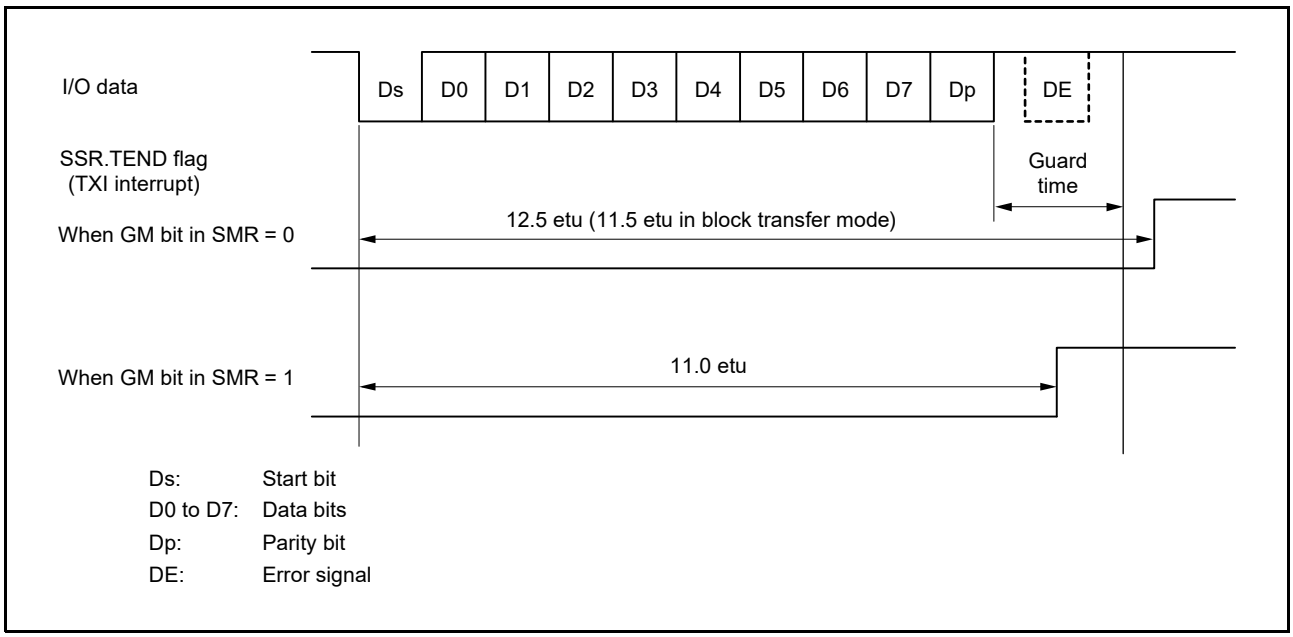

Figure 28.42 SSR.TEND Flag Generation Timing during Transmission

28.6.7 Serial Data Reception (Except in Block Transfer Mode)

Serial data reception in smart card interface mode is similar to that in non-smart card interface mode. Figure 28.43 shows the data retransmit operation in receive mode.

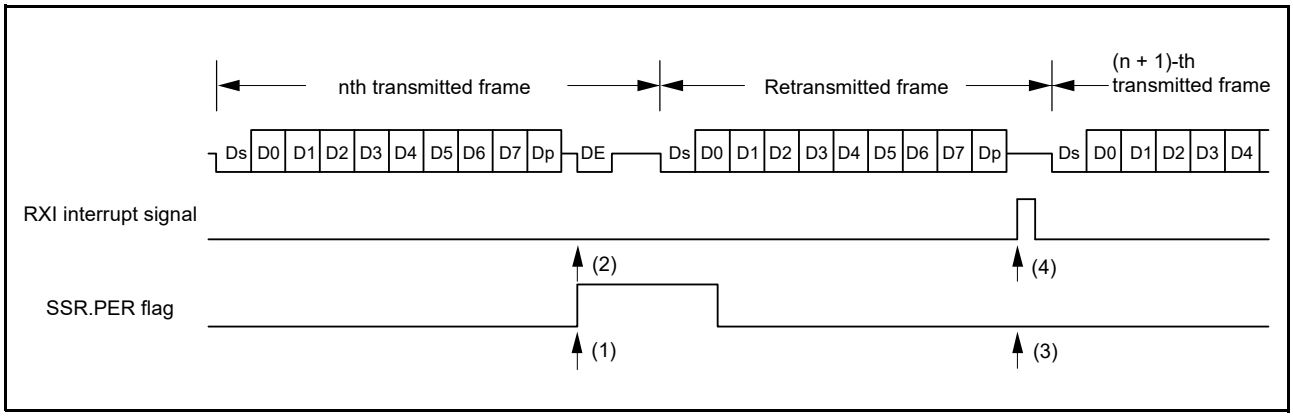

Figure 28.43 Data Retransmit Operation in SCI Receive Mode (Data Retransmit Operation during Reception)

(1) If a parity error is detected in receive data, the SSR.PER flag is set to 1. When the SCR.RIE bit is 1 at this time, an ERI interrupt request is generated. Clear the PER flag before the next parity bit is sampled.
(2) For a frame in which a parity error is detected, no RXI interrupt is generated.
(3) When no parity error is detected, the SSR.PER flag is not set to 1.
(4) In this case, data is determined to have been received successfully. When the SCR.RIE bit is 1, an RXI interrupt request is generated.

Figure 28.44 shows a sample flowchart for serial data reception.

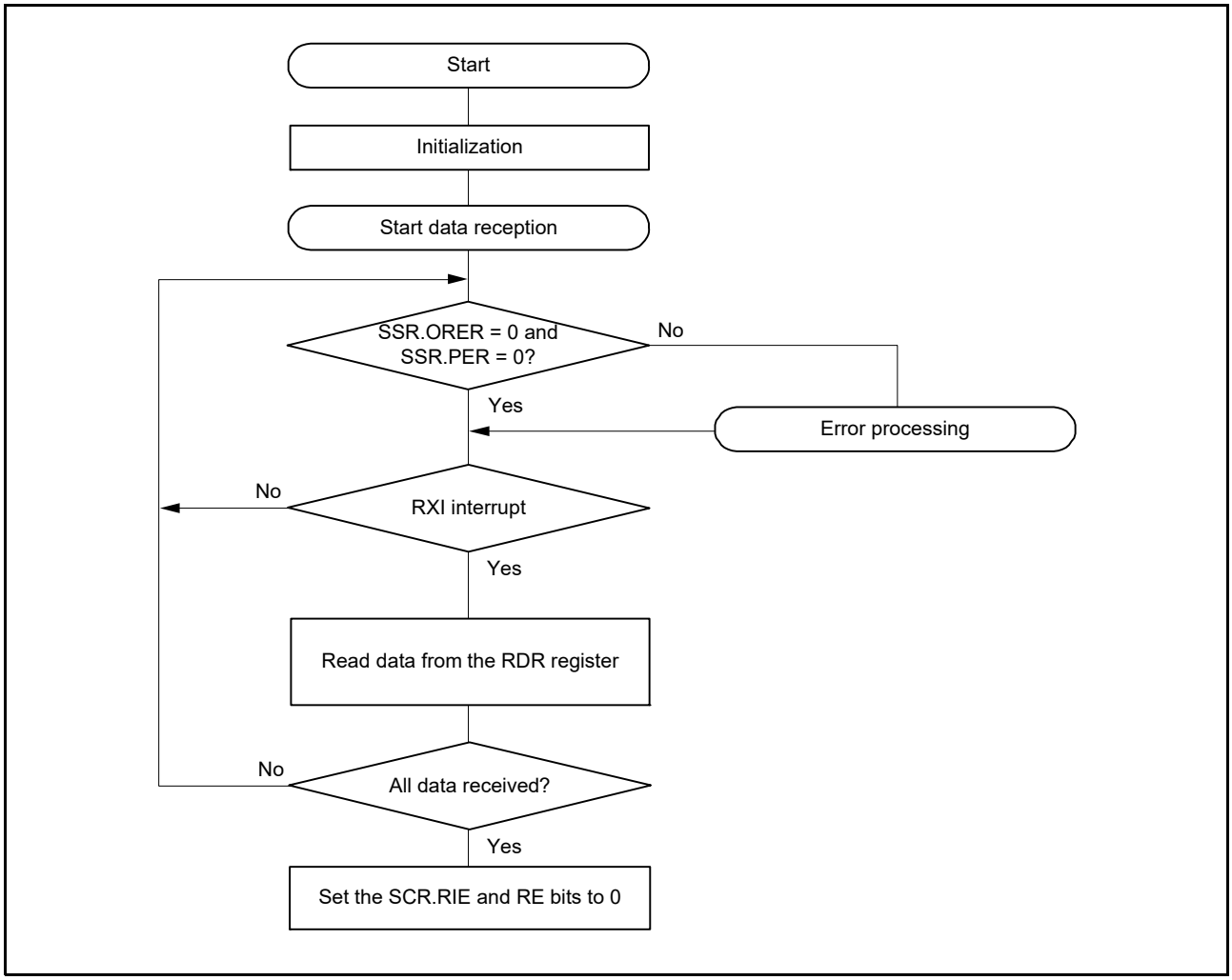

Figure 28.44 Sample Smart Card Interface Reception Flowchart

All the processing steps are automatically performed using an RXI interrupt request to activate the DTC or DMAC.
In reception, setting the RIE bit to 1 allows an RXI interrupt request to be generated. The DTC or DMAC is activated by an RXI interrupt request if the RXI interrupt request is specified as a source of DTC or DMAC activation beforehand, allowing transfer of receive data.
If an error occurs during reception and either the ORER or PER flag in the SSR register is set to 1, a receive error interrupt (ERI) request is generated. Clear the error flag after the error occurrence. If an error occurs, the DTC or DMAC is not activated and receive data is skipped. Therefore, the number of bytes of receive data specified in the DTC or DMAC is transferred.
Even if a parity error occurs and the PER flag is set to 1 during reception, receive data is transferred to the RDR register, thus allowing the data to be read.
When a reception is forcibly terminated by setting the SCR.RE bit to 0 during operation, read the RDR register because the received data which has not yet been read may be left in the RDR register.

Note 1. For operations in block transfer mode, refer to section 28.3, Operation in Asynchronous Mode.

28.6.8 Clock Output Control

Clock output can be fixed to high or low using the SCR.CKE[1:0] bits when the SMR.GM bit is 1. When the CKE[1:0] bits are set to 01b (clock output), the base clock is output from the SCK pin. For the settings of the base clock frequency (bit rate), refer to section 28.2.11, Bit Rate Register (BRR). When the CKE[1:0] bits are set to 00b (output fixed low) or 10b (output fixed to high), the SCK pin can be fixed to low or high.

Figure 28.45 shows a timing chart when the clock output is controlled.

If changing the CKE[1:0] bits while the SMR.GM bit is 0 (non-GSM mode), a pulse of unexpected width may output from SCK pin because the result is immediately reflected to the SCK pin.

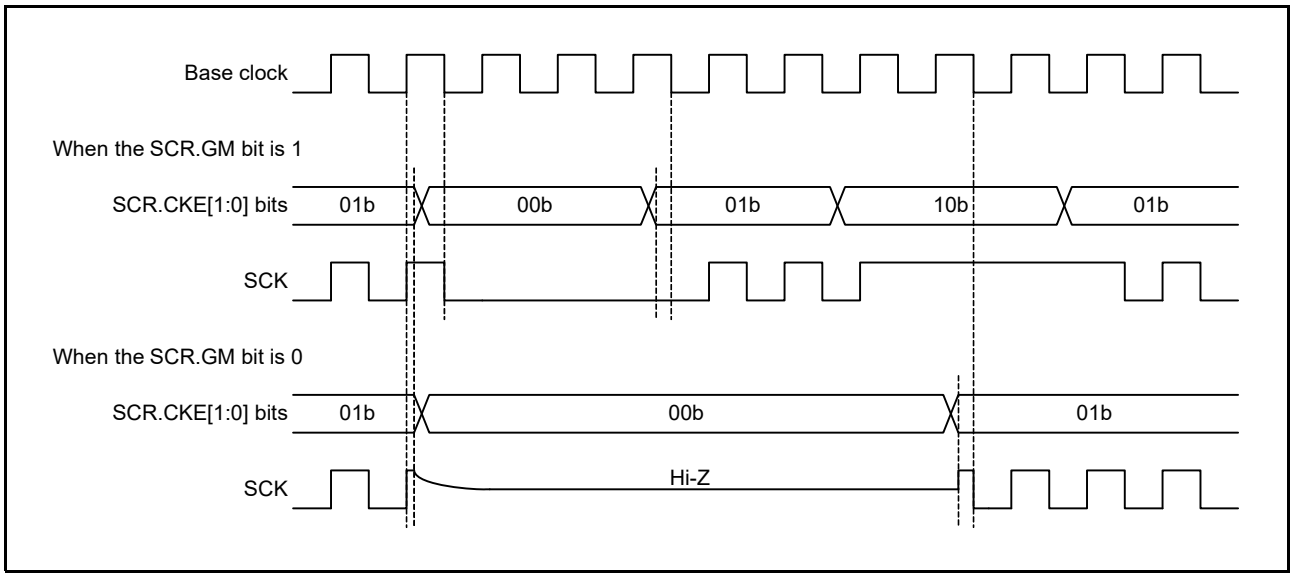

Figure 28.45 Clock Output Control

28.7 Operation in Simple I²C Mode

Simple I²C-bus format is composed of 8 data bits and an acknowledge bit. By continuing into a slave-address frame after a start condition or restart condition, a master device is able to specify a slave device as the partner for communications. The currently specified slave device remains valid until a new slave device is specified or a stop condition is satisfied. The 8 data bits in all frames are transmitted in order from the MSB.

The I²C-bus format and timing of the I²C-bus are shown in Figure 28.46 and Figure 28.47.

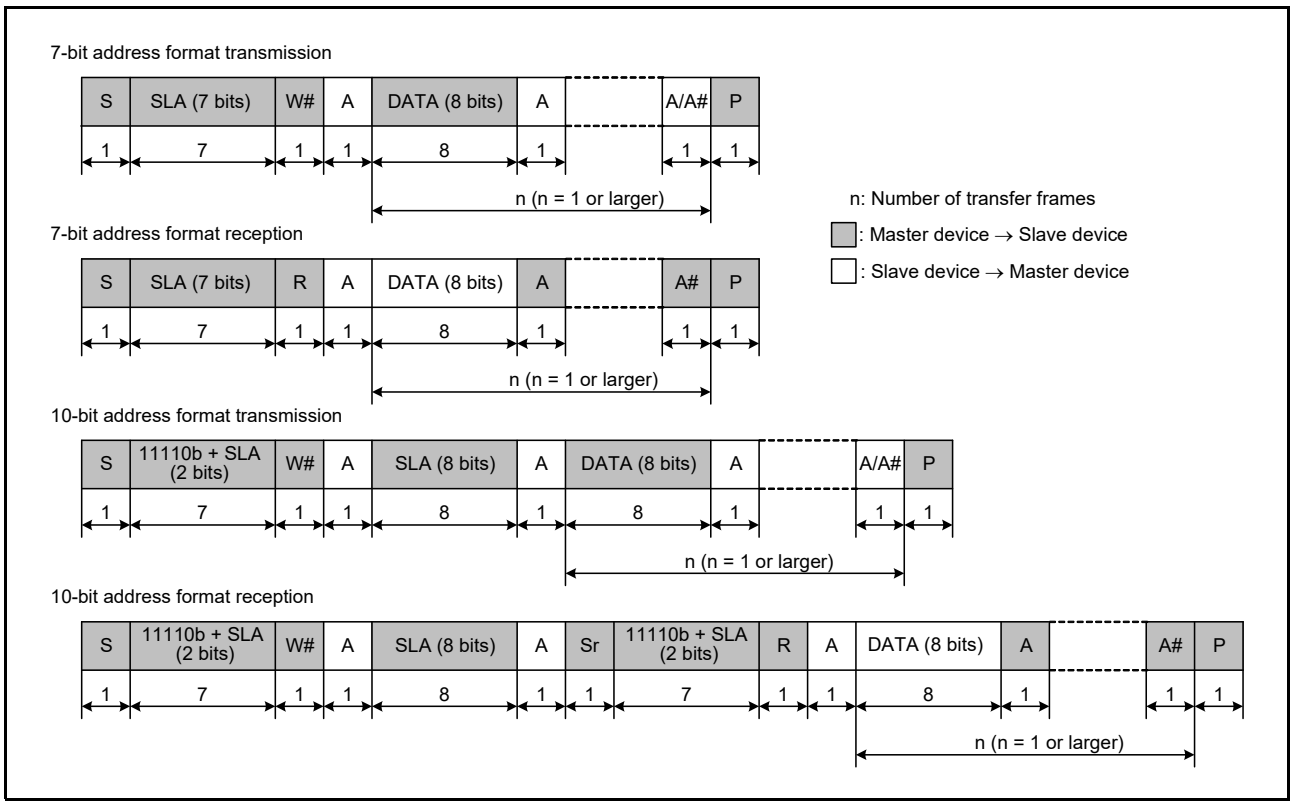

Figure 28.46 I²C-bus Format

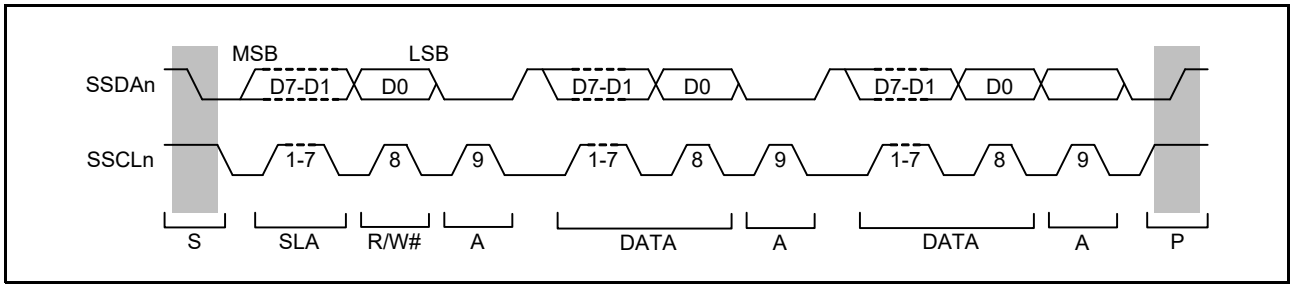

Figure 28.47 I²C-bus Timing (When SLA is 7 Bits)

S: Indicates a start condition, i.e. the master device changing the level on the SSDAn line from the high to the low level while the SSCLn line is at the high level.

SLA: Indicates a slave address, by which the master device selects a slave device.

R/W#: Indicates the direction of transfer (reception or transmission). The value 1 corresponds to transfer from the slave device to the master device and 0 corresponds to transfer from the master device to the slave device.

A/A#: Indicates an acknowledge bit. This is returned by the slave device for master transmission and by the master device for master reception. Return of the low level indicates ACK and return of the high level indicates NACK.

Sr: Indicates a restart condition, i.e. the master device changing the level on the SSDAn line from the high to the low level while the SSCLn line is at the high level and after the setup time has elapsed.

DATA: Indicates the data being received or transmitted.

P: Indicates a stop condition, i.e. the master device changing the level on the SSDAn line from the low to the high level while the SSCLn line is at the high level.

28.7.1 Generation of Start, Restart, and Stop Conditions

Writing 1 to the SIMR3.IICSTAREQ bit causes the generation of a start condition. The generation of a start condition proceeds through the following operations.

- The level on the SSDAn line falls (from the high level to the low level) and the SSCLn line is kept in the released state.
- The hold time for the start condition is secured as half of a bit period at the bit rate determined by the setting of the BRR.
- The level on the SSCLn line falls (from the high level to the low level), the SIMR3.IICSTAREQ bit is set (to 0), and a start-condition generated interrupt is output.

Writing 1 to the SIMR3.IICRSTAREQ bit causes the generation of a start condition. The generation of a start condition proceeds through the following operations.

- The SSDAn line is released and the SSCLn line is kept at the low level.
- The period at low level for the SSCLn line is secured as half of a bit period at the bit rate determined by the setting of the BRR.
- The SSCLn line is released (transition from the low to the high level).
- Once the high level on the SSCLn line is detected, the setup time for the restart condition is secured as half of a bit period at the bit rate determined by the setting of the BRR.
- The level on the SSDAn line falls (from the high level to the low level).
- The hold time for the restart condition is secured as half of a bit period at the bit rate determined by the setting of the BRR.
- The level on the SSCLn line falls (from the high level to the low level), the SIMR3.IICRSTAREQ bit is set (to 0), and a restart-condition generated interrupt is output.

Writing 1 to the SIMR3.IICSTPREQ bit causes the generation of a stop condition. The generation of a stop condition proceeds through the following operations.

- The level on the SSDAn line falls (from the high level to the low level) and the SSCLn line is kept at the low level.
- The period at low level for the SSCLn line is secured as half of a bit period at the bit rate determined by the setting of the BRR.
- The SSCLn line is released (transition from the low to the high level).
- Once the high level on the SSCLn line is detected, the setup time for the stop condition is secured as half of a bit period at the bit rate determined by the setting of the BRR.
- The SSDAn is released (transition from the low to the high level), the SIMR3.IICSTPREQ bit is set (to 0), and a stop-condition generated interrupt is output.

Figure 28.48 shows the timing of operations in the generation of start, restart, and stop conditions.

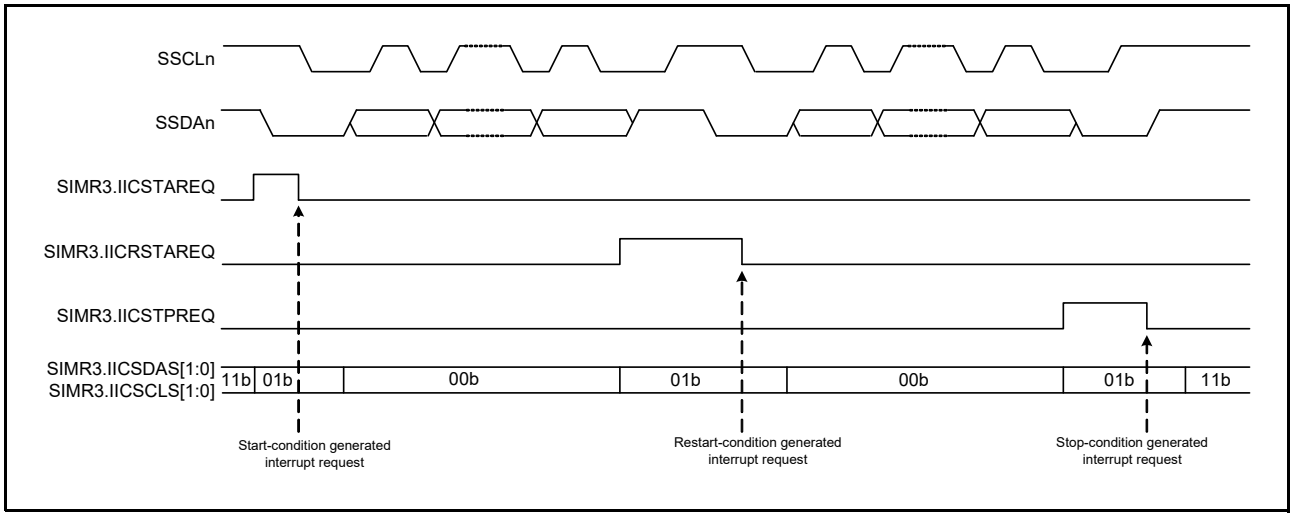

Figure 28.48 Timing of Operations in the Generation of Start, Restart, and Stop Conditions

28.7.2 Clock Synchronization

The SSCLn line may be placed at the low level in the case of a wait inserted by a slave device as the other side of transfer. Setting the SIMR2.IICCSC bit to 1 applies control to obtain synchronization when the levels of the internal SSCLn clock signal and the level being input on the SSCLn pin differ.

When the SIMR2.IICCSC bit is set to 1, the level of the internal SSCLn clock signal changes from low to high, counting to determine the period at high level is stopped while the low level is being input on the SSCLn pin, and counting to determine the period at high level starts after the transition of the input on the SSCLn pin to the high level. The interval from this time until counting to determine the period at high level starts on the transition of the SSCLn pin to the high level is the total of the delay of SSCLn output, delay for noise filtering of the input on the SSCLn pin (2 or 3 cycles of sampling clock for the noise filter), and delay for internal processing (1 or 2 cycles of PCLK). The period at high level of the internal SSCLn clock is extended even if other devices are not placing the low level on the SSCLn line. If the SIMR2.IICCSC bit is 1, synchronization is obtained for the transmission and reception of data by taking the logical AND of the input on the SSCLn pin and the internal SSCLn clock. If the SIMR2.IICCSC bit is 0, synchronization with the internal SSCLn clock is obtained for the transmission and reception of data.

If a slave device inserts a period of waiting into the interval until the transition of the internal SSCLn clock signal from the low to the high level after a request for the generation of a start, restart, or stop condition is issued, the time until generation is prolonged by that period.

If a slave device inserts a period of waiting after the transition of the internal SSCLn clock signal from the low to the high level, although the generation-completed interrupt is issued without stopping the period of waiting, generation of the condition itself is not guaranteed. Figure 28.49 shows an example of operations to synchronize the clocks.

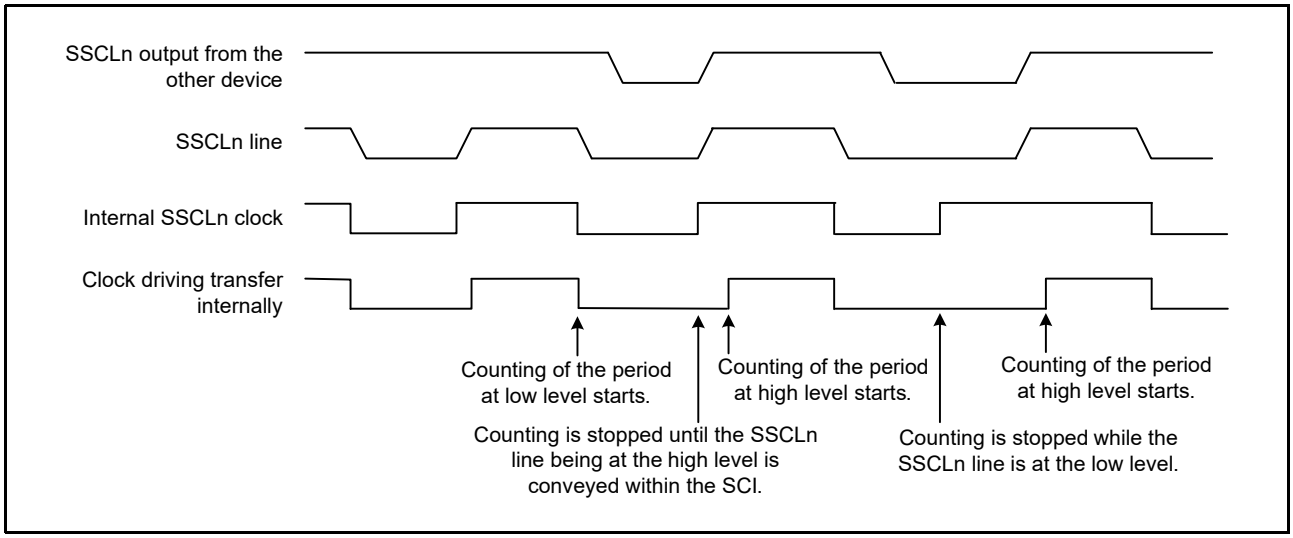

Figure 28.49 Example of Operations for Clock Synchronization

28.7.3 SSDA Output Delay

The SIMR1.IICDL[4:0] bits can be used to set a delay for output on the SSDAn pin relative to falling edges of output on the SSCLn pin. Delay-time settings from 0 to 31 are selectable, representing periods of the corresponding numbers of cycles of the clock signal from the on-chip baud rate generator (derived by frequency-dividing the base clock, PCLK, by the divisor selected by the SMR.CKS[1:0] bits). A delay for output on the SSDAn pin is for the start condition/restart condition/stop condition signal, 8-bit transmit data, and an acknowledge bit.

If the SSDA output delay is shorter than the time for the level on the SSCLn pin to fall, the change of the output on the SSDAn pin will start while the output level on the SSCLn pin is falling, creating a possibility of erroneous operation for slave devices. Ensure that settings for the delay of output on the SSDAn pin are for times greater than the time output on the SSCLn pin takes to fall (300 ns for I^2C-bus in normal mode and fast mode).

Figure 28.50 shows the timing of delays in SSDA output.

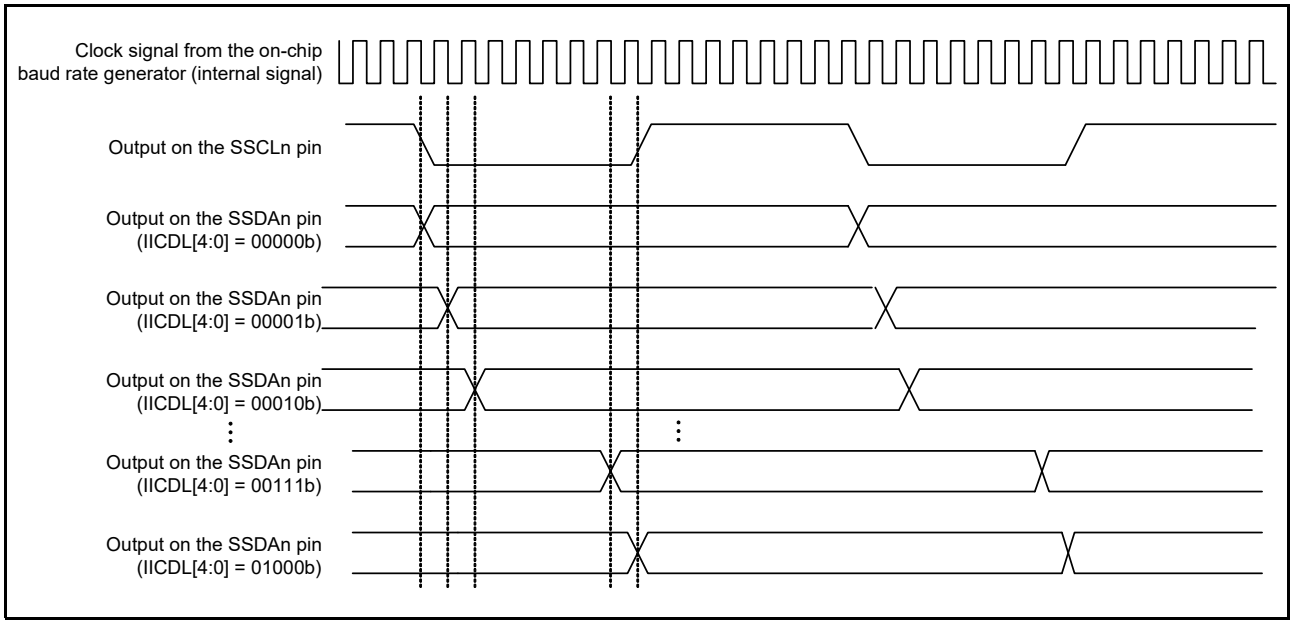

Figure 28.50 Timing of Delays in SSDA Output

28.7.4 SCI Initialization (Simple I2C Mode)

Before transferring data, write the initial value (00h) to the SCR register and initialize the interface following the example shown in Figure 28.51.

When changing the operating mode, transfer format, and so on, be sure to set the SCR register to its initial value before proceeding with the changes.

In simple I2C mode, the open-drain setting for the communication ports should be made on the port side.

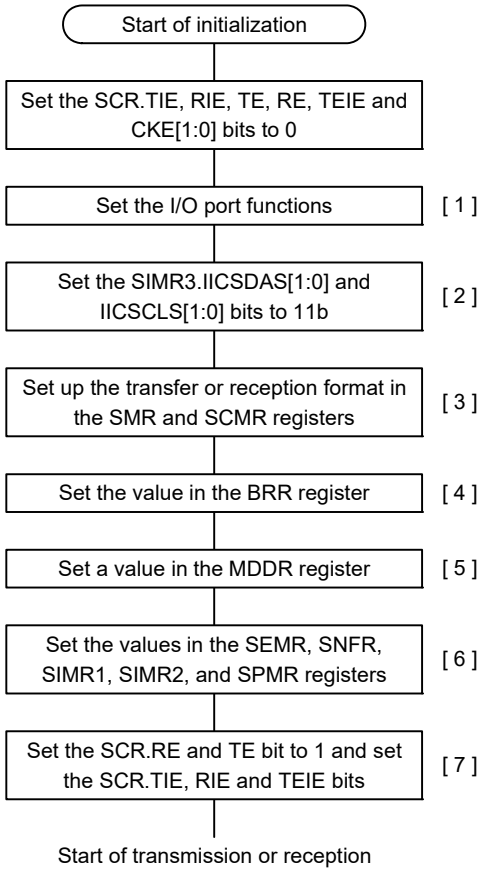

[1] Make I/O port settings that allow use (on N-channel open-drain output pins) of the SSCLn and SSDAn pin functions.

[2] Place the SSCLn and SSDAn pins in the high-impedance state until a start condition is to be generated.

[3] Set the format for transmission and reception in the SMR and SCMR registers.
In the SMR register, set the CKS[1:0] bits to the desired value and set the other bits to 0.
In the SCMR register, set the SDIR bit to 1 and the SINV and SMIF bits to 0.

[4] Write the value for the desired bit rate to the BRR register.

[5] Write the value obtained by correcting a bit rate error in the MDDR register. This step is not necessary if the SEMR.BRME bit is set to 0.

[6] Set the values in the SEMR, SNFR, SIMR1, SIMR2, and SPMR registers.
In the SEMR register, set the NFEN and BRME bits.
In the SNFR register, set the NFCS[2:0] bits.
In the SIMR1 register, set the IICM bit to 1 and the IICDL[4:0] bits as required.
In the SIMR2 register, set the IICACKT and IICCSC bits to 1 and the IICINTM bits as required.
In the SPMR register, set all the bits to 0.

[7] Set the SCR.RE and TE bits to 1. At this time, also set the SCR.TIE, RIE, and TEIE bits (for transmission and when the SIMR2.IICINTM bit is 1, set the RIE bit to 0).
Setting the TE and RE bits to 1 makes the SSCLn and SSDAn pin functions available.

Note: Set the SCR.RE and TE bits to 0 or 1 at the same time.

Figure 28.51 Example of the Flowchart of SCI Initialization (for Simple I2C Mode)

28.7.5 Operation in Master Transmission (Simple I2C Mode)

Figure 28.52 and Figure 28.53 show examples of operations in master transmission and Figure 28.54 is a flowchart showing the procedure for data transmission. Refer to Table 28.33 for more information on the STI interrupt.
When 10-bit slave addresses are in use, steps [3] and [4] in Figure 28.54 are repeated twice.
In simple I2C mode, the transmit data empty interrupt (TXI) is generated when communication of one frame is completed, unlike the TXI interrupt request generation timing during clock synchronous transmission.

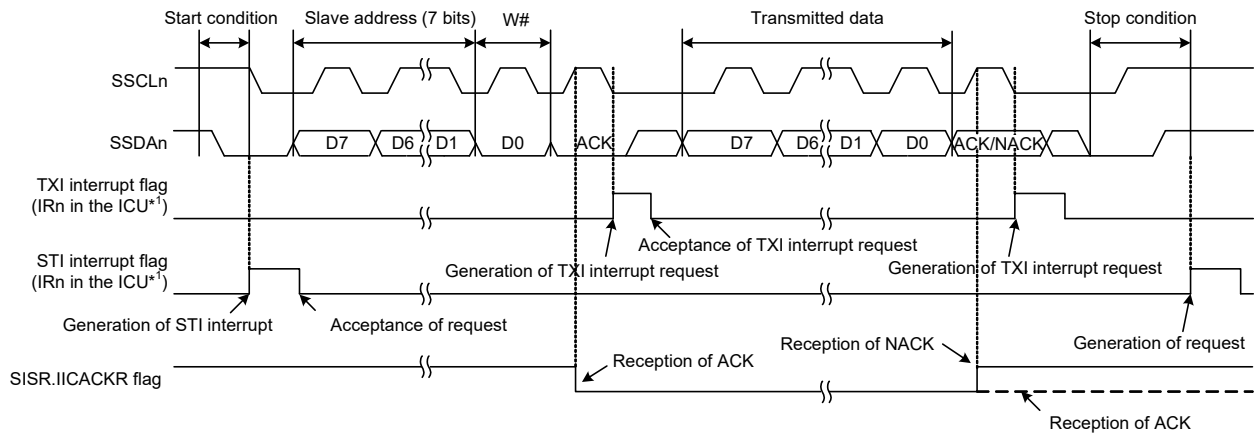

Note1. Refer to section 14, Interrupt Controller (ICUb) for details on the corresponding interrupt vector number.

Figure 28.52 Example 1 of Operations for Master Transmission in Simple I2C-bus Mode (with 7-Bit Slave Addresses, Transmission Interrupts, and Reception Interrupts in Use)

When the SIMR2.IICINTM bit is set to 0 (use ACK/NACK interrupts) during master transmission, the DTC or DMAC is activated by the ACK interrupt as the trigger and necessary number of data bytes are transmitted. When the NACK is received, error processing, such as transmission stop and retransmission, is performed by the NACK interrupt as the trigger.

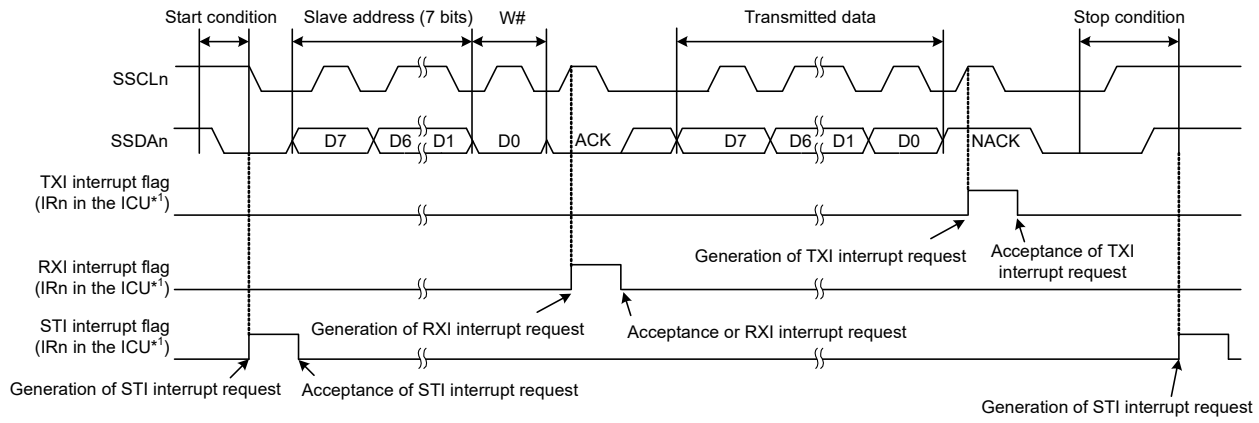

Note1. Refer to section 14, Interrupt Controller (ICUb) for details on the corresponding interrupt vector number.

Figure 28.53 Example 2 of Operations for Master Transmission in Simple I2C-bus Mode (with 7-Bit Slave Addresses, ACK Interrupts, and NACK Interrupts in Use)

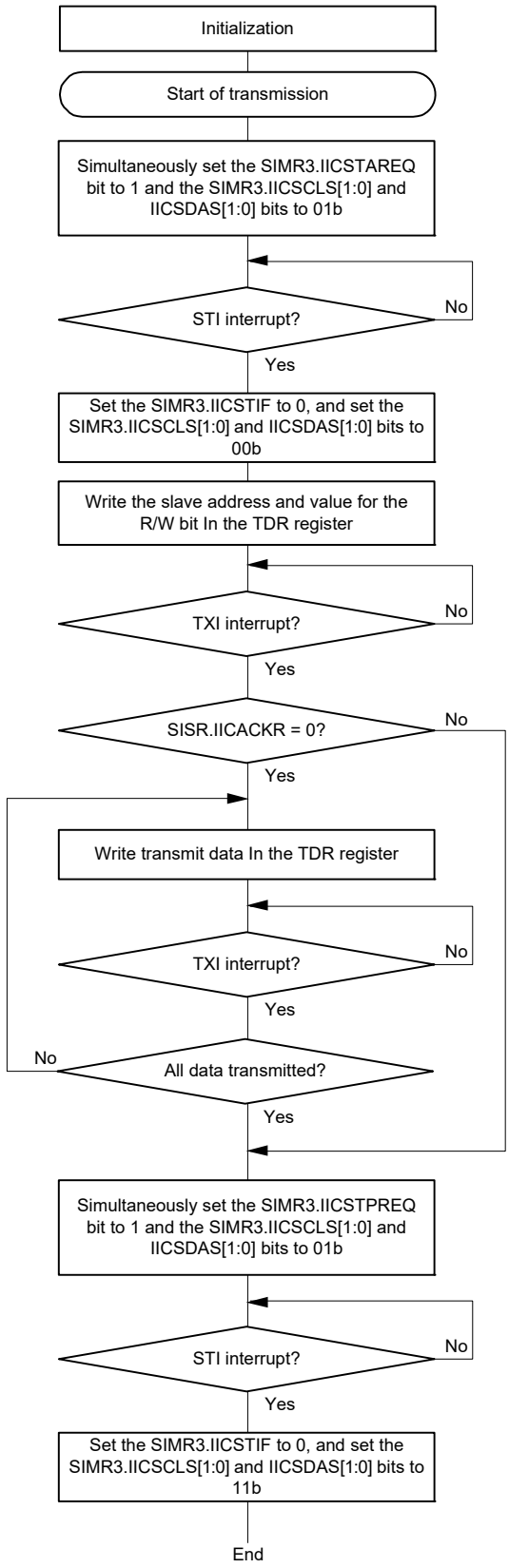

[1] Initialization for simple I²C mode
For transmission, set the SCR.RIE bit to 0 (RXI and ERI interrupts requests are disabled)

[2] Generate a start condition.

[3] Writing to the TDR register:
Writing the slave address and value for the R/W bit to the TDR register.

[4] Confirming ACK response from the slave address:
Check the SISR.IICACKR bit. If its value is 0, it is indicated that the slave device responded with ACK and operations proceed. If its value is 1, it is indicated that there was no response from a slave device so the next transition is to generation of the stop condition.

[5] Steps for continuing with serial transmission:
When transmission is to continue, write further transmit data to the TDR register.
Except for the first data to be transmitted, a TXI request can activate the DMAC or DTC to handle writing of data to the TDR register. In this case, ACK/NACK cannot be confirmed.

[6] Generation of a stop condition.

If 10-bit slave addresses are in use, processing of [3] and [4] is repeated twice.

Note: In simple I²C mode, the TXI interrupt request is generated when communication is completed, unlike the timing during clock synchronous transmission.

Figure 28.54 Example of the Procedure for Master Transmission Operations in Simple I²C Mode (with Transmission Interrupts and Reception Interrupts in Use)

28.7.6 Master Reception (Simple I2C Mode)

Figure 28.55 shows an example of operations in simple I2C mode master reception and Figure 28.56 is a flowchart showing the procedure for master reception.

The value of the SIMR2.IICINTM bit is assumed to be 1 (use reception and transmission interrupts).

In simple I2C mode, the transmit data empty interrupt (TXI) is generated when communication of one frame is completed, unlike the TXI interrupt request generation timing during clock synchronous transmission.

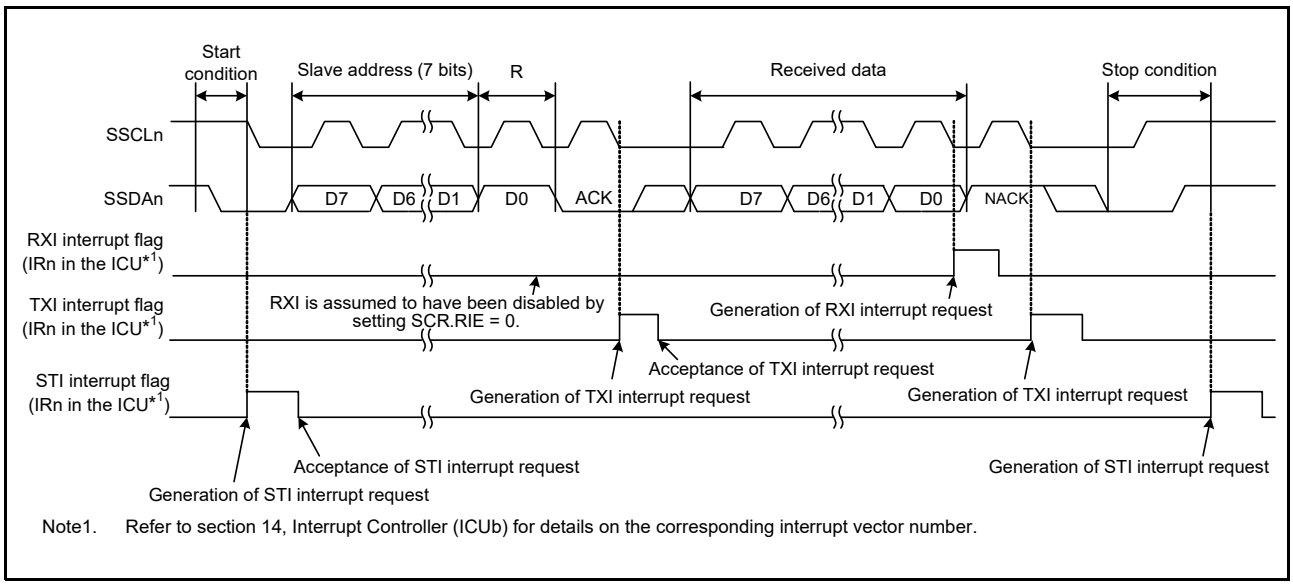

Figure 28.55 Example of Operations for Master Reception in Simple I2C-bus Mode (with 7-Bit Slave Addresses, Transmission Interrupts, and Reception Interrupts in Use)

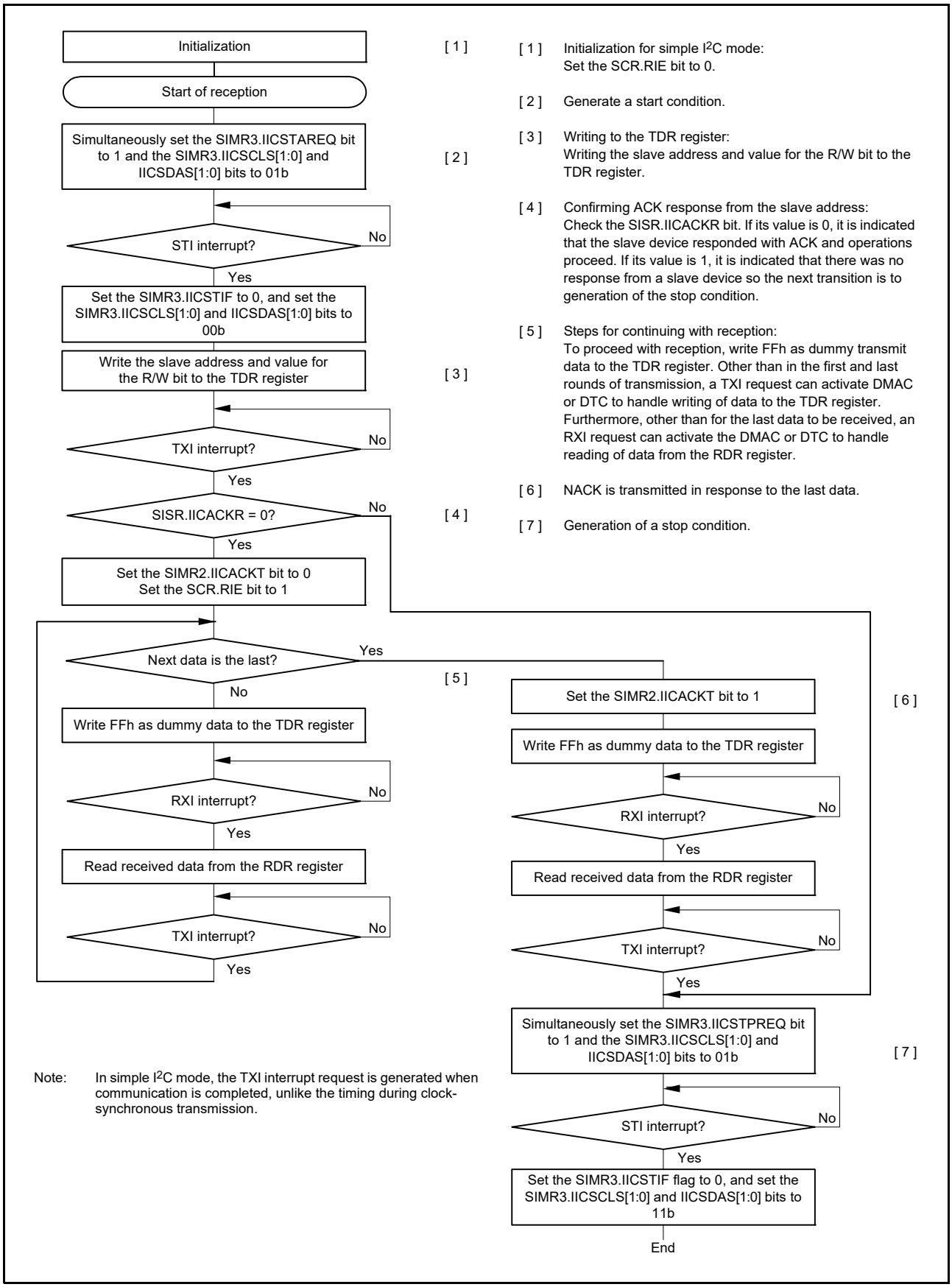

Figure 28.56 Example of the Procedure for Master Reception Operations in Simple I²C Mode (with Transmission Interrupts and Reception Interrupts in Use)

28.7.7 Recovery from Bus Hang-up

If the bus is stuck by an abnormal state in SCI because of the communication error, reset the SCI according to the following steps and release the bus.

(1) Set the SCR.TE and RE bit to 0 at the same time to reset SCI.
(2) Set the SIMR3 register to F0h to release the bus.
(3) If the SSR.RDRF flag is 1, dummy-read the RDR register to clear the flag.
(4) Set the SCR.TE and RE bit to 1 at the same time.

28.8 Operation in Simple SPI Mode

As an extended function, the SCI supports a simple SPI mode that handles transfer among one or multiple master devices and multiple slave devices.

Making the settings for clock synchronous mode (SCMR.SMIF = 0, SIMR1.IICM = 0, SMR.CM = 1) plus setting the SPMR.SSE bit to 1 places the SCI in simple SPI mode. However, the SS pin function on the master side is unnecessary for connection of the device used as the master in simple SPI mode when the configuration only has a single master, so set the SPMR.SSE bit to 0 in such cases.

Figure 28.57 shows an example of connections for simple SPI mode. Control a general port pin to produce the SS output signal from the master.

In simple SPI mode, data are transferred in synchronization with clock pulses in the same way as in clock synchronous mode. One character of data for transfer consists of 8 bits of data, and parity bits cannot be appended to this. The data can be inverted by setting the SCMR.SINV bit to 1.

Since the receiver and transmitter are independent of each other within the SCI module, full-duplex communications are possible, with a common clock signal. Furthermore, since both the transmitter and receiver have a double-buffered structure, writing of further transmit data while transmission is in progress and reading of previously received data while reception is in progress are both possible. Continuous transfer is thus possible.

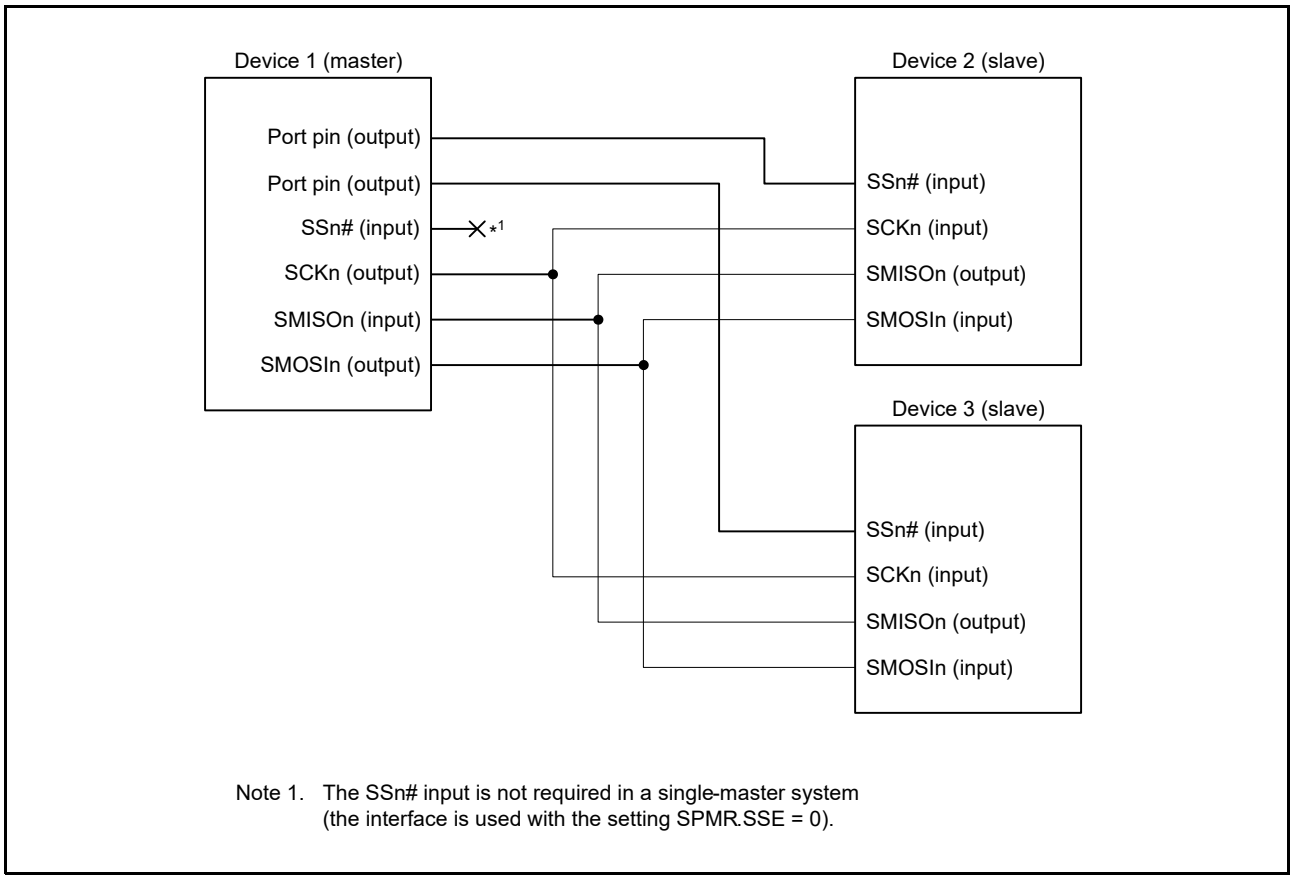

Figure 28.57 Example of Connections via a Simple SPI Mode (In Single Master Mode, SPMR.SSE Bit = 0)

28.8.1 States of Pins in Master and Slave Modes

The direction (input or output) of pins for the simple SPI mode interface differs according to whether the device is a master (SCR.CKE[1:0] = 00b or 01b and SPMR.MSS = 0) or slave (SCR.CKE[1:0] = 10b or 11b and SPMR.MSS = 1). Table 28.29 lists the states of pins according to the mode and the level on the SSn# pin.

Table 28.29 States of Pins by Mode and Input Level on the SSn# Pin

Mode	Input on SSn# Pin	State of SMOSIn Pin	State of SMISOn Pin	State of SCKn Pin
Master mode*1	High level (transfer can proceed)	Output for data transmission*2	Input for received data	Clock output*3
	Low level (transfer cannot proceed)	High-impedance	Input for received data (but disabled)	High-impedance
Slave mode	High level (transfer cannot proceed)	Input for received data (but disabled)	High-impedance	Clock input (but disabled)
	Low level (transfer can proceed)	Input for received data	Output for data transmission	Clock input

Note 1. When there is only a single master (SPMR.SSE = 0), transfer is possible regardless of the input level on the SSn# pin (this is equivalent to input of a high level on the SSn# pin). Since the SSn# pin function is not required, the pin is available for other purposes.
Note 2. The SMOSIn pin output is in the high-impedance state when serial transmission is disabled (SCR.TE bit = 0).
Note 3. The SCKn pin output is in the high-impedance state when serial transmission is disabled (SCR.TE and RE bits = 00b) in a multi-master configuration (SPMR.SSE = 1).

28.8.2 SS Function in Master Mode

Setting the SCR.CKE[1:0] bits to 00b and the SPMR.MSS bit to 0 selects master operation. The SSn# pin is not used in single-master configurations (SPMR.SSE = 0), so transmission or reception can proceed regardless of the value of the SSn# pin.

When the level on the SSn# pin is high in a multi-master configuration (SPMR.SSE = 1), a master device outputs clock signals from the SCKn pin before starting transmission or reception to indicate that there are no other masters or another master is performing reception or transmission. When the level on the SSn# pin is low in a multi-master configuration (SPMR.SSE = 1), there are other masters, and this indicates that transmission or reception is in progress. At this time the SMOSIn output and SCKn pins will be placed in the high-impedance state and starting transmission or reception will not be possible. Furthermore, the value of the SPMR.MFF bit will be 1, indicating a mode fault error. In a multi-master configuration, start error processing by reading SPMR.MFF flag. Also, even if a mode fault error occurs while transmission or reception is in progress, transmission or reception will not be stopped, but the SMOSIn and SCKn pin output will be placed in the high-impedance state after the completion of the transfer.

Control a general port pin to produce the SS output signal from the master.

28.8.3 SS Function in Slave Mode

Setting the SCR.CKE[1:0] bits to 10b and the SPMR.MSS bit to 1 selects slave operation. When the level on the SSn# pin is high, the SMISOn output pin will be in the high-impedance state and clock input through the SCKn pin will be ignored. When the level on the SSn# pin is low, clock input through the SCKn pin will be effective and transmission or reception can proceed.

If the input on the SSn# pin changes from low to high level during transmission or reception, the SMISOn output pin will be placed in the high-impedance state. Meanwhile, the internal processing for transmission or reception will continue at the rate of the clock input through the SCKn pin until processing for the character currently being transmitted or received is completed, after which it stops. At that time, an interrupt (the appropriate one from among TXI, RXI, and TEI) will be generated.

28.8.4 Relationship between Clock and Transmit/Receive Data

The CKPOL and CKPH bits in the SPMR register can be used to set up the clock for use in transmission and reception in four different ways. The relation between the clock signal and the transmission and reception of data is shown in Figure 28.58. The relation is the same for both master and slave operation.

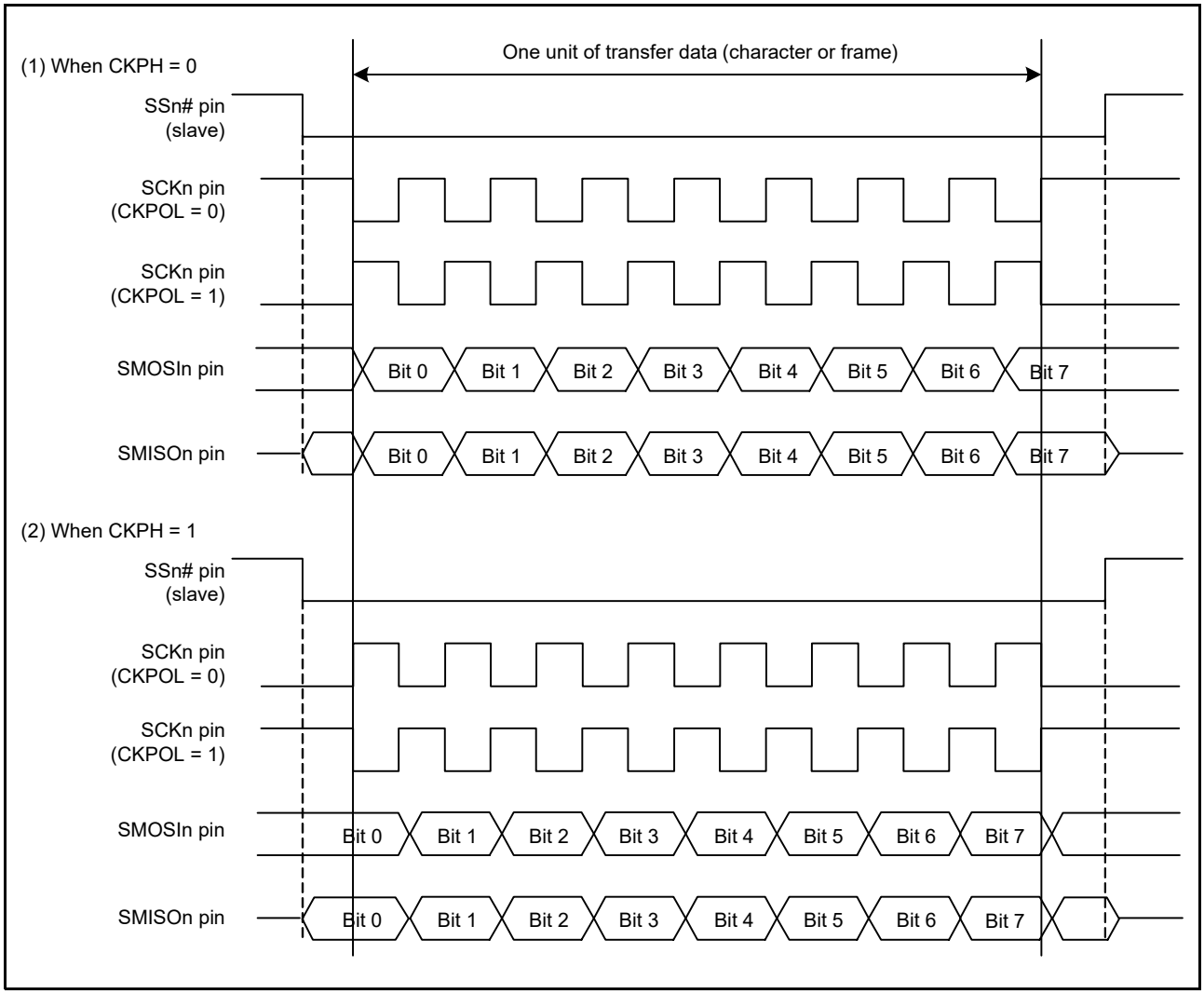

Figure 28.58 Relation between Clock Signal and Transmit/Receive Data in Simple SPI Mode

28.8.5 SCI Initialization (Simple SPI Mode)

The procedure is the same as for initialization in clock synchronous mode Figure 28.24, Sample SCI Initialization Flowchart. The CKPOL and CKPH bits in the SPMR register must be set to ensure that the kind of clock signal they select is suitable for both master and slave devices.
For initialization, changes to the operating mode, changes to the transfer format, and so on, initialize the SCR register before proceeding with changes.
As well as setting the RE bit to 0, note that the SSR.ORER, FER, and PER flags, as well as the RDR register, are not initialized.

28.8.6 Transmission and Reception of Serial Data (Simple SPI Mode)

In master operation, ensure that the SSn# pin of the slave device on the other side of the transfer is at the low level before starting the transfer and at the high level on completion of the transfer. Otherwise, the procedures are the same as in clock synchronous mode.

28.9 Bit Rate Modulation Function

The bit rate modulation function corrects the bit rate by thinning out the specified amount of clocks from those input to the baud rate generator.
When the SEMR.BRME bit is 1, the baud rate generator validates and counts the average interval of the number of clocks set in the MDDR register out of the total 256 clocks input.
Figure 28.59 assumes the SCI is in asynchronous mode, bits SMR.CKS[1:0] are 00b, the BRR register is 00h, and the MDDR register is 160. In this example, the cycle of the base clock is evenly corrected to 256/160, and the bit rate is corrected to 160/256. Note that there is an imbalance in thinning out the internal clock, and expansion and contraction occur in the pulse width of the base clock.

Note: Do not use this function in the highest speed settings (SMR.CKS[1:0] = 00b, SCR.CKE[1] = 0, and BRR = 0) in clock synchronous mode and simple SPI mode.

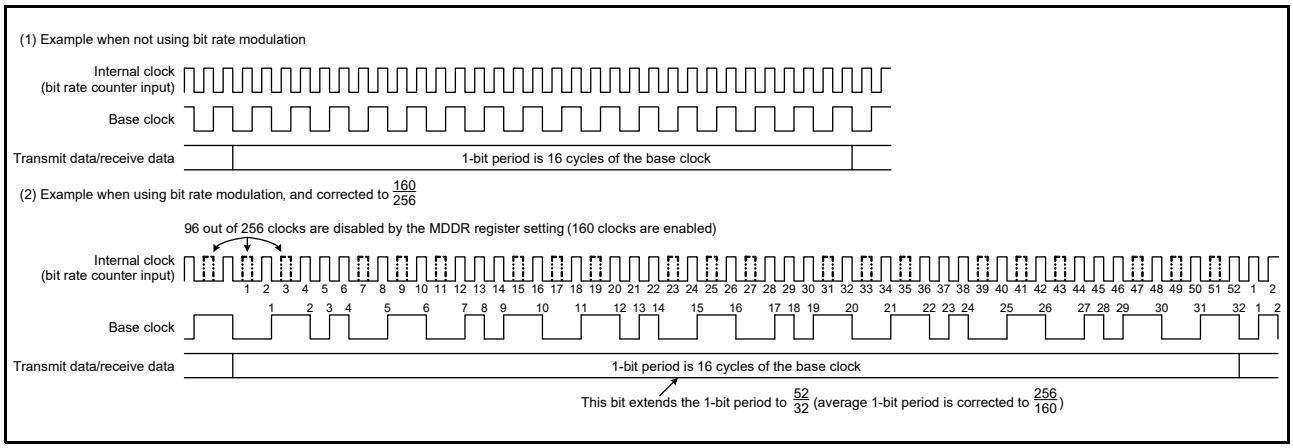

Figure 28.59 Example of the Base Clock When the Bit Rate Modulation Function is Used

The input of a clock signal with a shorter period to the baud rate generator reduces difference in the generated base clock period and, since the division ratio of the baud rate generator also becomes larger, reduces difference in the length of the 1-bit period.

28.10 Extended Serial Mode Control Section: Description of Operation

28.10.1 Serial Transfer Protocol

The extended serial mode control section of the SCI12 can realize the serial transfer protocol composed of Start Frames and Information Frames that is shown in Figure 28.60.

A Start Frame is composed of a Break Field, Control Field 0, and Control Field 1. An Information Frame is composed of a number of Data Fields, a CRC16 Upper Field, and a CRC16 Lower Field.

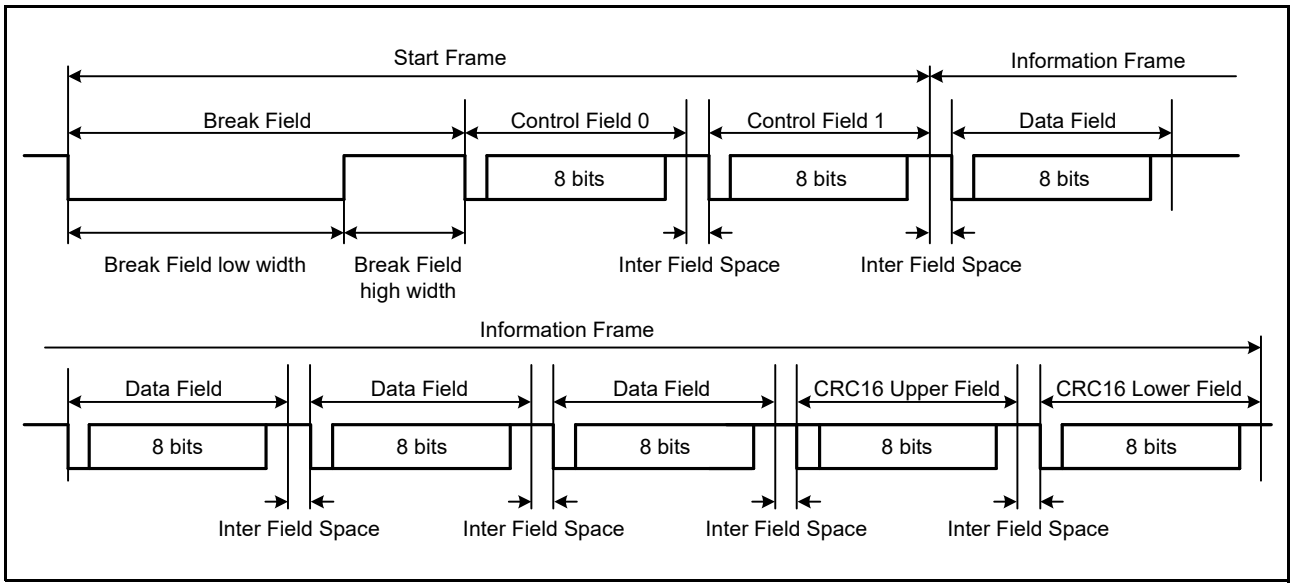

Figure 28.60 Protocol for Serial Transfer by the Extended Serial Mode Control Section

28.10.2 Transmitting a Start Frame

Figure 28.61 shows an example of operations to transmit a Start Frame, which is composed of the Break Field low width, Control Field 0, and Control Field 1. Figure 28.62 and Figure 28.63 are flowcharts for the transmission of a Start Frame.

Operations when the extended serial mode control section is to be used to transmit a Start Frame are as listed below. Be sure to use the SCI12 in asynchronous mode.

(1) With Break Field low width output mode as the operating mode for the timer, writing 1 to the TCR.TCST bit starts counting by the timer, and the low level will be output from the TXDX12 pin over the period corresponding to registers TCNT and TPRE settings.
(2) The output on the TXDX12 pin is inverted when the timer counter underflows, and the STR.BFDF flag is set to 1. An SCIX0 interrupt is also generated if the value of the ICR.BFDIE bit is 1.
(3) Write 0 to the TCR.TCST bit to stop counting by the timer, and send the data for Control Field 0. After the Break Field low width output, stop counting before the next underflow occurs.
(4) When the data for Control Field 0 have been transmitted, the data for Control Field 1 is transmitted.
(5) When the data for Control Field 1 have been transmitted, an Information Frame is transmitted.

Omit the Break Field and Control Field 0 to suit the structure of the Start Frame.

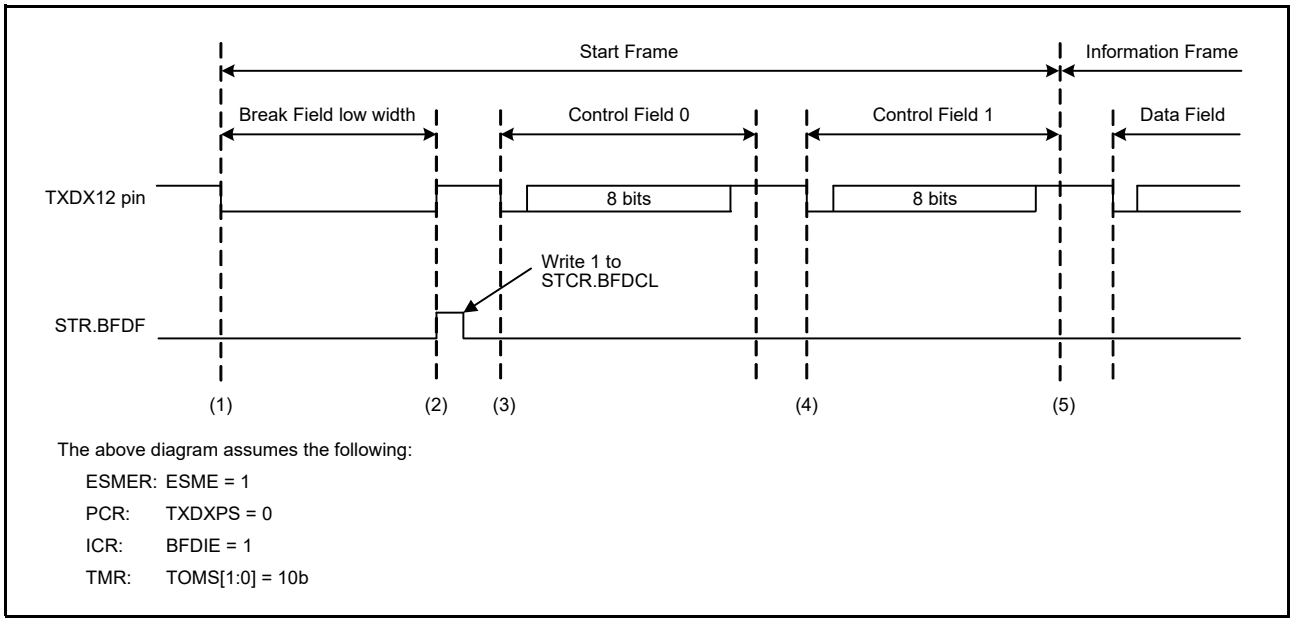

Figure 28.61 Example of Operations When Transmitting a Start Frame

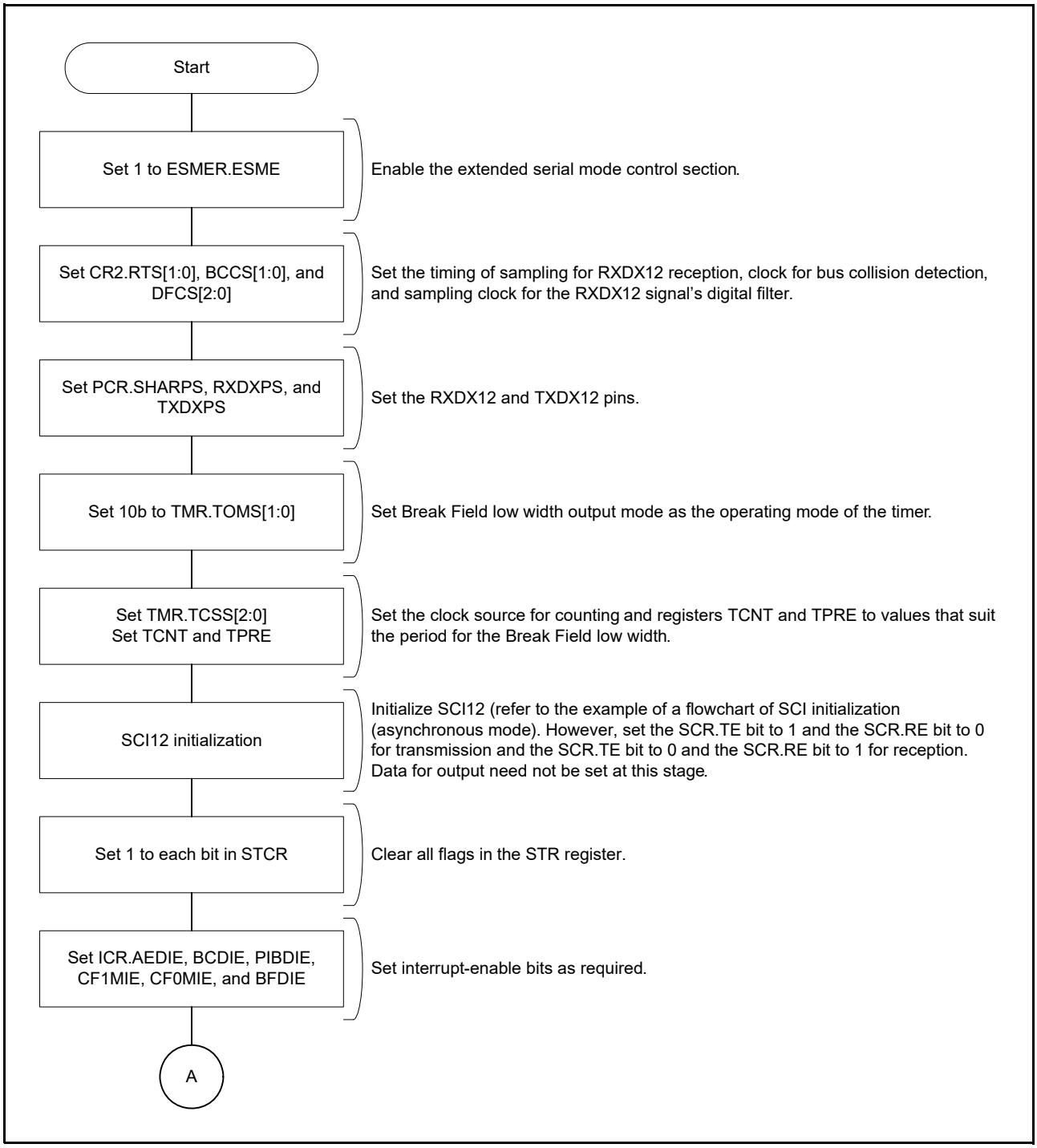

Figure 28.62 Example of Start Frame Transmission (1/2)

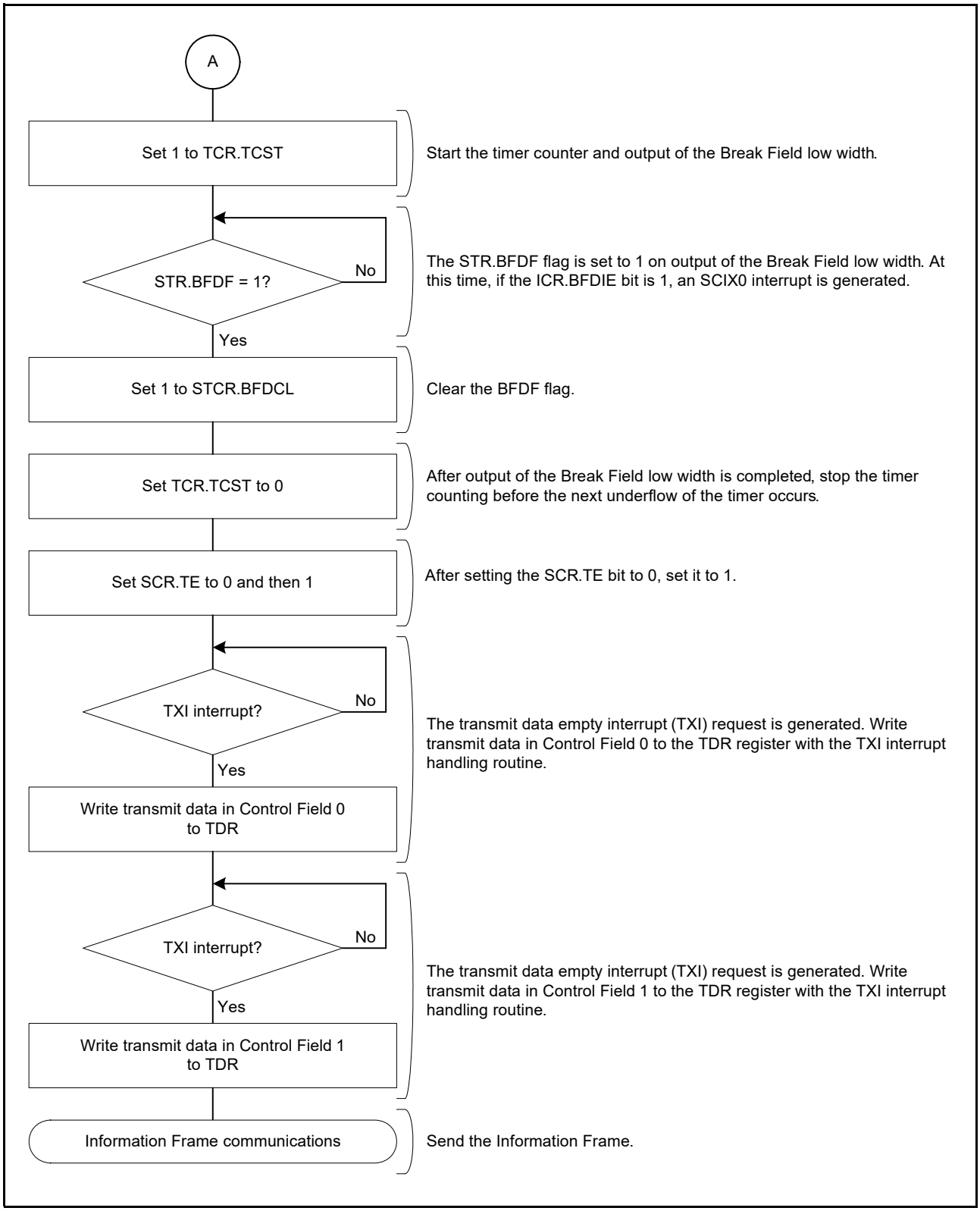

Figure 28.63 Example of Start Frame Transmission (2/2)

28.10.3 Receiving a Start Frame

The extended serial mode control section is capable of receiving Start Frames with the structures listed in Table 28.30.

Table 28.30 Structures of Start Frames

Bit Setting		Structures of Start Frames
BFE	CF0RE	
0	0	Control Field 1 (8 bits) → Information Frame
0	1	Control Field 0 (8 bits) → Control Field 1 (8 bits) → Information Frame
1	0	Break Field (low width) → Control Field 1 (8 bits) → Information Frame
1	1	Break Field (low width) → Control Field 0 (8 bits) → Control Field 1 (8 bits) → Information Frame

Figure 28.64 shows an example of operations to receive a Start Frame, which is composed of the Break Field low width, Control Field 0, and Control Field 1. Figure 28.65 and Figure 28.66 are flowcharts for the reception of a Start Frame, and Figure 28.67 is a state transition diagram when receiving a Start Frame.
Operations when the extended serial mode control section is to be used to receive a Start Frame are as listed below. Be sure to use the SCI12 in asynchronous mode.

(1) With Break Field low width detection mode as the operating mode for the timer, writing 1 to the CR3.SDST bit enables detection of the Break Field low width.
(2) Low-level input on the RXDX12 pin continuing over a period longer than that corresponding to the settings of registers TCNT and TPRE is detected as the Break Field low width. At this time, the STR.BFDF flag is set to 1. An SCIX0 interrupt is also generated if the value of the ICR.BFDIE bit is 1.
(3) When the input from the RXDX12 pin goes high after the Break Field low width, the CR0.RXDSF flag becomes 0 and reception of Control Field 0 starts.
(4) If the data received in Control Field 0 match the data set in the CF0DR register, the STR.CF0MF flag is set to 1. An SCIX1 interrupt is also generated if the value of the ICR.CF0MIE bit is 1. Reception of Control Field 1 starts after that. If the data received in Control Field 0 do not match the data set in the CF0DR register, a transition to the state prior to Break Field low width detection proceeds.
(5) If the data received in Control Field 1 match the data set in registers PCF1DR and SCF1DR, the STR.CF1MF flag is set to 1. An SCIX1 interrupt is also generated if the value of the ICR.CF1MIE bit is 1. Transfer of the Information Frame starts after that. If the data received in Control Field 1 do not match the data set in either or both of registers PCF1DR and SCF1DR, a transition to the state prior to Break Field low width detection proceeds.

Omit the Break Field and Control Field 0 to suit the structure of the Start Frame.

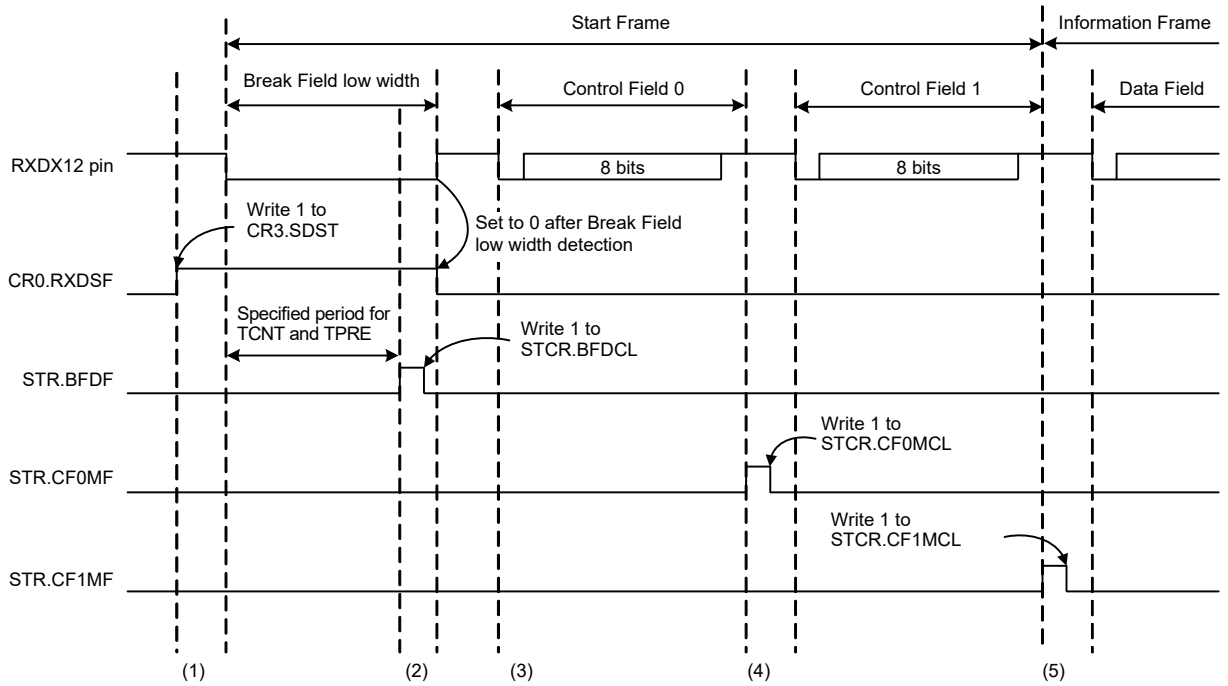

The above diagram assumes the following:

ESMER: ESME = 1

CR1: BFE = 1, CF0RE = 1, CF1DS[1:0] = 10b

PCR: RXDXPS = 0

ICR: BFDIE = 1, CF0MIE = 1, CF1MIE = 1

TMR: TOMS[1:0] = 01b

Figure 28.64 Example of Operations at the Time of Start Frame Reception

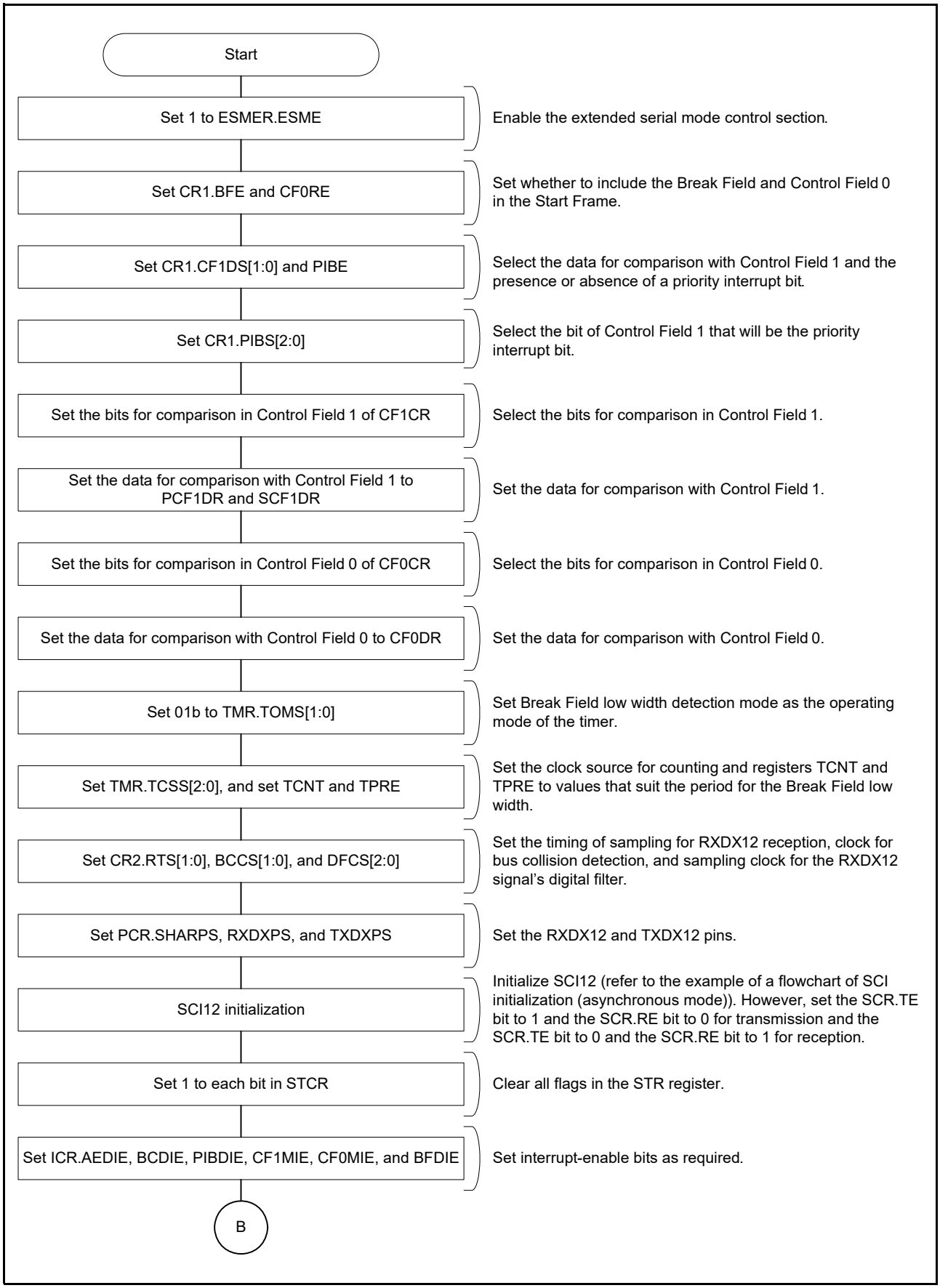

Figure 28.65 Sample Flowchart for Reception of a Start Frame (1)

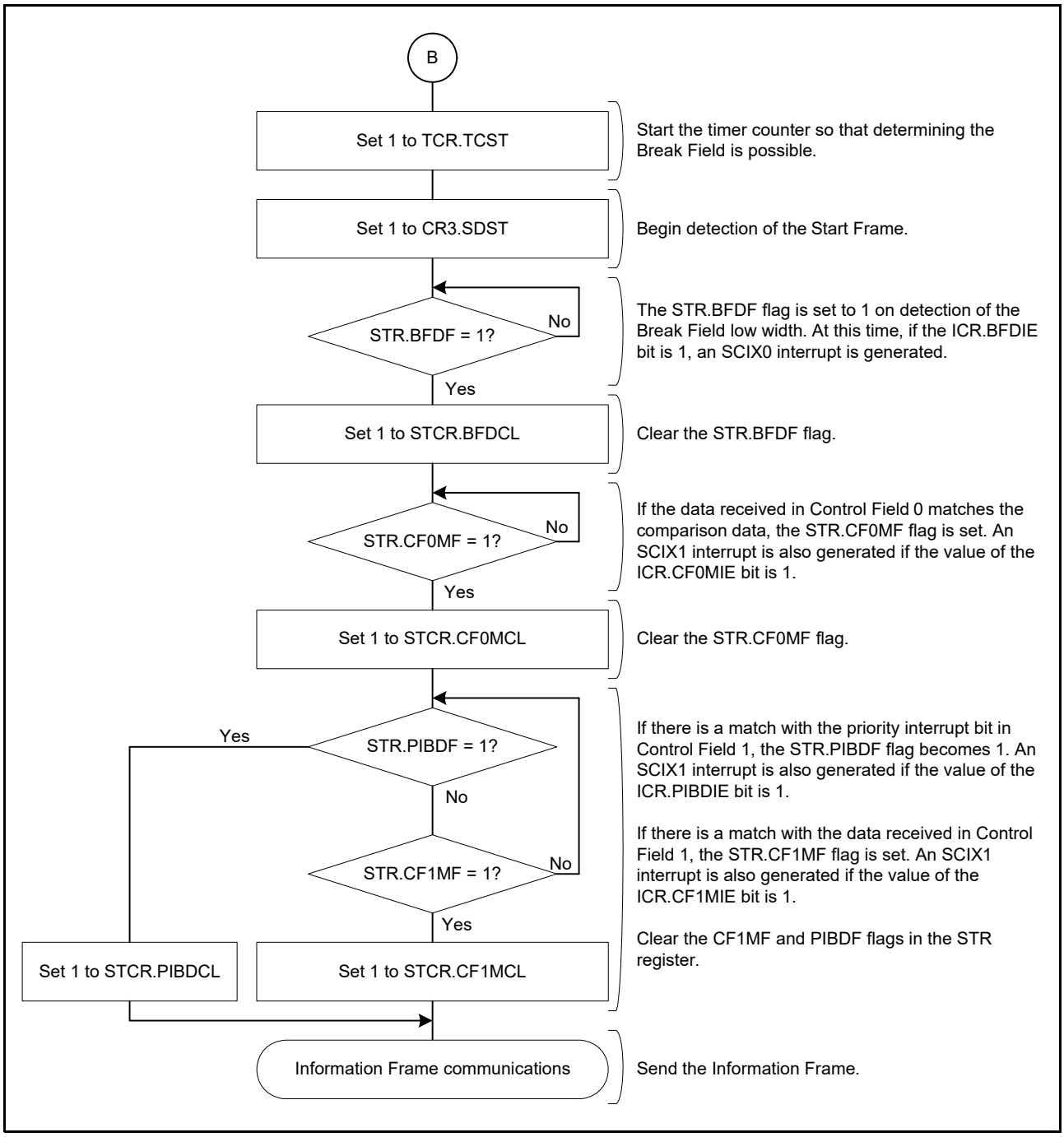

Figure 28.66 Sample Flowchart for Reception of a Start Frame (2)

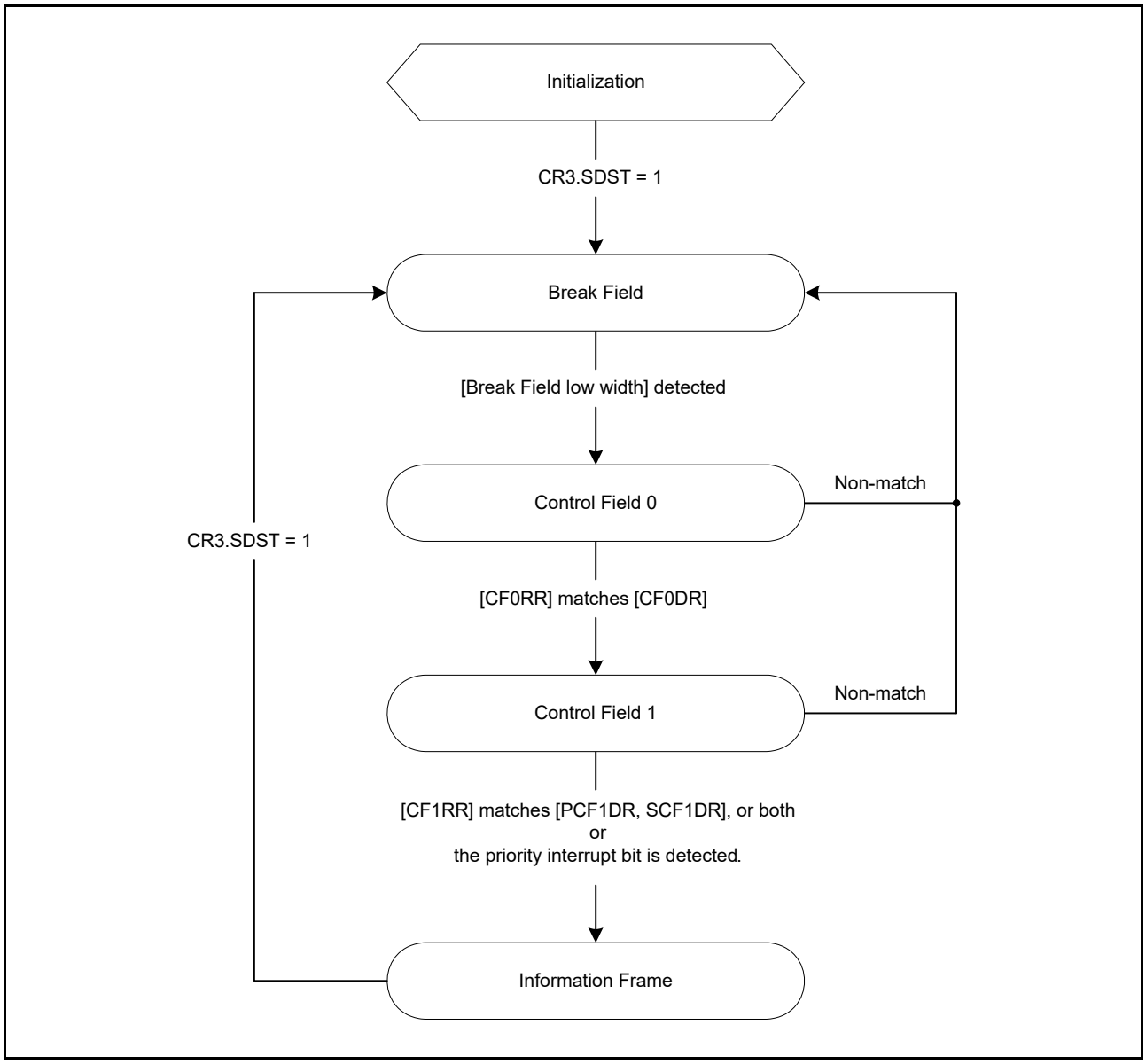

Figure 28.67 State Transitions When Receiving a Start Frame

28.10.3.1 Priority Interrupt Bit

Figure 28.68 shows an example of operation in Start Frame reception where a priority interrupt bit is in use. Setting the CR1.PIBE bit to 1 enables the use of a priority interrupt bit.
Operations of the extended serial mode control section in start Frame reception where a priority interrupt bit is in use are as described below.

Steps (1) to (4) are the same as in Figure 28.64, for Start Frame reception.

(5) If the value of the bit selected by the CR1.PIBS[2:0] bits matches the corresponding bit in the PCF1DR register, the STR.PIBDF flag is set to 1. An SCIX1 interrupt is also generated if the value of the ICR.PIBDIE bit is 1. Transfer of the Information Frame starts after that. If the data received in Control Field 1 do not match the data set in either or both of registers PCF1DR and SCF1DR and the priority interrupt bit is not detected, a transition to the state prior to Break Field low width detection proceeds.

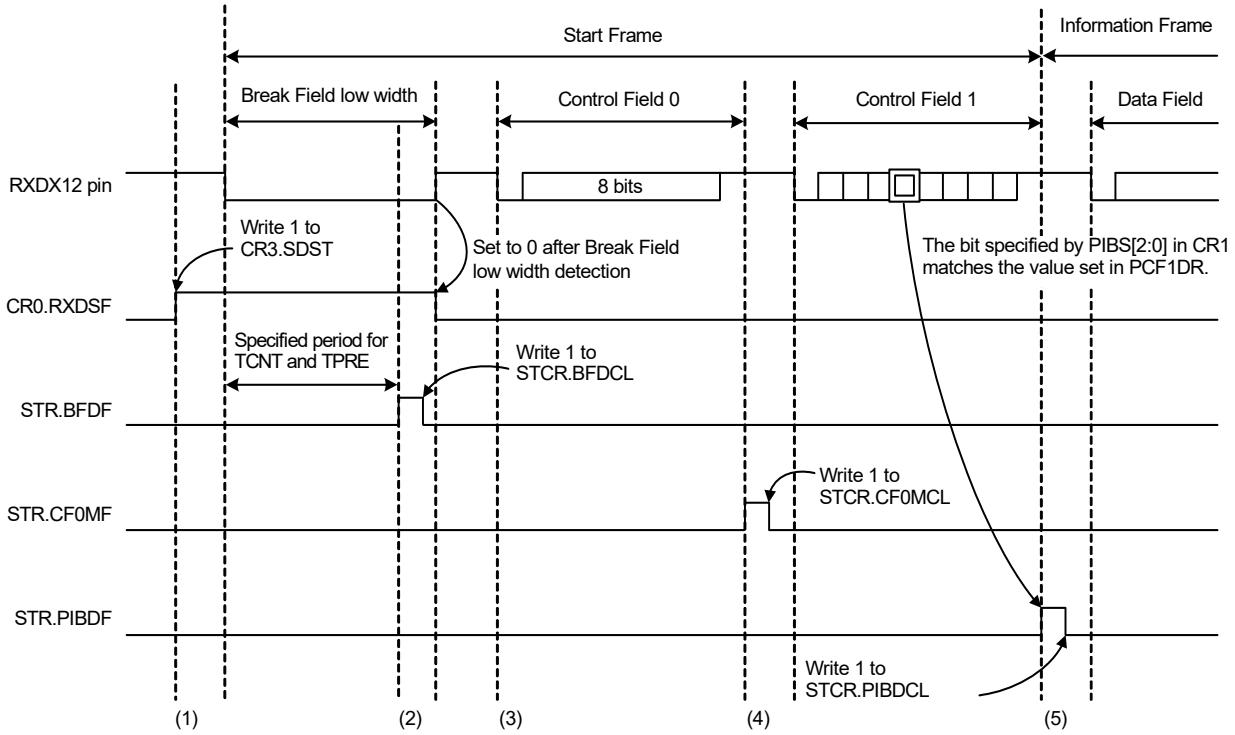

The above diagram assumes the following:

ESMER: ESME = 1

CR1: BFE = 1, PIBE = 1, CF0RE = 0, CF1DS[1:0] = 10b, PIBS[2:0] = 011b

PCR: RXDXPS = 0

ICR: BFDIE = 1, CF0MIE = 1, PIBDIE = 1

TMR: TOMS[1:0] = 01b

Figure 28.68 Example of Operations When Receiving a Start Frame While the CR1.PIBE Bit is 1

28.10.4 Detection of Bus Collisions

Detection of bus collisions operate for cases where output of the Break Field low width and transmission of data are in progress when the ESMER.ESME bit and the SCR.TE bit are set to 1.

Figure 28.69 shows an example of operations with bus collision detection. Signals output through TXDX12 and input through RXDX12 are sampled with the bus collision detection clock set with the CR2.BCCS[1:0] bits as the sampling clock, and the STR.BCDF flag is set to 1 if the signals fail to match three times in a row. An SCIX2 interrupt is also generated if the value of the ICR.BCDIE bit is 1.

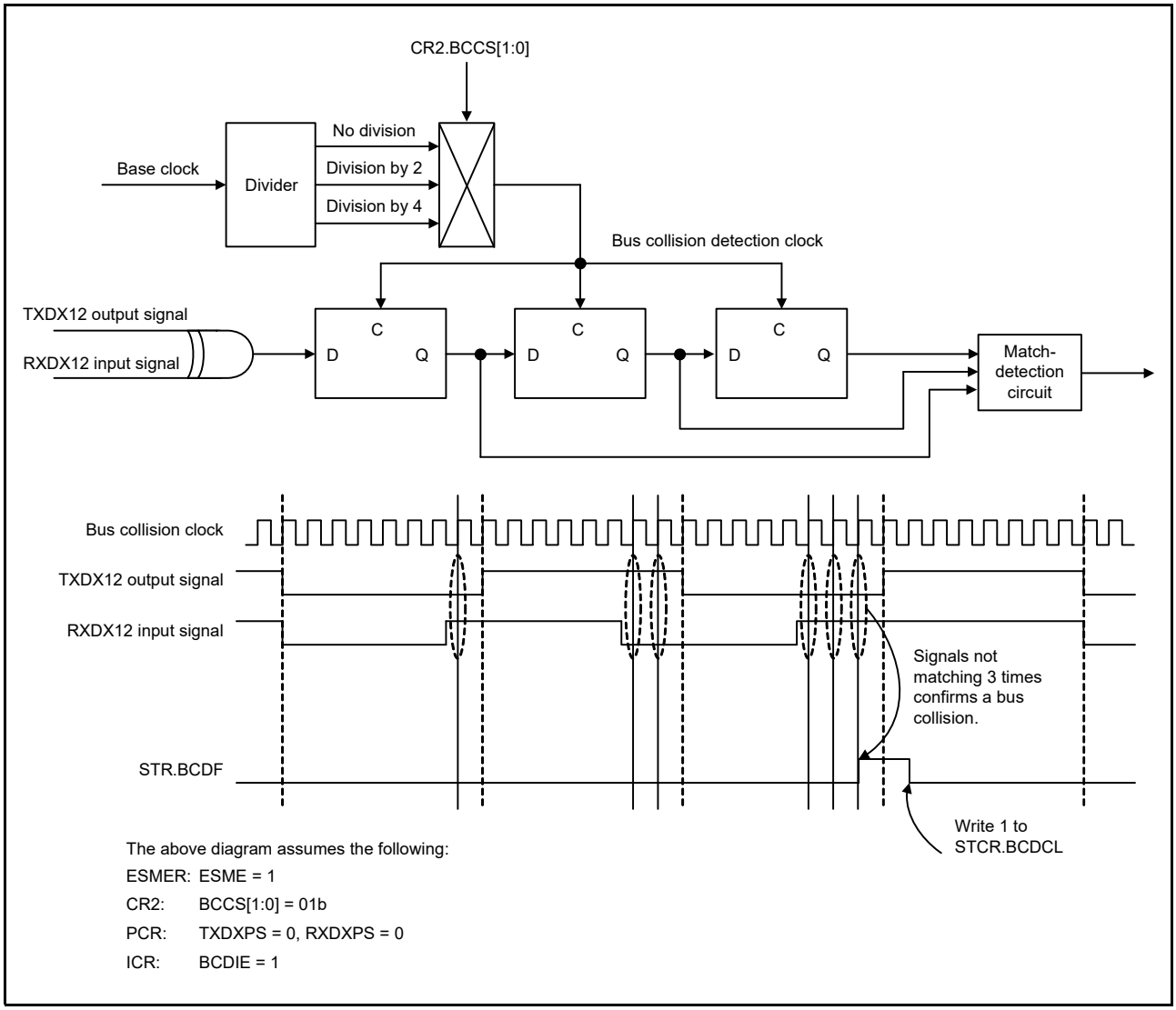

Figure 28.69 Example of Operations with Bus Collision Detection

28.10.5 Digital Filter for Input on the RXDX12 Pin

Signals input through the RXDX12 pin can be passed through a digital filter before they are conveyed to the internal circuits. The digital filter consists of three flip-flop circuit stages connected in series and a match-detecting circuit. The CR2.DFCS[2:0] bits select the sampling clock for the RXDX12 pin input signals. If the outputs of all three latches match, the given level is conveyed to subsequent circuits. If the levels do not match, the previous value is retained. In other words, levels are confirmed as being the signal if they are retained for at least three cycles of the sampling clock but judged to be noise rather than changes in the signal level if they change within three cycles of the sampling clock. Figure 28.70 shows an example of operations with the digital filter.

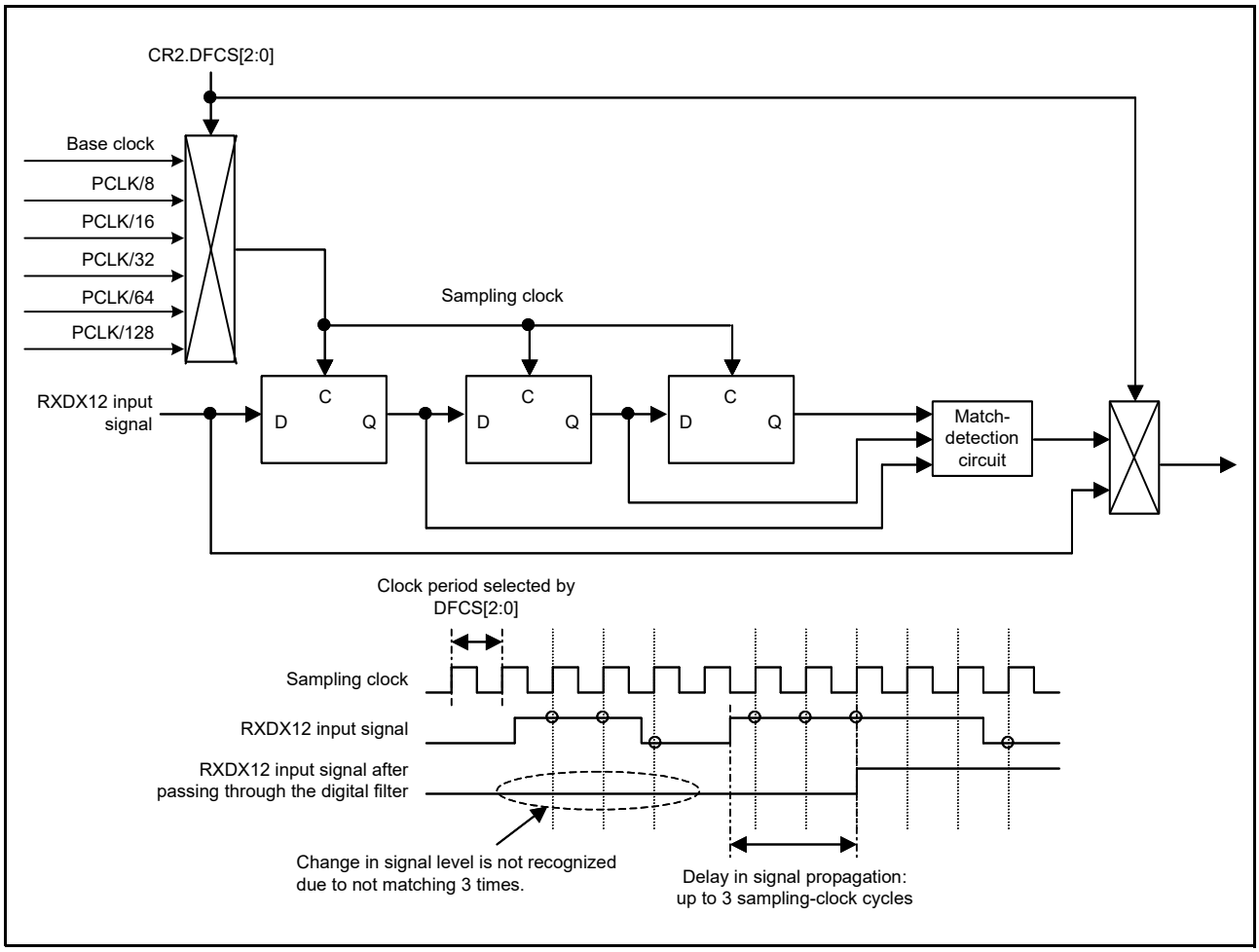

Figure 28.70 Example of Operations with the Digital Filter

28.10.6 Bit Rate Measurement

The bit rate measurement function measures the intervals between rising and falling edges and between falling and rising edges of the signal input from the RXDX12 pin. Figure 28.71 shows an example of operations for bit rate measurement.

(1) Writing 1 to the CR0.BRME bit enables bit rate measurement. Only set the BRME bit to 1 when you wish to proceed with bit rate measurement. Furthermore, bit rate measurement will not proceed during a Break Field, even if the BRME bit is set to 1.

(2) After detection of the Break Field low width, bit rate measurement starts when the level input on the RXDX12 pin becomes high.

(3) Once bit rate measurement has started, counter values from the timer are retained in the read buffers on the input of valid edges from the RXDX12 pin (rising and falling edges) and the counter is reloaded. An SCIX3 interrupt is also generated if the value of the ICR.AEDIE bit is 1. Retention by registers TCNT and TPRE is released by reading these registers.

(4) The bit rate as calculated from the values counted during intervals between valid edges can be used for adjusting the rate by changing the settings of the BRR register. To disable the bit rate measurement after a match with Control Field 1, write 0 to the CR0.BRME bit.

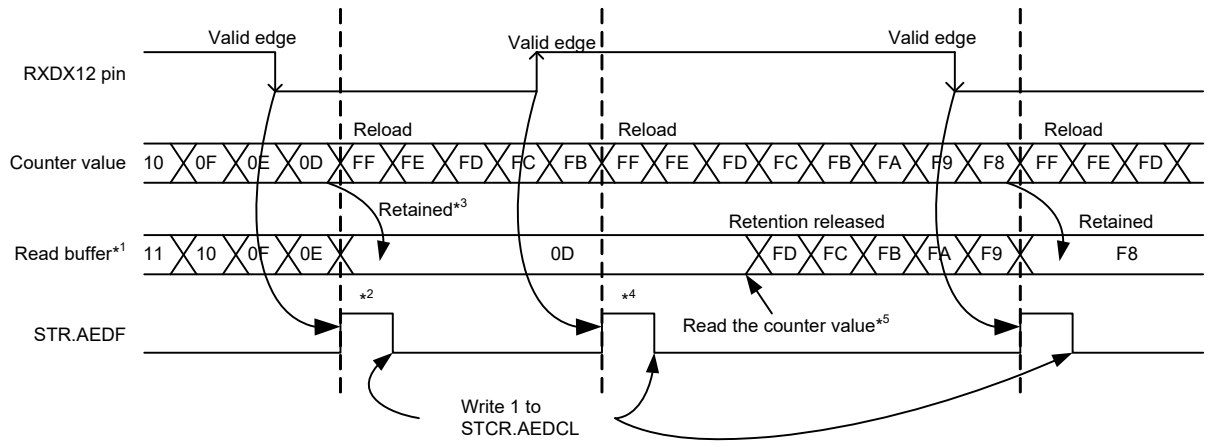

Note 1. The TCNT or TPRE register indicates the contents of the read buffers.
Note 2. The STR.AEDF flag becomes 1 on detection of a valid edge.
Note 3. When an effective edge is detected, the current value of the counter is stored in the read buffer.
Note 4. The value retained in the read buffers due to one valid edge is not updated to the new value even if a further valid edge is detected.
Note 5. Retention of a value in a read buffer due to a valid edge is released by reading the TCNT or TPRE register.

Figure 28.71 Example of Operations for Bit Rate Measurement

28.10.7 Selectable Timing for Sampling Data Received through RXDX12

The extended serial mode control section provides a way of adjusting the timing for the sampling of data received through the RXDX12 pin by setting the CR2.RTS[1:0] bits to select the rising edges of 8th, 10th, 12th, or 14th cycle of the base clock. If the value of the SEMR.ABCS bit is 1, the bits select the rising edges of 4th, 5th, 6th, or 7th cycle of the base clock. Figure 28.72 shows timing for the sampling of data received through RXDX12.

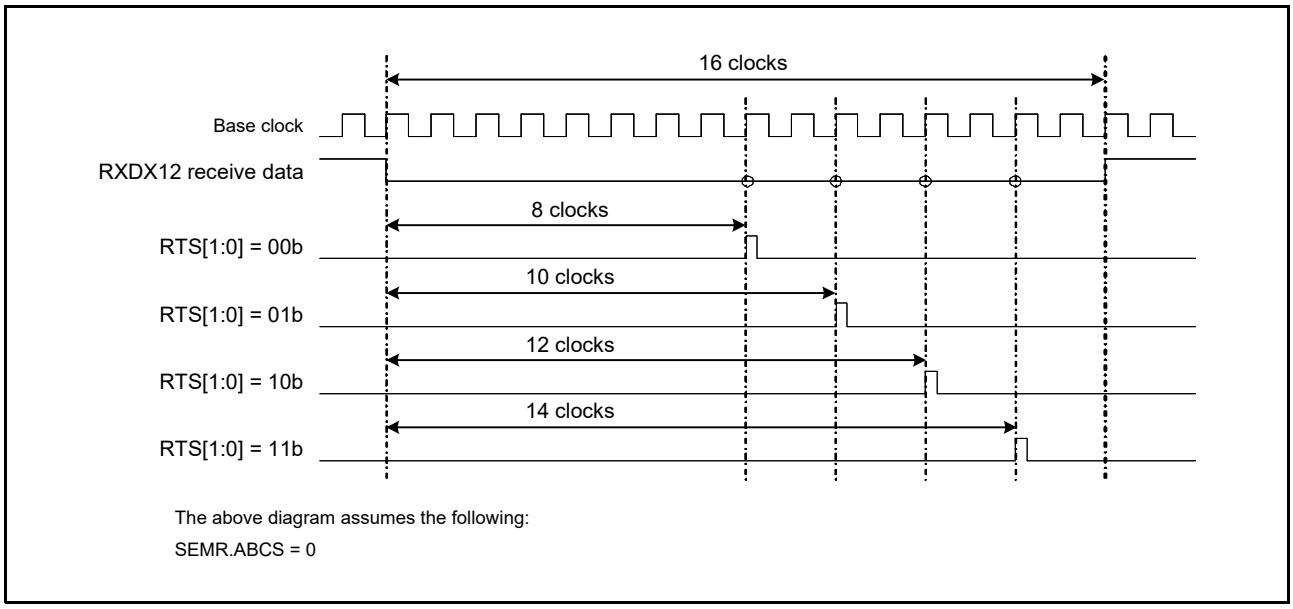

Figure 28.72 Timing for Sampling of Data Received through RXDX12

28.10.8 Timer

The timer has the following operating modes.

(1) Break Field Low Width Output Mode

This mode is for output through the TXDX12 pin of the low level over the Break Field low width at the transmission of a Start Frame. Setting the TMR.TOMS[1:0] bits to 10b switches operation to Break Field low width output mode. The TMR.TCSS[2:0] bits select the clock source for the counter. When the TCR.TCST bit is set to 1, the output on the TXDX12 pin goes to the low level and counting starts. When the timer underflows, the output on the TXDX12 pin goes to the high level and the STR.BFDF flag is set to 1. An SCIX0 interrupt is also generated if the value of the ICR.BFDIE bit is 1. When 0 is written to the TCR.TCST bit, counting stops after reloading of registers TPRE and TCNT. After output of the Break Field low width is completed, stop the timer before it underflows again. Figure 28.73 shows an example of operations in Break Field low width output mode.

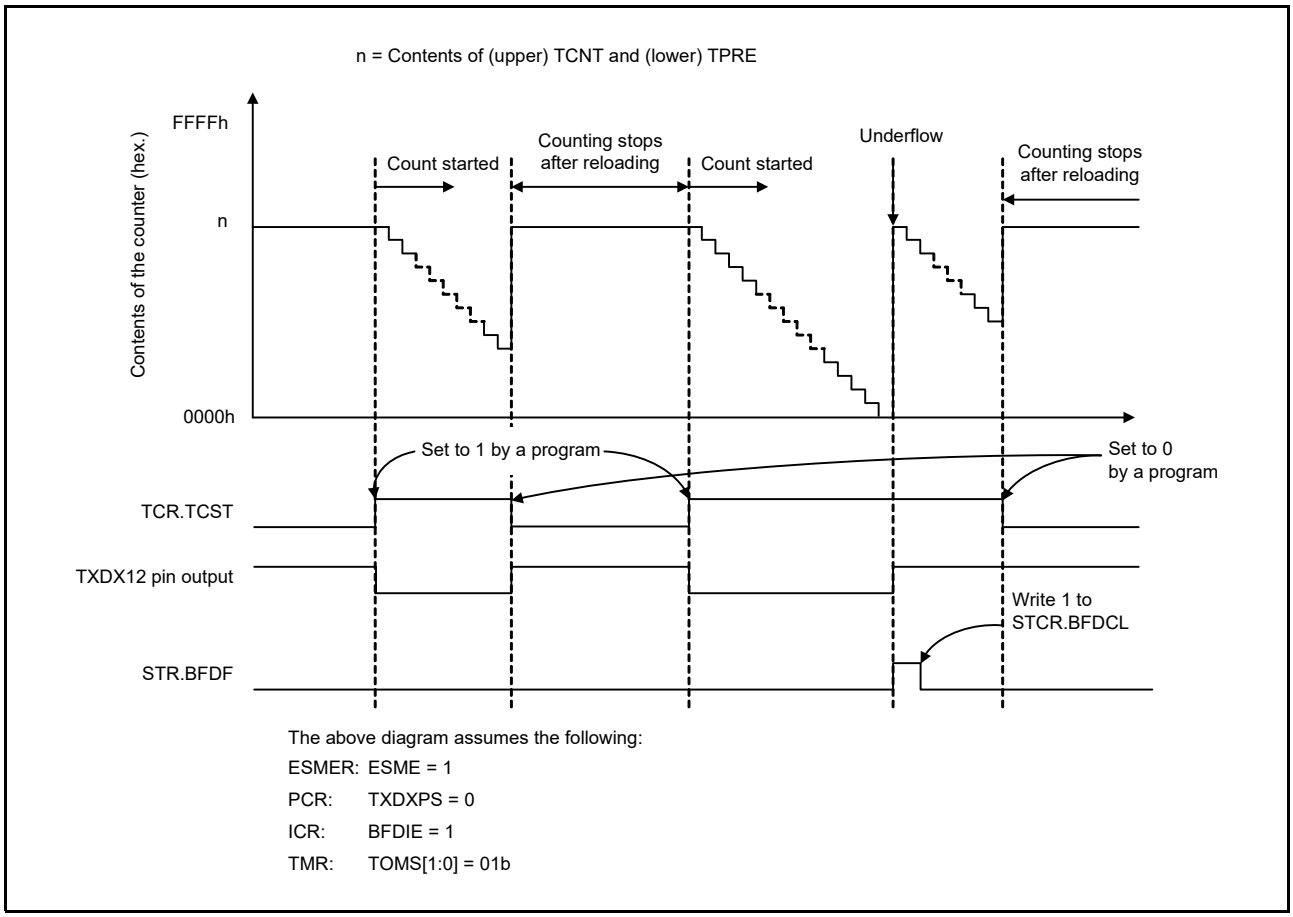

Figure 28.73 Example of Operations in Break Field Low Width Output Mode

(2) Break Field Low Width Determination Mode

This mode is for determining the Break Field low width in the input signal on the RXDX12 pin at the reception of a Start Frame. Setting the TMR.TOMS[1:0] bits to 01b switches operation to Break Field low width determination mode. The TMR.TCSS[2:0] bits select the clock source for the counter. When the TCR.TCST bit is set to 1, the interface enters the Break Field low width determinable state. Determination starts when a low level is input from the RXDX12 pin. When a high level is then input on the RXDX12 pin, registers TPRE and TCNT are reloaded and the interface enters the Break Field low width determinable state. When the timer underflows during Break Field low width determination, the STR.BFDF flag is set to 1. An SCIX0 interrupt is also generated if the value of the ICR.BFDIE bit is 1. If an underflow of the timer during data transfer cause a problem in the form of interrupt generation, stop the timer after Break Field low width determination. Figure 28.74 shows an example of operations in Break Field low width output mode.

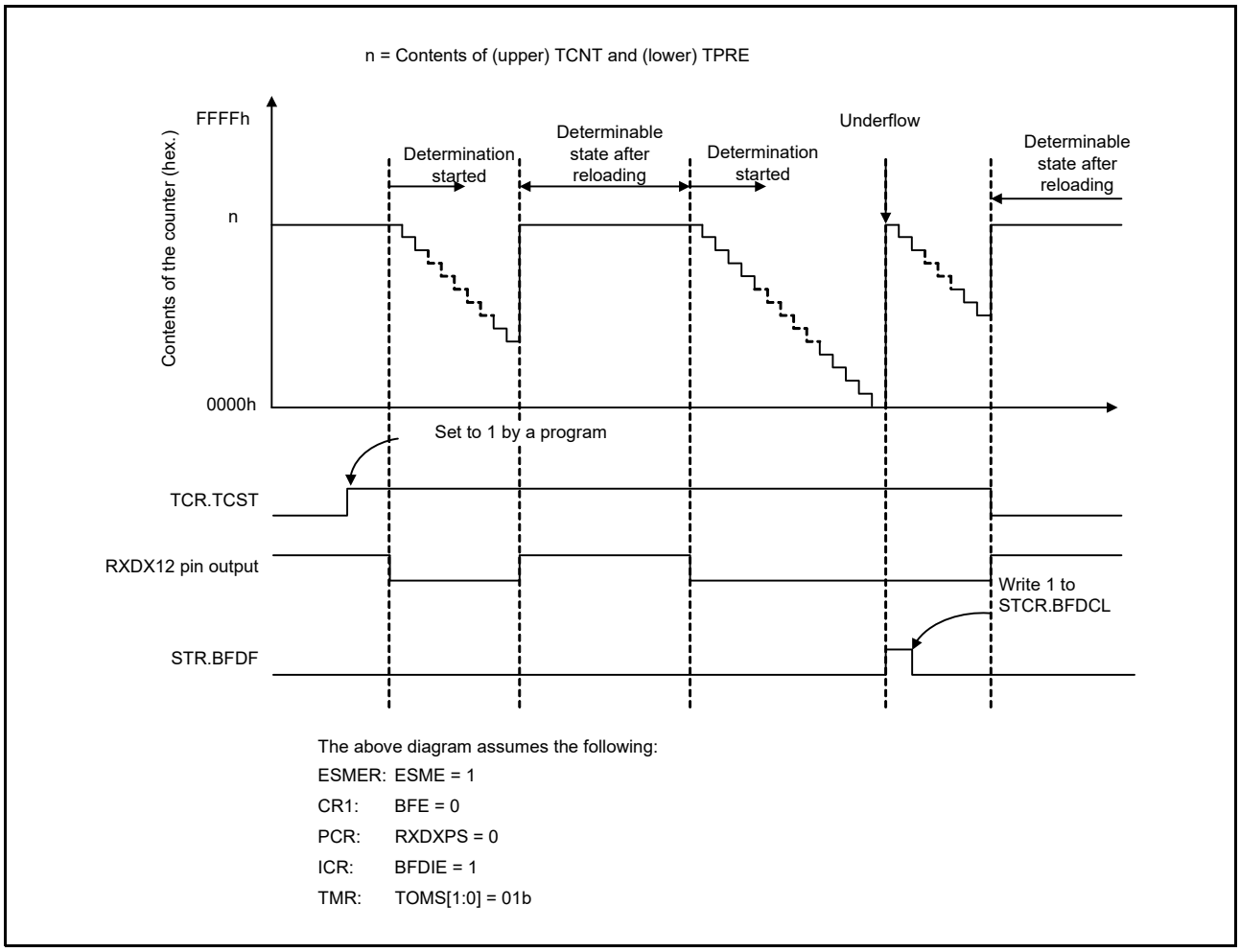

Figure 28.74 Example of Operations in Break Field Low Width Determination Mode

(3) Timer Mode

This mode is for counting cycles of the internal clock as the clock source. Setting the TMR.TOMS[1:0] bits to 00b switches operation to timer mode. The TMR.TCSS[2:0] bits select the clock source for the counter. Counting starts when 1 is written to the TCR.TCST bit and stops when 0 is written to the TCST bit. Registers TPRE and TCNT both count down. The TPRE register counts cycles of the clock source for counting, and underflows of the TPRE register provide the clock source for counting by the TCNT register. When the timer underflows, the STR.BFDF flag is set to 1. An SCIX0 interrupt is also generated if the value of the ICR.BFDIE bit is 1.

28.11 Noise Cancellation Function

Figure 28.75 shows the configuration of the noise filter used for noise cancellation. The noise filter consists of two stages of flip-flop circuits and a match-detection circuit. When the level on the pin matches in three consecutive samples taken at the set sampling interval, the matching level continues to be conveyed internally until the level on the pin again matches in three consecutive samples.

In asynchronous mode, the noise cancellation function can be applied on the RXDn input signal. The period of the base clock (1/16th of a bit-period when SEMR.ABCS = 0 and 1/8th of a bit-period when SEMR.ABCS = 1) is the sampling interval.

In simple I^2C mode, the noise cancellation function can be applied on the SSDAn and SSCLn input signals. The sampling clock is the clock signal produced by frequency-dividing the signal from the clock source for the internal baud-rate generator by one, two, four, or eight as selected by the setting of the SNFR.NFCS[2:0] bits.

If the base clock is stopped with the noise filter enabled and then the clock input is started again, the noise filter operation resumes from where the clock was stopped. If SCR.TE and SCR.RE are set to 0 during base clock input, all of the noise filter flip-flop values are initialized to 1. Accordingly, if the input data is 1 when reception operation resumes, it is determined that a level match is detected and is conveyed to the internal signal. When the level being input corresponds to 0, the initial output of the noise filter is retained until the level matches in three consecutive samples.

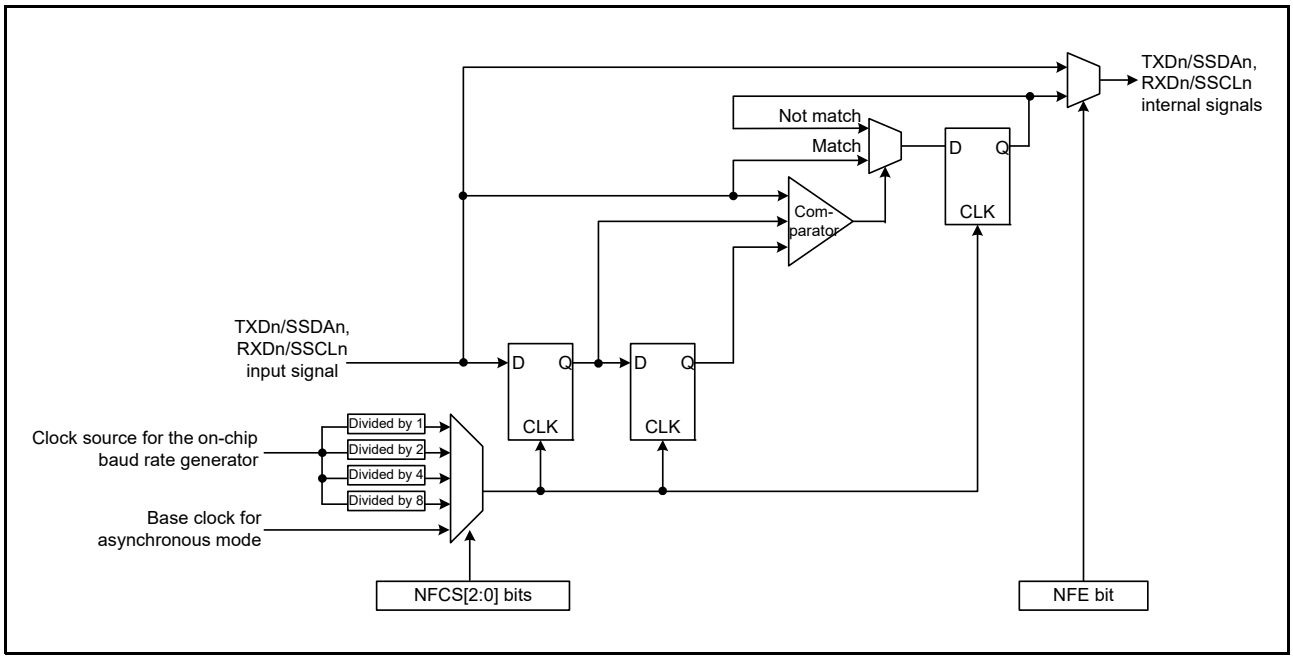

Figure 28.75 Block Diagram of Digital Noise Filter

28.12 Interrupt Sources

28.12.1 Buffer Operations for TXI and RXI Interrupts

If the conditions for a TXI and RXI interrupt are satisfied while the interrupt status flag in the interrupt controller is 1, the SCI does not output the interrupt request but retains it internally (with a capacity for retention of one request per source). When the value of the interrupt status flag in the interrupt controller becomes 0, the interrupt request retained within the SCI is output. The internally retained interrupt request is automatically discarded once the actual interrupt is output. Clearing of the corresponding interrupt enable bit (the TIE or RIE bit in the SCR register) can also be used to discard an internally retained interrupt request.

28.12.2 Interrupts in Asynchronous Mode, Clock Synchronous Mode, and Simple SPI Mode

Table 28.31 lists interrupt sources in asynchronous mode, clock synchronous mode, and simple SPI mode. Individual interrupt sources can be enabled or disabled with the enable bits in the SCR register.

If the SCR.TIE bit is 1, a TXI interrupt request is generated when transmit data is transferred from the TDR or TDRL register*1 to the TSR register. A TXI interrupt request can also be generated by setting the SCR.TE bit to 1 after setting the SCR.TIE bit to 1 or by using a single instruction to set the SCR.TE and SCR.TIE bit to 1 at the same time. A TXI interrupt request can activate the DTC or DMAC to handle data transfer.

A TXI interrupt request is not generated by setting the SCR.TE bit to 1 while the setting of the SCR.TIE bit is 0 or by setting the SCR.TIE bit to 1 while the setting of the SCR.TE bit is 1.*2

Note that setting the SCR.TE bit to 0 while the SCR.TIE bit is 1 leads to the generation of a TXI interrupt.

When new data is not written by the time of transmission of the last bit of the current transmit data and the setting of the SCR.TEIE bit is 1, the SSR.TEND flag becomes 1 and a TEI interrupt request is generated. Furthermore, when the setting of the SCR.TE bit is 1, the SSR.TEND flag retains the value 1 until further transmit data are written to the TDR or TDRL register*1, and setting the SCR.TEIE bit to 1 leads to the generation of a TEI interrupt request.

Writing data to the TDR or TDRL register*1 leads to clearing of the SSR.TEND flag and, after a certain time, discarding of the TEI interrupt request.

If the SCR.RIE bit is 1, an RXI interrupt request is generated when received data is stored in the RDR register. An RXI interrupt request can activate the DTC or DMAC to handle data transfer.

Setting of any from among the ORER, FER, and PER flags in the SSR register to 1 while the SCR.RIE bit is 1 leads to the generation of an ERI interrupt request. An RXI interrupt request is not generated at this time. Clearing all three flags (ORER, FER, and PER) leads to discarding of the ERI interrupt request.

Note 1. In the case where asynchronous mode and 9-bit data length are selected

Note 2. To temporarily disable TXI interrupts at the time of transmission of the last of the data and so on when you wish a new round of transmission to start after handling of the transmission-completed interrupt, control disabling and enabling of the interrupt by using the interrupt request enable bit in the interrupt controller rather than using the SCR.TIE bit. This can prevent the suppression of TXI interrupt requests in the transfer of new data.

Table 28.31 Interrupt Sources

Name	Interrupt Source	Interrupt Flag	DTC Activation	DMAC Activation
ERI	Receive error	ORER, FER, or PER	Not possible	Not possible
RXI	Receive data full	RDRF	Possible	Possible
TXI	Transmit data empty	TDRE	Possible	Possible
TEI	Transmit end	TEND	Not possible	Not possible

28.12.3 Interrupts in Smart Card Interface Mode

Table 28.32 lists interrupt sources in smart card interface mode. A transmit end interrupt (TEI) request cannot be used in this mode.

Table 28.32 SCI Interrupt Sources

Name	Interrupt Source	Interrupt Flag	DTC Activation	DMAC Activation
ERI	Receive error or error signal detection	ORER, PER, or ERS	Not possible	Not possible
RXI	Receive data full	—	Possible	Possible
TXI	Transmit data empty	TEND	Possible	Possible

Data transmission/reception using the DTC or DMAC is also possible in smart card interface mode, similar to in the normal SCI mode. In transmission, when the SSR.TEND flag is set to 1, a TXI interrupt request is generated. This TXI interrupt request activates the DTC or DMAC allowing transfer of transmit data if the TXI request is specified beforehand as a source of DTC or DMAC activation. The TEND flag is automatically set to 0 when the DTC or DMAC transfers the data.

If an error occurs, the SCI automatically retransmits the same data. During the retransmission, the TEND flag is kept to 0 and the DTC or DMAC is not activated. Therefore, the SCI and DTC or DMAC automatically transmit the specified number of bytes, including retransmission in the case of error occurrence. However, the SSR.ERS flag is not automatically cleared to 0 at error occurrence. Therefore, the ERS flag must be cleared by previously setting the SCR.RIE bit to 1 to enable an ERI interrupt request to be generated at error occurrence.

When transmitting/receiving data using the DTC or DMAC, be sure to make settings to enable the DTC or DMAC before making SCI settings. For DTC or DMAC settings, refer to section 18, Data Transfer Controller (DTCa) and section 17, DMA Controller (DMACA).

In reception, an RXI interrupt request is generated when receive data is set to the RDR register. This RXI interrupt request activates the DTC or DMAC allowing transfer of receive data if the RXI request is specified beforehand as a source of DTC or DMAC activation. If an error occurs, the error flag is set. Therefore, the DTC or DMAC is not activated and an ERI interrupt request is issued to the CPU instead; the error flag must be cleared.

28.12.4 Interrupts in Simple I2C Mode

The interrupt sources in simple I2C mode are listed in Table 28.33. The STI interrupt is allocated to the transmit end interrupt (TEI) request. The receive error interrupt (ERI) request cannot be used.
The DTC or DMAC can also be used to handle transfer in simple I2C mode.
When the value of the SIMR2.IICINTM bit is 1, an RXI request will be generated on the falling edge of the SSCLn signal for the eighth bit. If the RXI has been set up as an activating request for the DTC or DMAC beforehand, the RXI request will activate the DTC or DMAC to handle transfer of the received data. Furthermore, a TXI request is generated on the falling edge of the SSCLn signal for the ninth bit (acknowledge bit). If the TXI has been set up as an activating request for the DTC or DMAC beforehand, the TXI request will activate the DTC or DMAC to handle transfer of the transmit data.
When the value of the SIMR2.IICINTM bit is 0, an RXI request (ACK detection) if the input on the SSDAn pin is at the low level or a TXI request (NACK detection) if the input on the SSDAn pin is at the high level will be generated on the rising edge of the SSCLn signal for the ninth bit (acknowledge bit). If the RXI has been set up as an activating request for the DTC or DMAC beforehand, the RXI request will activate the DTC or DMAC to handle transfer of the received data. Also, if the DTC or DMAC is used for data transfer in reception or transmission, be sure to set up and enable the DTC or DMAC before setting up the SCI.
When the IICSTAREQ, IICRSTAREQ, and IICSTPREQ bits in the SIMR3 register are used to generate a start condition, restart condition, or stop condition, the STI request is issued when generation is complete.

Table 28.33 SCI Interrupt Sources

Name	Interrupt Source		Interrupt Flag	DTC Activation	DMAC Activation
	IICINTM bit = 0	IICINTM bit = 1			
RXI	ACK detection	Reception	—	Possible	Possible
TXI	NACK detection	Transmission	—	Possible*1	Possible*1
STI	Completion of generation of a start, restart, or stop condition		IICSTIF	Not possible	Not possible

Note 1. Activation of the DTC or DMAC is only possible when the SIMR2.IICINTM bit is 1 (use reception and transmission interrupts).

28.12.5 Interrupt Requests from the Extended Serial Mode Control Section

The extended serial mode control section has a total of six types of interrupt request for generating the SCIX0 interrupt (Break Field low width detected), SCIX1 interrupt (Control Field 0 match, Control Field 1 match, priority interrupt bit detected), SCIX2 interrupt (bus collision detected), and SCIX3 interrupt (valid edge detected). When any of the interrupt factors is generated, the corresponding status flag is set to 1. Details of all of the interrupt requests are listed in Table 28.34.

Table 28.34 Interrupt Sources of the Extended Serial Mode Control Section

Interrupt Request	Status Flag	Interrupt Factors
SCIX0 interrupt (Break Field low width detected)	BFDF	• Detection of a Break Field low width longer than the interval corresponding to the timer setting • Completion of the output of a Break Field low width over the interval corresponding to the timer setting • Underflow of the timer
SCIX1 interrupt (Control Field 0 match)	CF0MF	The data received in Control Field 0 matching the value set in the CF0DR register
SCIX1 interrupt (Control Field 1 match)	CF1MF	The data received in Control Field 1 matching the value set in the PCF1DR or SCF1DR register
SCIX1 interrupt (priority interrupt bit detected)	PIBDF	The value of the bit specified as the priority interrupt bit matching the value set in the PCF1DR register
SCIX2 interrupt (bus collision detected)	BCDF	The output level on the TXDX12 pin and the input level on the RXDX12 pin not matching on three consecutive cycles of the bus collision detection clock
SCIX3 interrupt (valid edge detected)	AEDF	Detection of a valid edge during bit rate measurement

28.13 Event Linking

By employing interrupt request signals as event signals, SCI5 is able to provide linked operation through the event link controller (ELC) for modules selected in advance.
Event signals can be output regardless of the values of the corresponding interrupt request enable bits.

(1) Error (receive error, error signal detected) event output

- Indicates abnormal termination due to a parity error during reception in asynchronous mode.
- Indicates abnormal termination due to a framing error during reception in asynchronous mode.
- Indicates abnormal termination due to an overrun error during reception.
- Indicates detection of the error signal during transmission in smart card interface mode.

(2) Receive data full event output

- Indicates that received data have been set in the receive data register (RDR or RDRL).
- Indicates that ACK has been detected if the SIMR2.IICINTM bit is 0 in simple I^2C mode.
- Indicates that the 8th-bit SSCL5 falling edge has been detected if the SIMR2.IICINTM bit is 1 in simple I^2C mode.
- When the SIMR2.IICINTM bit is 1 during master transmission in simple I^2C mode, set the event link controller (ELC) so that receive data full events are not used.

(3) Transmit data empty event output

- Indicates that the SCR.TE bit has been changed from 0 to 1.
- Indicates that transmit data have been transferred from the transmit data register (TDR or TDRL) to the transmit shift register (TSR).
- Indicates that transmission has been completed in smart card interface mode.
- Indicates that NACK has been detected if the SIMR2.IICINTM bit is 0 in simple I^2C mode.
- Indicates that the ninth-bit SSCL5 falling edge has been detected if the SIMR2.IICINTM bit is 1 in simple I^2C mode.

(4) Transmit end event output

- Indicates the completion of transmission.
- Indicates that the starting condition, resumption condition, or termination condition has been generated in simple I^2C mode.

28.14 Usage Notes

28.14.1 Setting the Module Stop Function

Module stop control register B (MSTPCRB) is used to stop and start SCI operations. With the value after a reset, SCI operations are stopped. Register access is enabled by releasing the module stop state. For details, refer to section 11, Low Power Consumption.

28.14.2 Break Detection and Processing

When a framing error is detected, a break can be detected by reading the RXDn pin value directly. In a break, the input from the RXDn pin becomes all 0s, and so the SSR.FER flag is set to 1 (framing error has occurred), and the SSR.PER flag may also be set to 1 (parity error has occurred). When the SEMR.RXDESEL bit is 0, the SCI continues the receive operation even after a break is received. Therefore, note that even if the FER flag is set to 0 (no framing error occurred), it will be set to 1 again. When the SEMR.RXDESEL bit is 1, the SCI sets the SSR.FER flag to 1 and stops receiving operation until a start bit of the next data frame is detected. If the SSR.FER flag is set to 0 at this time, the SSR.FER flag retains 0 during the break. When the RXDn pin becomes high and the break ends, detecting the beginning of the start bit at the first falling edge of the RXDn pin allows the SCI to start the receiving operation.

28.14.3 Mark State and Sending Breaks

When the SCR.TE bit is 0 (serial transmission is disabled), the TXDn pin becomes high-impedance. To forcibly set the TXDn pin to mark or space state while the TE bit is 0, set the I/O port associated registers and switch the TXDn pin to general output port.

For holding the communication line in the mark (“1”) state until the TE bit is set to 1 (serial transmission is enabled), set the corresponding bit in the PODR register to 1 for high output from general output port. To start communications, set the TE bit to 1 and then the corresponding bit in the PMR register to 1.

To send a break (the space state for longer than a certain period of time) while data transmission, set the corresponding bit in the PODR register to 0 (low output), and set the corresponding bit in the PMR register to 0 (general I/O port). Then set the TE bit to 0 if necessary. When the TE bit is set to 0, the transmitter is initialized regardless of the current transmit status.

28.14.4 Receive Error Flags and Transmit Operations (Clock Synchronous Mode and Simple SPI Mode)

Transmission cannot be started when a receive error flag (SSR.ORER) is set to 1, even if data is written to the TDR register. Be sure to set the receive error flags to 0 before starting transmission. Note also that the receive error flags cannot be set to 0 even if the SCR.RE bit is set to 0 (serial reception is disabled).

28.14.5 Writing Data to the TDR Register

Data can be written to registers TDR, TDRH, and TDRL. However, if new data is written to registers TDR, TDRH, and TDRL when transmit data is remaining in registers TDR, TDRH, and TDRL, the previous data in registers TDR, TDRH, and TDRL is lost because it has not been transferred to the TSR register yet. Be sure to write transmit data to registers TDR, TDRH, and TDRL in the TXI interrupt request handling routine.

28.14.6 Restrictions on Clock Synchronous Transmission (Clock Synchronous Mode and Simple SPI Mode)

When the external clock source is used as a synchronization clock, the following restrictions apply.

(1) Start of transmission

Update the TDR register by the CPU, DMAC, or DTC and wait for at least five PCLK cycles before allowing the transmit clock to be input (refer to Figure 28.76).

(2) Continuous transmission

(a) Write the next transmit data to the TDR or TDRL register before the falling edge of the transmit clock (bit 7) (refer to Figure 28.76).

(b) When updating the TDR register after bit 7 has started to transmit, update the TDR register while the synchronization clock is in the low-level period, and set the high-level width of the transmit clock (bit 7) to four PCLK cycles or longer (refer to Figure 28.76).

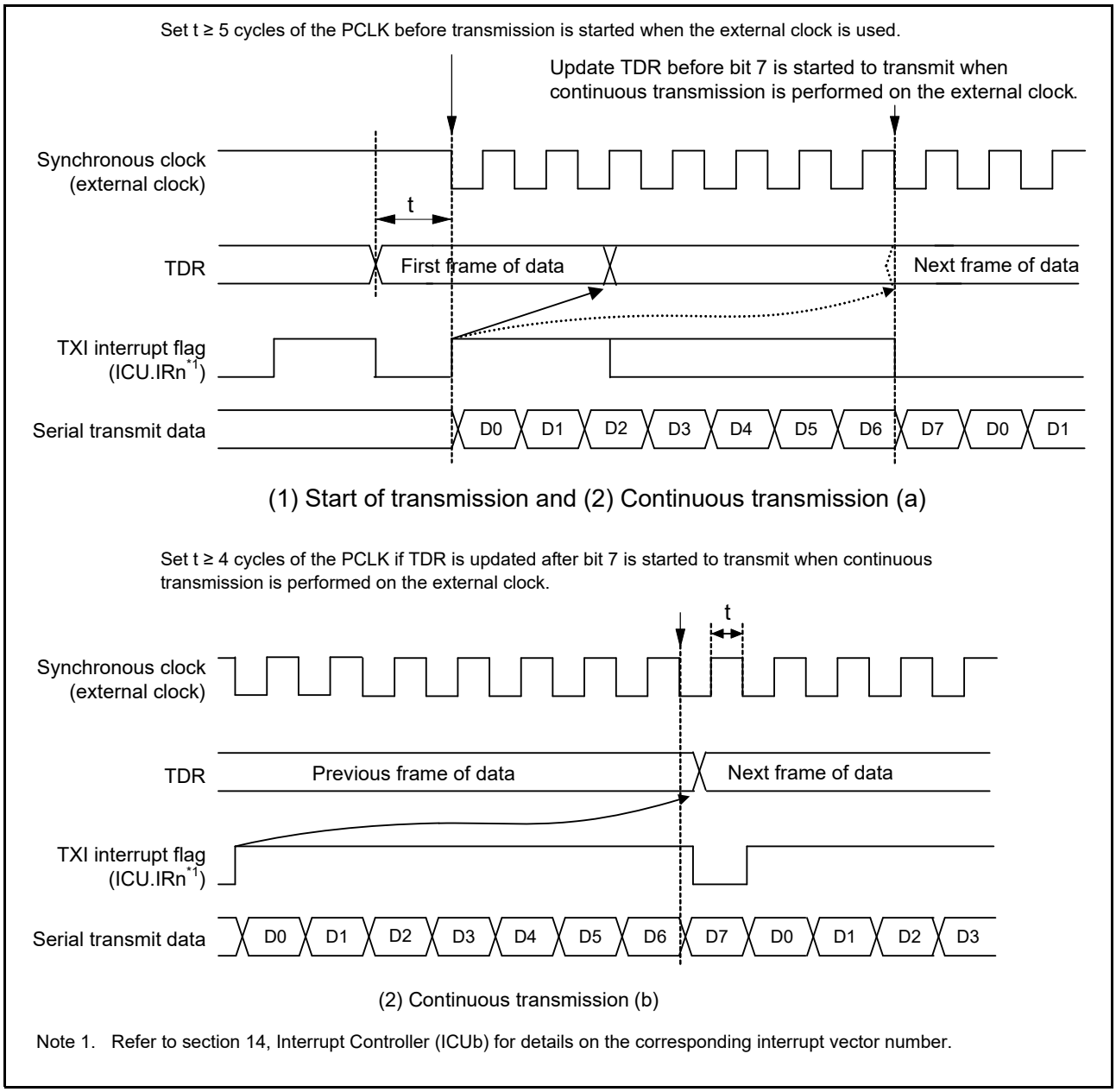

Figure 28.76 Restrictions on Use of External Clock in Clock Synchronous Transmission

28.14.7 Restrictions on Using DMAC or DTC

When using the DMAC or DTC to read the RDR, RDRH, and RDRL registers, be sure to set the receive data full interrupt (RXI) as the activation source of the relevant SCI.

28.14.8 Notes on Starting Transfer

At the point where transfer starts when the interrupt status flag (IRn.IR flag) in the interrupt controller is 1, follow the procedure below to clear interrupt requests before permitting operations (by setting the SCR.TE or SCR.RE bit to 1). For details on the interrupt status flag, refer to section 14, Interrupt Controller (ICUb).

- Confirm that transfer has stopped (the setting of the SCR.TE or SCR.RE bits is 0).
- Set the corresponding interrupt enable bit (SCR.TIE or SCR.RIE) to 0.
- Read the corresponding interrupt enable bit (SCR.TIE or SCR.RIE bit) to check that it has become 0.
- Set the interrupt status flag (IRn.IR flag) in the interrupt controller to 0.

28.14.9 SCI Operations during Low Power Consumption State

(1) Transmission

When making settings for the module stopped state or in transitions to software standby, stop operations (by setting the TIE, TE, and TEIE bits in the SCR register to 0) after switching the TXDn pin to the general I/O port pin function. Setting the TE bit to 0 resets the TSR register and the SSR.TEND flag. Depending on the port settings, output pins may output the level before a transition to the low power consumption state is made after release from the module stopped state or software standby mode. When transitions to these states are made during transmission, the data being transmitted become indeterminate.

To transmit data in the same transmit mode after cancellation of the low power consumption state, set the TE bit to 1, read the SSR register, and write data to the TDR register sequentially to start data transmission. To transmit data with a different transmit mode, initialize the SCI first.

Figure 28.77 shows a sample flowchart for transition to software standby mode during transmission. Figure 28.78 and Figure 28.79 show the port pin states during transition to software standby mode.

Before specifying the module stop state or making a transition to software standby mode from the transmit mode using DTC/DMA transfer, stop the transmit operations (TE = 0). To start transmission after cancellation using the DTC/DMAC, set the TE and TIE bits to 1. The TXI interrupt flag is set to 1 and transmission starts using the DTC/DMAC.

(2) Reception

Before specifying the module stop state or making a transition to software standby mode, stop the receive operations (SCR.RE = 0). If transition is made during data reception, the data being received will be invalid.

To receive data in the same receive mode after cancellation of the low power consumption state, set the RE bit to 1, and then start reception. To receive data in a different receive mode, initialize the SCI first.

Figure 28.80 shows a sample flowchart for transition to software standby mode during reception.

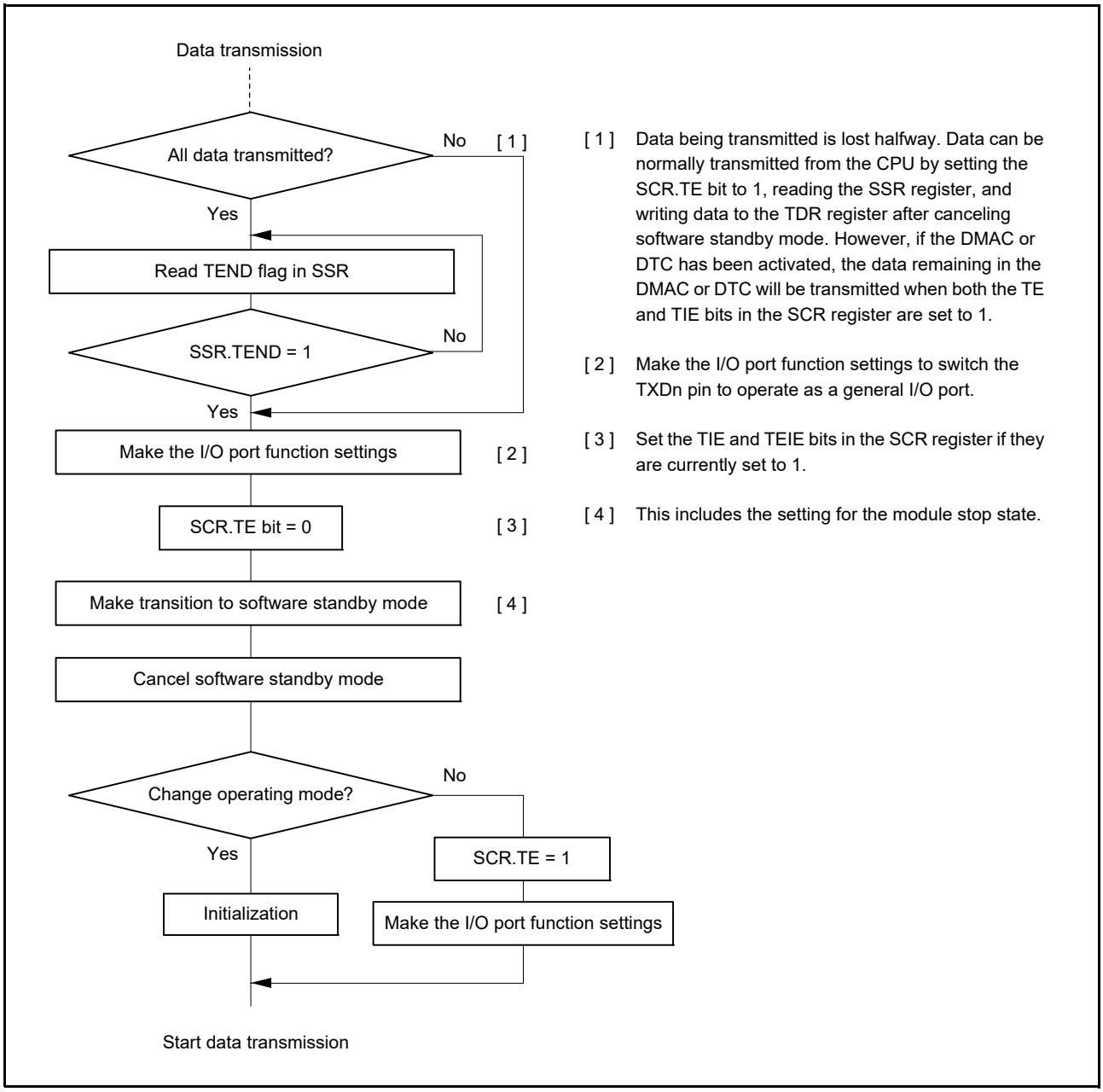

Figure 28.77 Example of Flowchart for Transition to Software Standby Mode during Transmission

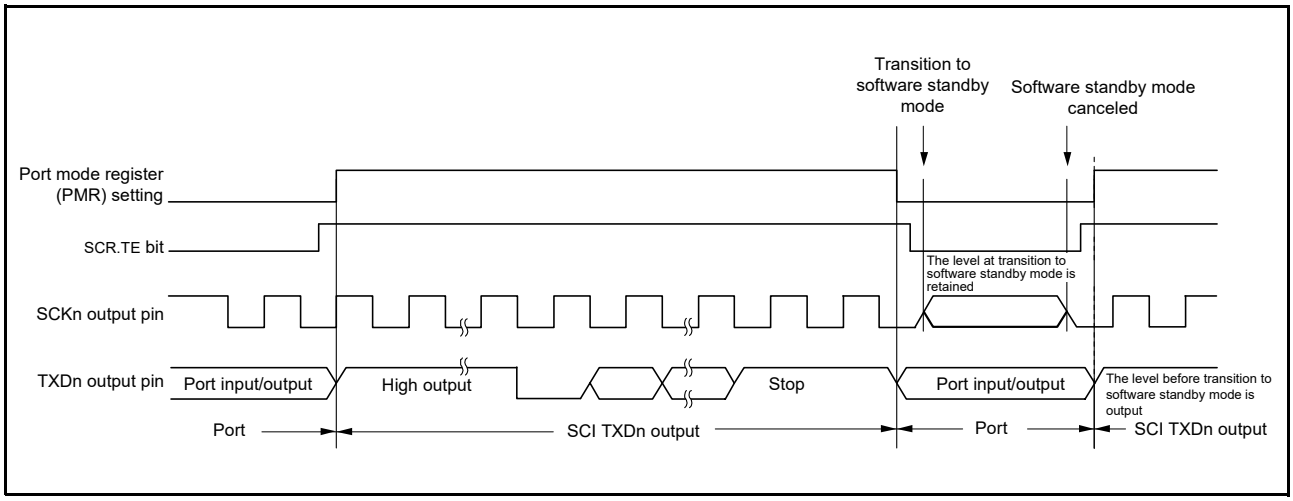

Figure 28.78 Port Pin States during Transition to Software Standby Mode (Internal Clock, Asynchronous Transmission)

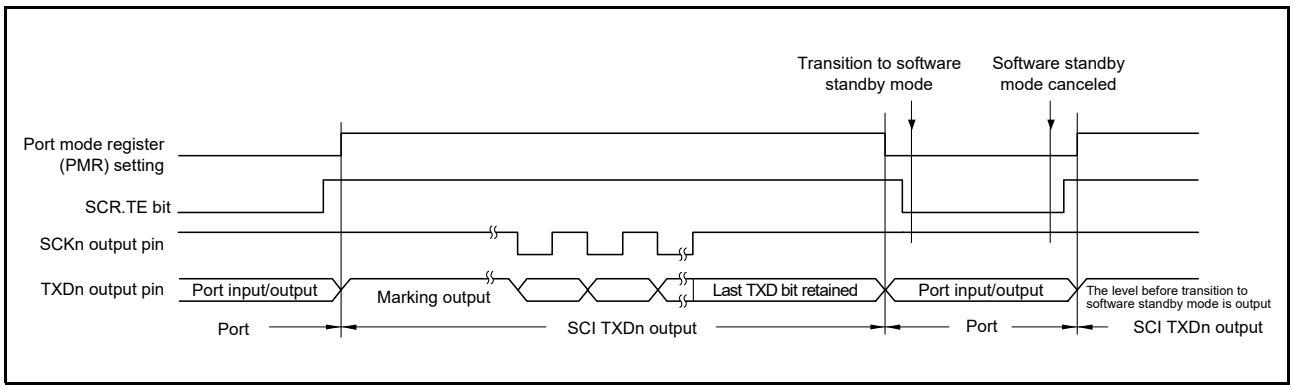

Figure 28.79 Port Pin States during Transition to Software Standby Mode (Internal Clock, Clock Synchronous Transmission)

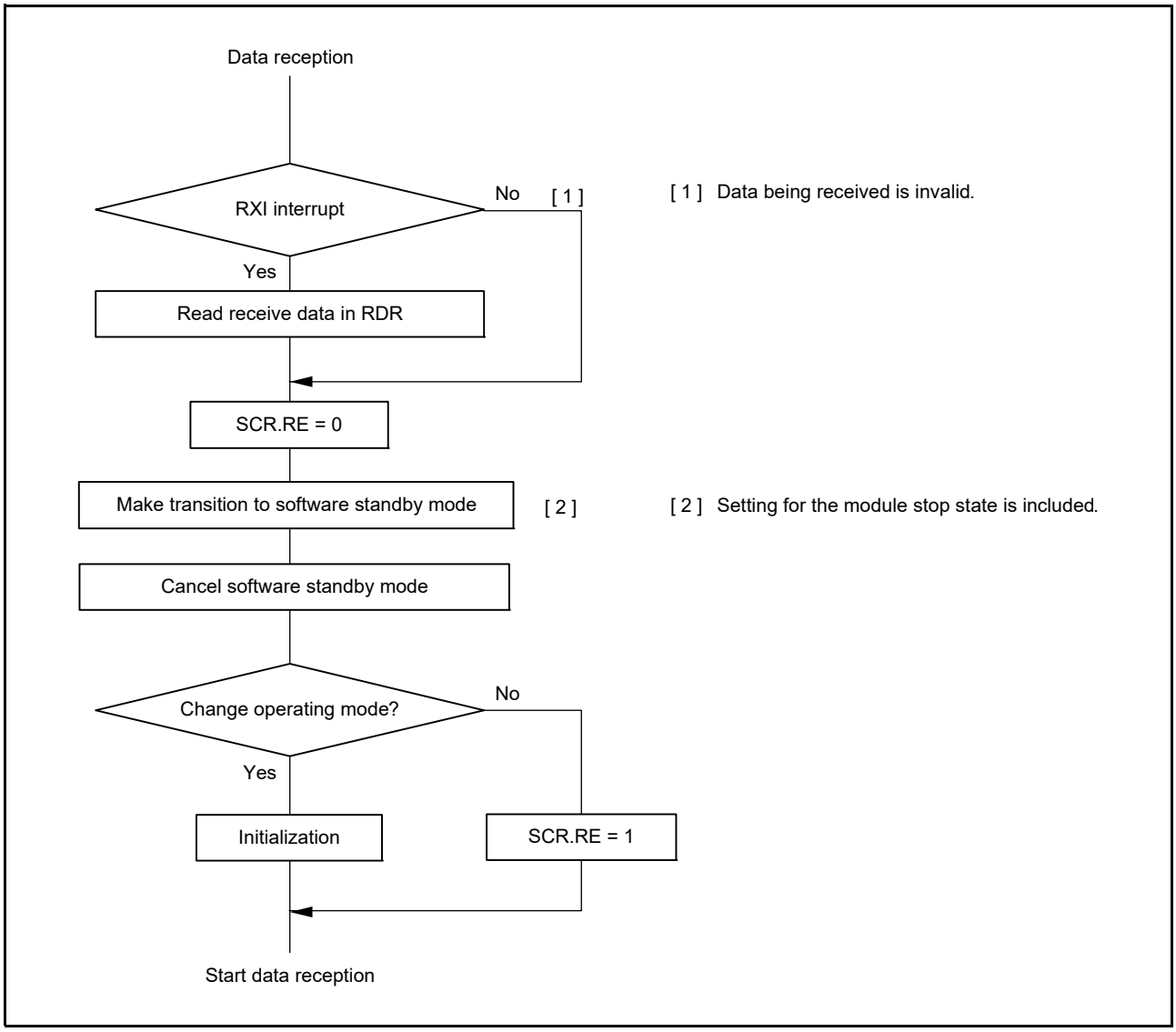

Figure 28.80 Example of Flowchart for Transition to Software Standby Mode during Reception

28.14.10 External Clock Input in Clock Synchronous Mode and Simple SPI Mode

In clock synchronous mode and simple SPI mode, the external clock SCKn must be input as follows:
High-pulse period, low-pulse period = 2 PCLK cycles or more, period = 6 PCLK cycles or more

28.14.11 Limitations on Simple SPI Mode

(1) Master Mode

- Use a resistor to pull up or pull down the clock line matching the initial settings for the transfer clock set by the SPMR.CKPH and CKPOL bits when the SPMR.SSE bit is 1.
  This prevents the clock line from being placed in the high-impedance state when the SCR.TE bit is set to 0 or unexpected edges from being generated on the clock line when the SCR.TE bit is changed from 0 to 1. When the SPMR.SSE bit is 0 in single master mode, pulling up or pulling down the clock line is not necessary because the clock line is not placed in the high-impedance state even when the SCR.TE bit is set to 0.
- In the case of the setting for clock delay (SPMR.CKPH bit is 1), the receive data full interrupt (RXI) is generated before the final clock edge on the SCKn pin as indicated in Figure 28.81. If the TE and RE bits in the SCR register become 0 at this time before the final edge of the clock signal on the SCKn pin, the SCKn pin is placed in the high-impedance state, so the width of the last clock pulse of the transfer clock is shortened. Furthermore, an RXI interrupt may lead to the input signal on the SSn# pin of a connected slave going to the high level before the final edge of the clock signal on the SCKn pin, leading to incorrect operation of the slave.
- In a multi-master configuration, take care because the SCKn pin output becomes high-impedance while the input on the SSn# pin is at the low level if a mode fault error occurs as the current character is being transferred, stopping supply of the clock signal to the connected slave. Remake the settings for the connected slave to avoid misaligned bits when transfer is restarted.

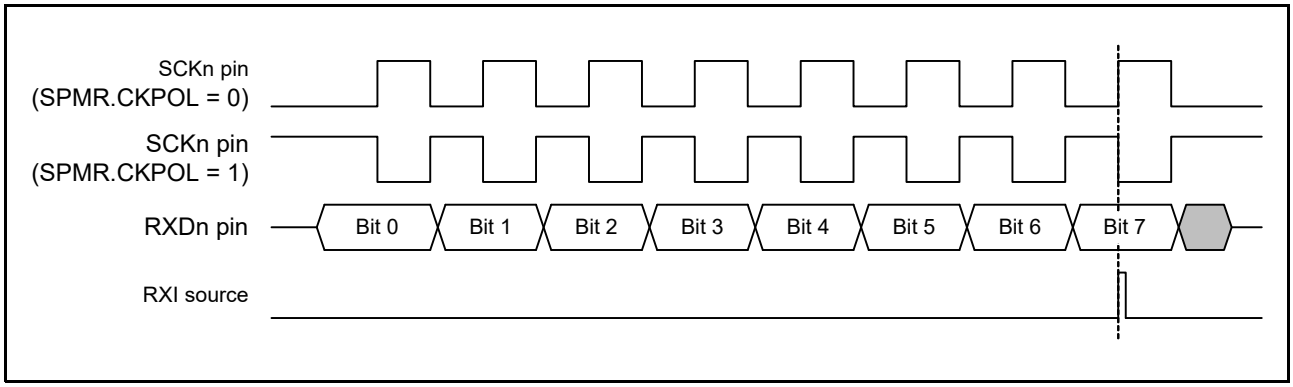

Figure 28.81 Timing of the RXI Interrupt in Simple SPI Mode (with Clock Delay)

(2) Slave Mode

- Secure at least five cycles of the PCLK from writing transmit data in the TDR register to start of the external clock input. Also secure at least five cycles of the PCLK from input of low level on the SSn# pin to start of the external clock input.
- Provide an external clock signal from the master the same as the transmit/receive data length.
- Control the input on the SSn# pin before the start and after the end of data transfer.
- When the level being input on the SSn# pin is to be changed from low to high while the current character is being transferred, set the TE and RE bits in the SCR register to 0 and, after remaking the settings, restart transfer of the first byte.

28.14.12 Limitation 1 on Usage of the Extended Serial Mode Control Section

When the PCR.SHARPS bit is set to 1, output on the TXDX12/RXDX12 pin is only possible when the following conditions apply.

- The timer is in Break Field low width output mode and the value of the TCR.TCST bit is 1 (when the TCST bit is set to 1, the high level continues to be output for up to one cycle of the clock source for counting by the timer counter before output of the low level)
- The value of the SCR.TE bit is 1.

28.14.13 Limitation 2 on Usage of the Extended Serial Mode Control Section

The TXI, RXI, ERI, and TEI interrupt requests are generated even if the extended serial mode is enabled. However, the RXI interrupt should not be enabled during reception of a Start Frame because the extended serial mode control section uses the receive data full signal.
To use the RXI interrupts during a reception of the Information Frame, use it in accordance with one of the following procedures. When a receive error is detected, clear the receive error flag and initialize the extended serial mode control section.

(1) Set the SCR.RIE bit to 0 to disable the output of interrupt requests. Check the error flags in the SSR register on completion of the reception of a Start Frame, because an ERI interrupt is not generated if a receive error occurs. After reception of the Start Frame is completed, set the SCR.RIE bit to 1 by the time the first byte of the Information Frame is received.
(2) Set the SCR.RIE bit to 1 to disable RXI interrupts and enable ERI interrupts for ICU.
Clear the IRn.IR flag to enable the acceptance of RXI interrupts by ICU by the time the first byte of the Information Frame is received after the completion of Start Frame reception.

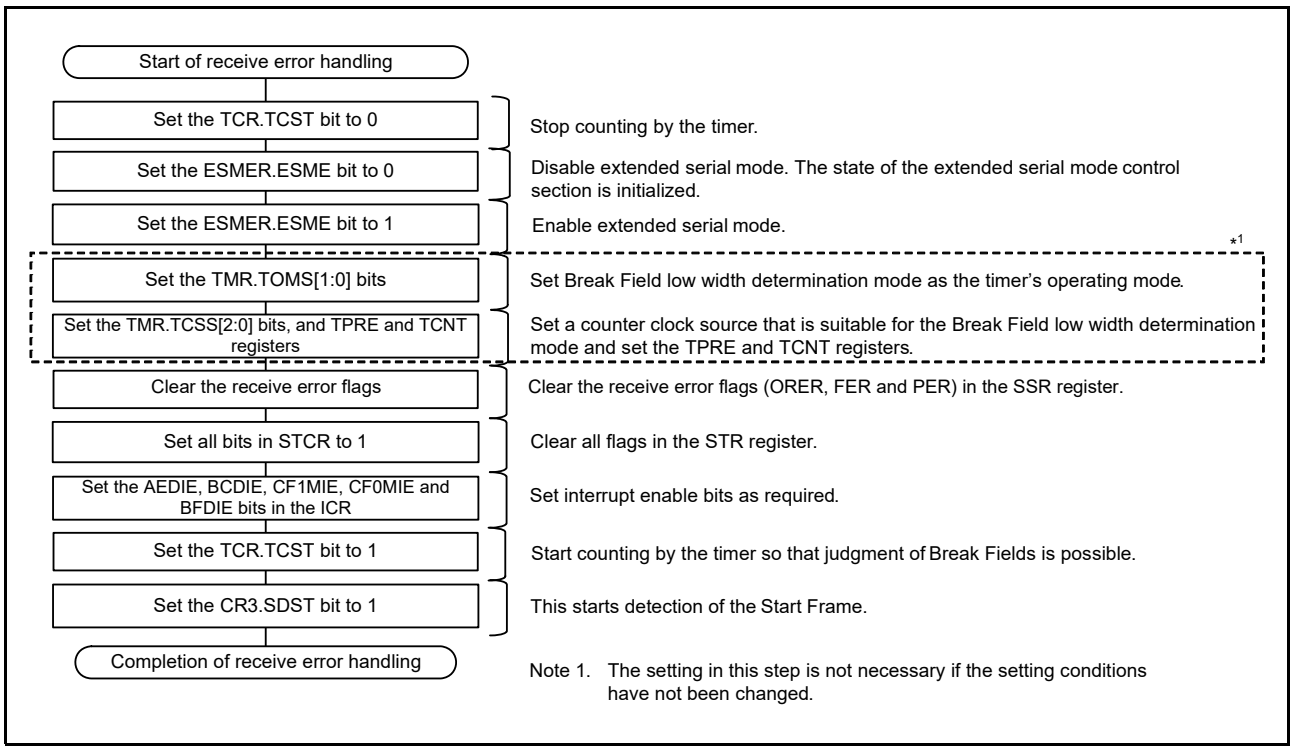

Figure 28.82 Example of Flowchart for Receive Error Handling (during Reception of the Start Frame)

28.14.14 Note on Transmit Enable Bit (TE Bit)

When setting the pin function to “TXDn” while the SCR.TE bit is 0 (serial transmission is disabled) or setting the TE bit to 0 while the pin function is “TXDn”, output of the TXDn pin becomes high-impedance.
Prevent the TXDn line from becoming high-impedance by any of the following ways:

(1) Connect a pull-up resistor to the TXDn line.
(2) Set the TE bit to 1*1 before changing the pin function to “TXDn”. Before setting the TE bit to 0, change the pin function to “general-purpose I/O port” and drive the pin high or low.

Note 1. An interrupt is generated when the TE bit is set to 1 while the TXI interrupt is enabled. If this creates a problem, change the pin function to “TXDn” first, and then set the corresponding ICU.IERm.IENj bit to 1.

28.14.15 Note on Stopping Reception When Using the RTS Function in Asynchronous Mode

One clock cycle of PCLK is required for the time from setting the SCR.RE bit to 0 to stopping the RTS signal generator in asynchronous mode.
When reading the RDR (or RDRL) register after setting the SCR.RE bit to 0, confirm that the RE bit has been set to 0 before reading the RDR (or RDRL) register to prevent these two processes from being performed consecutively.

29. I2C-bus Interface (RIICa)

This MCU has a single-channel I2C-bus interface (RIIC0).
The RIIC module conforms with the NXP I2C-bus (Inter-IC bus) interface and provides a subset of its functions.
In this section, "PCLK" is used to refer to PCLKB.

29.1 Overview

Table 29.1 lists the specifications of the RIIC, Figure 29.1 shows a block diagram of the RIIC. Table 29.2 lists the I/O pins of the RIIC.

Table 29.1 RIIC Specifications (1/2)

Item	Description
Communications format	• I2C-bus format or SMBus format • Master mode or slave mode selectable • Automatic securing of the various setup times, hold times, and bus-free times for the transfer rate
Transfer rate	Fast-mode is supported (up to 400 kbps)
Serial clock (SCL)	For master operation, the duty cycle of the SCL is selectable in the range from 4 to 96%.
Generating and detecting conditions	Start, restart, and stop conditions are automatically generated. Start conditions (including restart conditions) and stop conditions are detectable.
Slave address	• Up to three different slave addresses can be set. • 7-bit and 10-bit address formats are supported (along with the use of both at once). • General call addresses, device ID addresses, and SMBus host addresses are detectable.
Acknowledgment	• For transmission, the acknowledgment bit is automatically loaded. Transfer of the next data for transmission can be automatically suspended on detection of a not-acknowledge signal. • For reception, the acknowledgment bit is automatically transmitted. If a wait between the eighth and ninth clock pulses has been selected, software control of the acknowledgment in response to the received data is possible.
Wait function	• During reception, cycles of waiting by holding the SCL line low can be inserted at the following two types of timing: Waiting between the eighth and ninth clock pulses Waiting between the ninth clock pulse and the first clock pulse of the next byte
SDA output delay function	Changes in the timing of the output of data bits for transmission, and of the acknowledgment bit, can be delayed relative to the falling edge of SCL.
Arbitration	• For multi-master operation Clock synchronization for the SCL line in cases of conflict with the SCL signal from another master is possible. When generating the start condition would create conflict on the bus, loss in arbitration is detected by testing for non-matching between the internal data level and the actual level on the SDA line. During master operation, loss in arbitration is detected by testing for non-matching between the actual level on the SDA line and the internal data level. • Loss in arbitration due to detection of the start condition while the bus is busy is detectable (to prevent the generating of double start conditions). • Loss in arbitration in transfer of a not-acknowledge signal due to the internal signal (NACK) and the actual level on the SDA line not matching is detectable. • Loss in arbitration due to non-matching of internal data level and the actual level on the SDA line is detectable in slave transmission.
Timeout function	The internal timeout function is capable of detecting long-interval stop of the SCL.
Noise cancellation	The interface incorporates digital noise filters for both the SCL and SDA signals, and the width for noise cancellation by the filters is adjustable by software.
Interrupt sources	Four sources: • Communication error/communication event Detection of arbitration-lost, NACK, timeout, a start condition including a restart condition, or a stop condition • Receive data full (including matching with a slave address) • Transmit data empty (including matching with a slave address) • Transmission end

Table 29.1 RIIC Specifications (2/2)

Item	Description
Low power consumption function	Module stop state can be set.
RIIC operating modes	• Four Master transmit mode, master receive mode, slave transmit mode, and slave receive mode
Event link function (output)	Four sources (RIIC0): • Communication error/communication event Detection of arbitration-lost, NACK, timeout, a start condition including a restart condition, or a stop condition • Receive data full (including matching with a slave address) • Transmit data empty (including matching with a slave address) • Transmission end

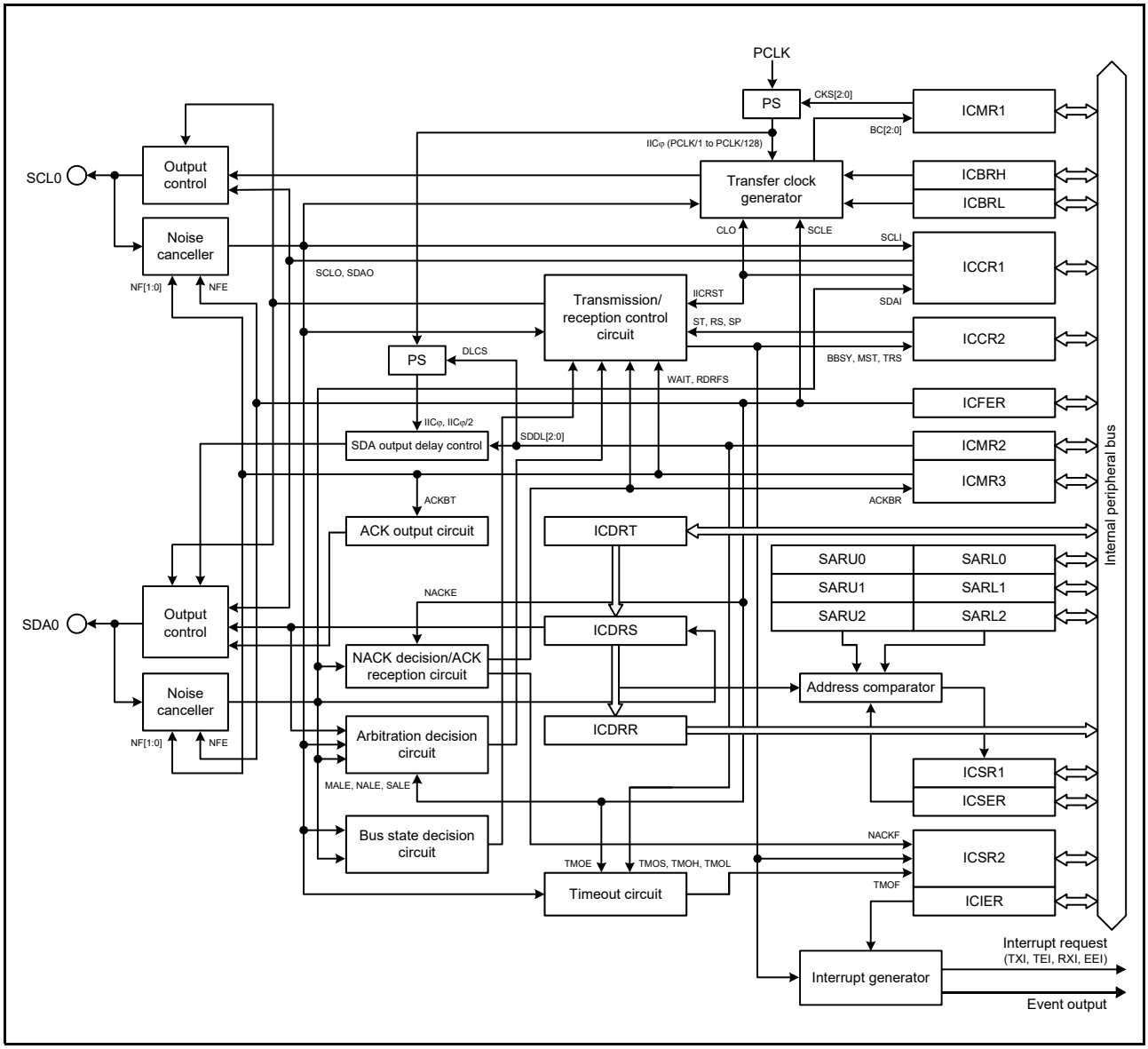

Figure 29.1 RIIC Block Diagram

The logic levels of the input signals for RIIC are CMOS when the I2C-bus is selected (ICMR3.SMBS bit is 0), or TTL when the SMBus is selected (ICMR3.SMBS bit is 1).

Table 29.2 RIIC Pin Configuration

Channel	Pin Name	I/O	Function
RIIC0	SCL0	I/O	RIIC0 serial clock I/O pin
	SDA0	I/O	RIIC0 serial data I/O pin

29.2 Register Descriptions

29.2.1 I2C-bus Control Register 1 (ICCR1)

Address(es): RIIC0.ICCR1 0008 8300h

	b7	b6	b5	b4	b3	b2	b1	b0
	ICE	IICRST	CLO	SOWP	SCLO	SDAO	SCLI	SDAI
Value after reset:	0	0	0	1	1	1	1	1

Bit	Symbol	Bit Name	Description	R/W
b0	SDAI	SDA Line Monitor	0: SDA0 line is low. 1: SDA0 line is high.	R
b1	SCLI	SCL Line Monitor	0: SCL0 line is low. 1: SCL0 line is high.	R
b2	SDAO	SDA Output Control/Monitor	• Read: 0: The RIIC has driven the SDA0 pin low. 1: The RIIC has released the SDA0 pin. • Write: 0: The RIIC drives the SDA0 pin low. 1: The RIIC releases the SDA0 pin. (High level output is achieved through an external pull-up resistor.)	R/W
b3	SCLO	SCL Output Control/Monitor	• Read: 0: The RIIC has driven the SCL0 pin low. 1: The RIIC has released the SCL0 pin. • Write: 0: The RIIC drives the SCL0 pin low. 1: The RIIC releases the SCL0 pin. (High level output is achieved through an external pull-up resistor.)	R/W
b4	SOWP	SCLO/SDAO Write Protect	0: SCLO and SDAO bits can be written. 1: SCLO and SDAO bits are protected. (This bit is read as 1.)	R/W
b5	CLO	Additional SCL Output	0: Does not output an additional SCL (default). 1: Outputs an additional SCL. (The CLO bit is cleared automatically after one clock pulse is output.)	R/W
b6	IICRST	I2C-bus Interface Internal Reset	0: Releases the RIIC reset or internal reset. 1: Initiates the RIIC reset or internal reset. (Clears the bit counter and the SCL0/SDA0 output latch)	R/W
b7	ICE	I2C-bus Interface Enable	0: Disable (SCL0 and SDA0 pins in inactive state) 1: Enable (SCL0 and SDA0 pins in active state) (Combined with the IICRST bit to select either RIIC or internal reset.)	R/W

SDAO Bit (SDA Output Control/Monitor) and SCLO Bit (SCL Output Control/Monitor)

These bits are used to directly control the SDA0 and SCL0 signals output from the RIIC.

When writing to these bits, also write 0 to the SOWP bit.

The result of setting these bits is input to the RIIC via the input buffer. When slave mode is selected, a start condition may be detected and the bus may be released depending on the bit settings.

Do not rewrite these bits during a start condition, stop condition, restart condition, or during transmission or reception. Operation after rewriting under the above conditions is not guaranteed.

When reading these bits, the state of signals output from the RIIC can be read.

CLO Bit (Additional SCL Output)

This bit is used to output an additional SCL for debugging or error processing.
Normally, set the bit to 0. Setting the bit to 1 in a normal communication state causes a communication error.
For details on this function, refer to section 29.11.2, Additional SCL Output Function.

IICRST Bit (I2C-bus Interface Internal Reset)

This bit is used to reset the internal states of the RIIC.
Setting this bit to 1 initiates an RIIC reset or internal reset.
Whether an RIIC reset or internal reset is initiated is determined according to the combination with the ICE bit. Table 29.3 lists the resets of the RIIC.
The RIIC reset initializes all registers and internal states of the RIIC, and the internal reset initializes the bit counter (ICMR1.BC[2:0] bits), the I2C-bus shift register (ICDRS), and the I2C-bus status registers (ICSR1 and ICSR2) as well as the internal states of the RIIC. For the reset conditions for each register, refer to section 29.14, Initialization of Registers and Functions When a Reset is Applied or a Condition is Detected.
An internal reset initiated with the IICRST bit set to 1 during operation (with the ICE bit set to 1) resets the internal states of the RIIC without initializing the port settings and the control and setting registers of the RIIC when the bus or RIIC hangs up due to a communication error.
If the RIIC hangs up in a low level output state, resetting the internal states cancels the low level output state and releases the bus with the SCL0 pin and SDA0 pin at a high impedance.

Note: If an internal reset is initiated using the IICRST bit for a bus hang-up occurred during communication with the master device in slave mode, the states may become different between the slave device and the master device (due to the difference in the bit counter information). For this reason, do not initiate an internal reset in slave mode, but initiate restoration processing from the master device. If it is necessary to perform an internal reset in slave mode, perform it during bus free state. If an internal reset is necessary because the RIIC has hung with the SCL0 line in a low level output state in slave mode, initiate an internal reset and then generate a restart condition from the master device or resume communications from the start condition after having generated a stop condition. If communication is restarted by initiating a reset solely in the slave device without generating a start condition or restart condition from the master device, synchronization will be lost because the master and slave devices operate asynchronously.

Table 29.3 RIIC Resets

IICRST	ICE	State	Specifications
1	0	RIIC reset	Resets all registers and internal states of the RIIC.
	1	Internal reset	Resets the ICMR1.BC[2:0] bits, registers ICSR1, ICSR2, and ICDRS, and the internal states of the RIIC.

ICE Bit (I2C-bus Interface Enable)

This bit selects the active or inactive state of the SCL0 and SDA0 pins. It can also be combined with the IICRST bit to initiate two types of resets. See Table 29.3, RIIC Resets, for the types of resets.
Set the ICE bit to 1 when using the RIIC. The SCL0 and SDA0 pins are placed in the active state when the ICE bit is set to 1.
Set the ICE bit to 0 when the RIIC is not to be used. The SCL0 and SDA0 pins are placed in the inactive state when the ICE bit is set to 0. Do not assign the SCL0 or SDA0 pin to the RIIC when setting up the multi-function pin controller (MPC). Note that the slave address comparison operation is carried out if the pins are assigned to the RIIC.

29.2.2 I2C-bus Control Register 2 (ICCR2)

Address(es): RIIC0.ICCR2 0008 8301h

	b7	b6	b5	b4	b3	b2	b1	b0
	BBSY	MST	TRS	—	SP	RS	ST	—
Value after reset:	0	0	0	0	0	0	0	0

Bit	Symbol	Bit Name	Description	R/W
b0	—	Reserved	This bit is read as 0. The write value should be 0.	R/W
b1	ST	Start Condition Generation Request	0: Does not request to generate a start condition. 1: Requests to generate a start condition.	R/W
b2	RS	Restart Condition Generation Request	0: Does not request to generate a restart condition. 1: Requests to generate a restart condition.	R/W
b3	SP	Stop Condition Generation Request	0: Does not request to generate a stop condition. 1: Requests to generate a stop condition.	R/W
b4	—	Reserved	This bit is read as 0. The write value should be 0.	R/W
b5	TRS	Transmit/Receive Mode	0: Receive mode 1: Transmit mode	R/W*1
b6	MST	Master/Slave Mode	0: Slave mode 1: Master mode	R/W*1
b7	BBSY	Bus Busy Detection Flag	0: The I2C-bus is released (bus free state). 1: The I2C-bus is occupied (bus busy state).	R

Note 1. When the ICMR1.MTWP bit is set to 1, bits MST and TRS can be written to.

ST Bit (Start Condition Generation Request)

This bit is used to request transition to master mode and generation of a start condition.

When this bit is set to 1 to request to generate a start condition, a start condition is generated when the BBSY flag is set to 0 (bus free state).

For details on the start condition generation, refer to section 29.10, Start Condition/Restart Condition/Stop Condition Generating Function.

[Setting condition]

- When 1 is written to the ST bit

[Clearing conditions]

- When 0 is written to the ST bit
- When a start condition has been generated (a start condition is detected)
- When the ICSR2.AL (arbitration-lost) flag is set to 1
- When 1 is written to the ICCR1.IICRST bit to apply an RIIC reset or an internal reset

Note: Set the ST bit to 1 (requests to generate a start condition) when the BBSY flag is set to 0 (bus free state). Note that arbitration may be lost due to a start condition generation error if the ST bit is set to 1 (requests to generate a start condition) when the BBSY flag is set to 1 (bus busy state).

RS Bit (Restart Condition Generation Request)

This bit is used to request that a restart condition be generated in master mode.
When this bit is set to 1 to request to generate a restart condition, a restart condition is generated when the BBSY flag is set to 1 (bus busy state) and the MST bit is set to 1 (master mode).
For details on the restart condition generation, refer to section 29.10, Start Condition/Restart Condition/Stop Condition Generating Function.
[Setting condition]

- When 1 is written to the RS bit with the ICCR2.BBSY flag set to 1

[Clearing conditions]

- When 0 is written to the RS bit
- When a restart condition has been generated (a start condition is detected)
- When the ICSR2.AL (arbitration-lost) flag is set to 1
- When 1 is written to the ICCR1.IICRST bit to apply an RIIC reset or an internal reset

Note: Do not set the RS bit to 1 while generating a stop condition.
Note: If 1 (requests to generate a restart condition) is written to the RS bit in slave mode, the restart condition is not generated but the RS bit remains set to 1. If the operating mode changes to master mode with the bit not being cleared, note that the restart condition may be generated.

SP Bit (Stop Condition Generation Request)

This bit is used to request that a stop condition be generated in master mode.
When this bit is set to 1 to request to generate a stop condition, a stop condition is generated when the BBSY flag is set to 1 (bus busy state) and the MST bit is set to 1 (master mode).
For details on the stop condition generation, refer to section 29.10, Start Condition/Restart Condition/Stop Condition Generating Function.
[Setting condition]

- When 1 is written to the SP bit with both the BBSY flag and the ICCR2.MST bit set to 1

[Clearing conditions]

- When 0 is written to the SP bit
- When a stop condition has been generated (a stop condition is detected)
- When the ICSR2.AL (arbitration-lost) flag is set to 1
- When a start condition and a restart condition are detected
- When 1 is written to the ICCR1.IICRST bit to apply an RIIC reset or an internal reset

Note: Writing to the SP bit is not possible while the setting of the BBSY flag is 0 (bus free state).
Note: Do not set the SP bit to 1 while a restart condition is being generated.

TRS Bit (Transmit/Receive Mode)

This bit indicates transmit or receive mode.
The RIIC is in receive mode when the TRS bit is set to 0 and is in transmit mode when the bit is set to 1. Combination of this bit and the MST bit indicates the operating mode of the RIIC.
The value of the TRS bit is automatically changed to 1 for transmission or 0 for reception in response to the generation or detection of a start condition and setting of the R/W# bit. Although writing to the TRS bit is possible when the ICMR1.MTWP bit is set to 1, writing to this bit is not necessary during normal usage.
[Setting conditions]

- When a start condition is generated normally according to the start condition generation request (when a start condition is detected with the ST bit set to 1)
- When a restart condition is generated normally according to the restart condition generation request (when a restart condition is detected with the RS bit set to 1)
- When the R/W# bit added to the slave address is set to 0 in master mode
- When the address received in slave mode matches the address enabled in the ICSER register, with the R/W# bit set to 1
- When 1 is written to the TRS bit with the ICMR1.MTWP bit set to 1

[Clearing conditions]

- When a stop condition is detected
- The ICSR2.AL (arbitration-lost) flag being set to 1
- In master mode, reception of a slave address to which an R/W# bit with the value 1 is appended
- In slave mode, a match between the received address and the address enabled in the ICSER register when the value of the received R/W# bit is 0 (including cases where the received address is the general call address)
- In slave mode, a restart condition is detected (that is, a start condition is detected while the ICCR2.BBSY flag is 1 and the ICCR2.MST bit is 0)
- When 0 is written to the TRS bit with the ICMR1.MTWP bit set to 1
- When 1 is written to the ICCR1.IICRST bit to apply an RIIC reset or an internal reset

MST Bit (Master/Slave Mode)

This bit indicates master or slave mode.
The RIIC is in slave mode when the MST bit is set to 0 and is in master mode when the bit is set to 1. Combination of this bit and the TRS bit indicates the operating mode of the RIIC.
The value of the MST bit is automatically changed to 1 for master mode or 0 for slave mode by generating of a start condition and generating or detection of a stop condition, etc. Although writing to the MST bit is possible when the ICMR1.MTWP bit is set to 1, writing to this bit is not necessary during normal usage.
[Setting conditions]

- When a start condition is generated normally according to the start condition generation request (when a start condition is detected with the ST bit set to 1)
- When 1 is written to the MST bit with the ICMR1.MTWP bit set to 1

[Clearing conditions]

- When a stop condition is detected
- When the ICSR2.AL (arbitration-lost) flag is set to 1
- When 0 is written to the MST bit with the ICMR1.MTWP bit set to 1
- When 1 is written to the ICCR1.IICRST bit to apply an RIIC reset or an internal reset

BBSY Flag (Bus Busy Detection Flag)

The BBSY flag indicates whether the I2C-bus is occupied (bus busy state) or released (bus free state).
This bit is set to 1 when the SDA0 line changes from high to low under the condition of SCL0 line = high, assuming that a start condition has been generated.
The RIIC recognizes the SDA0 line changing from low to high while the SCL0 line is high as generation of the stop condition. After that, this flag becomes 0 if the RIIC does not detect a start condition during the bus free time (the period set in the ICBRL register).
[Setting condition]

- When a start condition is detected

[Clearing conditions]

- When the bus free time (specified in the ICBRL register) start condition is not detected after detecting a stop condition
- When 1 is written to the ICCR1.IICRST bit with the ICCR1.ICE bit set to 0 (RIIC reset)

29.2.3 I2C-bus Mode Register 1 (ICMR1)

Address(es): RIIC0.ICMR1 0008 8302h

	b7	b6	b5	b4	b3	b2	b1	b0
	MTWP	CKS[2:0]			BCWP	BC[2:0]		
Value after reset:	0	0	0	0	1	0	0	0

Bit	Symbol	Bit Name	Description	R/W
b2 to b0	BC[2:0]	Bit Counter	b2 b0 0 0 0: 9 bits 0 0 1: 2 bits 0 1 0: 3 bits 0 1 1: 4 bits 1 0 0: 5 bits 1 0 1: 6 bits 1 1 0: 7 bits 1 1 1: 8 bits	R/W*1
b3	BCWP	BC Write Protect	0: Enables a value to be written in the BC[2:0] bits. (This bit is read as 1.)	R/W*1
b6 to b4	CKS[2:0]	Internal Reference Clock Select	Select the internal reference clock (IICφ) source for the RIIC. b6 b4 0 0 0: PCLK/1 0 0 1: PCLK/2 0 1 0: PCLK/4 0 1 1: PCLK/8 1 0 0: PCLK/16 1 0 1: PCLK/32 1 1 0: PCLK/64 1 1 1: PCLK/128	R/W
b7	MTWP	MST/TRS Write Protect	0: Disables writing to the ICCR2.MST and TRS bits. 1: Enables writing to the ICCR2.MST and TRS bits.	R/W

Note 1. Rewrite the BC[2:0] bits and set the BCWP bit to 0 at the same time.

BC[2:0] Bits (Bit Counter)

These bits function as a counter that indicates the number of bits remaining to be transferred at the detection of a rising edge on the SCL0 line. Although these bits are writable and readable, it is not necessary to access these bits under normal conditions.

To write to these bits, specify the number of bits to be transferred plus one (data is transferred with an additional acknowledgment bit) between transferred bytes when the SCL0 line is low.

The values of the BC[2:0] bits return to 000b at the end of a data transfer including the acknowledgment bit or when a start condition including a restart condition is detected.

29.2.4 I2C-bus Mode Register 2 (ICMR2)

Address(es): RIIC0.ICMR2 0008 8303h

	b7	b6	b5	b4	b3	b2	b1	b0
	DLCS	SDDL[2:0]			—	TMOH	TMOL	TMOS
Value after reset:	0	0	0	0	0	1	1	0

Bit	Symbol	Bit Name	Description	R/W
b0	TMOS	Timeout Detection Time Select	0: Long mode is selected. 1: Short mode is selected.	R/W
b1	TMOL	Timeout L Count Control	0: Count-up is disabled while the SCL0 line is low. 1: Count-up is enabled while the SCL0 line is low.	R/W
b2	TMOH	Timeout H Count Control	0: Count-up is disabled while the SCL0 line is high. 1: Count-up is enabled while the SCL0 line is high.	R/W
b3	—	Reserved	This bit is read as 0. The write value should be 0.	R/W
b6 to b4	SDDL[2:0]	SDA Output Delay Counter	• When ICMR2.DLCS bit is 0 (IICφ) b6 b4 0 0 0: No output delay 0 0 1: 1 IICφ cycle 0 1 0: 2 IICφ cycles 0 1 1: 3 IICφ cycles 1 0 0: 4 IICφ cycles 1 0 1: 5 IICφ cycles 1 1 0: 6 IICφ cycles 1 1 1: 7 IICφ cycles • When ICMR2.DLCS bit is 1 (IICφ/2) b6 b4 0 0 0: No output delay 0 0 1: 1 or 2 IICφ cycles 0 1 0: 3 or 4 IICφ cycles 0 1 1: 5 or 6 IICφ cycles 1 0 0: 7 or 8 IICφ cycles 1 0 1: 9 or 10 IICφ cycles 1 1 0: 11 or 12 IICφ cycles 1 1 1: 13 or 14 IICφ cycles	R/W
b7	DLCS	SDA Output Delay Clock Source Select	0: The internal reference clock (IICφ) is selected as the clock source of the SDA output delay counter. 1: The internal reference clock divided by 2 (IICφ/2) is selected as the clock source of the SDA output delay counter.*1	R/W

Note 1. The DLCS bit setting of 1 (IICφ/2) only becomes valid when SCL pin is low. When SCL pin is high, the DLCS bit setting of 1 becomes invalid and the clock source becomes the internal reference clock (IICφ).

TMOS Bit (Timeout Detection Time Select)

This bit is used to select long mode or short mode for the timeout detection time when the timeout function is enabled (ICFER.TMOE bit is 1). When this bit is set to 0, long mode is selected. When this bit is set to 1, short mode is selected. In long mode, the timeout detection internal counter functions as a 16-bit counter. In short mode, the counter functions as a 14-bit counter. While the SCL0 line is in the state that enables this counter as specified by bits TMOH and TMOL, the counter counts up in synchronization with the internal reference clock (IICφ) as a count source.

For details on the timeout function, refer to section 29.11.1, Timeout Function.

TMOL Bit (Timeout L Count Control)

This bit is used to enable or disable the internal counter of the timeout function to count up while the SCL0 line is held low when the timeout function is enabled (ICFER.TMOE bit is 1).

TMOH Bit (Timeout H Count Control)

This bit is used to enable or disable the internal counter of the timeout function to count up while the SCL0 line is held high when the timeout function is enabled (ICFER.TMOE bit is 1).

SDDL[2:0] Bits (SDA Output Delay Counter)

The SDA output can be delayed by the SDDL[2:0] setting. This counter works with the clock source selected by the DLCS bit. The setting of this function can be used for all types of SDA output, including the transmission of the acknowledgment bit.

Set the SDA output delay time to meet the I2C-bus specification (within the data valid time/data valid acknowledge time*1) or the SMBus specification (more than the data hold time (300 ns) and less than "clock low period – data setup time (250 ns)"). Note that, if a value outside the specification is set, communication with communication devices may malfunction or it may seemingly become a start condition or stop condition depending on the bus state.

For details on this function, refer to section 29.5, SDA Output Delay Function.

Note 1. Data valid time/data valid acknowledge time
3,450 ns (up to 100 kbps: Standard-mode (Sm))
900 ns (up to 400 kbps: Fast-mode (Fm))

29.2.5 I2C-bus Mode Register 3 (ICMR3)

Address(es): RIIC0.ICMR3 0008 8304h

	b7	b6	b5	b4	b3	b2	b1	b0
	SMBS	WAIT	RDRFS	ACKWP	ACKBT	ACKBR	NF[1:0]	
Value after reset:	0	0	0	0	0	0	0	0

Bit	Symbol	Bit Name	Description	R/W
b1, b0	NF[1:0]	Noise Filter Stage Select	b1 b0 0 0: Noise of up to one IICφ cycle is filtered out (single-stage filter). 0 1: Noise of up to two IICφ cycles is filtered out (2-stage filter). 1 0: Noise of up to three IICφ cycles is filtered out (3-stage filter). 1 1: Noise of up to four IICφ cycles is filtered out (4-stage filter).	R/W
b2	ACKBR	Received Acknowledge	0: 0 is received as the acknowledgment bit (ACK reception). 1: 1 is received as the acknowledgment bit (NACK reception).	R
b3	ACKBT	Transmit Acknowledge	0: 0 is to be sent as the acknowledgment bit (ACK transmission). 1: 1 is to be sent as the acknowledgment bit (NACK transmission).	R/W*1
b4	ACKWP	ACKBT Write Protect	0: Modification of the ACKBT bit is disabled. 1: Modification of the ACKBT bit is enabled.	R/W*1
b5	RDRFS	RDRF Flag Set Timing Select	0: The RDRF flag is set at the rising edge of the ninth SCL. (The SCL0 line is not held low at the falling edge of the eighth clock pulse.) 1: The RDRF flag is set at the rising edge of the eighth SCL. (The SCL0 line is held low at the falling edge of the eighth clock pulse.) Low-hold is released by writing a value to the ACKBT bit.	R/W*2
b6	WAIT	WAIT	0: No WAIT (The period between ninth clock pulse and first clock pulse is not held low.) 1: WAIT (The period between ninth clock pulse and first clock pulse is held low.) Low-hold is released by reading the ICDRR register.	R/W*2
b7	SMBS	SMBus/I2C-bus Select	0: The I2C-bus is selected. 1: The SMBus is selected.	R/W

Note 1. Write to the ACKBT bit only while the ACKWP bit is already 1. If it is attempted to write 1 to both the ACKWP and ACKBT bits at the same time, the ACKBT bit will not be set to 1.

Note 2. The WAIT and RDRFS bits are valid only in receive mode (invalid in transmit mode).

NF[1:0] Bits (Noise Filter Stage Select)

These bits are used to select the number of stages in the digital noise filter.

For details on the digital noise filter function, refer to section 29.6, Digital Noise Filters.

Note: Set the noise range to be filtered out by the noise filter within a range less than the SCL0 line high period or low period. If the noise filter width is set to a value of [the shorter one of either SCL high width or SCL low width] – 1.5 × t_{IICcyc} (cycle time of internal reference clock (IICφ)) or a greater value, the serial clock is regarded as noise by the noise filter function of the RIIC, which may prevent the RIIC from operating normally.

ACKBR Bit (Received Acknowledge)

This bit is used to store the value of the acknowledgment bit received from the receiver in transmit mode.
[Setting condition]

- When 1 is received as the acknowledgment bit with the ICCR2.TRS bit set to 1

[Clearing conditions]

- When 0 is received as the acknowledgment bit with the ICCR2.TRS bit set to 1
- When 1 is written to the ICCR1.IICRST bit while the ICCR1.ICE bit is 0 (RIIC reset)

ACKBT Bit (Transmit Acknowledge)

This bit is used to set the bit to be sent at the acknowledgment timing in receive mode.
[Setting condition]

- When 1 is written to this bit with the ACKWP bit set to 1

[Clearing conditions]

- When 0 is written to this bit with the ACKWP bit set to 1
- When stop condition generation is detected (when a stop condition is detected with the ICCR2.SP bit set to 1)
- When 1 is written to the ICCR1.IICRST bit while the ICCR1.ICE bit is 0 (RIIC reset)

ACKWP Bit (ACKBT Write Protect)

This bit is used to control the modification of the ACKBT bit.

RDRFS Bit (RDRF Flag Set Timing Select)

This bit is used to select the RDRF flag set timing in receive mode and also to select whether to hold the SCL0 line low at the falling edge of the eighth SCL.
When the RDRFS bit is 0, the SCL0 line is not held low at the falling edge of the eighth SCL, and the RDRF flag is set to 1 at the rising edge of the ninth SCL.
When the RDRFS bit is 1, the RDRF flag is set to 1 at the rising edge of the eighth SCL and the SCL0 line is held low at the falling edge of the eighth SCL. The low-hold of the SCL0 line is released by writing a value to the ACKBT bit.
After data is received with this setting, the SCL0 line is automatically held low before the acknowledgment bit is sent.
This enables processing to send ACK (ACKBT bit is 0) or NACK (ACKBT bit is 1) according to receive data.

WAIT Bit (WAIT)

This bit is used to control whether to hold the period between the ninth SCL and the first SCL low until the I2C-bus receive data register (ICDRR) is completely read each time single-byte data is received in receive mode.
When the WAIT bit is 0, the receive operation is continued without holding the period between the ninth and the first SCL low. When both the RDRFS and WAIT bits are 0, continuous receive operation is enabled with the double buffer.
When the WAIT bit is 1, the SCL0 line is held low from the falling edge of the ninth SCL until the ICDRR register value is read each time single-byte data is received. This enables receive operation in byte units.

Note: When the value of the WAIT bit is to be read, be sure to read the ICDRR register beforehand.

SMBS Bit (SMBus/I2C-bus Select)

Setting this bit to 1 selects the SMBus and enables the ICSER.HOAE bit.

29.2.6 I2C-bus Function Enable Register (ICFER)

Address(es): RIIC0.ICFER 0008 8305h

	b7	b6	b5	b4	b3	b2	b1	b0
	—	SCLE	NFE	NACKE	SALE	NALE	MALE	TMOE
Value after reset:	0	1	1	1	0	0	1	0

Bit	Symbol	Bit Name	Description	R/W
b0	TMOE	Timeout Function Enable	0: The timeout function is disabled. 1: The timeout function is enabled.	R/W
b1	MALE	Master Arbitration-Lost Detection Enable	0: Master arbitration-lost detection is disabled. (Disables the arbitration-lost detection function and does not clear the ICCR2.MST and TRS bits automatically when arbitration is lost.) 1: Master arbitration-lost detection is enabled. (Enables the arbitration-lost detection function and clears the ICCR2.MST and TRS bits automatically when arbitration is lost.)	R/W
b2	NALE	NACK Transmission Arbitration-Lost Detection Enable	0: NACK transmission arbitration-lost detection is disabled. 1: NACK transmission arbitration-lost detection is enabled.	R/W
b3	SALE	Slave Arbitration-Lost Detection Enable	0: Slave arbitration-lost detection is disabled. 1: Slave arbitration-lost detection is enabled.	R/W
b4	NACKE	NACK Reception Transfer Suspension Enable	0: Transfer operation is not suspended during NACK reception (transfer suspension disabled). 1: Transfer operation is suspended during NACK reception (transfer suspension enabled).	R/W
b5	NFE	Digital Noise Filter Enable	0: Digital noise filters are not used. 1: Digital noise filters are used.	R/W
b6	SCLE	SCL Synchronization Enable	0: SCL synchronization is disabled. 1: SCL synchronization is enabled.	R/W
b7	—	Reserved	This bit is read as 0. The write value should be 0.	R/W

TMOE Bit (Timeout Function Enable)

This bit is used to enable or disable the timeout function.

For details on the timeout function, refer to section 29.11.1, Timeout Function.

MALE Bit (Master Arbitration-Lost Detection Enable)

This bit is used to specify whether to use the arbitration-lost detection function in master mode. Normally, set this bit to 1.

NALE Bit (NACK Transmission Arbitration-Lost Detection Enable)

This bit is used to specify whether to cause arbitration to be lost when ACK is detected during transmission of NACK in receive mode (such as when slaves with the same address exist on the bus or when two or more masters select the same slave device simultaneously with different number of receive bytes).

SALE Bit (Slave Arbitration-Lost Detection Enable)

This bit is used to specify whether to cause arbitration to be lost when a value different from the value being transmitted is detected on the bus in slave transmit mode (such as when slaves with the same address exist on the bus or when a mismatch with the transmit data occurs due to noise).

NACKE Bit (NACK Reception Transfer Suspension Enable)

This bit is used to specify whether to continue or discontinue the data transfer when NACK is received in transmit mode. Normally, set this bit to 1.
When NACK is received with the NACKE bit set to 1, the next transfer operation is suspended.
When the NACKE bit is 0, the next transfer operation is continued regardless of the value of the received acknowledgment bit.
For details on the NACK reception transfer suspension function, refer to section 29.8.2, NACK Reception Transfer Suspension Function.

SCLE Bit (SCL Synchronization Enable)

This bit is used to specify whether to the SCL output is to be synchronized with the SCL input. Normally, set this bit to 1.
When the SCLE bit is set to 0 (SCL synchronization is disabled), the RIIC does not synchronize the SCL output with the SCL input. In this setting, the RIIC outputs the clock with the transfer rate set in registers ICBRH and ICBRL regardless of the SCL0 line state. For this reason, if the load of the I2C-bus line is much larger than the specification value or if the SCL output overlaps in multiple masters, the short-cycle SCL that does not meet the specification may be output. When the SCL synchronization is not used, it also affects the generation of a start condition, restart condition, and stop condition, and the continuous output of additional SCL.
This bit must not be set to 0 except for checking the output of the set transfer rate.

29.2.7 I2C-bus Status Enable Register (ICSER)

Address(es): RIIC0.ICSER 0008 8306h

	b7	b6	b5	b4	b3	b2	b1	b0
	HOAE	—	DIDE	—	GCAE	SAR2E	SAR1E	SAR0E
Value after reset:	0	0	0	0	1	0	0	1

Bit	Symbol	Bit Name	Description	R/W
b0	SAR0E	Slave Address Register 0 Enable	0: Slave address in registers SARL0 and SARU0 is disabled. 1: Slave address in registers SARL0 and SARU0 is enabled.	R/W
b1	SAR1E	Slave Address Register 1 Enable	0: Slave address in registers SARL1 and SARU1 is disabled. 1: Slave address in registers SARL1 and SARU1 is enabled.	R/W
b2	SAR2E	Slave Address Register 2 Enable	0: Slave address in registers SARL2 and SARU2 is disabled. 1: Slave address in registers SARL2 and SARU2 is enabled.	R/W
b3	GCAE	General Call Address Enable	0: General call address detection is disabled. 1: General call address detection is enabled.	R/W
b4	—	Reserved	This bit is read as 0. The write value should be 0.	R/W
b5	DIDE	Device-ID Address Detection Enable	0: Device-ID address detection is disabled. 1: Device-ID address detection is enabled.	R/W
b6	—	Reserved	This bit is read as 0. The write value should be 0.	R/W
b7	HOAE	Host Address Enable	0: Host address detection is disabled. 1: Host address detection is enabled.	R/W

SARyE Bit (Slave Address Register y Enable) (y = 0 to 2)

This bit is used to enable or disable the slave address set in registers SARLy and SARUy.
When this bit is set to 1, the slave address set in registers SARLy and SARUy is enabled and is compared with the received slave address.
When this bit is set to 0, the slave address set in registers SARLy and SARUy is disabled and is ignored even if it matches the received slave address.

GCAE Bit (General Call Address Enable)

This bit is used to specify whether to ignore the general call address (0000 000b + 0 (write): All 0) when it is received.
When this bit is set to 1, if the received slave address matches the general call address, the RIIC recognizes the received slave address as the general call address independently of the slave addresses set in registers SARLy and SARUy (y = 0 to 2) and performs data receive operation.
When this bit is set to 0, the received slave address is ignored even if it matches the general call address.

DIDE Bit (Device-ID Address Detection Enable)

This bit is used to specify whether to recognize and execute the device-ID address when a device ID (1111 100b) is received in the first byte after a start condition or restart condition is detected.
When this bit is set to 1, if the received first byte matches the device ID, the RIIC recognizes that the device-ID address has been received. When the following R/W# bit is 0 (write), the RIIC recognizes the second and the following bytes as slave addresses and continues the receive operation.
When this bit is set to 0, the RIIC ignores the received first byte even if it matches the device ID address and recognizes the first byte as a normal slave address.
For details on the device-ID address detection, refer to section 29.7.3, Device-ID Address Detection.

HOAE Bit (Host Address Enable)

This bit is used to specify whether to ignore received host address (0001 000b) when the ICMR3.SMBS bit is 1.
When this bit is set to 1 while the ICMR3.SMBS bit is 1, if the received slave address matches the host address, the RIIC recognizes the received slave address as the host address independently of the slave addresses set in registers SARLy and SARUy (y = 0 to 2) and performs the receive operation.
When the ICMR3.SMBS bit or the HOAE bit is set to 0, the received slave address is ignored even if it matches the host address.

29.2.8 I2C-bus Interrupt Enable Register (ICIER)

Address(es): RIIC0.ICIER 0008 8307h

	b7	b6	b5	b4	b3	b2	b1	b0
	TIE	TEIE	RIE	NAKIE	SPIE	STIE	ALIE	TMOIE
Value after reset:	0	0	0	0	0	0	0	0

Bit	Symbol	Bit Name	Description	R/W
b0	TMOIE	Timeout Interrupt Request Enable	0: Timeout interrupt (TMOI) request is disabled. 1: Timeout interrupt (TMOI) request is enabled.	R/W
b1	ALIE	Arbitration-Lost Interrupt Request Enable	0: Arbitration-lost interrupt (ALI) request is disabled. 1: Arbitration-lost interrupt (ALI) request is enabled.	R/W
b2	STIE	Start Condition Detection Interrupt Request Enable	0: Start condition detection interrupt (STI) request is disabled. 1: Start condition detection interrupt (STI) request is enabled.	R/W
b3	SPIE	Stop Condition Detection Interrupt Request Enable	0: Stop condition detection interrupt (SPI) request is disabled. 1: Stop condition detection interrupt (SPI) request is enabled.	R/W
b4	NAKIE	NACK Reception Interrupt Request Enable	0: NACK reception interrupt (NAKI) request is disabled. 1: NACK reception interrupt (NAKI) request is enabled.	R/W
b5	RIE	Receive Data Full Interrupt Request Enable	0: Receive data full interrupt (RXI) request is disabled. 1: Receive data full interrupt (RXI) request is enabled.	R/W
b6	TEIE	Transmission End Interrupt Request Enable	0: Transmission end interrupt (TEI) request is disabled. 1: Transmission end interrupt (TEI) request is enabled.	R/W
b7	TIE	Transmit Data Empty Interrupt Request Enable	0: Transmit data empty interrupt (TXI) request is disabled. 1: Transmit data empty interrupt (TXI) request is enabled.	R/W

TMOIE Bit (Timeout Interrupt Request Enable)

This bit is used to enable or disable timeout interrupt (TMOI) requests when the ICSR2.TMOF flag is set to 1. A TMOI interrupt request is canceled by setting the TMOF flag or the TMOIE bit to 0.

ALIE Bit (Arbitration-Lost Interrupt Request Enable)

This bit is used to enable or disable arbitration-lost interrupt (ALI) requests when the ICSR2.AL flag is set to 1. An ALI interrupt request is canceled by setting the AL flag or the ALIE bit to 0.

STIE Bit (Start Condition Detection Interrupt Request Enable)

This bit is used to enable or disable start condition detection interrupt (STI) requests when the ICSR2.START flag is set to 1. An STI interrupt request is canceled by setting the START flag or the STIE bit to 0.

SPIE Bit (Stop Condition Detection Interrupt Request Enable)

This bit is used to enable or disable stop condition detection interrupt (SPI) requests when the ICSR2.STOP flag is set to 1. An SPI interrupt request is canceled by setting the STOP flag or the SPIE bit to 0.

NAKIE Bit (NACK Reception Interrupt Request Enable)

This bit is used to enable or disable NACK reception interrupt (NAKI) requests when the ICSR2.NACKF flag is set to 1. An NAKI interrupt request is canceled by setting the NACKF flag or the NAKIE bit to 0.

RIE Bit (Receive Data Full Interrupt Request Enable)

This bit is used to enable or disable receive data full interrupt (RXI) requests when the ICSR2.RDRF flag is set to 1.

TEIE Bit (Transmission End Interrupt Request Enable)

This bit is used to enable or disable transmission end interrupt (TEI) requests when the ICSR2.TEND flag is set to 1. An TEI interrupt request is canceled by setting the TEND flag or the TEIE bit to 0.

TIE Bit (Transmit Data Empty Interrupt Request Enable)

This bit is used to enable or disable transmit data empty interrupt (TXI) requests when the ICSR2.TDRE flag is set to 1.

29.2.9 I2C-bus Status Register 1 (ICSR1)

Address(es): RIIC0.ICSR1 0008 8308h

	b7	b6	b5	b4	b3	b2	b1	b0
	HOA	—	DID	—	GCA	AAS2	AAS1	AAS0
Value after reset:	0	0	0	0	0	0	0	0

Bit	Symbol	Bit Name	Description	R/W
b0	AAS0	Slave Address 0 Detection Flag	0: Slave address 0 is not detected. 1: Slave address 0 is detected.	R/(W) *1
b1	AAS1	Slave Address 1 Detection Flag	0: Slave address 1 is not detected. 1: Slave address 1 is detected.	R/(W) *1
b2	AAS2	Slave Address 2 Detection Flag	0: Slave address 2 is not detected. 1: Slave address 2 is detected.	R/(W) *1
b3	GCA	General Call Address Detection Flag	0: General call address is not detected. 1: General call address is detected.	R/(W) *1
b4	—	Reserved	This bit is read as 0. The write value should be 0.	R/W
b5	DID	Device-ID Address Detection Flag	0: Device-ID command is not detected. 1: Device-ID command is detected. • This bit is set to 1 when the first byte received immediately after a start condition is detected matches a value of (device ID (1111 100b) + 0 (write)).	R/(W) *1
b6	—	Reserved	This bit is read as 0. The write value should be 0.	R/W
b7	HOA	Host Address Detection Flag	0: Host address is not detected. 1: Host address is detected. • This bit is set to 1 when the received slave address matches the host address (0001 000b).	R/(W) *1

Note 1. Only 0 can be written to clear the flag.

AASy Flag (Slave Address y Detection Flag) (y = 0 to 2)

[Setting conditions]

For 7-bit address format: SARUy.FS bit = 0

- When the received slave address matches the SARLy.SVA[6:0] bits value with the ICSER.SARyE bit set to 1 (slave address y detection enabled)
  This flag is set to 1 at the rising edge of the ninth SCL in the first byte.

For 10-bit address format: SARUy.FS bit = 1

- When the received slave address matches a value of (11110b + SARUy.SVA[1:0] bits) and the following address matches the SARLy value with the ICSER.SARyE bit set to 1 (slave address y detection enabled)
  This flag is set to 1 at the rising edge of the ninth SCL in the second byte.

[Clearing conditions]

- When 0 is written to the AASy flag after reading the AASy flag to be 1
- When a stop condition is detected
- When 1 is written to the ICCR1.IICRST bit to apply an RIIC reset or an internal reset

For 7-bit address format: SARUy.FS bit = 0

- When the received slave address does not match the SARLy.SVA[6:0] bits value with the ICSER.SARyE bit set to 1 (slave address y detection enabled)
  This flag is set to 0 at the rising edge of the ninth SCL in the first byte.

For 10-bit address format: SARUy.FS bit = 1

- When the received slave address does not match a value of (11110b + SARUy.SVA[1:0] bits) with the ICSER.SARyE bit set to 1 (slave address y detection enabled)
  This flag is set to 0 at the rising edge of the ninth SCL in the first byte.
- When the received slave address matches a value of (11110b + SARUy.SVA[1:0] bits) and the following address does not match the SARLy value with the ICSER.SARyE bit set to 1 (slave address y detection enabled)
  This flag is set to 0 at the rising edge of the ninth SCL in the second byte.

GCA Flag (General Call Address Detection Flag)

[Setting condition]

- When the received slave address matches the general call address (0000 000b + 0 (write)) with the ICSER.GCAE bit set to 1 (general call address detection is enabled)
  This flag is set to 1 at the rising edge of the ninth SCL in the first byte.

[Clearing conditions]

- When 0 is written to the GCA flag after reading GCA flag to be 1
- When a stop condition is detected
- When the received slave address does not match the general call address (0000 000b + 0 (write)) with the ICSER.GCAE bit set to 1 (general call address detection is enabled)
  This flag is set to 0 at the rising edge of the ninth SCL in the first byte.
- When 1 is written to the ICCR1.IICRST bit to apply an RIIC reset or an internal reset

DID Flag (Device-ID Address Detection Flag)

[Setting condition]

- When the first byte received immediately after a start condition or restart condition is detected matches a value of (device ID (1111 100b) + 0 (write)) with the ICSER.DIDE bit set to 1 (device-ID address detection is enabled)
  This flag is set to 1 at the rising edge of the ninth SCL in the first byte.

[Clearing conditions]

- When 0 is written to the DID flag after reading DID flag to be 1
- When a stop condition is detected
- When the first byte received immediately after a start condition or restart condition is detected does not match a value of (device ID (1111 100b)) with the ICSER.DIDE bit set to 1 (device-ID address detection is enabled)
  This flag is set to 0 at the rising edge of the ninth SCL in the first byte.
- When the first byte received immediately after a start condition or restart condition is detected matches a value of (device ID (1111 100b) + 0 (write)) and the second byte does not match any of slave addresses 0 to 2 with the ICSER.DIDE bit set to 1 (device-ID address detection is enabled)
  This flag is set to 0 at the rising edge of the ninth SCL in the second byte.
- When 1 is written to the ICCR1.IICRST bit to apply an RIIC reset or an internal reset

HOA Flag (Host Address Detection Flag)

[Setting condition]

- When the received slave address matches the host address (0001 000b) with the ICSER.HOAE bit set to 1 (host address detection is enabled)
  This flag is set to 1 at the rising edge of the ninth SCL in the first byte.

[Clearing conditions]

- When 0 is written to the HOA flag after reading HOA flag to be 1
- When a stop condition is detected
- When the received slave address does not match the host address (0001 000b) with the ICSER.HOAE bit set to 1

(host address detection is enabled)
This flag is set to 0 at the rising edge of the ninth SCL in the first byte.

- When 1 is written to the ICCR1.IICRST bit to apply an RIIC reset or an internal reset

29.2.10 I2C-bus Status Register 2 (ICSR2)

Address(es): RIIC0.ICSR2 0008 8309h

	b7	b6	b5	b4	b3	b2	b1	b0
	TDRE	TEND	RDRF	NACKF	STOP	START	AL	TMOF
Value after reset:	0	0	0	0	0	0	0	0

Bit	Symbol	Bit Name	Description	R/W
b0	TMOF	Timeout Detection Flag	0: Timeout is not detected. 1: Timeout is detected.	R/(W) *1
b1	AL	Arbitration-Lost Flag	0: Arbitration is not lost. 1: Arbitration is lost.	R/(W) *1
b2	START	Start Condition Detection Flag	0: Start condition is not detected. 1: Start condition is detected.	R/(W) *1
b3	STOP	Stop Condition Detection Flag	0: Stop condition is not detected. 1: Stop condition is detected.	R/(W) *1
b4	NACKF	NACK Detection Flag	0: NACK is not detected. 1: NACK is detected.	R/(W) *1
b5	RDRF	Receive Data Full Flag	0: The ICDRR register contains no receive data. 1: The ICDRR register contains receive data.	R/(W) *1
b6	TEND	Transmission End Flag	0: Data is being transmitted. 1: Data has been transmitted.	R/(W) *1
b7	TDRE	Transmit Data Empty Flag	0: The ICDRT register contains transmit data. 1: The ICDRT register contains no transmit data.	R

Note 1. Only 0 can be written to clear the flag.

TMOF Flag (Timeout Detection Flag)

This flag is set to 1 when the RIIC recognizes timeout after the SCL0 line state remains unchanged for a certain period.

[Setting condition]

- When the SCL0 line state remains unchanged for the period specified by bits ICMR2.TMOH, TMOL, and TMOS while the ICFER.TMOE bit is 1 (the timeout function is enabled) in master mode or in slave mode and the received slave address matches.

[Clearing conditions]

- When 0 is written to the TMOF bit after reading TMOF = 1
- When 1 is written to the ICCR1.IICRST bit to apply an RIIC reset or an internal reset

AL Flag (Arbitration-Lost Flag)

This flag shows that bus mastership has been lost (loss in arbitration) due to a bus conflict or some other reason when a start condition is generated or an address and data are transmitted. The RIIC monitors the level on the SDA0 line during transmission and, if the level on the line does not match the value of the bit being output, sets the value of the AL flag to 1 to indicate that the bus is occupied by another device.

The RIIC can also detect loss of arbitration during NACK transmission in receive mode or during data transmission in slave mode.

[Setting conditions]

When master arbitration-lost detection is enabled: ICFER.MALE = 1

- When the internal SDA output state does not match the SDA0 line level at the rising edge of SCL except for the ACK period during data (including slave address) transmission in master transmit mode (when the SDA0 line is driven low while the internal SDA output is high (the SDA0 pin is in the high-impedance state))
- When a start condition is detected while the ICCR2.ST bit is 1 (requests to generate a start condition) or the internal SDA output state does not match the SDA0 line level
- When the ICCR2.ST bit is set to 1 (requests to generate a start condition) with the ICCR2.BBSY flag set to 1.

When NACK arbitration-lost detection is enabled: ICFER.NALE = 1

- When the internal SDA output state does not match the SDA0 line level at the rising edge of SCL in the ACK period during NACK transmission in receive mode

When slave arbitration-lost detection is enabled: ICFER.SALE = 1

- When the internal SDA output state does not match the SDA0 line level at the rising edge of SCL except for the ACK period during data transmission in slave transmit mode

[Clearing conditions]

- When 0 is written to the AL flag after reading AL = 1
- When 1 is written to the ICCR1.IICRST bit to apply an RIIC reset or an internal reset

Table 29.4 Relationship between Arbitration-Lost Generation Sources and Arbitration-Lost Enable Functions

ICFER			ICSR2		
MALE	NALE	SALE	AL	Error	Arbitration-Lost Generation Source
1	×	×	1	Start condition generation error	When internal SDA output state does not match SDA0 line level when a start condition is detected while the ICCR2.ST bit is 1
					When ICCR2.ST bit is set to 1 with ICCR2.BBSY flag set to 1
			1	Transmit data mismatch	When transmit data (including slave address) does not match the bus state in master transmit mode
×	1	×	1	NACK transmission mismatch	When ACK is detected during transmission of NACK in master receive mode or slave receive mode
×	×	1	1	Transmit data mismatch	When transmit data does not match the bus state in slave transmit mode

×: Don't care

START Flag (Start Condition Detection Flag)

[Setting condition]

- When a start condition (or a restart condition) is detected

[Clearing conditions]

- When 0 is written to the START bit after reading START = 1
- When a stop condition is detected
- When 1 is written to the ICCR1.IICRST bit to apply an RIIC reset or an internal reset

STOP Flag (Stop Condition Detection Flag)

[Setting condition]

- When a stop condition is detected

[Clearing conditions]

- When 0 is written to the STOP bit after reading STOP = 1
- When 1 is written to the ICCR1.IICRST bit to apply an RIIC reset or an internal reset

NACKF Flag (NACK Detection Flag)

[Setting condition]

- When ACK is not received (NACK is received) from the receiver in transmit mode with the ICFER.NACKE bit set to 1 (transfer suspension enabled)

[Clearing conditions]

- When 0 is written to the NACKF bit after reading NACKF = 1
- When 1 is written to the ICCR1.IICRST bit to apply an RIIC reset or an internal reset

Note: When the NACKF flag is set to 1, the RIIC suspends data transmission/reception. Writing to the ICDRT register in transmit mode or reading from the ICDRR register in receive mode with the NACKF flag set to 1 does not enable data transmit/receive operation. To restart data transmission/reception, set the NACKF flag to 0.

RDRF Flag (Receive Data Full Flag)

[Setting conditions]

- When receive data has been transferred from the ICDRS register to the ICDRR register
  This flag is set to 1 at the rising edge of the eighth or ninth SCL (selected by the ICMR3.RDRFS bit)
- When the received slave address matches after a start condition (or a restart condition) is detected with the ICCR2.TRS bit set to 0

[Clearing conditions]

- When 0 is written to the RDRF bit after reading RDRF = 1
- When data is read from the ICDRR register
- When 1 is written to the ICCR1.IICRST bit to apply an RIIC reset or an internal reset

TEND Flag (Transmission End Flag)

[Setting condition]

- At the rising edge of the ninth SCL while the TDRE flag is 1

[Clearing conditions]

- When 0 is written to the TEND bit after reading TEND = 1
- When data is written to the ICDRT register
- When a stop condition is detected
- When 1 is written to the ICCR1.IICRST bit to apply an RIIC reset or an internal reset

TDRE Flag (Transmit Data Empty Flag)

[Setting conditions]

- When data has been transferred from the ICDRT register to the ICDRS register and the ICDRT register becomes empty
- When the ICCR2.TRS bit is set to 1
- When the received slave address matches while the TRS bit is 1

[Clearing conditions]

- When data is written to the ICDRT register
- When the ICCR2.TRS bit is set to 0
- When 1 is written to the ICCR1.IICRST bit to apply an RIIC reset or an internal reset

Note: The NACKF flag becoming 1 while the ICFER.NACKE bit is 1 suspends data transmission and reception by the RIIC. Even if the next data for transmission has already been written to the ICDRT register (the TDRE flag is 0), the data in the ICDRT register is retained but not transferred to the ICDRS register. At this point, the TDRE flag does not become 1.

29.2.11 Slave Address Register Ly (SARLy) (y = 0 to 2)

Address(es): RIIC0.SARL0 0008 830Ah, RIIC0.SARL1 0008 830Ch, RIIC0.SARL2 0008 830Eh

	b7	b6	b5	b4	b3	b2	b1	b0
	SVA[6:0]							SVA0
Value after reset:	0	0	0	0	0	0	0	0

Bit	Symbol	Bit Name	Description	R/W
b0	SVA0	10-Bit Address LSB	Set a slave address	R/W
b7 to b1	SVA[6:0]	7-Bit Address/10-Bit Address Lower Bits	Set a slave address	R/W

SVA0 Bit (10-Bit Address LSB)

When the 10-bit address format is selected (SARUy.FS bit is 1), this bit functions as the LSB of a 10-bit address and forms the lower 8 bits of a 10-bit address in combination with the SVA[6:0] bits.
When the ICSER.SARyE bit is set to 1 (SARLy and SARUy enabled) and the SARUy.FS bit is 1, this bit is valid. While the SARUy.FS bit or SARyE bit is 0, the setting of this bit is ignored.

SVA[6:0] Bits (7-Bit Address/10-Bit Address Lower Bits)

When the 7-bit address format is selected (SARUy.FS bit is 0), these bits function as a 7-bit address. When the 10-bit address format is selected (SARUy.FS bit is 1), these bits function as the lower 8 bits of a 10-bit address in combination with the SVA0 bit.
While the ICSER.SARyE bit is 0, the setting of these bits is ignored.

29.2.12 Slave Address Register Uy (SARUy) (y = 0 to 2)

Address(es): RIIC0.SARU0 0008 830Bh, RIIC0.SARU1 0008 830Dh, RIIC0.SARU2 0008 830Fh

	b7	b6	b5	b4	b3	b2	b1	b0
	—	—	—	—	—	SVA[1:0]		FS
Value after reset:	0	0	0	0	0	0	0	0

Bit	Symbol	Bit Name	Description	R/W
b0	FS	7-Bit/10-Bit Address Format Select	0: The 7-bit address format is selected. 1: The 10-bit address format is selected.	R/W
b2, b1	SVA[1:0]	10-Bit Address Upper Bits	Set a slave address	R/W
b7 to b3	—	Reserved	These bits are read as 0. The write value should be 0.	R/W

FS Bit (7-Bit/10-Bit Address Format Select)

This bit is used to select 7-bit address or 10-bit address for slave address y (in registers SARLy and SARUy).
When the ICSER.SARyE bit is set to 1 (registers SARLy and SARUy enabled) and the SARUy.FS bit is 0, the 7-bit address format is selected for slave address y, the SARLy.SVA[6:0] bits setting is valid, and the settings of the SVA[1:0] bits and the SARLy.SVA0 bit are ignored.
When the ICSER.SARyE bit is set to 1 (registers SARLy and SARUy enabled) and the SARUy.FS bit is 1, the 10-bit address format is selected for slave address y and the settings of the SVA[1:0] bits and SARLy are valid.
While the ICSER.SARyE bit is 0 (registers SARLy and SARUy disabled), the setting of the SARUy.FS bit is invalid.

SVA[1:0] Bits (10-Bit Address Upper Bits)

When the 10-bit address format is selected (FS = 1), these bits function as the upper 2 bits of a 10-bit address.
When the ICSER.SARyE bit is set to 1 (SARLy and SARUy enabled) and the SARUy.FS bit is 1, these bits are valid.
While the SARUy.FS bit or SARyE bit is 0, the setting of these bits is ignored.

29.2.13 I2C-bus Bit Rate Low-Level Register (ICBRL)

Address(es): RIIC0.ICBRL 0008 8310h

	b7	b6	b5	b4	b3	b2	b1	b0
	—	—	—	BRL[4:0]				
Value after reset:	1	1	1	1	1	1	1	1

Bit	Symbol	Bit Name	Description	R/W
b4 to b0	BRL[4:0]	Bit Rate Low Period	Low period of SCL	R/W
b7 to b5	—	Reserved	These bits are read as 1. The write value should be 1.	R/W

ICBRL is a 5-bit register to set the low period of SCL.
It also works to generate the data setup time for automatic SCL low-hold operation (refer to section 29.8, Automatic Low-Hold Function for SCL); when the RIIC is used only in slave mode, this register needs to be set to a value longer than the data setup time*1.
ICBRL counts the low period with the internal reference clock (IICφ) specified by the ICMR1.CKS[2:0] bits.
If the digital noise filter is enabled (the ICFER.NFE bit is 1), set the ICBRL register to a value at least one greater than the number of stages in the noise filter. Regarding the number of stages in the noise filter, see the description of the ICMR3.NF[1:0] bits.

Note 1. Data setup time (tSU;DAT)
250 ns (up to 100 kbps: Standard-mode (Sm))
100 ns (up to 400 kbps: Fast-mode (Fm))

29.2.14 I2C-bus Bit Rate High-Level Register (ICBRH)

Address(es): RIIC0.ICBRH 0008 8311h

	b7	b6	b5	b4	b3	b2	b1	b0
	—	—	—	BRH[4:0]				
Value after reset:	1	1	1	1	1	1	1	1

Bit	Symbol	Bit Name	Description	R/W
b4 to b0	BRH[4:0]	Bit Rate High Period	High period of SCL	R/W
b7 to b5	—	Reserved	These bits are read as 1. The write value should be 1.	R/W

ICBRH is a 5-bit register to set the high period of SCL. ICBRH is valid in master mode. If the RIIC is used only in slave mode, this register need not to set the high period.
ICBRH counts the high period with the internal reference clock (IICφ) specified by the ICMR1.CKS[2:0] bits.
If the digital noise filter is enabled (the ICFER.NFE bit is 1), set the ICBRH register to a value at least one greater than the number of stages in the noise filter. Regarding the number of stages in the noise filter, see the description of the ICMR3.NF[1:0] bits.

The I2C transfer rate and the SCL duty are calculated using the following expression.
Transfer rate = 1 / {[(ICBRH + 1) + (ICBRL + 1)] / IICφ*1 + SCL0 line rise time [tr] + SCL0 line fall time [tf]}
Duty cycle = {SCL0 line rise time [tr]*2 + (ICBRH + 1) / IICφ} / {SCL0 line fall time [tf]*2 + (ICBRL + 1) / IICφ}

Note 1. IICφ = PCLK × Division ratio
Note 2. The SCL0 line rise time [tr] and SCL0 line fall time [tf] depend on the total bus line capacitance [Cb] and the pull-up resistor [Rp]. For details, refer to the I2C-bus specification from NXP Semiconductors.

Table 29.5 lists examples of ICBRH/ICBRL settings.

Table 29.5 Examples of ICBRH/ICBRL Settings for Transfer Rate

Transfer Rate (kbps)	Operating Frequency PCLK (MHz)								
	8			10			12.5		
	CKS[2:0]	ICBRH	ICBRL	CKS[2:0]	ICBRH	ICBRL	CKS[2:0]	ICBRH	ICBRL
10	100b	22 (F6h)	25 (F9h)	101b	13 (EDh)	15 (EFh)	101b	16 (F0h)	20 (F4h)
50	010b	16 (F0h)	19 (F3h)	010b	21 (F5h)	24 (F8h)	011b	12 (ECh)	15 (EFh)
100	001b	15 (EFh)	18 (F2h)	001b	19 (F3h)	23 (F7h)	001b	24 (F8h)	29 (FDh)
400	000b	4 (E4h)	10 (EAh)	000b	5 (E5h)	12 (ECh)	000b	7 (E7h)	16 (F0h)

Transfer Rate (kbps)	Operating Frequency PCLK (MHz)								
	16			20			25		
	CKS[2:0]	ICBRH	ICBRL	CKS[2:0]	ICBRH	ICBRL	CKS[2:0]	ICBRH	ICBRL
10	101b	22 (F6h)	25 (F9h)	110b	13 (EDh)	15 (EFh)	110b	16 (F0h)	20 (F4h)
50	011b	16 (F0h)	19 (F3h)	011b	21 (F5h)	24 (F8h)	100b	12 (ECh)	15 (EFh)
100	010b	15 (EFh)	18 (F2h)	010b	19 (F3h)	23 (F7h)	010b	24 (F8h)	29 (FDh)
400	000b	9 (E9h)	20 (F4h)	000b	11 (EBh)	25 (F9h)	001b	7 (E7h)	16 (F0h)

Transfer Rate (kbps)	Operating Frequency PCLK (MHz)					
	30			32		
	CKS[2:0]	ICBRH	ICBRL	CKS[2:0]	ICBRH	ICBRL
10	110b	20 (F4h)	24 (F8h)	110b	22 (F6h)	25 (F9h)
50	100b	15 (EFh)	18 (F2h)	100b	16 (F0h)	19 (F3h)
100	011b	14 (EEh)	17 (F1h)	011b	15 (EFh)	18 (F2h)
400	001b	8 (E8h)	19 (F3h)	001b	9 (E9h)	20 (F4h)

Note: ICBRH/ICBRL settings in these tables are calculated using the following values:
SCL0 line rise time (tr): 100 kbps or less (Sm): 1000 ns, 400 kbps or less (Fm): 300 ns
SCL0 line fall time (tf): 400 kbps or less (Sm/Fm): 300 ns
For the specified values of rise time (tr) and fall time (tf) of the SCL0 signal, refer to the I2C-bus specification from NXP Semiconductors.

29.2.15 I2C-bus Transmit Data Register (ICDRT)

Address(es): RIIC0.ICDRT 0008 8312h

	b7	b6	b5	b4	b3	b2	b1	b0
Value after reset:	1	1	1	1	1	1	1	1

When the ICDRT register detects a space in the I2C-bus shift register (ICDRS), it transfers the transmit data that has been written to the ICDRT register to the ICDRS register and starts transmitting data in transmit mode.
The double-buffer structure of the ICDRT register and the ICDRS register allows continuous transmit operation if the next transmit data has been written to the ICDRT register while the ICDRS register data is being transmitted.
The ICDRT register can always be read and written. Write transmit data to the ICDRT register once when a transmit data empty interrupt (TXI) request is generated.

29.2.16 I2C-bus Receive Data Register (ICDRR)

Address(es): RIIC0.ICDRR 0008 8313h

	b7	b6	b5	b4	b3	b2	b1	b0
Value after reset:	0	0	0	0	0	0	0	0

When 1 byte of data has been received, the received data is transferred from the I2C-bus shift register (ICDRS) to the ICDRR register to enable the next data to be received.
The double-buffer structure of the ICDRS register and the ICDRR register allows continuous receive operation if the received data has been read from the ICDRR register while the ICDRS register is receiving data.
The ICDRR register cannot be written. Read data from the ICDRR register once when a receive data full interrupt (RXI) request is generated.
If the ICDRR register receives the next receive data before the current data is read from the ICDRR register (while the ICSR2.RDRF flag is 1), the RIIC automatically holds the SCL line low one cycle before the RDRF flag is set to 1 next.

29.2.17 I2C-bus Shift Register (ICDRS)

The ICDRS register is an 8-bit shift register to transmit and receive data.
During transmission, transmit data is transferred from the ICDRT register to the ICDRS register and is sent from the SDA0 pin. During reception, data is transferred from the ICDRS register to the ICDRR register after 1 byte of data has been received.
The ICDRS register cannot be accessed directly.

29.3 Operation

29.3.1 Communication Data Format

The I2C-bus format consists of 8-bit data and 1-bit acknowledgment. The first byte following a start condition or restart condition is an address byte used to specify a slave device with which the master device communicates. The specified slave is valid until a new slave is specified or a stop condition is generated.
Figure 29.2 shows the I2C-bus format, and Figure 29.3 shows the I2C-bus timing.

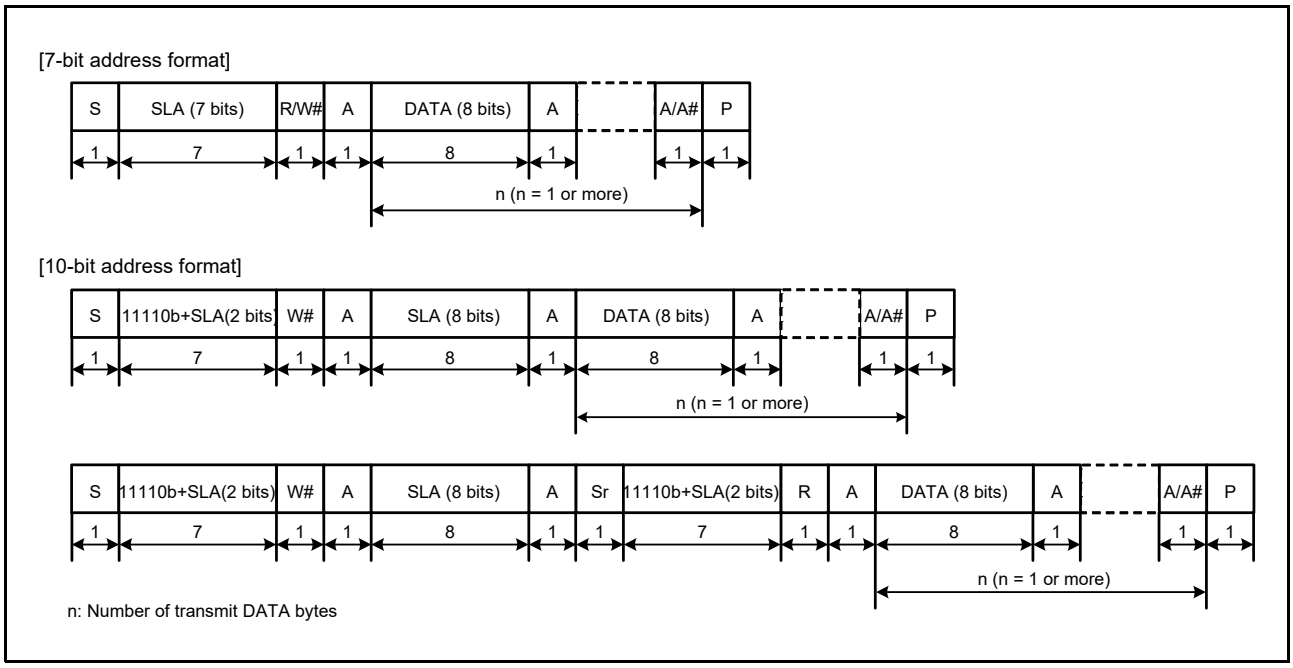

Figure 29.2 I2C-bus Format

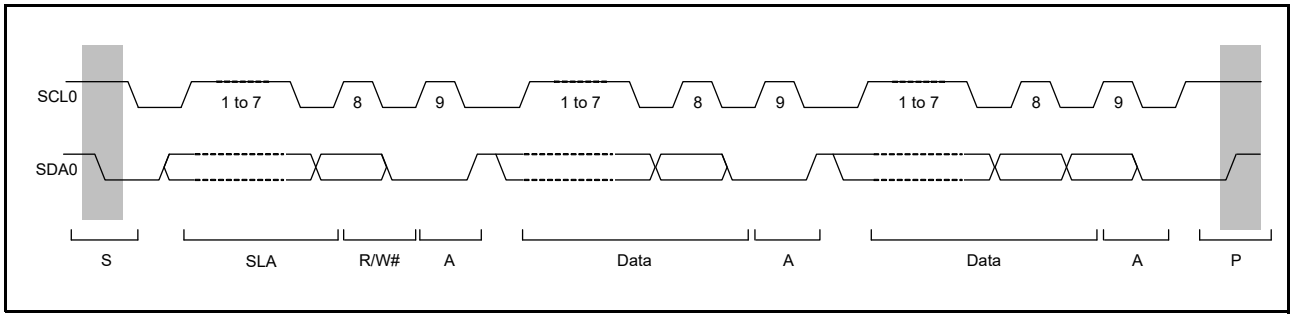

Figure 29.3 I2C-bus Timing (SLA = 7 Bits)

S: Start condition. The master device drives the SDA0 line low from high while the SCL0 line is high.

SLA: Slave address, by which the master device selects a slave device.

R/W#: Indicates the direction of data transfer: from the slave device to the master device when R/W is 1, or from the master device to the slave device when R/W is 0.

A: Acknowledge. The receiver drives the SDA0 line low. (In master transmit mode, the slave device returns acknowledge. In master receive mode, the master device returns acknowledge.)

A#: Not Acknowledge. The receiver drives the SDA0 line high.

Sr: Restart condition. The master device drives the SDA0 line low from high after the setup time has elapsed with the SCL0 line high.

DATA: Transmitted or received data

P: Stop condition. The master device drives the SDA0 line high from low while the SCL0 line is high.

29.3.2 Initial Settings

Before starting data transmission and reception, initialize the RIIC according to the procedure in Figure 29.4.
Set the ICCR1.ICE bit to 1 (internal reset) after setting the ICCR1.IICRST bit to 1 (RIIC reset) with the ICCR1.ICE bit set to 0 (SCL0 and SDA0 pins in inactive state). This initializes the various flags and internal state of the ICSR1 register. After that, set registers SARLy, SARUy, ICSER, ICMR1, ICBRH, and ICBRL (y = 0 to 2), and set the other registers as necessary (for initial settings of the RIIC, see Figure 29.4). When the necessary register settings have been completed, set the ICCR1.IICRST bit to 0 (releases the RIIC reset). This step is not necessary if initialization of the RIIC has already been completed.

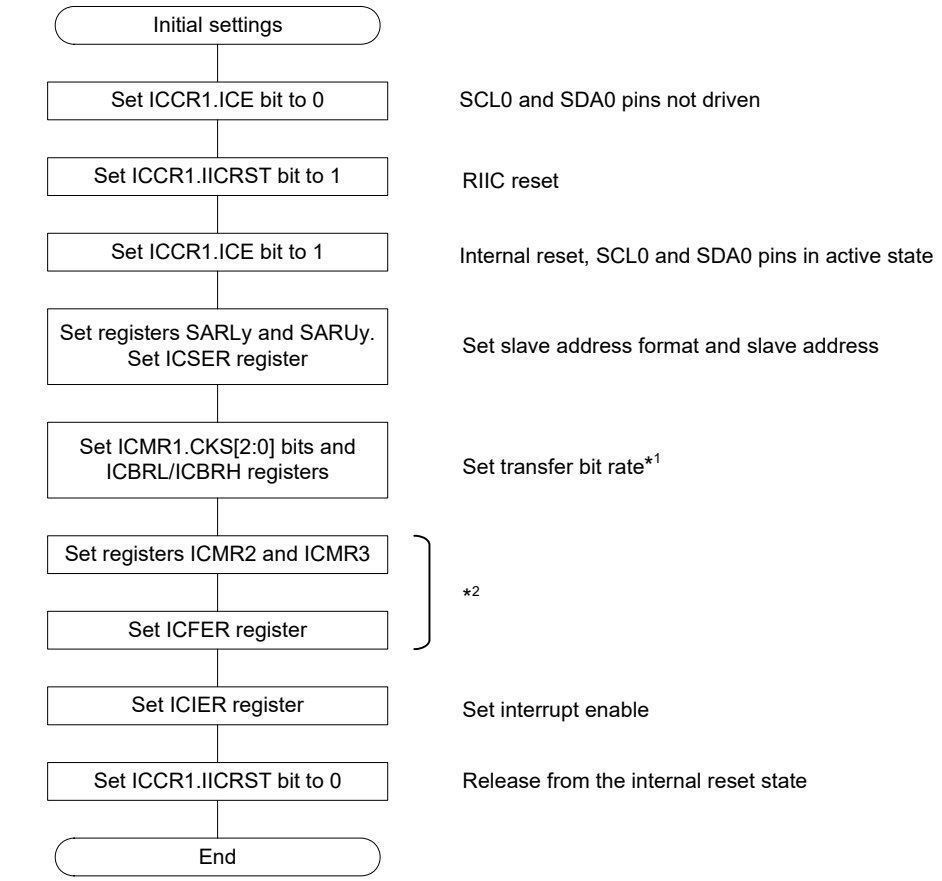

y = 0 to 2

Note 1. When the RIIC is used only in slave mode, set the ICBRL register to a value longer than the data setup time.
Note 2. Set these registers as necessary.

Figure 29.4 Example of RIIC Initialization Flowchart

29.3.3 Master Transmit Operation

In master transmit operation, the RIIC generates clock signals and sends data as the master device, and the slave device returns acknowledgments. Figure 29.5 shows an example of usage of master transmission and Figure 29.6 to Figure 29.8 show the timing of operations in master transmission.
The following describes the procedure and operations for master transmission.

(1) Initial settings. For details, refer to section 29.3.2, Initial Settings.
(2) Read the ICCR2.BBSY flag to check that the bus is open, and then set the ICCR2.ST bit to 1 (requests to generate a start condition). Upon receiving the request, the RIIC generates a start condition. At the same time, the BBSY flag and the ICSR2.START flag are automatically set to 1 and the ST bit is automatically set to 0. At this time, if the start condition is detected and the internal levels for the SDA output state and the levels on the SDA0 line have matched while the ST bit is 1, the RIIC recognizes that generating of the start condition as requested by the ST bit has been successfully completed, and bits MST and TRS in the ICCR2 register are automatically set to 1, placing the RIIC in master transmit mode. The ICSR2.TDRE flag is also automatically set to 1 in response to setting of the TRS bit to 1.
(3) Check that the ICSR2.TDRE flag is 1, and then write the value for transmission (the slave address and the R/W# bit) to the ICDRT register. Once the data for transmission are written to the ICDRT register, the TDRE flag is automatically set to 0, the data are transferred from the ICDRT register to the ICDRS register, and the TDRE flag is again set to 1. After the byte containing the slave address and R/W# bit has been transmitted, the value of the TRS bit is automatically updated to select master transmit or master receive mode in accord with the value of the transmitted R/W# bit. If the value of the R/W# bit was 0, the RIIC continues in master transmit mode.
Because the ICSR2.NACKF flag being 1 at this time indicates that no slave device recognized the address or there was an error in communications, write 1 to the ICCR2.SP bit to generate a stop condition.
For data transmission with an address in the 10-bit format, start by writing 1111 0b, the 2 higher-order bits of the slave address, and W to the ICDRT register as the first address transmission. Then, as the second address transmission, write the 8 lower-order bits of the slave address to the ICDRT register.
(4) After confirming that the ICSR2.TDRE flag is 1, write the data for transmission to the ICDRT register. The RIIC automatically holds the SCL0 line low until the data for transmission are ready or a stop condition is generated.
(5) After all bytes of data for transmission have been written to the ICDRT register, wait until the ICSR2.NACKF or ICSR2.TEND flag becomes 1, and then set the ICCR2.SP bit to 1 (requests to generate a stop condition). Upon receiving a stop condition generation request, the RIIC generates the stop condition.
(6) Upon detecting the stop condition, the RIIC automatically sets bits MST and TRS in the ICCR2 register to 00b and enters slave receive mode. Furthermore, it automatically sets the TDRE and TEND flags to 0, and sets the ICSR2.STOP flag to 1.
(7) After checking that the ICSR2.STOP flag is 1, set the ICSR2.NACKF and STOP flags to 0 for the next transfer operation.

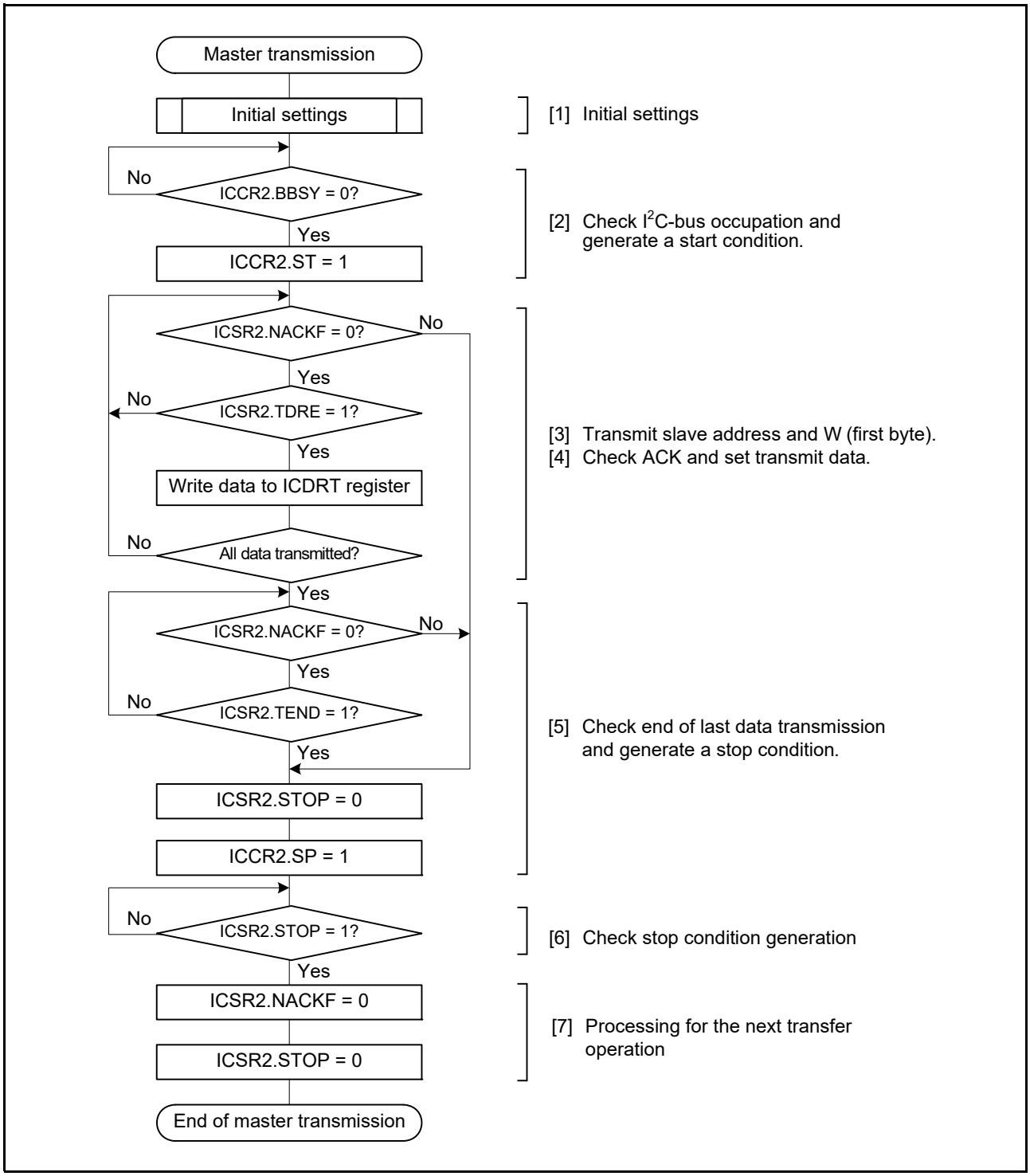

Figure 29.5 Example of Master Transmission Flowchart

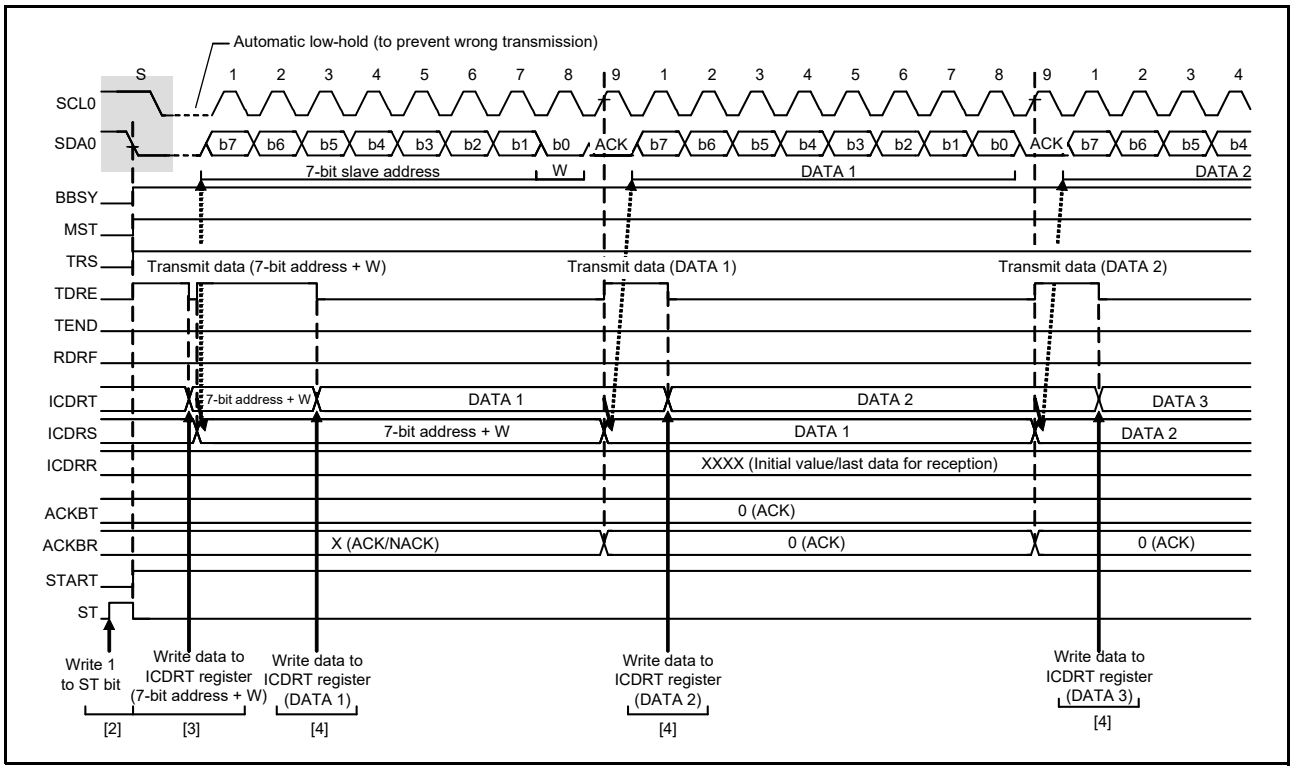

Figure 29.6 Master Transmit Operation Timing (1) (7-Bit Address Format)

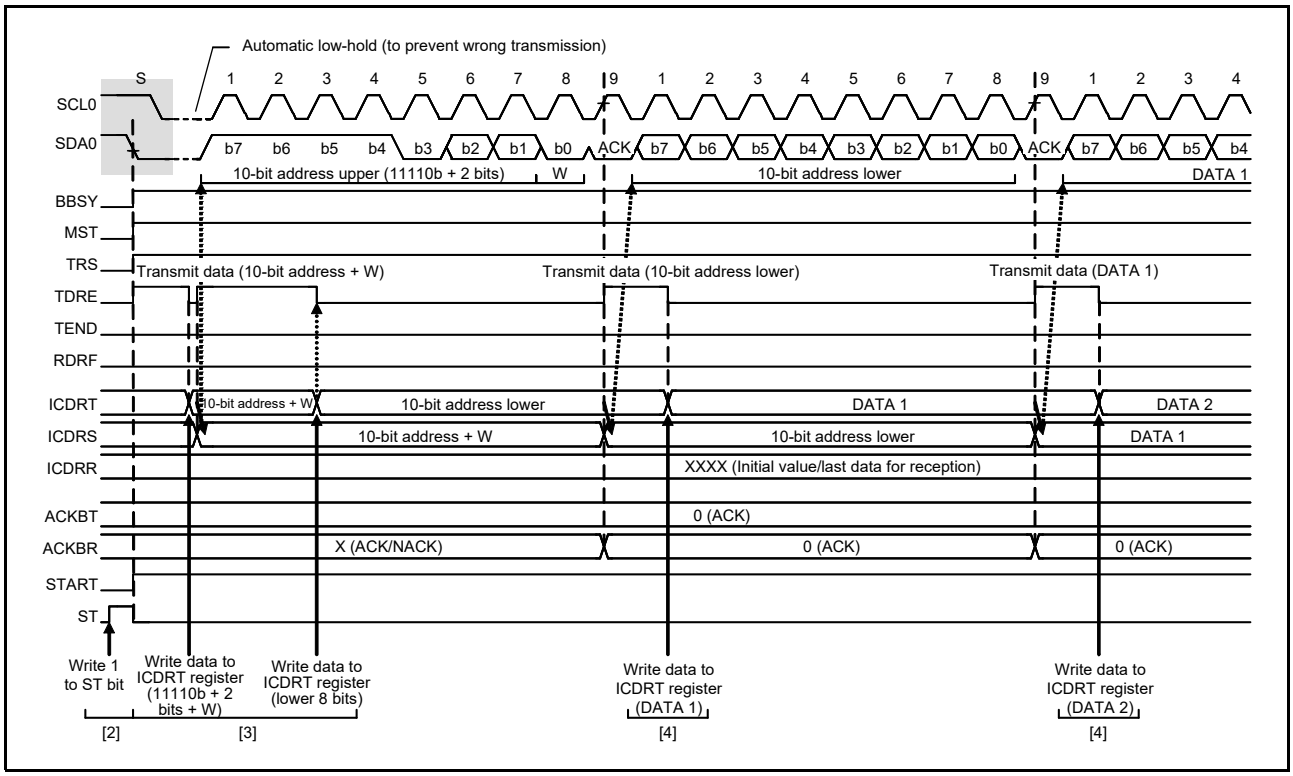

Figure 29.7 Master Transmit Operation Timing (2) (10-Bit Address Format)

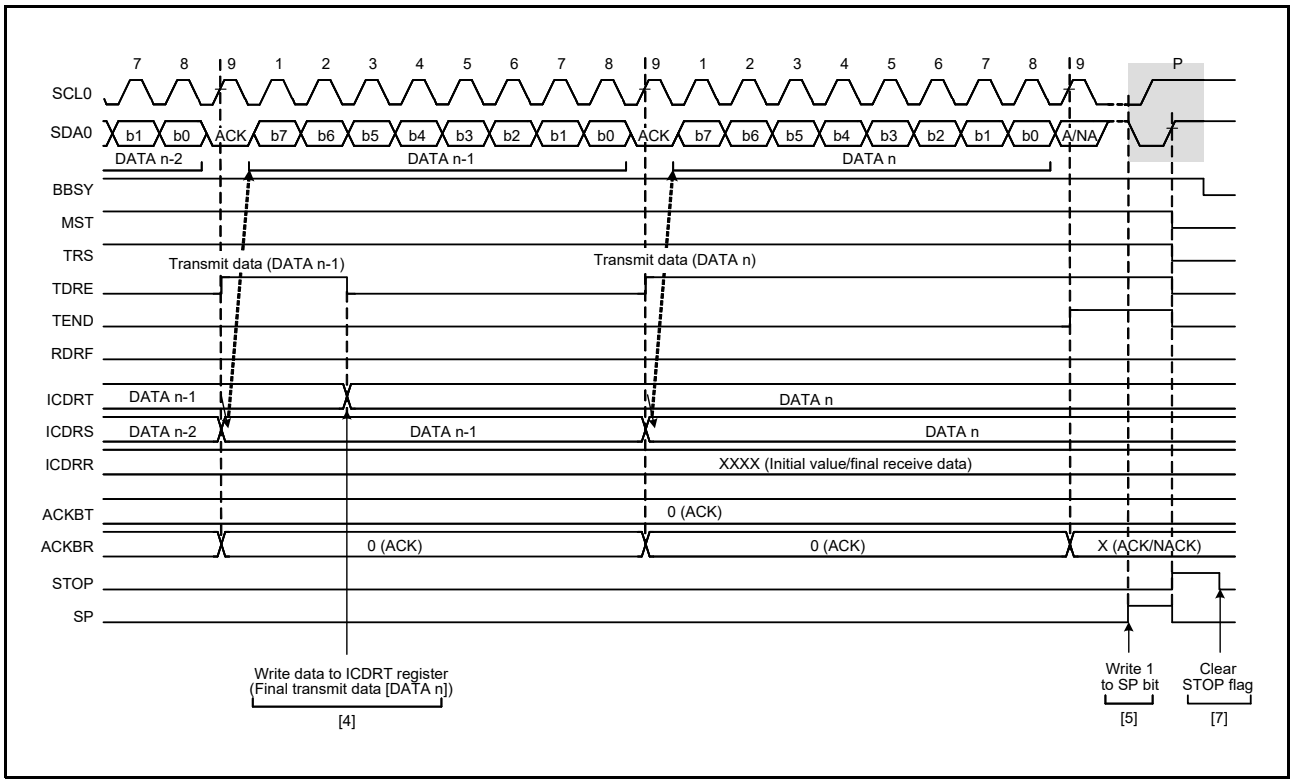

Figure 29.8 Master Transmit Operation Timing (3)

29.3.4 Master Receive Operation

In master receive operation, the RIIC as a master device generates clock signals, receives data from the slave device, and returns acknowledgments. Because the RIIC must start by sending a slave address to the corresponding slave device, this part of the procedure is performed in master transmit mode, but the subsequent steps are in master receive mode.
Figure 29.9 and Figure 29.10 show examples of usage of master reception (7-bit address format) and Figure 29.11 to Figure 29.13 show the timing of operations in master reception.
The following describes the procedure and operations for master reception.

(1) Initial settings. For details, refer to section 29.3.2, Initial Settings.

(2) Read the ICCR2.BBSY flag to check that the bus is open, and then set the ICCR2.ST bit to 1 (requests to generate a start condition). Upon receiving the request, the RIIC generates a start condition. When the RIIC detects the start condition, the BBSY flag and the ICSR2.START flag are automatically set to 1 and the ST bit is automatically set to 0. At this time, if the start condition is detected and the levels for the SDA output and the levels on the SDA0 line have matched while the ST bit is 1, the RIIC recognizes that generating of the start condition as requested by the ST bit has been successfully completed, and bits MST and TRS in the ICCR2 register are automatically set to 1, placing the RIIC in master transmit mode. The ICSR2.TDRE flag is also automatically set to 1 in response to setting of the TRS bit to 1.

(3) Check that the ICSR2.TDRE flag is 1, and then write the value for transmission (the first byte indicates the slave address and value of the R/W# bit) to the ICDRT register. Once the data for transmission are written to the ICDRT register, the TDRE flag is automatically set to 0, the data are transferred from the ICDRT register to the ICDRS register, and the TDRE flag is again set to 1. Once the byte containing the slave address and R/W# bit has been transmitted, the value of the ICCR2.TRS bit is automatically updated to select transmit or receive mode in accord with the value of the transmitted R/W# bit. If the value of the R/W# bit was 1, the TRS bit is set to 0 on the rising edge of the ninth SCL, placing the RIIC in master receive mode. At this time, the TDRE flag is set to 0 and the ICSR2.RDRF flag is automatically set to 1.

Because the ICSR2.NACKF flag being 1 at this time indicates that no slave device recognized the address or there was an error in communications, write 1 to the ICCR2.SP bit to generate a stop condition.
For master reception from a device with a 10-bit address, start by using master transmission to send the 10-bit address, and then generate a restart condition. After that, transmitting 1111 0b, the two higher-order bits of the slave address, and the R bit places the RIIC in master receive mode.

(4) Dummy read the ICDRR register after confirming that the ICSR2.RDRF flag is 1; this makes the RIIC start output of the SCL and start data reception.

(5) After 1 byte of data has been received, the ICSR2.RDRF flag is set to 1 on the rising edge of the eighth or ninth SCL (the clock signal) as selected by the ICMR3.RDRFS bit. Reading the ICDRR register at this time will produce the received data, and the RDRF flag is automatically set to 0 at the same time. Furthermore, the value of the acknowledgment bit received during the ninth SCL is returned as the value set in the ICMR3.ACKBT bit. Furthermore, if the next byte to be received is the next to last byte, set the ICMR3.WAIT bit to 1 (for wait insertion) before reading the ICDRR register (containing the second byte from last). As well as enabling NACK output even in the case of delays in processing to set the ICMR3.ACKBT bit to 1 (NACK) in step (6), due to other interrupts, etc., this fixes the SCL0 line to low on the falling edge of the ninth clock pulse in reception of the last byte, so the state is such that generating a stop condition is possible.

(6) When the ICMR3.RDRFS bit is 0 and the slave device must be notified that it is to end transfer for data reception after transfer of the next (final) byte, set the ICMR3.ACKBT bit to 1 (NACK).

(7) After reading the byte before last from the ICDRR register, if the value of the ICSR2.RDRF flag is confirmed to be 1, write 1 to the ICCR2.SP bit (requests to generate a stop condition) and then read the last byte from the ICDRR register. When the ICDRR register is read, the RIIC is released from the wait state and generates the stop condition after low-level output in the ninth clock pulse is completed or the SCL0 line is released from the low-hold state.

(8) Upon detecting the stop condition, the RIIC automatically sets bits MST and TRS in the ICCR2 register to 00b and enters slave receive mode. Furthermore, detection of the stop condition leads to setting of the ICSR2.STOP flag to 1.

(9) After checking that the ICSR2.STOP flag is 1, set the ICSR2.NACKF and STOP flags to 0 for the next transfer operation.

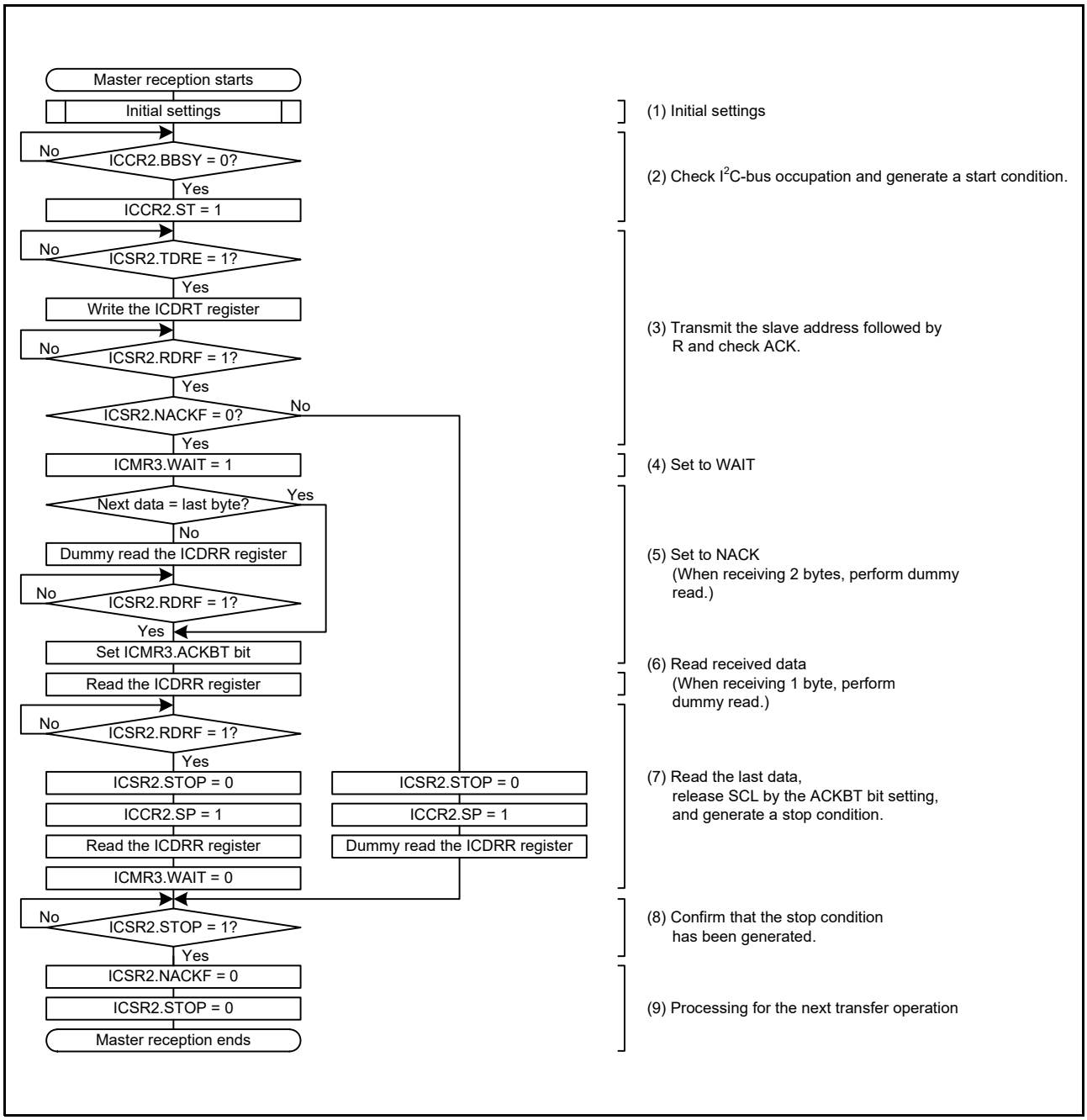

Figure 29.9 Example of Master Reception (7-Bit Address Format, 1 or 2 bytes)

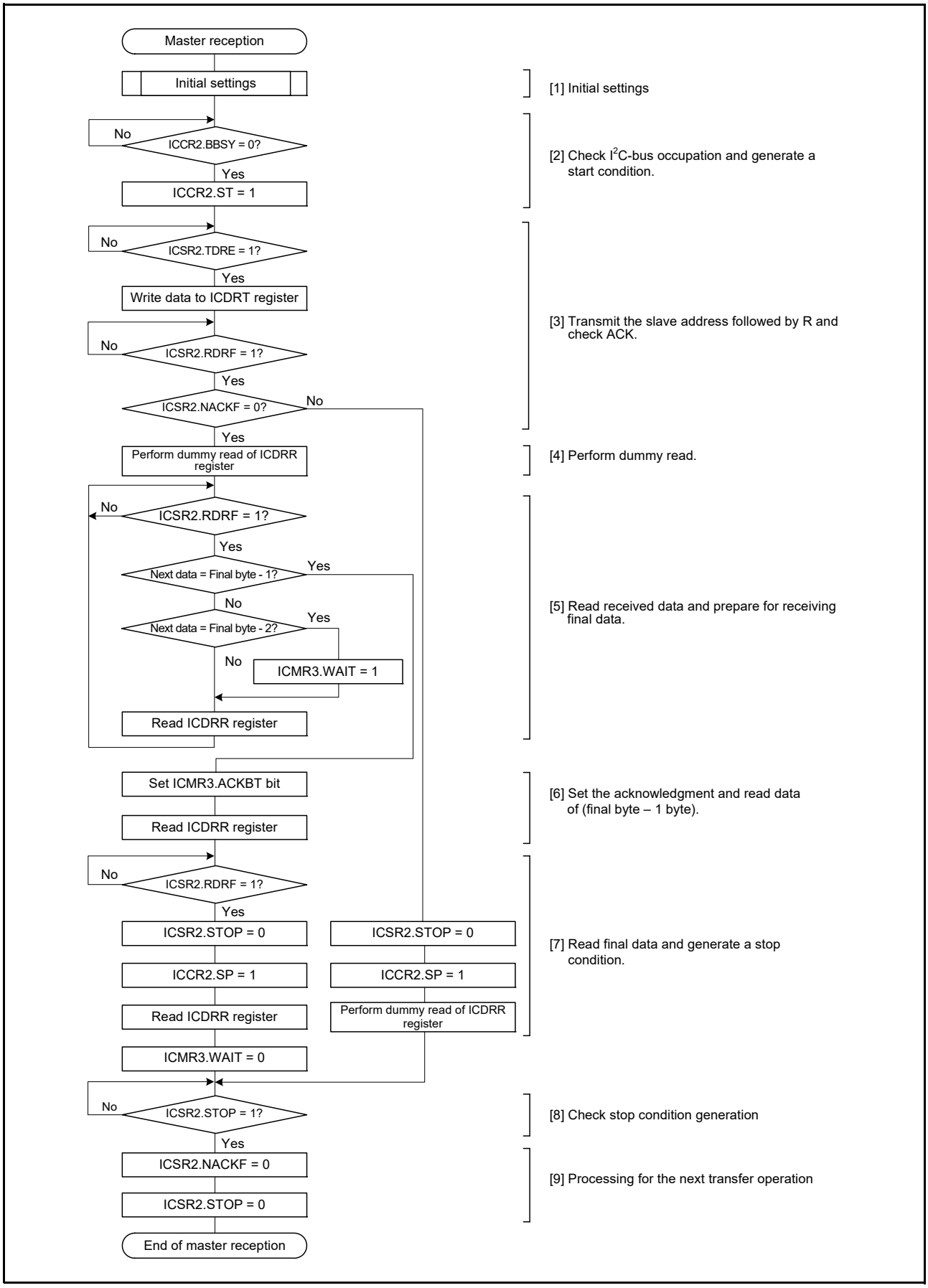

Figure 29.10 Example of Master Reception (7-Bit Address Format, 3 Bytes or More)

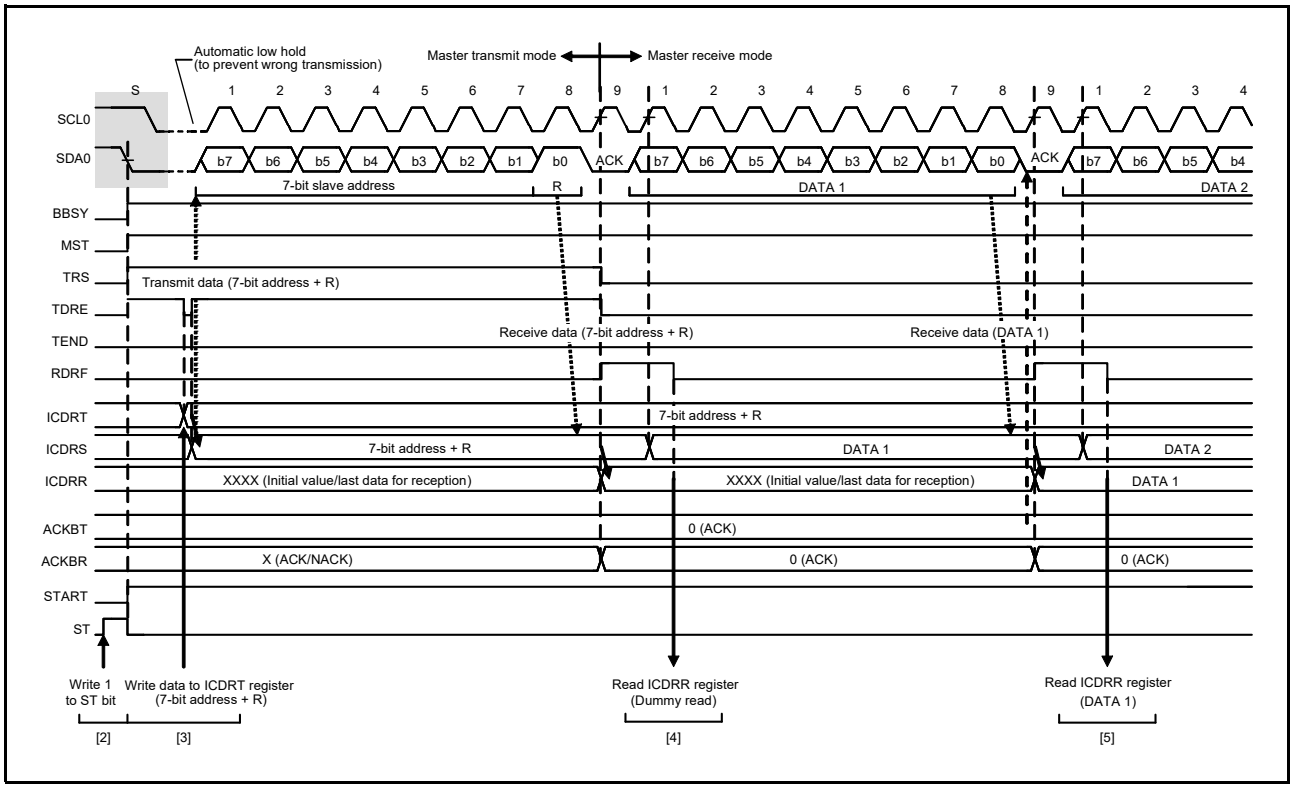

Figure 29.11 Master Receive Operation Timing (1) (7-Bit Address Format, When RDRFS bit is 0)

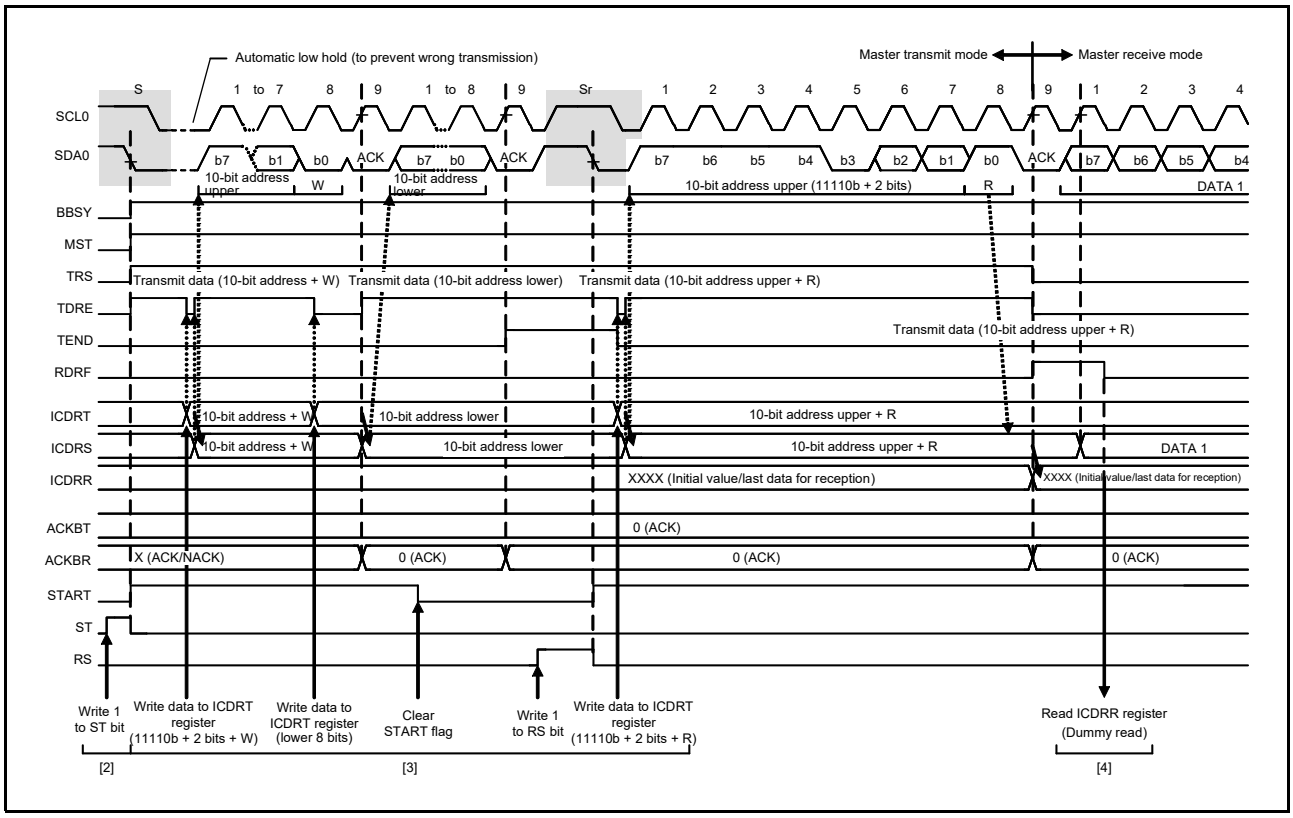

Figure 29.12 Master Receive Operation Timing (2) (10-Bit Address Format, When RDRFS bit is 0)

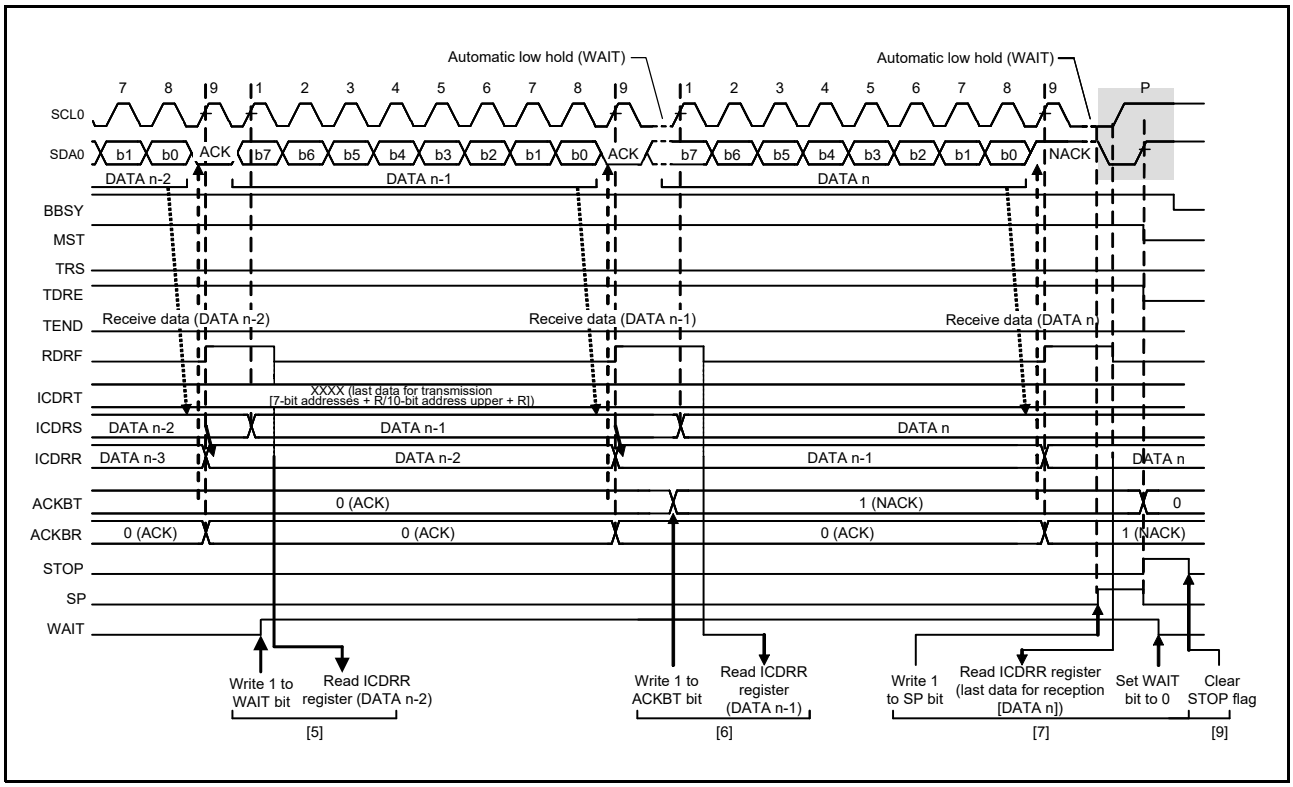

Figure 29.13 Master Receive Operation Timing (3) (When RDRFS bit is 0)

29.3.5 Slave Transmit Operation

In slave transmit operation, the master device outputs the SCL, the RIIC transmits data as a slave device, and the master device returns acknowledgments.

Figure 29.14 shows an example of usage of slave transmission and Figure 29.15 and Figure 29.16 show the timing of operations in slave transmission.

The following describes the procedure and operations for slave transmission.

(1) Initial settings. For details, refer to section 29.3.2, Initial Settings.
After initial settings, the RIIC will stay in the standby state until it receives a slave address that it matches.

(2) After receiving a matching slave address, the RIIC sets one of the corresponding bits ICSR1.HOA, GCA, and AASy (y = 0 to 2) to 1 on the rising edge of the ninth SCL (the clock signal) and outputs the value set in the ICMR3.ACKBT bit to the acknowledgment bit on the ninth SCL. If the value of the R/W# bit that was also received at this time is 1, the RIIC automatically places itself in slave transmit mode by setting both the ICCR2.TRS bit and the ICSR2.TDRE flag to 1.

(3) After the ICSR2.TDRE flag is confirmed to be 1, write the data for transmission to the ICDRT register. At this time, if the RIIC does not receive ACK from the master device (receives an NACK signal) while the ICFER.NACKE bit is 1, the RIIC suspends transfer of the next data.

(4) Wait until the ICSR2.TEND flag is set to 1 while the ICSR2.TDRE flag is 1, after the ICSR2.NACKF flag is set to 1 or the last byte for transmission is written to the ICDRT register. When the ICSR2.NACKF flag or the TEND flag is 1, the RIIC drives the SCL0 line low on the falling edge of ninth SCL.

(5) When the ICSR2.NACKF flag or the ICSR2.TEND flag is 1, dummy read the ICDRR register to complete the processing. This releases the SCL0 line.

(6) Upon detecting the stop condition, the RIIC automatically sets bits ICSR1.HOA, GCA, and AASy (y = 0 to 2), flags ICSR2.TDRE and TEND, and the ICCR2.TRS bit to 0, and enters slave receive mode.

(7) After checking that the ICSR2.STOP flag is 1, set the ICSR2.NACKF and STOP flags to 0 for the next transfer operation.

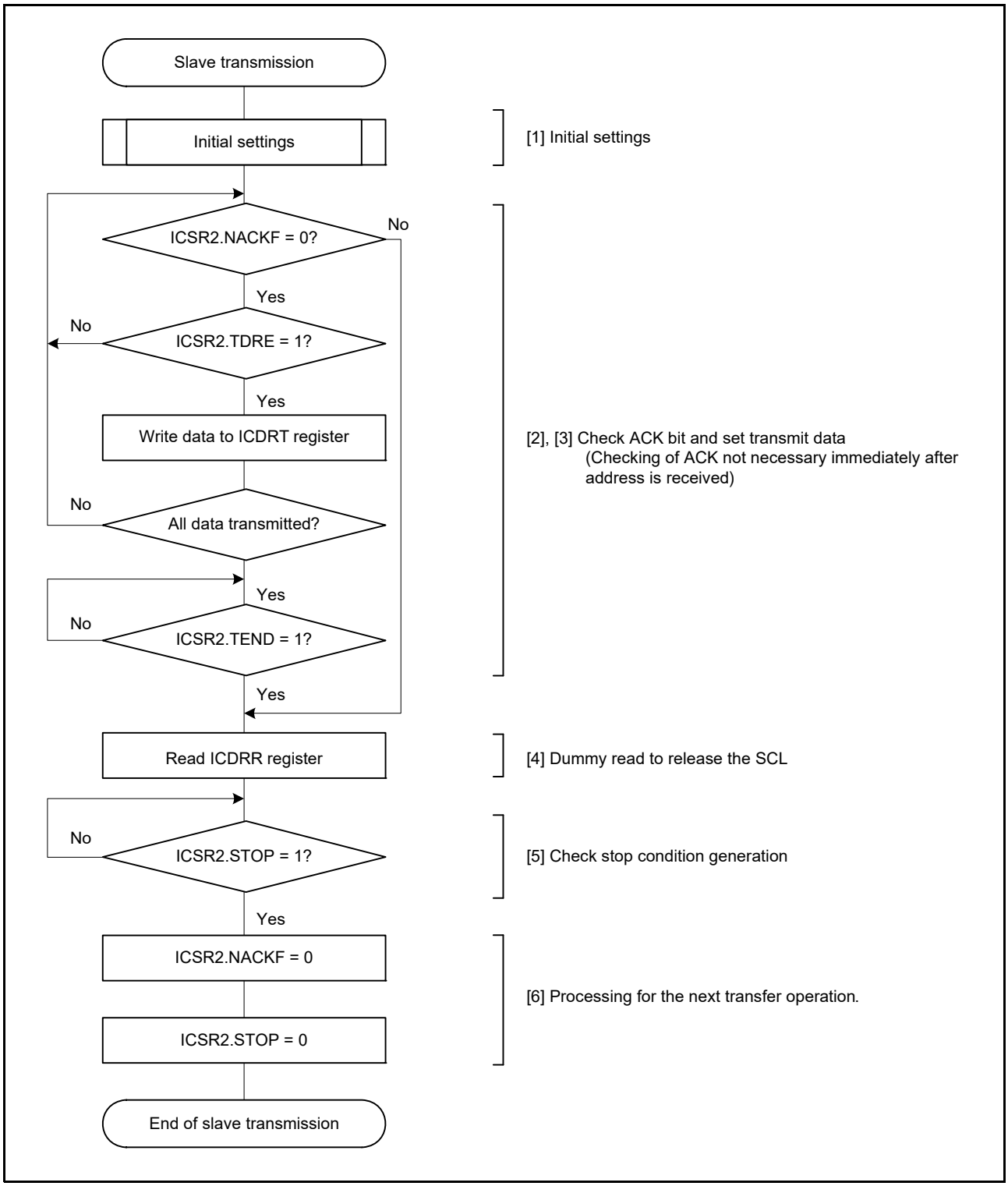

Figure 29.14 Example of Slave Transmission Flowchart

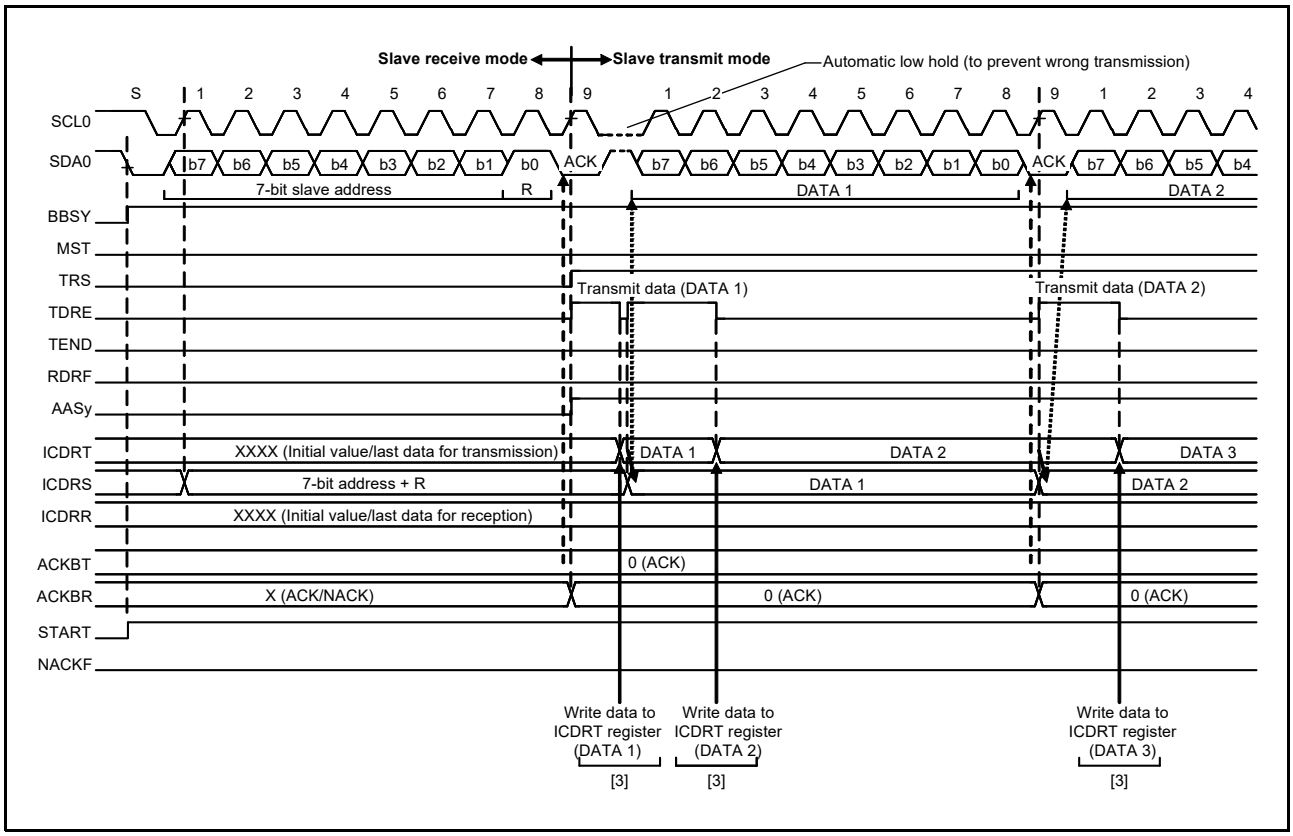

Figure 29.15 Slave Transmit Operation Timing (1) (7-Bit Address Format)

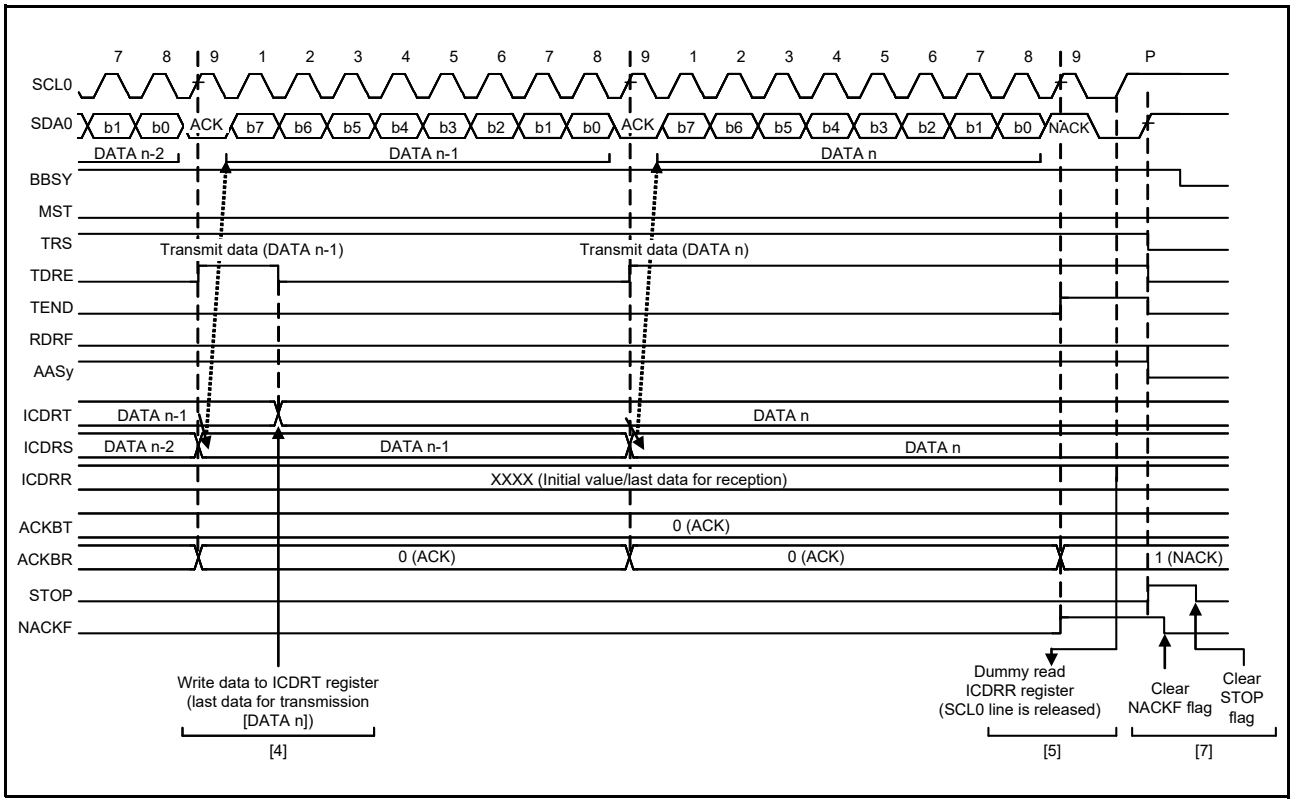

Figure 29.16 Slave Transmit Operation Timing (2)

29.3.6 Slave Receive Operation

In slave receive operation, the master device outputs the SCL and transmit data, and the RIIC returns acknowledgments as a slave device.

Figure 29.17 shows an example of usage of slave reception and Figure 29.18 and Figure 29.19 show the timing of operations in slave reception.

The following describes the procedure and operations for slave reception.

(1) Initial settings. For details, refer to section 29.3.2, Initial Settings.
After initial settings, the RIIC will stay in the standby state until it receives a slave address that it matches.

(2) After receiving a matching slave address, the RIIC sets one of the corresponding bits ICSR1.HOA, GCA, and AASy (y = 0 to 2) to 1 on the rising edge of the ninth SCL (the clock signal) and outputs the value set in the ICMR3.ACKBT bit to the acknowledgment bit on the ninth SCL. If the value of the R/W# bit that was also received at this time is 0, the RIIC continues to place itself in slave receive mode and sets the ICSR2.RDRF flag to 1.

(3) After the ICSR2.STOP flag is confirmed to be 0 and the ICSR2.RDRF flag to be 1, dummy read the ICDRR register (the dummy value consists of the slave address and R/W# bit when the 7-bit address format is selected, or the lower 8 bits when the 10-bit address format is selected).

(4) When the ICDRR register is read, the RIIC automatically sets the ICSR2.RDRF flag to 0. If reading of the ICDRR register is delayed and a next byte is received while the RDRF flag is still set to 1, the RIIC holds the SCL0 line low from one SCL cycle before the timing with which RDRF should be set. In this case, reading the ICDRR register releases the SCL0 line from being held low.
When the ICSR2.STOP flag is 1 and the ICSR2.RDRF flag is also 1 or when all the data is completely received, read the ICDRR register.

(5) Upon detecting the stop condition, the RIIC automatically clears bits ICSR1.HOA, GCA, and AASy (y = 0 to 2) to 0.

(6) After checking that the ICSR2.STOP flag is 1, set the ICSR2.STOP flag to 0 for the next transfer operation.

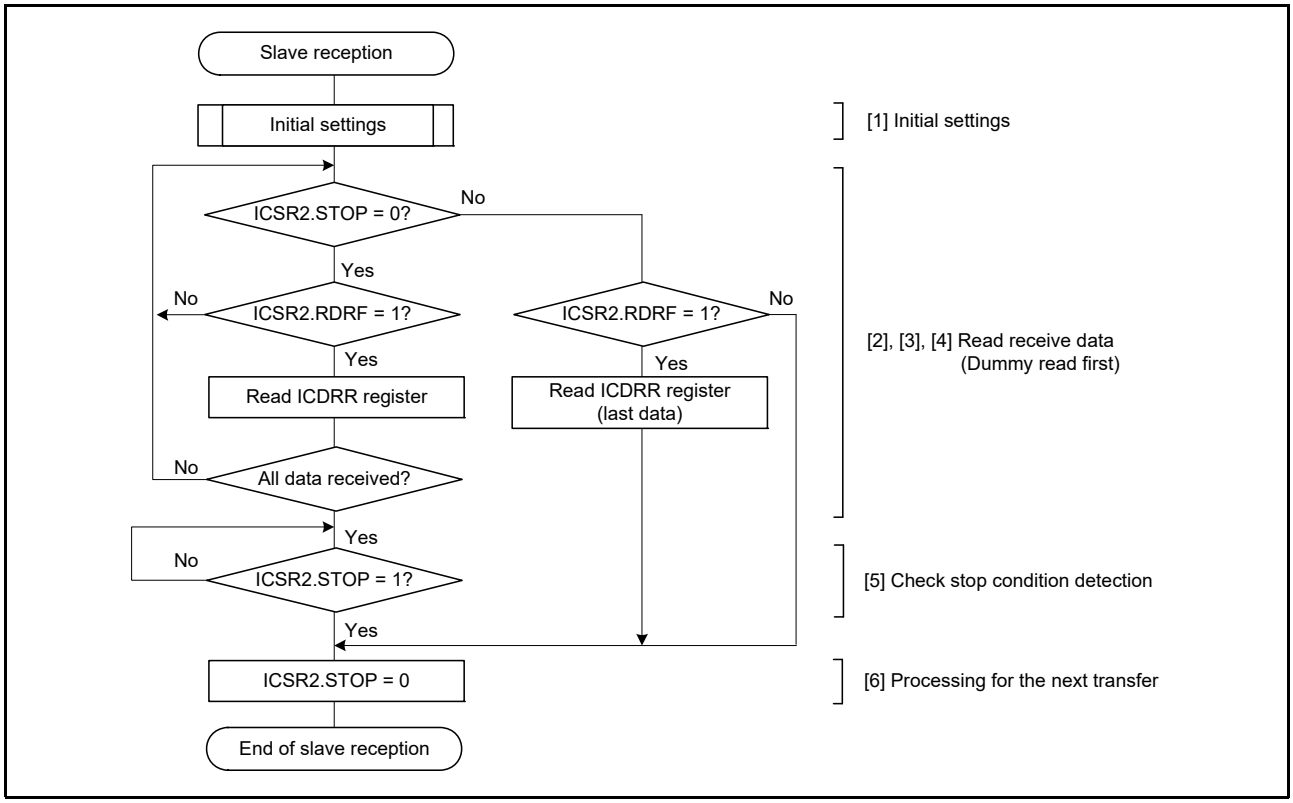

Figure 29.17 Example of Slave Reception Flowchart

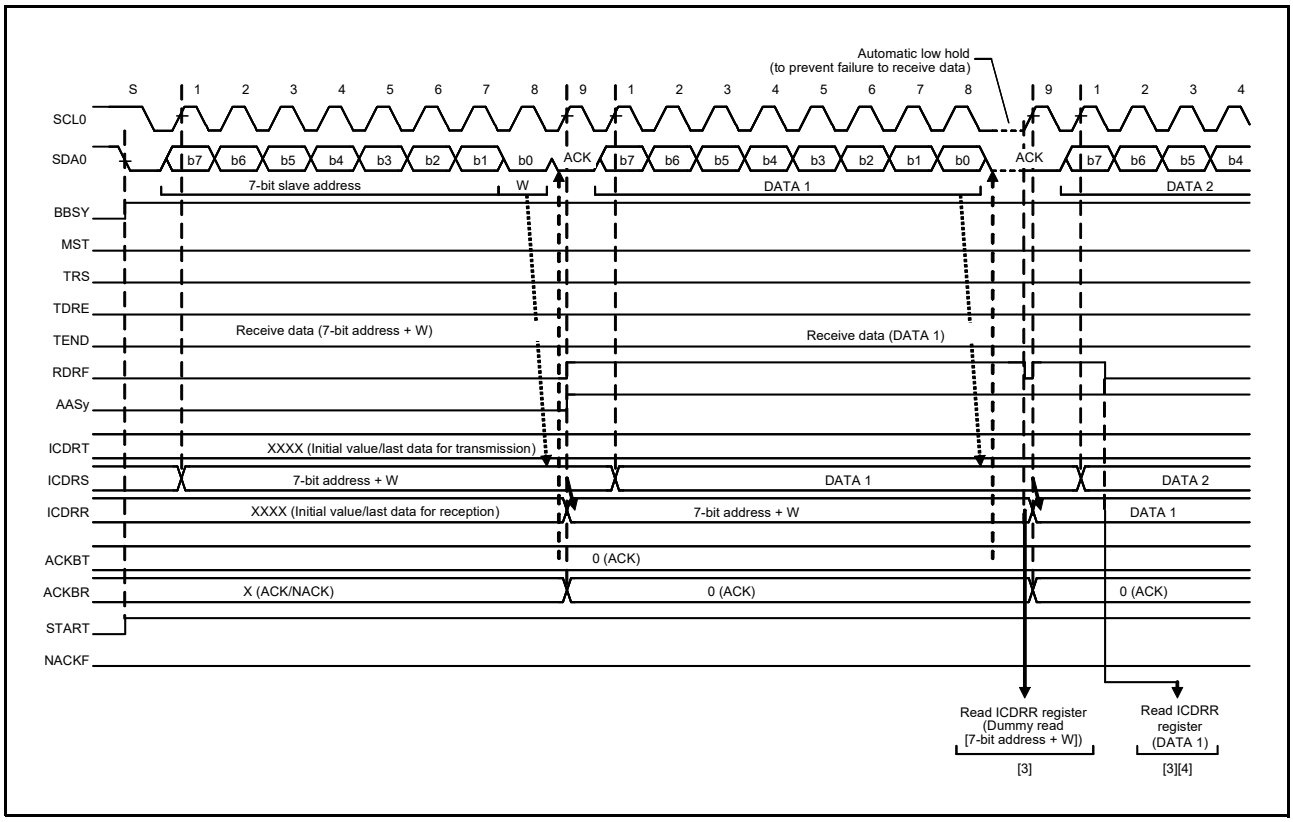

Figure 29.18 Slave Receive Operation Timing (1) (7-Bit Address Format, when RDRFS bit is 0)

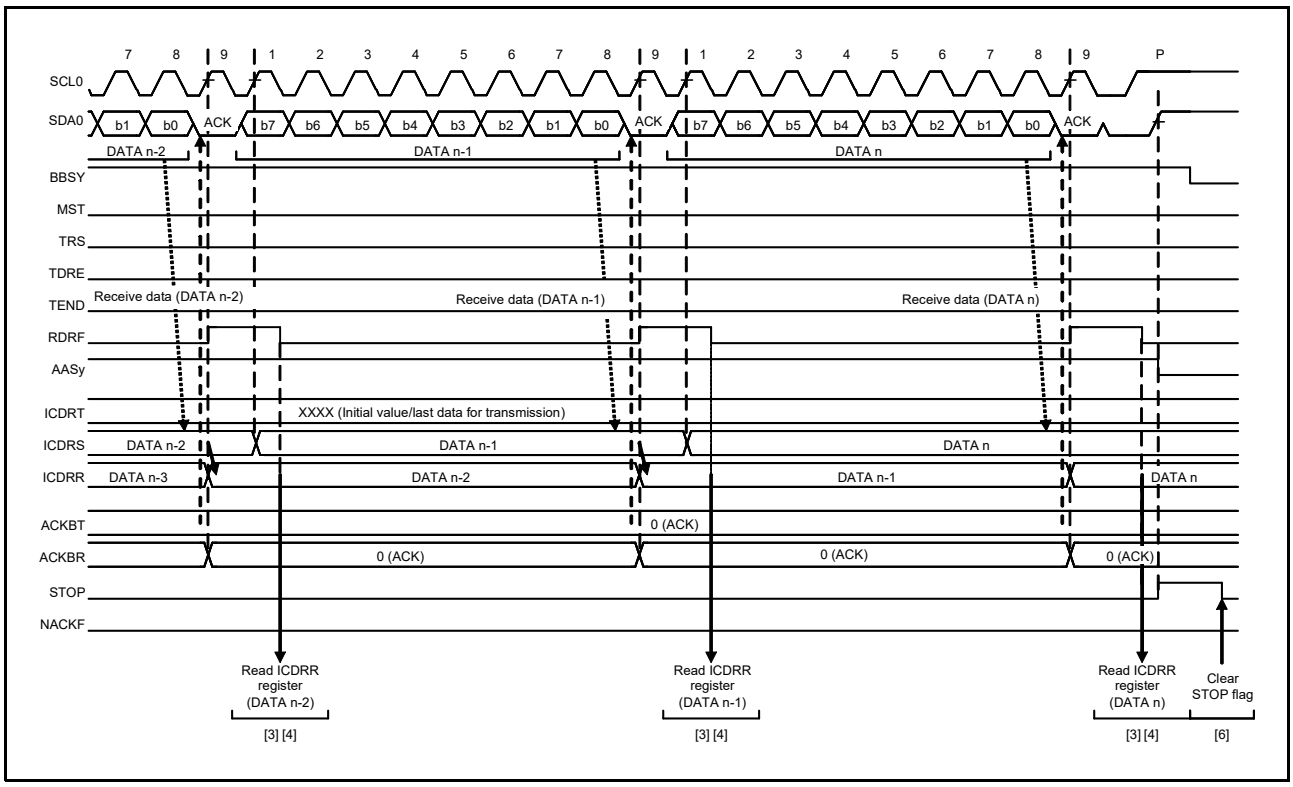

Figure 29.19 Slave Receive Operation Timing (2) (when RDRFS bit is 0)

29.4 SCL Synchronization Circuit

In generation of the SCL, the RIIC starts counting out the value for width at high level specified in the ICBRH register when it detects a rising edge on the SCL0 line and drives the SCL0 line low once counting of the width at high level is complete. When the RIIC detects the falling edge of the SCL0 line, it starts counting out the width at low period specified in the ICBRL register, and then stops driving the SCL0 line (releases the line) once counting of the width at low level is complete. The SCL is thus generated.

If multiple master devices are connected to the I2C-bus, a collision of SCL signals may arise due to contention with another master device. In such cases, the master devices have to synchronize their SCL signals. Since synchronization of the SCL signals must be handled bit by bit, the RIIC is equipped with a facility (the SCL synchronization circuit) for obtaining bit-by-bit synchronization of the SCL signals by monitoring the SCL0 line while in master mode.

When the RIIC has detected a rising edge on the SCL0 line and thus started counting out the width at high level specified in the ICBRH register, and the level on the SCL0 line falls because an SCL signal is being generated by another master device, the RIIC stops counting when it detects the falling edge, drives the level on the SCL0 line low, and starts counting out the width at low level specified in the ICBRL register. When the RIIC finishes counting out the width at low level, it stops driving the SCL0 line low (i.e. releases the line). At this time, if the width at low level of the SCL signal from the other master device is longer than the width at low level set in the RIIC, the width at low level of the SCL signal will be extended. Once the width at low level for the other master device has ended, the SCL signal rises because the SCL0 line has been released. When the RIIC finishes outputting the low period of the SCL, the SCL0 line is released and the SCL rises. That is, in cases of contention of SCL signals from more than one master, the width at high level of the SCL signal is synchronized with that of the clock having the narrower width, and the width at low level of the SCL signal is synchronized with that of the clock having the broader width. However, such synchronization of the SCL signal is only enabled when the ICFER.SCLE bit is set to 1.

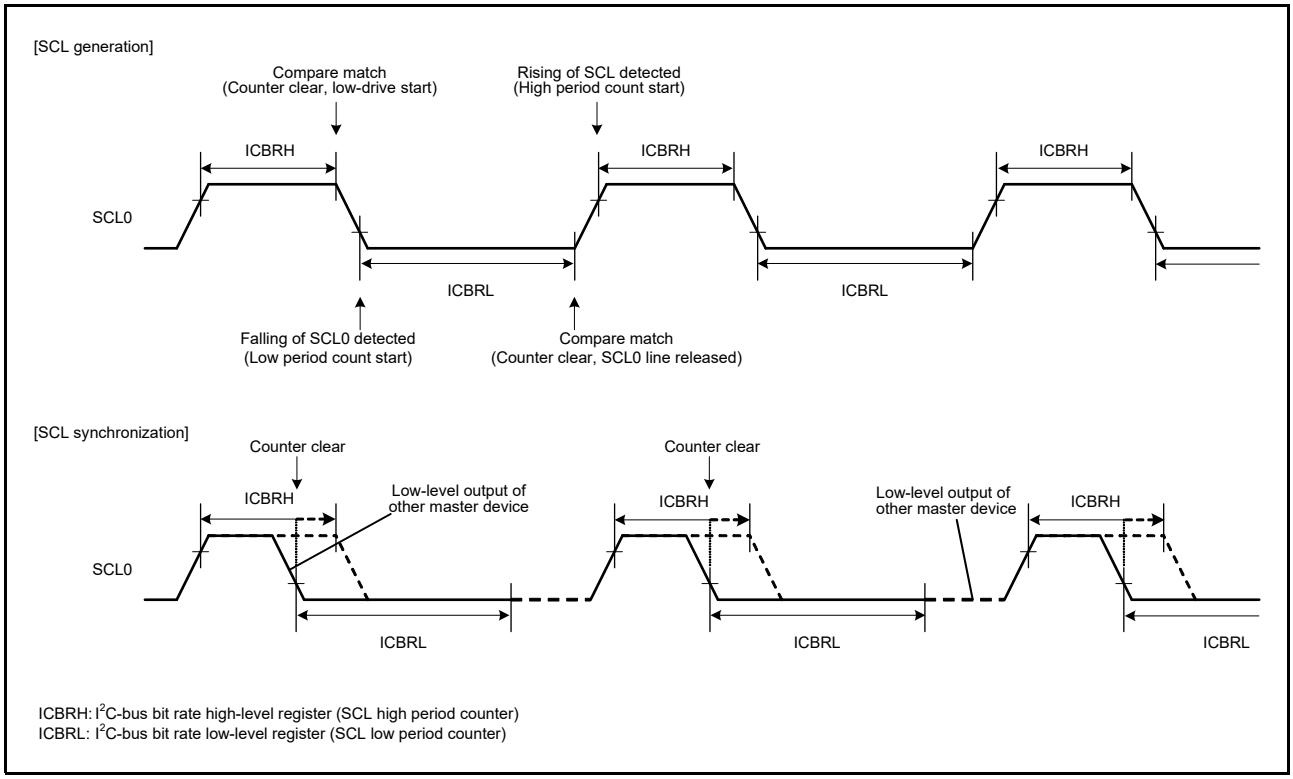

Figure 29.20 Generation and Synchronization of the SCL Signal from the RIIC

29.5 SDA Output Delay Function

The RIIC module incorporates a function for delaying output on the SDA line. The delay can be applied to all output (generation of the start, restart, and stop conditions, data, and the ACK and NACK signals) on the SDA line.
The SDA output delay function is used to delay the SDA output timing relative to falling edges of SCL to ensure that the SDA signal changes while the SCL is low and can be used to prevent erroneous operation of communications devices. This function is also used to satisfy the 300 ns (min.) data hold time prescribed by the SMBus specification.
The output delay function is enabled by setting the ICMR2.SDDL[2:0] bits to any value other than 000b, and disabled by setting the same bits to 000b.
When the SDA output delay function is enabled (the SDDL[2:0] bits are not “000b”), the SDA output delay counter counts the number of cycles set in the SDDL[2:0] bits of the count source selected by the ICMR2.DLCS bit (the internal reference clock (IICφ) or internal reference clock divided by 2 (IICφ/2)). On completion of counting of cycles of delay, the RIIC changes the bit being output as the SDA signal (generation of the start, restart, or stop condition, a new bit, or an ACK or NACK signal).

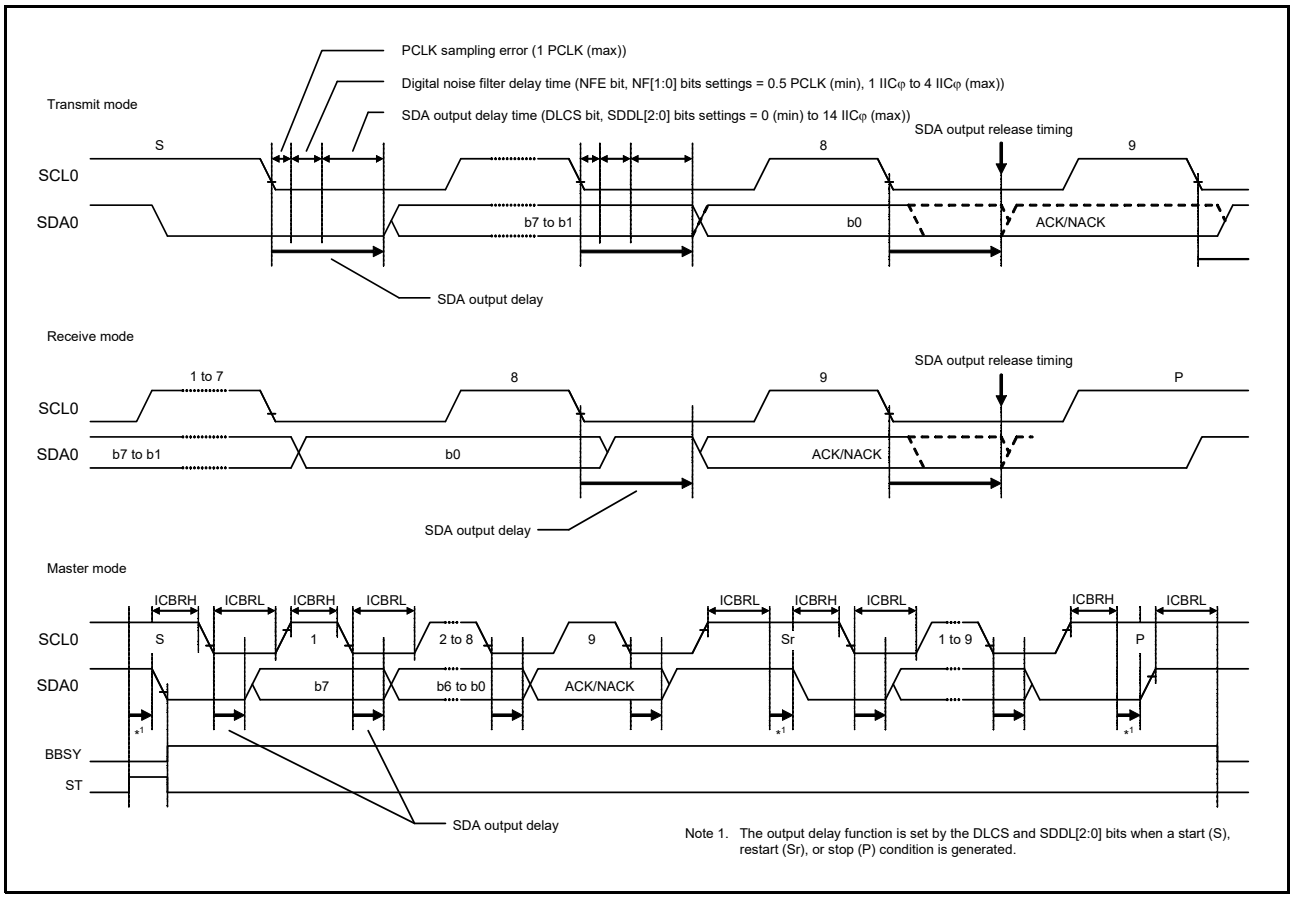

Figure 29.21 SDA Output Delay Function

29.6 Digital Noise Filters

The states of the SCL0 and SDA0 pins are conveyed to the internal circuitry through digital noise filters. Figure 29.22 is a block diagram of the digital noise filter.

The on-chip digital noise filter of each RIIC consists of four flip-flop circuit stages connected in series and a match detection circuit.

The number of effective stages in the digital noise filter is selected by the ICMR3.NF[1:0] bits. The selected number of effective stages determines the noise-filtering capability as a period from one to four cycles of IICφ.

The input signal to the SCL0 pin (or SDA0 pin) is sampled on falling edges of the IICφ signal. When the input signal level matches the output level for the number of effective flip-flop circuit stages selected by the ICMR3.NF[1:0] bits, the signal level is conveyed to the subsequent stages. If the signal levels do not match, the previous value is retained.

If the ratio between the frequency of the internal operating clock (PCLK) and the transfer rate is relatively small (e.g. data transfer at 400 kbps with PCLK = 4 MHz), the characteristics of the digital noise filter may lead to the elimination of needed signals as noise.

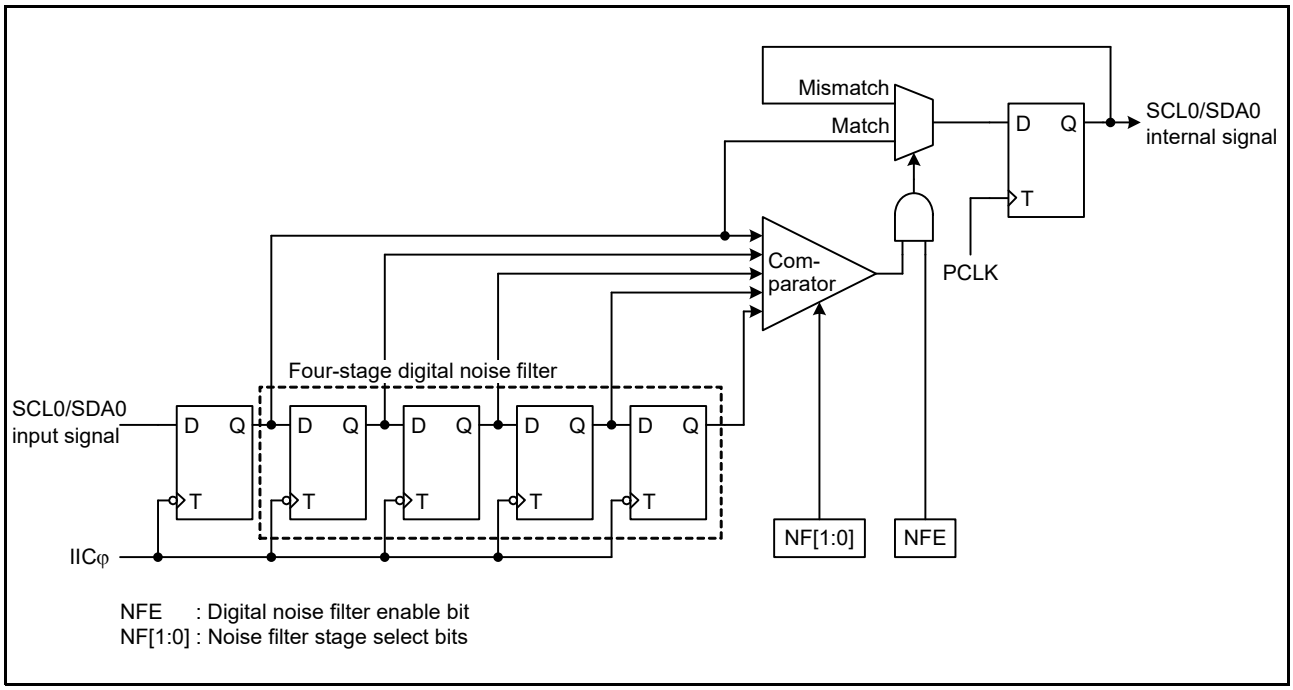

Figure 29.22 Block Diagram of the Digital Noise Filter

29.7 Address Match Detection

The RIIC can set three unique slave addresses in addition to the general call address and host address, and also can set 7-bit or 10-bit slave addresses.

29.7.1 Slave-Address Match Detection

The RIIC can set three unique slave addresses, and has a slave address detection function for each unique slave address. When the ICSER.SARyE bit (y = 0 to 2) is set to 1, the slave addresses set in registers SARUy and SARLy (y = 0 to 2) can be detected.

When the RIIC detects a match with its set slave address, the corresponding ICSR1.AASy flag (y = 0 to 2) is set to 1 on the rising edge of the ninth SCL, and the ICSR2.RDRF flag or the ICSR2.TDRE flag is set to 1 according to the level of the R/W# bit. This causes a receive data full interrupt (RXI) or transmit data empty interrupt (TXI) to be generated. The AASy flag is used to identify which slave address has been specified.

Figure 29.23 to Figure 29.25 show the AASy flag set timing in three cases.

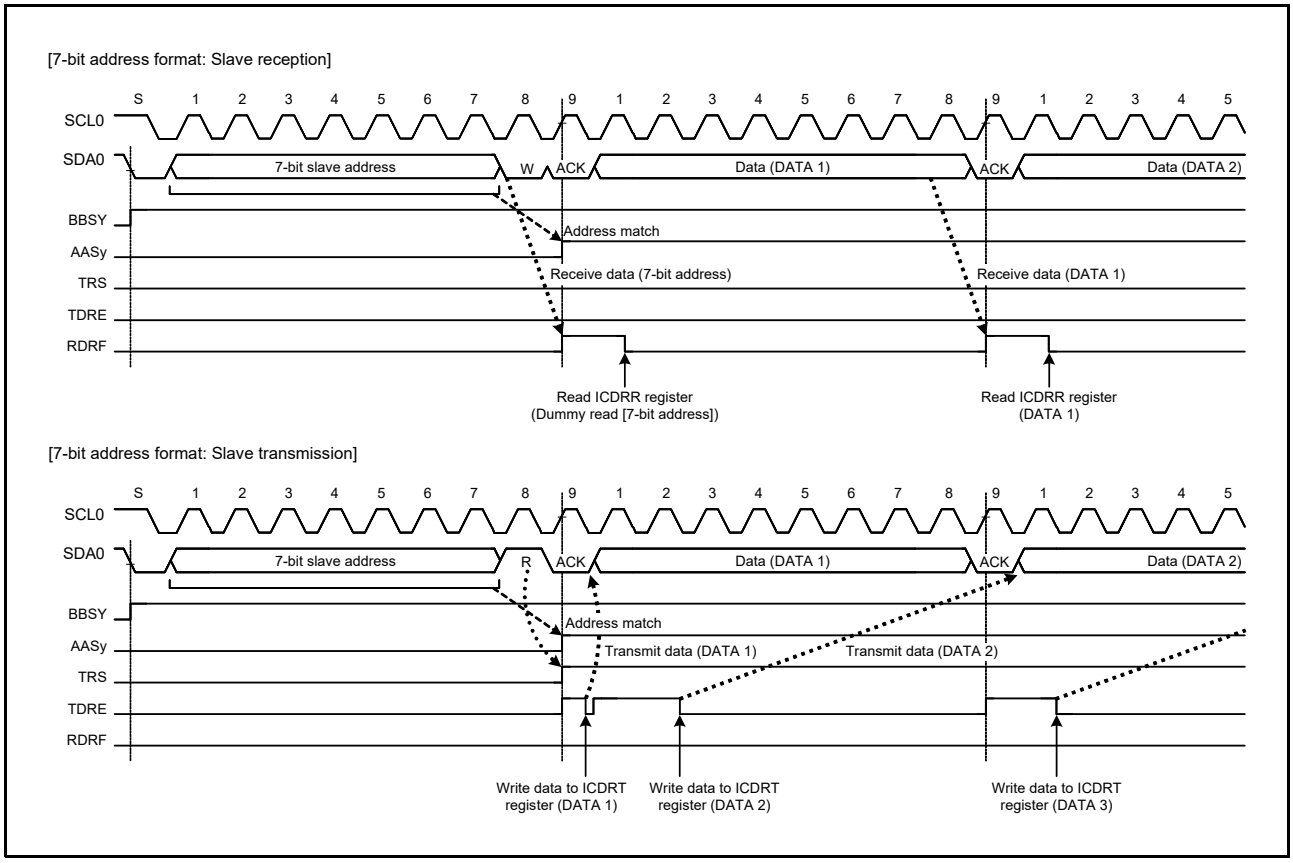

Figure 29.23 AASy Flag Set Timing with 7-Bit Address Format Selected

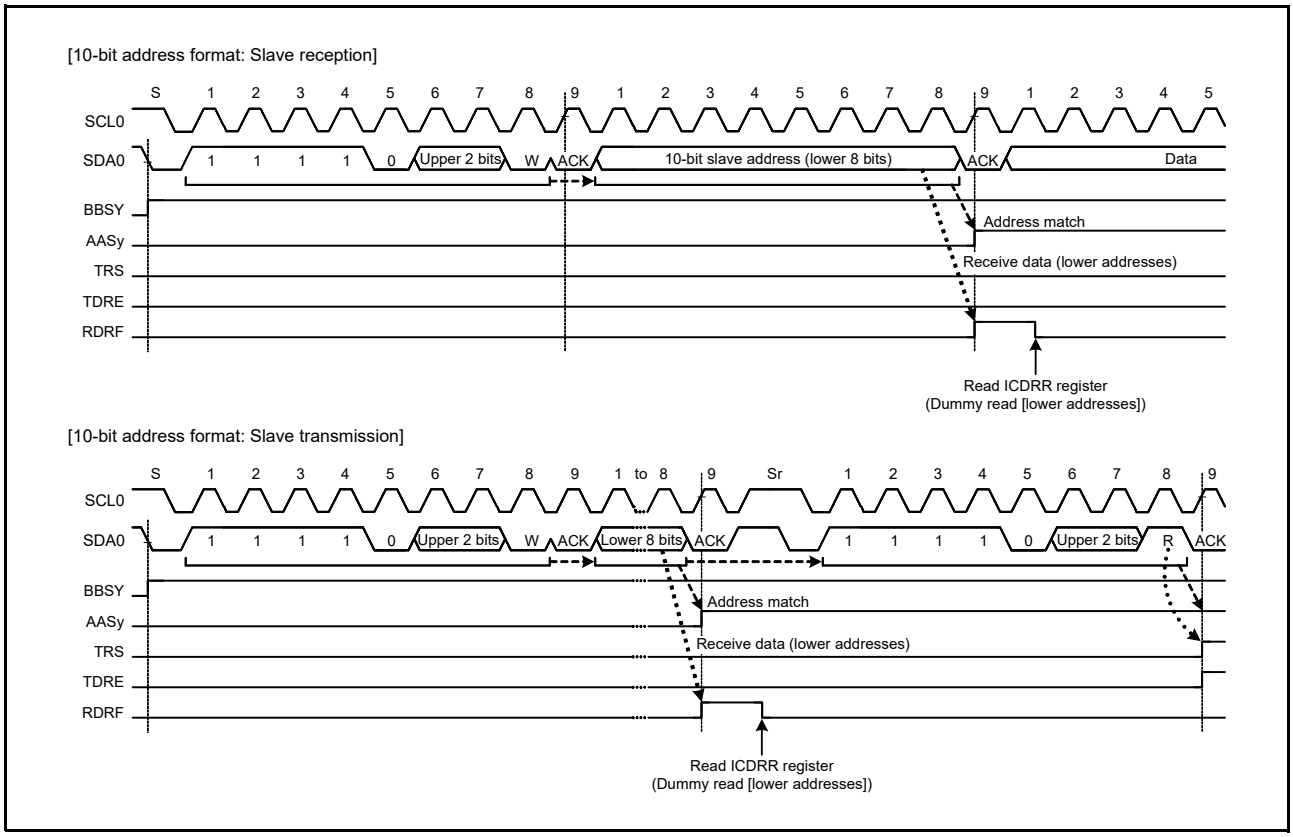

Figure 29.24 AASy Flag Set Timing with 10-Bit Address Format Selected

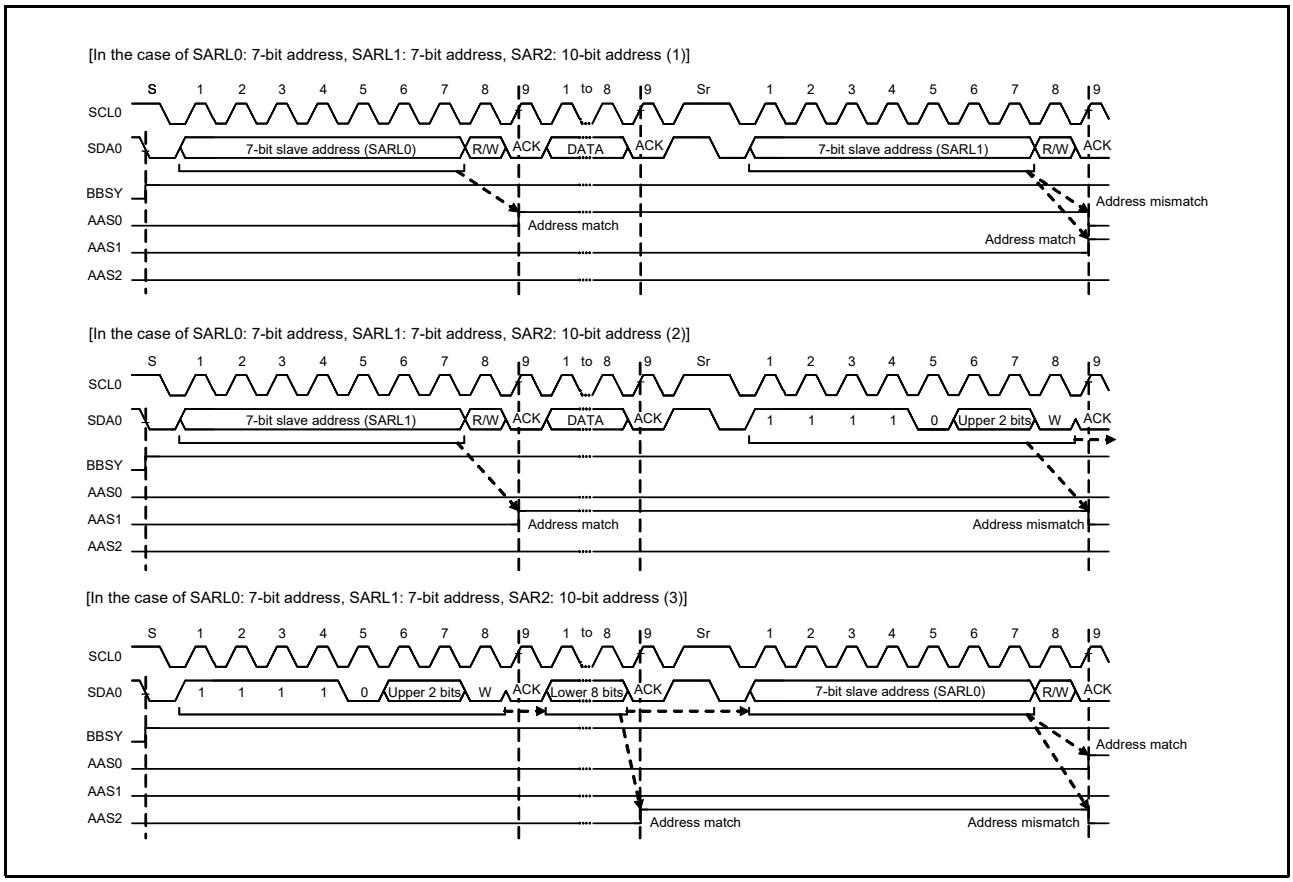

Figure 29.25 AASy Flag Set/Clear Timing with 7-Bit/10-Bit Address Formats Mixed

29.7.2 Detection of the General Call Address

The RIIC also has a facility for detecting the general call address (0000 000b + 0 (write)). This is enabled by setting the ICSER.GCAE bit to 1.

If the address following a start or restart condition is 0000 000b + 1 (read) (start byte), the RIIC recognizes this as the address of a slave device with an “all-zero” address but not as the general call address.

When the RIIC detects the general call address, both the ICSR1.GCA flag and the ICSR2.RDRF flag are set to 1 on the rising edge of the ninth SCL. This leads to the generation of a receive data full interrupt (RXI). The value of the GCA flag can be confirmed to recognize that the general call address has been transmitted.

Operation after detection of the general call address is the same as normal slave receive operation.

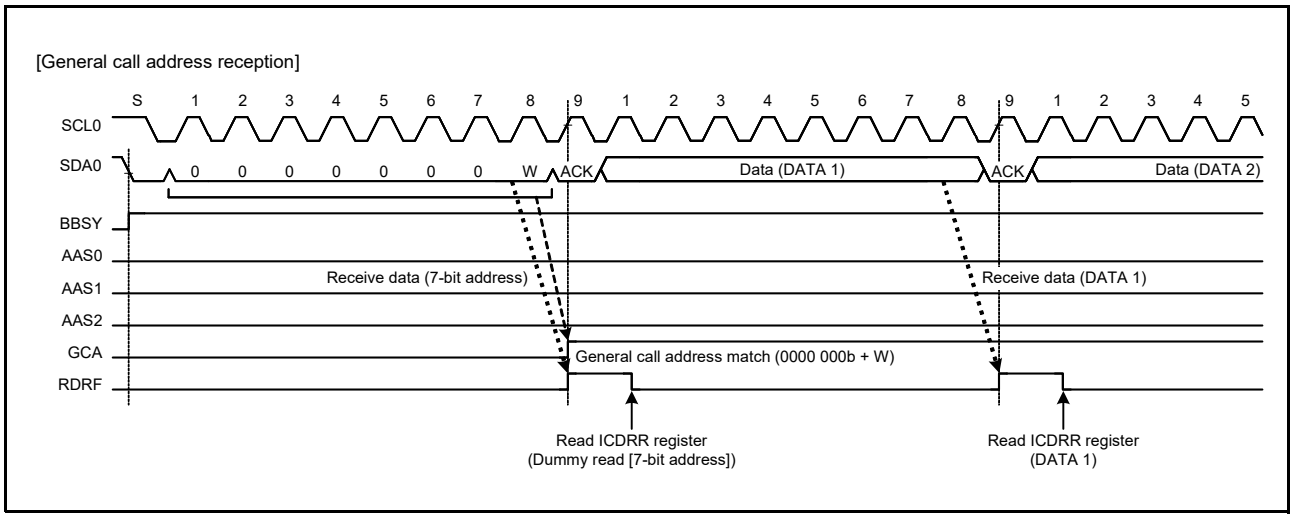

Figure 29.26 Timing of GCA Flag Setting during Reception of General Call Address

29.7.3 Device-ID Address Detection

The RIIC module has a function to detect device-ID addresses complying with the I2C-bus specification. When the RIIC receives 1111 100b as the first seven bits of the first byte following a start condition or a restart condition while the ICSER.DIDE bit is 1, the RIIC recognizes the address as a device-ID address, sets the ICSR1.DID flag to 1 on the rising edge of the ninth SCL when the following R/W# bit is 0, and then compares the second and following bytes with its own slave address. If the received address matches the value in the slave address register, the RIIC sets the corresponding ICSR1.AASy flag (y = 0 to 2) to 1.

After that, when the first byte received after a start or restart condition is generated matches the device ID address (1111 100b) again and the following R/W# bit is 1, the RIIC does not compare the second and subsequent bytes and sets the ICSR2.TDRE flag to 1.

In the device-ID address detection function, the RIIC sets the DID flag to 0 if a match with the RIIC's own slave address is not obtained or a match with the device ID address is not obtained after a match with the RIIC's own slave address and the detection of a restart condition. If the first byte after detection of a start or restart condition matches the device ID address (1111 100b) and the R/W# bit is 0, the RIIC sets the DID flag to 1 and compares the second and subsequent bytes with the RIIC's slave address. If the R/W# bit is 1, the DID flag holds the previous value and the RIIC does not compare the second and subsequent bytes. Therefore, the reception of a device-ID address can be checked by reading the DID flag after confirming that TDRE flag is 1.

Furthermore, prepare the device-ID fields (3 bytes: 12 bits indicating the manufacturer + 9 bits identifying the part + 3 bits indicating the revision) that must be sent to the host after reception of a continuous device-ID field as normal data for transmission. For details of the information that must be included in device-ID fields, contact NXP Semiconductors.

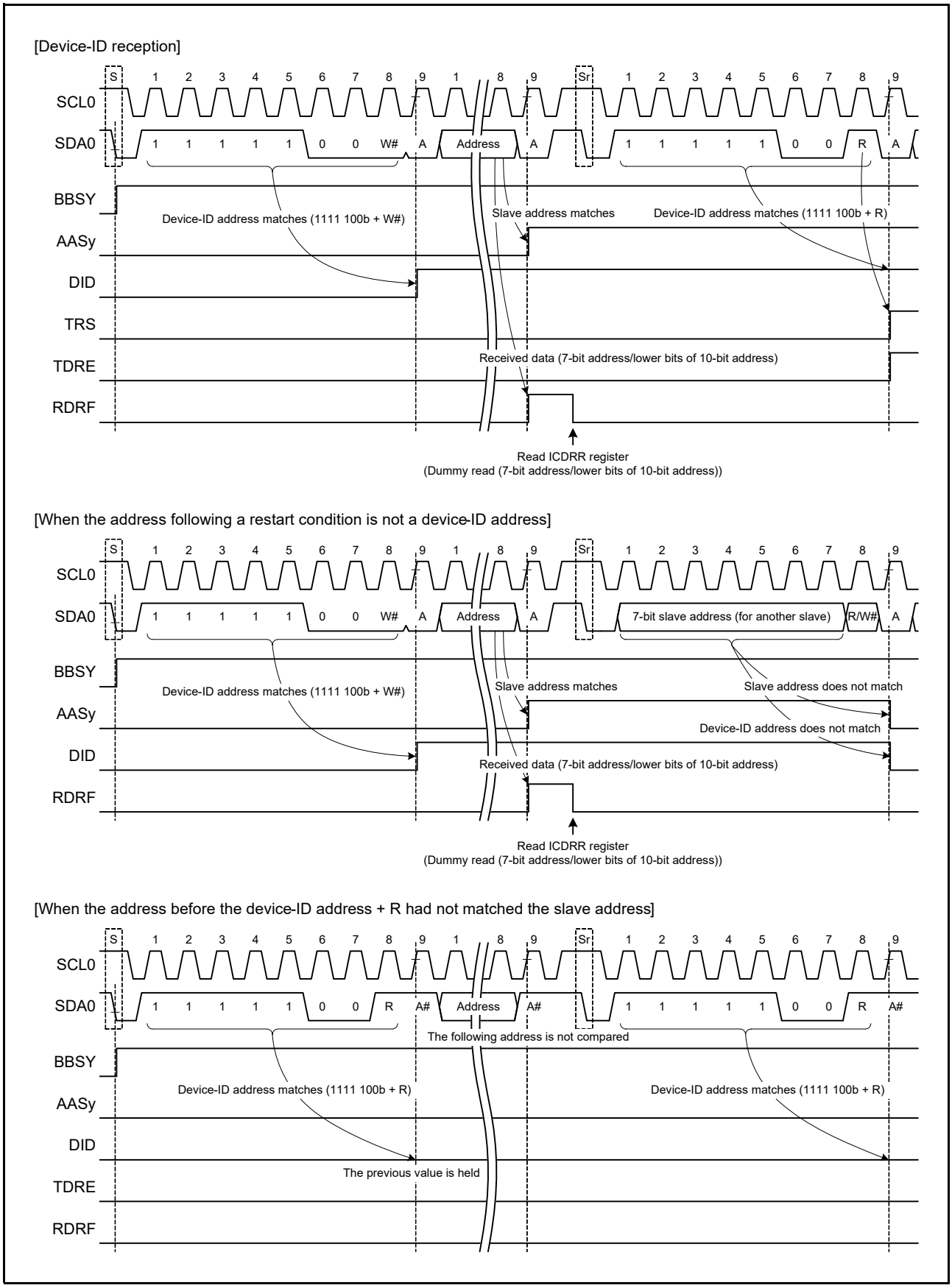

Figure 29.27 Set/Clear Timing of the AASy and DID Flags during Reception of Device-ID Address

29.7.4 Host Address Detection

The RIIC has a function to detect the host address while the SMBus is operating. When the ICSER.HOAE bit is set to 1 while the ICMR3.SMBS bit is 1, the RIIC can detect the host address (0001 000b) in slave receive mode (bits MST and TRS in the ICCR2 register are 00b).

When the RIIC detects the host address, the ICSR1.HOA flag is set to 1 at the rising edge of the ninth SCL, and at the same time, the ICSR2.RDRF flag is set to 1 when the R/W# bit is 0 (Wr bit). This causes a receive data full interrupt (RXI) to be generated. The HOA flag is used to recognize that the host address was sent from the smart battery or other devices.

If the bit following the host address (0001 000b) is an Rd bit (R/W# bit is 1), the RIIC can also detect the host address. After the host address is detected, the RIIC operates in the same manner as normal slave operation.

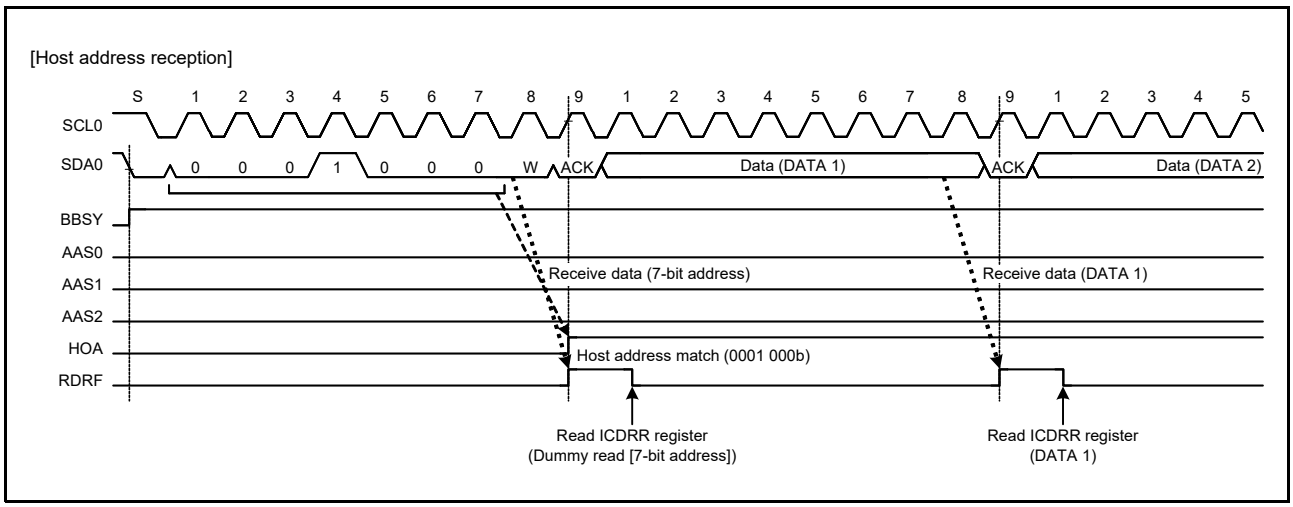

Figure 29.28 HOA Flag Set Timing during Reception of Host Address

29.8 Automatic Low-Hold Function for SCL

29.8.1 Function to Prevent Wrong Transmission of Transmit Data

If the shift register (ICDRS) is empty when data have not been written to the I2C-bus transmit data register (ICDRT) with the RIIC in transmission mode (ICCR2.TRS bit is 1), the SCL0 line is automatically held low over the intervals shown below. This low period is extended until data for transmission have been written, which prevents the unintended transmission of erroneous data.

Master transmit mode

- Low period after a start condition or restart condition is generated
- Low period between the ninth clock pulse of one transfer and the first clock pulse of the next

Slave transmit mode

- Low period between the ninth clock pulse of one transfer and the first clock pulse of the next

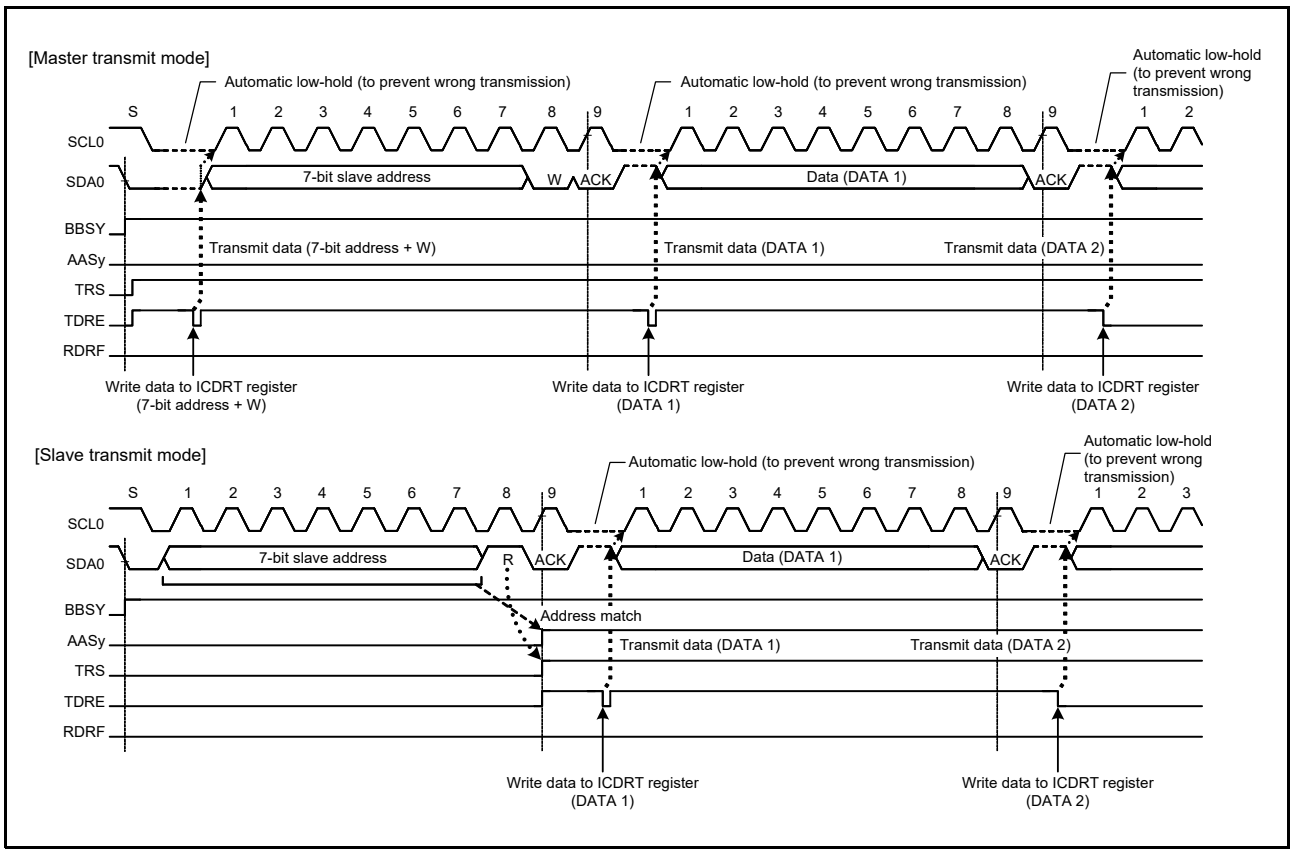

Figure 29.29 Automatic Low-Hold Operation in Transmit Mode

29.8.2 NACK Reception Transfer Suspension Function

The RIIC has a function to suspend transfer operation when NACK is received in transmit mode (ICCR2.TRS bit is 1). This function is enabled when the ICFER.NACKE bit is set to 1 (transfer suspension enabled). If the next transmit data has already been written (ICSR2.TDRE flag is 0) when NACK is received, next data transmission at the falling edge of the ninth SCL is automatically suspended. This prevents the SDA0 line output level from being held low when the MSB of the next transmit data is 0.

If the data transmission is suspended (ICSR2.NACKF flag is 1) by this function, the following data transmission and data reception are not started. To resume data transfer, set the NACKF flag to 0. In master transmit mode, restart data transfer by setting the NACKF flag to 0 after generating a restart condition, or restart data transfer from a start condition after generating a stop condition then setting the NACKF flag to 0.

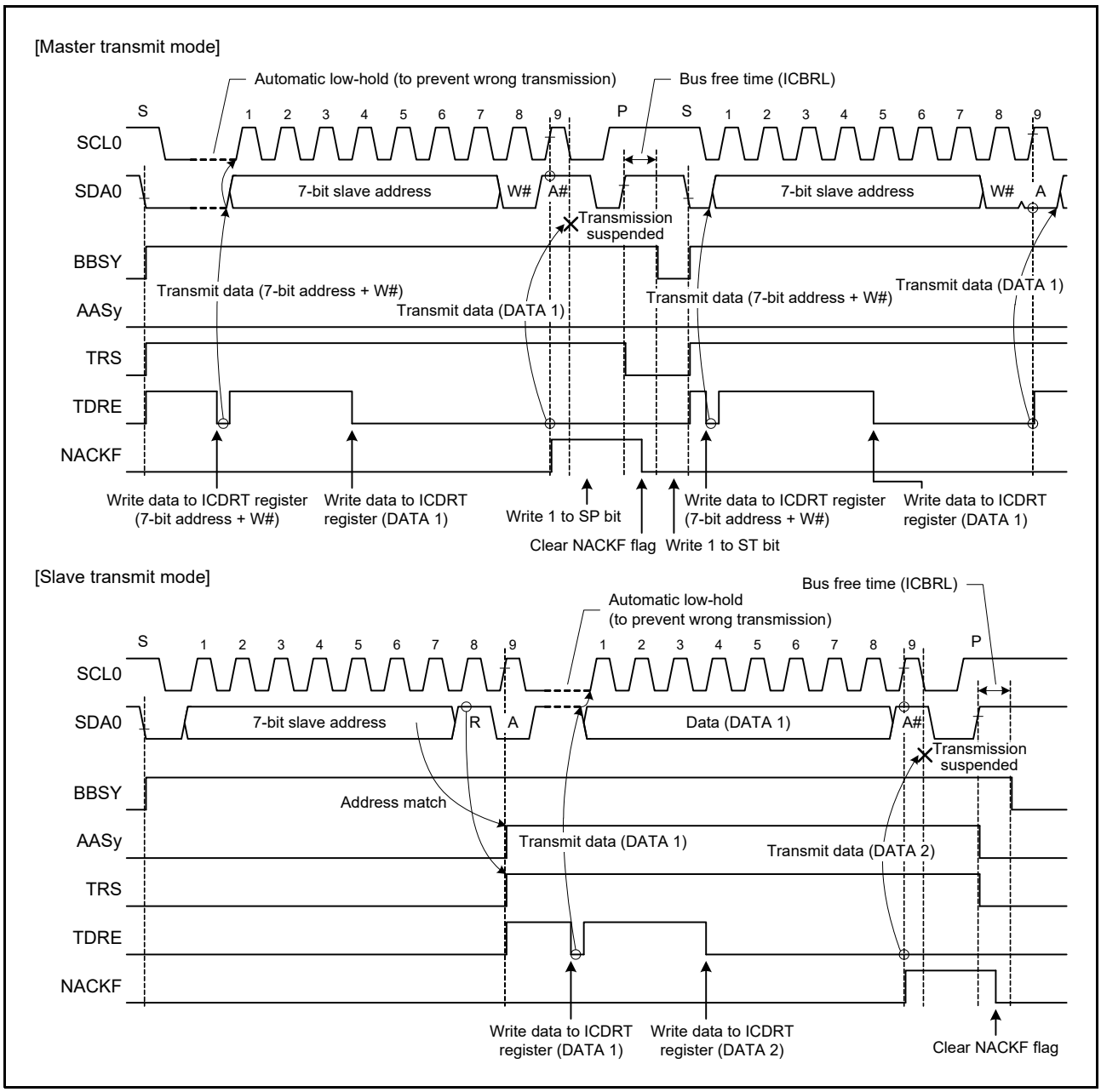

Figure 29.30 Suspension of Data Transmission When NACK is Received (NACKE = 1)

29.8.3 Function to Prevent Failure to Receive Data

If response processing is delayed when receive data (ICDRR) read is delayed for a period of one transfer byte or more with receive data full (ICSR2.RDRF flag is 1) in receive mode (ICCR2.TRS bit is 0), the RIIC holds the SCL0 line low automatically immediately before the next data is received to prevent failure to receive data.
This function to prevent failure to receive data using the automatic low-hold function is also enabled even if the read processing of the final receive data is delayed and, in the meantime, the RIIC's own slave address is designated after a stop condition is generated. This function does not disturb other communication because the RIIC does not hold the SCL0 line low when a mismatch with its own slave address occurs after a stop condition is generated.
Sections in which the SCL0 line is held low can be selected with a combination of the WAIT and RDRFS bits in the ICMR3 register.

(1) 1-Byte Receive Operation and Automatic Low-Hold Function Using the WAIT Bit

When the ICMR3.WAIT bit is set to 1, the RIIC performs 1-byte receive operation using the WAIT bit function. Furthermore, when the ICMR3.RDRFS bit is 0, the RIIC automatically sends the ICMR3.ACKBT bit value for the acknowledgment bit in the period from the falling edge of the eighth SCL to the falling edge of the ninth SCL, and automatically holds the SCL0 line low at the falling edge of the ninth SCL using the WAIT bit function. This low-hold is released by reading data from the ICDRR register, which enables bytewise receive operation.
The WAIT bit function is enabled for receive bytes after a match with the RIIC's own slave address (including the general call address and host address) is obtained in master receive mode or slave receive mode.

(2) 1-Byte Receive Operation (ACK/NACK Transmission Control) and Automatic Low-Hold Function Using the RDRFS Bit

When the ICMR3.RDRFS bit is set to 1, the RIIC performs 1-byte receive operation using the RDRFS bit function. When the RDRFS bit is set to 1, the ICSR2.RDRF flag (receive data full) is set to 1 at the rising edge of the eighth SCL, and the SCL0 line is automatically held low at the falling edge of the eighth SCL. This low-hold is released by writing a value to the ICMR3.ACKBT bit, but cannot be released by reading data from the ICDRR register, which enables receive operation by the ACK/NACK transmission control according to the data received in byte units.
The RDRFS bit function is enabled for receive bytes after a match with the RIIC's own slave address (including the general call address and host address) is obtained in master receive mode or slave receive mode.

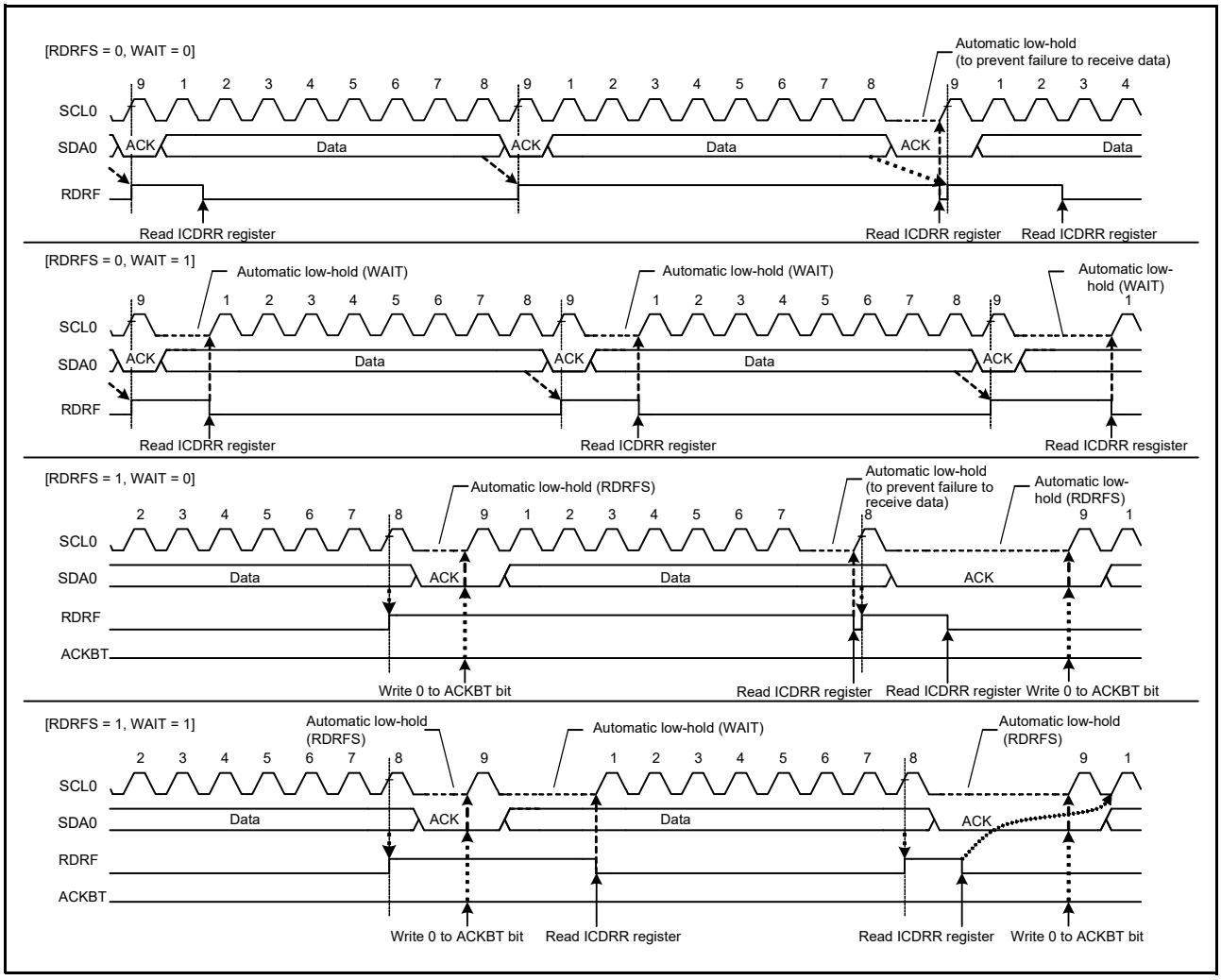

Figure 29.31 Automatic Low-Hold Operation in Receive Mode (Using RDRFS and WAIT Bits)

29.9 Arbitration-Lost Detection Functions

In addition to the normal arbitration-lost detection function defined by the I2C-bus specification, the RIIC has functions to prevent double-generation of a start condition, to detect arbitration-lost during transmission of NACK, and to detect arbitration-lost in slave transmit mode.

29.9.1 Master Arbitration-Lost Detection (MALE Bit)

The RIIC drives the SDA0 line low to generate a start condition. However, if the SDA0 line has already been driven low by another master device generating a start condition, the RIIC causes arbitration to be lost, so priority is given to transfer by the other master device. Similarly, if the ICCR2.ST bit is set to 1 while the ICCR2.BBSY flag is 1 (bus busy state), arbitration is lost, so priority is given to transfer by the other master device. No start condition is generated in this case.
When a start condition is generated successfully, if the data for transmission including the address bits (i.e. the internal SDA output level) and the level on the SDA0 line do not match (the high output as the internal SDA output; i.e. the SDA0 pin is in the high-impedance state) and the low is detected on the SDA0 line, the RIIC loses the arbitration.
After a master arbitration-lost is generated, the RIIC immediately enters slave receive mode. If a slave address (including the general call address) matches its own address at this time, the RIIC continues in slave operation.
A master arbitration-lost is detected when the following conditions are met while the ICFER.MALE bit is 1 (master arbitration-lost detection enabled).

Conditions for detecting master arbitration-lost

- Non-matching of the internal level for output on SDA and the level on the SDA0 line after a start condition was generated by setting the ICCR2.ST bit to 1 while the ICCR2.BBSY flag was set to 0 (erroneous generation of a start condition)
- Setting of the ICCR2.ST bit to 1 while the BBSY flag is set to 1 (start condition double-generation error)
- When the transmit data excluding acknowledgment bit (internal SDA output level) does not match the level on the SDA0 line in master transmit mode (bits MST and TRS in the ICCR2 register = 11b)

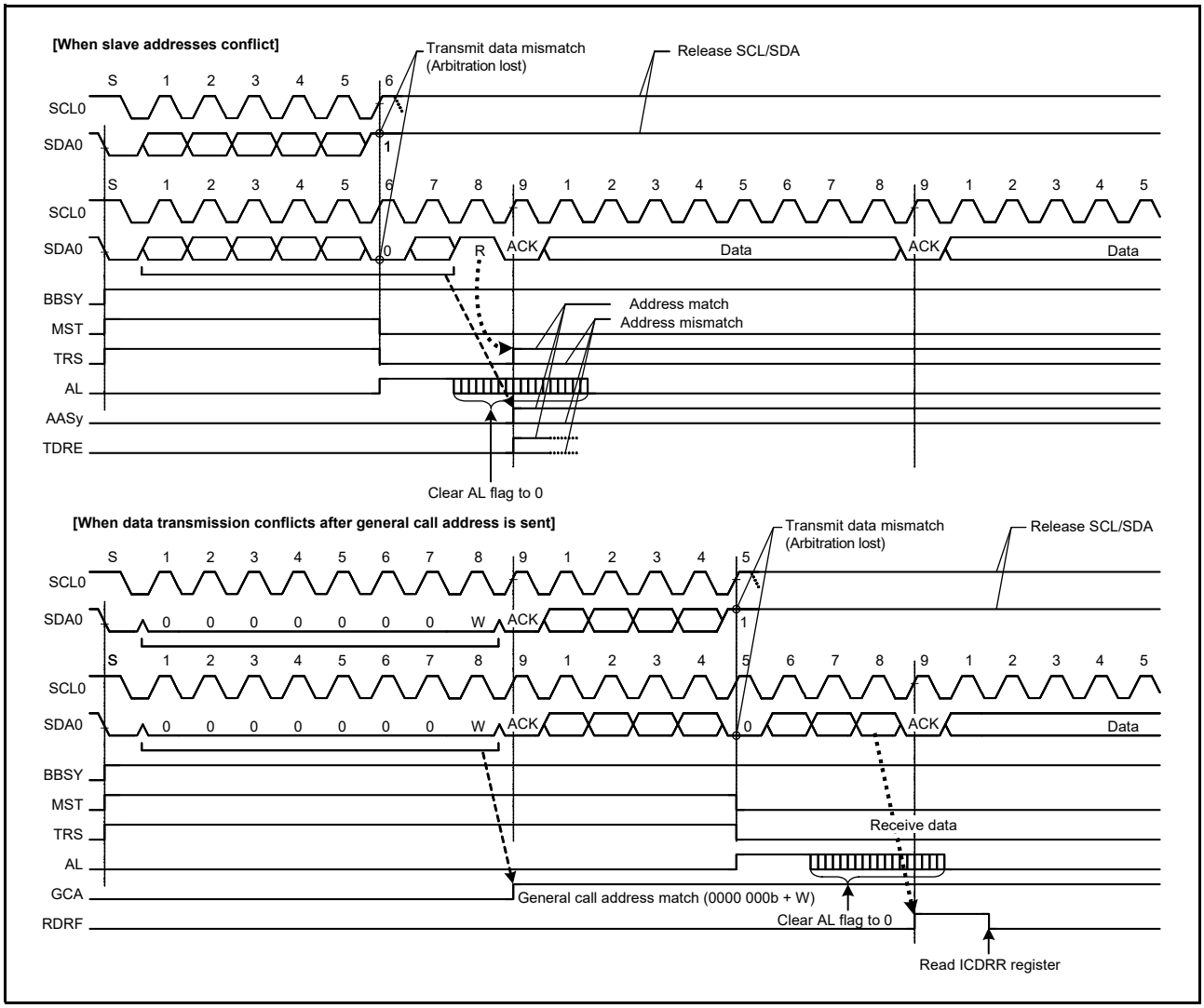

Figure 29.32 Examples of Master Arbitration-Lost Detection (MALE = 1)

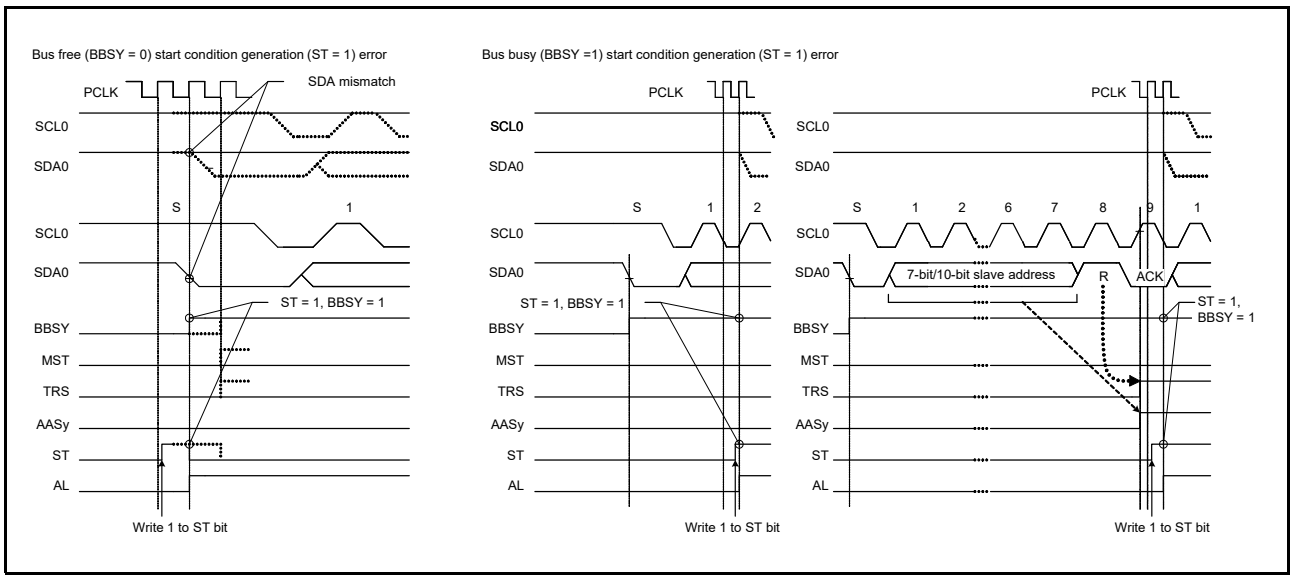

Figure 29.33 Arbitration-Lost When a Start Condition is Generated (MALE = 1)

29.9.2 NACK Transmission Arbitration-Lost Detection Function (NALE Bit)

The RIIC has a function to cause arbitration to be lost if the internal SDA output level does not match the level on the SDA0 line (the high output as the internal SDA output; i.e. the SDA0 pin is in the high-impedance state) and the low is detected on the SDA0 line during transmission of NACK in receive mode. Arbitration is lost due to a conflict of NACK transmission and ACK transmission when two or more master devices receive data from the same slave device simultaneously in a multi-master system. Such conflict occurs when multiple master devices send/receive the same information through a single slave device. Figure 29.34 shows an example of NACK transmission arbitration-lost detection.

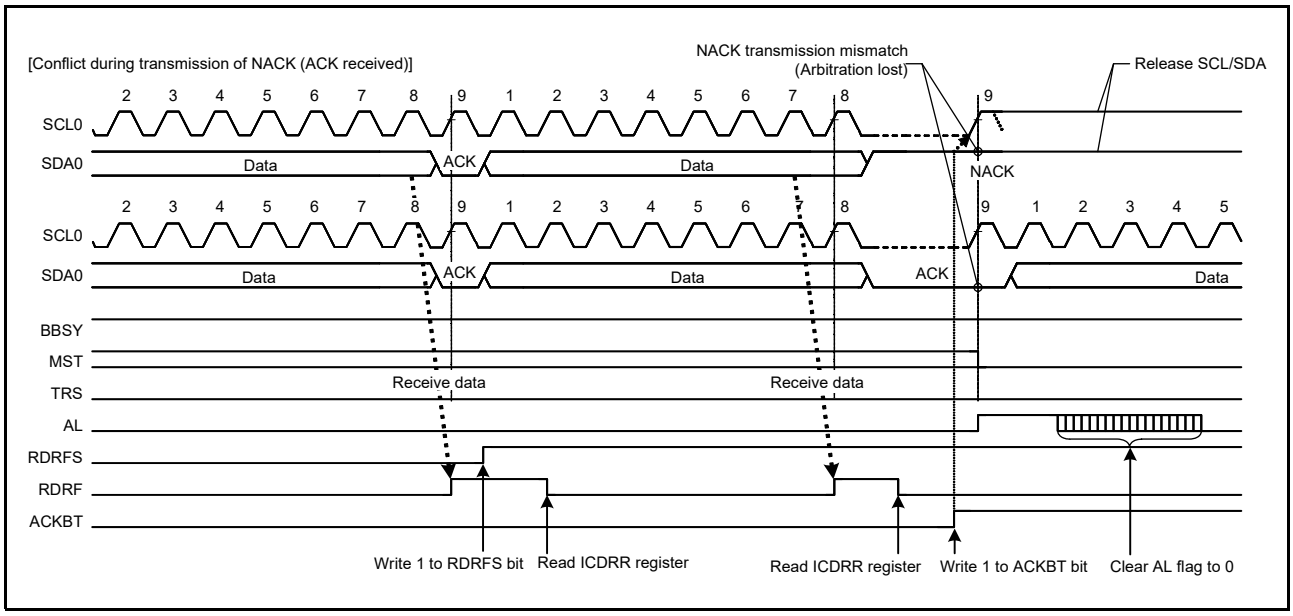

Figure 29.34 Example of NACK transmission arbitration-lost Detection (NALE = 1)

The following explains arbitration-lost detection using an example where two master devices (master A and master B) and a single slave device are connected through the bus. In this example, master A receives two bytes of data from the slave device, and master B receives four bytes of data from the slave device.

If master A and master B access the slave device simultaneously, because the slave address is identical, arbitration is not lost in both master A and master B during access to the slave device. Therefore, both master A and master B recognize that they have obtained the bus mastership and operate as such. Here, master A sends NACK when it has received second byte of data from the slave device. Meanwhile, master B sends ACK because it has not received necessary four bytes of data. At this time, the NACK transmission from master A and the ACK transmission from master B conflict. In general, if a conflict like this occurs, master A cannot detect ACK transmitted by master B and generates a stop condition. Therefore, the generation of the stop condition conflicts with the SCL output of master B, which disturbs communication.

When the RIIC receives ACK during transmission of NACK, it detects a defeat in conflict with other master devices and causes arbitration to be lost.

If a NACK transmission arbitration-lost occurs, the RIIC immediately cancels the slave address matched state and enters slave receive mode. This prevents a stop condition from being generated, preventing a communication failure on the bus. Also, in the ARP command processing of SMBus, it is possible to omit surplus processing (FFh transmission processing) after NACK transmission when the UDID (Unique Device Identifier) of “Assign Address” does not match and after the NACK transmission of the “Get UDID (General)” after the “Assign Address” is confirmed.

The RIIC detects NACK transmission arbitration-lost when the following condition is met with the ICFER.NALE bit set to 1 (NACK transmission arbitration-lost is enabled).

Condition for detecting NACK transmission arbitration-lost

- When the internal SDA output level does not match the SDA0 line (ACK is received) during transmission of NACK (ICMR3.ACKBT bit = 1)

29.9.3 Slave Arbitration-Lost Detection (SALE Bit)

The RIIC has a function to cause arbitration to be lost if the data for transmission (i.e. the internal SDA output level) and the level on the SDA0 line do not match (the high output as the internal SDA output; i.e. the SDA0 pin is in the high-impedance state and the low is detected on the SDA0 line in slave transmit mode). The slave arbitration-lost detection function is mainly used when transmitting a UDID (Unique Device Identifier) of SMBus.
When the slave arbitration-lost occurs, the RIIC is immediately released from the slave address matched state and enters slave receive mode. This function can detect a data conflict during UDID transmission of SMBus and omit surplus processing (FFh transmission processing) after the data conflict.
The RIIC detects slave arbitration-lost when the following condition is met with the ICFER.SALE bit set to 1 (slave arbitration-lost detection enabled).

Condition for detecting slave arbitration-lost

- When transmit data excluding acknowledgment bit (internal SDA output level) does not match the SDA0 line in slave transmit mode (bits MST and TRS in the ICCR2 register are 01b)

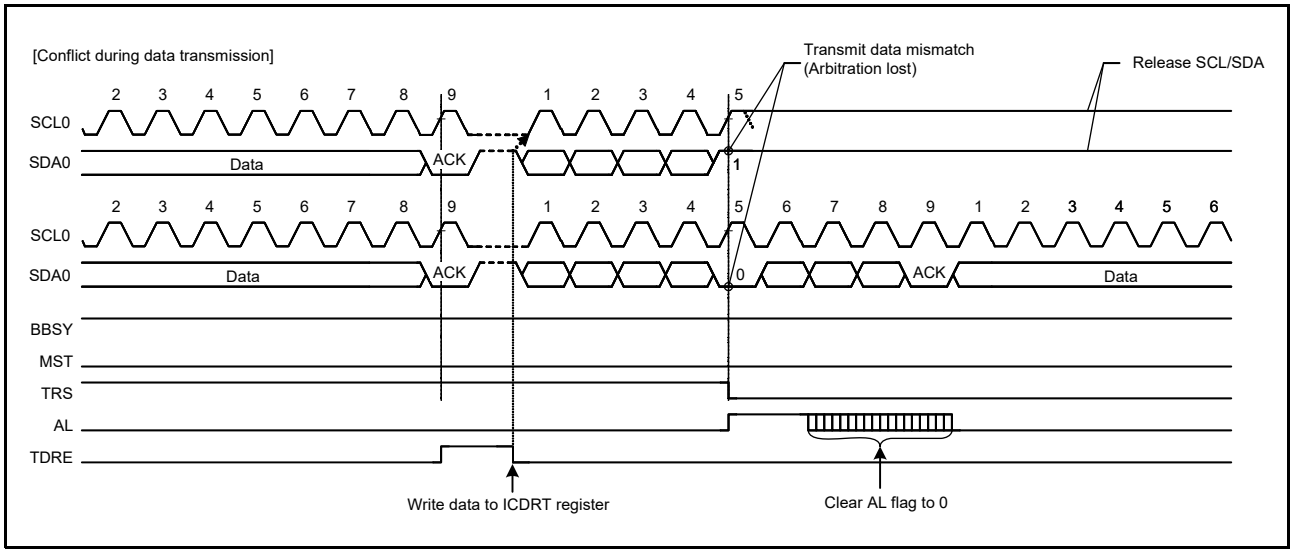

Figure 29.35 Example of Slave Arbitration-Lost Detection (SALE = 1)

29.10 Start Condition/Restart Condition/Stop Condition Generating Function

29.10.1 Generating a Start Condition

The RIIC generates a start condition when the ICCR2.ST bit is set to 1.
When the ST bit is set to 1, a start condition generation request is made and the RIIC generates a start condition when the ICCR2.BBSY flag is 0 (bus free state). When a start condition is generated normally, the RIIC automatically shifts to the master transmit mode.
A start condition is generated in the following sequence.

Start condition generation

(1) Drive the SDA0 line low (high to low).
(2) Secure the time set in the ICBRH register and the start condition hold time.
(3) Drive the SCL0 line low (high to low).
(4) Detect the low level on the SCL0 line and secure the low period of the signal on the SCL0 line set in the ICBRL register.

29.10.2 Generating a Restart Condition

The RIIC generates a restart condition when the ICCR2.RS bit is set to 1.
When the RS bit is set to 1, a restart condition generation request is made and the RIIC generates a restart condition when the ICCR2.BBSY flag is 1 (bus busy state) and the ICCR2.MST bit is 1 (master mode).
A restart condition is generated in the following sequence.

Restart condition generation

(1) Release the SDA0 line.
(2) Secure the low period of the signal on the SCL0 line set in the ICBRL register.
(3) Release the SCL0 line (low to high).
(4) Detect the high level on the SCL0 line and secure the time set in the ICBRL register and the restart condition setup time.
(5) Drive the SDA0 line low (high to low).
(6) Secure the time set in the ICBRH register and the restart condition hold time.
(7) Drive the SCL0 line low (high to low).
(8) Detect the low level on the SCL0 line and secure the low period of the signal on the SCL0 line set in the ICBRL register.

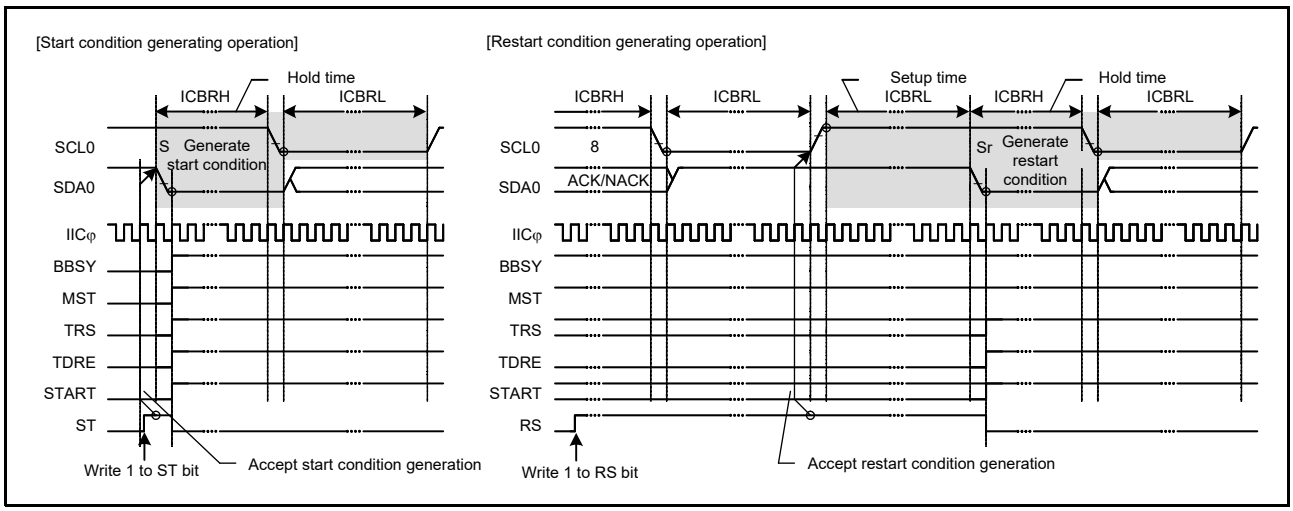

Figure 29.36 Start Condition/Restart Condition Generation Timing (ST and RS Bits)

29.10.3 Generating a Stop Condition

The RIIC generates a stop condition when the ICCR2.SP bit is set to 1.
When the SP bit is set to 1, a stop condition generation request is made and the RIIC generates a stop condition when the ICCR2.BBSY flag is 1 (bus busy state) and the ICCR2.MST bit is 1 (master mode).
A stop condition is generated in the following sequence.

Stop condition generation

(1) Drive the SDA0 line low (high to low).
(2) Secure the low period of the signal on the SCL0 line set in the ICBRL register.
(3) Release the SCL0 line (low to high).
(4) Detect the high level on the SCL0 line and secure the time set in the ICBRH register and the stop condition setup time.
(5) Release the SDA0 line (low to high).
(6) Secure the time set in the ICBRL register and the bus free time.
(7) Set the BBSY flag to 0 (to release the bus mastership).

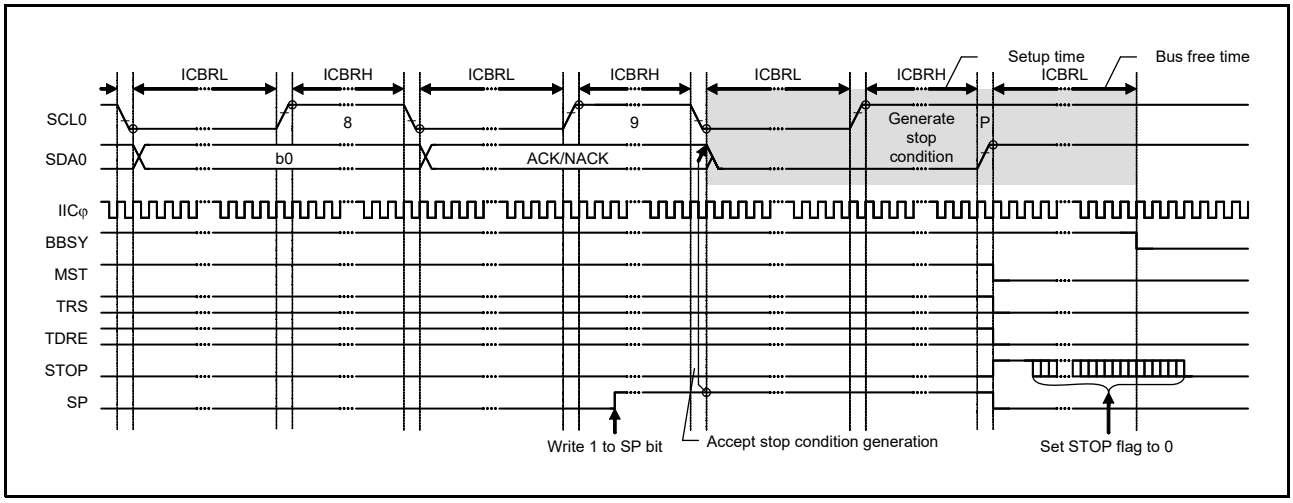

Figure 29.37 Stop Condition Generation Timing (SP Bit)

29.11 Bus Hanging

If the clock signals from the master and slave devices go out of synchronization due to noise or other factors, the I2C-bus might hang with a fixed level on the SCL0 line and/or SDA0 line.
As measures against the bus hanging, the RIIC has a timeout function to detect hanging by monitoring the SCL0 line, a function for the output of an additional SCL to release the bus from a hung state due to clock signals being out of synchronization, the RIIC reset function, and internal reset function.
By checking bits SCLO, SDAO, SCLI, and SDAI in the ICCR1 register, it is possible to see whether the RIIC or its partner in communications is placing the low level on the SCL0 or SDA0 lines.

29.11.1 Timeout Function

The RIIC includes a timeout function for detecting when the SCL0 line has been stuck longer than the predetermined time. The RIIC can detect an abnormal bus state by monitoring that the SCL0 line is stuck low or high for a predetermined time.
The timeout function monitors the SCL0 line state and counts the low period or high period using the internal counter. The timeout function resets the internal counter each time the SCL0 line changes (rising or falling), but continues to count unless the SCL0 line changes. If the internal counter overflows due to no SCL0 line change, the RIIC can detect the timeout and report the bus hung state.
This timeout function is enabled when the ICFER.TMOE bit is 1. It detects a hung state that the SCL0 line is stuck low or high during the following conditions:

- The bus is busy (ICCR2.BBSY flag is 1) in master mode (ICCR2.MST bit is 1).
- The RIIC's own slave address is detected (ICSR1 register is not 00h) and the bus is busy (ICCR2.BBSY flag is 1) in slave mode (ICCR2.MST bit is 0).
- The bus is free (ICCR2.BBSY flag is 0) while generation of a start condition is requested (ICCR2.ST bit is 1).

The internal counter of the timeout function works using the internal reference clock (IICφ) set by the ICMR1.CKS[2:0] bits as a count source. It functions as a 16-bit counter when long mode is selected (ICMR2.TMOS bit is 0) or a 14-bit counter when short mode is selected (TMOS bit is 1).
The SCL0 line level (low/high or both levels) during which this counter is activated can be selected by the setting of bits TMOH and TMOL in the ICMR2 register. If both bits TMOL and TMOH are set to 0, the internal counter does not work.

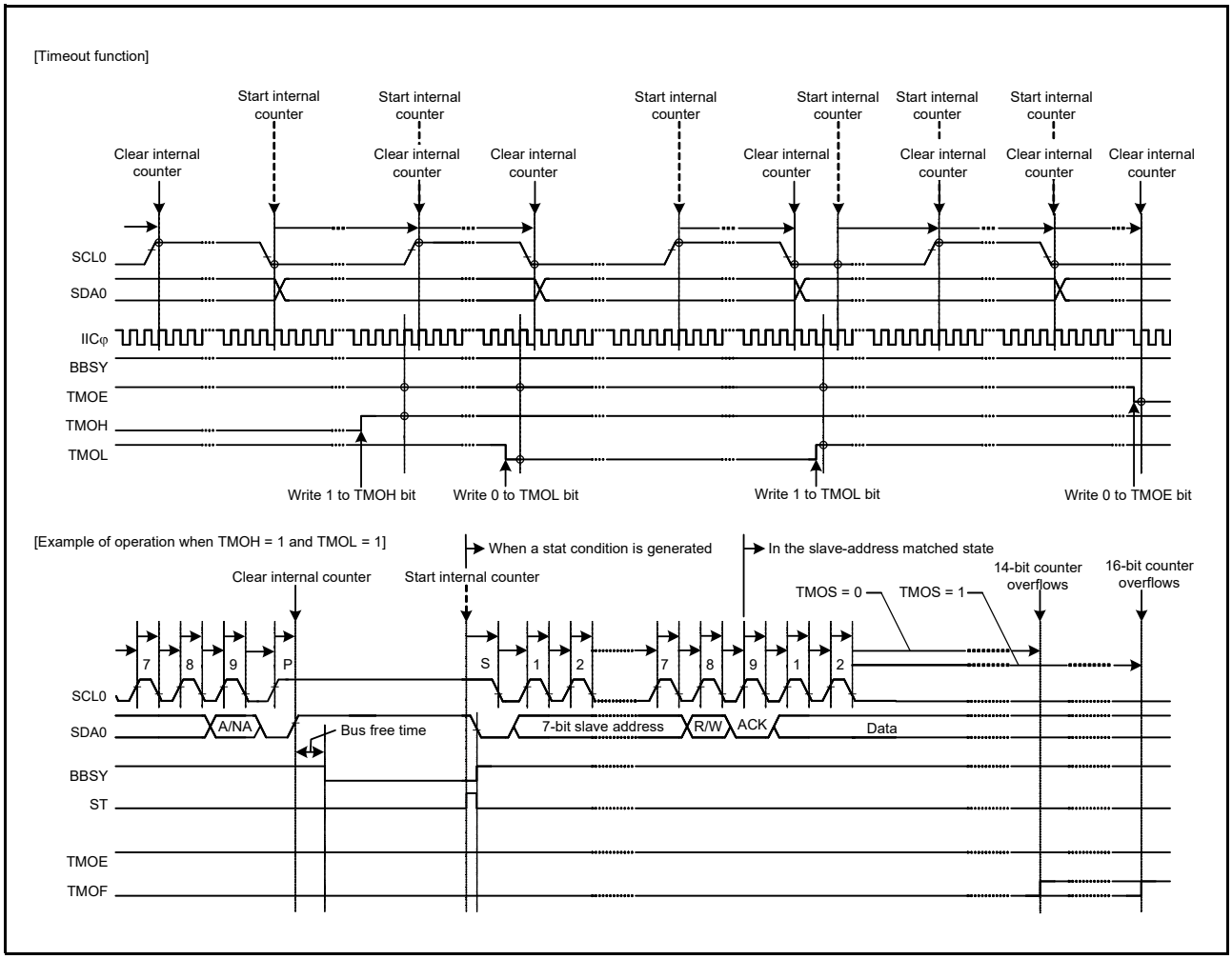

Figure 29.38 Timeout Function

29.11.2 Additional SCL Output Function

In master mode, the RIIC module has a facility for the output of additional SCL to release the SDA0 line from being held low by the slave device due to the master being out of synchronization with the slave device.
This function is mainly used in master mode to release the SDA0 line from the state of being stuck low by including additional SCL output from the RIIC with single cycles of the SCL as the unit if the RIIC cannot generate a stop condition because the slave device is holding the SDA0 line low. Do not use this function in normal situations. Using it when communications are proceeding correctly will lead to malfunctions.
When the ICCR1.CLO bit is set to 1, an additional clock pulse at the frequency set by the ICMR1.CKS[2:0] bits and the ICBRH and ICBRL registers is output from the SCL0 pin. After output of this clock pulse, the CLO bit automatically becomes 0. The SCL0 pin is held low when the ICCR2.BBSY flag is 1 and held high when the BBSY flag is 0.
Consecutive additional clock pulses can be output by writing 1 to the CLO bit after confirming the CLO bit to be 0.
When the RIIC module is in master mode and the slave device is holding the SDA0 line low because synchronization with the slave device has been lost due to the effects of noise, etc., the output of a stop condition is not possible. The additional SCL output function can be used to output additional clock pulses one by one to make the slave device release the SDA0 line from being held low, thus recovering the bus from an unusable state. Release of the SDA0 line by the slave device can be monitored by reading the ICCR1.SDAI bit. After confirming release of the SDA0 line by the slave device, complete communications by regenerating a stop condition.
Use this function with the ICFER.MALE bit set to 0 (master arbitration-lost detection disabled).

Conditions for using the ICCR1.CLO bit

- When the bus is free (ICCR2.BBSY flag is 0) or in master mode (ICCR2.MST bit is 1 and ICCR2.BBSY flag is 1)
- When the communication device does not hold the SCL0 line low

Figure 29.39 shows the operation timing of the additional SCL output function (CLO bit).

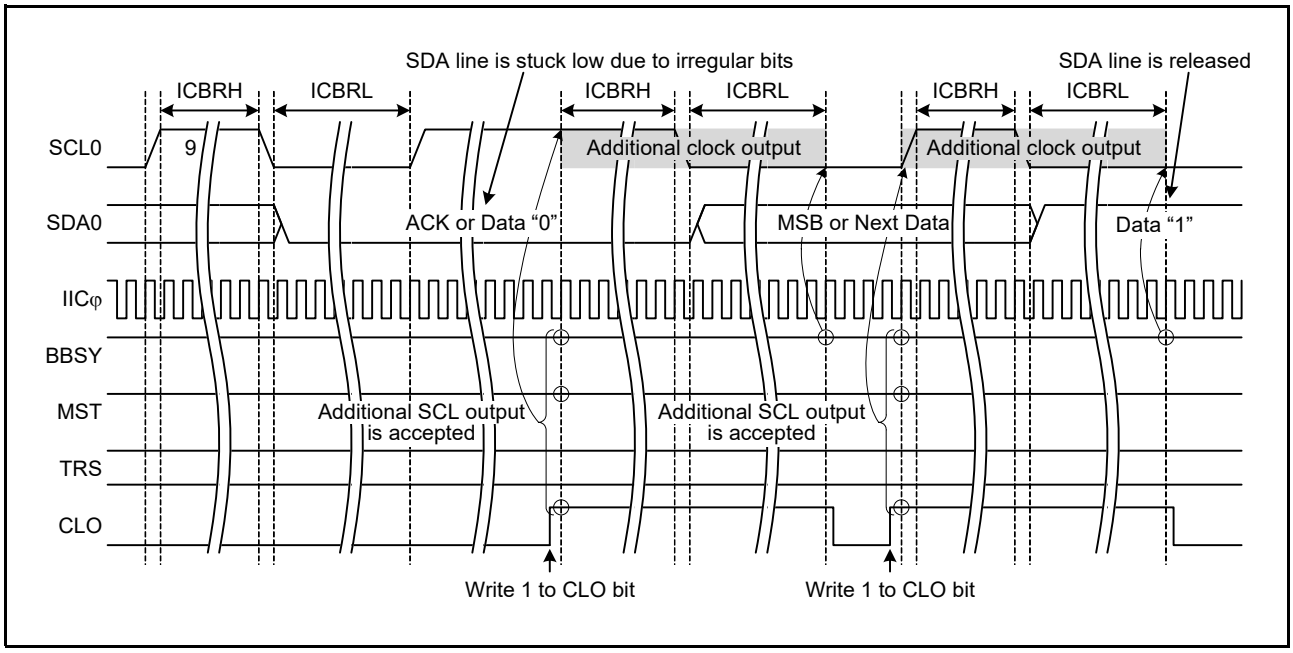

Figure 29.39 Additional SCL Output Function (CLO Bit)

29.11.3 RIIC Reset and Internal Reset

The RIIC module incorporates a function for resetting itself. There are two types of reset. One is referred to as an RIIC reset; this initializes all registers including the ICCR2.BBSY flag. The other is referred to as an internal reset; this releases the RIIC from the slave-address matched state and initializes the internal counter while retaining other settings. After applying a reset, be sure to set the ICCR1.IICRST bit to 0.

Both types of reset are effective for release from bus-hung states because both restore the output state of the SCL0 and SDA0 pins to the high-impedance state.

Applying a reset during slave operation may lead to a loss of synchronization between the master device clock and the slave device clock, so avoided this where possible. Note that monitoring of the bus state, such as for the presence of a start condition, is not possible during an RIIC reset (bits ICE and IICRST in the ICCR1 register are 01b).

For a detailed description of the RIIC and internal resets, refer to section 29.14, Initialization of Registers and Functions When a Reset is Applied or a Condition is Detected.

29.12 SMBus Operation

The RIIC is available for data communication conforming to the SMBus (Version 2.0). To perform SMBus communication, set the ICMR3.SMBS bit to 1. To use the transfer rate within a range of 10 kbps to 100 kbps of the SMBus specification, set the ICMR1.CKS[2:0] bits, the ICBRH register, and the ICBRL register. In addition, determine the values of the ICMR2.DLCS bit and the ICMR2.SDDL[2:0] bits to meet the data hold time (300 ns (min.)). If the RIIC is used only as a slave device, the transfer rate setting is not necessary, whereas the ICBRL register needs to be set to a value longer than the data setup time (250 ns).
For the SMBus device default address (1100 001b), use one of the slave address registers L0 to L2 (registers SARL0, SARL1, and SARL2), and set the corresponding SARUy.FS bit (7-bit/10-bit address format select) (y = 0 to 2) to 0 (7-bit address format).
When transmitting the UDID (Unique Device Identifier), set the ICFER.SALE bit to 1 to enable the slave arbitration-lost detection function.

29.12.1 SMBus Timeout Measurement

(1) Measuring timeout of slave device

The following period (timeout interval: $t_{LOW:SEXT}$) must be measured for slave devices in SMBus communication.

- From start condition to stop condition

To measure timeout for slave devices, measure the period from start condition detection to stop condition detection with the MTU or TMR timer using a start condition detection interrupt (STI) and stop condition detection interrupt (SPI) of the RIIC. The measured timeout period must be within the cumulative clock low extend time (slave device) ($t_{LOW:SEXT}$: 25 ms (max.)) of the SMBus specification.
If the time measured with the MTU or TMR exceeds the detect clock low timeout ($t_{TIMEOUT}$: 25 ms (min.)) of the SMBus specification, the slave device must release the bus by writing 1 to the ICCR1.IICRST bit to apply an internal reset of the RIIC. When an internal reset is applied to the RIIC, it stops driving the SCL0 and SDA0 pins of the bus and makes the SCL0/SDA0 pin outputs high-impedance, thus releasing the bus.

(2) Measuring timeout of master device

The following periods (timeout interval: $t_{LOW:MEXT}$) must be measured for master devices in SMBus communication.

- From start condition to acknowledgment bit
- Between acknowledgment bits
- From acknowledgment bit to stop condition

To measure timeout for master devices, measure these periods with the MTU or TMR timer using a start condition detection interrupt (STI), stop condition detection interrupt (SPI), and transmission end interrupt (TEI) or receive data full interrupt (RXI) of the RIIC. The measured timeout period must be within the cumulative clock low extend time (master device) ($t_{LOW:MEXT}$: 10 ms (max.)) of the SMBus specification, and the total of all $t_{LOW:MEXT}$ from start condition to stop condition must be within $t_{LOW:SEXT}$: 25 ms (max.).
For the ACK receive timing (rising edge of the ninth SCL), monitor the ICSR2.TEND flag in master transmit mode (master transmitter) and the ICSR2.RDRF flag in master receive mode (master receiver). For this reason, perform bytewise transmit operation in master transmit mode, and hold the ICMR3.RDRFS bit 0 until the byte just before reception of the final byte in master receive mode. While the RDRFS bit is 0, the RDRF flag is set to 1 at the rising edge of the ninth SCL.
If the period measured with the MTU or TMR exceeds the cumulative clock low extend time (master device) ($t_{LOW:MEXT}$: 10 ms (max.)) of the SMBus specification or the total of measured periods exceeds the detect clock low timeout ($t_{TIMEOUT}$: 25 ms (min.)) of the SMBus specification, the master device must stop the transaction by generating a stop condition. In master transmit mode, immediately stop the transmit operation (writing data to the ICDRT register).

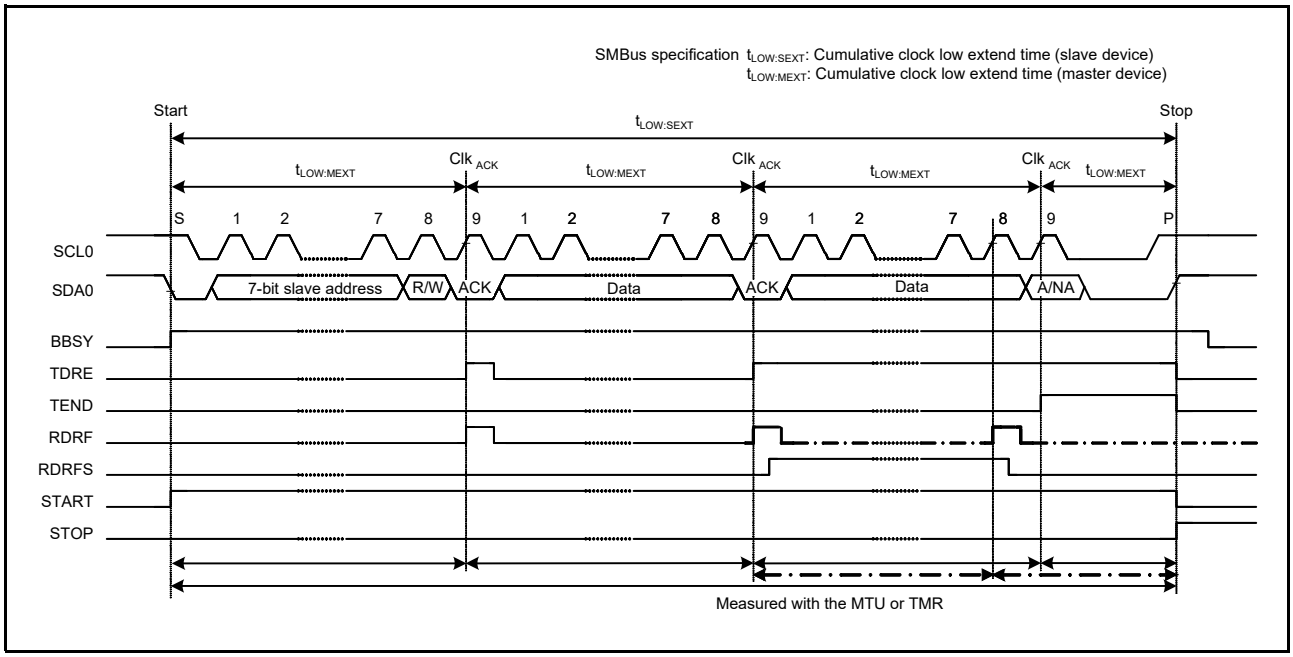

Figure 29.40 SMBus Timeout Measurement

29.12.2 Packet Error Code (PEC)

This MCU incorporates a CRC calculator. The CRC calculator enables transmission of a packet error code (PEC) or checking the received data of the SMBus in data communication of the RIIC. For the CRC generating polynomials of the CRC calculator, refer to section 32, CRC Calculator (CRC).

The PEC data in master transmit mode can be generated by writing all transmit data to the CRC data input register (CRCDIR) in the CRC calculator.

The PEC data in master receive mode can be checked by writing all receive data to CRCDIR in the CRC calculator and comparing the obtained value in the CRC data output register (CRCDOR) with the received PEC data.

To send ACK or NACK according to the match or mismatch result when the final byte is received as a result of the PEC code check, set the ICMR3.RDRFS bit to 1 before the rising edge of the eighth SCL during reception of the final byte, and hold the SCL0 line low at the falling edge of the eighth clock pulse.

29.12.3 SMBus Host Notification Protocol (Notify ARP Master Command)

In communications over an SMBus, a slave device can temporarily act as a master device to notify the SMBus host (or ARP master) of its own slave address or to request its own slave address from the SMBus host.

For a product of this MCU to operate as an SMBus host (or ARP master), the host address (0001 000b) sent from the slave device must be detected as a slave address, so the RIIC has a function for detecting the host address. To detect the host address as a slave address, set the ICMR3.SMBS bit and the ICSER.HOAE bit to 1. Operation after the host address has been detected is the same as normal slave operation.

29.13 Interrupt Sources

The RIIC generates four types of interrupt requests: communication error or communication event (arbitration-lost detection, NACK detection, timeout detection, start condition detection, and stop condition detection), receive data full, transmit data empty, and transmission end.

Table 29.6 lists details of the several interrupt requests. The receive data full and transmit data empty interrupt requests allow the DTC or DMAC to start data transfer.

Table 29.6 Interrupt Sources

Symbol	Interrupt Source	Interrupt Flag	Start DTC/DMA Transfer	Interrupt Generation Condition
EEI	Communication error/ communication event	AL	Not possible	AL = 1 and ALIE = 1
		NACKF		NACKF = 1 and NAKIE = 1
		TMOF		TMOF = 1 and TMOIE = 1
		START		START = 1 and STIE = 1
		STOP		STOP = 1 and SPIE = 1
RXI*2	Receive data full	RDRF	Possible	RDRF = 1 and RIE = 1
TXI*1	Transmit data empty	TDRE	Possible	TDRE = 1 and TIE = 1
TEI*3	Transmission end	TEND	Not possible	TEND = 1 and TEIE = 1

Note: There is a delay time between the execution of a write instruction for a peripheral module by the CPU and actual writing to the module. Thus, when an interrupt flag has been cleared or an interrupt request has been masked, read the relevant flag again to check whether clearing or masking has been completed, and then return from interrupt handling. Returning from interrupt handling without checking that writing to the module has been completed creates a possibility of repeated processing of the same interrupt.

Note 1. Because TXI is an edge-detected interrupted, it does not require clearing. Furthermore, the ICSR2.TDRE flag (a condition for TXI) is automatically set to 0 when data for transmission are written to the ICDRT register or a stop condition is detected (ICSR2.STOP flag is 1).

Note 2. Because RXI is an edge-detected interrupted, it does not require clearing. Furthermore, the ICSR2.RDRF flag (a condition for RXI) is automatically set to 0 when data are read from the ICDRR register.

Note 3. When using the TEI interrupt, clear the ICSR2.TEND flag in the TEI interrupt handling.
Note that the ICSR2.TEND flag is automatically set to 0 when data for transmission are written to the ICDRT register or a stop condition is detected (ICSR2.STOP flag is 1).

Clear the each flag or mask the interrupt request during interrupt handling.

29.13.1 Buffer Operation for TXI and RXI Interrupts

If the conditions for generating a TXI and RXI interrupt are satisfied while the corresponding ICU.IRn.IR flag is 1, the interrupt request is not output for the ICU but retained internally (the capacity for internal retention is one request per source).

An interrupt request that was being retained internally is output to the ICU when the value of the IR flag becomes 0.

Internally retained interrupt requests are automatically cleared under normal conditions of usage.

Internally retained interrupt requests can also be cleared by writing 0 to the corresponding interrupt enable bit in the ICIER register.

29.14 Initialization of Registers and Functions When a Reset is Applied or a Condition is Detected

The RIIC can be reset by MCU reset, RIIC reset, and internal reset functions. Table 29.7 lists the reset states of registers and functions when a reset is applied or a condition is detected.

Table 29.7 Reset States of Registers and Functions When a Reset is Applied or a Condition is Detected

		MCU Reset	RIIC Reset (ICE = 0, IICRST = 1)	Internal Reset (ICE = 1, IICRST = 1)	Start Condition/ Restart Condition Detection	Stop Condition Detection
ICCR1	SDAO, SCLO	To be reset	To be reset	To be reset	Retained	Retained
	IICRST, ICE		Retained	Retained		
	Others		To be reset			
ICCR2	ST, RS	To be reset	To be reset	To be reset	To be reset	Retained
	SP					To be reset
	TRS				See note 1	
	MST				See note 1	
	BBSY			Retained	Becomes 1	
ICMR1	BC[2:0]	To be reset	To be reset	To be reset	To be reset	Retained
	Others			Retained	Retained	
ICMR2		To be reset	To be reset	Retained	Retained	Retained
ICMR3	ACKBT	To be reset	To be reset	Retained	Retained	To be reset
	Others					Retained
ICFER		To be reset	To be reset	Retained	Retained	Retained
ICSER		To be reset	To be reset	Retained	Retained	Retained
ICIER		To be reset	To be reset	Retained	Retained	Retained
ICSR1		To be reset	To be reset	To be reset	Retained	To be reset
ICSR2	START	To be reset	To be reset	To be reset	Becomes 1	To be reset
	STOP				Retained	Becomes 1
	TEND					To be reset
	TDRE				See note 1	
	Others				Retained	Retained
SARL0, SARL1, SARL2, SARU0, SARU1, SARU2		To be reset	To be reset	Retained	Retained	Retained
ICBRH, ICBRL		To be reset	To be reset	Retained	Retained	Retained
ICDRT		To be reset	To be reset	Retained	Retained	Retained
ICDRR		To be reset	To be reset	Retained	Retained	Retained
ICDRS		To be reset	To be reset	To be reset	Retained	Retained
Timeout function		To be reset	To be reset	To be reset	Operation	Operation
Bus free time measurement		To be reset	To be reset	Operation	Operation	Operation

Note 1. This bit is not reset. This bit becomes 0 or 1 in accordance with the conditions.

29.15 Event Link Function (Output)

The RIIC0 handles event output for the event link controller (ELC) corresponding to the following sources.

- Communication error/communication event
- Receive data full
- Transmit data empty
- Transmission end

29.15.1 Interrupt Handling and Event Linking

The RIIC has four types of interrupts: communication error or communication event (arbitration-lost detection, NACK detection, timeout detection, start condition detection, or stop condition detection), receive data full, transmit data empty, and transmission end. Each of these has an enable bit to control enabling and disabling of the interrupt signal. An interrupt request signal is output for the ICU when an interrupt source condition is satisfied while the setting of the corresponding enable bit is enabled.
The corresponding event signals are sent to other modules via the ELC when the interrupt source conditions are satisfied, regardless of the settings of the interrupt enable bits.
For details on interrupt sources, see Table 29.6.

29.16 Usage Notes

29.16.1 Setting Module Stop Function

Module stop state can be entered or released using module stop control register B (MSTPCRB). The initial setting is for operation of the RIIC to be stopped. RIIC register access is enabled by releasing the module stop state.
For details on module stop control register B, refer to section 11, Low Power Consumption.

29.16.2 Notes on Starting Transfer

If the IR flag corresponding to the RIIC interrupt is 1 when transfer is started (ICCR1.ICE bit is 1), follow the procedure below to clear interrupts before enabling operations. Starting transfer with the IR flag set to 1 while the ICCR1.ICE bit is 1 leads to an interrupt request being internally retained after transfer starts, and this can lead to unanticipated behavior of the IR flag.

1. Confirm that the ICCR1.ICE bit is 0.
2. Set the relevant interrupt enable bits (ICIER.TIE, etc.) on the peripheral function side to 0.
3. Read the relevant interrupt enable bits (ICIER.TIE, etc.) on the peripheral function side and confirm that its value is 0.
4. Set the IR flag to 0.

30. CAN Module (RSCAN)

30.1 Overview

This MCU incorporates the Controller Area Network (CAN) module with one channel of CAN protocol controller conforming to the ISO 11898-1 standard. Table 30.1 shows the CAN module specifications. Figure 30.1 shows the CAN module block diagram. Table 30.2 lists the I/O pins of the CAN module.
In this section, the following variables indicate the number of registers.

- j (j = 0 to 15): Receive rule entry register number
  (GAFLIDLj, GAFLIDHj, GAFLMLj, GAFLMHj, GAFLPLj, GAFLPHj)
- m (m = 0, 1): Receive FIFO buffer number
- n (n = 0 to 15): Receive buffer number
- p (p = 0 to 3): Transmit buffer number
- r (r = 0 to 127): RAM test register (RPGACCr) number

Table 30.1 CAN Module Specifications (1/2)

Item	Specification
Number of channels	1
Protocol	ISO 11898-1 compliant
Communication speed	• Maximum 1 Mbps $\text{Communication speed (CAN bit time clock)} = \frac{1}{\text{CAN bit time}}$ CAN bit time = CANTq × Tq count per bit $\text{CANTq} = \frac{\text{CFGL.BRP[9:0] bits} + 1}{\text{fCAN}}$ Tq: Time quantum fCAN: Frequency of CAN clock source (selected by the GCFGL.DCS bit)
Buffer	20 buffers in total • Individual buffers: 4 buffers (4 buffers for one channel) Transmit buffer: 4 buffers per a channel • Shared buffers: 16 buffers Receive buffer: 0 to 16 buffers Receive FIFO buffer: 2 FIFO buffers (up to 16 buffers allocatable to each) Transmit/receive FIFO buffer: A FIFO buffer per a channel (up to 16 buffers allocatable to each)
Reception function	• Receives data frames and remote frames. • Selects ID format (standard ID, extended ID, or both IDs) to be received. • Sets interrupt enable/disable for each FIFO. • Mirror function (to receive messages transmitted from the own CAN node) • Timestamp function (to record message reception time as a 16-bit timer value)
Reception filter function	• Selects receive messages according to 16 receive rules. • Sets the number of receive rules (0 to 16) for each channel. • Acceptance filter processing: Sets ID and mask for each receive rule. • DLC filter processing: Sets DLC check value for each receive rule.
Receive message transfer function	• Routing function to transfer receive messages to arbitrary destinations (can be transferred to up to 2 buffers). Transfer destination: Receive buffer, receive FIFO buffer, and transmit/receive FIFO buffer • Label addition function Stores label information together when storing a message in a receive buffer and FIFO buffer.
Transmission function	• Transmits data frames and remote frames. • Selects ID format (standard ID, extended ID, or both IDs) to be transmitted. • Sets interrupt enable/disable for each transmit buffer and transmit/receive FIFO buffer. • Selects ID priority transmission or transmit buffer number priority transmission. • Transmit abort function (completion of the abort can be confirmed with the flag) • One-shot transmission function
Interval transmission function	Sets message transmission interval time (transmit mode of transmit/receive FIFO buffers)

Table 30.1 CAN Module Specifications (2/2)

Item	Specification
Transmit history function	Stores the history information of transmitted messages.
Bus off recovery mode selection	Selects a method of returning from bus off state. • ISO 11898-1 compliant • Automatic transition to channel halt mode at bus-off entry • Automatic transition to channel halt mode at bus-off end • Transition to channel halt mode by a program • Transition to the error-active state by a program (forcible return from the bus off state)
Error status monitoring	• Monitors CAN protocol errors (stuff error, form error, ACK error, CRC error, bit error, ACK delimiter error, and bus dominant lock). • Detects error status transitions (error warning, error passive, bus off entry, and bus off recovery) • Reads the error counter. • Monitors DLC errors.
Interrupt source	5 sources • Global (2 sources) Global receive FIFO interrupt Global error interrupt • Channel (3 sources/channel) Channel transmit interrupt – Transmit complete interrupt – Transmit abort interrupt – Transmit/receive FIFO transmit complete interrupt – Transmit history interrupt Transmit/receive FIFO receive interrupt Channel error interrupt
CAN clock source	Peripheral module clock (PCLK), CANMCLK
Test function	Test function for user evaluation • Listen-only mode • Self-test mode 0 (external loopback) • Self-test mode 1 (internal loopback) • RAM test (read/write test)
Low power consumption	Module stop state can be set.

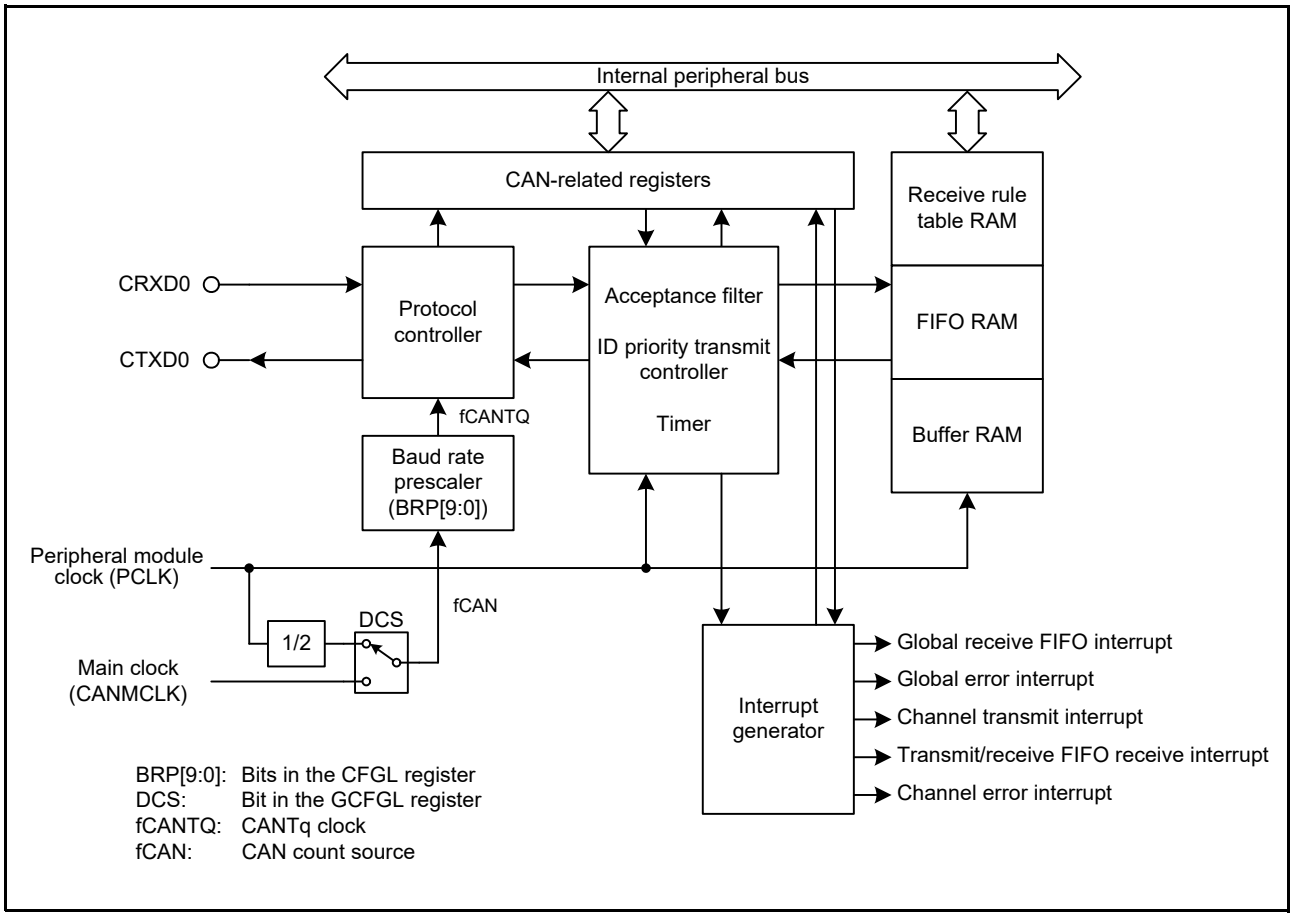

Figure 30.1 CAN Module Block Diagram

- CRXD0/CTXD0: CAN input/output pins
- Protocol controller: Handles CAN protocol processing such as bus arbitration, bit timing at transmission and reception, stuffing, and error handling, etc.
- Receive rule table RAM: Stores the rules for filtering received messages. Each receive rule specifies an ID/frame format/data length code of the message to be received, a label to be attached to the message that has passed through the filter, and the location of such message to be stored.
- FIFO RAM: Includes three 16-stage FIFO buffers. There are two FIFOs for reception only and one FIFO for transmission or reception.
- Buffer RAM: Used as a transmit and receive buffer. There are 4 buffers for transmission and 16 buffers for reception.
- Acceptance filter: Performs filtering of received messages.
- Timer: There are a timer for timestamp function during reception and a timer which determines the message transmission intervals while using the transmit FIFO buffer.

Table 30.2 I/O Pins of the CAN Module

Pin Name	I/O	Description
CRXD0	Input	Receive data input pins of the RSCAN0
CTXD0	Output	Transmit data output pins of the RSCAN0

30.2 Register Descriptions

30.2.1 Bit Configuration Register L (CFGL)

Address(es): RSCAN0.CFGL 000A 8300h

	b15	b14	b13	b12	b11	b10	b9	b8	b7	b6	b5	b4	b3	b2	b1	b0
	—	—	—	—	—	—	BRP[9:0]									
Value after reset:	0	0	0	0	0	0	0	0	0	0	0	0	0	0	0	0

Bit	Symbol	Bit Name	Description	R/W
b9 to b0	BRP[9:0]	Prescaler Division Ratio Set	When these bits are set to P (0 to 1023), the baud rate prescaler divides fCAN by P + 1.	R/W
b15 to b10	—	Reserved	These bits are read as 0. The write value should be 0.	R/W

Modify the CFGL register only in channel reset mode or channel halt mode. Set this register in channel reset mode before making a transition to channel communication mode or channel halt mode. For setting bit timing, see section 30.9, Initial Settings.

BRP[9:0] Bits (Prescaler Division Ratio Set)

The CAN Tq clock (fCANTQ) is obtained by the CAN clock source (fCAN) and setting the clock division ratio with the BRP[9:0] bits and one clock cycle of the CAN Tq clock is 1 Time Quantum (Tq).

30.2.2 Bit Configuration Register H (CFGH)

Address(es): RSCAN0.CFGH 000A 8302h

	b15	b14	b13	b12	b11	b10	b9	b8	b7	b6	b5	b4	b3	b2	b1	b0
	—	—	—	—	—	—	SJW[1:0]		—	TSEG2[2:0]			TSEG1[3:0]			
Value after reset:	0	0	0	0	0	0	0	0	0	0	0	0	0	0	0	0

Bit	Symbol	Bit Name	Description	R/W
b3 to b0	TSEG1[3:0]	Time Segment 1 Control	b3 b0 0 0 0 0: Setting prohibited 0 0 0 1: Setting prohibited 0 0 1 0: Setting prohibited 0 0 1 1: 4 Tq 0 1 0 0: 5 Tq 0 1 0 1: 6 Tq 0 1 1 0: 7 Tq 0 1 1 1: 8 Tq 1 0 0 0: 9 Tq 1 0 0 1: 10 Tq 1 0 1 0: 11 Tq 1 0 1 1: 12 Tq 1 1 0 0: 13 Tq 1 1 0 1: 14 Tq 1 1 1 0: 15 Tq 1 1 1 1: 16 Tq	R/W
b6 to b4	TSEG2[2:0]	Time Segment 2 Control	b6 b4 0 0 0: Setting prohibited 0 0 1: 2 Tq 0 1 0: 3 Tq 0 1 1: 4 Tq 1 0 0: 5 Tq 1 0 1: 6 Tq 1 1 0: 7 Tq 1 1 1: 8 Tq	R/W
b7	—	Reserved	This bit is read as 0. The write value should be 0.	R/W
b9, b8	SJW[1:0]	Resynchronization Jump Width Control	b9 b8 0 0: 1 Tq 0 1: 2 Tq 1 0: 3 Tq 1 1: 4 Tq	R/W
b15 to b10	—	Reserved	These bits are read as 0. The write value should be 0.	R/W

Modify the CFGH register only in channel reset mode or channel halt mode. Set this register in channel reset mode before making a transition to channel communication mode or channel halt mode. For setting bit timing, see section 30.9, Initial Settings.

TSEG1[3:0] Bits (Time Segment 1 Control)

These bits are used to specify a Tq value for the total length of the propagation time segment (PROP_SEG) and phase buffer segment 1 (PHASE_SEG1). A value of 4 Tq to 16 Tq can be set.

TSEG2[2:0] Bits (Time Segment 2 Control)

These bits are used to specify a Tq value for the length of phase buffer segment 2 (PHASE_SEG2).
A value of 2 Tq to 8 Tq can be set. Set a value smaller than the value of the TSEG1[3:0] bits.

SJW[1:0] Bits (Resynchronization Jump Width Control)

These bits are used to specify a Tq value for the resynchronization jump width. A value of 1 Tq to 4 Tq can be set. Set a value equal to or smaller than the value of the TSEG2[3:0] bits.

30.2.3 Control Register L (CTRL)

Address(es): RSCAN0.CTRL 000A 8304h

	b15	b14	b13	b12	b11	b10	b9	b8	b7	b6	b5	b4	b3	b2	b1	b0
	ALIE	BLIE	OLIE	BORIE	BOEIE	EPIE	EWIE	BEIE	—	—	—	—	RTBO	CSLPR	CHMDC[1:0]	
Value after reset:	0	0	0	0	0	0	0	0	0	0	0	0	0	1	0	1

Bit	Symbol	Bit Name	Description	R/W
b1, b0	CHMDC[1:0]	Mode Select	b1 b0 0 0: Channel communication mode. 0 1: Channel reset mode. 1 0: Channel halt mode. 1 1: Setting prohibited.	R/W
b2	CSLPR	Channel Stop Mode	0: Other than channel stop mode. 1: Channel stop mode.	R/W
b3	RTBO	Forcible Return from Bus-off	When this bit is set to 1, forcible return from the bus off state is made. This bit is read as 0.	R/W
b7 to b4	—	Reserved	These bits are read as 0. The write value should be 0.	R/W
b8	BEIE	Protocol Error Interrupt Enable	0: Protocol error interrupt is disabled. 1: Protocol error interrupt is enabled.	R/W
b9	EWIE	Error Warning Interrupt Enable	0: Error warning interrupt is disabled. 1: Error warning interrupt is enabled.	R/W
b10	EPIE	Error Passive Interrupt Enable	0: Error passive interrupt is disabled. 1: Error passive interrupt is enabled.	R/W
b11	BOEIE	Bus Off Entry Interrupt Enable	0: Bus off entry interrupt is disabled. 1: Bus off entry interrupt is enabled.	R/W
b12	BORIE	Bus Off Recovery Interrupt Enable	0: Bus off recovery interrupt is disabled. 1: Bus off recovery interrupt is enabled.	R/W
b13	OLIE	Overload Frame Transmit Interrupt Enable	0: Overload frame transmit interrupt is disabled. 1: Overload frame transmit interrupt is enabled.	R/W
b14	BLIE	Bus Lock Interrupt Enable	0: Bus lock interrupt is disabled. 1: Bus lock interrupt is enabled.	R/W
b15	ALIE	Arbitration Lost Interrupt Enable	0: Arbitration lost interrupt is disabled. 1: Arbitration lost interrupt is enabled.	R/W

CHMDC[1:0] Bits (Mode Select)

These bits are used to select a channel mode (channel communication mode, channel reset mode, or channel halt mode). For details, see section 30.3.2, Channel Modes. Setting the CSLPR bit to 1 in channel reset mode allows transition to channel stop mode. Do not set the CHMDC[1:0] bits to 11b. When the CAN module has transitioned to channel halt mode depending on the setting of the CTRH.BOM[1:0] bits, the CHMDC[1:0] bits automatically become 10b.

CSLPR Bit (Channel Stop Mode)

Setting this bit to 1 places the channel in channel stop mode.
Setting this bit to 0 makes the channel leave from channel stop mode.
Do not modify this bit in channel communication mode or channel halt mode.

RTBO Bit (Forcible Return from Bus-off)

Setting this bit to 1 (forcible return from the bus off state) in the bus off state forcibly returns the state from the bus off state to the error active state. This bit is automatically set to 0. Setting this bit to 1 sets the STSH.TEC[7:0] and STSH.REC[7:0] flags to 00h and also sets the STSL.BOSTS flag to 0 (not in bus off state).The other registers remain unchanged. No bus off recovery interrupt request due to return from the bus off state is generated. Use this bit only when the CTRH.BOM[1:0] bits are 00b (ISO 11898-1 compliant).
A delay of up to 1 CAN bit time occurs after the RTBO bit is set to 1 until the CAN module transitions to the error active state. Set this bit to 1 in channel communication mode.

BEIE Bit (Protocol Error Interrupt Enable)

When the ERFLL.BEF flag becomes 1 while the BEIE bit is 1, an error interrupt request is generated. Modify this bit only in channel reset mode.

EWIE Bit (Error Warning Interrupt Enable)

When the ERFLL.EWF flag becomes 1 while the EWIE bit is 1, an error interrupt request is generated. Modify this bit only in channel reset mode.

EPIE Bit (Error Passive Interrupt Enable)

When the ERFLL.EPF flag becomes 1 while the EPIE bit is 1, an error interrupt request is generated. Modify this bit only in channel reset mode.

BOEIE Bit (Bus Off Entry Interrupt Enable)

When the ERFLL.BOEF flag becomes 1 while the BOEIE bit is 1, an error interrupt request is generated. Modify this bit only in channel reset mode.

BORIE Bit (Bus Off Recovery Interrupt Enable)

When the ERFLL.BORF flag becomes 1 while the BORIE bit is 1, an error interrupt request is generated. Modify this bit only in channel reset mode.

OLIE Bit (Overload Frame Transmit Interrupt Enable)

When the ERFLL.OVLF flag becomes 1 while the OLIE bit is 1, an error interrupt request is generated. Modify this bit only in channel reset mode.

BLIE Bit (Bus Lock Interrupt Enable)

When the ERFLL.BLF flag becomes 1 while the BLIE bit is 1, an error interrupt request is generated. Modify this bit only in channel reset mode.

ALIE Bit (Arbitration Lost Interrupt Enable)

When the ERFLL.ALF flag becomes 1 while the ALIE bit is 1, an error interrupt request is generated. Modify this bit only in channel reset mode.

30.2.4 Control Register H (CTRH)

Address(es): RSCAN0.CTRH 000A 8306h

	b15	b14	b13	b12	b11	b10	b9	b8	b7	b6	b5	b4	b3	b2	b1	b0
	—	—	—	—	—	CTMS[1:0]		CTME	ERRD	BOM[1:0]		—	—	—	—	TAIE
Value after reset:	0	0	0	0	0	0	0	0	0	0	0	0	0	0	0	0

Bit	Symbol	Bit Name	Description	R/W
b0	TAIE	Transmit Abort Interrupt Enable	0: Transmit abort interrupt is disabled. 1: Transmit abort interrupt is enabled.	R/W
b4 to b1	—	Reserved	These bits are read as 0. The write value should be 0.	R/W
b6, b5	BOM[1:0]	Bus Off Recovery Mode Select	b6 b5 0 0: ISO 11898-1 compliant 0 1: Transition to channel halt mode at bus-off entry 1 0: Transition to channel halt mode at bus-off end 1 1: Transition to channel halt mode in the bus off state by a program request	R/W
b7	ERRD	Error Display Mode Select	0: Only the first error is indicated after b14 to b8 in the ERFLL register have all been cleared. 1: The error flags of all errors are indicated.	R/W
b8	CTME	Communication Test Mode Enable	0: Communication test mode is disabled. 1: Communication test mode is enabled.	R/W
b10, b9	CTMS[1:0]	Communication Test Mode Select	b10 b9 0 0: Standard test mode 0 1: Listen-only mode 1 0: Self-test mode 0 (external loopback mode) 1 1: Self-test mode 1 (internal loopback mode)	R/W
b15 to b11	—	Reserved	These bits are read as 0. The write value should be 0.	R/W

TAIE Bit (Transmit Abort Interrupt Enable)

When transmit abort of the transmit buffer is completed with the TAIE bit set to 1, an interrupt request is generated. Modify this bit only in channel reset mode.

BOM[1:0] Bits (Bus Off Recovery Mode Select)

These bits are used to select a bus off recovery mode of the CAN module.

When the BOM[1:0] bits are set to 00b, return to the error active state from the bus off state is compliant with the ISO 11898-1 standard. That is, the CAN module reenters the CAN communication (error active state) after 11 consecutive recessive bits are detected 128 times. A bus off recovery interrupt request is generated at the time of return from the bus off state. Even if the CTRL.CHMDC[1:0] bits are set to 10b (channel halt mode) before recessive bits are detected 128 times, the CAN module does not transition to channel halt mode until recessive bits are detected 128 times.

When the CAN module reaches the bus off state while the BOM[1:0] bits are set to 01b, the CTRL.CHMDC[1:0] bits are set to 10b and the CAN module transitions to channel halt mode. No bus off recovery interrupt request is generated at the time of return from the bus off state and the STSH.TEC[7:0] and STSH.REC[7:0] flags are set to 00h.

When the CAN module reaches the bus off state when the BOM[1:0] bits are set to 10b, the CTRL.CHMDC[1:0] bits are set to 10b and the CAN module transitions to channel halt mode after return from the bus off state (11 consecutive recessive bits are detected 128 times). A bus off recovery interrupt request is generated at the time of return from the bus off state and the STSH.TEC[7:0] and STSH.REC[7:0] flags are set to 00h.

When the BOM[1:0] bits are set to 11b and the CTRL.CHMDC[1:0] bits are set to 10b while the CAN module is in the bus off state, the CAN module transitions to channel halt mode. No bus off recovery interrupt request is generated at the time of return from the bus off state and the STSH.TEC[7:0] and STSH.REC[7:0] flags are set to 00h. However, if 11 consecutive recessive bits are detected 128 times and the CAN module has recovered to the error active state from the

bus off state before the CTRL.CHMDC[1:0] bits are set to 10b, a bus off recovery interrupt request is generated.
If the CPU requests transition to channel reset mode at the same time when the CAN module transitions to channel halt mode (at bus off entry when the BOM[1:0] bits are 01b or at bus off end when the BOM[1:0] bits are 10b), the CPU's request takes precedence. Modify these bits only in channel reset mode.

ERRD Bit (Error Display Mode Select)

This bit is used to control display mode of b14 to b8 in the ERFLL register.
When this bit is 0, only the flags of the first error become 1. If two or more errors occur first, all the flags of detected errors become 1.
When this bit is 1, all the flags of errors that have occurred become 1 regardless of the error occurrence order. Modify this bit only in channel reset mode or channel halt mode.

CTME Bit (Communication Test Mode Enable)

Setting this bit to 1 enables communication test mode. Modify this bit only in channel halt mode. This bit becomes 0 in channel reset mode.

CTMS[1:0] Bits (Communication Test Mode Select)

These bits are used to select a communication test mode. Modify these bits only in channel halt mode. These bits become 0 in channel reset mode.

30.2.5 Status Register L (STSL)

Address(es): RSCAN0.STSL 000A 8308h

	b15	b14	b13	b12	b11	b10	b9	b8	b7	b6	b5	b4	b3	b2	b1	b0
	—	—	—	—	—	—	—	—	COMSTS	RECSTS	TRMSTS	BOSTS	EPSTS	CSLPSTS	CHLTSTS	CRSTSTS
Value after reset:	0	0	0	0	0	0	0	0	0	0	0	0	0	1	0	1

Bit	Symbol	Bit Name	Description	R/W
b0	CRSTSTS	Channel Reset Status Flag	0: Not in channel reset mode 1: In channel reset mode	R
b1	CHLTSTS	Channel Halt Status Flag	0: Not in channel halt mode 1: In channel halt mode	R
b2	CSLPSTS	Channel Stop Status Flag	0: Not in channel stop mode 1: In channel stop mode	R
b3	EPSTS	Error Passive Status Flag	0: Not in error passive state 1: In error passive state	R
b4	BOSTS	Bus Off Status Flag	0: Not in bus off state 1: In bus off state	R
b5	TRMSTS	Transmit Status Flag	0: Bus idle or in reception 1: In transmission or bus off state	R
b6	RECSTS	Receive Status Flag	0: Bus idle, in transmission or bus off state 1: In reception	R
b7	COMSTS	Communication Status Flag	0: Communication is not ready. 1: Communication is ready.	R
b15 to b8	—	Reserved	These bits are read as 0.	R

CRSTSTS Flag (Channel Reset Status Flag)

This flag becomes 1 when the CAN module has transitioned to channel reset mode, and becomes 0 when the CAN module has transitioned to channel communication mode or channel halt mode. This flag remains 1 even if the CAN module transitions from channel reset mode to channel stop mode.

CHLTSTS Flag (Channel Halt Status Flag)

This flag becomes 1 when the CAN module has transitioned to channel halt mode, and becomes 0 when the CAN module has exited channel halt mode.

CSLPSTS Flag (Channel Stop Status Flag)

This flag becomes 1 when the CAN module has transitioned to channel stop mode, and becomes 0 when the CAN module has returned from channel stop mode.

EPSTS Flag (Error Passive Status Flag)

This flag becomes 1 when the CAN module has entered the error passive state (128 ≤ STSH.TEC[7:0] value ≤ 255 or 128 ≤ STSH.REC[7:0] value), and becomes 0 when the CAN module has exited the error passive state or has entered channel reset mode.

BOSTS Flag (Bus Off Status Flag)

This flag becomes 1 when the CAN module has entered the bus off state (STSH.TEC[7:0] value > 255), and becomes 0 when the CAN module has exited the bus off state.

TRMSTS Flag (Transmit Status Flag)

This flag becomes 1 when transmission has started, and becomes 0 when the bus has become idle or reception has started. This flag remains 1 in the bus off state.

RECSTS Flag (Receive Status Flag)

This flag becomes 1 when reception has started, and becomes 0 when the bus has become idle or transmission has started.

COMSTS Flag (Communication Status Flag)

This flag indicates that communication is ready.
This flag becomes 1 when the CAN module has detected 11 consecutive recessive bits after it has transitioned from channel reset mode or channel halt mode to channel communication mode. This flag becomes 0 in channel reset mode or channel halt mode.

30.2.6 Status Register H (STSH)

Address(es): RSCAN0.STSH 000A 830Ah

	b15	b14	b13	b12	b11	b10	b9	b8	b7	b6	b5	b4	b3	b2	b1	b0
	TEC[7:0]								REC[7:0]							
Value after reset:	0	0	0	0	0	0	0	0	0	0	0	0	0	0	0	0

Bit	Symbol	Description	R/W
b7 to b0	REC[7:0]	The receive error counter (REC) can be read.	R
b15 to b8	TEC[7:0]	The transmit error counter (TEC) can be read.	R

REC[7:0] Flags

These flags indicate the receive error counter value. For receive error counter increment/decrement conditions, see the CAN standard (ISO 11898-1).
These flags become 00h in channel reset mode.

TEC[7:0] Flags

These flags indicate the transmit error counter value. For transmit error counter increment/decrement conditions, see the CAN standard (ISO 11898-1).
These flags become 00h in channel reset mode.

30.2.7 Error Flag Register L (ERFLL)

Address(es): RSCAN0.ERFLL 000A 830Ch

	b15	b14	b13	b12	b11	b10	b9	b8	b7	b6	b5	b4	b3	b2	b1	b0
	—	ADERR	B0ERR	B1ERR	CERR	AERR	FERR	SERR	ALF	BLF	OVLF	BORF	BOEF	EPF	EWF	BEF
Value after reset:	0	0	0	0	0	0	0	0	0	0	0	0	0	0	0	0

Bit	Symbol	Bit Name	Description	R/W
b0	BEF	Bus Error Flag	0: No channel bus error is detected. 1: Channel bus error is detected.	R/(W) *1
b1	EWF	Error Warning Flag	0: No error warning is detected. 1: Error warning is detected.	R/(W) *1
b2	EPF	Error Passive Flag	0: No error passive is detected. 1: Error passive is detected.	R/(W) *1
b3	BOEF	Bus Off Entry Flag	0: No bus off entry is detected. 1: Bus off entry is detected.	R/(W) *1
b4	BORF	Bus Off Recovery Flag	0: No bus off recovery is detected. 1: Bus off recovery is detected.	R/(W) *1
b5	OVLF	Overload Flag	0: No overload is detected. 1: Overload is detected.	R/(W) *1
b6	BLF	Bus Lock Flag	0: No channel bus lock is detected. 1: Channel bus lock is detected.	R/(W) *1
b7	ALF	Arbitration Lost Flag	0: No arbitration lost is detected. 1: Arbitration lost is detected.	R/(W) *1
b8	SERR	Stuff Error Flag	0: No stuff error is detected. 1: Stuff error is detected.	R/(W) *1
b9	FERR	Form Error Flag	0: No form error is detected. 1: Form error is detected.	R/(W) *1
b10	AERR	ACK Error Flag	0: No ACK error is detected. 1: ACK error is detected.	R/(W) *1
b11	CERR	CRC Error Flag	0: No CRC error is detected. 1: CRC error is detected.	R/(W) *1
b12	B1ERR	Recessive Bit Error Flag	0: No recessive bit error is detected. 1: Recessive bit error is detected.	R/(W) *1
b13	B0ERR	Dominant Bit Error Flag	0: No dominant bit error is detected. 1: Dominant bit error is detected.	R/(W) *1
b14	ADERR	ACK Delimiter Error Flag	0: No ACK delimiter error is detected. 1: ACK delimiter error is detected.	R/(W) *1
b15	—	Reserved	This bit is read as 0. The write value should be 0.	R/W

Note 1. Only 0 can be written to this bit, to clear the flag. Writing 1 does not affect the flag value.

See the CAN standard (ISO 11898-1) if you want to check error occurrence conditions. To clear each flag of this register, write 0 by the program. These flags cannot be set to 1 by the program. If any of these flags becomes 1 at the timing when the program writes 0 to the flag, the flag becomes 1. Each flag becomes 0 in channel reset mode.
With respect to b14 to b8 in the ERFLL register, if an error is detected with all flags of b14 to b8 set to 0 when the CTRH.ERRD bit is set to 0 (only the first error information is displayed), the corresponding flag becomes 1.

BEF Flag (Bus Error Flag)

This flag becomes 1 when any one of the ADERR, B0ERR, B1ERR, CERR, AERR, FERR, and SERR flags becomes 1.

EWF Flag (Error Warning Flag)

This flag becomes 1 only when the STSH.REC[7:0] or STSH.TEC[7:0] value exceeds 95 for the first time. Therefore, if the program writes 0 to this flag with the STSH.REC[7:0] or STSH.TEC [7:0] value remaining over 95, this bit is not set to 1 until both STSH.REC[7:0] and STSH.TEC[7:0] values become 95 or less and then the STSH.REC[7:0] or STSH.TEC[7:0] value exceeds 95 again.

EPF Flag (Error Passive Flag)

This flag becomes 1 when the CAN module becomes error passive state (STSH.REC[7:0] or STSH.TEC[7:0] value > 127). This flag becomes 1 only when the STSH.REC[7:0] or STSH.TEC[7:0] value exceeds 127 for the first time. Therefore, if the program writes 0 to this flag with the STSH.REC[7:0] or STSH.TEC[7:0] value remaining over 127, this bit is not set to 1 until both STSH.REC[7:0] and STSH.TEC[7:0] values become 127 or less and then the STSH.REC[7:0] or STSH.TEC[7:0] value exceeds 127 again.

BOEF Flag (Bus Off Entry Flag)

This flag becomes 1 when the state becomes bus off state (STSH.TEC[7:0] value > 255). This flag also becomes 1 when the state becomes bus off state with the CTRH.BOM[1:0] bits set to 01b (transition to channel halt mode at bus off entry).

BORF Flag (Bus Off Recovery Flag)

This flag becomes 1 when 11 consecutive recessive bits have been detected 128 times and the CAN module returns from the bus off state. However, this flag is not set to 1 if the CAN module returns from the bus off state in any of the following ways before 11 consecutive recessive bits are detected 128 times.

- The CTRL.CHMDC[1:0] bits are set to 01b (channel reset mode).
- The CTRL.RTBO bit is set to 1 (forcible return from the bus off state is made).
- The CTRH.BOM[1:0] bits are set to 01b (transition to channel halt mode at bus off entry).
- The CTRL.CHMDC[1:0] bits are set to 10b (channel halt mode) before 11 consecutive recessive bits are detected 128 times with the CTRH.BOM[1:0] bits set to 11b (transition to channel halt mode upon a request from the program during bus off).

OVLF Flag (Overload Flag)

This flag becomes 1 when the overload frame transmit condition has been detected when performing reception or transmission.

BLF Flag (Bus Lock Flag)

This flag becomes 1 when 32 consecutive dominant bits have been detected on the CAN bus in channel communication mode. After that, detection of the bus lock becomes possible again if either of the following conditions is met.

- A recessive bit is detected after the BLF flag has been modified from 1 to 0.
- The CAN module transitions to channel reset mode and returns to channel communication mode after the BLF flag has been modified from 1 to 0.

ALF Flag (Arbitration Lost Flag)

This flag becomes 1 when an arbitration lost has been detected.

SERR Flag (Stuff Error Flag)

This flag becomes 1 when a stuff error has been detected.

FERR Flag (Form Error Flag)

This flag becomes 1 when a form error has been detected.

AERR Flag (ACK Error Flag)

This flag becomes 1 when an ACK error has been detected.

CERR Flag (CRC Error Flag)

This flag becomes 1 when a CRC error has been detected.

B1ERR Flag (Recessive Bit Error Flag)

This flag becomes 1 when a dominant bit has been detected though a recessive bit was transmitted.

B0ERR Flag (Dominant Bit Error Flag)

This flag becomes 1 when a recessive bit has been detected though a dominant bit was transmitted.

ADERR Flag (ACK Delimiter Error Flag)

This flag becomes 1 when a form error has been detected in the ACK delimiter during transmission.

30.2.8 Error Flag Register H (ERFLH)

Address(es): RSCAN0.ERFLH 000A 830Eh

	b15	b14	b13	b12	b11	b10	b9	b8	b7	b6	b5	b4	b3	b2	b1	b0
	—	CRCREG[14:0]														
Value after reset:	0	0	0	0	0	0	0	0	0	0	0	0	0	0	0	0

Bit	Symbol	Bit Name	Description	R/W
b14 to b0	CRCREG[14:0]	CRC Calculation Data	A CRC value calculated based on the transmit message or receive message is indicated.	R
b15	—	Reserved	This bit is read as 0.	R

CRCREG[14:0] Bits (CRC Calculation Data)

When the CTRH.CTME bit is set to 1 (communication test mode is enabled), the CRC value calculated based on the transmit or receive message can be read. When the CTRH.CTME bit is set to 0 (communication test mode is disabled), these bits are read as 0.

30.2.9 Global Configuration Register L (GCFGL)

Address(es): RSCAN.GCFGL 000A 8322h

	b15	b14	b13	b12	b11	b10	b9	b8	b7	b6	b5	b4	b3	b2	b1	b0
	—	—	—	TSSS	TSP[3:0]				—	—	—	DCS	MME	DRE	DCE	TPRI
Value after reset:	0	0	0	0	0	0	0	0	0	0	0	0	0	0	0	0

Bit	Symbol	Bit Name	Description	R/W
b0	TPRI	Transmit Priority Select	0: ID priority 1: Transmit buffer number priority	R/W
b1	DCE	DLC Check Enable	0: DLC check is disabled. 1: DLC check is enabled.	R/W
b2	DRE	DLC Replacement Enable	0: DLC replacement is disabled. 1: DLC replacement is enabled.	R/W
b3	MME	Mirror Function Enable	0: Mirror function is disabled. 1: Mirror function is enabled.	R/W
b4	DCS	CAN Clock Source Select	0: PCLK 1: CANMCLK (obtained from the main clock)	R/W
b7 to b5	—	Reserved	These bits are read as 0. The write value should be 0.	R/W
b11 to b8	TSP[3:0]	Timestamp Clock Source Division	b11 b8 0 0 0 0: Not divided 0 0 0 1: Divided by 2 0 0 1 0: Divided by 4 0 0 1 1: Divided by 8 0 1 0 0: Divided by 16 0 1 0 1: Divided by 32 0 1 1 0: Divided by 64 0 1 1 1: Divided by 128 1 0 0 0: Divided by 256 1 0 0 1: Divided by 512 1 0 1 0: Divided by 1024 1 0 1 1: Divided by 2048 1 1 0 0: Divided by 4096 1 1 0 1: Divided by 8192 1 1 1 0: Divided by 16384 1 1 1 1: Divided by 32768	R/W
b12	TSSS	Timestamp Clock Source Select	0: PCLK 1: CAN bit time clock	R/W
b15 to b13	—	Reserved	These bits are read as 0. The write value should be 0.	R/W

Modify the GCFGL register only in global reset mode.

TPRI Bit (Transmit Priority Select)

This bit is used to set the transmit priority.

When this bit is set to 0, ID priority is selected and the transmit priority complies with the CAN bus arbitration rule (ISO 11898-1 standard). When this bit is set to 1, transmit buffer number priority is selected and the minimum number of transmit buffer specified for transmission takes precedence.

DCE Bit (DLC Check Enable)

Setting this bit to 1 makes the DLC check function available. Set the GAFLPHj.GAFLDLC[3:0] bits to 0000b before setting the DCE bit to 0.

DRE Bit (DLC Replacement Enable)

When the DRE bit is set to 1, the DLC value of the receive rule is stored in the buffer instead of the DLC value of the received message after the DLC value has passed through the DLC filter. In this case, a value of 00h is stored in the data byte that exceeds the DLC value of the receive rule.
When the DCE bit is set to 1 (DLC check is enabled), the DLC replacement function is available.

MME Bit (Mirror Function Enable)

Setting this bit to 1 makes the mirror function available.

DCS Bit (CAN Clock Source Select)

When this bit is set to 0, the peripheral clock (PCLK) divided by 2 is used as the CAN clock source (fCAN).
When this bit is set to 1, CANMCLK obtained from the EXTAL pin is used as the CAN clock source (fCAN).

TSP[3:0] Bits (Timestamp Clock Source Division)

The clock obtained by dividing the clock source selected by the TSSS bit by the TSP[3:0] value is the count source of the timestamp counter.

TSSS Bit (Timestamp Clock Source Select)

This bit is used to select a clock source of the timestamp counter.

30.2.10 Global Configuration Register H (GCFGH)

Address(es): RSCAN.GCFGH 000A 8324h

	b15	b14	b13	b12	b11	b10	b9	b8	b7	b6	b5	b4	b3	b2	b1	b0
	ITRCP[15:0]															
Value after reset:	0	0	0	0	0	0	0	0	0	0	0	0	0	0	0	0

Bit	Symbol	Bit Name	Description	R/W
b15 to b0	ITRCP[15:0]	Interval Timer Prescaler Set	If the set value is M, PCLK is frequency-divided by M. Setting 0000h is prohibited when the interval timer is in use.	R/W

Modify the GCFGH register only in global reset mode.

ITRCP[15:0] Bits (Interval Timer Prescaler Set)

These bits are used to set a clock source division value of the interval timer for FIFO buffers. For details, see section 30.5.3 (1) Interval Transmission Function.

30.2.11 Global Control Register L (GCTRL)

Address(es): RSCAN.GCTRL 000A 8326h

	b15	b14	b13	b12	b11	b10	b9	b8	b7	b6	b5	b4	b3	b2	b1	b0
	—	—	—	—	—	THLEIE	MEIE	DEIE	—	—	—	—	—	GSLPR	GMDC[1:0]	
Value after reset:	0	0	0	0	0	0	0	0	0	0	0	0	0	1	0	1

Bit	Symbol	Bit Name	Description	R/W
b1, b0	GMDC[1:0]	Global Mode Select	b1 b0 0 0: Global operating mode 0 1: Global reset mode 1 0: Global test mode 1 1: Setting prohibited	R/W
b2	GSLPR	Global Stop Mode	0: Other than global stop mode 1: Global stop mode	R/W
b7 to b3	—	Reserved	These bits are read as 0. The write value should be 0.	R/W
b8	DEIE	DLC Error Interrupt Enable	0: DLC error interrupt is disabled. 1: DLC error interrupt is enabled.	R/W
b9	MEIE	FIFO Message Lost Interrupt Enable	0: FIFO message lost interrupt is disabled. 1: FIFO message lost interrupt is enabled.	R/W
b10	THLEIE	Transmit History Buffer Overflow Interrupt Enable	0: Transmit history buffer overflow interrupt is disabled. 1: Transmit history buffer overflow interrupt is enabled.	R/W
b15 to b11	—	Reserved	These bits are read as 0. The write value should be 0.	R/W

GMDC[1:0] Bits (Global Mode Select)

These bits are used to select the mode of entire CAN module (global operating mode, global reset mode, or global test mode). For details, see section 30.3.1, Global Modes. Setting the GSLPR bit to 1 in global reset mode places the CAN module in global stop mode.

GSLPR Bit (Global Stop Mode)

Setting this bit to 1 places the CAN module in global stop mode.
Setting this bit to 0 makes the CAN module leave from global stop mode.
Do not modify this bit in global operating mode or in global test mode.

DEIE Bit (DLC Error Interrupt Enable)

When the GERFLL.DEF flag becomes 1 while the DEIE bit is 1, an interrupt request is generated. Modify this bit only in global reset mode.

MEIE Bit (FIFO Message Lost Interrupt Enable)

When the GERFLL.MES flag becomes 1 while the MEIE bit is 1, an interrupt request is generated. Modify this bit only in global reset mode.

THLEIE Bit (Transmit History Buffer Overflow Interrupt Enable)

When the GERFLL.THLES flag becomes 1 while the THLEIE bit is 1, an interrupt request is generated. Modify this bit only in global reset mode.

30.2.12 Global Control Register H (GCTRH)

Address(es): RSCAN.GCTRH 000A 8328h

	b15	b14	b13	b12	b11	b10	b9	b8	b7	b6	b5	b4	b3	b2	b1	b0
	—	—	—	—	—	—	—	—	—	—	—	—	—	—	—	TSRST
Value after reset:	0	0	0	0	0	0	0	0	0	0	0	0	0	0	0	0

Bit	Symbol	Bit Name	Description	R/W
b0	TSRST	Timestamp Counter Reset	Setting the TSRST bit to 1 resets the timestamp counter. This bit is read as 0.	R/W
b15 to b1	—	Reserved	These bits are read as 0. The write value should be 0.	R/W

TSRST Bit (Timestamp Counter Reset)

This bit is used to reset the timestamp counter. When this bit is set to 1, the GTSC register is set to 0000h.

30.2.13 Global Status Register (GSTS)

Address(es): RSCAN.GSTS 000A 832Ah

	b15	b14	b13	b12	b11	b10	b9	b8	b7	b6	b5	b4	b3	b2	b1	b0
	—	—	—	—	—	—	—	—	—	—	—	—	GRAMINIT	GSLPSTS	GHLTSTS	GRSTSTS
Value after reset:	0	0	0	0	0	0	0	0	0	0	0	0	1	1	0	1

Bit	Symbol	Bit Name	Description	R/W
b0	GRSTSTS	Global Reset Status Flag	0: Not in global reset mode 1: In global reset mode	R
b1	GHLTSTS	Global Test Status Flag	0: Not in global test mode 1: In global test mode	R
b2	GSLPSTS	Global Stop Status Flag	0: Not in global stop mode 1: In global stop mode	R
b3	GRAMINIT	CAN RAM Initialization Status Flag	0: CAN RAM initialization is completed. 1: CAN RAM initialization is ongoing.	R
b15 to b4	—	Reserved	These bits are read as 0.	R

GRSTSTS Flag (Global Reset Status Flag)

This flag becomes 1 when the CAN module has transitioned to global reset mode, and becomes 0 when the CAN module has exited global reset mode. This flag remains 1 even when the CAN module has transitioned from global reset mode to global stop mode.

GHLTSTS Flag (Global Test Status Flag)

This flag becomes 1 when the CAN module has transitioned to global test mode, and becomes 0 when the CAN module has exited global test mode.

GSLPSTS Flag (Global Stop Status Flag)

This flag becomes 1 when the CAN module has transitioned to global stop mode, and becomes 0 when the CAN module

has returned from global stop mode.

GRAMINIT Flag (CAN RAM Initialization Status Flag)

This flag indicates the initialization status of the CAN RAM.
This flag becomes 1 after the CAN module is enabled, and becomes 0 when CAN RAM initialization is completed.

30.2.14 Global Error Flag Register (GERFLL)

Address(es): RSCAN.GERFLL 000A 832Ch

	b7	b6	b5	b4	b3	b2	b1	b0
	—	—	—	—	—	THLES	MES	DEF
Value after reset:	0	0	0	0	0	0	0	0

Bit	Symbol	Bit Name	Description	R/W
b0	DEF	DLC Error Flag	0: No DLC error is present. 1: A DLC error is present.	R/(W) *1
b1	MES	FIFO Message Lost Status Flag	0: No FIFO message lost error is present. 1: A FIFO message lost error is present.	R
b2	THLES	Transmit History Buffer Overflow Status Flag	0: No transmit history buffer overflow is present. 1: A transmit history buffer overflow is present.	R
b7 to b3	—	Reserved	The read value is undefined. The write value should be 0.	R/W

Note 1. Only 0 can be written to this bit, to clear the flag. Writing 1 does not affect the flag value.

All flags in the GERFLL register become 0 in global reset mode.

DEF Flag (DLC Error Flag)

The DEF flag becomes 1 when an error has been detected during the DLC check. This flag can be set to 0 by writing 0 by the program.

MES Flag (FIFO Message Lost Status Flag)

The MES flag becomes 1 when any one of the RFSTSm.RFMLT flags or the CFSTS0.CFMLT flag becomes 1.
This flag becomes 0 when all RFSTSm.RFMLT flags and the CFSTS0.CFMLT flag are set to 0.

THLES Flag (Transmit History Buffer Overflow Status Flag)

The THLES flag becomes 1 when the THLSTS0.THLELT flag becomes 1.
This flag becomes 0 when the THLSTS0.THLELT flag is set to 0.

30.2.15 Global Transmit Interrupt Status Register (GTINTSTS)

Address(es): RSCAN.GTINTSTS 000A 8388h

	b15	b14	b13	b12	b11	b10	b9	b8	b7	b6	b5	b4	b3	b2	b1	b0
	—	—	—	—	—	—	—	—	—	—	—	—	THIF0	CFTIF0	TAIF0	TSIF0
Value after reset:	0	0	0	0	0	0	0	0	0	0	0	0	0	0	0	0

Bit	Symbol	Bit Name	Description	R/W
b0	TSIF0	RSCAN0 Transmit Buffer Interrupt Status Flag	0: No transmit buffer transmit complete interrupt request is present. 1: A transmit buffer transmit complete interrupt request is present.	R
b1	TAIF0	RSCAN0 Transmit Buffer Abort Interrupt Status Flag	0: No transmit buffer abort interrupt request is present. 1: A transmit buffer abort interrupt request is present.	R
b2	CFTIF0	RSCAN0 Transmit/Receive FIFO Interrupt Status Flag	0: No transmit/receive FIFO transmit interrupt request is present. 1: A transmit/receive FIFO transmit interrupt request is present.	R
b3	THIF0	RSCAN0 Transmit History Interrupt Status Flag	0: No transmit history interrupt request is present. 1: A transmit history interrupt request is present.	R
b15 to b4	—	Reserved	These bits are read as 0.	R

All flags in the GTINTSTS register become 0 in global reset or channel reset mode.

TSIF0 Flag (RSCAN0 Transmit Buffer Interrupt Status Flag)

The TSIF0 flag becomes 1 when the TMIEC.TMIEp bit is set to 1 (enabling interrupts) and the corresponding TMSTSp.TMTRF[1:0] flags become 10b (transmission has been completed without transmit abort request) or 11b (transmission has been completed with transmit abort request).
This flag becomes 0 when all TMSTSp.TMTRF[1:0] flags that satisfy a condition for setting the TSIF0 flag to 1 are set to 00b. This flag also becomes 0 when the TMIEC.TMIEp bit is set to 0.

TAIF0 Flag (RSCAN0 Transmit Buffer Abort Interrupt Status Flag)

The TAIF0 flag becomes 1 when the CTRH.TAIE bit is set to 1 (enabling interrupts) and the TMSTSp.TMTRF[1:0] flags become 01b (transmit abort has been completed).
This flag becomes 0 when the TMSTSp.TMTRF[1:0] flags, which indicate that the abort of transmission has been completed, are set to 00b.

CFTIF0 Flag (RSCAN0 Transmit/Receive FIFO Interrupt Status Flag)

The CFTIF0 flag becomes 1 when the CFCCL0.CFTXIE bit is set to 1 (enabling interrupts) and the CFSTS0.CFTXIF flag becomes 1 (interrupt request present).
This flag becomes 0 when the CFSTS0.CFTXIF flag is set to 0. This flag also becomes 0 when the CFCCL0.CFTXIE bit is set to 0.

THIF0 Flag (RSCAN0 Transmit History Interrupt Status Flag)

The THIF0 flag becomes 1 when the THLCC0.THLIE bit is set to 1 (enabling interrupts) and the THLSTS0.THLIF flag becomes 1 (interrupt request present).
This flag becomes 0 when the THLSTS0.THLIF flag is set to 0. This flag also becomes 0 when the THLCC0.THLIE bit is set to 0.

30.2.16 Timestamp Register (GTSC)

Address(es): RSCAN.GTSC 000A 832Eh

	b15	b14	b13	b12	b11	b10	b9	b8	b7	b6	b5	b4	b3	b2	b1	b0
	TS[15:0]															
Value after reset:	0	0	0	0	0	0	0	0	0	0	0	0	0	0	0	0

Bit	Symbol	Description	Counter Value	R/W
b15 to b0	TS[15:0]	The timestamp counter value can be read.	0000h to FFFFh	R

When the TS[15:0] bits are read, the read value shows the timestamp counter (16-bit free-running counter) value at that time. The TS[15:0] value is captured when the SOF is detected and then stored in the receive buffer or the FIFO buffer.
The timestamp counter is initialized in global reset mode.
The timestamp counter start timing and stop timing depend on the count source.

- When the GCFGL.TSSS value is 0 (PCLK is selected):
  The timestamp counter starts counting when the CAN module has transitioned to global operating mode.
  This counter stops counting when the CAN module has transitioned to global stop mode or global test mode.
- When the GCFGL.TSSS value is 1 (CAN bit time clock is selected):
  The timestamp counter starts counting when the corresponding channel has transitioned to channel communication mode.
  This counter stops counting when the corresponding channel has transitioned to channel reset mode or channel halt mode.

30.2.17 Receive Rule Number Configuration Register (GAFLCFG)

Address(es): RSCAN.GAFLCFG 000A 8330h

	b15	b14	b13	b12	b11	b10	b9	b8	b7	b6	b5	b4	b3	b2	b1	b0
	—	—	—	—	—	—	—	—	—	—	—	RNC0[4:0]				
Value after reset:	0	0	0	0	0	0	0	0	0	0	0	0	0	0	0	0

Bit	Symbol	Bit Name	Description	R/W
b4 to b0	RNC0[4:0]	RSCAN0 Receive Rule Number Set	Set the number of receive rules of channel 0. Set these bits to a value within a range of 00h to 10h.	R/W
b15 to b5	—	Reserved	These bits are read as 0. The write value should be 0.	R/W

Modify the GAFLCFG register only in global reset mode.
Up to 16 rules can be registered in the receive rule table.

RNC0[4:0] Bits (RSCAN0 Receive Rule Number Set)

These bits are used to set the number of rules to be registered in the channel 0 receive rule table.
Set these bits to a value within a range of 00h to 10h.

30.2.18 Receive Rule Entry Register jAL (GAFLIDLj) (j = 0 to 15)

Address(es): RSCAN.GAFLIDL0 000A 83A0h, RSCAN.GAFLIDL1 000A 83ACh, RSCAN.GAFLIDL2 000A 83B8h, RSCAN.GAFLIDL3 000A 83C4h, RSCAN.GAFLIDL4 000A 83D0h, RSCAN.GAFLIDL5 000A 83DCh, RSCAN.GAFLIDL6 000A 83E8h, RSCAN.GAFLIDL7 000A 83F4h, RSCAN.GAFLIDL8 000A 8400h, RSCAN.GAFLIDL9 000A 840Ch, RSCAN.GAFLIDL10 000A 8418h, RSCAN.GAFLIDL11 000A 8424h, RSCAN.GAFLIDL12 000A 8430h, RSCAN.GAFLIDL13 000A 843Ch, RSCAN.GAFLIDL14 000A 8448h, RSCAN.GAFLIDL15 000A 8454h

	b15	b14	b13	b12	b11	b10	b9	b8	b7	b6	b5	b4	b3	b2	b1	b0
	GAFLID[15:0]															
Value after reset:	0	0	0	0	0	0	0	0	0	0	0	0	0	0	0	0

Bit	Symbol	Bit Name	Description	R/W
b15 to b0	GAFLID[15:0]	ID Set L	Set the ID of the receive rule. For the standard ID, set the ID in b10 to b0 and set b15 to b11 to 0.	R/W

Modify the GAFLIDLj register only when the GRWCR.RPAGE bit is set to 0 in global reset mode.

GAFLID[15:0] Bits (ID Set L)

These bits are used to set the ID field of the receive rule. The ID value set by these bits is compared with the ID in the received message during the acceptance filter processing.

30.2.19 Receive Rule Entry Register jAH (GAFLIDHj) (j = 0 to 15)

Address(es): RSCAN.GAFLIDH0 000A 83A2h, RSCAN.GAFLIDH1 000A 83AEh, RSCAN.GAFLIDH2 000A 83BAh, RSCAN.GAFLIDH3 000A 83C6h, RSCAN.GAFLIDH4 000A 83D2h, RSCAN.GAFLIDH5 000A 83DEh, RSCAN.GAFLIDH6 000A 83EAh, RSCAN.GAFLIDH7 000A 83F6h, RSCAN.GAFLIDH8 000A 8402h, RSCAN.GAFLIDH9 000A 840Eh, RSCAN.GAFLIDH10 000A 841Ah, RSCAN.GAFLIDH11 000A 8426h, RSCAN.GAFLIDH12 000A 8432h, RSCAN.GAFLIDH13 000A 843Eh, RSCAN.GAFLIDH14 000A 844Ah, RSCAN.GAFLIDH15 000A 8456h

	b15	b14	b13	b12	b11	b10	b9	b8	b7	b6	b5	b4	b3	b2	b1	b0
	GAFLIDE	GAFLRTR	GAFLLB	GAFLID[28:16]												
Value after reset:	0	0	0	0	0	0	0	0	0	0	0	0	0	0	0	0

Bit	Symbol	Bit Name	Description	R/W
b12 to b0	GAFLID[28:16]	ID Set H	Set the ID of the receive rule. For the standard ID, set these bits to 0.	R/W
b13	GAFLLB	Receive Rule Target Message Select	0: When a message transmitted from another CAN node is received 1: When a message transmitted from own node is received	R/W
b14	GAFLRTR	RTR Select	0: Data frame 1: Remote frame	R/W
b15	GAFLIDE	IDE Select	0: Standard ID 1: Extended ID	R/W

Modify the GAFLIDHj register only when the GRWCR.RPAGE bit is set to 0 in global reset mode.

GAFLID[28:16] Bits (ID Set H)

These bits are used to set the ID field of the receive rule. The ID value set by these bits is compared with the ID in the received message during the acceptance filter processing.

GAFLLB Bit (Receive Rule Target Message Select)

When this bit is set to 0, data processing using the receive rule is performed when receiving messages transmitted from another CAN node.

When this bit is set to 1 when the mirror function is used, data processing using the receive rule is performed when receiving messages transmitted from the own CAN node.

GAFLRTR Bit (RTR Select)

This bit is used to select the frame format (data frame or remote frame) of the receive rule. This bit is compared with the RTR bit in the received message during the acceptance filter processing.

GAFLIDE Bit (IDE Select)

This bit is used to select the ID format (standard ID or extended ID) of the receive rule. This bit is compared with the IDE bit in the received message during the acceptance filter processing.

30.2.20 Receive Rule Entry Register jBL (GAFLMLj) (j = 0 to 15)

Address(es): RSCAN.GAFLML0 000A 83A4h, RSCAN.GAFLML1 000A 83B0h, RSCAN.GAFLML2 000A 83BCh, RSCAN.GAFLML3 000A 83C8h, RSCAN.GAFLML4 000A 83D4h, RSCAN.GAFLML5 000A 83E0h, RSCAN.GAFLML6 000A 83ECh, RSCAN.GAFLML7 000A 83F8h, RSCAN.GAFLML8 000A 8404h, RSCAN.GAFLML9 000A 8410h, RSCAN.GAFLML10 000A 841Ch, RSCAN.GAFLML11 000A 8428h, RSCAN.GAFLML12 000A 8434h, RSCAN.GAFLML13 000A 8440h, RSCAN.GAFLML14 000A 844Ch, RSCAN.GAFLML15 000A 8458h

	b15	b14	b13	b12	b11	b10	b9	b8	b7	b6	b5	b4	b3	b2	b1	b0
	GAFLIDM[15:0]															
Value after reset:	0	0	0	0	0	0	0	0	0	0	0	0	0	0	0	0

Bit	Symbol	Bit Name	Description	R/W
b15 to b0	GAFLIDM[15:0]	ID Mask L	0: The corresponding ID bit is not compared. 1: The corresponding ID bit is compared.	R/W

Modify the GAFLMLj register only when the GRWCR.RPAGE bit is set to 0 in global reset mode.

GAFLIDM[15:0] Bits (ID Mask L)

These bits are used to mask the corresponding ID bit of the receive rule.

30.2.21 Receive Rule Entry Register jBH (GAFLMHj) (j = 0 to 15)

Address(es): RSCAN.GAFLMH0 000A 83A6h, RSCAN.GAFLMH1 000A 83B2h, RSCAN.GAFLMH2 000A 83BEh, RSCAN.GAFLMH3 000A 83CAh, RSCAN.GAFLMH4 000A 83D6h, RSCAN.GAFLMH5 000A 83E2h, RSCAN.GAFLMH6 000A 83EEh, RSCAN.GAFLMH7 000A 83FAh, RSCAN.GAFLMH8 000A 8406h, RSCAN.GAFLMH9 000A 8412h, RSCAN.GAFLMH10 000A 841Eh, RSCAN.GAFLMH11 000A 842Ah, RSCAN.GAFLMH12 000A 8436h, RSCAN.GAFLMH13 000A 8442h, RSCAN.GAFLMH14 000A 844Eh, RSCAN.GAFLMH15 000A 845Ah

	b15	b14	b13	b12	b11	b10	b9	b8	b7	b6	b5	b4	b3	b2	b1	b0
	GAFLIDEM	GAFLRTRM	—	GAFLIDM[28:16]												
Value after reset:	0	0	0	0	0	0	0	0	0	0	0	0	0	0	0	0

Bit	Symbol	Bit Name	Description	R/W
b12 to b0	GAFLIDM[28:16]	ID Mask H	0: The corresponding ID bit is not compared. 1: The corresponding ID bit is compared.	R/W
b13	—	Reserved	This bit is read as 0. The write value should be 0.	R/W
b14	GAFLRTRM	RTR Mask	0: The RTR bit is not compared. 1: The RTR bit is compared	R/W
b15	GAFLIDEM	IDE Mask	0: The IDE bit is not compared. 1: The IDE bit is compared.	R/W

Modify the GAFLMHj register only when the GRWCR.RPAGE bit is set to 0 in global reset mode.

GAFLIDM[28:16] Bits (ID Mask H)

These bits are used to mask the corresponding ID bit of the receive rule.

GAFLRTRM Bit (RTR Mask)

This bit is used to mask the RTR bit of the receive rule.

GAFLIDEM Bit (IDE Mask)

When this bit is set to 1, filter processing is performed only for messages of the ID format specified by the GAFLIDHj.GAFLIDE bit.

When this bit is set to 0, it is regarded that all received messages have matched the specified ID format. To set the GAFLIDEM bit to 0, set the GAFLMHj.GAFLIDM[28:16] bits and the GAFLMLj.GAFLIDM[15:0] bits to all 0s.

30.2.22 Receive Rule Entry Register jCL (GAFLPLj) (j = 0 to 15)

Address(es): RSCAN.GAFLPL0 000A 83A8h, RSCAN.GAFLPL1 000A 83B4h, RSCAN.GAFLPL2 000A 83C0h, RSCAN.GAFLPL3 000A 83CCh, RSCAN.GAFLPL4 000A 83D8h, RSCAN.GAFLPL5 000A 83E4h, RSCAN.GAFLPL6 000A 83F0h, RSCAN.GAFLPL7 000A 83FCh, RSCAN.GAFLPL8 000A 8408h, RSCAN.GAFLPL9 000A 8414h, RSCAN.GAFLPL10 000A 8420h, RSCAN.GAFLPL11 000A 842Ch, RSCAN.GAFLPL12 000A 8438h, RSCAN.GAFLPL13 000A 8444h, RSCAN.GAFLPL14 000A 8450h, RSCAN.GAFLPL15 000A 845Ch

	b15	b14	b13	b12	b11	b10	b9	b8	b7	b6	b5	b4	b3	b2	b1	b0
	GAFLRMV	GAFLRMDP[6:0]							—	—	—	GAFLFDP4	—	—	GAFLFDP1	GAFLFDP0
Value after reset:	0	0	0	0	0	0	0	0	0	0	0	0	0	0	0	0

Bit	Symbol	Bit Name	Description	R/W
b0	GAFLFDP0	Receive FIFO Buffer Select 0	0: Not select a receive FIFO buffer 0 1: Select a receive FIFO buffer 0	R/W
b1	GAFLFDP1	Receive FIFO Buffer Select 1	0: Not select a receive FIFO buffer 1 1: Select a receive FIFO buffer 1	R/W
b3, b2	—	Reserved	These bits are read as 0. The write value should be 0.	R/W
b4	GAFLFDP4	RSCAN0 Transmit/Receive FIFO Buffer Select 0	0: Not select an RSCAN0 transmit/receive FIFO buffer 0 1: Select an RSCAN0 transmit/receive FIFO buffer 0	R/W
b7 to b5	—	Reserved	These bits are read as 0. The write value should be 0.	R/W
b14 to b8	GAFLRMDP[6:0]	Receive Buffer Number Select	Set the receive buffer number to store receive messages.	R/W
b15	GAFLRMV	Receive Buffer Enable	0: No receive buffer is used. 1: A receive buffer is used.	R/W

Modify the GAFLPLj register only when the GRWCR.RPAGE bit is set to 0 in global reset mode.

GAFLFDP0 Bit (Receive FIFO Buffer Select 0),
GAFLFDP1 Bit (Receive FIFO Buffer Select 1),
GAFLFDP4 Bit (RSCAN0 Transmit/Receive FIFO Buffer Select 0)

These bits are used to specify FIFO buffers that store receive messages that have passed through the filter. Up to two FIFO buffers are selectable. However, when the GAFLPLj.GAFLRMV bit is set to 1 (a receive buffer is used), up to one FIFO buffer is selectable. Only receive FIFO buffers and the transmit/receive FIFO buffer for which the CFCCH0.CFM[1:0] bits are set to 00b (receive mode) are selectable.

GAFLRMDP[6:0] Bits (Receive Buffer Number Select)

These bits are used to select the number of the receive buffer that stores receive messages that have passed through the filter when the GAFLRMV bit is set to 1. Set these bits to a value smaller than the value set by the RMNB.NRXMB[4:0] bits.

GAFLRMV Bit (Receive Buffer Enable)

When this bit is set to 1, receive messages that have passed through the filter are stored in the receive buffer selected by the GAFLRMDP[6:0] bits.

30.2.23 Receive Rule Entry Register jCH (GAFLPHj) (j = 0 to 15)

Address(es): RSCAN.GAFLPH0 000A 83AAh, RSCAN.GAFLPH1 000A 83B6h, RSCAN.GAFLPH2 000A 83C2h, RSCAN.GAFLPH3 000A 83CEh, RSCAN.GAFLPH4 000A 83DAh, RSCAN.GAFLPH5 000A 83E6h, RSCAN.GAFLPH6 000A 83F2h, RSCAN.GAFLPH7 000A 83FEh, RSCAN.GAFLPH8 000A 840Ah, RSCAN.GAFLPH9 000A 8416h, RSCAN.GAFLPH10 000A 8422h, RSCAN.GAFLPH11 000A 842Eh, RSCAN.GAFLPH12 000A 843Ah, RSCAN.GAFLPH13 000A 8446h, RSCAN.GAFLPH14 000A 8452h, RSCAN.GAFLPH15 000A 845Eh

	b15	b14	b13	b12	b11	b10	b9	b8	b7	b6	b5	b4	b3	b2	b1	b0
	GAFLDLC[3:0]				GAFLPTR[11:0]											
Value after reset:	0	0	0	0	0	0	0	0	0	0	0	0	0	0	0	0

Bit	Symbol	Bit Name	Description	R/W
b11 to b0	GAFLPTR[11:0]	Receive Rule Label	Set the 12-bit label information.	R/W
b15 to b12	GAFLDLC[3:0]	Receive Rule DLC	b15 b12 0 0 0 0: 0 or more data bytes (DLC check is disabled) 0 0 0 1: 1 or more data bytes 0 0 1 0: 2 or more data bytes 0 0 1 1: 3 or more data bytes 0 1 0 0: 4 or more data bytes 0 1 0 1: 5 or more data bytes 0 1 1 0: 6 or more data bytes 0 1 1 1: 7 or more data bytes 1 x x x: 8 or more data bytes	R/W

x: Don’t care

Modify the GAFLPHj register only when the GRWCR.RPAGE bit is set to 0 in global reset mode.

GAFLPTR[11:0] Bits (Receive Rule Label)

These bits are used to set a 12-bit label to be attached to messages that have passed through the filter. A label is attached when a message is stored in the receive buffer or the FIFO buffer.

GAFLDLC[3:0] Bits (Receive Rule DLC)

These bits are used to set the minimum data length necessary for receiving messages. If the data length of a message that is being filtered is equal to or larger than the value set by the GAFLDLC[3:0] bits, the message passes the DLC check. Setting these bits to 0000b disables the DLC check function allowing messages with any data length to pass the DLC check.

30.2.24 Receive Buffer Number Configuration Register (RMNB)

Address(es): RSCAN.RMNB 000A 8332h

	b15	b14	b13	b12	b11	b10	b9	b8	b7	b6	b5	b4	b3	b2	b1	b0
	—	—	—	—	—	—	—	—	—	—	—	NRXMB[4:0]				
Value after reset:	0	0	0	0	0	0	0	0	0	0	0	0	0	0	0	0

Bit	Symbol	Bit Name	Description	R/W
b4 to b0	NRXMB[4:0]	Receive Buffer Number Configuration	Set the number of receive buffers. Set a value of 0 to 16.	R/W
b15 to b5	—	Reserved	These bits are read as 0. The write value should be 0.	R/W

Modify the RMNB register only in global reset mode.

NRXMB[4:0] Bits (Receive Buffer Number Configuration)

These bits are used to set the total number of receive buffers of the CAN module. The maximum value is 16.
Setting these bits to all 0s makes receive buffers unavailable.

30.2.25 Receive Buffer Receive Complete Flag Register (RMND0)

Address(es): RSCAN.RMND0 000A 8334h

	b15	b14	b13	b12	b11	b10	b9	b8	b7	b6	b5	b4	b3	b2	b1	b0
	RMNS[15:0]															
Value after reset:	0	0	0	0	0	0	0	0	0	0	0	0	0	0	0	0

Bit	Symbol	Bit Name	Description	R/W
b15 to b0	RMNS[15:0]	Receive Buffer Receive Complete Flag n	0: Receive buffer n contains no new message (n = 0 to 15). 1: Receive buffer n contains a new message.	R/W

Write 0 to the RMND0 register in global operating mode or global test mode.

RMNS[15:0] Flags (Receive Buffer Receive Complete Flag n)

Each of the RMNS[15:0] flags becomes 1 when the processing for storing a message in the corresponding receive buffer starts.
To set these flags to 0, write 0 to the corresponding flag by the program. In this case, write this register in 16-bit unit to ensure that only the specified bit is set to 0 and the other bits are set to 1. These bits cannot be set to 0 while a message is being stored. It takes time of 10 clock cycles of PCLK for storing a message.
These flags become 0 in global reset mode.

30.2.26 Receive Buffer Register nAL (RMIDLn) (n = 0 to 15)

Address(es): RSCAN.RMIDL0 000A 83A0h, RSCAN.RMIDL1 000A 83B0h, RSCAN.RMIDL2 000A 83C0h, RSCAN.RMIDL3 000A 83D0h, RSCAN.RMIDL4 000A 83E0h, RSCAN.RMIDL5 000A 83F0h, RSCAN.RMIDL6 000A 8400h, RSCAN.RMIDL7 000A 8410h, RSCAN.RMIDL8 000A 8420h, RSCAN.RMIDL9 000A 8430h, RSCAN.RMIDL10 000A 8440h, RSCAN.RMIDL11 000A 8450h, RSCAN.RMIDL12 000A 8460h, RSCAN.RMIDL13 000A 8470h, RSCAN.RMIDL14 000A 8480h, RSCAN.RMIDL15 000A 8490h

	b15	b14	b13	b12	b11	b10	b9	b8	b7	b6	b5	b4	b3	b2	b1	b0
	RMID[15:0]															
Value after reset:	0	0	0	0	0	0	0	0	0	0	0	0	0	0	0	0

Bit	Symbol	Bit Name	Description	R/W
b15 to b0	RMID[15:0]	Receive Buffer ID Data L	The standard ID or extended ID of received message can be read. Read bits 10 to 0 for standard ID. Bits 15 to 11 are read as 0.	R

This register can be read when the GRWCR.RPAGE bit is 1.

RMID[15:0] Bits (Receive Buffer ID Data L)

These bits indicate the ID of the message stored in the receive buffer.

30.2.27 Receive Buffer Register nAH (RMIDHn) (n = 0 to 15)

Address(es): RSCAN.RMIDH0 000A 83A2h, RSCAN.RMIDH1 000A 83B2h, RSCAN.RMIDH2 000A 83C2h, RSCAN.RMIDH3 000A 83D2h, RSCAN.RMIDH4 000A 83E2h, RSCAN.RMIDH5 000A 83F2h, RSCAN.RMIDH6 000A 8402h, RSCAN.RMIDH7 000A 8412h, RSCAN.RMIDH8 000A 8422h, RSCAN.RMIDH9 000A 8432h, RSCAN.RMIDH10 000A 8442h, RSCAN.RMIDH11 000A 8452h, RSCAN.RMIDH12 000A 8462h, RSCAN.RMIDH13 000A 8472h, RSCAN.RMIDH14 000A 8482h, RSCAN.RMIDH15 000A 8492h

	b15	b14	b13	b12	b11	b10	b9	b8	b7	b6	b5	b4	b3	b2	b1	b0
	RMIDE	RMRTR	—	RMID[28:16]												
Value after reset:	0	0	0	0	0	0	0	0	0	0	0	0	0	0	0	0

Bit	Symbol	Bit Name	Description	R/W
b12 to b0	RMID[28:16]	Receive Buffer ID Data H	The standard ID or extended ID of received message can be read. For standard ID, these bits are read as 0.	R
b13	—	Reserved	This bit is read as 0.	R
b14	RMRTR	Receive Buffer RTR	0: Data frame 1: Remote frame	R
b15	RMIDE	Receive Buffer IDE	0: Standard ID 1: Extended ID	R

This register can be read when the GRWCR.RPAGE bit is 1.

RMID[28:16] Bits (Receive Buffer ID Data H)

These bits indicate the ID of the message stored in the receive buffer.

RMRTR Bit (Receive Buffer RTR)

This bit indicates the frame format (data frame or remote frame) of the message stored in the receive buffer.

RMIDE Bit (Receive Buffer IDE)

This bit indicates the ID format (standard ID or extended ID) of the message stored in the receive buffer.

30.2.28 Receive Buffer Register nBL (RMTSn) (n = 0 to 15)

Address(es): RSCAN.RMTS0 000A 83A4h, RSCAN.RMTS1 000A 83B4h, RSCAN.RMTS2 000A 83C4h, RSCAN.RMTS3 000A 83D4h, RSCAN.RMTS4 000A 83E4h, RSCAN.RMTS5 000A 83F4h, RSCAN.RMTS6 000A 8404h, RSCAN.RMTS7 000A 8414h, RSCAN.RMTS8 000A 8424h, RSCAN.RMTS9 000A 8434h, RSCAN.RMTS10 000A 8444h, RSCAN.RMTS11 000A 8454h, RSCAN.RMTS12 000A 8464h, RSCAN.RMTS13 000A 8474h, RSCAN.RMTS14 000A 8484h, RSCAN.RMTS15 000A 8494h

	b15	b14	b13	b12	b11	b10	b9	b8	b7	b6	b5	b4	b3	b2	b1	b0
	RMTS[15:0]															
Value after reset:	0	0	0	0	0	0	0	0	0	0	0	0	0	0	0	0

Bit	Symbol	Bit Name	Description	R/W
b15 to b0	RMTS[15:0]	Receive Buffer Timestamp Data	Timestamp value of the received message can be read.	R

This register can be read when the GRWCR.RPAGE bit is 1.

RMTS[15:0] Bits (Receive Buffer Timestamp Data)

These bits indicate the timestamp value of the message stored in the receive buffer.

30.2.29 Receive Buffer Register nBH (RMPTRn) (n = 0 to 15)

Address(es): RSCAN.RMPTR0 000A 83A6h, RSCAN.RMPTR1 000A 83B6h, RSCAN.RMPTR2 000A 83C6h, RSCAN.RMPTR3 000A 83D6h, RSCAN.RMPTR4 000A 83E6h, RSCAN.RMPTR5 000A 83F6h, RSCAN.RMPTR6 000A 8406h, RSCAN.RMPTR7 000A 8416h, RSCAN.RMPTR8 000A 8426h, RSCAN.RMPTR9 000A 8436h, RSCAN.RMPTR10 000A 8446h, RSCAN.RMPTR11 000A 8456h, RSCAN.RMPTR12 000A 8466h, RSCAN.RMPTR13 000A 8476h, RSCAN.RMPTR14 000A 8486h, RSCAN.RMPTR15 000A 8496h

	b15	b14	b13	b12	b11	b10	b9	b8	b7	b6	b5	b4	b3	b2	b1	b0
	RMDLC[3:0]				RMPTR[11:0]											
Value after reset:	0	0	0	0	0	0	0	0	0	0	0	0	0	0	0	0

Bit	Symbol	Bit Name	Description	R/W
b11 to b0	RMPTR[11:0]	Receive Buffer Label Data	Label information of the received message can be read.	R
b15 to b12	RMDLC[3:0]	Receive Buffer DLC Data	b15 b12 0 0 0 0: 0 data bytes 0 0 0 1: 1 data byte 0 0 1 0: 2 data bytes 0 0 1 1: 3 data bytes 0 1 0 0: 4 data bytes 0 1 0 1: 5 data bytes 0 1 1 0: 6 data bytes 0 1 1 1: 7 data bytes 1 x x x: 8 data bytes	R

x: Don’t care

This register can be read when the GRWCR.RPAGE bit is 1.

RMPTR[11:0] Bits (Receive Buffer Label Data)

These bits indicate the label information of the message stored in the receive buffer.

RMDLC[3:0] Bits (Receive Buffer DLC Data)

These bits indicate the data length of the message stored in the receive buffer.

30.2.30 Receive Buffer Register nCL (RMDF0n) (n = 0 to 15)

Address(es): RSCAN.RMDF00 000A 83A8h, RSCAN.RMDF01 000A 83B8h, RSCAN.RMDF02 000A 83C8h, RSCAN.RMDF03 000A 83D8h, RSCAN.RMDF04 000A 83E8h, RSCAN.RMDF05 000A 83F8h, RSCAN.RMDF06 000A 8408h, RSCAN.RMDF07 000A 8418h, RSCAN.RMDF08 000A 8428h, RSCAN.RMDF09 000A 8438h, RSCAN.RMDF010 000A 8448h, RSCAN.RMDF011 000A 8458h, RSCAN.RMDF012 000A 8468h, RSCAN.RMDF013 000A 8478h, RSCAN.RMDF014 000A 8488h, RSCAN.RMDF015 000A 8498h

	b15	b14	b13	b12	b11	b10	b9	b8	b7	b6	b5	b4	b3	b2	b1	b0
	RMDB1[7:0]								RMDB0[7:0]							
Value after reset:	0	0	0	0	0	0	0	0	0	0	0	0	0	0	0	0

Bit	Symbol	Bit Name	Description	R/W
b7 to b0	RMDB0[7:0]	Receive Buffer Data Byte 0	Data in the message stored in the receive buffer can be read.	R
b15 to b8	RMDB1[7:0]	Receive Buffer Data Byte 1		R

When the RMPTRn.RMDLC[3:0] value is smaller than 1000b, data bytes for which no data is set are read as 00h.
This register can be read when the GRWCR.RPAGE bit is 1.

30.2.31 Receive Buffer Register nCH (RMDF1n) (n = 0 to 15)

Address(es): RSCAN.RMDF10 000A 83AAh, RSCAN.RMDF11 000A 83BAh, RSCAN.RMDF12 000A 83CAh, RSCAN.RMDF13 000A 83DAh, RSCAN.RMDF14 000A 83EAh, RSCAN.RMDF15 000A 83FAh, RSCAN.RMDF16 000A 840Ah, RSCAN.RMDF17 000A 841Ah, RSCAN.RMDF18 000A 842Ah, RSCAN.RMDF19 000A 843Ah, RSCAN.RMDF110 000A 844Ah, RSCAN.RMDF111 000A 845Ah, RSCAN.RMDF112 000A 846Ah, RSCAN.RMDF113 000A 847Ah, RSCAN.RMDF114 000A 848Ah, RSCAN.RMDF115 000A 849Ah

	b15	b14	b13	b12	b11	b10	b9	b8	b7	b6	b5	b4	b3	b2	b1	b0
	RMDB3[7:0]								RMDB2[7:0]							
Value after reset:	0	0	0	0	0	0	0	0	0	0	0	0	0	0	0	0

Bit	Symbol	Bit Name	Description	R/W
b7 to b0	RMDB2[7:0]	Receive Buffer Data Byte 2	Data in the message stored in the receive buffer can be read.	R
b15 to b8	RMDB3[7:0]	Receive Buffer Data Byte 3		R

When the RMPTRn.RMDLC[3:0] value is smaller than 1000b, data bytes for which no data is set are read as 00h.
This register can be read when the GRWCR.RPAGE bit is 1.

30.2.32 Receive Buffer Register nDL (RMDF2n) (n = 0 to 15)

Address(es): RSCAN.RMDF20 000A 83ACh, RSCAN.RMDF21 000A 83BCh, RSCAN.RMDF22 000A 83CCh, RSCAN.RMDF23 000A 83DCh, RSCAN.RMDF24 000A 83ECh, RSCAN.RMDF25 000A 83FCh, RSCAN.RMDF26 000A 840Ch, RSCAN.RMDF27 000A 841Ch, RSCAN.RMDF28 000A 842Ch, RSCAN.RMDF29 000A 843Ch, RSCAN.RMDF210 000A 844Ch, RSCAN.RMDF211 000A 845Ch, RSCAN.RMDF212 000A 846Ch, RSCAN.RMDF213 000A 847Ch, RSCAN.RMDF214 000A 848Ch, RSCAN.RMDF215 000A 849Ch

	b15	b14	b13	b12	b11	b10	b9	b8	b7	b6	b5	b4	b3	b2	b1	b0
	RMDB5[7:0]								RMDB4[7:0]							
Value after reset:	0	0	0	0	0	0	0	0	0	0	0	0	0	0	0	0

Bit	Symbol	Bit Name	Description	R/W
b7 to b0	RMDB4[7:0]	Receive Buffer Data Byte 4	Data in the message stored in the receive buffer can be read.	R
b15 to b8	RMDB5[7:0]	Receive Buffer Data Byte 5		R

When the RMPTRn.RMDLC[3:0] value is smaller than 1000b, data bytes for which no data is set are read as 00h.
This register can be read when the GRWCR.RPAGE bit is 1.

30.2.33 Receive Buffer Register nDH (RMDF3n) (n = 0 to 15)

Address(es): RSCAN.RMDF30 000A 83AEh, RSCAN.RMDF31 000A 83BEh, RSCAN.RMDF32 000A 83CEh, RSCAN.RMDF33 000A 83DEh, RSCAN.RMDF34 000A 83EEh, RSCAN.RMDF35 000A 83FEh, RSCAN.RMDF36 000A 840Eh, RSCAN.RMDF37 000A 841Eh, RSCAN.RMDF38 000A 842Eh, RSCAN.RMDF39 000A 843Eh, RSCAN.RMDF310 000A 844Eh, RSCAN.RMDF311 000A 845Eh, RSCAN.RMDF312 000A 846Eh, RSCAN.RMDF313 000A 847Eh, RSCAN.RMDF314 000A 848Eh, RSCAN.RMDF315 000A 849Eh

	b15	b14	b13	b12	b11	b10	b9	b8	b7	b6	b5	b4	b3	b2	b1	b0
	RMDB7[7:0]								RMDB6[7:0]							
Value after reset:	0	0	0	0	0	0	0	0	0	0	0	0	0	0	0	0

Bit	Symbol	Bit Name	Description	R/W
b7 to b0	RMDB6[7:0]	Receive Buffer Data Byte 6	Data in the message stored in the receive buffer can be read.	R
b15 to b8	RMDB7[7:0]	Receive Buffer Data Byte 7		R

When the RMPTRn.RMDLC[3:0] value is smaller than 1000b, data bytes for which no data is set are read as 00h.
This register can be read when the GRWCR.RPAGE bit is 1.

30.2.34 Receive FIFO Control Register m (RFCCm) (m = 0, 1)

Address(es): RSCAN.RFCC0 000A 8338h, RSCAN.RFCC1 000A 833Ah

	b15	b14	b13	b12	b11	b10	b9	b8	b7	b6	b5	b4	b3	b2	b1	b0
	RFIGCV[2:0]			RFIM	—	RFDC[2:0]			—	—	—	—	—	—	RFIE	RFE
Value after reset:	0	0	0	0	0	0	0	0	0	0	0	0	0	0	0	0

Bit	Symbol	Bit Name	Description	R/W
b0	RFE	Receive FIFO Buffer Enable	0: No receive FIFO buffer is used. 1: Receive FIFO buffers are used.	R/W
b1	RFIE	Receive FIFO Interrupt Enable	0: Receive FIFO interrupt is disabled. 1: Receive FIFO interrupt is enabled.	R/W
b7 to b2	—	Reserved	These bits are read as 0. The write value should be 0.	R/W
b10 to b8	RFDC[2:0]	Receive FIFO Buffer Depth Configuration	b10 b8 0 0 0: 0 messages 0 0 1: 4 messages 0 1 0: 8 messages 0 1 1: 16 messages 1 0 0: Setting prohibited 1 0 1: Setting prohibited 1 1 0: Setting prohibited 1 1 1: Setting prohibited	R/W
b11	—	Reserved	This bit is read as 0. The write value should be 0.	R/W
b12	RFIM	Receive FIFO Interrupt Source Select	0: An interrupt occurs when the condition set by the RFIGCV[2:0] bits is met. 1: An interrupt occurs each time a message has been received.	R/W
b15 to b13	RFIGCV[2:0]	Receive FIFO Interrupt Request Timing Select	b15 b13 0 0 0: When FIFO is 1/8 full. 0 0 1: When FIFO is 2/8 full. 0 1 0: When FIFO is 3/8 full. 0 1 1: When FIFO is 4/8 full. 1 0 0: When FIFO is 5/8 full. 1 0 1: When FIFO is 6/8 full. 1 1 0: When FIFO is 7/8 full. 1 1 1: When FIFO is full.	R/W

RFE Bit (Receive FIFO Buffer Enable)

Setting the RFE bit to 1 makes receive FIFO buffers available. Setting this bit to 0 sets the RFSTSm.RFEMP flag to 1 (the receive FIFO buffer contains no unread message (buffer empty)). Modify this bit only in global operating mode or global test mode.

RFIE Bit (Receive FIFO Interrupt Enable)

Setting the RFIE bit to 1 enables receive FIFO interrupts. Modify this bit when the RFE bit is set to 0 (no receive FIFO buffer is used).

RFDC[2:0] Bits (Receive FIFO Buffer Depth Configuration)

These bits are used to select the number of messages that can be stored in a single receive FIFO buffer. If these bits are set to 000b, do not use any receive FIFO buffer. Modify these bits only in global reset mode.

RFIM Bit (Receive FIFO Interrupt Source Select)

This bit is used to select a FIFO interrupt source. Modify this bit only in global reset mode.

RFIGCV[2:0] Bits (Receive FIFO Interrupt Request Timing Select)

These bits are used to specify the fraction of the transmit/receive FIFO buffer (the number of messages is selected by the setting of the RFDC[2:0] bits) that must be filled for the FIFO buffer to generate a receive interrupt request when the RFIM bit is set to 0.

When the RFDC[2:0] bits are set to 001b (4 messages), set the RFIGCV[2:0] bits to 001b, 011b, 101b, or 111b. Modify these bits only in global reset mode.

30.2.35 Receive FIFO Status Register m (RFSTSm) (m = 0, 1)

Address(es): RSCAN.RFSTS0 000A 8340h, RSCAN.RFSTS1 000A 8342h

	b15	b14	b13	b12	b11	b10	b9	b8	b7	b6	b5	b4	b3	b2	b1	b0
	—	—	RFMC[5:0]						—	—	—	—	RFIF	RFMLT	RFFLL	RFEMP
Value after reset:	0	0	0	0	0	0	0	0	0	0	0	0	0	0	0	1

Bit	Symbol	Bit Name	Description	R/W
b0	RFEMP	Receive FIFO Buffer Empty Status Flag	0: The receive FIFO buffer contains unread messages. 1: The receive FIFO buffer contains no unread message (buffer empty).	R
b1	RFFLL	Receive FIFO Buffer Full Status Flag	0: The receive FIFO buffer is not full. 1: The receive FIFO buffer is full.	R
b2	RFMLT	Receive FIFO Message Lost Flag	0: No receive FIFO message is lost. 1: A receive FIFO message is lost.	R/(W) *1
b3	RFIF	Receive FIFO Interrupt Request Flag	0: No receive FIFO interrupt request is present. 1: A receive FIFO interrupt request is present.	R/(W) *1
b7 to b4	—	Reserved	These bits are read as 0. The write value should be 0.	R/W
b13 to b8	RFMC[5:0]	Receive FIFO Unread Message Counter	The number of unread messages stored in the receive FIFO buffer is displayed.	R
b15, b14	—	Reserved	These bits are read as 0. The write value should be 0.	R/W

Note 1. Only 0 can be written to this bit, to clear the flag. Writing 1 does not affect the flag value.

RFEMP Flag (Receive FIFO Buffer Empty Status Flag)

This flag becomes 1 when all messages in the receive FIFO buffer have been read. This flag also becomes 1 when the RFCCm.RFE bit is 0 or in global reset mode.

This flag becomes 0 when even a single received message has been stored in the receive FIFO buffer.

RFFLL Flag (Receive FIFO Buffer Full Status Flag)

This flag becomes 1 when the number of messages stored in the receive FIFO buffer matches the FIFO buffer depth set by the RFCCm.RFDC[2:0] bits.

If the number of messages stored in the receive FIFO buffer becomes smaller than the FIFO buffer depth set by the RFCCm.RFDC[2:0] bits, this flag becomes 0. This flag also becomes 0 when the RFCCm.RFE bit is set to 0 (no receive FIFO buffer is used) or in global reset mode.

RFMLT Flag (Receive FIFO Message Lost Flag)

This flag becomes 1 when it is attempted to store a new message while the receive FIFO buffer is full. In this case, the new message is discarded.

This flag becomes 0 in global reset mode or by writing 0 to this flag.

Modify this bit only in global operating mode or global test mode.

RFIF Flag (Receive FIFO Interrupt Request Flag)

This flag becomes 1 when the receive FIFO interrupt request generation conditions set by the RFCCm.RFIGCV[2:0] bits (m = 0, 1) and the RFCCm.RFIM bit are met. This flag becomes 0 in global reset mode or by writing 0 to this flag. Modify this bit only in global operating mode or global test mode.

RFMC[5:0] Flags (Receive FIFO Unread Message Counter)

These flags indicate the number of unread messages in the receive FIFO buffer. This flag becomes 00h when the RFCCm.RFE bit is set to 0.

30.2.36 Receive FIFO Pointer Control Register m (RFPCTRm) (m = 0, 1)

Address(es): RSCAN.RFPCTR0 000A 8348h, RSCAN.RFPCTR1 000A 834Ah

	b15	b14	b13	b12	b11	b10	b9	b8	b7	b6	b5	b4	b3	b2	b1	b0
	—	—	—	—	—	—	—	—	RFPC[7:0]							
Value after reset:	0	0	0	0	0	0	0	0	0	0	0	0	0	0	0	0

Bit	Symbol	Bit Name	Description	R/W
b7 to b0	RFPC[7:0]	Receive FIFO Pointer	When these bits are set to FFh, the read pointer moves to the next unread message in the receive FIFO buffer. The setting for these bits must be FFh.	W
b15 to b8	—	Reserved	The write value should be 0.	W

RFPC[7:0] Bits (Receive FIFO Pointer)

When the RFPC[7:0] bits are set to FFh, the read pointer moves to the next unread message in the receive FIFO buffer. At this time, the RFSTSm.RFMC[5:0] (receive FIFO unread message counter) value is decremented. Read the RFIDLm, RFIDHm, RFTSm, RFPTRm, and RFDF0m to RFDF3m registers to read messages in the receive FIFO buffer, and then write FFh to the RFPC[7:0] bits.

Write FFh to these bits when the RFCCm.RFE bit is set to 1 (receive FIFO buffers are used) and the RFSTSm.RFEMP flag is 0 (the receive FIFO buffer contains unread messages).

30.2.37 Receive FIFO Access Register mAL (RFIDLm) (m = 0, 1)

Address(es): RSCAN.RFIDL0 000A 85A0h, RSCAN.RFIDL1 000A 85B0h

	b15	b14	b13	b12	b11	b10	b9	b8	b7	b6	b5	b4	b3	b2	b1	b0
	RFID[15:0]															
Value after reset:	0	0	0	0	0	0	0	0	0	0	0	0	0	0	0	0

Bit	Symbol	Bit Name	Description	R/W
b15 to b0	RFID[15:0]	Receive FIFO Buffer ID Data L	The standard ID or extended ID of received message can be read. Read bits 10 to 0 for standard ID. Bits 15 to 11 are read as 0.	R

This register can be read when the GRWCR.RPAGE bit is 1.

RFID[15:0] Bits (Receive FIFO Buffer ID Data L)

These bits indicate the ID of the message stored in the receive FIFO buffer.

30.2.38 Receive FIFO Access Register mAH (RFIDHm) (m = 0, 1)

Address(es): RSCAN.RFIDH0 000A 85A2h, RSCAN.RFIDH1 000A 85B2h

	b15	b14	b13	b12	b11	b10	b9	b8	b7	b6	b5	b4	b3	b2	b1	b0
	RFIDE	RFRTR	—	RFID[28:16]												
Value after reset:	0	0	0	0	0	0	0	0	0	0	0	0	0	0	0	0

Bit	Symbol	Bit Name	Description	R/W
b12 to b0	RFID[28:16]	Receive FIFO Buffer ID Data H	The standard ID or extended ID of received message can be read. For standard ID, these bits are read as 0.	R
b13	—	Reserved	This bit is read as 0.	R
b14	RFRTR	Receive FIFO Buffer RTR	0: Data frame 1: Remote frame	R
b15	RFIDE	Receive FIFO Buffer IDE	0: Standard ID 1: Extended ID	R

This register can be read when the GRWCR.RPAGE bit is 1.

RFID[28:16] Bits (Receive FIFO Buffer ID Data H)

These bits indicate the ID of the message stored in the receive FIFO buffer.

RFRTR Bit (Receive FIFO Buffer RTR)

This bit indicates the frame format (data frame or remote frame) of the message stored in the receive FIFO buffer.

RFIDE Bit (Receive FIFO Buffer IDE)

This bit indicates the ID format (standard ID or extended ID) of the message stored in the receive FIFO buffer.

30.2.39 Receive FIFO Access Register mBL (RFTSm) (m = 0, 1)

Address(es): RSCAN.RFTS0 000A 85A4h, RSCAN.RFTS1 000A 85B4h

	b15	b14	b13	b12	b11	b10	b9	b8	b7	b6	b5	b4	b3	b2	b1	b0
	RFTS[15:0]															
Value after reset:	0	0	0	0	0	0	0	0	0	0	0	0	0	0	0	0

Bit	Symbol	Bit Name	Description	R/W
b15 to b0	RFTS[15:0]	Receive FIFO Buffer Timestamp Data	Timestamp value of the received message can be read.	R

This register can be read when the GRWCR.RPAGE bit is 1.

RFTS[15:0] Bits (Receive FIFO Buffer Timestamp Data)

These bits indicate the timestamp value of the message stored in the receive FIFO buffer.

30.2.40 Receive FIFO Access Register mBH (RFPTRm) (m = 0, 1)

Address(es): RSCAN.RFPTR0 000A 85A6h, RSCAN.RFPTR1 000A 85B6h

	b15	b14	b13	b12	b11	b10	b9	b8	b7	b6	b5	b4	b3	b2	b1	b0
	RFDLC[3:0]				RFPTR[11:0]											
Value after reset:	0	0	0	0	0	0	0	0	0	0	0	0	0	0	0	0

Bit	Symbol	Bit Name	Description	R/W
b11 to b0	RFPTR[11:0]	Receive FIFO Buffer Label Data	Label information of the received message can be read.	R
b15 to b12	RFDLC[3:0]	Receive FIFO Buffer DLC Data	b15 b12 0 0 0 0: 0 data bytes 0 0 0 1: 1 data byte 0 0 1 0: 2 data bytes 0 0 1 1: 3 data bytes 0 1 0 0: 4 data bytes 0 1 0 1: 5 data bytes 0 1 1 0: 6 data bytes 0 1 1 1: 7 data bytes 1 x x x: 8 data bytes	R

x: Don't care

This register can be read when the GRWCR.RPAGE bit is 1.

RFPTR[11:0] Bits (Receive FIFO Buffer Label Data)

These bits indicate the label information of the message stored in the receive FIFO buffer.

RFDLC[3:0] Bits (Receive FIFO Buffer DLC Data)

These bits indicate the data length of the message stored in the receive FIFO buffer.

30.2.41 Receive FIFO Access Register mCL (RFDF0m) (m = 0, 1)

Address(es): RSCAN.RFDF00 000A 85A8h, RSCAN.RFDF01 000A 85B8h

	b15	b14	b13	b12	b11	b10	b9	b8	b7	b6	b5	b4	b3	b2	b1	b0
	RFDB1[7:0]								RFDB0[7:0]							
Value after reset:	0	0	0	0	0	0	0	0	0	0	0	0	0	0	0	0

Bit	Symbol	Bit Name	Description	R/W
b7 to b0	RFDB0[7:0]	Receive FIFO Buffer Data Byte 0	Data in the message stored in the receive FIFO buffer can be read.	R
b15 to b8	RFDB1[7:0]	Receive FIFO Buffer Data Byte 1		R

When the RFPTRm.RFDLC[3:0] value is smaller than 1000b, data bytes for which no data is set are read as 00h.
This register can be read when the GRWCR.RPAGE bit is 1.

30.2.42 Receive FIFO Access Register mCH (RFDF1m) (m = 0, 1)

Address(es): RSCAN.RFDF10 000A 85AAh, RSCAN.RFDF11 000A 85BAh

	b15	b14	b13	b12	b11	b10	b9	b8	b7	b6	b5	b4	b3	b2	b1	b0
	RFDB3[7:0]								RFDB2[7:0]							
Value after reset:	0	0	0	0	0	0	0	0	0	0	0	0	0	0	0	0

Bit	Symbol	Bit Name	Description	R/W
b7 to b0	RFDB2[7:0]	Receive FIFO Buffer Data Byte 2	Data in the message stored in the receive FIFO buffer can be read.	R
b15 to b8	RFDB3[7:0]	Receive FIFO Buffer Data Byte 3		R

When the RFPTRm.RFDLC[3:0] value is smaller than 1000b, data bytes for which no data is set are read as 00h.
This register can be read when the GRWCR.RPAGE bit is 1.

30.2.43 Receive FIFO Access Register mDL (RFDF2m) (m = 0, 1)

Address(es): RSCAN.RFDF20 000A 85ACh, RSCAN.RFDF21 000A 85BCh

	b15	b14	b13	b12	b11	b10	b9	b8	b7	b6	b5	b4	b3	b2	b1	b0
	RFDB5[7:0]								RFDB4[7:0]							
Value after reset:	0	0	0	0	0	0	0	0	0	0	0	0	0	0	0	0

Bit	Symbol	Bit Name	Description	R/W
b7 to b0	RFDB4[7:0]	Receive FIFO Buffer Data Byte 4	Data in the message stored in the receive FIFO buffer can be read.	R
b15 to b8	RFDB5[7:0]	Receive FIFO Buffer Data Byte 5		R

When the RFPTRm.RFDLC[3:0] value is smaller than 1000b, data bytes for which no data is set are read as 00h.
This register can be read when the GRWCR.RPAGE bit is 1.

30.2.44 Receive FIFO Access Register mDH (RFDF3m) (m = 0, 1)

Address(es): RSCAN.RFDF30 000A 85AEh, RSCAN.RFDF31 000A 85BEh

	b15	b14	b13	b12	b11	b10	b9	b8	b7	b6	b5	b4	b3	b2	b1	b0
	RFDB7[7:0]								RFDB6[7:0]							
Value after reset:	0	0	0	0	0	0	0	0	0	0	0	0	0	0	0	0

Bit	Symbol	Bit Name	Description	R/W
b7 to b0	RFDB6[7:0]	Receive FIFO Buffer Data Byte 6	Data in the message stored in the receive FIFO buffer can be read.	R
b15 to b8	RFDB7[7:0]	Receive FIFO Buffer Data Byte 7		R

When the RFPTRm.RFDLC[3:0] value is smaller than 1000b, data bytes for which no data is set are read as 00h.
This register can be read when the GRWCR.RPAGE bit is 1.

30.2.45 Transmit/Receive FIFO Control Register 0L (CFCCL0)

Address(es): RSCAN0.CFCCL0 000A 8350h

	b15	b14	b13	b12	b11	b10	b9	b8	b7	b6	b5	b4	b3	b2	b1	b0
	CFIGCV[2:0]			CFIM	—	CFDC[2:0]			—	—	—	—	—	CFTXIE	CFRXIE	CFE
Value after reset:	0	0	0	0	0	0	0	0	0	0	0	0	0	0	0	0

Bit	Symbol	Bit Name	Description	R/W
b0	CFE	Transmit/Receive FIFO Buffer Enable	0: No transmit/receive FIFO buffer is used. 1: Transmit/receive FIFO buffers are used.	R/W
b1	CFRXIE	Transmit/Receive FIFO Receive Interrupt Enable	0: Transmit/receive FIFO receive interrupt is disabled. 1: Transmit/receive FIFO receive interrupt is enabled.	R/W
b2	CFTXIE	Transmit/Receive FIFO Transmit Interrupt Enable	0: Transmit/receive FIFO transmit interrupt is disabled. 1: Transmit/receive FIFO transmit interrupt is enabled.	R/W
b7 to b3	—	Reserved	These bits are read as 0. The write value should be 0.	R/W
b10 to b8	CFDC[2:0]	Transmit/Receive FIFO Buffer Depth Configuration	b10 b8 0 0 0: 0 messages 0 0 1: 4 messages 0 1 0: 8 messages 0 1 1: 16 messages 1 0 0: Setting prohibited 1 0 1: Setting prohibited 1 1 0: Setting prohibited 1 1 1: Setting prohibited	R/W
b11	—	Reserved	This bit is read as 0. The write value should be 0.	R/W
b12	CFIM	Transmit/Receive FIFO Interrupt Source Select	0: • Receive mode When the number of received messages has met the condition set by the CFIGCV[2:0] bits, a FIFO receive interrupt request is generated. • Transmit mode When the buffer becomes empty upon completion of message transmission, a FIFO transmit interrupt request is generated. 1: • Receive mode A FIFO receive interrupt request is generated each time a message has been received. • Transmit mode A FIFO transmit interrupt request is generated each time a message has been transmitted.	R/W
b15 to b13	CFIGCV[2:0]	Transmit/Receive FIFO Receive Interrupt Request Timing Select	b15 b13 0 0 0: When FIFO is 1/8 full. 0 0 1: When FIFO is 2/8 full. 0 1 0: When FIFO is 3/8 full. 0 1 1: When FIFO is 4/8 full. 1 0 0: When FIFO is 5/8 full. 1 0 1: When FIFO is 6/8 full. 1 1 0: When FIFO is 7/8 full. 1 1 1: When FIFO is full.	R/W

CFE Bit (Transmit/Receive FIFO Buffer Enable)

Setting this bit to 1 makes transmit/receive FIFO buffers available.

When this bit is set to 0 in transmit mode, if a message in the transmit/receive FIFO buffer is being transmitted or to be transmitted next, the transmit/receive FIFO buffer becomes empty after completion of transmission, CAN bus error detection, or arbitration lost. In other cases or in receive mode, the transmit/receive FIFO buffer becomes empty immediately.

This bit is set to 0 when the following conditions are met.

- Receive mode: Global reset mode
- Transmit mode: Channel reset mode

Modify this bit only in the following mode.

- Receive mode: Global operating mode or global test mode
- Transmit mode: Channel communication mode or channel halt mode

CFRXIE Bit (Transmit/Receive FIFO Receive Interrupt Enable)

When the CFSTS0.CFRXIF flag becomes 1 while this bit is 1, a transmit/receive FIFO receive interrupt request is generated.
Modify this bit with the CFE bit set to 0.

CFTXIE Bit (Transmit/Receive FIFO Transmit Interrupt Enable)

When the CFSTS0.CFTXIF flag becomes 1 while this bit is 1, a transmit/receive FIFO transmit interrupt request is generated.
Modify this bit with the CFE bit set to 0 (no transmit/receive FIFO buffer is used).

CFDC[2:0] Bits (Transmit/Receive FIFO Buffer Depth Configuration)

These bits are used to set the number of messages that can be stored in a single transmit/receive FIFO buffer.
If these bits are set to 000b, do not use any receive FIFO buffer. Modify these bits only in global reset mode.

CFIM Bit (Transmit/Receive FIFO Interrupt Source Select)

This bit is used to select a transmit/receive FIFO interrupt source. Modify this bit only in global reset mode.

CFIGCV[2:0] Bits (Transmit/Receive FIFO Receive Interrupt Request Timing Select)

These bits are used to specify the fraction of the transmit/receive FIFO buffer (the number of messages is selected by the setting of the CFDC[2:0] bits) that must be filled for the FIFO buffer to generate a receive interrupt request when the CFCCH0.CFM[1:0] bits are set to 00b (receive mode) and the CFIM bit is set to 0.
When the CFDC[2:0] bits are set to 001b (4 messages), set the CFIGCV[2:0] bits to 001b, 011b, 101b, or 111b.
Modify these bits only in global reset mode.

30.2.46 Transmit/Receive FIFO Control Register 0H (CFCCH0)

Address(es): RSCAN0.CFCCH0 000A 8352h

	b15	b14	b13	b12	b11	b10	b9	b8	b7	b6	b5	b4	b3	b2	b1	b0
	CFITT[7:0]								—	—	CFTML[1:0]		CFITR	CFITSS	CFM[1:0]	
Value after reset:	0	0	0	0	0	0	0	0	0	0	0	0	0	0	0	0

Bit	Symbol	Bit Name	Description	R/W
b1, b0	CFM[1:0]	Transmit/Receive FIFO Mode Select	b1 b0 0 0: Receive mode 0 1: Transmit mode 1 0: Setting prohibited 1 1: Setting prohibited	R/W
b2	CFITSS	Interval Timer Clock Source Select	0: Clock selected by the CFITR bit 1: CAN bit time clock	R/W
b3	CFITR	Transmit/Receive FIFO Interval Timer Resolution	0: Clock obtained by frequency-dividing PCLK by the ITRCP[15:0] value 1: Clock obtained by frequency-dividing PCLK by the ITRCP[15:0] value × 10	R/W
b5, b4	CFTML[1:0]	Transmit Buffer Link Configuration	Set the transmit buffer number to be linked to the transmit/receive FIFO buffer.	R/W
b7, b6	—	Reserved	These bits are read as 0. The write value should be 0.	R/W
b15 to b8	CFITT[7:0]	Message Transmission Interval Configuration	Set a message transmission interval. Set these bits to a value within a range of 00h to FFh.	R/W

CFM[1:0] Bits (Transmit/Receive FIFO Mode Select)

These bits are used to select transmit/receive FIFO mode. Modify these bits only in global reset mode.

CFITSS Bit (Interval Timer Clock Source Select)

Setting this bit to 0 selects the clock selected by the CFITR bit as the clock source for counting by the interval timer.
Setting this bit to 1 selects the CAN bit time clock as the clock source for counting by the interval timer. Set the CFCCL0.CFE bit to 0 (no transmit/receive FIFO buffer is used) before modifying the CFITSS bit.

CFITR Bit (Transmit/Receive FIFO Interval Timer Resolution)

This bit is valid when the setting of the CFITSS bit is 0.
Setting this bit to 0 selects the clock obtained by frequency-dividing PCLK by the GCFGH.ITRCP[15:0] value.
Setting this bit to 1 selects the clock obtained by frequency-dividing PCLK by the GCFGH.ITRCP[15:0] value × 10.
Modifying this bit with the CFCCL0.CFE bit set to 0 (no transmit/receive FIFO buffer is used).

CFTML[1:0] Bits (Transmit Buffer Link Configuration)

These bits are used to set the number of transmit buffer to be linked to the transmit/receive FIFO buffer when the CFM[1:0] bits are set to 01b (transmit mode).
Setting the CFCCL0.CFDC[2:0] bits to 001b or more enables the setting of the CFTML[1:0] bits.
Modify these bits only in global reset mode.

CFITT[7:0] Bits (Message Transmission Interval Configuration)

These bits are used to set a message transmission interval when transmitting messages continuously from a transmit/receive FIFO buffer whose CFM[1:0] bits are set to 01b (transmit mode).
Set the CFCCL0.CFE bit to 0 (no transmit/receive FIFO buffer is used) and then modify the CFITT[7:0] bits.

30.2.47 Transmit/Receive FIFO Status Register 0 (CFSTS0)

Address(es): RSCAN0.CFSTS0 000A 8358h

	b15	b14	b13	b12	b11	b10	b9	b8	b7	b6	b5	b4	b3	b2	b1	b0
	—	—	CFMC[5:0]						—	—	—	CFTXIF	CFRXIF	CFMLT	CFFLL	CFEMP
Value after reset:	0	0	0	0	0	0	0	0	0	0	0	0	0	0	0	1

Bit	Symbol	Bit Name	Description	R/W
b0	CFEMP	Transmit/Receive FIFO Buffer Empty Status Flag	0: The transmit/receive FIFO buffer contains messages. 1: The transmit/receive FIFO buffer contains no message (buffer empty).	R
b1	CFFLL	Transmit/Receive FIFO Buffer Full Status Flag	0: The transmit/receive FIFO buffer is not full. 1: The transmit/receive FIFO buffer is full.	R
b2	CFMLT	Transmit/Receive FIFO Message Lost Flag	0: No transmit/receive FIFO message is lost. 1: A transmit/receive FIFO message is lost.	R/(W) *1
b3	CFRXIF	Transmit/Receive FIFO Receive Interrupt Request Flag	0: No transmit/receive FIFO receive interrupt request is present. 1: A transmit/receive FIFO receive interrupt request is present.	R/(W) *1
b4	CFTXIF	Transmit/Receive FIFO Transmit Interrupt Request Flag	0: No transmit/receive FIFO transmit interrupt request is present. 1: A transmit/receive FIFO transmit interrupt request is present.	R/(W) *1
b7 to b5	—	Reserved	These bits are read as 0. The write value should be 0.	R/W
b13 to b8	CFMC[5:0]	Transmit/Receive FIFO Message Counter	The number of messages stored in the transmit/receive FIFO buffer is indicated.	R
b15, b14	—	Reserved	These bits are read as 0. The write value should be 0.	R/W

Note 1. Only 0 can be written to this bit, to clear the flag. Writing 1 does not affect the flag value.

CFEMP Flag (Transmit/Receive FIFO Buffer Empty Status Flag)

[Setting conditions]

- When the CFCCH0.CFM[1:0] value is 00b: All messages have been read, or global reset mode.
- When the CFCCH0.CFM[1:0] value is 01b: All messages have been transmitted, or channel reset mode.
- When the CFCCL0.CFE value is 0 (no transmit/receive FIFO buffer is used).
  Note that this flag becomes 1 after transmission completion, CAN bus error detection, or arbitration lost when the message in the transmit/receive FIFO buffer is being transmitted or to be transmitted next.

[Clearing conditions]

- When the CFCCH0.CFM[1:0] value is 00b: Any one of received messages has been stored in the transmit/receive FIFO buffer.
- When the CFCCH0.CFM[1:0] value is 01b: A value FFh has been written to the CFPCTR0 register after data was written to the CFIDL0, CFIDH0, CFPTR0, and CFDF00 to CFDF30 registers.

CFFLL Flag (Transmit/Receive FIFO Buffer Full Status Flag)

[Setting condition]

- When the number of messages stored in the transmit/receive FIFO buffer matches the FIFO buffer depth set by the CFCCL0.CFDC[2:0] bits.

[Clearing conditions]

- When the number of messages stored in the transmit/receive FIFO buffer becomes smaller than the FIFO buffer depth set by the CFCCL0.CFDC[2:0] bits.

- When the CFCCL0.CFE value is 0 (no transmit/receive FIFO buffer is used).
  Note that this flag becomes 0 after transmission completion, CAN bus error detection, or arbitration lost when the message in the transmit/receive FIFO buffer is being transmitted or to be transmitted next.
- When CFCCH0.CFM[1:0] value is 00b: In global reset mode
- When CFCCH0.CFM[1:0] value is 01b: In channel reset mode

CFMLT Flag (Transmit/Receive FIFO Message Lost Flag)

[Setting condition]

- When it is attempted to store a new message while the transmit/receive FIFO buffer is full. In this case, the new message is discarded.

[Clearing conditions]

- Write 0 to the CFMLT flag
- When CFCCH0.CFM[1:0] value is 00b: In global reset mode
- When CFCCH0.CFM[1:0] value is 01b: In channel reset mode

Set this flag to 0 in global operating mode or global test mode.

CFRXIF Flag (Transmit/Receive FIFO Receive Interrupt Request Flag)

[Setting condition]

- When CFCCH0.CFM[1:0] value is 00b and interrupt source setting the CFCCL0.CFIM bit is generated.

[Clearing conditions]

- Write 0 to the CFRXIF flag
- When CFCCH0.CFM[1:0] value is 00b: In global reset mode
- When CFCCH0.CFM[1:0] value is 01b: In channel reset mode

Set this flag to 0 in global operating mode or global test mode.

CFTXIF Flag (Transmit/Receive FIFO Transmit Interrupt Request Flag)

[Setting condition]

- When CFCCH0.CFM[1:0] value is 01b and interrupt source setting the CFCCL0.CFIM bit is generated.

[Clearing conditions]

- Write 0 to the CFTXIF flag
- When CFCCH0.CFM[1:0] value is 00b: In global reset mode
- When CFCCH0.CFM[1:0] value is 01b: In channel reset mode

Set this flag to 0 in global operating mode or global test mode.

CFMC[5:0] Flags (Transmit/Receive FIFO Message Counter)

The CFMC[5:0] flags indicate the following values that depend on the setting of the CFCCH0.CFM[1:0] bits.

- When CFM[1:0] value is 01b (transmit mode): Number of untransmitted messages in the buffer
- When CFM[1:0] value is 00b (receive mode): Number of unread received messages in the buffer

These bits are set to 0 when any of the following conditions is met.

- When CFCCH0.CFM[1:0] value is 00b: In global reset mode
- When CFCCH0.CFM[1:0] value is 01b: In channel reset mode

30.2.48 Transmit/Receive FIFO Pointer Control Register 0 (CFPCTR0)

Address(es): RSCAN0.CFPCTR0 000A 835Ch

	b15	b14	b13	b12	b11	b10	b9	b8	b7	b6	b5	b4	b3	b2	b1	b0
	—	—	—	—	—	—	—	—	CFPC[7:0]							
Value after reset:	0	0	0	0	0	0	0	0	0	0	0	0	0	0	0	0

Bit	Symbol	Bit Name	Description	R/W
b7 to b0	CFPC[7:0]	RSCAN0 Transmit/Receive FIFO Pointer	Receive mode: Writing FFh to these bits moves the read pointer to the next unread message in the transmit/receive FIFO buffer. Transmit mode: Writing FFh to these bits moves the write pointer to the next stage of the transmit/receive FIFO buffer.	W
b15 to b8	—	Reserved	The write value should be 0.	W

CFPC[7:0] Bits (RSCAN0 Transmit/Receive FIFO Pointer)

Receive mode (CFCCH0.CFM[1:0] value is 00b):
Writing FFh to the CFPC[7:0] bits moves the read pointer to the next unread message in the transmit/receive FIFO buffer. At this time, the CFSTS0.CFMC[5:0] value (transmit/receive FIFO message counter) is decremented. Read the CFIDL0, CFIDH0, CFTS0, CFPTR0, and CFDF00 to CFDF30 registers to read messages in the transmit/receive FIFO buffer, and then write FFh to the CFPC[7:0] bits.
Write FFh to these bits when the CFCCL0.CFE bit is 1 (transmit/receive FIFO buffers are used) and the CFSTS0.CFEMP flag is 0 (the transmit/receive FIFO buffer contains messages).

Transmit mode (CFCCH0.CFM[1:0] value is 01b):
Writing FFh to the CFPC[7:0] bits stores the data written to the CFIDL0, CFIDH0, CFPTR0, and CFDF00 to CFDF30 registers in the transmit/receive FIFO buffer and moves the write pointer to the next stage of the transmit/receive FIFO buffer. At this time, the CFSTS0.CFMC[5:0] value is incremented. Write transmit messages to the CFIDL0, CFIDH0, CFPTR0, and CFDF00 to CFDF30 registers and then write FFh to the CFPC[7:0] bits.
Write FFh to these bits when the CFCCL0.CFE bit is 1 and the CFSTS0.CFFLL flag is 0 (the transmit/receive FIFO buffer is not full).

30.2.49 Transmit/Receive FIFO Access Register 0AL (CFIDL0)

Address(es): RSCAN0.CFIDL0 000A 85E0h

	b15	b14	b13	b12	b11	b10	b9	b8	b7	b6	b5	b4	b3	b2	b1	b0
	CFID[15:0]															
Value after reset:	0	0	0	0	0	0	0	0	0	0	0	0	0	0	0	0

Bit	Symbol	Bit Name	Description	R/W
b15 to b0	CFID[15:0]	Transmit/Receive FIFO Buffer ID Data L	When CFCCH0.CFM[1:0] value is 01b (transmit mode): Set standard ID or extended ID. For standard ID, write an ID to b10 to b0 and write 0 to b15 to b11. When CFCCH0.CFM[1:0] value is 00b (receive mode): Standard ID or extended ID in the received message can be read. For standard ID, read b10 to b0. The value read from b15 to b11 are 0.	R/W

Modify this register only when the CFCCH0.CFM[1:0] value is 01b (transmit mode). This register is readable only when the CFCCH0.CFM[1:0] value is 00b (receive mode).
This register can be read/written when the GRWCR.RPAGE bit is 1.

CFID[15:0] Bits (Transmit/Receive FIFO Buffer ID Data L)

These bits indicate the ID of the received message stored in the transmit/receive FIFO buffer when the CFCCH0.CFM[1:0] value is 00b.
When the CFCCH0.CFM[1:0] value is 01b, set the ID of the message to be transmitted from the transmit/receive FIFO buffer.

30.2.50 Transmit/Receive FIFO Access Register 0AH (CFIDH0)

Address(es): RSCAN0.CFIDH0 000A 85E2h

	b15	b14	b13	b12	b11	b10	b9	b8	b7	b6	b5	b4	b3	b2	b1	b0
	CFIDE	CFRTR	THLEN	CFID[28:16]												
Value after reset:	0	0	0	0	0	0	0	0	0	0	0	0	0	0	0	0

Bit	Symbol	Bit Name	Description	R/W
b12 to b0	CFID[28:16]	Transmit/Receive FIFO Buffer ID Data H	When CFCCH0.CFM[1:0] value is 01b (transmit mode): Set standard ID or extended ID. For standard ID, write 0 to these bits. When CFCCH0.CFM[1:0] value is 00b (receive mode): Standard ID or extended ID in the received message can be read. For standard ID, these bits are read as 0.	R/W
b13	THLEN	Transmit History Data Store Enable	This bit is valid only when the CFCCH0.CFM[1:0] value is 01b (transmit mode). 0: Transmit history data is not stored in the buffer. 1: Transmit history data is stored in the buffer.	R/W
b14	CFRTR	Transmit/Receive FIFO Buffer RTR	0: Data frame 1: Remote frame	R/W
b15	CFIDE	Transmit/Receive FIFO Buffer IDE	0: Standard ID 1: Extended ID	R/W

Modify this register only when the CFCCH0.CFM[1:0] value is 01b (transmit mode).
This register is readable only when the CFCCH0.CFM[1:0] value is 00b (receive mode).
This register can be read/written when the GRWCR.RPAGE bit is 1.

CFID[28:16] Bits (Transmit/Receive FIFO Buffer ID Data H)

These bits indicate the ID of the received message stored in the transmit/receive FIFO buffer when the CFCCH0.CFM[1:0] value is 00b.
When the CFCCH0.CFM[1:0] value is 01b, set the ID of the message to be transmitted from the transmit/receive FIFO buffer.

THLEN Bit (Transmit History Data Store Enable)

When this bit is set to 1, the transmit history data (label information, buffer number, and buffer type) of transmit messages is stored in the transmit history buffer after transmission is completed.
This bit is enabled when the CFCCH0.CFM[1:0] value is 01b (transmit mode).

CFRTR Bit (Transmit/Receive FIFO Buffer RTR)

This bit indicates the data format (data frame or remote frame) of the received message stored in the transmit/receive FIFO buffer when the CFCCH0.CFM[1:0] value is 00b. When the CFCCH0.CFM[1:0] value is 01b, set the data format of the message to be transmitted from the transmit/receive FIFO buffer.

CFIDE Bit (Transmit/Receive FIFO Buffer IDE)

This bit indicates the ID format (standard ID or extended ID) of the received message stored in the transmit/receive FIFO buffer when the CFCCH0.CFM[1:0] value is 00b. When the CFCCH0.CFM[1:0] value is 01b, set the ID format of the message to be transmitted from the transmit/receive FIFO buffer.

30.2.51 Transmit/Receive FIFO Access Register 0BL (CFTS0)

Address(es): RSCAN0.CFTS0 000A 85E4h

	b15	b14	b13	b12	b11	b10	b9	b8	b7	b6	b5	b4	b3	b2	b1	b0
	CFTS[15:0]															
Value after reset:	0	0	0	0	0	0	0	0	0	0	0	0	0	0	0	0

Bit	Symbol	Bit Name	Description	R/W
b15 to b0	CFTS[15:0]	Transmit/Receive FIFO Buffer Timestamp Data	These bits are valid only when the CFCCH0.CFM[1:0] value is 00b (receive mode). The timestamp value of the received message can be read.	R

This register can be read when the GRWCR.RPAGE bit is 1.

CFTS[15:0] Bits (Transmit/Receive FIFO Buffer Timestamp Data)

These bits indicate the timestamp value of the message stored in the transmit/receive FIFO buffer.
These bits are valid when the CFCCH0.CFM[1:0] value is 00b.

30.2.52 Transmit/Receive FIFO Access Register 0BH (CFPTR0)

Address(es): RSCAN0.CFPTR0 000A 85E6h

	b15	b14	b13	b12	b11	b10	b9	b8	b7	b6	b5	b4	b3	b2	b1	b0
	CFDLC[3:0]				CFPTR[11:0]											
Value after reset:	0	0	0	0	0	0	0	0	0	0	0	0	0	0	0	0

Bit	Symbol	Bit Name	Description	R/W
b11 to b0	CFPTR[11:0]	Transmit/Receive FIFO Buffer Label Data	When CFCCH0.CFM[1:0] value is 01b (transmit mode): Set the label information to be stored in the transmit history buffer. Only CFPTR[7:0] bits are valid. When CFCCH0.CFM[1:0] value is 00b (receive mode): The label information of the received message can be read.	R/W
b15 to b12	CFDLC[3:0]	Transmit/Receive FIFO Buffer DLC Data	b15 b12 0 0 0 0: 0 data bytes 0 0 0 1: 1 data byte 0 0 1 0: 2 data bytes 0 0 1 1: 3 data bytes 0 1 0 0: 4 data bytes 0 1 0 1: 5 data bytes 0 1 1 0: 6 data bytes 0 1 1 1: 7 data bytes 1 x x x: 8 data bytes	R/W

x: Don’t care

Modify this register only when the CFCCH0.CFM[1:0] value is 01b (transmit mode).
This register is readable only when the CFCCH0.CFM[1:0] value is 00b (receive mode).
This register can be read/written when the GRWCR.RPAGE bit is 1.

CFPTR[11:0] Bits (Transmit/Receive FIFO Buffer Label Data)

These bits indicate the label information attached to the received message stored in the transmit/receive FIFO buffer when the CFCCH0.CFM[1:0] value is 00b. When the CFCCH0.CFM[1:0] value is 01b, the CFPTR[7:0] value is stored in the transmit history buffer when message transmission has been completed.

CFDLC[3:0] Bits (Transmit/Receive FIFO Buffer DLC Data)

These bits indicate the data length of the received message stored in the transmit/receive FIFO buffer when the CFCCH0.CFM[1:0] value is 00b. When the CFCCH0.CFM[1:0] value is 01b, set the data length of the message to be transmitted from the transmit/receive FIFO buffer.
If 9-byte or more data length is set, 8 bytes of data is actually transmitted.

30.2.53 Transmit/Receive FIFO Access Register 0CL (CFDF00)

Address(es): RSCAN0.CFDF00 000A 85E8h

	b15	b14	b13	b12	b11	b10	b9	b8	b7	b6	b5	b4	b3	b2	b1	b0
	CFDB1[7:0]								CFDB0[7:0]							
Value after reset:	0	0	0	0	0	0	0	0	0	0	0	0	0	0	0	0

Bit	Symbol	Bit Name	Description	R/W
b7 to b0	CFDB0[7:0]	Transmit/Receive FIFO Buffer Data Byte 0	When CFCCH0.CFM[1:0] value is 01b (transmit mode): Set the transmit/receive FIFO buffer data. When CFCCH0.CFM[1:0] value is 00b (receive mode): The message data stored in the transmit/receive FIFO buffer can be read.	R/W
b15 to b8	CFDB1[7:0]	Transmit/Receive FIFO Buffer Data Byte 1		R/W

Modify this register only when the CFCCH0.CFM[1:0] value is 01b.
This register is readable only when the CFCCH0.CFM[1:0] value is 00b. When the CFPTR0.CFDLC[3:0] value is smaller than 1000b, data bytes for which no data is set are read as 00h.
This register can be read/written when the GRWCR.RPAGE bit is 1.

30.2.54 Transmit/Receive FIFO Access Register 0CH (CFDF10)

Address(es): RSCAN0.CFDF10 000A 85EAh

	b15	b14	b13	b12	b11	b10	b9	b8	b7	b6	b5	b4	b3	b2	b1	b0
	CFDB3[7:0]								CFDB2[7:0]							
Value after reset:	0	0	0	0	0	0	0	0	0	0	0	0	0	0	0	0

Bit	Symbol	Bit Name	Description	R/W
b7 to b0	CFDB2[7:0]	Transmit/Receive FIFO Buffer Data Byte 2	When CFCCH0.CFM[1:0] value is 01b (transmit mode): Set the transmit/receive FIFO buffer data. When CFCCH0.CFM[1:0] value is 00b (receive mode): The message data stored in the transmit/receive FIFO buffer can be read.	R/W
b15 to b8	CFDB3[7:0]	Transmit/Receive FIFO Buffer Data Byte 3		R/W

Modify this register only when the CFCCH0.CFM[1:0] value is 01b.
This register is readable only when the CFCCH0.CFM[1:0] value is 00b. When the CFPTR0.CFDLC[3:0] value is smaller than 1000b, data bytes for which no data is set are read as 00h.
This register can be read/written when the GRWCR.RPAGE bit is 1.

30.2.55 Transmit/Receive FIFO Access Register 0DL (CFDF20)

Address(es): RSCAN0.CFDF20 000A 85ECh

	b15	b14	b13	b12	b11	b10	b9	b8	b7	b6	b5	b4	b3	b2	b1	b0
	CFDB5[7:0]								CFDB4[7:0]							
Value after reset:	0	0	0	0	0	0	0	0	0	0	0	0	0	0	0	0

Bit	Symbol	Bit Name	Description	R/W
b7 to b0	CFDB4[7:0]	Transmit/Receive FIFO Buffer Data Byte 4	When CFCCH0.CFM[1:0] value is 01b (transmit mode): Set the transmit/receive FIFO buffer data. When CFCCH0.CFM[1:0] value is 00b (receive mode): The message data stored in the transmit/receive FIFO buffer can be read.	R/W
b15 to b8	CFDB5[7:0]	Transmit/Receive FIFO Buffer Data Byte 5		R/W

Modify this register only when the CFCCH0.CFM[1:0] value is 01b.
This register is readable only when the CFCCH0.CFM[1:0] value is 00b. When the CFPTR0.CFDLC[3:0] value is smaller than 1000b, data bytes for which no data is set are read as 00h.
This register can be read/written when the GRWCR.RPAGE bit is 1.

30.2.56 Transmit/Receive FIFO Access Register 0DH (CFDF30)

Address(es): RSCAN0.CFDF30 000A 85EEh

	b15	b14	b13	b12	b11	b10	b9	b8	b7	b6	b5	b4	b3	b2	b1	b0
	CFDB7[7:0]								CFDB6[7:0]							
Value after reset:	0	0	0	0	0	0	0	0	0	0	0	0	0	0	0	0

Bit	Symbol	Bit Name	Description	R/W
b7 to b0	CFDB6[7:0]	Transmit/Receive FIFO Buffer Data Byte 6	When CFCCH0.CFM[1:0] value is 01b (transmit mode): Set the transmit/receive FIFO buffer data. When CFCCH0.CFM[1:0] value is 00b (receive mode): The message data stored in the transmit/receive FIFO buffer can be read.	R/W
b15 to b8	CFDB7[7:0]	Transmit/Receive FIFO Buffer Data Byte 7		R/W

Modify this register only when the CFCCH0.CFM[1:0] value is 01b.
This register is readable only when the CFCCH0.CFM[1:0] value is 00b. When the CFPTR0.CFDLC[3:0] value is smaller than 1000b, data bytes for which no data is set are read as 00h.
This register can be read/written when the GRWCR.RPAGE bit is 1.

30.2.57 Receive FIFO Message Lost Status Register (RFMSTS)

Address(es): RSCAN.RFMSTS 000A 8360h

	b7	b6	b5	b4	b3	b2	b1	b0
	—	—	—	—	—	—	RF1MLT	RF0MLT
Value after reset:	0	0	0	0	0	0	0	0

Bit	Symbol	Bit Name	Description	R/W
b0	RF0MLT	Receive FIFO Buffer 0 Message Lost Status Flag	0: No receive FIFO buffer m message is lost (m = 0, 1). 1: A receive FIFO buffer m message is lost.	R
b1	RF1MLT	Receive FIFO Buffer 1 Message Lost Status Flag		R
b7 to b2	—	Reserved	These bits are read as 0.	R

The RFMSTS register is set to 00h in global reset mode.

RFmMLT Flag (Receive FIFO Buffer m Message Lost Status Flag)

The RFmMLT flag becomes 1 when the RFSTSm.RFMLT flag becomes 1 (a receive FIFO message is lost). When the RFSTSm.RFMLT flag is set to 0, the RFmMLT flag becomes 0.

30.2.58 Transmit/Receive FIFO Message Lost Status Register (CFMSTS)

Address(es): RSCAN0.CFMSTS 000A 8361h

	b7	b6	b5	b4	b3	b2	b1	b0
	—	—	—	—	—	—	—	CF0MLT
Value after reset:	0	0	0	0	0	0	0	0

Bit	Symbol	Bit Name	Description	R/W
b0	CF0MLT	RSCAN0 Transmit/Receive FIFO Buffer 0 Message Lost Status Flag	0: No RSCAN0 transmit/receive FIFO buffer 0 message is lost. 1: An RSCAN0 transmit/receive FIFO buffer 0 message is lost.	R
b7 to b1	—	Reserved	These bits are read as 0.	R

The CFMSTS register is set to 00h in global reset mode.

CF0MLT Flag (RSCAN0 Transmit/Receive FIFO Buffer 0 Message Lost Status Flag)

The CF0MLT flag becomes 1 when the CFSTS0.CFMLT flag becomes 1 (a transmit/receive FIFO message is lost). When the CFSTS0.CFMLT flag is set to 0, the CF0MLT flag becomes 0.

30.2.59 Receive FIFO Interrupt Status Register (RFISTS)

Address(es): RSCAN.RFISTS 000A 8362h

	b7	b6	b5	b4	b3	b2	b1	b0
	—	—	—	—	—	—	RF1IF	RF0IF
Value after reset:	0	0	0	0	0	0	0	0

Bit	Symbol	Bit Name	Description	R/W
b0	RF0IF	Receive FIFO Buffer 0 Interrupt Request Status Flag	0: No receive FIFO buffer m interrupt request is present (m = 0, 1). 1: A receive FIFO buffer m interrupt request is present.	R
b1	RF1IF	Receive FIFO Buffer 1 Interrupt Request Status Flag		R
b7 to b2	—	Reserved	These bits are read as 0.	R

The RFISTS register is set to 00h in global reset mode.

RFmIF Flag (Receive FIFO Buffer m Interrupt Request Status Flag)

The RFmIF flag becomes 1 when the RFSTSm.RFIF flag becomes 1 (a receive FIFO interrupt request is present). When the RFSTSm.RFIF flag is set to 0, the RFmIF flag becomes 0.

30.2.60 Transmit/Receive FIFO Receive Interrupt Status Register (CFISTS)

Address(es): RSCAN.CFISTS 000A 8363h

	b7	b6	b5	b4	b3	b2	b1	b0
	—	—	—	—	—	—	—	CF0IF
Value after reset:	0	0	0	0	0	0	0	0

Bit	Symbol	Bit Name	Description	R/W
b0	CF0IF	RSCAN0 Transmit/Receive FIFO Buffer 0 Receive Interrupt Request Status Flag	0: No RSCAN0 transmit/receive FIFO buffer 0 receive interrupt request is present. 1: An RSCAN0 transmit/receive FIFO buffer 0 receive interrupt request is present.	R
b7 to b1	—	Reserved	These bits are read as 0.	R

The CFISTS register is set to 00h in global reset mode.

CF0IF Flag (RSCAN0 Transmit/Receive FIFO Buffer 0 Receive Interrupt Request Status Flag)

The CF0IF flag becomes 1 when the CFSTS0.CFRXIF flag becomes 1 (a transmit/receive FIFO receive interrupt request is present). When the CFSTS0.CFRXIF flag is set to 0, the CF0IF flag becomes 0.

30.2.61 Transmit Buffer Control Register p (TMCp) (p = 0 to 3)

Address(es): RSCAN0.TMC0 000A 8364h, RSCAN0.TMC1 000A 8365h, RSCAN0.TMC2 000A 8366h, RSCAN0.TMC3 000A 8367h

	b7	b6	b5	b4	b3	b2	b1	b0
	—	—	—	—	—	TMOM	TMTAR	TMTR
Value after reset:	0	0	0	0	0	0	0	0

Bit	Symbol	Bit Name	Description	R/W
b0	TMTR	Transmit Request	0: Transmission is not requested. 1: Transmission is requested.	R/(W) *1
b1	TMTAR	Transmit Abort Request	0: Transmit abort is not requested. 1: Transmit abort is requested.	R/(W) *1
b2	TMOM	One-Shot Transmission Enable	0: One-shot transmission is disabled. 1: One-shot transmission is enabled.	R/W
b7 to b3	—	Reserved	These bits are read as 0. The write value should be 0.	R/W

Note 1. Only 1 can be written to this bit. Writing 0 does not affect the bit value.

When the TMCp register meets the following condition, set it to 00h.

- The TMCp register corresponds to the transmit buffer number selected by the CFCCH0.CFTML[1:0] bits.

Bits in the TMCp register become all 0s in channel reset mode. Modify the TMCp register (p = 0 to 3) only in channel communication mode or channel halt mode.

TMTR Bit (Transmit Request)

Setting this bit to 1 transmits the message stored in the transmit buffer.
The TMTR bit becomes 0 when any of the following conditions is met, but does not become 0 by writing 0 by the program.

- Transmission has been completed.
- Transmit abort has been completed by setting the TMTAR bit to 1.
- An error or arbitration lost has been detected with the TMOM bit set to 1.

Set the TMTR bit to 1 when the TMSTSp.TMTRF[1:0] value is 00b.

TMTAR Bit (Transmit Abort Request)

Setting this bit to 1 generates a transmit abort request for the message stored in the transmit buffer. However, a message that is being transmitted or to be transmitted next cannot be aborted.
When the TMTR bit becomes 1, the TMTAR bit can be set to 1.
The TMTAR bit is set to 0 when any of the following conditions is met, but does not become 0 by writing 0 by the program.

- Transmission has been completed.
- Transmit abort has been completed.
- An error or arbitration lost has been detected.

If this bit becomes 0 at the timing when the program writes 1 to this bit, this bit becomes 0.

TMOM Bit (One-Shot Transmission Enable)

Setting this bit to 1 enables one-shot transmission. When transmission fails, retransmission defined in the CAN protocol is not performed.

Modify the TMOM bit when the TMSTSp.TMTRM flag is 0. To set the TMOM bit to 1, also set the TMTR bit together.

30.2.62 Transmit Buffer Status Register p (TMSTSp) (p = 0 to 3)

Address(es): RSCAN0.TMSTS0 000A 836Ch, RSCAN0.TMSTS1 000A 836Dh, RSCAN0.TMSTS2 000A 836Eh, RSCAN0.TMSTS3 000A 836Fh

	b7	b6	b5	b4	b3	b2	b1	b0
	—	—	—	TMTARM	TMTRM	TMTRF[1:0]		TMTSTS
Value after reset:	0	0	0	0	0	0	0	0

Bit	Symbol	Bit Name	Description	R/W
b0	TMTSTS	Transmit Buffer Transmit Status Flag	0: Transmission is not in progress. 1: Transmission is in progress.	R
b2, b1	TMTRF[1:0]	Transmit Buffer Transmit Result Flag	b2 b1 0 0: Transmission is in progress or no transmit request is present. 0 1: Transmit abort has been completed. 1 0: Transmission has been completed (without transmit abort request). 1 1: Transmission has been completed (with transmit abort request).	R/W
b3	TMTRM	Transmit Buffer Transmit Request Status Flag	0: No transmit request is present. 1: A transmit request is present.	R
b4	TMTARM	Transmit Buffer Transmit Abort Request Status Flag	0: No transmit abort request is present. 1: A transmit abort request is present.	R
b7 to b5	—	Reserved	These bits are read as 0. The write value should be 0.	R

The TMSTSp register becomes all 0s in channel reset mode.

TMTSTS Flag (Transmit Buffer Transmit Status Flag)

This flag becomes 1 when transmission from the transmit buffer starts, and becomes 0 when transmission from the transmit buffer has been completed or terminated due to a bus error or arbitration lost.

TMTRF[1:0] Flags (Transmit Buffer Transmit Result Flag)

These flags indicate the result of transmission from the transmit buffer.
00b: Transmission is in progress or no transmit request is present.
01b: Transmission from the transmit buffer was aborted.
10b: Transmission has been completed with the TMCp.TMTAR bit set to 0 (transmit abort is not requested).
11b: Transmission has been completed with the TMCp.TMTAR bit set to 1 (transmit abort is requested).
Write 00b to the TMTRF[1:0] flags in channel communication mode or channel halt mode. Do not write any value other than 00b to these flags.

TMTRM Flag (Transmit Buffer Transmit Request Status Flag)

The TMTRM flag becomes 1 when the TMCp.TMTR bit is set to 1, and becomes 0 when the TMCp.TMTR bit is set to 0.

TMTARM Flag (Transmit Buffer Transmit Abort Request Status Flag)

The TMTARM flag becomes 1 when the TMCp.TMTAR bit is set to 1, and becomes 0 when the TMCp.TMTAR bit is set to 0.

30.2.63 Transmit Buffer Transmit Request Status Register (TMTRSTS)

Address(es): RSCAN0.TMTRSTS 000A 8374h

	b15	b14	b13	b12	b11	b10	b9	b8	b7	b6	b5	b4	b3	b2	b1	b0
	—	—	—	—	—	—	—	—	—	—	—	—	TMTRSTS3	TMTRSTS2	TMTRSTS1	TMTRSTS0
Value after reset:	0	0	0	0	0	0	0	0	0	0	0	0	0	0	0	0

Bit	Symbol	Bit Name	Description	R/W
b0	TMTRSTS0	RSCAN0 Transmit Buffer 0 Transmit Request Status Flag	0: No transmit request is present. 1: A transmit request is present.	R
b1	TMTRSTS1	RSCAN0 Transmit Buffer 1 Transmit Request Status Flag		R
b2	TMTRSTS2	RSCAN0 Transmit Buffer 2 Transmit Request Status Flag		R
b3	TMTRSTS3	RSCAN0 Transmit Buffer 3 Transmit Request Status Flag		R
b15 to b4	—	Reserved	These bits are read as 0.	R

TMTRSTSp Flag (RSCAN0 Transmit Buffer p Transmit Request Status Flag) (p = 0 to 3)

This flag indicates the status of the TMCp.TMTR bit.

When the TMTR bit is set to 1 (transmission is requested), the corresponding TMTRSTSp flag becomes 1.

The corresponding TMTRSTSp flag becomes 0 when the TMTR bit is set to 0 (transmission is not requested) or in channel reset mode.

30.2.64 Transmit Buffer Transmit Complete Status Register (TMTCSTS)

Address(es): RSCAN0.TMTCSTS 000A 8376h

	b15	b14	b13	b12	b11	b10	b9	b8	b7	b6	b5	b4	b3	b2	b1	b0
	—	—	—	—	—	—	—	—	—	—	—	—	TMTCSTS3	TMTCSTS2	TMTCSTS1	TMTCSTS0
Value after reset:	0	0	0	0	0	0	0	0	0	0	0	0	0	0	0	0

Bit	Symbol	Bit Name	Description	R/W
b0	TMTCSTS0	RSCAN0 Transmit Buffer 0 Transmit Complete Status Flag	0: Transmission has not been completed. 1: Transmission has been completed.	R
b1	TMTCSTS1	RSCAN0 Transmit Buffer 1 Transmit Complete Status Flag		R
b2	TMTCSTS2	RSCAN0 Transmit Buffer 2 Transmit Complete Status Flag		R
b3	TMTCSTS3	RSCAN0 Transmit Buffer 3 Transmit Complete Status Flag		R
b15 to b4	—	Reserved	These bits are read as 0.	R

TMTCSTSp Flag (RSCAN0 Transmit Buffer p Transmit Complete Status Flag) (p = 0 to 3)

When the TMSTSp.TMTRF[1:0] flags become 10b (transmission has been completed (without transmit abort request)) or 11b (transmission has been completed (with transmit abort request)), the corresponding TMTCSTSp flag becomes 1. This flag becomes 0 when the corresponding TMSTSp.TMTRF[1:0] flags are set to 00b or in channel reset mode.

30.2.65 Transmit Buffer Transmit Abort Status Register (TMTASTS)

Address(es): RSCAN0.TMTASTS 000A 8378h

	b15	b14	b13	b12	b11	b10	b9	b8	b7	b6	b5	b4	b3	b2	b1	b0
	—	—	—	—	—	—	—	—	—	—	—	—	TMTASTS3	TMTASTS2	TMTASTS1	TMTASTS0
Value after reset:	0	0	0	0	0	0	0	0	0	0	0	0	0	0	0	0

Bit	Symbol	Bit Name	Description	R/W
b0	TMTASTS0	RSCAN0 Transmit Buffer 0 Transmit Abort Status Flag	0: Transmission is not aborted. 1: Transmission is aborted.	R
b1	TMTASTS1	RSCAN0 Transmit Buffer 1 Transmit Abort Status Flag		R
b2	TMTASTS2	RSCAN0 Transmit Buffer 2 Transmit Abort Status Flag		R
b3	TMTASTS3	RSCAN0 Transmit Buffer 3 Transmit Abort Status Flag		R
b15 to b4	—	Reserved	These bits are read as 0.	R

TMTASTSp Flag (RSCAN0 Transmit Buffer p Transmit Abort Status Flag) (p = 0 to 3)

When the TMSTSp.TMTRF[1:0] flags become 01b (transmit abort has been completed), the corresponding TMTASTSp flag becomes 1.

This flag becomes 0 when the corresponding TMSTSp.TMTRF[1:0] flags are set to 00b or in channel reset mode.

30.2.66 Transmit Buffer Interrupt Enable Register (TMIEC)

Address(es): RSCAN0.TMIEC 000A 837Ah

	b15	b14	b13	b12	b11	b10	b9	b8	b7	b6	b5	b4	b3	b2	b1	b0
	—	—	—	—	—	—	—	—	—	—	—	—	TMIE3	TMIE2	TMIE1	TMIE0
Value after reset:	0	0	0	0	0	0	0	0	0	0	0	0	0	0	0	0

Bit	Symbol	Bit Name	Description	R/W
b0	TMIE0	RSCAN0 Transmit Buffer 0 Interrupt Enable	0: Transmit buffer interrupt is disabled. 1: Transmit buffer interrupt is enabled.	R/W
b1	TMIE1	RSCAN0 Transmit Buffer 1 Interrupt Enable		R/W
b2	TMIE2	RSCAN0 Transmit Buffer 2 Interrupt Enable		R/W
b3	TMIE3	RSCAN0 Transmit Buffer 3 Interrupt Enable		R/W
b15 to b4	—	Reserved	These bits are read as 0. The write value should be 0.	R/W

TMIEp Bit (RSCAN0 Transmit Buffer p Interrupt Enable) (p = 0 to 3)

When TMIEp bit is set to 1 and the corresponding transmission has been completed, a transmit buffer interrupt request is generated.

Modify this bit when the corresponding TMSTSp.TMTRM flag is 0 (no transmit request is present).

Write 0 to bits corresponding to transmit buffers linked to transmit/receive FIFO buffers.

30.2.67 Transmit Buffer Register pAL (TMIDLp) (p = 0 to 3)

Address(es): RSCAN0.TMIDL0 000A 8600h, RSCAN0.TMIDL1 000A 8610h, RSCAN0.TMIDL2 000A 8620h, RSCAN0.TMIDL3 000A 8630h

	b15	b14	b13	b12	b11	b10	b9	b8	b7	b6	b5	b4	b3	b2	b1	b0
	TMID[15:0]															
Value after reset:	0	0	0	0	0	0	0	0	0	0	0	0	0	0	0	0

Bit	Symbol	Bit Name	Description	R/W
b15 to b0	TMID[15:0]	Transmit Buffer ID Data L	Set standard ID or extended ID. For standard ID, write an ID to b10 to b0 and write 0 to b15 to b11.	R/W

Modify this register when the corresponding TMSTSp.TMTRM flag is 0 (no transmit request is present). If this register is linked to any transmit/receive FIFO buffer, do not write data to this register.

This register can be read/written when the GRWCR.RPAGE bit is 1.

TMID[15:0] Bits (Transmit Buffer ID Data L)

These bits are used to set the ID of the message to be transmitted from the transmit buffer.

30.2.68 Transmit Buffer Register pAH (TMIDHp) (p = 0 to 3)

Address(es): RSCAN0.TMIDH0 000A 8602h, RSCAN0.TMIDH1 000A 8612h, RSCAN0.TMIDH2 000A 8622h, RSCAN0.TMIDH3 000A 8632h

	b15	b14	b13	b12	b11	b10	b9	b8	b7	b6	b5	b4	b3	b2	b1	b0
	TMIDE	TMRTR	THLEN	TMID[28:16]												
Value after reset:	0	0	0	0	0	0	0	0	0	0	0	0	0	0	0	0

Bit	Symbol	Bit Name	Description	R/W
b12 to b0	TMID[28:16]	Transmit Buffer ID Data H	Set standard ID or extended ID. For standard ID, write 0 to these bits.	R/W
b13	THLEN	Transmit History Data Store Enable	0: Transmit history data is not stored in the buffer. 1: Transmit history data is stored in the buffer.	R/W
b14	TMRTR	Transmit Buffer RTR	0: Data frame 1: Remote frame	R/W
b15	TMIDE	Transmit Buffer IDE	0: Standard ID 1: Extended ID	R/W

Modify this register when the corresponding TMSTSp.TMTRM flag is 0 (no transmit request is present). If this register is linked to any transmit/receive FIFO buffer, do not write data to this register.
This register can be read/written when the GRWCR.RPAGE bit is 1.

TMID[28:16] Bits (Transmit Buffer ID Data H)

These bits are used to set the ID of the message to be transmitted from the transmit buffer.

THLEN Bit (Transmit History Data Store Enable)

When this bit is set to 1, the transmit history data (label information, buffer number, and buffer type) of transmit messages is stored in the transmit history buffer after transmission is completed.

TMRTR Bit (Transmit Buffer RTR)

This bit is used to set the data format of the message to be transmitted from the transmit buffer.

TMIDE Bit (Transmit Buffer IDE)

This bit is used to set the ID format of the message to be transmitted from the transmit buffer.

30.2.69 Transmit Buffer Register pBH (TMPTRp) (p = 0 to 3)

Address(es): RSCAN0.TMPTR0 000A 8606h, RSCAN0.TMPTR1 000A 8616h, RSCAN0.TMPTR2 000A 8626h, RSCAN0.TMPTR3 000A 8636h

	b15	b14	b13	b12	b11	b10	b9	b8	b7	b6	b5	b4	b3	b2	b1	b0
	TMDLC[3:0]				—	—	—	—	TMPTR[7:0]							
Value after reset:	0	0	0	0	0	0	0	0	0	0	0	0	0	0	0	0

Bit	Symbol	Bit Name	Description	R/W
b7 to b0	TMPTR[7:0]	Transmit Buffer Label Data	Set the label information to be stored in the transmit history buffer.	R/W
b11 to b8	—	Reserved	These bits are read as 0. The write value should be 0.	R/W
b15 to b12	TMDLC[3:0]	Transmit Buffer DLC Data	b15 b12 0 0 0 0: 0 data bytes 0 0 0 1: 1 data byte 0 0 1 0: 2 data bytes 0 0 1 1: 3 data bytes 0 1 0 0: 4 data bytes 0 1 0 1: 5 data bytes 0 1 1 0: 6 data bytes 0 1 1 1: 7 data bytes 1 x x x: 8 data bytes	R/W

x: Don’t care

Modify this register when the corresponding TMSTSp.TMTRM flag is 0 (no transmit request is present). If this register is linked to any transmit/receive FIFO buffer, do not write data to this register.
This register can be read/written when the GRWCR.RPAGE bit is 1.

TMPTR[7:0] Bits (Transmit Buffer Label Data)

When message transmission has been completed, the TMPTR[7:0] value is stored in the transmit history buffer.

TMDLC[3:0] Bits (Transmit Buffer DLC Data)

These bits are used to set the data length of the message to be transmitted from the transmit buffer when the TMIDHp.TMRTR bit is set to 0 (data frame). If a 9-byte (or more) data length is set, 8 bytes of data is actually transmitted.
When the TMIDHp.TMRTR bit is set to 1 (remote frame), set the data length of messages to be requested.

30.2.70 Transmit Buffer Register pCL (TMDF0p) (p = 0 to 3)

Address(es): RSCAN0.TMDF00 000A 8608h, RSCAN0.TMDF01 000A 8618h, RSCAN0.TMDF02 000A 8628h, RSCAN0.TMDF03 000A 8638h

	b15	b14	b13	b12	b11	b10	b9	b8	b7	b6	b5	b4	b3	b2	b1	b0
	TMDB1[7:0]								TMDB0[7:0]							
Value after reset:	0	0	0	0	0	0	0	0	0	0	0	0	0	0	0	0

Bit	Symbol	Bit Name	Description	R/W
b7 to b0	TMDB0[7:0]	Transmit Buffer Data Byte 0	Set transmit buffer data.	R/W
b15 to b8	TMDB1[7:0]	Transmit Buffer Data Byte 1		R/W

Modify this register when the corresponding TMSTSp.TMTRM flag is 0 (no transmit request is present). If this register is linked to any transmit/receive FIFO buffer, do not write data to this register.
This register can be read/written when the GRWCR.RPAGE bit is 1.

30.2.71 Transmit Buffer Register pCH (TMDF1p) (p = 0 to 3)

Address(es): RSCAN0.TMDF10 000A 860Ah, RSCAN0.TMDF11 000A 861Ah, RSCAN0.TMDF12 000A 862Ah, RSCAN0.TMDF13 000A 863Ah

	b15	b14	b13	b12	b11	b10	b9	b8	b7	b6	b5	b4	b3	b2	b1	b0
	TMDB3[7:0]								TMDB2[7:0]							
Value after reset:	0	0	0	0	0	0	0	0	0	0	0	0	0	0	0	0

Bit	Symbol	Bit Name	Description	R/W
b7 to b0	TMDB2[7:0]	Transmit Buffer Data Byte 2	Set transmit buffer data.	R/W
b15 to b8	TMDB3[7:0]	Transmit Buffer Data Byte 3		R/W

Modify this register when the corresponding TMSTSp.TMTRM flag is 0 (no transmit request is present). If this register is linked to any transmit/receive FIFO buffer, do not write data to this register.
This register can be read/written when the GRWCR.RPAGE bit is 1.

30.2.72 Transmit Buffer Register pDL (TMDF2p) (p = 0 to 3)

Address(es): RSCAN0.TMDF20 000A 860Ch, RSCAN0.TMDF21 000A 861Ch, RSCAN0.TMDF22 000A 862Ch, RSCAN0.TMDF23 000A 863Ch

	b15	b14	b13	b12	b11	b10	b9	b8	b7	b6	b5	b4	b3	b2	b1	b0
	TMDB5[7:0]								TMDB4[7:0]							
Value after reset:	0	0	0	0	0	0	0	0	0	0	0	0	0	0	0	0

Bit	Symbol	Bit Name	Description	R/W
b7 to b0	TMDB4[7:0]	Transmit Buffer Data Byte 4	Set transmit buffer data.	R/W
b15 to b8	TMDB5[7:0]	Transmit Buffer Data Byte 5		R/W

Modify this register when the corresponding TMSTSp.TMTRM flag is 0 (no transmit request is present). If this register is linked to any transmit/receive FIFO buffer, do not write data to this register.
This register can be read/written when the GRWCR.RPAGE bit is 1.

30.2.73 Transmit Buffer Register pDH (TMDF3p) (p = 0 to 3)

Address(es): RSCAN0.TMDF30 000A 860Eh, RSCAN0.TMDF31 000A 861Eh, RSCAN0.TMDF32 000A 862Eh, RSCAN0.TMDF33 000A 863Eh

	b15	b14	b13	b12	b11	b10	b9	b8	b7	b6	b5	b4	b3	b2	b1	b0
	TMDB7[7:0]								TMDB6[7:0]							
Value after reset:	0	0	0	0	0	0	0	0	0	0	0	0	0	0	0	0

Bit	Symbol	Bit Name	Description	R/W
b7 to b0	TMDB6[7:0]	Transmit Buffer Data Byte 6	Set transmit buffer data.	R/W
b15 to b8	TMDB7[7:0]	Transmit Buffer Data Byte 7		R/W

Modify this register when the corresponding TMSTSp.TMTRM flag is 0 (no transmit request is present). If this register is linked to any transmit/receive FIFO buffer, do not write data to this register.
This register can be read/written when the GRWCR.RPAGE bit is 1.

30.2.74 Transmit History Buffer Control Register (THLCC0)

Address(es): RSCAN0.THLCC0 000A 837Ch

	b15	b14	b13	b12	b11	b10	b9	b8	b7	b6	b5	b4	b3	b2	b1	b0
	—	—	—	—	—	THLDTE	THLIM	THLIE	—	—	—	—	—	—	—	THLE
Value after reset:	0	0	0	0	0	0	0	0	0	0	0	0	0	0	0	0

Bit	Symbol	Bit Name	Description	R/W
b0	THLE	Transmit History Buffer Enable	0: Transmit history buffer is not used. 1: Transmit history buffer is used.	R/W
b7 to b1	—	Reserved	These bits are read as 0. The write value should be 0.	R/W
b8	THLIE	Transmit History Interrupt Enable	0: Transmit history interrupt is disabled. 1: Transmit history interrupt is enabled.	R/W
b9	THLIM	Transmit History Interrupt Source Select	0: When 6 sets of data have been stored in the transmit history buffer 1: When a single set of transmit history data has been stored	R/W
b10	THLDTE	Transmit History Target Buffer Select	0: Entry from transmit/receive FIFO buffers 1: Entry from transmit buffers, transmit/receive FIFO buffers	R/W
b15 to b11	—	Reserved	These bits are read as 0. The write value should be 0.	R/W

THLE Bit (Transmit History Buffer Enable)

Setting this bit to 1 makes the transmit history buffer available. When data transmission from the buffer selected by the THLDTE bit has been completed, the transmit history data of transmit messages is stored in the transmit history buffer. Modify this bit only in channel communication mode or channel halt mode.

THLIE Bit (Transmit History Interrupt Enable)

When the THLIE bit is set to 1 and the source selected by the THLIM bit has occurred, a transmit history interrupt request is generated. Modify the THLIE bit with the THLE bit set to 0.

THLIM Bit (Transmit History Interrupt Source Select)

This bit is used to select a transmit history interrupt source.
Modify this bit only in channel reset mode.

THLDTE Bit (Transmit History Target Buffer Select)

When this bit is set to 0, the transmit history data of messages transmitted from transmit/receive FIFO buffers is stored in the transmit history buffer. When this bit is set to 1, the transmit history data of messages transmitted from transmit buffers and transmit/receive FIFO buffers is stored in the transmit history buffer.
Modify this bit only in channel reset mode.

30.2.75 Transmit History Buffer Status Register (THLSTS0)

Address(es): RSCAN0.THLSTS0 000A 8380h

	b15	b14	b13	b12	b11	b10	b9	b8	b7	b6	b5	b4	b3	b2	b1	b0
	—	—	—	—	THLMC[3:0]				—	—	—	—	THLIF	THLELT	THLFLL	THLEMP
Value after reset:	0	0	0	0	0	0	0	0	0	0	0	0	0	0	0	1

Bit	Symbol	Bit Name	Description	R/W
b0	THLEMP	Transmit History Buffer Empty Status Flag	0: Transmit history buffer contains unread data. 1: Transmit history buffer contains no unread data (buffer empty).	R
b1	THLFLL	Transmit History Buffer Full Status Flag	0: Transmit history buffer is not full. 1: Transmit history buffer is full.	R
b2	THLELT	Transmit History Buffer Overflow Flag	0: Transmit history buffer overflow has not occurred. 1: Transmit history buffer overflow has occurred.	R/(W) *1
b3	THLIF	Transmit History Interrupt Request Flag	0: No transmit history interrupt request is present. 1: A transmit history interrupt request is present.	R/(W) *1
b7 to b4	—	Reserved	These bits are read as 0. The write value should be 0.	R/W
b11 to b8	THLMC[3:0]	Transmit History Buffer Unread Data Counter	These bits indicate the number of unread data sets stored in the transmit history buffer.	R
b15 to b12	—	Reserved	These bits are read as 0. The write value should be 0.	R/W

Note 1. Only 0 can be written to this bit, to clear the flag. Writing 1 does not affect the flag value.

THLEMP Flag (Transmit History Buffer Empty Status Flag)

The THLEMP flag becomes 0 when even a single set of transmit history data has been stored in the transmit history buffer.

This flag becomes 1 when all the data in the transmit history buffer has been read. This flag also becomes 1 in channel reset mode or when the THLCC0.THLE bit is set to 0 (transmit history buffer is not used).

THLFLL Flag (Transmit History Buffer Full Status Flag)

The THLFLL flag becomes 1 when 8 data sets have been stored in the transmit history buffer, and becomes 0 when the number of data sets stored in the transmit history buffer has decreased to less than 8.

This flag also becomes 0 in channel reset mode or when the THLCC0.THLE bit is set to 0 (transmit history buffer is not used).

THLELT Flag (Transmit History Buffer Overflow Flag)

The THLELT flag becomes 1 when it is attempted to store new transmit history data while the transmit history buffer is full. In this case, the new data is discarded.

This flag becomes 0 in channel reset mode or by writing 0 to this flag by the program.

THLIF Flag (Transmit History Interrupt Request Flag)

The THLIF flag becomes 1 when the interrupt source set by the THLCC0.THLIM bit has occurred.

This flag becomes 0 in channel reset mode or by writing 0 to this flag by the program.

THLMC[3:0] Flags (Transmit History Buffer Unread Data Counter)

These flags indicate the number of unread data sets stored in the transmit history buffer.

30.2.76 Transmit History Buffer Access Register (THLACC0)

Address(es): RSCAN0.THLACC0 000A 8680h

	b15	b14	b13	b12	b11	b10	b9	b8	b7	b6	b5	b4	b3	b2	b1	b0
	TID[7:0]								—	—	—	BN[1:0]		—	BT[1:0]	
Value after reset:	0	0	0	0	0	0	0	0	0	0	0	0	0	0	0	0

Bit	Symbol	Bit Name	Description	R/W
b1, b0	BT[1:0]	Buffer Type Data	b1 b0 0 1: Transmit buffer 1 0: Transmit FIFO buffer	R
b2	—	Reserved	This bit is read as 0.	R
b4, b3	BN[1:0]	Buffer Number Data	The buffer number of transmit source (transmit buffer or transmit/receive FIFO) can be read.	R
b7 to b5	—	Reserved	These bits are read as 0.	R
b15 to b8	TID[7:0]	Label Data	The label information of stored data can be read.	R

This register can be read when the GRWCR.RPAGE bit is 1.

BT[1:0] Bits (Buffer Type Data)

These bits indicate the transmit source buffer type of transmit history data stored in the transmit history buffer.

BN[1:0] Bits (Buffer Number Data)

These bits indicate the transmit source buffer number of transmit history data stored in the transmit history buffer.

TID[7:0] Bits (Label Data)

These bits indicate the label information of transmit history data stored in the transmit history buffer.

30.2.77 Transmit History Buffer Pointer Control Register (THLPCTR0)

Address(es): RSCAN0.THLPCTR0 000A 8384h

	b15	b14	b13	b12	b11	b10	b9	b8	b7	b6	b5	b4	b3	b2	b1	b0
	—	—	—	—	—	—	—	—	THLPC[7:0]							
Value after reset:	0	0	0	0	0	0	0	0	0	0	0	0	0	0	0	0

Bit	Symbol	Bit Name	Description	R/W
b7 to b0	THLPC[7:0]	Transmit History Buffer Pointer	Writing FFh to these bits moves the read pointer to the next unread data in the transmit history buffer.	W
b15 to b8	—	Reserved	The write value should be 0.	W

THLPC[7:0] Bits (Transmit History Buffer Pointer)

When the THLPC [7:0] bits are set to FFh, the read pointer moves to the next data in the transmit history buffer. At this time, the THLSTS0.THLMC[3:0] (transmit history buffer unread data counter) value is decremented. After reading the THLACC0 register, write FFh to the THLPC [7:0] bits.

Write FFh to the THLPC[7:0] bits when the THLCC0.THLE bit is set to 1 (transmit history buffer is used) and the THLSTS0.THLEMP flag is 0.

30.2.78 Global RAM Window Control Register (GRWCR)

Address(es): RSCAN.GRWCR 000A 838Ah

	b15	b14	b13	b12	b11	b10	b9	b8	b7	b6	b5	b4	b3	b2	b1	b0
	—	—	—	—	—	—	—	—	—	—	—	—	—	—	—	RPAGE
Value after reset:	0	0	0	0	0	0	0	0	0	0	0	0	0	0	0	0

Bit	Symbol	Bit Name	Description	R/W
b0	RPAGE	RAM Window Select	0: Selects window 0 (receive rule entry registers, RAM test registers) 1: Selects window 1 (receive buffer, receive FIFO buffer, transmit/receive FIFO buffer, transmit buffer, transmit history data access register)	R/W
b15 to b1	—	Reserved	The write value should be 0.	R/W

RPAGE Bit (RAM Window Select)

This bit is used to select a window for the switching of registers that are allocated to addresses from 000A 83A0h to 000A 8681h.

[Registers allocated when the RPAGE bit is set to 0 (window 0 selected)]

- Receive rule entry registers: GAFLIDLj, GAFLIDHj, GAFLMLj, GAFLMHj, GAFLPLj, GAFLPHj (j = 0 to 15)
- RAM test registers: RPGACCr (r = 0 to 127)

[Registers allocated when the RPAGE bit is set to 1 (window 1 selected)]

- Receive buffer registers: RMIDLn, RMIDHn, RMTSn, RMPTRn, RMDF0n to RMDF3n (n = 0 to 15)
- Receive FIFO access registers: RFIDLm, RFIDHm, RFTSm, RFPTRm, RFDF0m to RFDF3m (m = 0, 1)
- Transmit/receive FIFO access registers: CFIDL0, CFIDH0, CFTS0, CFPTR0, CFDF00 to CFDF30
- Transmit buffer registers: TMIDLp, TMIDHp, TMPTRp, TMDF0p to TMDF3p (p = 0 to 3)
- Transmit history buffer access register: THLACC0

30.2.79 Global Test Configuration Register (GTSTCFG)

Address(es): RSCAN.GTSTCFG 000A 838Ch

	b15	b14	b13	b12	b11	b10	b9	b8	b7	b6	b5	b4	b3	b2	b1	b0
	—	—	—	—	—	RTMPS[2:0]			—	—	—	—	—	—	—	—
Value after reset:	0	0	0	0	0	0	0	0	0	0	0	0	0	0	0	0

Bit	Symbol	Bit Name	Description	R/W
b7 to b0	—	Reserved	These bits are read as 0. The write value should be 0.	R/W
b10 to b8	RTMPS[2:0]	RAM Test Page Configuration	Set a value within a range of page 0 (00h) to page 2 (02h).	R/W
b15 to b11	—	Reserved	These bits are read as 0. The write value should be 0.	R/W

Modify the GTSTCFG register only in global test mode.

RTMPS[2:0] Bits (RAM Test Page Configuration)

These bits are used to set the RAM test target page number for RAM test. Set a value from 00h to 02h.

30.2.80 Global Test Control Register (GTSTCTRL)

Address(es): RSCAN.GTSTCTRL 000A 838Eh

	b7	b6	b5	b4	b3	b2	b1	b0
	—	—	—	—	—	RTME	—	—
Value after reset:	0	0	0	0	0	0	0	0

Bit	Symbol	Bit Name	Description	R/W
b1, b0	—	Reserved	These bits are read as 0. The write value should be 0.	R/W
b2	RTME	RAM Test Enable	0: RAM test is disabled. 1: RAM test is enabled.	R/W
b7 to b3	—	Reserved	These bits are read as 0. The write value should be 0.	R/W

RTME Bit (RAM Test Enable)

Setting this bit to 1 enables RAM test. Modify this bit only in global test mode.

(1) Set the GCTRL.GMDC[1:0] bits to 10b (global test mode).
(2) Unlock protection by successively writing 7575h and 8A8Ah to the GLOCKK register
(3) Set the RTME bit to 1.
(4) Check that the RTME bit is set to 1.

30.2.81 Global Test Protection Unlock Register (GLOCKK)

Address(es): RSCAN.GLOCKK 000A 8394h

	b15	b14	b13	b12	b11	b10	b9	b8	b7	b6	b5	b4	b3	b2	b1	b0
	LOCK[15:0]															
Value after reset:	0	0	0	0	0	0	0	0	0	0	0	0	0	0	0	0

Bit	Symbol	Bit Name	Description	R/W
b15 to b0	LOCK[15:0]	Protection Unlock Data	Write protection unlock data to use test functions. These bits are read as 0000h.	W

Modify the GLOCKK register only in global test mode.

LOCK[15:0] Bits (Protection Unlock Data)

Write the protection unlock data shown in Table 30.3 to the LOCK[15:0] bits in succession to allow writing 1 to the target bit.

Table 30.3 Protection Unlock Data for Test Functions

Test Function	Protection Unlock Data 1	Protection Unlock Data 2	Target Bit
RAM test	7575h	8A8Ah	GTSTCTRL.RTME bit

Writing data to the CAN's register area (000A 8300h to 000A 839Fh) except the RAM area after protection is unlocked enables protection again.
Protection is not enabled even by reading data from the CAN's register area or reading/writing data from/to other areas.

30.2.82 RAM Test Register r (RPGACCr) (r = 0 to 127)

Address(es): RSCAN.RPGACC0 to RSCAN.RPGACC127 000A 8580h to 000A 867Eh

	b15	b14	b13	b12	b11	b10	b9	b8	b7	b6	b5	b4	b3	b2	b1	b0
	RDTA[15:0]															
Value after reset:	0	0	0	0	0	0	0	0	0	0	0	0	0	0	0	0

Description	R/W
Data can be read and written in CAN RAM.	R/W

Modify the RPGACCr register in global test mode with the GTSTCTRL.RTME bit set to 1 (RAM test is enabled). The RPGACCr register is readable and writable when the GTSTCTRL.RTME bit is set to 1.
This register can be read/written when the GRWCR.RPAGE bit is 0.

30.3 CAN Modes

The CAN module has four global modes to control entire CAN module status and four channel modes to control individual channel status.

Details of global modes are described in section 30.3.1, Global Modes, and details of channel modes are described in section 30.3.2, Channel Modes.

- Global stop mode: Stops clocks of entire module to achieve low power consumption.
- Global reset mode: Performs initial settings for entire module.
- Global test mode: Performs test settings and performs RAM test.
- Global operating mode: Makes entire module operable.
- Channel stop mode: Stops channel clock.
- Channel reset mode: Performs initial settings for channels.
- Channel halt mode: Stops CAN communication and enables channel test.
- Channel communication mode: Performs CAN communication.

30.3.1 Global Modes

Figure 30.2 shows the transitions of global modes.

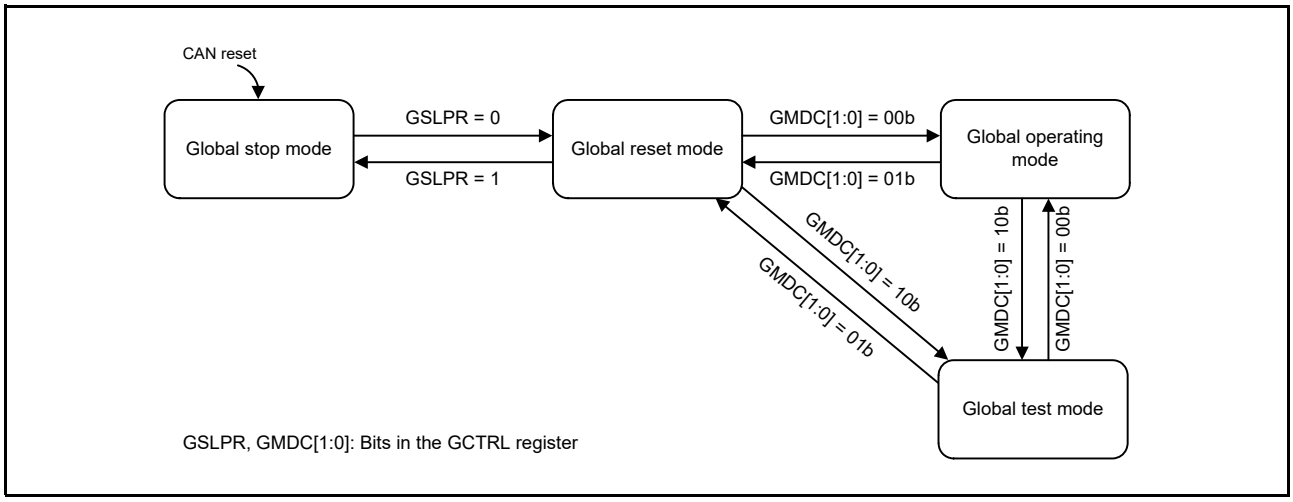

Figure 30.2 Transitions of Global Modes

Channel modes transition in some cases with transitions of global modes. Table 30.4 shows the transitions of channel modes depending on the global mode setting by the GCTRL.GMDC[1:0] bits and the GSLPR bit.

Table 30.4 Transitions of Channel Modes Depending on Global Mode Setting (GCTRL.GMDC[1:0] and GSLPR Bits)

	Channel Mode after Setting			
Channel Mode before Setting	**GMDC[1:0] = 00b GSLPR = 0 (Global Operation)**	**GMDC[1:0] = 10b GSLPR = 0 (Global Test)**	**GMDC[1:0] = 01b GSLPR = 0 (Global Reset)**	**GMDC[1:0] = 01b GSLPR = 1 (Global Stop)**
Channel communication	Channel communication	Channel communication	Channel reset	Transition prohibited
Channel halt	Channel halt	Channel halt	Channel reset	Transition prohibited
Channel reset	Channel reset	Channel reset	Channel reset	Channel stop
Channel stop	Channel stop	Channel stop	Channel stop	Channel stop

Table 30.5 shows the global mode transition time.

Table 30.5 Global Mode Transition Time

Mode before Transition	Mode after Transition	Maximum Transition Time
Global stop	Global reset	3 PCLK cycles
Global reset	Global stop	3 PCLK cycles
Global reset	Global test	10 PCLK cycles
Global reset	Global operating	10 PCLK cycles
Global test	Global reset	3 PCLK cycles
Global test	Global operating	3 PCLK cycles
Global operating	Global reset	3 PCLK cycles
Global operating	Global test	Two CAN frames

(1) Global Stop Mode

In global stop mode, clocks of the CAN do not run and therefore power consumption is reduced. CAN registers can be read, but writing data to them is prohibited. Register values are retained.
After the operation of the CAN module is enabled, the CAN module transitions to global stop mode. Setting the GCTRL.GSLPR bit to 1 (global stop mode) in global reset mode sets the CTRL.CSLPR bit to 1 (channel stop mode). If all channels are forcibly caused to transition to channel stop mode, the CAN module transitions to global stop mode. The GCTRL.GSLPR bit should not be modified in global operating mode and global test mode.

(2) Global Reset Mode

In global reset mode, CAN module settings are performed. When the CAN module transitions to global reset mode, some registers are initialized. Table 30.8 and Table 30.9 list the registers to be initialized.
Setting the GCTRL.GMDC[1:0] bits to 01b sets each of the CTRL.CHMDC[1:0] bits to 01b (channel reset mode). If all channels are forcibly caused to transition to channel reset mode, the CAN module transitions to global reset mode. Channels that are already in channel reset mode or channel stop mode do not transition (because the CTRL.CHMDC[1:0] bits have already been set to 01b).

(3) Global Test Mode

In global test mode, settings for test-related registers are performed. When the CAN module transitions to global test mode, all CAN communications are disabled.
Setting the GCTRL.GMDC[1:0] bits to 10b sets each of the CTRL.CHMDC[1:0] bits to 10b (channel halt mode). If all channels are forcibly caused to transition to channel halt mode, the CAN module transitions to global test mode. Channels that are in channel stop mode, channel reset mode, or channel halt mode do not transition.

(4) Global Operating Mode

In global operating mode, entire CAN module operates.
When the GCTRL.GMDC[1:0] bits are set to 00b, the CAN module transitions to global operating mode.

30.3.2 Channel Modes

Figure 30.3 shows a channel mode state transition chart. Table 30.6 shows the channel mode transition time.

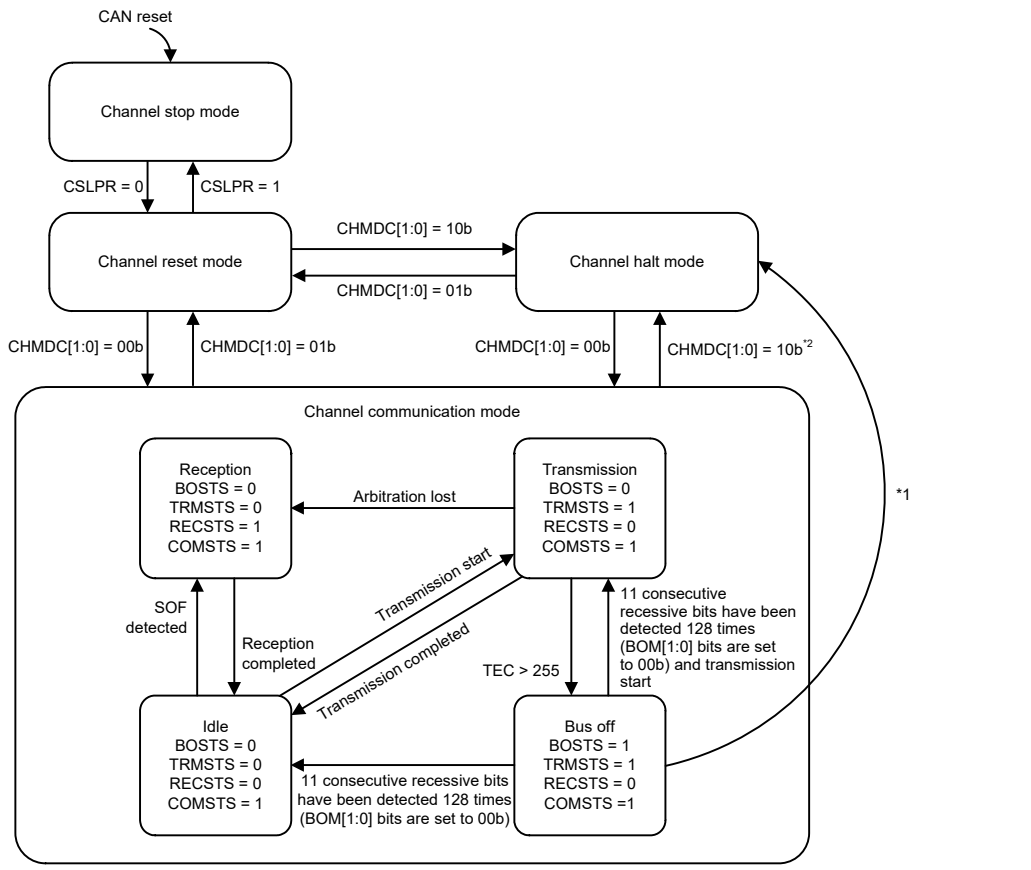

CHMDC[1:0], CSLPR: Bits in the CTRL register
BOM[1:0]: Bits in the CTRH register
BOSTS, TRMSTS, RECSTS, COMSTS: Bits in the STSL register

Note 1. Timing of transition from bus off state to channel halt mode
- When BOM[1:0] = 01b: Transition to channel halt mode when TEC exceeds 255
- When BOM[1:0] = 10b: Transition to channel halt mode when 11 consecutive recessive bits have been detected 128 times
- When BOM[1:0] = 11b: Transition to channel halt mode when the CHMDC[1:0] bits are set to 10b

Note 2. While the CAN bus is locked at the dominant level, transition to channel halt mode is not made. In that case, enter channel reset mode.

Figure 30.3 Channel Mode State Transition Chart

Table 30.6 Channel Mode Transition Time

Mode before Transition	Mode after Transition	Maximum Transition Time
Channel stop	Channel reset	3 PCLK cycles
Channel reset	Channel stop	3 PCLK cycles
Channel reset	Channel halt	3 CAN bit times
Channel reset	Channel communication	2 CAN bit times
Channel halt	Channel reset	3 PCLK cycles
Channel halt	Channel communication	3 CAN bit times
Channel communication	Channel reset	3 PCLK cycles
Channel communication	Channel halt	2 CAN frames

(1) Channel Stop Mode

In channel stop mode, clocks are not supplied to channels and therefore power consumption is reduced. CAN registers can be read, but writing data to them is prohibited. Register values are retained.
Each channel enters channel stop mode after the operation of the CAN module is enabled. The channel transitions to channel stop mode when the CTRL.CSLPR bit is set to 1 (channel stop mode) in channel reset mode.
The CSLPR bit should not be modified in channel communication mode and channel halt mode.

(2) Channel Reset Mode

In channel reset mode, channel settings are performed. When a channel transitions to channel reset mode, some channel-related registers are initialized. Table 30.8 lists the registers to be initialized.
When the CTRL.CHMDC[1:0] bits are set to 01b (channel reset mode) during CAN communication, communication is terminated before it is completed and the channel transitions to channel reset mode. Table 30.7 shows the operation when the CTRL.CHMDC[1:0] bits are set to 01b (channel reset mode) during CAN communication.

(3) Channel Halt Mode

In channel halt mode, settings for test-related registers of channels are performed. When a channel transitions to channel halt mode, CAN communication of the channel stops.
Table 30.7 shows operation when the CTRL.CHMDC[1:0] bits are set to 10b (channel halt mode) during CAN communication.

Table 30.7 Operation when a Channel Transitions to Channel Reset Mode/Channel Halt Mode

Mode	During Reception	During Transmission	Bus Off State
Channel reset (CHMDC[1:0] = 01b)	Transitions to channel reset mode before reception is completed.*1	Transitions to channel reset mode before transmission is completed.*1	Transitions to channel reset mode before bus off recovery.
Channel halt*3 (CHMDC[1:0] = 10b)	Transitions to channel halt mode after reception is completed.*2	Transitions to channel halt mode after transmission is completed.*2	[When BOM[1:0] = 00b] Transitions to channel halt mode (CHMDC[1:0] = 10b) only after bus off recovery. [When BOM[1:0] = 01b] Transitions to channel halt mode automatically when the condition for transition to bus off state is met. [When BOM[1:0] = 10b] Transitions to channel halt mode automatically after bus off recovery. [When BOM[1:0] = 11b] Transitions to channel halt mode immediately after the CHMDC[1:0] bits are set to 10b before bus off recovery.

Note 1. To allow transition to channel reset mode after communication is completed, set the CHMDC[1:0] bits to 10b and confirm that communication has been completed and transition to channel halt mode has been made, and then set the CHMDC[1:0] bits to 01b.
Note 2. While the CAN bus is locked at the dominant level, transition to channel halt mode is not made. In that case, enter channel reset mode. The CAN bus status can be confirmed with the ERFLL.BLF flag that becomes 1 when dominant lock is detected.
Note 3. In case of a transition from channel reset mode to channel halt mode, transition to channel halt mode after setting the CFGL and CFGH registers in channel reset mode.

(4) Channel Communication Mode

In channel communication mode, CAN communication is performed. Each channel has the following communication states during CAN communication.

- Idle: Neither reception nor transmission is in progress.
- Reception: Receiving a message sent from another node.
- Transmission: Transmitting a message.

- Bus off: Isolated from CAN communication.

When the CTRL.CHMDC[1:0] bits are set to 00b, the channel transitions to channel communication mode. After that, when 11 consecutive recessive bits have been detected, the STSL.COMSTS flag becomes 1 (communication is ready) and transmission and reception are enabled on the CAN network as an active node. At this time, transmission and reception of messages can be started.

(5) Bus Off State

A channel transitions to the bus off state according to the transmit/receive error counter increment/decrement rules of the ISO 11898-1 standard.

How to return from the bus off state is set by the CTRH.BOM[1:0] bits.

- When CTRH.BOM[1:0] = 00b:
  Bus off recovery is compliant with the ISO 11898-1 standard. After 11 consecutive recessive bits have been detected 128 times, a channel returns from the bus off state to the CAN communication ready state (error active state).
  At that time, the STSH.TEC[7:0] and STSH.REC[7:0] flags are initialized to 00h and the ERFLL.BORF flag becomes 1 (bus off recovery is detected). When the CTRL.CHMDC[1:0] bits are set to 10b (channel halt mode) in the bus off state, the channel transitions to channel halt mode after bus off recovery has been completed (11 consecutive recessive bits have been detected 128 times).
- When CTRH.BOM[1:0] = 01b:
  When a channel transitions to the bus off state, the CTRL.CHMDC[1:0] bits are set to 10b and the channel transitions to channel halt mode. At that time, the STSH.TEC[7:0] and STSH.REC[7:0] flags are initialized to 00h but the ERFLL.BORF flag is not set to 1.
- When CTRH.BOM[1:0] = 10b:
  When a channel has transitioned to the bus off state, the CTRL.CHMDC[1:0] bits are set to 10b. After bus off recovery has been completed (11 consecutive recessive bits have been detected 128 times), the channel transitions to channel halt mode. At that time, the STSH.TEC[7:0] and STSH.REC[7:0] flags are initialized to 00h and the ERFLL.BORF flag becomes 1.
- When CTRH.BOM[1:0] = 11b:
  When the CHMDC[1:0] bits are set to 10b in the bus off state, the channel transitions to channel halt mode before bus off recovery is completed. At that time, the STSH.TEC[7:0] and STSH.REC[7:0] flags are initialized to 00h but the ERFLL.BORF flag is not set to 1.
  However, the BORF flag becomes 1 if a CAN module transitions to error active state (by detecting 128 times of 11 consecutive recessive bits) before the CTRL.CHMDC[1:0] bits are set to 10b.

If the channel transitions to channel halt mode simultaneously when the program writes a value to the CTRL.CHMDC[1:0] bits, writing by the program takes precedence. An automatic transition to channel halt mode when the CTRH.BOM[1:0] bits are set to 01b or 10b is made only when the CTRL.CHMDC[1:0] bits are 00b (channel communication mode).

Furthermore, setting the CTRL.RTBO bit to 1 allows forcible return from the bus off state. As soon as the CTRL.RTBO bit is set to 1, the state changes to the error active state. After 11 consecutive recessive bits have been detected, the condition of CAN module becomes ready for communication. In this case, the ERFLL.BORF flag is not set to 1 and the STSH.TEC[7:0] and STSH.REC[7:0] flags are initialized to 00h. Write 1 to the CTRL.RTBO bit when the CTRH.BOM[1:0] value is 00b.

Table 30.8 Registers Initialized in Global Reset Mode or Channel Reset Mode

Register	Bit/Flag
CTRL	CHMDC[1:0]
CTRH	CTMS[1:0], CTME
STSL	CHLTSTS, EPSTS, BOSTS, TRMSTS, RECSTS, COMSTS
STSH	REC[7:0], TEC[7:0]
ERFLL	ADERR, B0ERR, B1ERR, CERR, AERR, FERR, SERR, ALF, BLF, OVLF, BORF, BOEF, EPF, EWF, BEF
ERFLH	CRCREG[14:0]
CFCCL0	When transmit/receive FIFO buffer is in transmit mode: CFE
CFSTS0	When transmit/receive FIFO buffer is in transmit mode: CFMC[5:0], CFTXIF, CFRXIF, CFMLT, CFFLL, CFEMP
TMCp	TMOM, TMTAR, TMTR
TMSTSp	TMTARM, TMTRM, TMTRF[1:0], TMTSTS
TMTRSTS	TMTRSTSp
TMTCSTS	TMTCSTSp
TMTASTS	TMTASTSp
THLCC0	THLE
THLSTS0	THLMC[3:0], THLIF, THLELT, THLFLL, THLEMP
GTINTSTS	THIF0, CFTIF0, TAIF0, TSIF0

Table 30.9 Registers Initialized Only in Global Reset Mode

Register	Bit/Flag
GSTS	GHLTSTS
GERFLL	THLES, MES, DEF
GTSC	TS[15:0]
RMND0	RMNSn
RFCCm	RFE
RFSTSm	RFMC[5:0], RFIF, RFMLT, RFFLL, RFEMP
CFCCL0	When transmit/receive FIFO buffer is in receive mode: CFE
CFSTS0	When transmit/receive FIFO buffer is in receive mode: CFMC[5:0], CFTXIF, CFRXIF, CFMLT, CFFLL, CFEMP
RFMSTS	RFmMLT
CFMSTS	CF0MLT
RFISTS	RFmIF
CFISTS	CF0IF
GTSTCFG	RTMPS[2:0]
GTSTCTRL	RTME

30.4 Reception Function

There are two reception types.

- Reception by receive buffers:
  Zero to 16 receive buffers can be shared by all channels. Since messages stored in receive buffers are overwritten at each reception, the latest receive data can always be read.
- Reception by receive FIFO buffers and transmit/receive FIFO buffers (receive mode):
  Two receive FIFO buffers can be shared by all channels and one dedicated transmit/receive FIFO buffer is provided for each channel. The FIFO buffers can hold the number of received messages set by the RFCCm.RFDC[2:0] bits and CFCCL0.CFDC[2:0] bits, and messages can be read sequentially from the oldest.

30.4.1 Data Processing Using the Receive Rule Table

Data processing using the receive rule table allows selected messages to be stored in the specified buffer. Data processing includes acceptance filter processing, DLC filter processing, routing processing, label addition processing, and mirror function processing.
Up to 16 receive rules can be registered per channel. If receive rules are not set, no message can be received. Figure 30.4 illustrates how receive rules are registered.

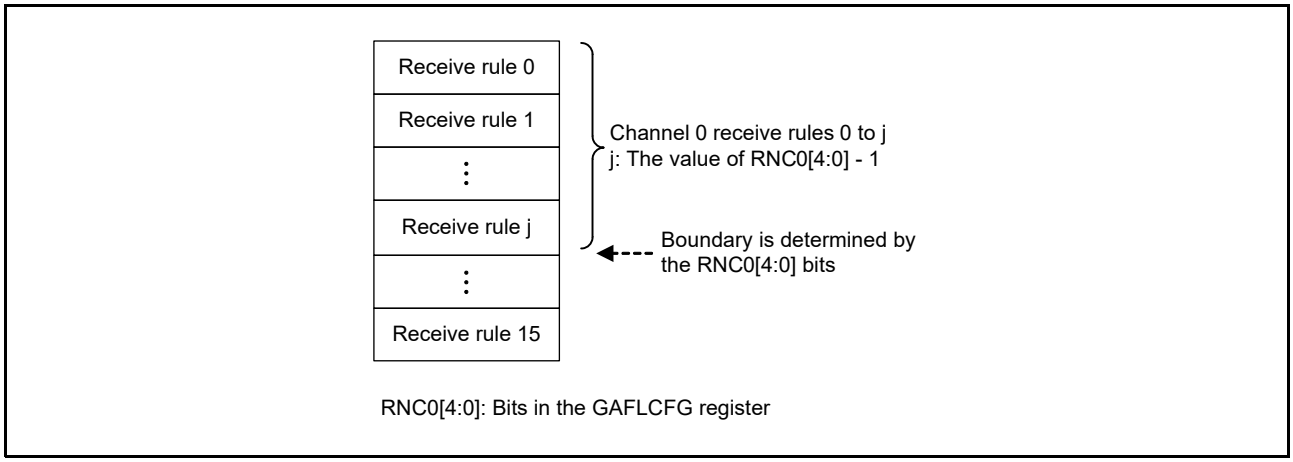

Figure 30.4 Entry of Receive Rules

Each receive rule consists of 12 bytes in the GAFLIDLj, GAFLIDHj, GAFLMLj, GAFLMHj, GAFLPLj, and GAFLPHj registers. The GAFLIDLj and GAFLIDHj registers are used to set ID, IDE bit, RTR bit, and the mirror function, the GAFLMLj and GAFLMHj registers are used to set mask, the GAFLPLj and GAFLPHj registers are used to set label information to be added, DLC value, and storage receive buffer, and storage FIFO buffer.

(1) Acceptance Filter Processing

In the acceptance filter processing, the ID data, IDE bit, and RTR bit in a received message are compared with the ID data, IDE bit, and RTR bit set in the receive rule of the corresponding channel. When all these bits match, the message passes through the acceptance filter processing. The ID data, IDE bit, and RTR bit in a received message which correspond to bits that are set to 0 (bits are not compared) in the GAFLMLj and GAFLMHj registers are not compared and are regarded as matched.
Check begins with the receive rule with the smallest rule number of the corresponding channel. When all the bits to be compared in a received message match the bits set in the receive rule or when all the receive rules are compared without any match, filter processing stops. If there is no matching receive rule, the received message is not stored in the receive buffer or FIFO buffer.

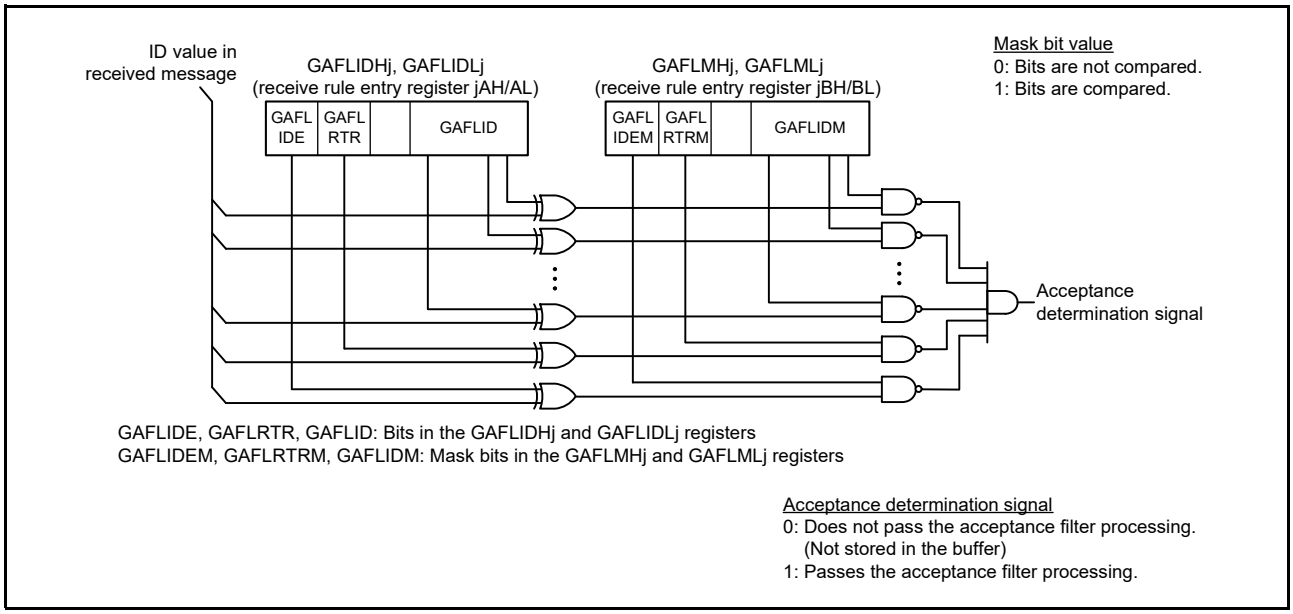

Figure 30.5 Acceptance Filter Function

(2) DLC Filter Processing

When the GCFGL.DCE bit is set to 1 (DLC check is enabled), DLC filter processing is added to messages that passed through the acceptance filter processing. When the DLC value in a message is equal to or larger than the DLC value set in the receive rule, the message passes through the DLC filter processing.

When a message has passed through the DLC filter processing with the GCFGL.DRE bit set to 0 (DLC replacement is disabled), the DLC value in the received message is stored in the buffer. In this case, all the data bytes in the received message are stored in the buffer.

When a message has passed through the DLC filter processing with the GCFGL.DRE bit set to 1 (DLC replacement is enabled), the DLC value in the receive rule is stored in the buffer instead of the DLC value in the received message. In this case, a value of 00h is written to data bytes that are larger than the DLC value in the receive rule.

When the DLC value in the received message is smaller than that in the receive rule, the message does not pass through the DLC filter processing. In this case, the message is not stored in the receive buffer or the FIFO buffer and the GERFLL.DEF flag becomes 1 (a DLC error is present).

(3) Routing Processing

Messages that passed through the acceptance filter processing and the DLC filter processing are stored in receive buffers, receive FIFO buffers, or transmit/receive FIFO buffers (set to receive mode). Message storage destination is set by the GAFLPLj.GAFLRMV, GAFLRMDP[6:0], GAFLFDP4, GAFLFDP1, and GAFLFDP0 bits. Messages that passed through the acceptance filter processing and the DLC filter processing can be stored in up to two buffers.

(4) Label Addition Processing

It is possible to add 12-bit label information to messages that passed through the filter processing and store them in buffers. This label information is set in the GAFLPHj.GAFLPTR[11:0] bits.

(5) Mirror Function Processing

The mirror function allows reception of messages transmitted from the own CAN node. The mirror function is made available by setting the GCFGL.MME bit to 1 (mirror function is enabled).

When the mirror function is in use, receive rules for which the GAFLIDHj.GAFLLB bit is set to 0 are used for data processing when receiving messages transmitted from other CAN nodes. When receiving messages transmitted from the own CAN node, receive rules for which the GAFLIDHj.GAFLLB bit is set to 1 are used for data processing.

30.4.2 Timestamp

The timestamp counter is a 16-bit free-running counter used for recording message receive time. The timestamp counter value is fetched at the start-of-frame (SOF) timing of a message and is then stored in a receive buffer or a FIFO buffer together with the message ID and data. PCLK or the CAN bit time clock is selectable as a timestamp counter clock source from the GCFGL.TSSS bit. The clock obtained by dividing the selected clock source by the GCFGL.TSP[3:0] value is used as the timestamp counter count source.

When the CAN bit time clock is used as a clock source, the timestamp counter stops when the corresponding channel transitions to channel reset mode or channel halt mode. When PCLK is used as a clock source, the timestamp function is not affected by channel mode.

The timestamp counter value is reset to 0000h by setting the GCTRH.TSRST bit to 1.

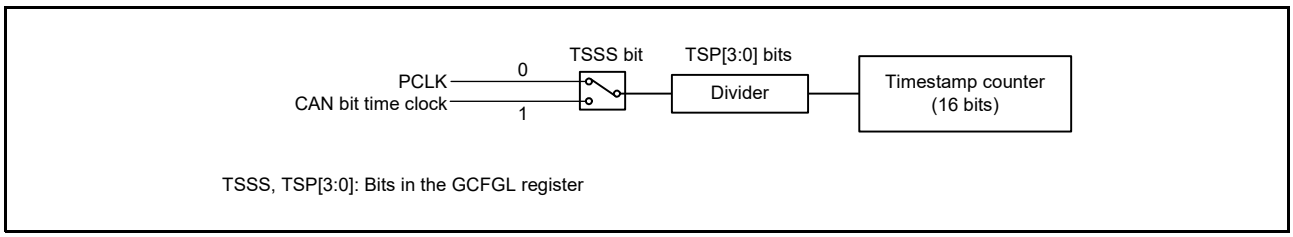

Figure 30.6 Timestamp Function Block Diagram

30.5 Transmission Functions

There are two types of transmission.

- Transmission using transmit buffers:
  Each channel has 4 buffers.
- Transmission using transmit/receive FIFO buffers (transmit mode):
  Each channel has one FIFO buffer. Up to 16 messages can be contained in a single FIFO buffer. Each FIFO buffer is used with a link to a transmit buffer. Only the message to be transmitted next in a FIFO buffer becomes the target of transmit priority determination. Messages are transmitted sequentially on a first-in, first-out basis.

Figure 30.7 shows the allocation of transmit/receive FIFO buffer link.

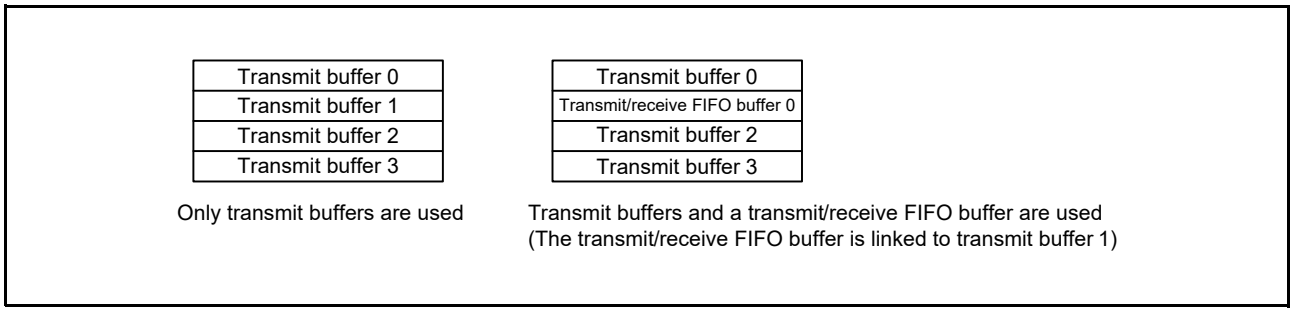

Figure 30.7 Allocation of Transmit/Receive FIFO Buffer Links

30.5.1 Transmit Priority Determination

If transmit requests are issued from multiple buffers in the same channel, transmit priority is determined.
The priority is determined by using one of the following methods.

- ID priority (GCFGL.TPRI bit = 0)
- Transmit buffer number priority (GCFGL.TPRI bit = 1)

The setting of the GCFGL.TPRI bit is enabled in all CAN channels.
When the GCFGL.TPRI bit is set to 0, messages are transmitted according to the priority of stored message IDs. Priority of IDs conforms to the CAN bus arbitration specification defined in the ISO 11898-1 standard. IDs of messages stored in transmit buffers and transmit/receive FIFO buffers (set to transmit mode) are targets of priority determination. When transmit/receive FIFO buffers are used, the oldest message in a FIFO buffer becomes the target of priority determination. When a message is being transmitted from a transmit/receive FIFO buffer, the next message in the FIFO buffer becomes the target of priority determination. When the GCFGL.TPRI bit is set to 1, the message in the transmit buffer of the minimum number among buffers with a transmit request is transmitted first. When transmit/receive FIFO buffers are linked to transmit buffers, transmit priority is determined according to linked transmit buffer numbers.
When messages are retransmitted due to an arbitration lost or an error, transmit priority determination is made again regardless of the GCFGL.TPRI bit setting.

30.5.2 Transmission Using Transmit Buffers

Setting the transmit request bit (TMCp.TMTR bit) in a transmit buffer to 1 (transmission is requested) allows transmission of data frames or remote frames.
Transmit result is shown by the corresponding TMSTSp.TMTRF[1:0] flags. When transmit completes successfully, the TMSTSp.TMTRF[1:0] flags become 10b (transmission has been completed (without transmit abort request)) or 11b (transmission has been completed (with transmit abort request)).

(1) Transmit Abort Function

With respect to transmit buffers for which the TMSTSp.TMTRM flag is 1 (a transmit request is present), when the TMCp.TMTAR bit is set to 1 (transmit abort is requested), the transmit request is canceled. When transmit abort is completed, the TMSTSp.TMTRF[1:0] flags become 01b (transmit abort has been completed) and the transmit request is canceled (the TMSTSp.TMTRM flag becomes 0).
A message that is being transmitted or a message to be transmitted next according to the transmit priority determination cannot be aborted. However, when an arbitration lost or an error has occurred while a message for which the TMCp.TMTAR bit is set to 1 is being transmitted, retransmission is not performed.

(2) One-Shot Transmission Function (Retransmission Disabling Function)

When the TMCp.TMOM bit is set to 1 (one-shot transmission is enabled), transmission is performed only once. Even if an arbitration lost or an error occurs, retransmission is not performed.
One-shot transmit result is shown by the corresponding TMSTSp.TMTRF[1:0] flags. When one-shot transmit completes successfully, the TMSTSp.TMTRF[1:0] flags become 10b or 11b. When an arbitration lost or an error has occurred, the TMSTSp.TMTRF[1:0] flags become 01b (transmit abort has been completed).

30.5.3 Transmission Using FIFO Buffers

Messages of a volume of the FIFO buffer depth set by the CFCCL0.CFDC[2:0] bits can be stored in a single transmit/receive FIFO buffer. Messages are transmitted sequentially on a first-in, first-out basis.
Transmit/receive FIFO buffers are linked to transmit buffers selected by the CFCCH0.CFTML[1:0] bits.
When the CFCCL0.CFE bit is set to 1 (transmit/receive FIFO buffers are used), transmit/receive FIFO buffers become targets of transmit priority determination. Priority determination is made for only the message to be transmitted next in a FIFO buffer.
When the CFCCL0.CFE bit is set to 0 (no transmit/receive FIFO buffer is used), the CFSTS0.CFEMP flag becomes 1 (the transmit/receive FIFO buffer contains no message (buffer empty)) at the timing below.

- The transmit/receive FIFO buffer becomes empty immediately when the message in it is not being transmitted or is not to be transmitted next.
- The transmit/receive FIFO buffer becomes empty after transmission completion, CAN bus error detection, or arbitration lost when the message in it is being transmitted or to be transmitted next.

When the CFCCL0.CFE bit is set to 0, all messages in transmit/receive FIFO buffers are lost and messages cannot be stored in FIFO buffers. Confirm that the CFSTS0.CFEMP flag becomes 1 before setting the CFCCL0.CFE bit to 1 again.

(1) Interval Transmission Function

To transmit messages from the same FIFO buffer while a transmit/receive FIFO buffer that is set to transmit mode is in use, message transmission interval time can be set.
Immediately after the first message has been transmitted successfully from the FIFO buffer with the CFCCL0.CFE bit set to 1, the interval timer starts counting (after EOF7 of the CAN protocol). After that, when the interval time has passed, the next message is transmitted. The interval timer stops in channel reset mode or by setting the CFCCL0.CFE bit to 0.
The interval time is set by the CFCCH0.CFITT[7:0] bits. When the interval timer is not used, set the

CFCCH0.CFITT[7:0] bits to 00h.
Select an interval timer count source by the CFCCH0.CFITR and CFITSS bits. When the CFCCH0.CFITR and CFITSS bits are set to 00b, the clock obtained by frequency-dividing PCLK by the GCFGH.ITRCP[15:0] value is used as a count source. When the CFCCH0.CFITR and CFITSS bits are set to 10b, the clock obtained by frequency-dividing PCLK by the GCFGH.ITRCP[15:0] value × 10 is used as a count source. When the CFCCH0.CFITR and CFITSS bits are set to x1b, the CAN bit time clock is used as a count source.
The interval time is calculated by the following equations where M is the set GCFGH.ITRCP[15:0] value and N is the set CFCCH0.CFITT[7:0] value.

- When CFCCH0.CFITR and CFITSS = 00b

$$\frac{1}{PCLK} \times M \times N$$

- When CFCCH0.CFITR and CFITSS = 10b

$$\frac{1}{PCLK} \times M \times 10 \times N$$

- When CFCCH0.CFITR and CFITSS = x1b
  (fCANBIT is CAN bit time clock frequency)

$$\frac{1}{fCANBIT} \times N$$

Figure 30.8 shows the interval timer block diagram.

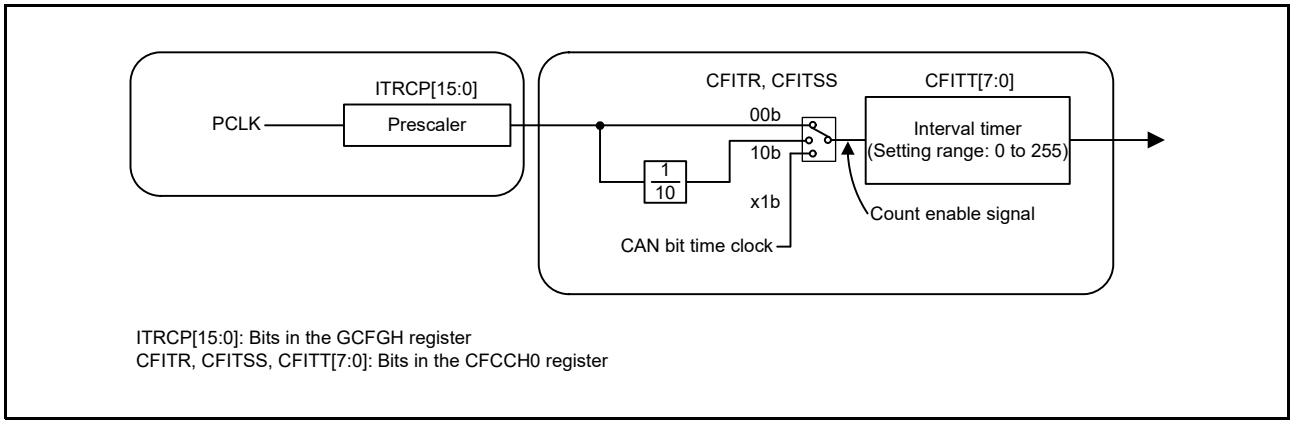

Figure 30.8 Interval Timer Block Diagram

Figure 30.9 shows the interval timer timing chart.

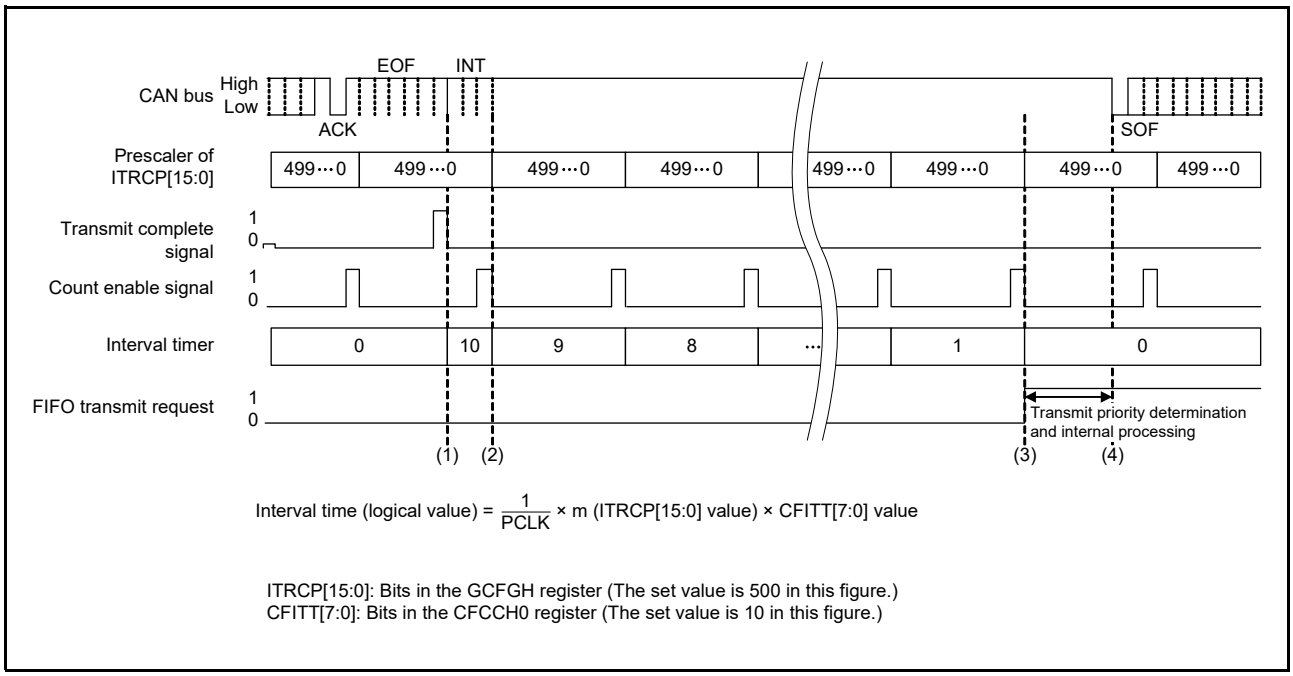

Figure 30.9 Interval Timer Timing Chart

(1) The interval timer starts counting upon completion of transmission. Since the prescaler is not initialized at the time of transmission completion, the first interval time contains an error of up to one count of the interval timer.

(2) The interval timer is decremented by the next count enable signal.

(3) When the interval timer has decreased to 0, the transmit/receive FIFO buffer issues a transmit request.

(4) The transmit/receive FIFO buffer is determined for the next transmission by the priority determination, it starts transmitting data. Transmission starts with a delay of three CAN bit time clock cycles or less from the issue of transmit request.

30.5.4 Transmit History Function

Information of transmitted messages can be stored in the transmit history buffer. Each channel has a single transmit history buffer that can contain 8 sets of transmit history data.
A message transmit source buffer type can be selected by the THLCC0.THLDTE bit. Whether to store transmit history data for each message can be set by the CFIDH0.THLEN bit.
After transmit completes successfully, information of the following transmit messages is stored in the transmit history buffer as transmit history data. After successful completion of transmit, process may be delayed by up to 38 clocks of PCLK before the transmit history data is stored.

- Buffer type 01b: Transmit buffer
  10b: Transmit/receive FIFO buffer
- Buffer number Number of source transmit buffer or transmit/receive FIFO buffer.
  This number depends on buffer types. See Table 30.10.
- Label data Label information of transmit message

Table 30.10 Transmit History Data Buffer Numbers

Buffer Number	Buffer Type	
	01b	10b
00b	Transmit buffer 0	Numbers of transmit buffers linked to transmit/receive FIFO buffers by the CFCCH0.CFTML[1:0] bits.
01b	Transmit buffer 1	
10b	Transmit buffer 2	
11b	Transmit buffer 3	

Label data is used to identify each message. A unique label data can be added to each message transmitted from a transmit buffer or transmit/receive FIFO buffer.
Transmit history data can be read from the THLACC0 register. If it is attempted to store new transmit history data while the buffer is full, the buffer overflows and the new data is discarded.

30.6 Test Function

The test function is classified into communication tests and global tests.
Communication tests: Performed for each channel.

- Standard test mode
- Listen-only mode
- Self-test mode 0 (external loopback mode)
- Self-test mode 1 (internal loopback mode)
  Global tests: Performed in entire module
- RAM test (read/write test)

30.6.1 Standard Test Mode

Standard test mode allows CRC test.

30.6.2 Listen-Only Mode

Listen-only mode allows reception of data frames and remote frames. Only recessive bits are transmitted on the CAN bus, and the ACK bit, overload flag, and active error flag are not transmitted. Listen-only mode is available for detecting the communication speed.
Do not make a transmit request from any buffer in listen-only mode.
Figure 30.10 shows the connection when listen-only mode is selected.

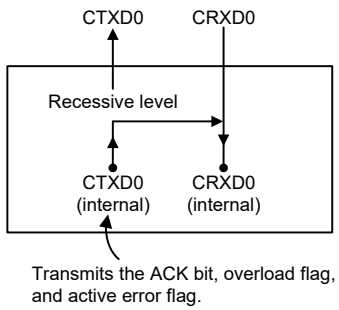

Figure 30.10 Connection When Listen-Only Mode is Selected

30.6.3 Self-Test Mode (Loopback Mode)

In self-test mode, transmitted messages are compared with the receive rule of the own channel and the messages are stored in a buffer if they have passed through the filter processing. Messages transmitted from other CAN nodes are compared only with the receive rule for which the GAFLIDHj.GAFLLB bit is set to 0 (when a message transmitted from another CAN node is received).
If the mirror function and self-test mode are both enabled, the self-test mode setting takes precedence.

(1) Self-Test Mode 0 (External Loopback Mode)

Self-test mode 0 is used to perform a loopback test within a channel including the CAN transceiver.
In self-test mode 0, transmitted messages are handled as messages received through the CAN transceiver and are stored in a buffer. An ACK bit is generated to receive messages transmitted from the own CAN node.
Figure 30.11 shows the connection when self-test mode 0 is selected.

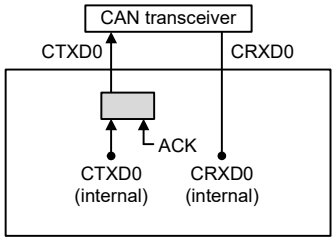

Figure 30.11 Connection When Self-Test Mode 0 is Selected

(2) Self-Test Mode 1 (Internal Loopback Mode)

In self-test mode 1, transmitted messages are handled as received messages and are stored in a buffer. An ACK bit is generated to receive messages transmitted from the own CAN node.
In self-test mode 1, internal feedback from the internal CTXD0 pin to the internal CRXD0 pin is performed. The external CRXD0 pin input is isolated. The external CTXD0 pin outputs only recessive bits.
Figure 30.12 shows the connection when self-test mode 1 is selected.

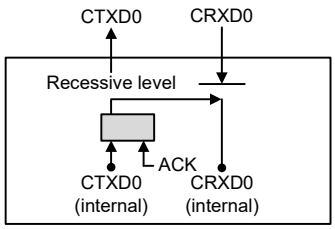

Figure 30.12 Connection When Self-Test Mode 1 is Selected

30.6.4 RAM Test

The RAM test function allows accesses to all CAN RAM addresses.
When the RAM test function is used, the RAM is divided into pages of 256 bytes each. RAM test page is set by the GTSTCFG.RTMPS[2:0] bits. Data in the set page can be read from and written to the RPGACCr register. The available total RAM size is 544 bytes (0220h).

30.7 Interrupt

The CAN module has 5 interrupts that are grouped into global interrupts and channel interrupts.

Global interrupts (2 interrupts):

- Global receive FIFO interrupt (RXFINT)
- Global error interrupt (GLERRINT)

Channel interrupts (3 interrupts per channel):

- Channel transmit interrupt (TXINT)
  - Transmit complete interrupt
  - Transmit abort interrupt
  - Transmit/receive FIFO transmit complete interrupt (transmit mode)
  - Transmit history interrupt
- Transmit/receive FIFO receive interrupt (COMFRXINT)
- Channel error interrupt (CHERRINT)

When an interrupt request is generated, the corresponding CAN module interrupt request flag becomes 1 (interrupt request present). In that case, when the interrupt enable bit is set to 1 (enabling interrupts), an interrupt request is output from the CAN module. (Generation of interrupts also is controlled by the interrupt function.)
Setting the interrupt request flag to 0 (no interrupt request present) or setting the interrupt enable bit to 0 (disabling interrupts) clears the current interrupt request. The next interrupt request is not generated until the interrupt request is cleared.

For details on the setting of the interrupt functions, refer to section 14, Interrupt Controller (ICUb).
In the following pages, Table 30.11 lists the CAN interrupt sources, Figure 30.13 shows the CAN global interrupt block diagram, and Figure 30.14 shows the CAN channel interrupt block diagram.

Table 30.11 List of CAN Interrupt Sources

Item	Interrupt Source		Corresponding Interrupt Request Flag*1	Corresponding Interrupt Enable Bit *1
Global interrupts	Global receive FIFO	Receive FIFO 0	RFSTS0.RFIF	RFCC0.RFIE
		Receive FIFO 1	RFSTS1.RFIF	RFCC1.RFIE
	Global error		GERFLL.DEF	GCTRL.DEIE
			GERFLL.MES	GCTRL.MEIE
			GERFLL.THLES	GCTRL.THLEIE
Channel interrupts	Channel transmit	Transmit complete	TMSTSp.TMTRF[1:0]	TMIEC.TMIEp
		Transmit abort	TMSTSp.TMTRF[1:0]	CTRH.TAIE
		Transmit/receive FIFO transmit	CFSTS0.CFTXIF	CFCCL0.CFTXIE
		Transmit history	THLSTS0.THLIF	THLCC0.THLIE
	Transmit/receive FIFO receive		CFSTS0.CFRXIF	CFCCL0.CFRXIE
	Channel error		ERFLL.BEF	CTRL.BEIE
			ERFLL.ALF	CTRL.ALIE
			ERFLL.BLF	CTRL.BLIE
			ERFLL.OVLF	CTRL.OLIE
			ERFLL.BORF	CTRL.BORIE
			ERFLL.BOEF	CTRL.BOEIE
			ERFLL.EPF	CTRL.EPIE
			ERFLL.EWF	CTRL.EWIE
	Wakeup		None	None

Note 1. For details on the interrupt request flags and interrupt enable bits, refer to section 15, Interrupt Controller (ICUb).

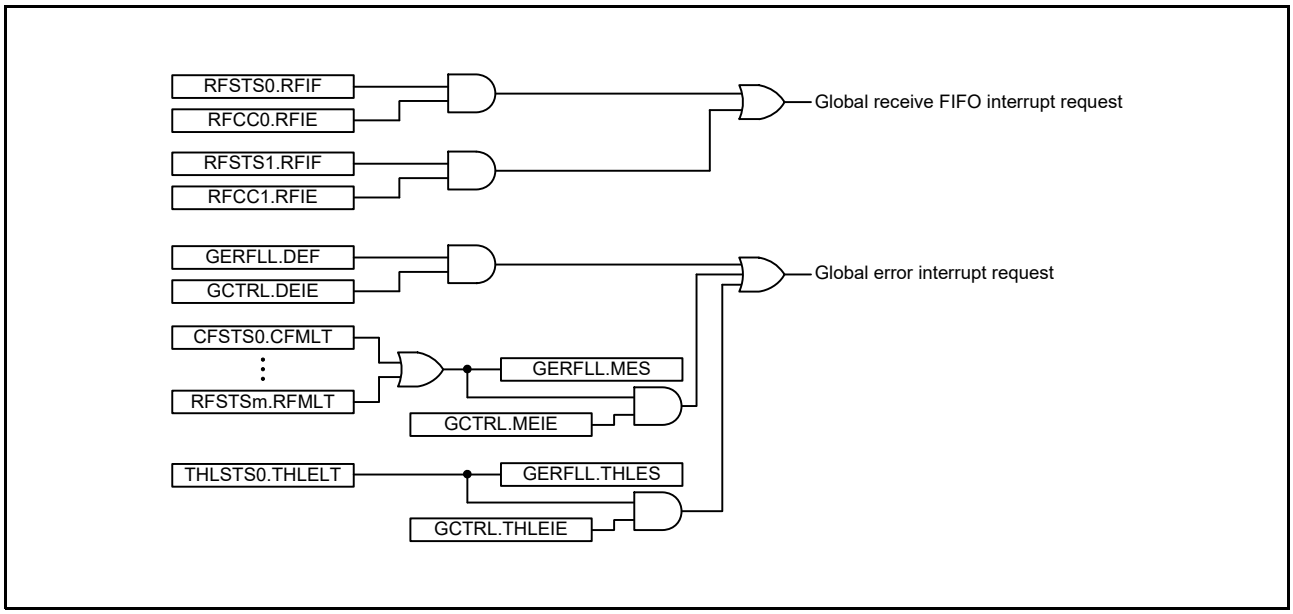

Figure 30.13 CAN Global Interrupt Block Diagram

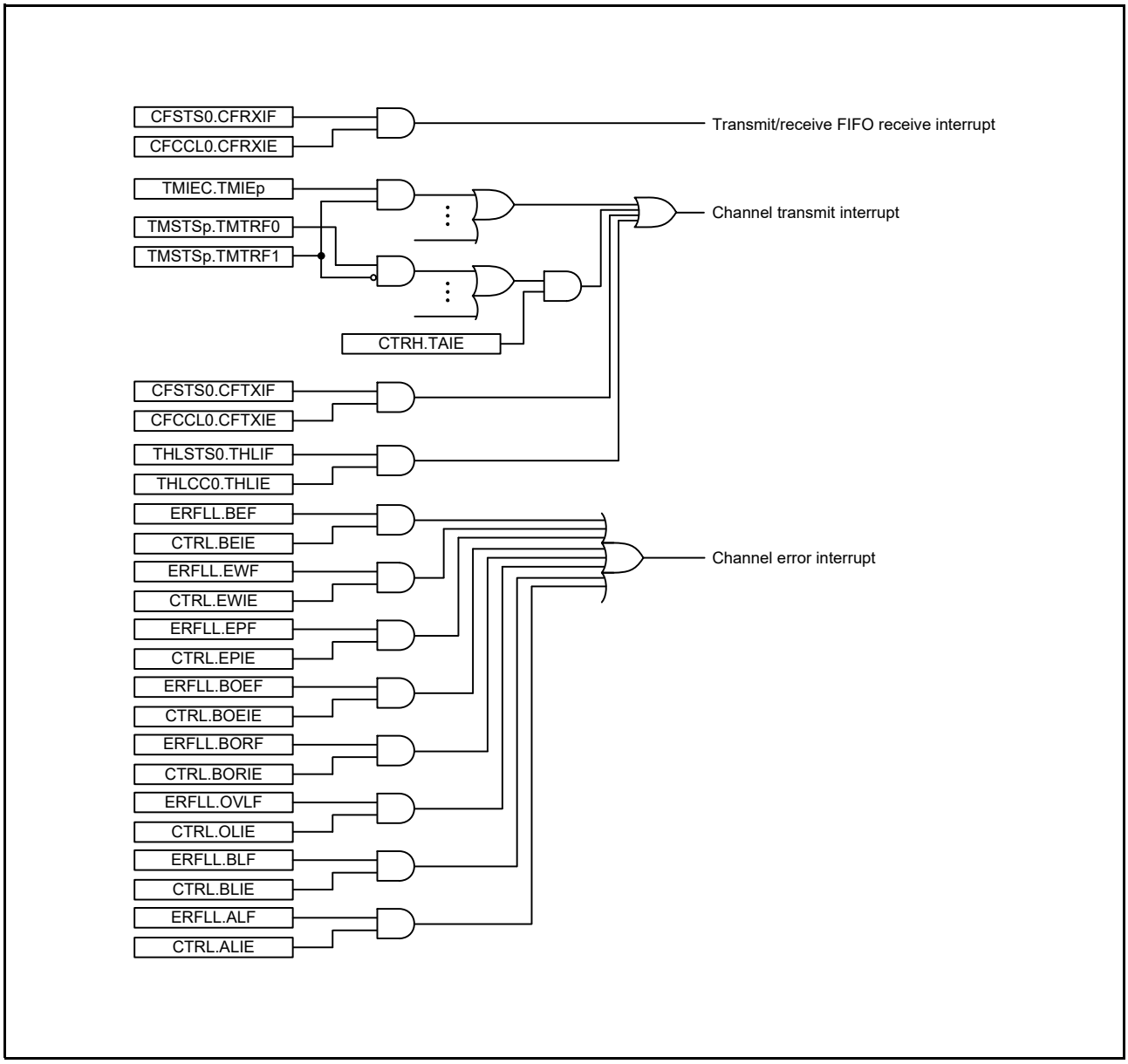

Figure 30.14 CAN Channel Interrupt Block Diagram

30.8 RAM Window

The CAN area from 000A 83A0h to 000A 8681h consists of two windows. The GRWCR.RPAGE bit is used to switch the allocation of registers.

- Registers allocated when the GRWCR.RPAGE bit is set to 0 (window 0 selected)
  Receive rule entry registers: GAFLIDLj, GAFLIDHj, GAFLMLj, GAFLMHj, GAFLPLj, GAFLPHj
  RAM test registers: RPGACCr

- Registers allocated when the GRWCR.RPAGE bit is set to 1 (window 1 selected)
  Receive buffer registers: RMIDLn, RMIDHn, RMTSn, RMPTRn, RMDF0n to RMDF3n
  Receive FIFO access registers: RFIDLm, RFIDHm, RFTSm, RFPTRm, RFDF0m to RFDF3m
  Transmit/receive FIFO access registers: CFIDL0, CFIDH0, CFTS0, CFPTR0, CFDF00 to CFDF30
  Transmit buffer registers: TMIDLp, TMIDHp, TMPTRp, TMDF0p to TMDF3p
  Transmit history buffer access register: THLACC0

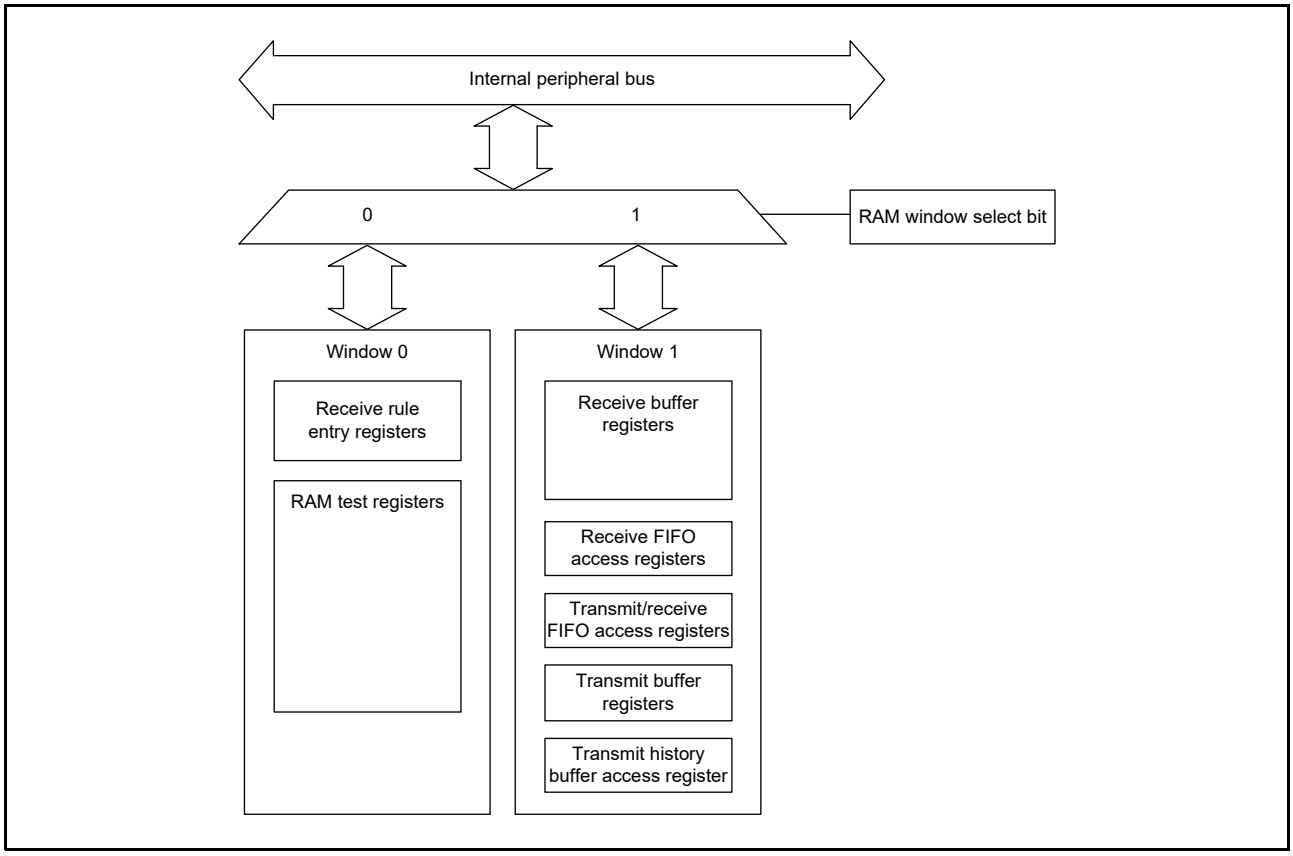

Figure 30.15 RAM Window

30.9 Initial Settings

The CAN module initializes the CAN RAM after the operation of the CAN module is enabled. The RAM initialization time is 276 cycles of PCLK. The GSTS.GRAMINIT flag becomes 1 (CAN RAM initialization is ongoing) during the RAM initialization and becomes 0 (CAN RAM initialization is finished) when the initialization is completed. Make CAN settings after the GSTS.GRAMINIT flag becomes 0.

Figure 30.16 shows the CAN setting procedure after the operation of the CAN module is enabled.

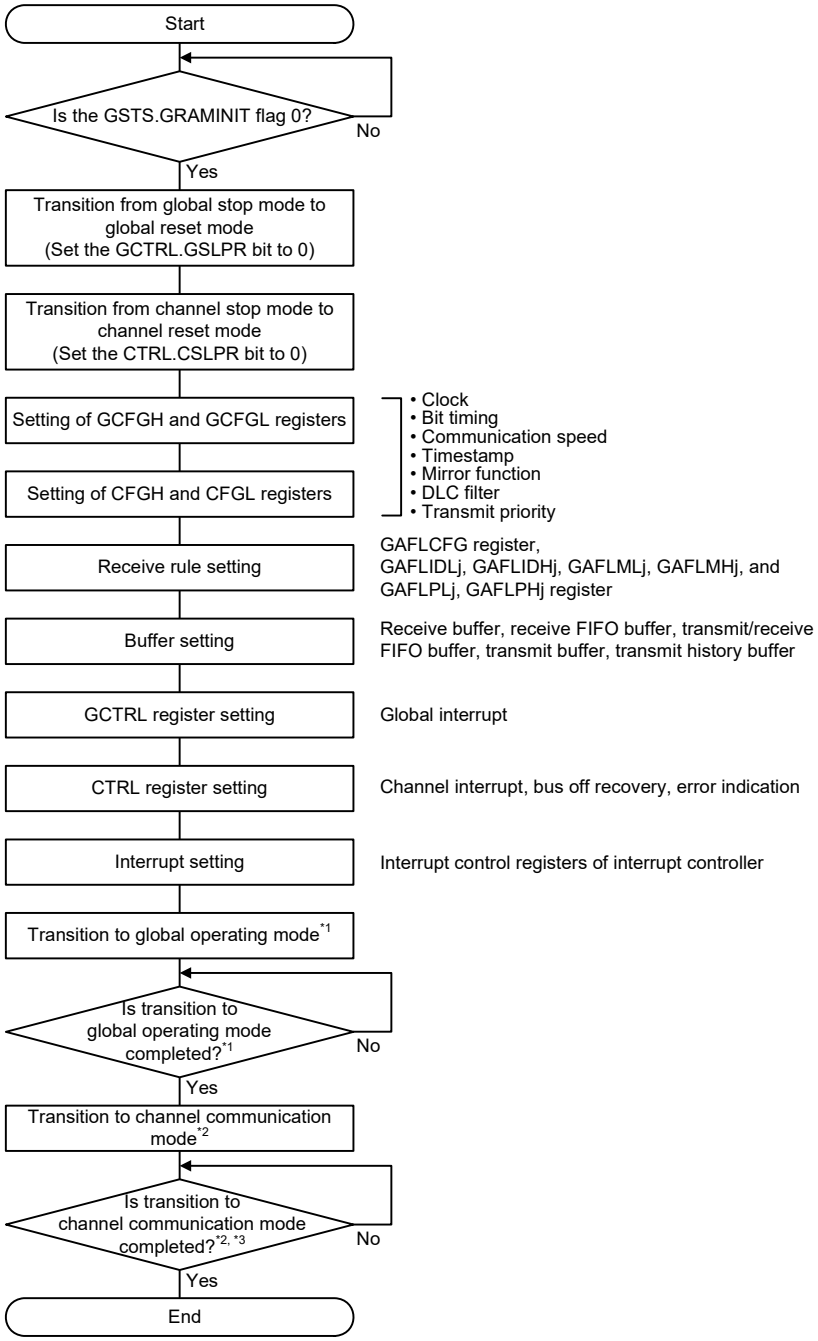

Note 1. When global mode is changed by the GCTRL.GSLPR and GMDC[1:0] bits, use the GSTS register to confirm that the mode is switched. Do not modify the GCTRL.GMDC[1:0] bits until the mode is switched.

Note 2. When channel mode is changed by the CTRL.CSLPR and CHMDC[1:0] bits, use the STSL register to confirm that the mode is switched. Do not modify the CTRL.CHMDC[1:0] bits until the mode is switched.

Note 3. After the channel transitions to channel communication mode, when 11 consecutive recessive bits have been detected, communication is ready (the STSL.COMSTS flag becomes 1) and transmission and reception are enabled on the CAN network as an active node. At this time, transmission and reception of messages can be started.

Figure 30.16 CAN Setting Procedure after the Operation of the CAN Module is Enabled

30.9.1 Clock Setting

Set the CAN clock source (fCAN) as a clock source of the CAN module. Select PCLK or CANMCLK with the GCFGL.DCS bit.

30.9.2 Bit Timing Setting

In the CAN protocol, one bit of a communication frame consists of three segments, SS, TSEG1, and TSEG2. Two of the segments, TSEG1 and TSEG2, can be set by the CFGH register for each channel. Sample point timing can be determined by setting two segments. This timing can be adjusted in units of 1 Time Quantum (referred to as Tq hereinafter). 1 Tq equals to one CAN Tq clock cycle. The CAN Tq clock is obtained by selecting the clock source with the GCFGL.DCS bit and selecting the clock division ratio with the CFGL.BRP[9:0] bits.
Figure 30.17 shows the bit timing chart. Table 30.12 shows an example of bit timing setting.

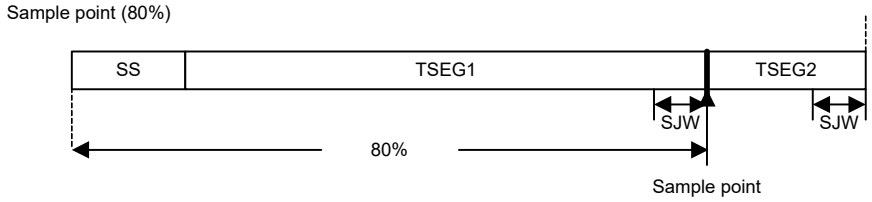

SS = 1 Tq fixed
Set TSEG1 to a range of 4 Tq to 16 Tq.
Set TSEG2 to a range of 2 Tq to 8 Tq.
Set SJW to a range of 1 Tq to 4 Tq.
Set SS + TSEG1 + TSEG2 to a range of 8 Tq to 25 Tq.
TSEG1 > TSEG2 ≥ SJW

- SS (synchronization segment):
  The SS is a segment that performs synchronization by monitoring the edge from recessive to dominant bits in the Interframe Space.
  Interframe Space consists of Intermission, Suspend Transmission, and Bus Idle. All nodes can start transmission during Bus Idle.
- TSEG1 (time segment 1):
  TSEG1 is a segment that absorbs physical delay on the CAN network. The physical delay on the CAN network is twice of the total of the delay on the CAN bus, the delay in the input comparator, and the delay in the output driver.
- TSEG2 (time segment 2):
  TSEG2 is a segment that compensates phase error due to an error in frequency.
- SJW (resynchronization jump width)
  The SJW is a length to extend or reduce time segment to compensate an error in phase due to phase error.

Figure 30.17 Bit Timing Chart

Table 30.12 Example of Bit Timing Setting

1 Bit	Set Value (Tq)				Sample Point (%) Note: See Figure 30.17
	SS	TSEG1	TSEG2	SJW	
8 Tq	1	4	3	1	62.50
	1	5	2	1	75.00
10 Tq	1	6	3	1	70.00
	1	7	2	1	80.00
16 Tq	1	10	5	1	68.75
	1	11	4	1	75.00
20 Tq	1	13	6	1	70.00
	1	15	4	3	80.00
24 Tq	1	15	8	1	66.67
	1	16	7	1	70.83

30.9.3 Communication Speed Setting

Set the CAN communication speed for each channel using the fCAN, baud rate prescaler division value (CFGL.BRP[9:0] bits), and Tq count per bit time.

Figure 30.18 shows the CAN clock control block diagram, and Table 30.13 shows an example of the communication speed setting.

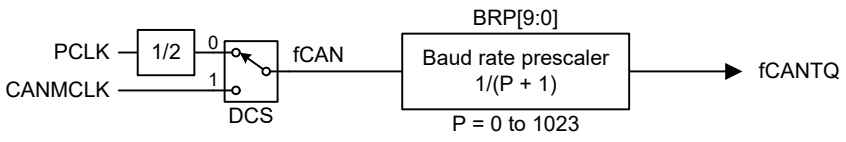

$$\text{Communication speed} = \frac{\text{fCAN}}{\text{Baud rate prescaler division value} \times (\text{Tq count of 1 bit time})}$$

DCS: Bit in the GCFGL register
BRP[9:0]: Bits in the CFGL register
fCAN: CAN clock
fCANTQ: CANTq clock

Figure 30.18 CAN Clock Control Block Diagram

Table 30.13 Example of Communication Speed Setting

	fCAN	
Communication Speed	**16 MHz**	**8 MHz**
1 Mbps	8 Tq (2) 16 Tq (1)	8 Tq (1)
500 kbps	8 Tq (4) 16 Tq (2)	8 Tq (2) 16 Tq (1)
250 kbps	8 Tq (8) 16 Tq (4)	8 Tq (4) 16 Tq (2)
83.3 kbps	8 Tq (24) 16 Tq (12)	8 Tq (12) 16 Tq (6)
33.3 kbps	8 Tq (60) 10 Tq (48) 16 Tq (30) 20 Tq (24)	8 Tq (30) 10 Tq (24) 16 Tq (15) 20 Tq (12)

Note: Values in ( ) are baud rate prescaler division values.

30.9.4 Receive Rule Setting

Receive rules can be set using receive rule-related registers.
Up to 16 receive rules can be registered.
Figure 30.19 shows the receive rule setting procedure.

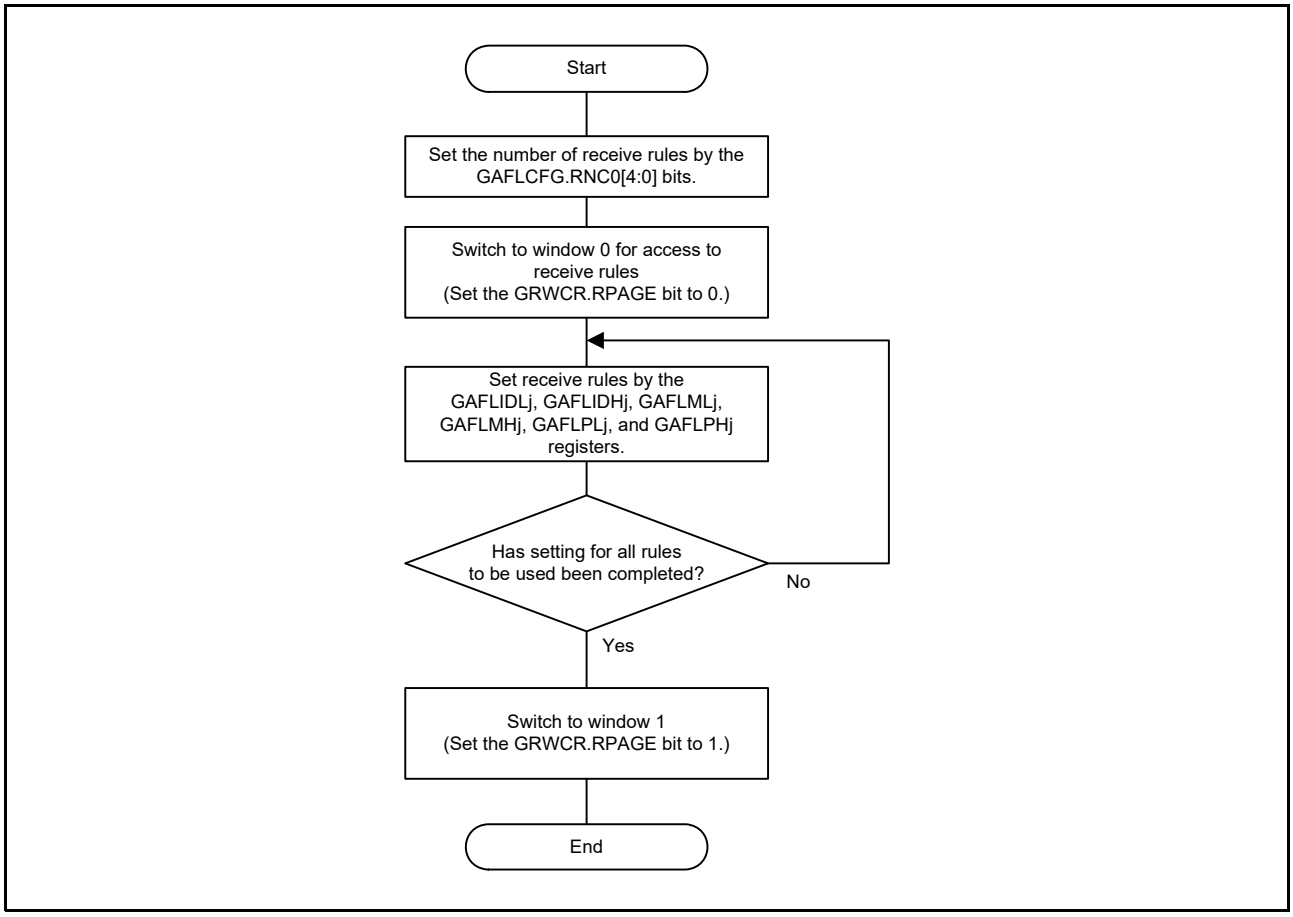

Figure 30.19 Receive Rule Setting Procedure

30.9.5 Buffer Setting

Set sizes and interrupt sources of buffers. For transmit/receive FIFO buffers that are set to transmit mode, set transmit buffers to be linked.

Figure 30.20 shows the buffer configuration. Figure 30.21 shows the buffer setting procedure.

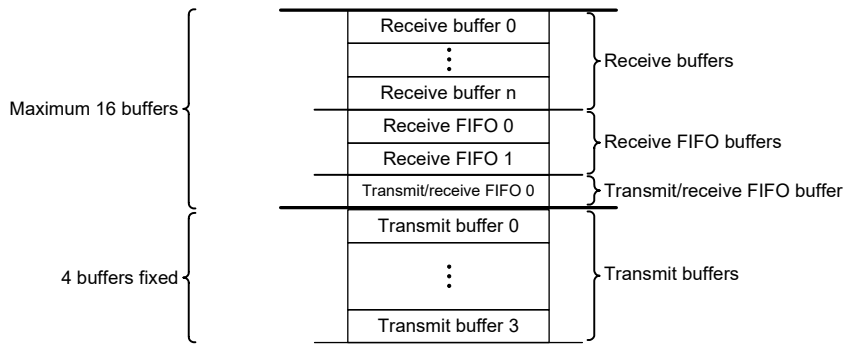

Note: Receive buffers, receive FIFO buffers, transmit/receive FIFO buffer, and transmit buffers are located in succession.

Figure 30.20 Buffer Configuration

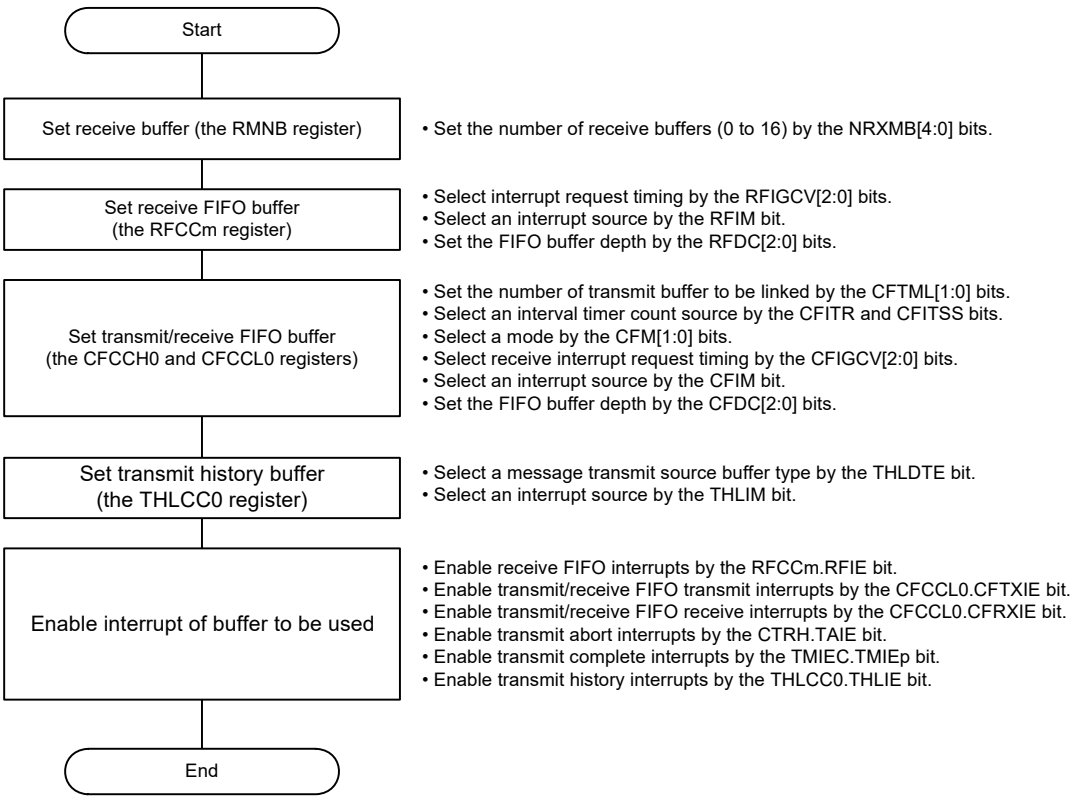

Figure 30.21 Buffer Setting Procedure

30.10 Reception Procedure

30.10.1 Receive Buffer Reading Procedure

When the processing to store received messages in a receive buffer starts, the RMND0.RMNSn flag becomes 1 (receive buffer n contains a new message). Messages can be read from the RMIDLn, RMIDHn, RMTSn, RMPTRn, and RMDF0n to RMDF3n registers. If the next message has been received before the current message is read from the receive buffer, the message is overwritten. Figure 30.22 shows the receive buffer reading procedure.

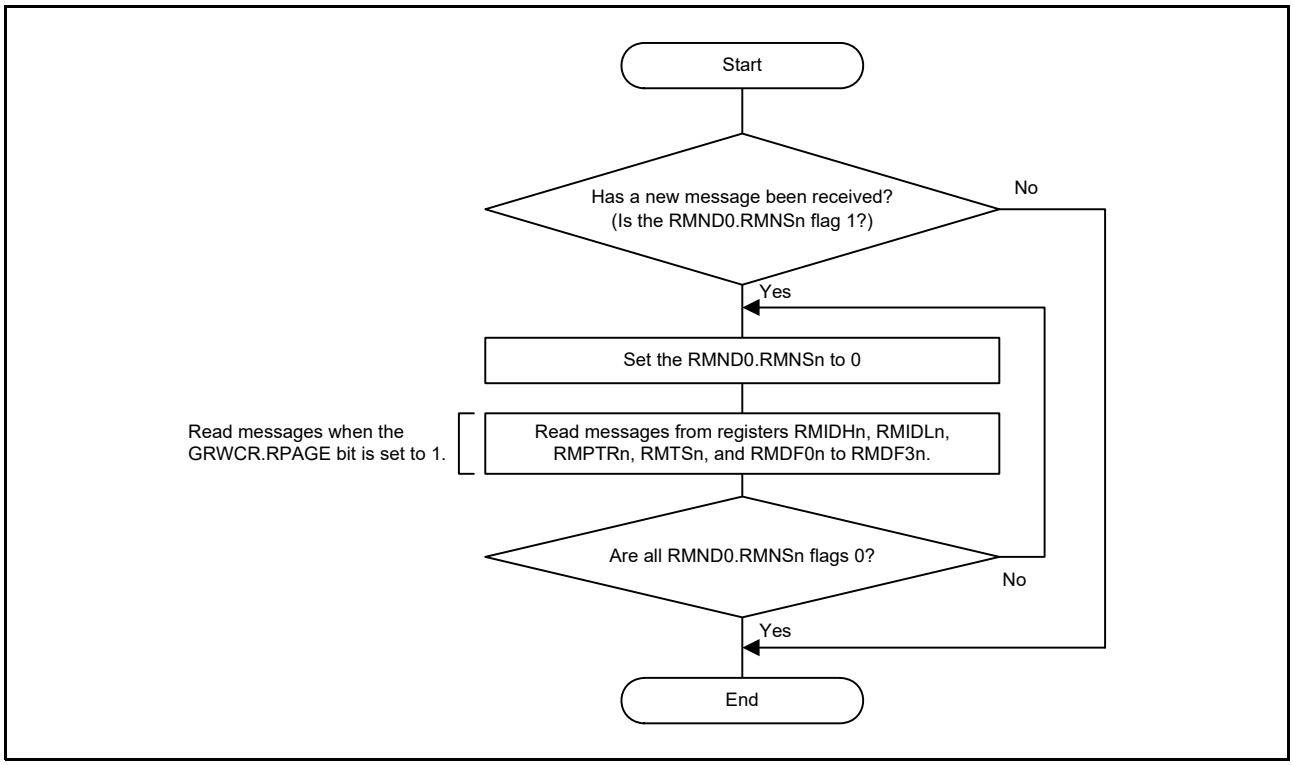

Figure 30.22 Receive Buffer Reading Procedure

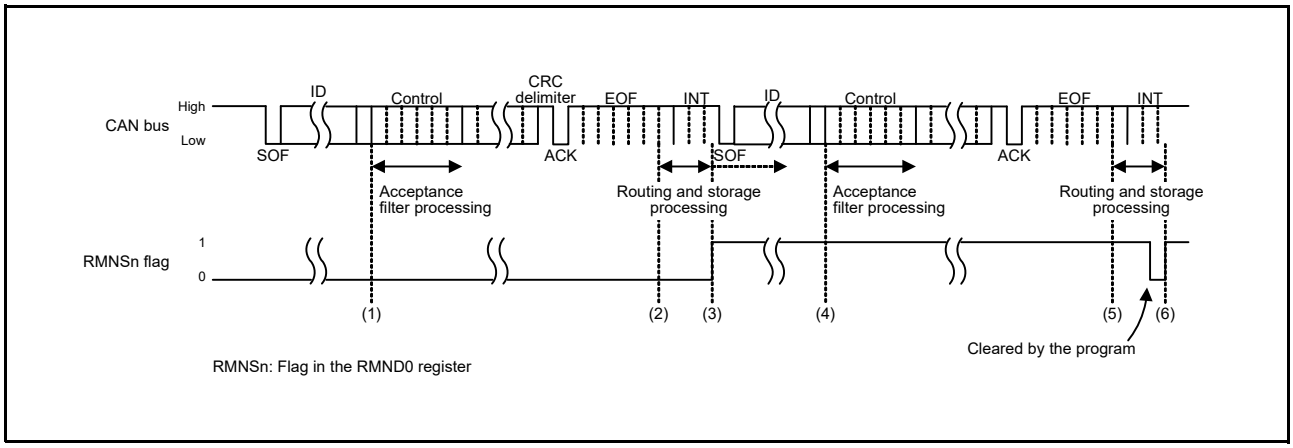

Figure 30.23 Receive Buffer Reception Timing Chart

(1) When the ID field in a message has been received, the acceptance filter processing starts.

(2) When the message matches the receive rule of the corresponding channel and the message has been successfully received, the routing processing to transfer the message to the specified buffer starts. When the GCFGL.DCE bit is set to 1 (DLC check is enabled), the DLC filter processing starts at this time.

(3) When the message has passed through the DLC filter processing, the processing to store the message in the specified receive buffer starts.
When the message storage processing starts, the corresponding RMND0.RMNSn flag becomes 1 (receive buffer contains a new message). If other channels are performing filter processing or transmit priority determination processing, the routing processing and the storage processing may be delayed.

(4) When the ID field of the next message has been received, the acceptance filter processing starts.

(5) When the message matches the receive rule of the corresponding channel and the message has been successfully received, the routing processing to transfer the message to the specified buffer starts. When the GCFGL.DCE bit is set to 1 (DLC check is enabled), the DLC filter processing starts at this time.

(6) When the corresponding RMND0.RMNSn flag becomes 0 (receive buffer contains no new message), this flag becomes 1 again when the message storage processing starts. Even if the RMND0.RMNSn flag remains 1, a new message is overwritten to the receive buffer. The RMND0.RMNSn flag should not be set to 0 during storage of messages.

30.10.2 FIFO Buffer Reading Procedure

When received messages have been stored in one or more receive FIFO buffers or a transmit/receive FIFO buffer that is set to receive mode, the corresponding message count display counter (RFSTSm.RFMC[5:0] flags or CFSTS0.CFMC[5:0] flags) is incremented. At this time, when the RFCCm.RFIE bit (receive FIFO interrupt is enabled) or the CFCCL0.CFRXIE bit (transmit/receive FIFO receive interrupt is enabled) is set to 1, an interrupt request is generated. Received messages can be read from the RFIDLm, RFIDHm, RFTSm, RFPTRm, and RFDF0m to RFDF3m registers (receive FIFO buffers) or the CFIDL0, CFIDH0, CFTS0, CFPTR0, and CFDF00 to CFDF30 registers (transmit/receive FIFO buffers). Messages in FIFO buffers can be read sequentially on a first-in, first-out basis.
When the message count display counter value matches the FIFO buffer depth (a value set by the RFCCm.RFDC[2:0] bits or the CFCCL0.CFDC[2:0] bits), the RFFLL or CFFLL flag becomes 1 (the receive FIFO buffer is full).
When all messages have been read out of the FIFO buffer, the RFSTSm.RFEMP flag or CFSTS0.CFEMP flag becomes 1 (the receive FIFO buffer contains no unread message (buffer empty)).
If the RFCCm.RFE bit or the CFCCL0.CFE bit is set to 0 (no receive FIFO buffer is used) with the interrupt request flag (RFSTSm.RFIF flag or CFSTS0.CFRXIF flag) set to 1 (a receive FIFO interrupt request is present), the interrupt request flag is not automatically set to 0. Set the interrupt request flag to 0 by the program.

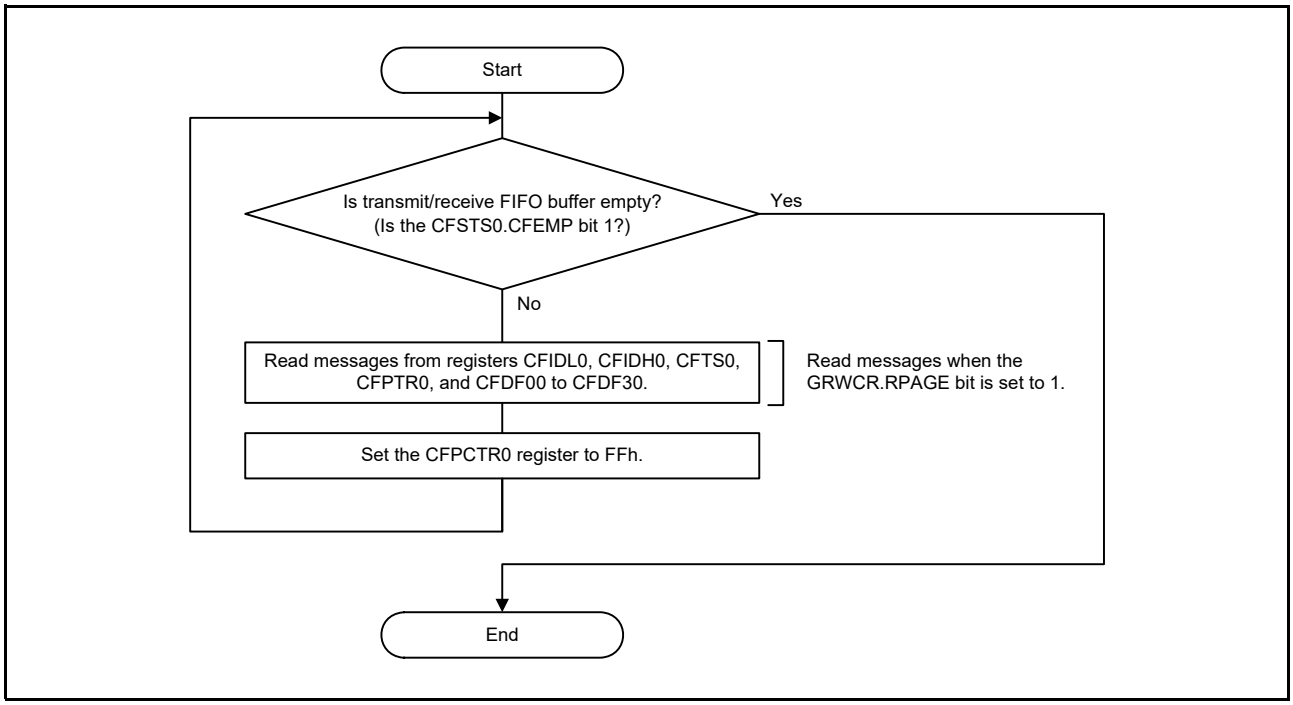

Figure 30.24 Transmit/Receive FIFO Buffer Reading Procedure

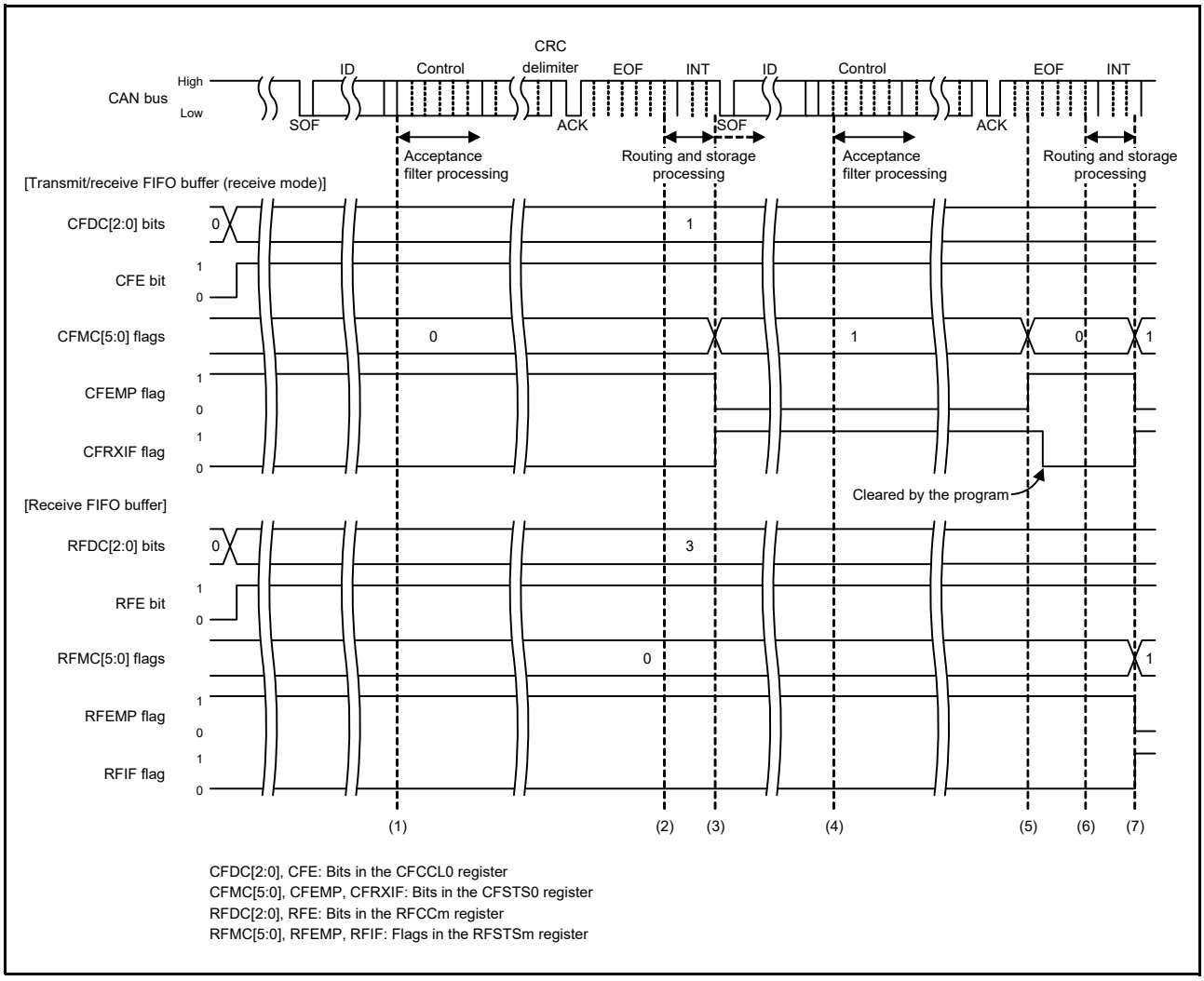

Figure 30.25 FIFO Buffer Reception Timing Chart

(1) When the ID field in a message has been received, the acceptance filter processing starts.

(2) When the message matches the receive rule of the corresponding channel and the message has been successfully received, the routing processing to transfer the message to the specified buffer starts. When the GCFGL.DCE bit is set to 1 (DLC check is enabled), the DLC filter processing starts at this time.

(3) When the message has passed through the DLC filter processing and the CFCCL0.CFE value is 1 (transmit/receive FIFO buffers are used) and the CFCCL0.CFDC[2:0] value is 001b or more, the message is stored in the transmit/receive FIFO buffer that is set to receive mode. The CFSTS0.CFMC[5:0] value is incremented and becomes 01h. When the CFCCL0.CFIM bit is set to 1 (a FIFO receive interrupt request is generated each time a message has been received), the CFSTS0.CFRXIF flag becomes 1 (a transmit/receive FIFO receive interrupt request is present). The CFSTS0.CFRXIF flag can be reset to 0 by the program.

(4) When the ID field of the next message has been received, the acceptance filter processing starts.

(5) Read received messages from the CFIDL0, CFIDH0, CFTS0, CFPTR0, and CFDF00 to CFDF30 registers and write FFh to the CFPCTR0 register. Thereby the CFSTS0.CFMC[5:0] flags are decremented and become 00h, and the CFSTS0.CFEMP flag becomes 1 (the transmit/receive FIFO buffer contains no message (buffer empty)).

(6) When the message matches the receive rule of the corresponding channel and the message has been successfully received, the routing processing to transfer the message to the specified buffer starts. When the GCFGL.DCE bit is set to 1 (DLC check is enabled), the DLC filter processing starts at this time.

(7) The message is stored in the transmit/receive FIFO buffer set in receive mode, when the message has passed through the DLC filter process if the CFCCL0.CFE bit is set to 1 (transmit/receive FIFO buffers are used) and the

CFCCL0.CFDC[2:0] bits are set to 001b or more.
The CFSTS0.CFMC[5:0] value is incremented to 01h. When the CFCCL0.CFIM bit is set to 1 (an interrupt occurs each time a message has been received), the CFSTS0.CFRXIF flag becomes 1 (a transmit/receive FIFO receive interrupt request is present).
The message is stored in the receive FIFO buffer, if the RFCCm.RFE bit is set to 1 (receive FIFO buffers are used) and RFCCm.RFDC[2:0] bits are set to 001b or more. The RFSTSm.RFMC[5:0] value is incremented to 01h. When the RFCCm.RFIM bit is set to 1 (an interrupt occurs each time a message has been received), the RFSTSm.RFIF flag becomes 1 (a receive FIFO interrupt request is present).

30.11 Transmission Procedure

30.11.1 Procedure for Transmission from Transmit Buffers

Figure 30.26 shows the procedure for transmission from transmit buffers.
Figure 30.27 shows a timing chart where messages are transmitted from two transmit buffers and transmission has been successfully completed. Figure 30.28 shows a timing chart where messages are transmitted from two transmit buffers and transmit abort has been completed.

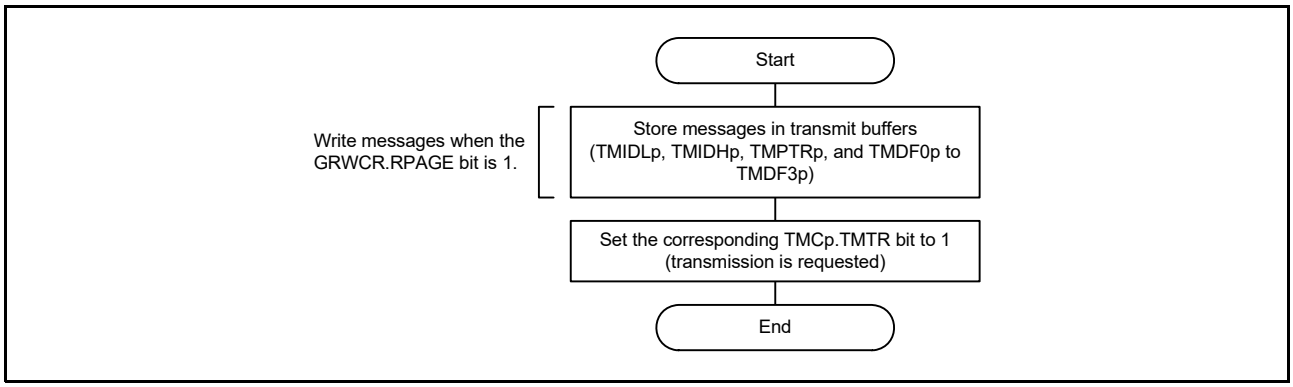

Figure 30.26 Procedure for Transmission from Transmit Buffers

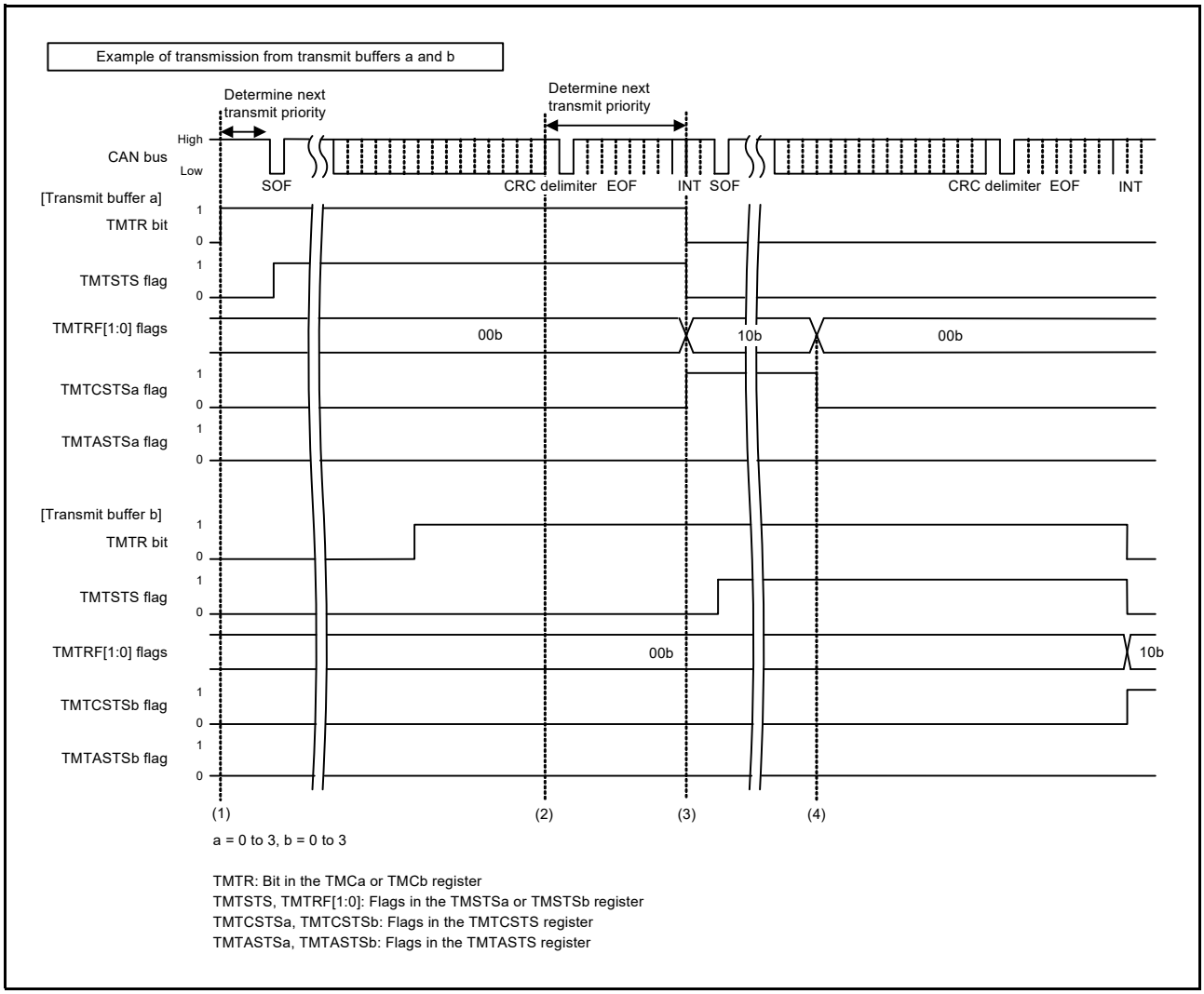

Figure 30.27 Transmit Buffer Transmission Timing Chart (Transmission Completed Successfully)

(1) When the TMCa.TMTR bit (a = 0 to 3) is set to 1 while the CAN bus is idle, the transmit priority determination processing starts to determine the highest-priority transmit buffer. If transmit buffer a is determined to be the highest-priority transmit buffer, the corresponding TMSTSa.TMTSTS flag becomes 1 (transmission is in progress) and the CAN channel starts transmitting data.

(2) When a transmit request from a buffer is present, the priority determination starts with the CRC delimiter for the next transmission.

(3) When transmit completes successfully, the TMSTSa.TMTRF[1:0] flags become 10b (transmission has been completed (without transmit abort request)), the TMSTSa.TMTSTS flag and the TMCa.TMTR bit become 0, and the TMTCSTS.TMTCSTSa flag becomes 1. When the TMIEC.TMIEa value is 1 (transmit buffer interrupt is enabled), a transmit interrupt request is generated. To clear the interrupt request, set the TMSTSa.TMTRF[1:0] flags to 00b (transmission is in progress or no transmit request is present).

(4) Before starting the next transmission, set the TMSTSa.TMTRF[1:0] flags to 00b. Write the next message to the transmit buffer, and then set the TMCa.TMTR bit to 1 (transmission is requested). The TMCa.TMTR bit can be set to 1 only when the TMSTSa.TMTRF[1:0] flag value is 00b.
If an arbitration lost has occurred after transmission is started, the TMSTSa.TMTSTS flag becomes 0. The transmit priority determination is reexecuted at the beginning of the CRC delimiter to search the highest-priority transmit buffer. If an error has occurred during transmission or after arbitration lost, the priority determination processing is reexecuted during transmission of an error frame.

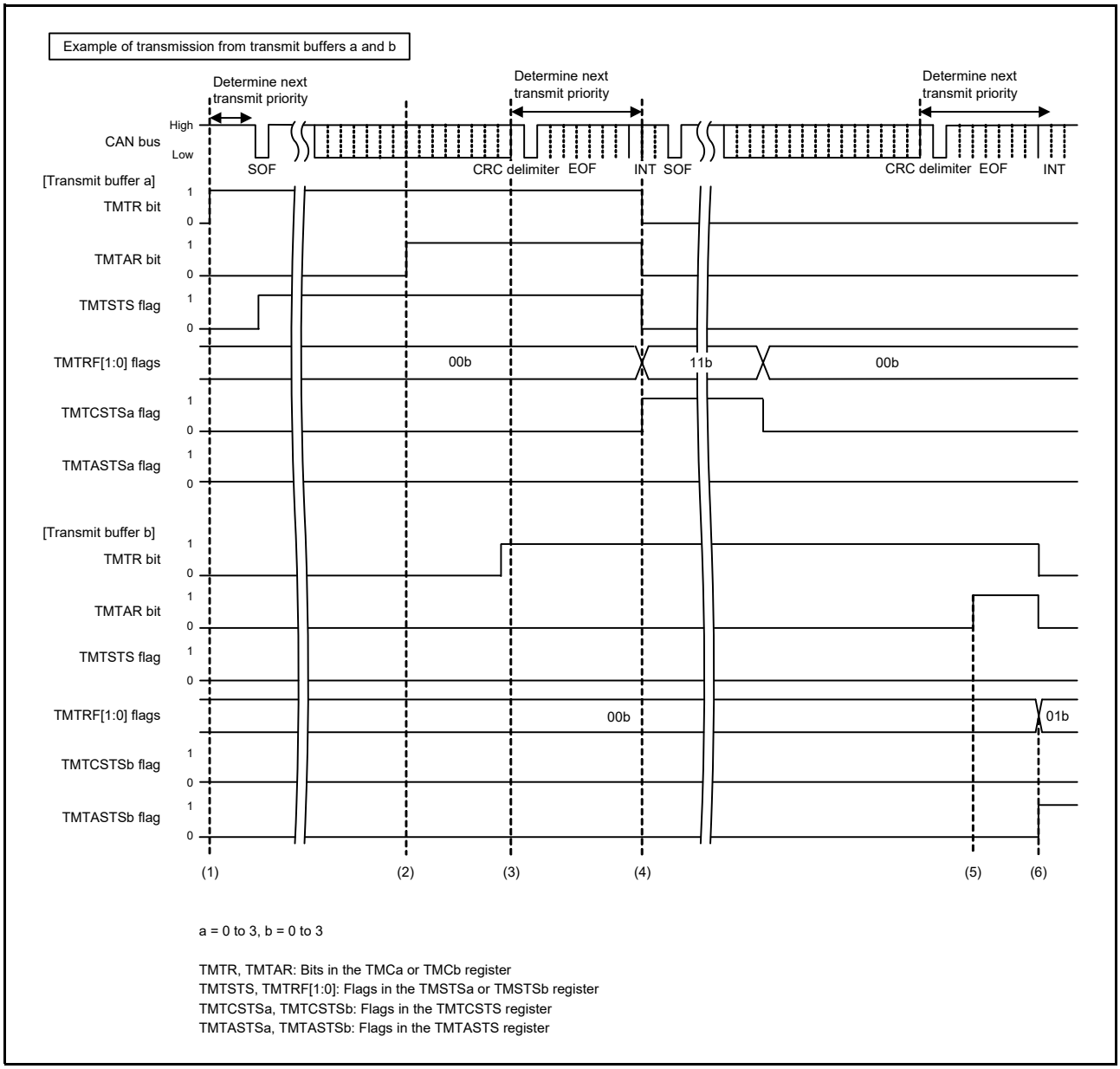

Figure 30.28 Transmit Buffer Transmission Timing Chart (Transmit Abort Completed)

(1) When the TMCa.TMTR bit (a = 0 to 3) is set to 1 while the CAN bus is idle, the transmit priority determination processing starts to determine the highest-priority transmit buffer. If transmit buffer a is determined to be the highest-priority transmit buffer, the corresponding TMSTSa.TMTSTS flag becomes 1 (transmission is in progress) and the CAN channel starts transmitting data.

(2) When it is determined that the transmit buffer is used for the next transmission or transmission is in progress, message transmission is not aborted unless an error or arbitration lost occurs even if the TMCa.TMTAR bit is set to 1 (transmit abort is requested).

(3) The priority determination starts with the CRC delimiter for the next transmission. In this timing chart, buffer b is not selected as the next transmit buffer.

(4) When transmit completes successfully, the TMSTSa.TMTRF[1:0] flags become 11b (transmission has been completed (with transmit abort request)), the TMSTSa.TMTSTS flag and the TMCa.TMTR bit become 0, and the TMTCSTS.TMTCSTSa flag becomes 1.
When the TMIEC.TMIEa value is 1 (transmit buffer interrupt is enabled), a transmit interrupt request is generated.

To clear the interrupt request, set the TMSTSa.TMTRF[1:0] flags to 00b (transmission is in progress or no transmit request is present).

(5) While another CAN node is transmitting data on the CAN bus (TMSTSa.TMTSTS flag = 0), if the TMCa.TMTAR bit is set to 1 while the corresponding channel is determining transmit priority, the TMCa.TMTR bit cannot be set to 0.

(6) After the internal processing time has passed, the transmission is terminated and the TMSTSa.TMTRF[1:0] flags become 01b and the TMTASTS.TMTASTSa flag becomes 1. When the transmit buffer is not transmitting data and is not selected as the next transmit buffer and priority determination is not being made, an abort request is immediately accepted and the TMSTSa.TMTRF flag becomes 01b. At this time, the TMCa.TMTR and TMTAR bits become 0.
When transmit abort is completed with the CTRH.TAIE bit set to 1 (transmit abort interrupt is enabled), an interrupt request is generated. To clear the interrupt request, set the TMSTSa.TMTRF[1:0] flags to 00b.

If an arbitration lost has occurred after the CAN channel started transmission, the TMSTSa.TMTSTS flag becomes 0. The transmit priority determination is reexecuted at the beginning of the CRC delimiter to search the highest-priority transmit buffer. If an error has occurred during transmission or after arbitration lost, the priority determination processing is reexecuted during transmission of an error frame.

30.11.2 Procedure for Transmission from Transmit/Receive FIFO Buffers

Figure 30.29 shows the procedure for transmission from transmit/receive FIFO buffers.
Figure 30.30 shows a timing chart where messages are transmitted from the transmit/receive FIFO buffers and transmission has been successfully completed. Figure 30.31 shows a timing chart where messages are transmitted from the transmit/receive FIFO buffers and transmit abort has been completed.

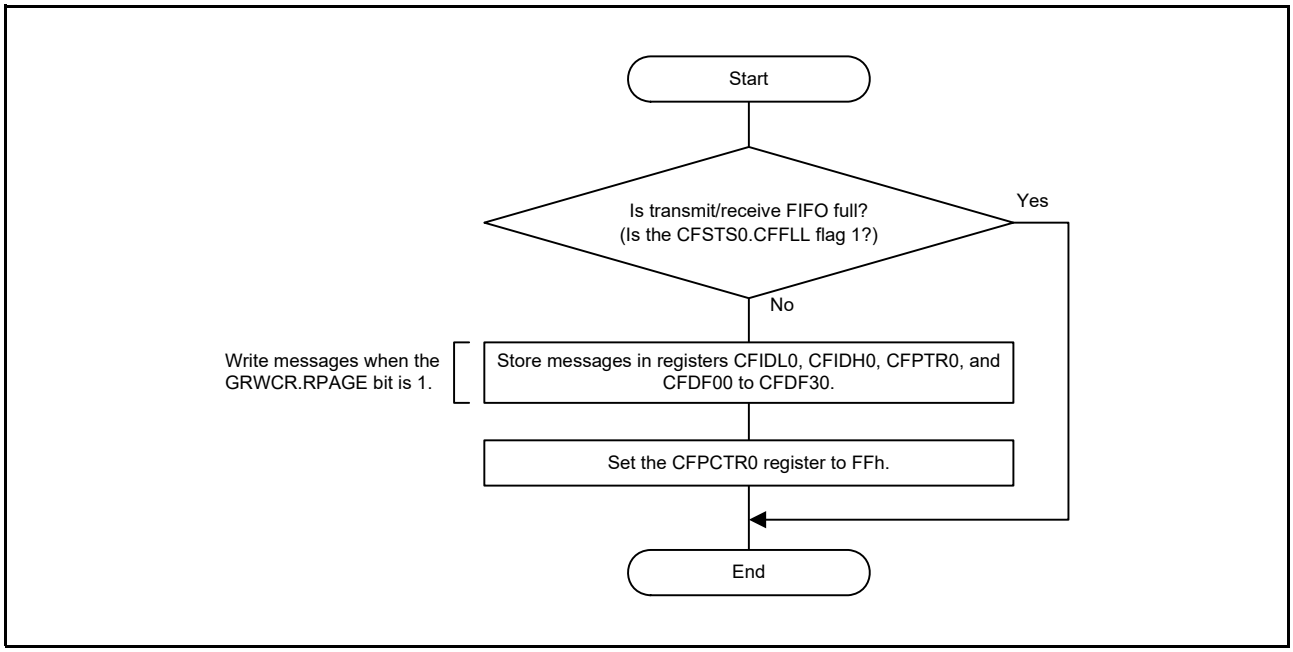

Figure 30.29 Procedure for Transmission from Transmit/Receive FIFO Buffers

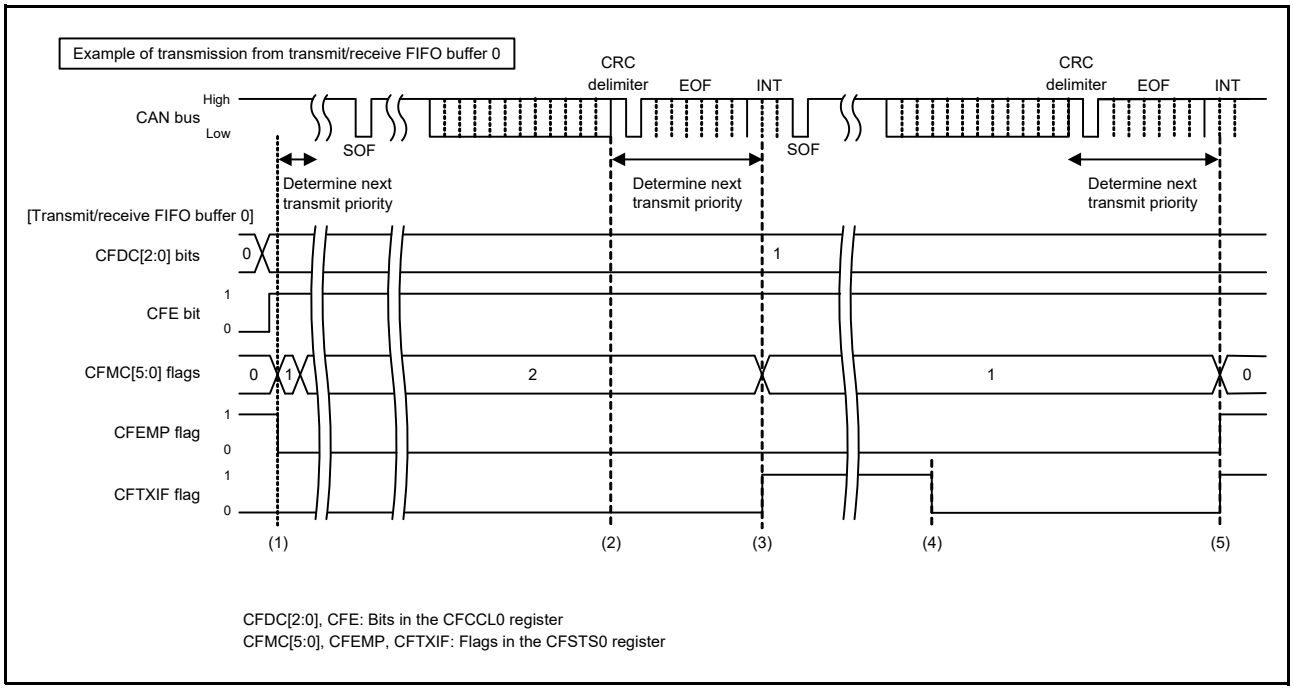

Figure 30.30 Transmit/Receive FIFO Buffer Transmission Timing Chart (Transmission Completed Successfully)

(1) While the CAN bus is idle, when the CFCCL0.CFE value is 1 (transmit/receive FIFO buffer 0 is used) and the CFCCL0.CFDC[2:0] value is 001b (4 messages) or more and the CFSTS0.CFMC[5:0] value is 01h or more, the priority determination processing starts to determine the highest-priority transmit message. When the highest-priority transmit message has been determined, transmission of the message starts.

(2) When a transmit request from a buffer is present, the priority determination starts with the CRC delimiter for the next transmission.

(3) When transmit completes successfully, the CFSTS0.CFMC[5:0] value is decremented. Setting the CFCCL0.CFIM bit to 1 (a FIFO transmit interrupt request is generated each time a message has been transmitted) sets the CFSTS0.CFTXIF flag to 1 (a transmit/receive FIFO transmit interrupt request is present).

(4) The CFSTS0.CFTXIF flag can be cleared by the program.

(5) Message transmission from transmit/receive FIFO buffer 0 has been completed and the CFSTS0.CFMC[5:0] value is decremented. The CFSTS0.CFMC[5:0] flags become 00h and therefore the CFSTS0.CFEMP flag becomes 1 (the transmit/receive FIFO buffer contains no message (buffer empty)).
Transmission is continued until the CFSTS0.CFEMP flag becomes 1. It is possible to continuously store transmit messages in FIFO buffers until the CFSTS0.CFFLL flag becomes 1 (the transmit/receive FIFO buffer is full).

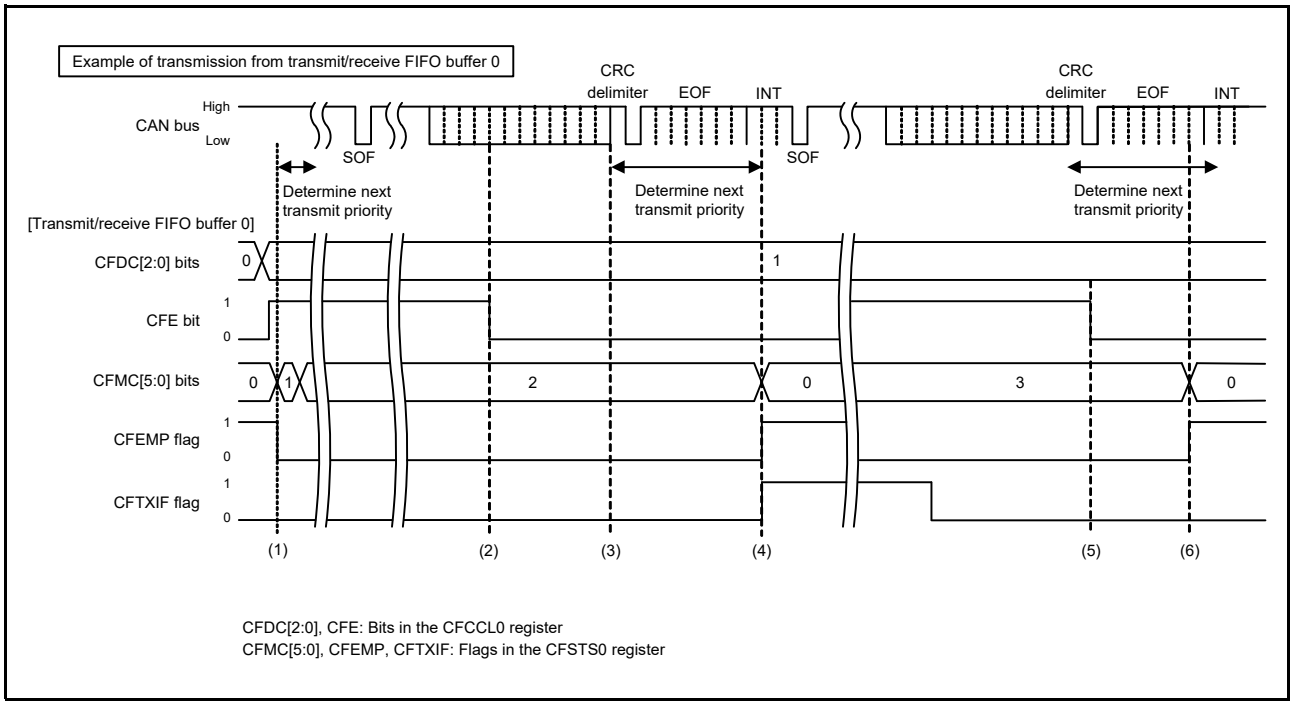

Figure 30.31 Transmit/Receive FIFO Buffer Transmission Timing Chart (Transmit Abort Completed)

(1) While the CAN bus is idle, when the CFCCL0.CFE value is 1 (transmit/receive FIFO buffer 0 is used) and the CFCCL0.CFDC[2:0] value is 001b (4 messages) or more and the CFSTS0.CFMC[5:0] value is 01h or more, the priority determination processing starts to determine the highest-priority transmit message. When the highest-priority transmit message has been determined, transmission of the message starts.

(2) When transmission is in progress or it is determined that the transmit/receive FIFO buffer is used for the next transmission, message transmission is not aborted unless an error or arbitration lost occurs even if the CFCCL0.CFE bit is set to 0 (no transmit/receive FIFO buffer 0 is used).

(3) When a transmit request from a buffer is present, the priority determination starts with the CRC delimiter for the next transmission. In this figure, transmit/receive FIFO buffer 0 is not selected as a buffer for the next transmission.

(4) When transmit completes successfully, the CFSTS0.CFMC[5:0] value becomes 00h. Setting the CFCCL0.CFIM bit to 1 (a FIFO transmit interrupt request is generated each time a message has been transmitted) sets the CFSTS0.CFTXIF flag to 1 (a transmit/receive FIFO transmit interrupt request is present). The CFSTS0.CFTXIF flag can be cleared by the program.

(5) If another CAN node on the CAN bus is transmitting data (not from transmit/receive FIFO buffer 0), transmit/receive FIFO buffer 0 cannot be disabled immediately even if the CFCCL0.CFE bit is set to 0 (no transmit/receive FIFO buffer 0 is used) during transmit priority determination. (The CFSTS0.CFEMP flag is not set to 1 (the transmit/receive FIFO buffer contains no message (buffer empty)) immediately.)

(6) After the internal processing time has passed, transmit/receive FIFO buffers are disabled and the CFSTS0.CFMC[5:0] flags become 00h and the CFSTS0.CFEMP flag becomes 1. When the transmit/receive FIFO buffer 0 is not transmitting data and is not selected as the next transmit buffer and priority determination is not in progress, the transmit/receive FIFO buffer 0 is immediately disabled. (The CFSTS0.CFMC[5:0] flags become 00h and the CFSTS0.CFEMP flag becomes 1.)

30.11.3 Transmit History Buffer Reading Procedure

Transmit history data can be read from the THLACC0 register. The next data can be accessed by writing FFh to the corresponding THLPCTR0 register after reading a set of data. Figure 30.32 shows the transmit history buffer reading procedure.

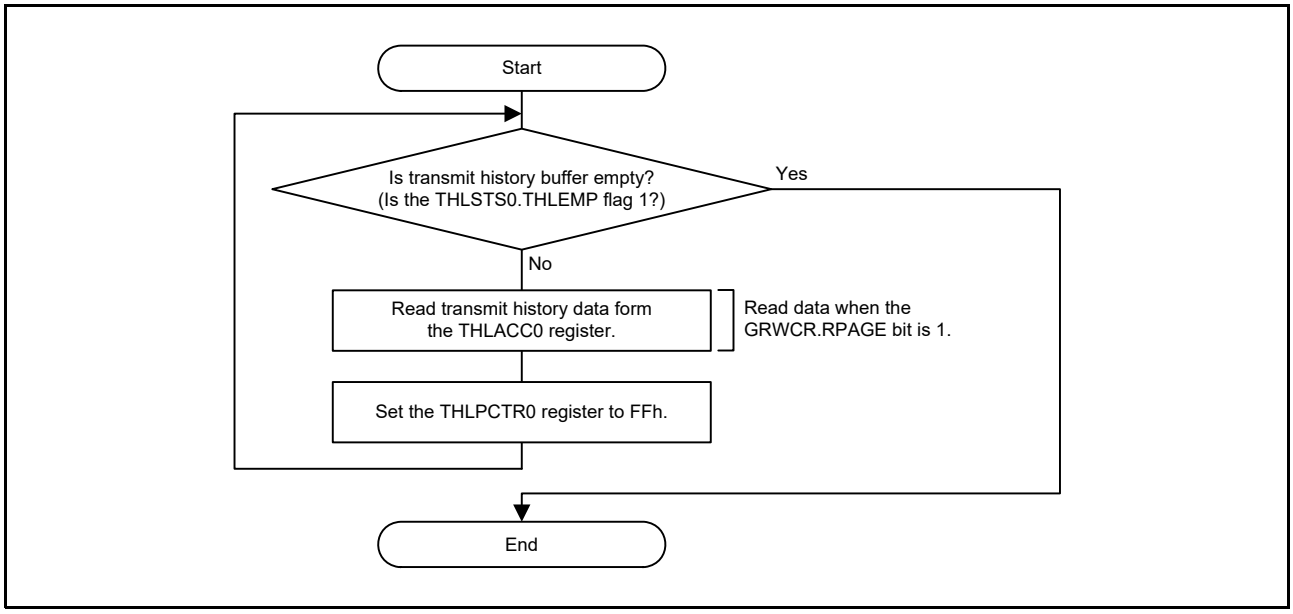

Figure 30.32 Transmit History Buffer Reading Procedure

30.12 Test Settings

30.12.1 Self-Test Mode Setting Procedure

Self-test mode allows communication test on a channel basis by receiving messages transmitted from the own node. Figure 30.33 shows the self-test mode setting procedure.

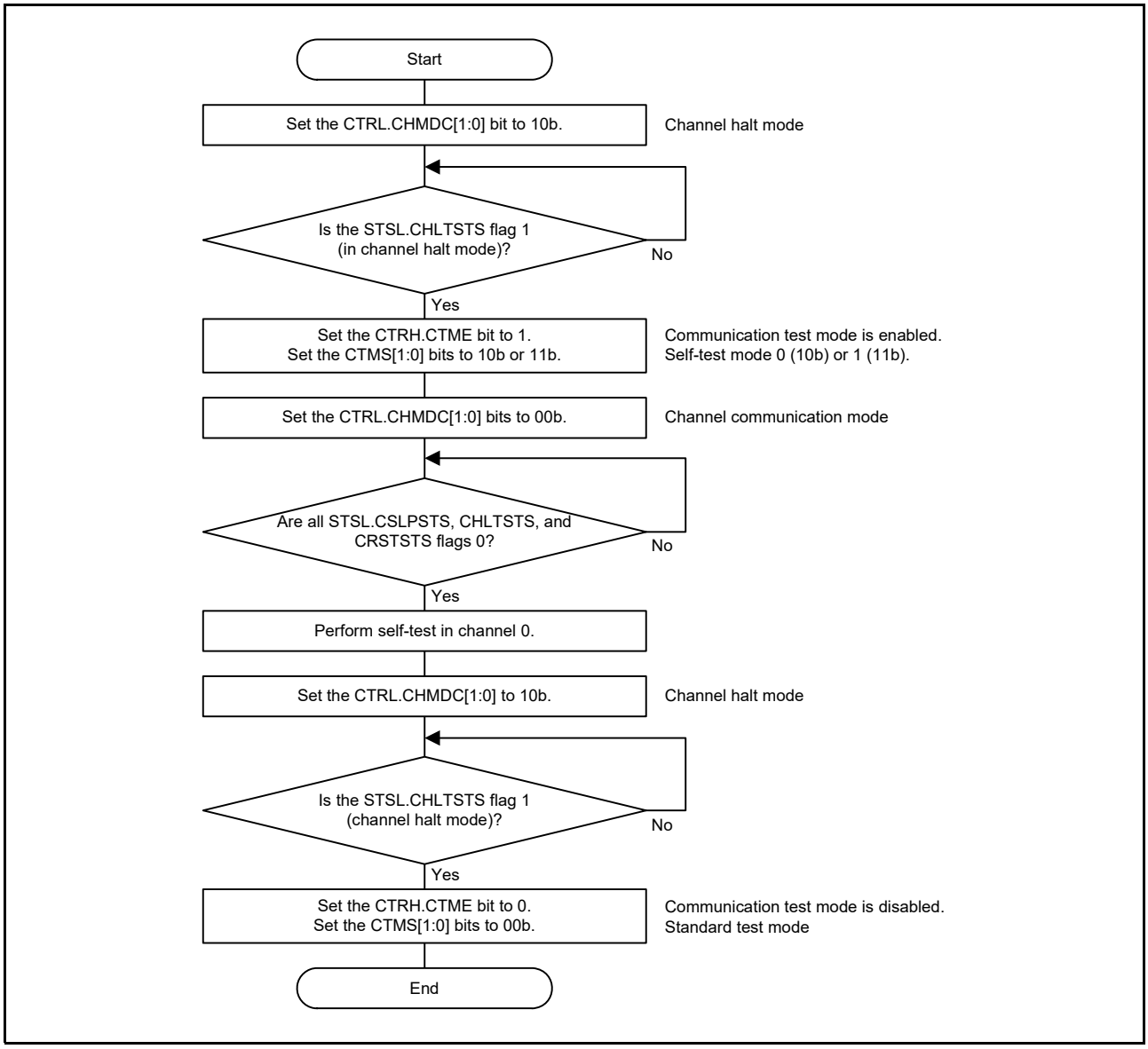

Figure 30.33 Self-Test Mode Setting Procedure

30.12.2 Protection Unlock Procedure

Since the global test functions shown in Table 30.14 are protected, write unlock data 1 and unlock data 2 in succession to the GLOCKK.LOCK[15:0] bits, and then set each test function bit to 1.

Table 30.14 Protection Unlock Data for Test Functions

Test Function	Protection Unlock Data 1	Protection Unlock Data 2	Target Bit
RAM test	7575h	8A8Ah	GTSTCTRL.RTME bit

If an incorrect value has been written to the GLOCKK.LOCK[15:0] bits, retry the procedure above from writing of unlock data 1.
Figure 30.34 shows the protection unlock procedure.

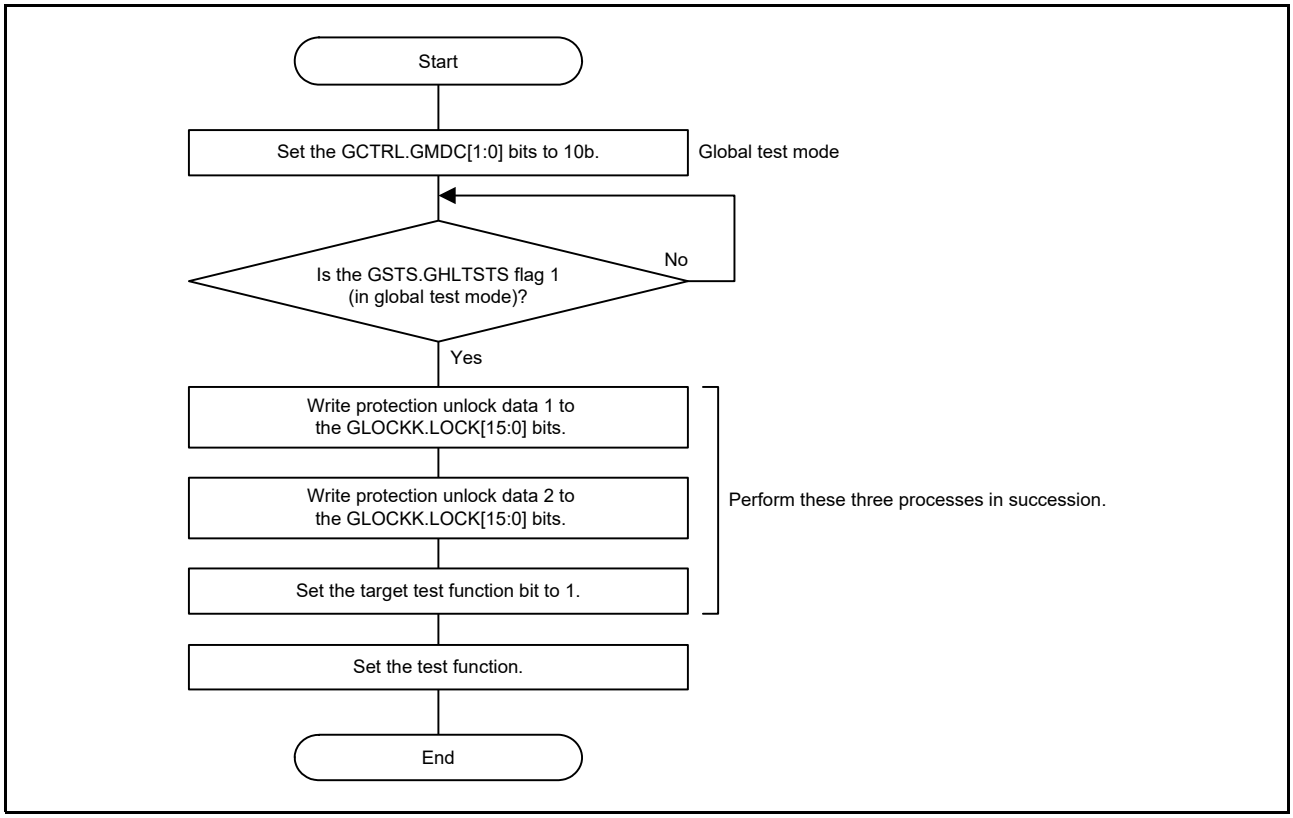

Figure 30.34 Protection Unlock Procedure

30.12.3 RAM Test Setting Procedure

RAM tests include CAN RAM read/write test. The read/write test verifies that data written to the RAM is read correctly. Before closing the RAM test, write 0000h to all pages of the CAN RAM.

Figure 30.35 shows the RAM test setting procedure.

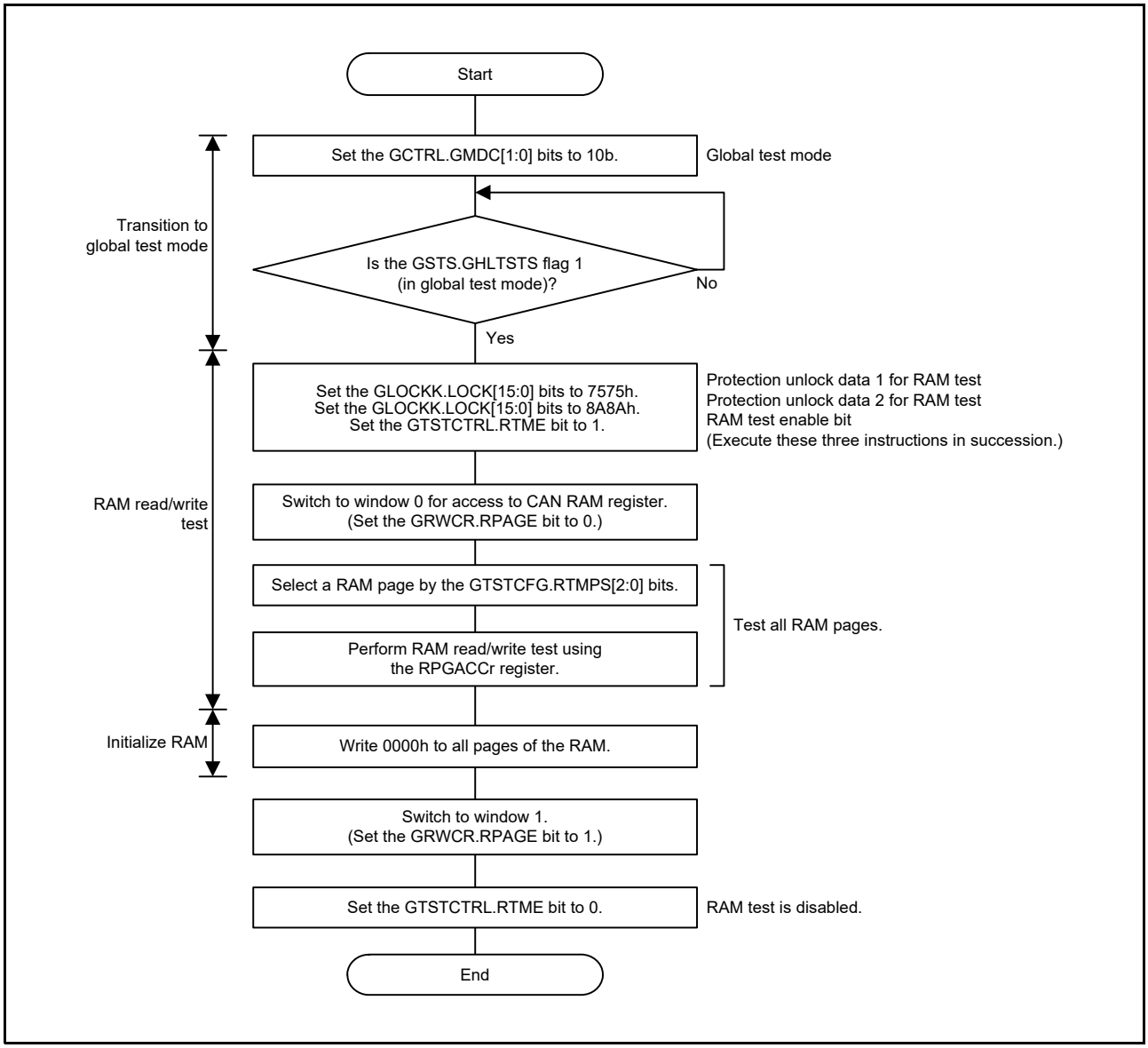

Figure 30.35 RAM Test Setting Procedure

30.13 Notes on the CAN Module

- When changing a global mode, check the GSTS.GSLPSTS, GHLTSTS, and GRSTSTS flags for transitions. When changing a channel mode, check the STSL.CSLPSTS, CHLTSTS, and CRSTSTS flags for transitions.
- The acceptance filter processing checks receive rules sequentially in ascending order from the minimum rule number. If the same ID, IDE bit, or RTR bit value is set for multiple receive rules, the minimum number of receive rule is used for the acceptance filter processing. If the message does not pass through the subsequent DLC filter processing, the data processing is terminated without returning to the acceptance filter processing and the message is not stored in the buffer.
- When linking transmit buffers to transmit/receive FIFO buffers, set the control register (TCMp) of the corresponding transmit buffer to 00h. The status register (TMSTSp) of the corresponding transmit buffer should not be used. Flags in other status registers (registers TMTRSTS, TMTCSTS, and TMTASTS), which correspond to transmit buffers linked to transmit/receive FIFO buffers remain unchanged. Set the enable bit in the corresponding interrupt enable register (the TMIEC register) to 0 (transmit buffer interrupt is disabled).
- When the CAN bit time clock is selected as a timestamp counter clock source, the timestamp counter stops when the corresponding channel has transitioned to channel reset mode or channel halt mode.
- In case of an attempt to store a new receive message when the receive FIFO buffer and the transmit/receive FIFO buffer are full, the new message is discarded. If you wish to store a new transmit message in the transmit/receive FIFO buffer, check that the transmit/receive FIFO buffer is not full.
- Since an interrupt request flag in the CAN module is not automatically set to 0 when an interrupt is accepted, the flags must be set to 0 by software. After the corresponding interrupt request flag has been set to 1, an interrupt is not generated even if an interrupt source condition is satisfied.
- In order to generate the CAN related interrupt that several interrupt sources are gathered, the following condition should be met:
  All interrupt request flags corresponding to these interrupt sources in the CAN module are set to 0 (note that this only applies to those interrupt request flags for which the corresponding interrupt enable bits shown in Table 30.11 are set to 1).
- The values of unused receive buffer registers (RMIDLn, RMIDHn, RMTSn, RMPTRn, and RMDF0n to RMDF3n (n = 0 to 15)), receive FIFO access registers (RFIDLm, RFIDHm, RFTSm, RFPTRm, and RFDF0m to RFDF3m (m = 0, 1)), and transmit/receive FIFO access registers (CFIDL0, CFIDH0, CFTS0, CFPTR0, and CFDF00 to CFDF30) become undefined once the CAN module exits from global reset mode and enters global operating mode or global test mode.

31. Serial Peripheral Interface (RSPIb)

In this section, “PCLK” is used to refer to PCLKB.

31.1 Overview

This MCU includes one channel of Serial Peripheral Interface (RSPI).
The RSPI channels are capable of high-speed, full-duplex or simplex (transmit-only) synchronous serial communications with multiple processors and peripheral devices.
Table 31.1 lists the specifications of the RSPI, and Figure 31.1 shows a block diagram of the RSPI.
In this section, m as used with the RSPI command registers (SPCMDm) indicates 0 to 7.

Table 31.1 RSPI Specifications (1/2)

Item	Description
Number of channels	One channel
RSPI transfer functions	• Use of MOSI (master out/slave in), MISO (master in/slave out), SSL (slave select), and RSPCK (RSPI clock) signals allows serial communications through SPI operation (4-wire method) or clock synchronous operation (3-wire method). • Communication mode: Full-duplex or simplex (transmit-only) can be selected. • Switching of the polarity of RSPCK • Switching of the phase of RSPCK
Data format	• MSB first/LSB first selectable • Transfer bit length is selectable as 8, 9, 10, 11, 12, 13, 14, 15, 16, 20, 24, or 32 bits. • 128-bit transmit/receive buffers • Up to four frames can be transferred in one round of transmission/reception (each frame consisting of up to 32 bits).
Bit rate	• In master mode, the on-chip baud rate generator generates RSPCK by frequency-dividing PCLK (the division ratio ranges from divided by 2 to divided by 4096). • In slave mode, the minimum PCLK clock divided by 6 can be input as RSPCK (the maximum frequency of RSPCK is that of PCLK divided by 6). Width at high level: 3 cycles of PCLK; width at low level: 3 cycles of PCLK
Buffer configuration	• Double buffer configuration for the transmit/receive buffers • 128 bits for the transmit/receive buffers
Error detection	• Mode fault error detection • Overrun error detection*1 • Parity error detection • Underrun error detection
SSL control function	• Four SSL pins (SSLA0 to SSLA3) for each channel • In single-master mode, SSLA0 to SSLA3 pins are output. • In multi-master mode: SSLA0 pin for input, and SSLA1 to SSLA3 pins for either output or unused. • In slave mode: SSLA0 pin for input, and SSLA1 to SSLA3 pins for unused. • Controllable delay from SSL output assertion to RSPCK operation (RSPCK delay) Range: 1 to 8 RSPCK cycles (set in RSPCK-cycle units) • Controllable delay from RSPCK stop to SSL output negation (SSL negation delay) Range: 1 to 8 RSPCK cycles (set in RSPCK-cycle units) • Controllable wait for next-access SSL output assertion (next-access delay) Range: 1 to 8 RSPCK cycles (set in RSPCK-cycle units) • Function for changing SSL polarity
Control in master transfer	• A transfer of up to eight commands can be executed sequentially in looped execution. • For each command, the following can be set: SSL signal value, bit rate, RSPCK polarity/phase, transfer data length, MSB/LSB first, burst, RSPCK delay, SSL negation delay, and next-access delay • A transfer can be initiated by writing to the transmit buffer. • MOSI signal value specifiable in SSL negation • RSPCK auto-stop function

Table 31.1 RSPI Specifications (2/2)

Item	Description
Interrupt sources	• Interrupt sources Receive buffer full interrupt Transmit buffer empty interrupt Error interrupt (mode fault, overrun, underrun, or parity error) Idle interrupt
Event link function (output)	• The following events can be output to the event link controller. (RSPI0) Receive buffer full event Transmit buffer empty event Error event (mode fault, overrun, underrun, or parity error) Idle event Transmit end event
Others	• Function for initializing the RSPI • Loopback mode
Low power consumption function	Module stop state can be set.

Note 1. In master reception and when the RSPCK auto-stop function is enabled, an overrun error does not occur because the transfer clock is stopped at the timing of overrun error detection.

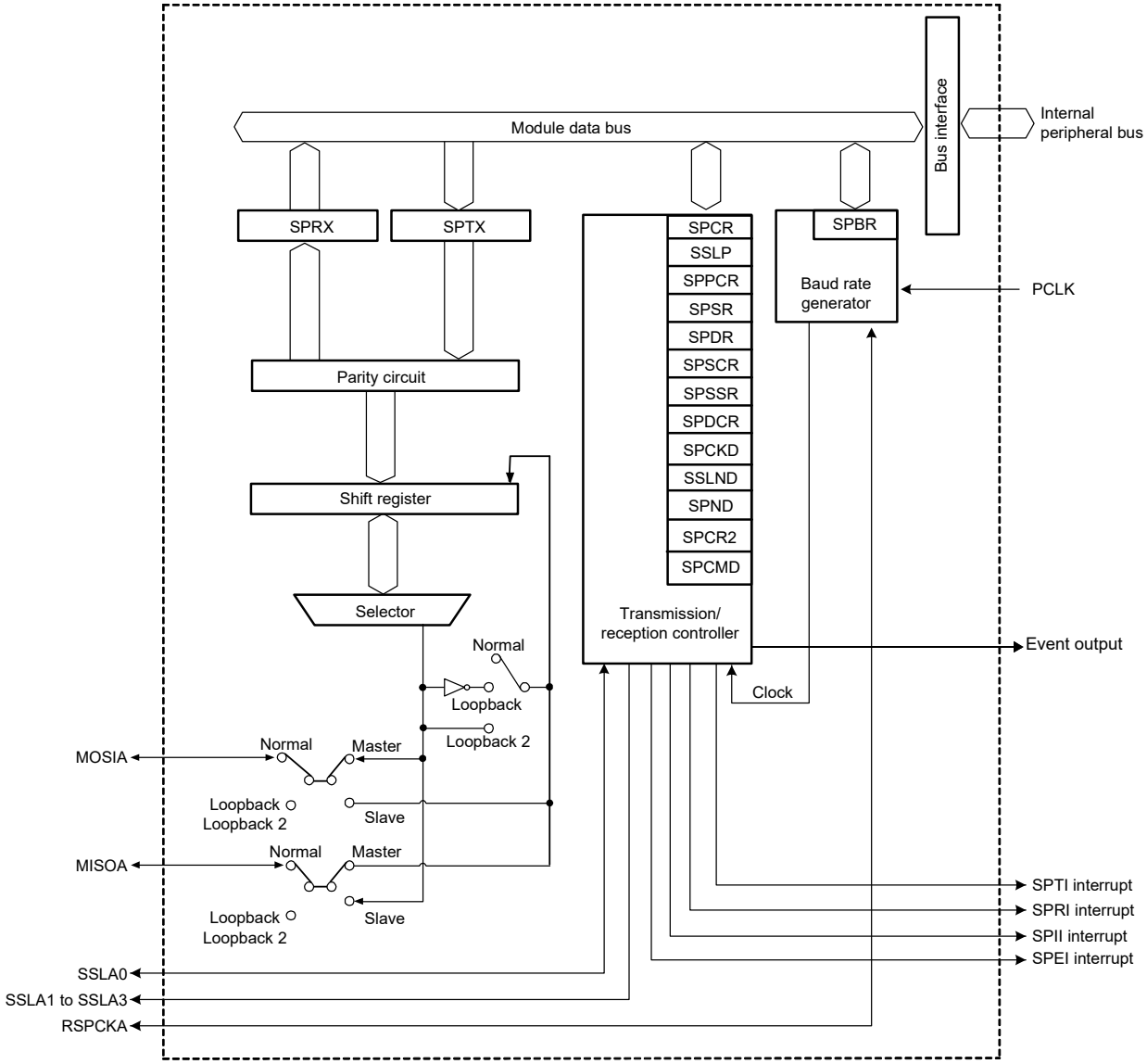

SPCR:	RSPI control register	SPDCR:	RSPI data control register
SPCR2:	RSPI control register 2	SPCKD:	RSPI clock delay register
SSLP:	RSPI slave select polarity register	SSLND:	RSPI slave select negation delay register
SPPCR:	RSPI pin control register	SPND:	RSPI next-access delay register
SPSR:	RSPI status register	SPCMD:	RSPI command registers 0 to 7 (eight registers)
SPDR:	RSPI data register	SPBR:	RSPI bit rate register
SPSCR:	RSPI sequence control register	SPTX:	RSPI transmit buffer
SPSSR:	RSPI sequence status register	SPRX:	RSPI receive buffer

Figure 31.1 RSPI Block Diagram

Table 31.2 lists the I/O pins used in the RSPI.
The RSPI automatically switches the I/O direction of the SSLA0 pin. SSLA0 is set as an output when the RSPI is a single master and as an input when the RSPI is a multi-master or a slave. Pins RSPCKA, MOSIA, and MISOA are automatically set as inputs or outputs according to the setting of master or slave and the level input on the SSLA0 pin. Refer to section 31.3.2, Controlling RSPI Pins for details.

Table 31.2 RSPI Pin Configuration

Channel	Pin Name	I/O	Function
RSPI0	RSPCKA	I/O	Clock I/O
	MOSIA	I/O	Master transmit data I/O
	MISOA	I/O	Slave transmit data I/O
	SSLA0	I/O	Slave selection I/O
	SSLA1	Output	Slave selection output
	SSLA2	Output	Slave selection output
	SSLA3	Output	Slave selection output

31.2 Register Descriptions

31.2.1 RSPI Control Register (SPCR)

Address(es): RSPI0.SPCR 0008 8380h

	b7	b6	b5	b4	b3	b2	b1	b0
	SPRIE	SPE	SPTIE	SPEIE	MSTR	MODFEN	TXMD	SPMS
Value after reset:	0	0	0	0	0	0	0	0

Bit	Symbol	Bit Name	Description	R/W
b0	SPMS	RSPI Mode Select*1	0: SPI operation (4-wire method) 1: Clock synchronous operation (3-wire method)	R/W
b1	TXMD	Communications Operating Mode Select*1	0: Full-duplex communications (enables the receiver) 1: Transmit-only simplex communications (disables the receiver)	R/W
b2	MODFEN	Mode Fault Error Detection Enable *1	0: Disables the detection of mode fault error 1: Enables the detection of mode fault error	R/W
b3	MSTR	RSPI Master/Slave Mode Select*1	0: Slave mode 1: Master mode	R/W
b4	SPEIE	Error Interrupt Enable	0: Disables the generation of error interrupt requests 1: Enables the generation of error interrupt requests	R/W
b5	SPTIE	Transmit Buffer Empty Interrupt Enable	0: Disables the generation of transmit buffer empty interrupt requests 1: Enables the generation of transmit buffer empty interrupt requests	R/W
b6	SPE	RSPI Function Enable	0: Disables the RSPI function 1: Enables the RSPI function	R/W
b7	SPRIE	Receive Buffer Full Interrupt Enable	0: Disables the generation of receive buffer full interrupt requests 1: Enables the generation of receive buffer full interrupt requests	R/W

Note 1. Do not change the values of the MSTR, MODFEN, TXMD, and SPMS bits while the SPE bit is 1.

SPMS Bit (RSPI Mode Select)

The SPMS bit selects SPI operation (4-wire method) or clock synchronous operation (3-wire method).
The SSLA0 to SSLA3 pins are not used in clock synchronous operation. The RSPCKA, MOSIA, and MISOA pins handle communications. If clock synchronous operation is to proceed in master mode (SPCR.MSTR = 1), the SPCMDm.CPHA bit can be set to either 0 or 1. Set the CPHA bit to 1 if clock synchronous operation is to proceed in slave mode (SPCR.MSTR = 0). Do not set the CPHA bit to 0 when clock synchronous operation is to proceed in slave mode (SPCR.MSTR = 0).

TXMD Bit (Communications Operating Mode Select)

The TXMD bit selects full-duplex communications or transmit-only simplex communications.
When performing communications with the TXMD bit set to 1, the RSPI performs only transmit operations and not receive operations (refer to section 31.3.6, Communications Operating Mode).
When the TXMD bit is set to 1, receive buffer full interrupt requests cannot be used.

MODFEN Bit (Mode Fault Error Detection Enable)

The MODFEN bit enables or disables the detection of mode fault error (refer to section 31.3.9, Error Detection). In addition, the RSPI determines the I/O direction of the SSLA0 to SSLA3 pins based on combinations of the MODFEN and MSTR bits (refer to section 31.3.2, Controlling RSPI Pins).

MSTR Bit (RSPI Master/Slave Mode Select)

The MSTR bit selects master/slave mode of the RSPI. According to MSTR bit settings, the RSPI determines the direction of pins RSPCKA, MOSIA, MISOA, and SSLA0 to SSLA3.

SPEIE Bit (Error Interrupt Enable)

The SPEIE bit enables or disables the generation of error interrupt requests when the RSPI detects a mode fault error or underrun error and sets the SPSR.MODF flag to 1, when the RSPI detects an overrun error and sets the SPSR.OVRF flag to 1, or when the RSPI detects a parity error and sets the SPSR.PERF flag to 1 (refer to section 31.3.9, Error Detection).

SPTIE Bit (Transmit Buffer Empty Interrupt Enable)

The SPTIE bit enables or disables the generation of transmit buffer empty interrupt requests when the RSPI detects when the transmit buffer is empty.
A transmit buffer empty interrupt request when transmission starts is generated by setting the SPE and SPTIE bits to 1 at the same time or by setting the SPE bit to 1 after setting the SPTIE bit to 1.
Note that a transmit buffer interrupt is generated when the SPTIE bit is 1 even if the RSPI function is disabled (the SPTIE bit is changed to 0).

SPE Bit (RSPI Function Enable)

The SPE bit enables or disables the RSPI function.
When the SPSR.MODF flag is 1, the SPE bit cannot be set to 1. For details, refer to section 31.3.9, Error Detection.
Setting the SPE bit to 0 disables the RSPI function, and initializes a part of the module function. For details, refer to section 31.3.10, Initializing RSPI. Furthermore, a transmit buffer empty interrupt request is generated by the state of the SPE bit changing from 0 to 1 or from 1 to 0.

SPRIE Bit (Receive Buffer Full Interrupt Enable)

If the RSPI has detected a receive buffer full write after completion of a serial transfer, the SPRIE bit enables or disables the generation of a receive buffer full interrupt request.

31.2.2 RSPI Slave Select Polarity Register (SSLP)

Address(es): RSPI0.SSLP 0008 8381h

	b7	b6	b5	b4	b3	b2	b1	b0
	—	—	—	—	SSL3P	SSL2P	SSL1P	SSL0P
Value after reset:	0	0	0	0	0	0	0	0

Bit	Symbol	Bit Name	Description	R/W
b0	SSL0P	SSL0 Signal Polarity Setting	0: SSL0 signal is active low 1: SSL0 signal is active high	R/W
b1	SSL1P	SSL1 Signal Polarity Setting	0: SSL1 signal is active low 1: SSL1 signal is active high	R/W
b2	SSL2P	SSL2 Signal Polarity Setting	0: SSL2 signal is active low 1: SSL2 signal is active high	R/W
b3	SSL3P	SSL3 Signal Polarity Setting	0: SSL3 signal is active low 1: SSL3 signal is active high	R/W
b7 to b4	—	Reserved	These bits are read as 0. The write value should be 0.	R/W

Note: Do not change the SSLP register while the SPCR.SPE bit is 1.

31.2.3 RSPI Pin Control Register (SPPCR)

Address(es): RSPI0.SPPCR 0008 8382h

	b7	b6	b5	b4	b3	b2	b1	b0
	—	—	MOIFE	MOIFV	—	—	SPLP2	SPLP
Value after reset:	0	0	0	0	0	0	0	0

Bit	Symbol	Bit Name	Description	R/W
b0	SPLP	RSPI Loopback	0: Normal mode 1: Loopback mode (data is inverted for transmission)	R/W
b1	SPLP2	RSPI Loopback 2	0: Normal mode 1: Loopback mode (data is not inverted for transmission)	R/W
b3, b2	—	Reserved	These bits are read as 0. The write value should be 0.	R/W
b4	MOIFV	MOSI Idle Fixed Value	0: The level output on the MOSIA pin during MOSI idling corresponds to low 1: The level output on the MOSIA pin during MOSI idling corresponds to high	R/W
b5	MOIFE	MOSI Idle Value Fixing Enable	0: MOSI output value equals final data from previous transfer 1: MOSI output value equals the value set in the MOIFV bit	R/W
b7, b6	—	Reserved	These bits are read as 0. The write value should be 0.	R/W

Note: Do not change the SPPCR register while the SPCR.SPE bit is 1.

SPLP Bit (RSPI Loopback)

The SPLP bit selects the mode of the RSPI pins.

When the SPLP bit is set to 1, the RSPI shuts off the path between the MISOA pin and the shift register if the SPCR.MSTR bit is 1, and between the MOSIA pin and the shift register if the SPCR.MSTR bit is 0, and connects (inverts) the input path and output path for the shift register (loopback mode).

SPLP2 Bit (RSPI Loopback 2)

The SPLP2 bit selects the mode of the RSPI pins.

When the SPLP2 bit is set to 1, the RSPI shuts off the path between the MISOA pin and the shift register if the SPCR.MSTR bit is 1, and between the MOSIA pin and the shift register if the SPCR.MSTR bit is 0, and connects the input path and output path for the shift register (loopback mode).

MOIFV Bit (MOSI Idle Fixed Value)

If the MOIFE bit is 1 in master mode, the MOIFV bit determines the MOSIA pin output value during the SSL negation period (including the SSL retention period during a burst transfer).

MOIFE Bit (MOSI Idle Value Fixing Enable)

The MOIFE bit fixes the MOSIA output value when the RSPI in master mode is in an SSL negation period (including the SSL retention period during a burst transfer). When the MOIFE bit is 0, the RSPI outputs the last data from the previous serial transfer during the SSL negation period to the MOSIA pin. When the MOIFE bit is 1, the RSPI outputs the fixed value set in the MOIFV bit to the MOSIA pin.

31.2.4 RSPI Status Register (SPSR)

Address(es): RSPI0.SPSR 0008 8383h

	b7	b6	b5	b4	b3	b2	b1	b0
	SPRF	—	SPTEF	UDRF	PERF	MODF	IDLNF	OVRF
Value after reset:	0	0	1	0	0	0	0	0

Bit	Symbol	Bit Name	Description	R/W
b0	OVRF	Overrun Error Flag	0: No overrun error occurs 1: An overrun error occurs	R/(W) *1
b1	IDLNF	Idle Flag	0: RSPI is in the idle state 1: RSPI is in the transfer state	R
b2	MODF	Mode Fault Error Flag	0: Neither a mode fault error nor an underrun error occurs 1: A mode fault error or an underrun error occurs	R/(W) *1
b3	PERF	Parity Error Flag	0: No parity error occurs 1: A parity error occurs	R/(W) *1
b4	UDRF	Underrun Error Flag	This flag is used with the MODF flag to check the state in terms of mode fault errors and underrun errors. b4 b2 0 0: Neither a mode fault error nor an underrun error occurs 0 1: A mode fault error occurs 1 1: An underrun error occurs	R/(W) *1, *2
b5	SPTEF	Transmit Buffer Empty Flag	0: Transmit buffer has valid data 1: Transmit buffer has no valid data	R*3
b6	—	Reserved	This bit is read as 0. The write value should be 0.	R/W
b7	SPRF	Receive Buffer Full Flag	0: Receive buffer has no valid data 1: Receive buffer has valid data	R*3

Note 1. Only 0 can be written to clear the flag after reading 1.
Note 2. Clear the MODF and UDRF flags at the same time.
Note 3. The write value should be 1.

OVRF Flag (Overrun Error Flag)

The OVRF flag indicates the occurrence of an overrun error. In master mode (when the SPCR.MSTR bit is 1) and when the RSPCK clock auto-stop function is enabled (the SPCR2.SCKASE bit is 1), an overrun error does not occur; accordingly this flag does not become 1. For details, refer to section 31.3.9.1, Overrun Error.

[Setting condition]

- When the next data reception ends while the SPCR.TXMD bit is 0 and the receive buffer is full.

[Clearing condition]

- When the SPSR register is read while the OVRF flag is 1, and then 0 is written to the OVRF flag.

IDLNF Flag (Idle Flag)

The IDLNF flag indicates the transfer status of the RSPI.

[Setting condition]

Master mode

- When both of the conditions in master mode under the [Clearing condition] below are not satisfied.

Slave mode

- When the SPCR.SPE bit is set to 1 (enables the RSPI function).

[Clearing condition]

Master mode

- When the SPCR.SPE bit is set to 0 (disables the RSPI function)
- When all of the following conditions are satisfied.
  1. The transmit buffer is empty (the SPTEF flag is 1)
  2. The SPSSR.SPCP[2:0] bits are 000b
  3. The transmission of the last bit has been completed and the time specified by the SSLND.SLNDL[2:0] and SPND.SPNDL[2:0] bits has elapsed

Slave mode

- When the SPCR.SPE bit is set to 0 (disables the RSPI function).

MODF Flag (Mode Fault Error Flag)

Indicates the occurrence of a mode fault error or an underrun error. The UDRF flag indicates whether the error is a mode fault error or an underrun error.

[Setting condition]

Multi-master mode

- When the input level of the SSLAi pin changes to the active level while the SPCR.MSTR bit is 1 (master mode) and the SPCR.MODFEN bit is 1 (mode fault error detection is enabled), the RSPI detects a mode fault error.

Slave mode

- When the SSLAi pin is negated before the RSPCK cycle necessary for data transfer ends while the SPCR.MSTR bit is 0 (slave mode) and the SPCR.MODFEN bit is 1 (mode fault error detection is enabled), the RSPI detects a mode fault error.
- When the serial transfer starts while the SPCR.SPE bit is 1 (enables the RSPI function) and the transmit data are not ready for output, the RSPI detects an underrun error.

The active level of the SSLAi signal is determined by the SSLP.SSLiP bit (SSLi signal polarity setting bit).

[Clearing condition]

- When the SPSR register is read while the MODF flag is 1, and then 0 is written to the MODF flag.

PERF Flag (Parity Error Flag)

Indicates the occurrence of a parity error.

[Setting condition]

- When a data reception ends while the SPCR.TXMD bit is 0 and the SPCR2.SPPE bit is 1, the RSPI detects a parity error.

[Clearing condition]

- When the SPSR register is read while the PERF flag is 1, and then 0 is written to the PERF flag.

UDRF Flag (Underrun Error Flag)

Indicates the occurrence of an underrun error. When this flag becomes 1, the MODF flag becomes 1 too. When the MODF flag is 1 and this flag is 0, the error is a mode fault error.

[Setting condition]

- When the serial transfer starts while the SPCR.MSTR bit is 0 (slave mode), the SPCR.SPE bit is 1 (enables the RSPI function), and the transmit data are not ready for output, the RSPI detects an underrun error

[Clearing condition]

- When 0 is written to the UDRF flag after reading the SPSR register while the UDRF flag is 1

SPTEF Flag (Transmit Buffer Empty Flag)

Indicates whether the transmit buffer (SPTX) in the RSPI data register has valid data.

[Setting condition]

- When the SPCR.SPE bit is set to 0 (disables the RSPI function).
- When the number of frames of transmit data specified by the SPDCR.SPFC[1:0] bits have been transferred from the transmit buffer to the shift register.

[Clearing condition]

- When the number of frames of transmit data specified by the SPDCR.SPFC[1:0] bits is written to the SPDR register.

The SPDR register can be set only when the SPTEF flag is 1. The data in the transmit buffer is not updated when the SPDR register is set while the SPTEF flag is 0.

SPRF Flag (Receive Buffer Full Flag)

Indicates whether the receive buffer (SPRX) in the RSPI data register has valid data.

[Setting condition]

- When the number of frames of receive data specified by the SPDCR.SPFC[1:0] bits is transferred from shift register to the receive buffer (SPRX) while the SPCR.TXMD bit is 0 (full duplex) and the SPRF flag is 0.
  Note that the SPRF flag does not become 1 when the OVRF flag is 1.

[Clearing condition]

- When all of the received data are read from the SPDR register.

31.2.5 RSPI Data Register (SPDR)

- When accessing in longword size

Address(es): RSPI0.SPDR 0008 8384h

	b31	b30	b29	b28	b27	b26	b25	b24	b23	b22	b21	b20	b19	b18	b17	b16
Value after reset:	0	0	0	0	0	0	0	0	0	0	0	0	0	0	0	0

	b15	b14	b13	b12	b11	b10	b9	b8	b7	b6	b5	b4	b3	b2	b1	b0
Value after reset:	0	0	0	0	0	0	0	0	0	0	0	0	0	0	0	0

- When accessing in word size

Address(es): RSPI0.SPDR.H 0008 8384h

	b15	b14	b13	b12	b11	b10	b9	b8	b7	b6	b5	b4	b3	b2	b1	b0
	H															
Value after reset:	0	0	0	0	0	0	0	0	0	0	0	0	0	0	0	0

The SPDR register is the interface with the buffers that hold data for transmission and reception by the RSPI.
When accessing in longwords (the SPLW bit is 1), access the SPDR register in 32-bit units.
When accessing in words (the SPLW bit is 0), access the SPDR.H register in 16-bit units.
The transmit buffer (SPTX) and receive buffer (SPRX) are independent but are both mapped to the SPDR register.
Figure 31.2 shows the Configuration of the SPDR Register.

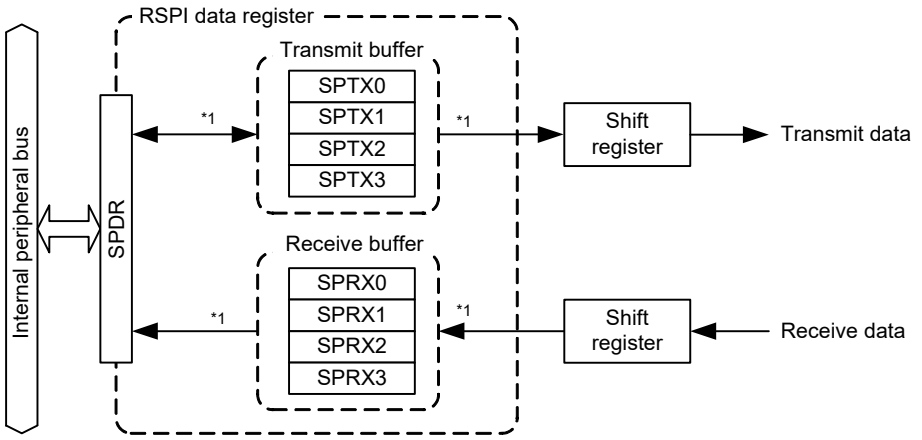

Note 1. The destination buffer and stage for access is automatically switched by hardware.

Figure 31.2 Configuration of the SPDR Register

The transmit and receive buffers each have four stages. The number of stages to be used is selectable by the number of frames specification bits in the RSPI data control register (SPDCR.SPFC[1:0]). The eight stages of the buffer are all

mapped to the single address of the SPDR register.
Data written to the SPDR register are written to a transmit-buffer stage (SPTXn) (n = 0 to 3) and then transmitted from the buffer. The receive buffer holds received data on completion of reception. The receive buffer is not updated if an overrun is generated.
Furthermore, if the data length is other than 32 bits, bits not referred to in SPTXn (n = 0 to 3) are stored in the corresponding bits in SPRXn. For example, if the data length is 9 bits, received data are stored in the SPRXn[8:0] bits and the SPTXn[31:9] bits are stored in the SPRXn[31:9] bits.

(1) Bus Interface

The SPDR register is the interface with 32-bit wide transmit and receive buffers, each of which has four stages, for a total of 32 bytes. In other words, the 32 bytes are mapped to the 4-byte address space for the SPDR register. Furthermore, the unit of access for the SPDR register is selected by the SPDCR.SPLW bit.
Data for transmission should be flush with the LSB end of the register. Received data are stored flush with the LSB end.
Operations involved in writing to and reading from the SPDR register are described below.

(a) Writing

Data written to the SPDR register are written to a transmit buffer (SPTXn). This is not influenced by the value of the SPDCR.SPRDTD bit unlike when reading from the SPDR register.
The transmit buffer includes a transmit buffer write pointer which is automatically updated to indicate the next stage each time data are written to the SPDR register.
Figure 31.3 shows the configuration of the bus interface with the transmit buffer in the case of writing to the SPDR register.

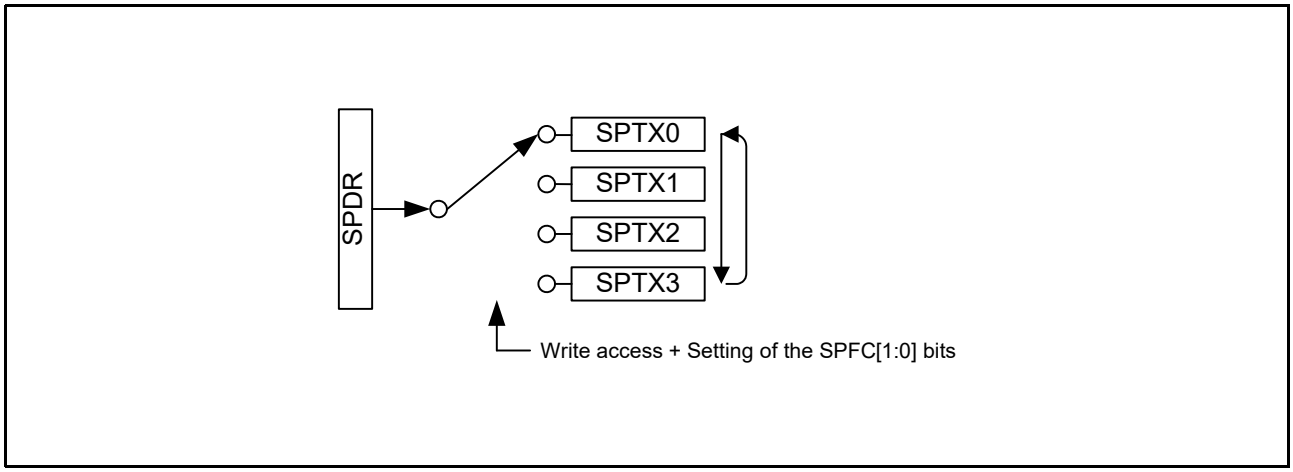

Figure 31.3 Configuration of the SPDR Register (Writing)

The sequence for switching the transmit buffer write pointer differs with the setting of the number of frames specification bits in the RSPI data control register (SPDCR.SPFC[1:0]).

- Settings of the SPFC[1:0] bits and sequence of switching the pointer among SPTX0 to SPTX3.
  When the SPFC[1:0] bits are 00b: SPTX0 → SPTX0 → SPTX0 → …
  When the SPFC[1:0] bits are 01b: SPTX0 → SPTX1 → SPTX0 → SPTX1 → …
  When the SPFC[1:0] bits are 10b: SPTX0 → SPTX1 → SPTX2 → SPTX0 → SPTX1 → …
  When the SPFC[1:0] bits are 11b: SPTX0 → SPTX1 → SPTX2 → SPTX3 → SPTX0 → SPTX1 → …

When 1 is written to the RSPI function enable bit in the RSPI control register (SPCR.SPE) while the bit's current value is 0, SPTX0 will be the destination the next time writing proceeds.
When writing to the transmit buffer (SPTXn) after generation of the transmit buffer empty interrupt (after the

SPSR.SPTEF flag becomes 1), write the number of frames set by the number of frames specification bits (SPFC[1:0]) in the RSPI data control register (SPDCR). Even if the number of frames is written to the transmit buffer (SPTXn), the value of the buffer is not updated after completion of the writing and before generation of the next transmit buffer empty interrupt (while the SPSR.SPTEF flag is 0).

(b) Reading

The SPDR register can be read to read the value of a receive buffer (SPRXn) or a transmit buffer (SPTXn). The setting of the RSPI receive/transmit data select bit in the RSPI data control register (SPDCR.SPRDTD) selects whether reading is of the receive or transmit buffer.
The sequence of reading the SPDR register is controlled by independent pointers, receive buffer read pointer and transmit buffer read pointer.
Figure 31.4 shows the configuration of the bus interface with the receive and transmit buffers in the case of reading from the SPDR register.

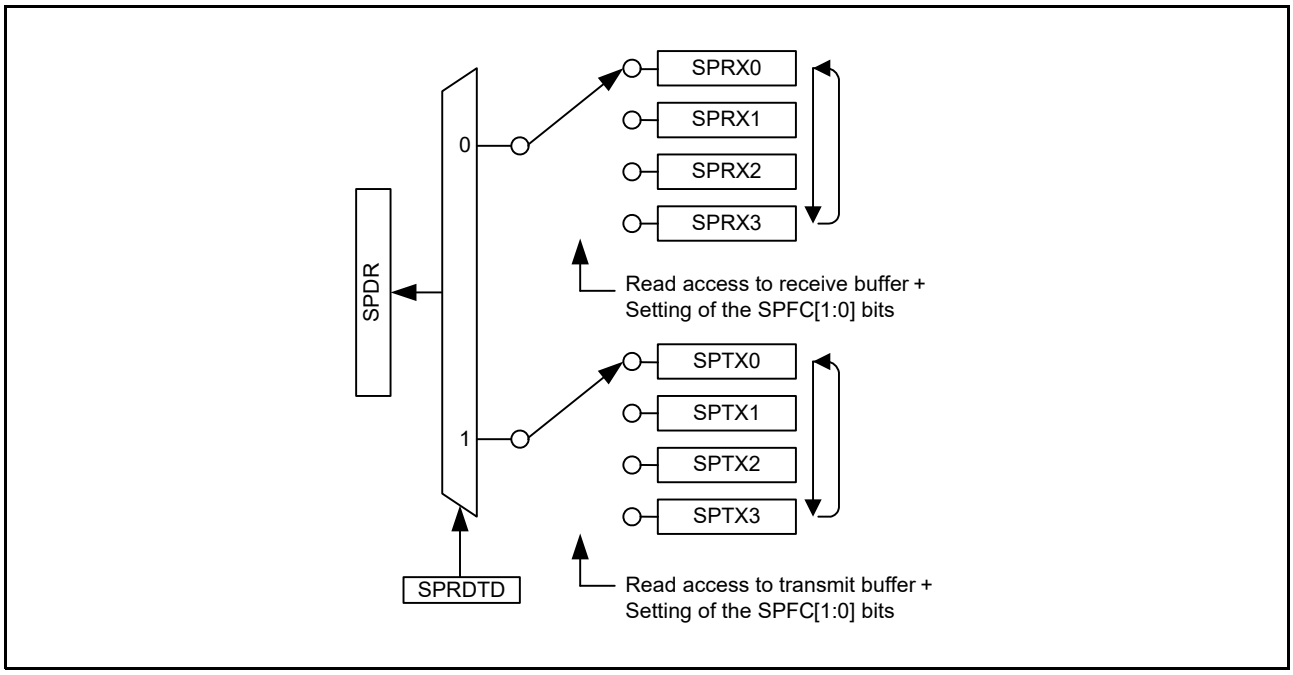

Figure 31.4 Configuration of the SPDR Register (Reading)

Reading the receive buffer switches the receive buffer read pointer to the next buffer automatically.
The sequence of switching the receive buffer read pointer is the same as that for the transmit buffer write pointer.
However, when 1 is written to the RSPI function enable bit in the RSPI control register (SPCR.SPE) while the bit's current value is 0, SPRX0 will be indicated by the buffer read pointer the next time reading proceeds.
The transmit buffer read pointer is updated when writing to the SPDR register, and not updated when reading from the transmit buffer. When reading from the transmit buffer, the value most recently written to the SPDR register is read.
However, after generation of the transmit buffer empty interrupt, the values read from the transmit buffer are all 0 in the interval after completion of writing the number of frames of data specified in the number of frames specification bits (SPDCR.SPFC[1:0]) and before generation of the next buffer empty interrupt (while the SPSR.SPTEF flag is 0).

31.2.6 RSPI Sequence Control Register (SPSCR)

Address(es): RSPI0.SPSCR 0008 8388h

	b7	b6	b5	b4	b3	b2	b1	b0
	—	—	—	—	—	SPSLN[2:0]		
Value after reset:	0	0	0	0	0	0	0	0

Bit	Symbol	Bit Name	Description	R/W
b2 to b0	SPSLN[2:0]	RSPI Sequence Length Specification	b2 b0 Sequence Length — Referenced SPCMD0 to SPCMD7 registers (No.) 0 0 0: 1 — 0→0→… 0 0 1: 2 — 0→1→0→… 0 1 0: 3 — 0→1→2→0→… 0 1 1: 4 — 0→1→2→3→0→… 1 0 0: 5 — 0→1→2→3→4→0→… 1 0 1: 6 — 0→1→2→3→4→5→0→… 1 1 0: 7 — 0→1→2→3→4→5→6→0→… 1 1 1: 8 — 0→1→2→3→4→5→6→7→0→… The order in which the SPCMD0 to SPCMD7 registers are to be referenced is changed according to the sequence length that is set in these bits. The relationship among the setting of these bits, sequence length, and the SPCMD0 to SPCMD7 registers referenced by the RSPI is shown above. However, the RSPI in slave mode references the SPCMD0 register.	R/W
b7 to b3	—	Reserved	These bits are read as 0. The write value should be 0.	R/W

The SPSCR register sets the sequence length when the RSPI operates in master mode. When changing the SPSCR.SPSLN[2:0] bits while both the SPCR.MSTR and SPCR.SPE bits are 1, the bits should be changed while the SPSR.IDLNF flag is 0.

SPSLN[2:0] Bits (RSPI Sequence Length Specification)

The SPSLN[2:0] bits specify a sequence length when the RSPI in master mode performs sequential operations. The RSPI in master mode changes the SPCMD0 to SPCMD7 registers to be referenced and the order in which they are referenced according to the sequence length that is set in the SPSLN[2:0] bits.
In slave mode, the SPCMD0 register is referred.

31.2.7 RSPI Sequence Status Register (SPSSR)

Address(es): RSPI0.SPSSR 0008 8389h

	b7	b6	b5	b4	b3	b2	b1	b0
	—	SPECM[2:0]			—	SPCP[2:0]		
Value after reset:	0	0	0	0	0	0	0	0

Bit	Symbol	Bit Name	Description	R/W
b2 to b0	SPCP[2:0]	RSPI Command Pointer	b2 b0 0 0 0: SPCMD0 0 0 1: SPCMD1 0 1 0: SPCMD2 0 1 1: SPCMD3 1 0 0: SPCMD4 1 0 1: SPCMD5 1 1 0: SPCMD6 1 1 1: SPCMD7	R
b3	—	Reserved	This bit is read as 0.	R
b6 to b4	SPECM[2:0]	RSPI Error Command	b6 b4 0 0 0: SPCMD0 0 0 1: SPCMD1 0 1 0: SPCMD2 0 1 1: SPCMD3 1 0 0: SPCMD4 1 0 1: SPCMD5 1 1 0: SPCMD6 1 1 1: SPCMD7	R
b7	—	Reserved	This bit is read as 0.	R

The SPSSR register indicates the sequence control status when the RSPI operates in master mode.
Any writing to the SPSSR register is ignored.

SPCP[2:0] Bits (RSPI Command Pointer)

The SPCP[2:0] bits indicate the SPCMDm register that is currently pointed to by the pointer during sequence control by the RSPI.
For the RSPI's sequence control, refer to section 31.3.11.1, Master Mode Operation.

SPECM[2:0] Bits (RSPI Error Command)

The SPECM[2:0] bits indicate the SPCMDm register that is specified by the SPCP[2:0] bits when an error is detected during sequence control by the RSPI. The RSPI updates the SPECM[2:0] bits only when an error is detected. If both the SPSR.OVRF and SPSR.MODF flags are 0 and there is no error, the values of the SPECM[2:0] bits have no meaning.
For the RSPI's error detection function, refer to section 31.3.9, Error Detection. For the RSPI's sequence control, refer to section 31.3.11.1, Master Mode Operation.

31.2.8 RSPI Bit Rate Register (SPBR)

Address(es): RSPI0.SPBR 0008 838Ah

	b7	b6	b5	b4	b3	b2	b1	b0
Value after reset:	1	1	1	1	1	1	1	1

The SPBR register sets the bit rate in master mode. Do not change the SPBR register while both the SPCR.MSTR and SPCR.SPE bits are 1.

When the RSPI is used in slave mode, the bit rate depends on the bit rate of the input clock (bit rate satisfying the electrical characteristics should be used) regardless of the settings of the SPBR register and the SPCMDm.BRDV[1:0] bits (bit rate division setting bits).
The bit rate is determined by combinations of the SPBR register setting and the SPCMDm.BRDV[1:0] bit setting. The equation for calculating the bit rate is given below. In the equation, n denotes the SPBR register setting (0, 1, 2, …, 255), and N denotes the BRDV[1:0] bit setting (0, 1, 2, 3).

$$\text{Bit rate} = \frac{f(PCLK)}{2 \times (n+1) \times 2^N}$$

Table 31.3 lists examples of the relationship among the SPBR register settings, the BRDV[1:0] bit settings, and bit rates.
Use the bit rate that meets electrical characteristics based on the AC specifications of the target device.

Table 31.3 Relationship among SPBR Settings, BRDV[1:0] Settings, and Bit Rates

SPBR (n)	BRDV[1:0] Bits (N)	Division Ratio	Bit Rate PCLK = 32 MHz
0	0	2	16.0 Mbps
1	0	4	8.00 Mbps
2	0	6	5.33 Mbps
3	0	8	4.00 Mbps
4	0	10	3.20 Mbps
5	0	12	2.67 Mbps
5	1	24	1.33 Mbps
5	2	48	667 kbps
5	3	96	333 kbps
255	3	4096	7.81 kbps

31.2.9 RSPI Data Control Register (SPDCR)

Address(es): RSPI0.SPDCR 0008 838Bh

	b7	b6	b5	b4	b3	b2	b1	b0
	—	—	SPLW	SPRDTD	—	—	SPFC[1:0]	
Value after reset:	0	0	0	0	0	0	0	0

Bit	Symbol	Bit Name	Description	R/W
b1, b0	SPFC[1:0]	Number of Frames Specification	b1 b0 0 0: 1 frame 0 1: 2 frames 1 0: 3 frames 1 1: 4 frames	R/W
b3, b2	—	Reserved	These bits are read as 0. The write value should be 0.	R/W
b4	SPRDTD	RSPI Receive/Transmit Data Select	0: The SPDR values are read from the receive buffer 1: The SPDR values are read from the transmit buffer (but only if the transmit buffer is empty)	R/W
b5	SPLW	RSPI Longword Access/ Word Access Specification	0: The SPDR register is accessed in words 1: The SPDR register is accessed in longwords	R/W
b7, b6	—	Reserved	These bits are read as 0. The write value should be 0.	R/W

Up to four frames can be transmitted or received in one round of transmission or reception activation. The amount of data in each transfer is controlled by the combination of the SPCMDm.SPB[3:0] bits, the SPSCR.SPSLN[2:0] bits, and the SPDCR.SPFC[1:0] bits.
When changing the SPDCR.SPFC[1:0] bits while the SPCR.SPE bit is 1, the bits should be changed while the SPSR.IDLNF flag is 0.

SPFC[1:0] Bits (Number of Frames Specification)

The SPFC[1:0] bits specify the number of frames that can be stored in the SPDR register (per transfer activation). Up to four frames can be transmitted or received in one round of transmission or reception, and the amount of data is determined by the combination of the SPSCR.SPSLN[2:0] bits, and the SPDCR.SPFC[1:0] bits. Furthermore, the setting of the SPFC[1:0] bits adjusts the number of frames for generation of receive buffer full interrupt, and start of transmission or generation of transmit buffer empty interrupts.
When the number of frames of transmit data specified by SPFC[1:0] bits is written to the SPDR register, the SPSR.SPTEF flag becomes 0 and transmission starts. Then, when the specified number of frames of transmit data has been transferred to the shift register, the SPTEF flag becomes 1 and the RSPI transmit buffer empty interrupt is generated.
When the number of frames specified by the SPFC[1:0] bits are received, the SPSR.SPRF flag becomes 1 and the receive buffer full interrupt is generated.
Table 31.4 lists the frame configurations that can be stored in the SPDR register and examples of combinations of settings for transmission and reception. Do not select the combinations of settings other than those shown in the examples.

Table 31.4 Settable Combinations of SPSLN[2:0] Bits and SPFC[1:0] Bits

Setting	SPSLN[2:0]	SPFC[1:0]	Number of Frames in a Single Sequence	Number of Frames at which Transmit Buffer or Receive Buffer Status Becomes “Has Valid Data”
1-1	000b	00b	1	1
1-2	000b	01b	2	2
1-3	000b	10b	3	3
1-4	000b	11b	4	4
2-1	001b	01b	2	2
2-2	001b	11b	4	4
3	010b	10b	3	3
4	011b	11b	4	4
5	100b	00b	5	1
6	101b	00b	6	1
7	110b	00b	7	1
8	111b	00b	8	1

SPRDTD Bit (RSPI Receive/Transmit Data Select)

The SPRDTD bit selects whether the SPDR register reads values from the receive buffer or from the transmit buffer. If reading is from the transmit buffer, the value written to the SPDR register immediately beforehand is read.
When reading the transmit buffer, do so before writing of the number of frames set in the SPFC[1:0] bits is finished and after generation of the transmit buffer empty interrupt (While the SPSR.SPTEF flag is 1).
For details, refer to section 31.2.5, RSPI Data Register (SPDR).

SPLW Bit (RSPI Longword Access/Word Access Specification)

The SPLW bit specifies the access width for the SPDR register. Access to the SPDR register in words when the SPLW bit is 0 and in longwords when the SPLW bit is 1.
Also, when the SPLW bit is 0, set the SPCMDm.SPB[3:0] bits (RSPI data length setting bits) to 8 to 16 bits. Do not select 20, 24, or 32 bits.

31.2.10 RSPI Clock Delay Register (SPCKD)

Address(es): RSPI0.SPCKD 0008 838Ch

	b7	b6	b5	b4	b3	b2	b1	b0
	—	—	—	—	—	SCKDL[2:0]		
Value after reset:	0	0	0	0	0	0	0	0

Bit	Symbol	Bit Name	Description	R/W
b2 to b0	SCKDL[2:0]	RSPCK Delay Setting	b2 b0 0 0 0: 1 RSPCK 0 0 1: 2 RSPCK 0 1 0: 3 RSPCK 0 1 1: 4 RSPCK 1 0 0: 5 RSPCK 1 0 1: 6 RSPCK 1 1 0: 7 RSPCK 1 1 1: 8 RSPCK	R/W
b7 to b3	—	Reserved	These bits are read as 0. The write value should be 0.	R/W

The SPCKD register sets a period from the beginning of SSLAi signal assertion to RSPCK oscillation (RSPCK delay) when the SPCMDm.SCKDEN bit is 1. Do not change the SPCKD register while both the SPCR.MSTR and SPCR.SPE bits are 1.

SCKDL[2:0] Bits (RSPCK Delay Setting)

The SCKDL[2:0] bits set an RSPCK delay value when the SPCMDm.SCKDEN bit is 1.
When using the RSPI in slave mode, set the SCKDL[2:0] bits to 000b.

31.2.11 RSPI Slave Select Negation Delay Register (SSLND)

Address(es): RSPI0.SSLND 0008 838Dh

	b7	b6	b5	b4	b3	b2	b1	b0
	—	—	—	—	—	SLNDL[2:0]		
Value after reset:	0	0	0	0	0	0	0	0

Bit	Symbol	Bit Name	Description	R/W
b2 to b0	SLNDL[2:0]	SSL Negation Delay Setting	b2 b0 0 0 0: 1 RSPCK 0 0 1: 2 RSPCK 0 1 0: 3 RSPCK 0 1 1: 4 RSPCK 1 0 0: 5 RSPCK 1 0 1: 6 RSPCK 1 1 0: 7 RSPCK 1 1 1: 8 RSPCK	R/W
b7 to b3	—	Reserved	These bits are read as 0. The write value should be 0.	R/W

The SSLND register sets a period (SSL negation delay) from the transmission of a final RSPCK edge to the negation of the SSLAi signal during a serial transfer by the RSPI in master mode. Do not change the SSLND register while both the SPCR.MSTR and SPCR.SPE bits are 1.

SLNDL[2:0] Bits (SSL Negation Delay Setting)

The SLNDL[2:0] bits set an SSL negation delay value when the SPCMDm.SLNDEN bit is 1.
When using the RSPI in slave mode, set the SLNDL[2:0] bits to 000b.

31.2.12 RSPI Next-Access Delay Register (SPND)

Address(es): RSPI0.SPND 0008 838Eh

	b7	b6	b5	b4	b3	b2	b1	b0
	—	—	—	—	—	SPNDL[2:0]		
Value after reset:	0	0	0	0	0	0	0	0

Bit	Symbol	Bit Name	Description	R/W
b2 to b0	SPNDL[2:0]	RSPI Next-Access Delay Setting	b2 b0 0 0 0: 1 RSPCK + 2 PCLK 0 0 1: 2 RSPCK + 2 PCLK 0 1 0: 3 RSPCK + 2 PCLK 0 1 1: 4 RSPCK + 2 PCLK 1 0 0: 5 RSPCK + 2 PCLK 1 0 1: 6 RSPCK + 2 PCLK 1 1 0: 7 RSPCK + 2 PCLK 1 1 1: 8 RSPCK + 2 PCLK	R/W
b7 to b3	—	Reserved	These bits are read as 0. The write value should be 0.	R/W

SPND sets a non-active period (next-access delay) of the SSLAi signal after termination of a serial transfer when the SPCMDm.SPNDEN bit is 1. Do not change the SPND register while both the SPCR.MSTR and SPCR.SPE bits are 1.

SPNDL[2:0] Bits (RSPI Next-Access Delay Setting)

The SPNDL[2:0] bits set a next-access delay when the SPCMDm.SPNDEN bit is 1.
When using the RSPI in slave mode, set the SPNDL[2:0] bits to 000b.

31.2.13 RSPI Control Register 2 (SPCR2)

Address(es): RSPI0.SPCR2 0008 838Fh

	b7	b6	b5	b4	b3	b2	b1	b0
	—	—	—	SCKASE	PTE	SPIIE	SPOE	SPPE
Value after reset:	0	0	0	0	0	0	0	0

Bit	Symbol	Bit Name	Description	R/W
b0	SPPE	Parity Enable*1	0: Does not add the parity bit to transmit data and does not check the parity bit of receive data 1: Adds the parity bit to transmit data and checks the parity bit of receive data	R/W
b1	SPOE	Parity Mode*1	0: Selects even parity for use in transmission and reception 1: Selects odd parity for use in transmission and reception	R/W
b2	SPIIE	Idle Interrupt Enable	0: Disables the generation of idle interrupt requests 1: Enables the generation of idle interrupt requests	R/W
b3	PTE	Parity Self-Diagnosis	0: Disables the self-diagnosis function of the parity circuit 1: Enables the self-diagnosis function of the parity circuit	R/W
b4	SCKASE	RSPCK Auto-Stop Function Enable*1	0: Disables the RSPCK auto-stop function 1: Enables the RSPCK auto-stop function	R/W
b7 to b5	—	Reserved	These bits are read as 0. The write value should be 0.	R/W

Note 1. Do not change the SPPE, SPOE, and SCKASE bits while the SPCR.SPE bit is 1.

SPPE Bit (Parity Enable)

The SPPE bit enables or disables the parity function.

SPOE Bit (Parity Mode)

The SPOE bit specifies odd or even parity.

When even parity is set, parity bit addition is performed so that the total number of 1-bits in the transmit/receive character plus the parity bit is even. Similarly, when odd parity is set, parity bit addition is performed so that the total number of 1-bits in the transmit/receive character plus the parity bit is odd.

The SPOE bit is valid only when the SPPE bit is 1.

SPIIE Bit (Idle Interrupt Enable)

The SPIIE bit enables or disables the generation of idle interrupt requests when the RSPI being in the idle state is detected and the SPSR.IDLNF flag is set to 0.

PTE Bit (Parity Self-Diagnosis)

The PTE bit enables the self-diagnosis function of the parity circuit in order to check whether the parity function is operating correctly.

SCKASE Bit (RSPCK Auto-Stop Function Enable)

The SCKASE bit enables or disables the RSPCK auto-stop function. When this function is enabled, the RSPCK clock is stopped before an overrun error occurs when data is received in master mode. For details, refer to section 31.3.9.1, Overrun Error.

31.2.14 RSPI Command Register m (SPCMDm) (m = 0 to 7)

Address(es): RSPI0.SPCMD0 0008 8390h, RSPI0.SPCMD1 0008 8392h, RSPI0.SPCMD2 0008 8394h, RSPI0.SPCMD3 0008 8396h, RSPI0.SPCMD4 0008 8398h, RSPI0.SPCMD5 0008 839Ah, RSPI0.SPCMD6 0008 839Ch, RSPI0.SPCMD7 0008 839Eh

	b15	b14	b13	b12	b11	b10	b9	b8	b7	b6	b5	b4	b3	b2	b1	b0
	SCKDEN	SLNDEN	SPNDEN	LSBF	SPB[3:0]				SSLKP	SSLA[2:0]			BRDV[1:0]		CPOL	CPHA
Value after reset:	0	0	0	0	0	1	1	1	0	0	0	0	1	1	0	1

Bit	Symbol	Bit Name	Description	R/W
b0	CPHA	RSPCK Phase Setting	0: Data sampling on odd edge, data variation on even edge 1: Data variation on odd edge, data sampling on even edge	R/W
b1	CPOL	RSPCK Polarity Setting	0: RSPCK is low when idle 1: RSPCK is high when idle	R/W
b3, b2	BRDV[1:0]	Bit Rate Division Setting	b3 b2 0 0: These bits select the base bit rate 0 1: These bits select the base bit rate divided by 2 1 0: These bits select the base bit rate divided by 4 1 1: These bits select the base bit rate divided by 8	R/W
b6 to b4	SSLA[2:0]	SSL Signal Assertion Setting	b6 b4 0 0 0: SSL0 0 0 1: SSL1 0 1 0: SSL2 0 1 1: SSL3 1 x x: Setting prohibited	R/W
b7	SSLKP	SSL Signal Level Keeping	0: Negates all SSL signals upon completion of transfer 1: Keeps the SSL signal level from the end of transfer until the beginning of the next access (burst transfer)	R/W
b11 to b8	SPB[3:0]	RSPI Data Length Setting	b11 b8 0100 to 0111: 8 bits 1 0 0 0: 9 bits 1 0 0 1: 10 bits 1 0 1 0: 11 bits 1 0 1 1: 12 bits 1 1 0 0: 13 bits 1 1 0 1: 14 bits 1 1 1 0: 15 bits 1 1 1 1: 16 bits 0 0 0 0: 20 bits 0 0 0 1: 24 bits 0010, 0011: 32 bits	R/W
b12	LSBF	RSPI LSB First	0: MSB first 1: LSB first	R/W
b13	SPNDEN	RSPI Next-Access Delay Enable	0: A next-access delay of 1 RSPCK + 2 PCLK 1: A next-access delay is equal to the setting of the RSPI next-access delay register (SPND)	R/W
b14	SLNDEN	SSL Negation Delay Setting Enable	0: An SSL negation delay of 1 RSPCK 1: An SSL negation delay is equal to the setting of the RSPI slave select negation delay register (SSLND)	R/W
b15	SCKDEN	RSPCK Delay Setting Enable	0: An RSPCK delay of 1 RSPCK 1: An RSPCK delay is equal to the setting of the RSPI clock delay register (SPCKD)	R/W

x: Don’t care

The SPCMDm register is used to set a transfer format for the RSPI in master mode. Each channel has eight RSPI command registers (SPCMD0 to SPCMD7). Some of the bits in the SPCMD0 register is used to set a transfer mode for the RSPI in slave mode. The RSPI in master mode sequentially references the SPCMDm register according to the settings in the SPSCR.SPSLN[2:0] bits, and executes the serial transfer that is set in the referenced SPCMDm register. SPCMDm register should be set while the transmit buffer is empty (data for the next transfer is not set) and before setting of the data that is to be transmitted when that SPCMDm register is referenced.
An SPCMDm register that is referenced by the RSPI in master mode can be checked by means of the SPSSR.SPCP[2:0] bits. Do not change the SPCMDm register while the SPCR.MSTR bit is 0 and the SPCR.SPE bit is 1.

CPHA Bit (RSPCK Phase Setting)

The CPHA bit sets an RSPCK phase of the RSPI in master mode or slave mode. Data communications between RSPI modules require the same RSPCK phase setting between the modules.

CPOL Bit (RSPCK Polarity Setting)

The CPOL bit sets an RSPCK polarity of the RSPI in master mode or slave mode. Data communications between RSPI modules require the same RSPCK polarity setting between the modules.

BRDV[1:0] Bits (Bit Rate Division Setting)

The BRDV[1:0] bits are used to determine the bit rate. A bit rate is determined by combinations of the settings in the BRDV[1:0] bits and the SPBR register (refer to section 31.2.8, RSPI Bit Rate Register (SPBR)). The settings in the SPBR register determine the base bit rate. The settings in the BRDV[1:0] bits are used to select a bit rate which is obtained by dividing the base bit rate by 1, 2, 4, or 8. In the SPCMDm register, different BRDV[1:0] bit settings can be specified. This enables execution of serial transfers at a different bit rate for each command.

SSLA[2:0] Bits (SSL Signal Assertion Setting)

The SSLA[2:0] bits control the SSLAi signal assertion when the RSPI performs serial transfers in master mode. Setting the SSLA[2:0] bits controls the assertion for the SSLAi signal. When an SSLAi signal is asserted, its polarity is determined by the set value in the corresponding SSLP. When the SSLA[2:0] bits are set to 000b in multi-master mode, serial transfers are performed with all the SSL signals in the negated state (as the SSLA0 pin acts as input).
When using the RSPI in slave mode, set the SSLA[2:0] bits to 000b.

SSLKP Bit (SSL Signal Level Keeping)

When the RSPI in master mode performs a serial transfer, the SSLKP bit specifies whether the SSLAi signal level for the current command is to be kept or negated between the SSL negation timing associated with the current command and the SSL assertion timing associated with the next command.
Setting the SSLKP bit to 1 enables a burst transfer. For details, refer to section 31.3.11.1, Master Mode Operation (4) Burst Transfer.
When using the RSPI in slave mode, the SSLKP bit should be set to 0.

SPB[3:0] Bits (RSPI Data Length Setting)

The SPB[3:0] bits set a transfer data length for the RSPI in master mode or slave mode. When the SPDCR.SPLW bit is 0, set the SPB[3:0] bits to 0100b (8 bits) to 1111b (16 bits).

LSBF Bit (RSPI LSB First)

The LSBF bit sets the data format of the RSPI in master mode or slave mode to MSB first or LSB first.

SPNDEN Bit (RSPI Next-Access Delay Enable)

The SPNDEN bit sets the period from the time the RSPI in master mode terminates a serial transfer and sets the SSLAi signal inactive until the RSPI enables the SSLAi signal assertion for the next access (next-access delay). If the SPNDEN bit is 0, the RSPI sets the next-access delay to 1 RSPCK + 2 PCLK. If the SPNDEN bit is 1, the RSPI inserts a next-access delay in compliance with the SPND setting.
When using the RSPI in slave mode, the SPNDEN bit should be set to 0.

SLNDEN Bit (SSL Negation Delay Setting Enable)

The SLNDEN bit sets the period from the time the RSPI in master mode stops RSPCK oscillation until the RSPI sets the SSLAi signal inactive (SSL negation delay). If the SLNDEN bit is 0, the RSPI sets the SSL negation delay to 1 RSPCK. If the SLNDEN bit is 1, the RSPI negates the SSL signal at an SSL negation delay in compliance with the SSLND setting.
When using the RSPI in slave mode, the SLNDEN bit should be set to 0.

SCKDEN Bit (RSPCK Delay Setting Enable)

The SCKDEN bit sets the period from the point when the RSPI in master mode activates the SSLAi signal until the RSPCK starts oscillation (RSPI clock delay). If the SCKDEN bit is 0, the RSPI sets the RSPCK delay to 1 RSPCK. If the SCKDEN bit is 1, the RSPI starts the oscillation of RSPCK at an RSPCK delay in compliance with the SPCKD setting.
When using the RSPI in slave mode, the SCKDEN bit should be set to 0.

31.3 Operation

In this section, the serial transfer period means a period from the beginning of driving valid data to the fetching of the final valid data.

31.3.1 Overview of RSPI Operations

The RSPI is capable of synchronous serial transfers in slave mode (SPI operation), single-master mode (SPI operation), multi-master mode (SPI operation), slave mode (clock synchronous operation), and master mode (clock synchronous operation). A particular mode of the RSPI can be selected by using the MSTR, MODFEN, and SPMS bits in SPCR. Table 31.5 lists the relationship between RSPI modes and SPCR settings, and a description of each mode.

Table 31.5 Relationship between RSPI Modes and SPCR Settings and Description of Each Mode

	SPI Operation			Clock Synchronous Operation	
Mode	**Slave**	**Single-Master**	**Multi-Master**	**Slave**	**Master**
MSTR bit setting	0	1	1	0	1
MODFEN bit setting	0 or 1	0	1	0	0
SPMS bit setting	0	0	0	1	1
RSPCKA signal	Input	Output	Output/Hi-Z*1	Input	Output
MOSIA signal	Input	Output	Output/Hi-Z*1	Input	Output
MISOA signal	Output/Hi-Z*2	Input	Input	Output	Input
SSLA0 signal	Input	Output	Input	Hi-Z*3	Hi-Z*3
SSLA1 to SSLA3 signals	Hi-Z*3	Output	Output/Hi-Z*1	Hi-Z*3	Hi-Z*3
SSL polarity change function	Supported	Supported	Supported	—	—
Transfer rate	Up to PCLK/6	Up to PCLK/2	Up to PCLK/2	Up to PCLK/6	Up to PCLK/2
Clock source	RSPCK input	On-chip baud rate generator	On-chip baud rate generator	RSPCK input	On-chip baud rate generator
Clock polarity	Two				
Clock phase	Two	Two	Two	One (CPHA = 1)	Two
First transfer bit	MSB/LSB				
Transfer data length	8 to 16, 20, 24, 32 bits				
Burst transfer	Possible (CPHA = 1)	Possible (CPHA = 0,1)	Possible (CPHA = 0,1)	—	—
RSPCK delay control	Not supported	Supported	Supported	Not supported	Supported
SSL negation delay control	Not supported	Supported	Supported	Not supported	Supported
Next-access delay control	Not supported	Supported	Supported	Not supported	Supported
Transfer activation method	SSL input active or RSPCK oscillation	Transmit buffer is written to when a transmit buffer empty interrupt request is generated or the SPTEF flag is 1	Transmit buffer is written to when a transmit buffer empty interrupt request is generated or the SPTEF flag is 1	RSPCK oscillation	Transmit buffer is written to when a transmit buffer empty interrupt request is generated or the SPTEF flag is 1
Sequence control	Not supported	Supported	Supported	Not supported	Supported
Transmit buffer empty detection	Supported				
Receive buffer full detection	Supported*4				
Overrun error detection	Supported*4	Supported*4, *6	Supported*4, *6	Supported*4	Supported*4, *6
Underrun error detection	Supported	Not supported	Not supported	Supported	Not supported
Parity error detection	Supported*4, *5				
Mode fault error detection	Supported (MODFEN = 1)	Not supported	Supported	Not supported	Not supported

Note 1. When SSLA0 is asserted by another master device, the pin becomes Hi-Z.
Note 2. When SSLA0 is negated or the SPCR.SPE bit is 0, the pin becomes Hi-Z.
Note 3. This function is not supported in this mode.
Note 4. When the SPCR.TXMD bit is 1, the detections of receiver buffer full, overrun error, and parity error are not performed.
Note 5. When the SPCR2.SPPE bit is 0, the detection of parity error is not performed.

Note 6. When the SPCR2.SCKASE bit is 1, the detection of overrun error is not performed.

31.3.2 Controlling RSPI Pins

The RSPI in single-master mode (SPI operation) or multi-master mode (SPI operation) determines MOSI signal values during the SSL negation period (including the SSL retention period during a burst transfer) according to MOIFE and MOIFV bit settings in SPPCR, as listed in Table 31.6.

Table 31.6 MOSI Signal Value Determination during SSL Negation Period

MOIFE Bit	MOIFV Bit	MOSIA Signal Value during SSL Negation Period
0	0, 1	Final data from previous transfer
1	0	Low
1	1	High

31.3.3 RSPI System Configuration Examples

31.3.3.1 Single Master/Single Slave (with This MCU Acting as Master)

Figure 31.5 shows a single-master/single-slave RSPI system configuration example when this MCU is used as a master. In the single-master/single-slave configuration, the SSLA0 to SSLA3 output of this MCU (master) are not used. The SSL input of the SPI slave is fixed to the low level, and the SPI slave is maintained in a select state.*1
This MCU (master) drives the RSPCKA and MOSIA. The SPI slave drives the MISO.

Note 1. In the transfer format corresponding to the case where the SPCMDm.CPHA bit is 0, there are slave devices for which the SSL signal cannot be fixed to the active level. In situations where the SSL signal cannot be fixed, the SSLAi output of this MCU should be connected to the SSL input of the slave device.

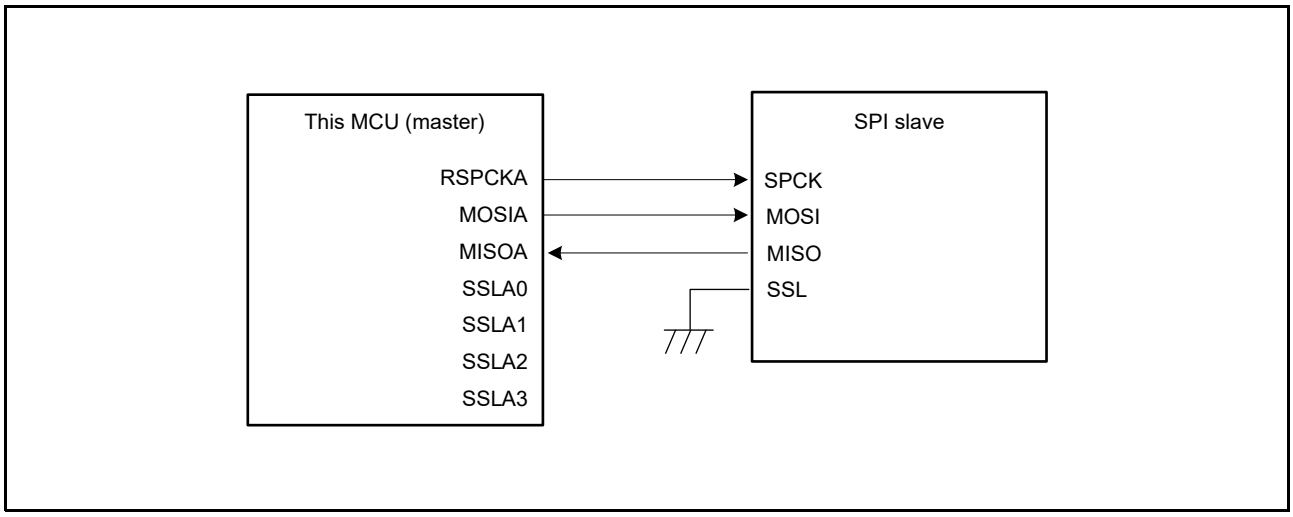

Figure 31.5 Single-Master/Single-Slave Configuration Example (This MCU = Master)

31.3.3.2 Single Master/Single Slave (with This MCU Acting as Slave)

Figure 31.6 shows a single-master/single-slave RSPI system configuration example when this MCU is used as a slave. When this MCU is to operate as a slave, the SSLA0 pin is used as SSL input. The SPI master drives the RSPCK and MOSI. This MCU (slave) drives the MISOA.*1

In the single-slave configuration in which the SPCMDm.CPHA bit is set to 1, the SSLA0 input of this MCU (slave) is fixed to the low level, this MCU (slave) is maintained in a select state, and in this manner it is possible to execute serial transfer (Figure 31.7).

Note 1. When SSLA0 is at the non-active level, the pin state is Hi-Z.

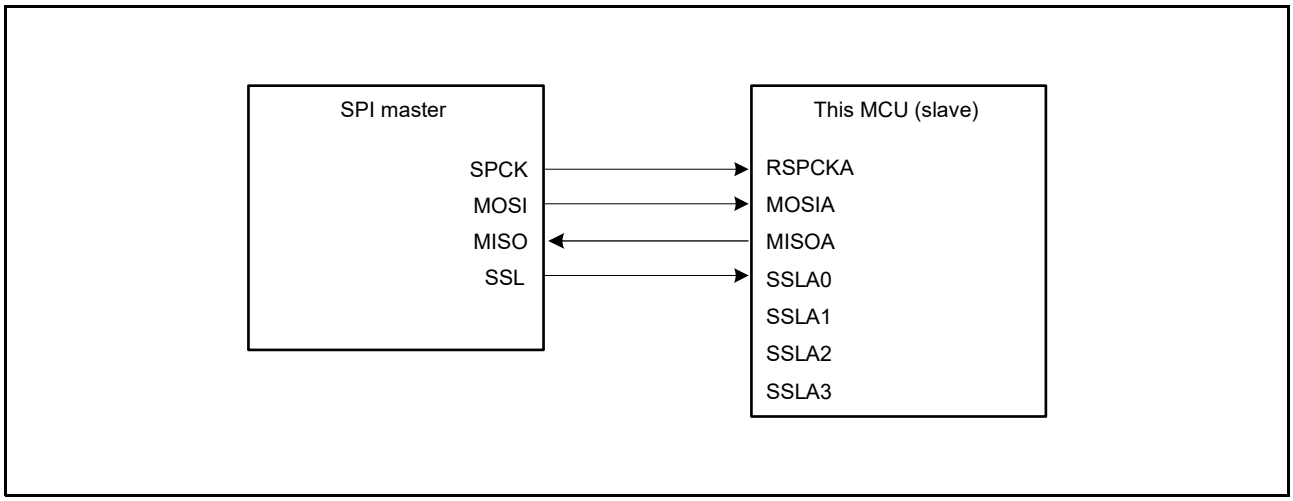

Figure 31.6 Single-Master/Single-Slave Configuration Example (This MCU = Slave, CPHA = 0)

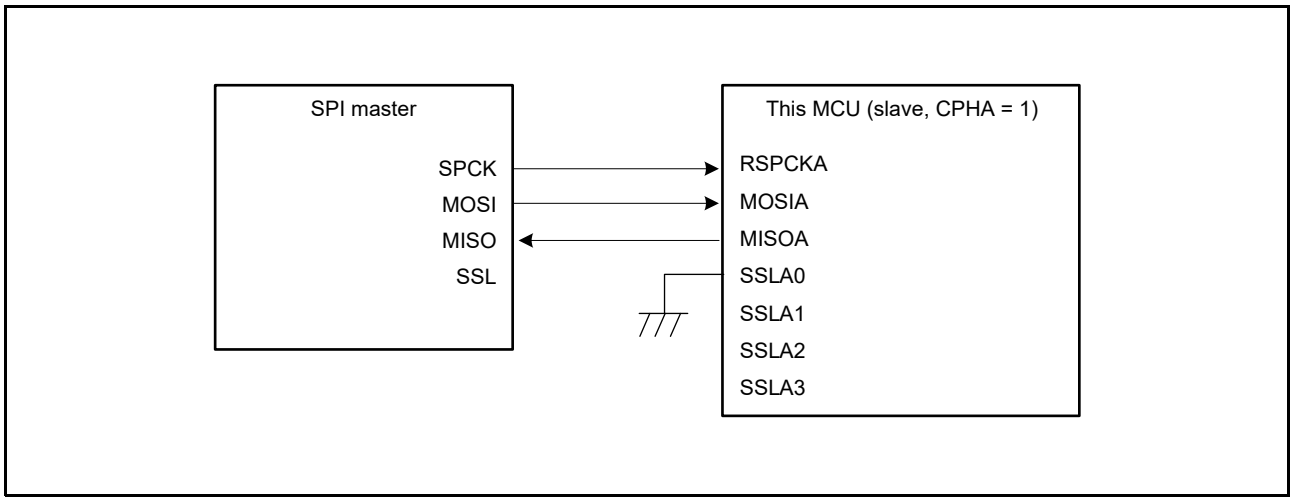

Figure 31.7 Single-Master/Single-Slave Configuration Example (This MCU = Slave, CPHA = 1)

31.3.3.3 Single Master/Multi-Slave (with This MCU Acting as Master)

Figure 31.8 shows a single-master/multi-slave RSPI system configuration example when this MCU is used as a master. In the example of Figure 31.8, the RSPI system is comprised of this MCU (master) and four slaves (SPI slave 0 to SPI slave 3).

The RSPCKA and MOSIA outputs of this MCU (master) are connected to the RSPCK and MOSI inputs of SPI slave 0 to SPI slave 3. The MISO outputs of SPI slave 0 to SPI slave 3 are all connected to the MISOA input of this MCU (master). SSLA0 to SSLA3 outputs of this MCU (master) are connected to the SSL inputs of SPI slave 0 to SPI slave 3, respectively.

This MCU (master) drives RSPCKA, MOSIA, and SSLA0 to SSLA3. Of the SPI slave 0 to SPI slave 3, the slave that receives low-level input into the SSL input drives MISO.

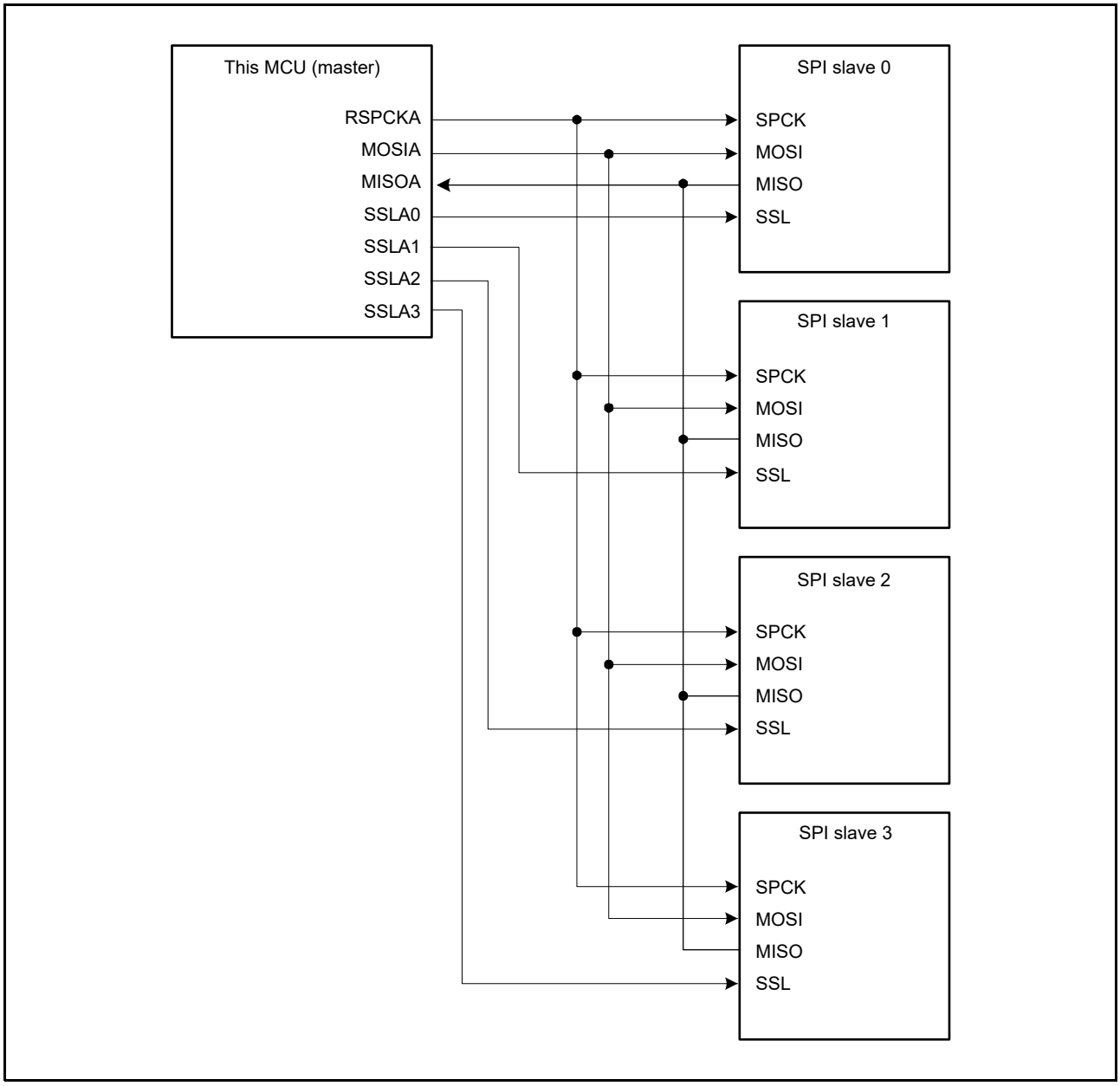

Figure 31.8 Single-Master/Multi-Slave Configuration Example (This MCU = Master)

31.3.3.4 Single Master/Multi-Slave (with This MCU Acting as Slave)

Figure 31.9 shows a single-master/multi-slave RSPI system configuration example when this MCU is used as a slave. In the example of Figure 31.9, the RSPI system is comprised of an SPI master and two MCUs (slave X and slave Y).
The SPCK and MOSI outputs of the SPI master are connected to the RSPCKA and MOSIA inputs of the MCUs (slave X and slave Y). The MISOA outputs of the MCUs (slave X and slave Y) are all connected to the MISO input of the SPI master. SSLX and SSLY outputs of the SPI master are connected to the SSLA0 inputs of the MCUs (slave X and slave Y), respectively.
The SPI master drives SPCK, MOSI, SSLX, and SSLY. Of the MCUs (slave X and slave Y), the slave that receives low-level input into the SSLA0 input drives MISOA.

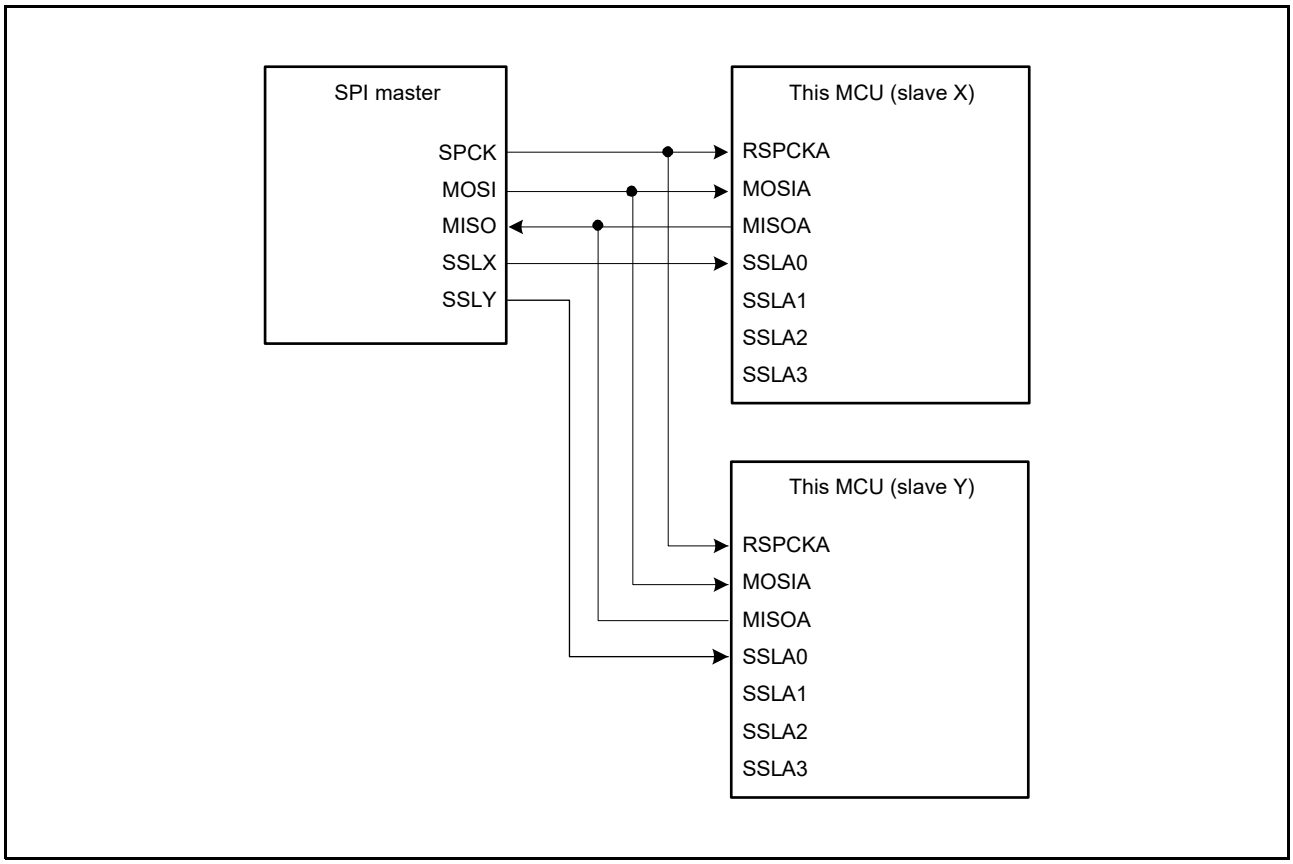

Figure 31.9 Single-Master/Multi-Slave Configuration Example (This MCU = Slave)

31.3.3.5 Multi-Master/Multi-Slave (with This MCU Acting as Master)

Figure 31.10 shows a multi-master/multi-slave RSPI system configuration example when this MCU is used as a master. In the example of Figure 31.10, the RSPI system is comprised of two MCUs (master X and master Y) and two SPI slaves (SPI slave 1 and SPI slave 2).

The RSPCKA and MOSIA outputs of the MCUs (master X and master Y) are connected to the RSPCK and MOSI inputs of SPI slaves 1 and 2. The MISO outputs of SPI slaves 1 and 2 are connected to the MISOA inputs of the MCUs (master X and master Y). Any generic port Y output from this MCU (master X) is connected to the SSLA0 input of this MCU (master Y). Any generic port X output of this MCU (master Y) is connected to the SSLA0 input of this MCU (master X). The SSLA1 and SSLA2 outputs of the MCUs (master X and master Y) are connected to the SSL inputs of the SPI slaves 1 and 2. In this configuration example, since the system can be comprised solely of SSLA0 input, and SSLA1 and SSLA2 outputs for slave connections, the SSLA3 output of this MCU is not required.

This MCU drives RSPCKA, MOSIA, SSLA1, and SSLA2 when the SSLA0 input level is high. When the SSLA0 input level is low, this MCU detects a mode fault error, sets RSPCKA, MOSIA, SSLA1, and SSLA2 to Hi-Z, and releases the RSPI bus right to the other master. Of the SPI slaves 1 and 2, the slave that receives low-level input into the SSL input drives MISO.

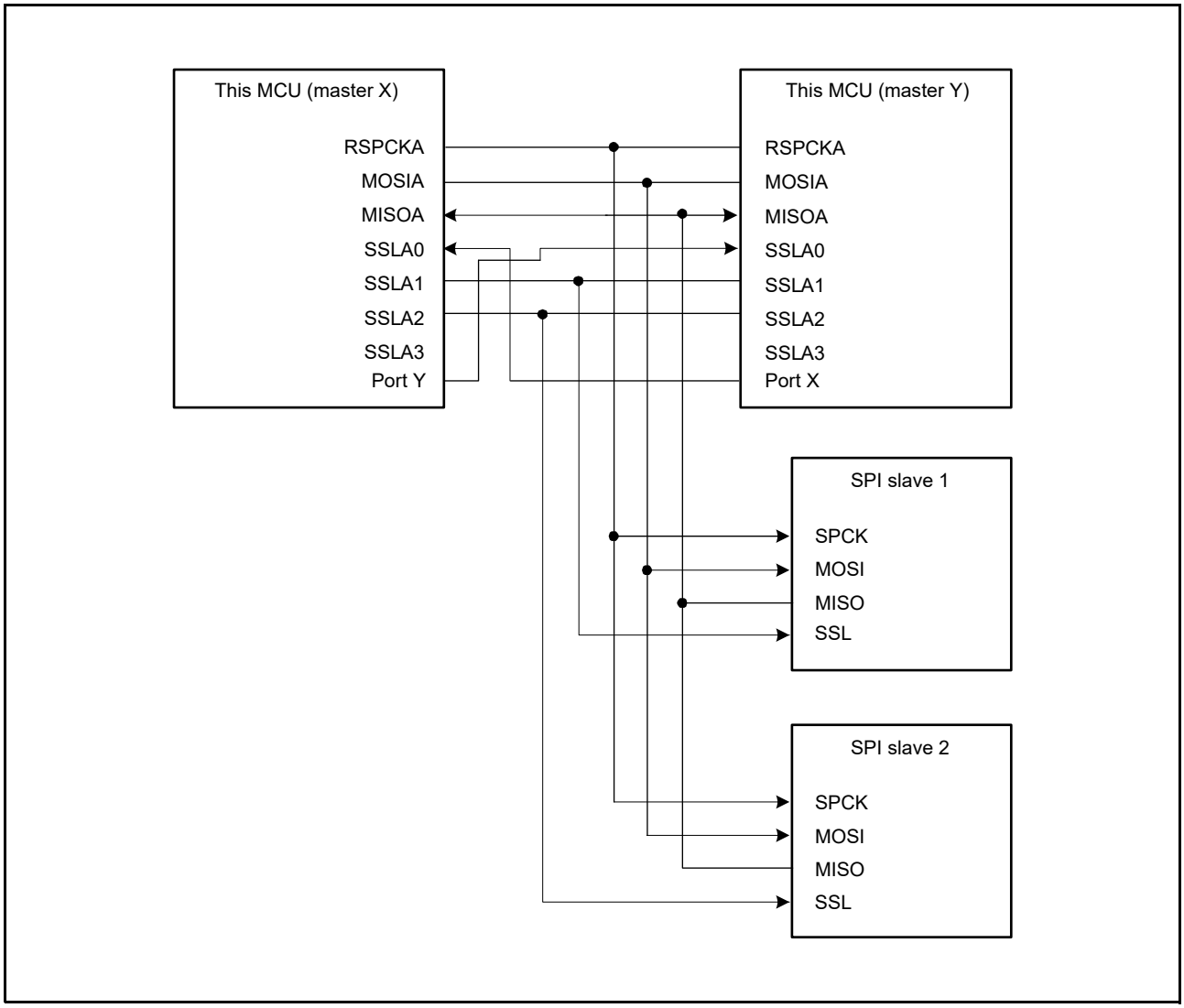

Figure 31.10 Multi-Master/Multi-Slave Configuration Example (This MCU = Master)

31.3.3.6 Master (Clock Synchronous Operation)/Slave (Clock Synchronous Operation) (with This MCU Acting as Master)

Figure 31.11 shows a master (clock synchronous operation)/slave (clock synchronous operation) RSPI system configuration example when this MCU is used as a master. In the master (clock synchronous operation)/slave (clock synchronous operation) configuration, SSLA0 to SSLA3 of this MCU (master) are not used.
This MCU (master) drives the RSPCKA and MOSIA. The SPI slave drives the MISO.

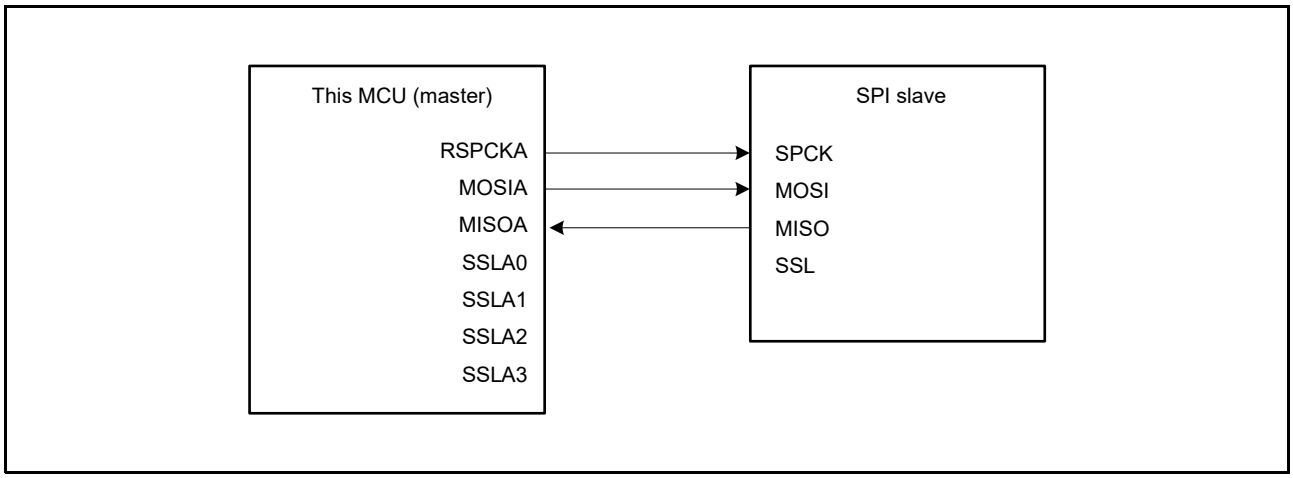

Figure 31.11 Master (Clock Synchronous Operation)/Slave (Clock Synchronous Operation) Configuration Example (This MCU = Master)

31.3.3.7 Master (Clock Synchronous Operation)/Slave (Clock Synchronous Operation) (with This MCU Acting as Slave)

Figure 31.12 shows a master (clock synchronous operation)/slave (clock synchronous operation) RSPI system configuration example when this MCU is used as a slave. When this MCU is to operate as a slave (clock synchronous operation), this MCU (slave) drives the MISOA and the SPI master drives the SPCK and MOSI. In addition, SSLA0 to SSLA3 of this MCU (slave) are not used.
Only in the single-slave configuration in which the SPCMDm.CPHA bit is set to 1, this MCU (slave) can execute serial transfer.

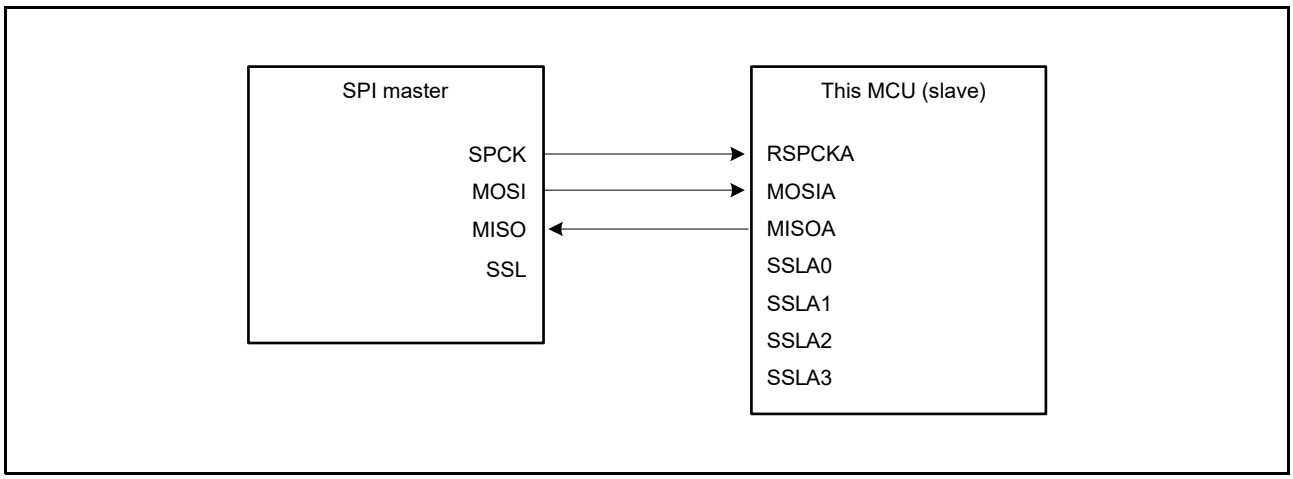

Figure 31.12 Master (Clock Synchronous Operation)/Slave (Clock Synchronous Operation) Configuration Example (This MCU = Slave, CPHA = 1)

31.3.4 Data Format

The RSPI's data format depends on the settings in RSPI command register m (SPCMDm) (m = 0 to 7) and the parity enable bit in RSPI control register 2 (SPCR2.SPPE). Regardless of whether the MSB or LSB is first, the RSPI treats the range from the LSB bit in the RSPI data register (SPDR) to the selected data length as transfer data.
The format of one frame of data before or after transfer is shown below.

(a) With Parity Disabled

When parity is disabled, transmission or reception of data proceeds with the length in bits selected in the RSPI data length setting bits in RSPI command register m (SPCMDm.SPB[3:0]).

(b) With Parity Enabled

When parity is enabled, transmission or reception of data proceeds with the length in bits selected in the RSPI data length setting bits in RSPI command register m (SPCMDm.SPB[3:0]). In this case, however, the last bit is a parity bit.

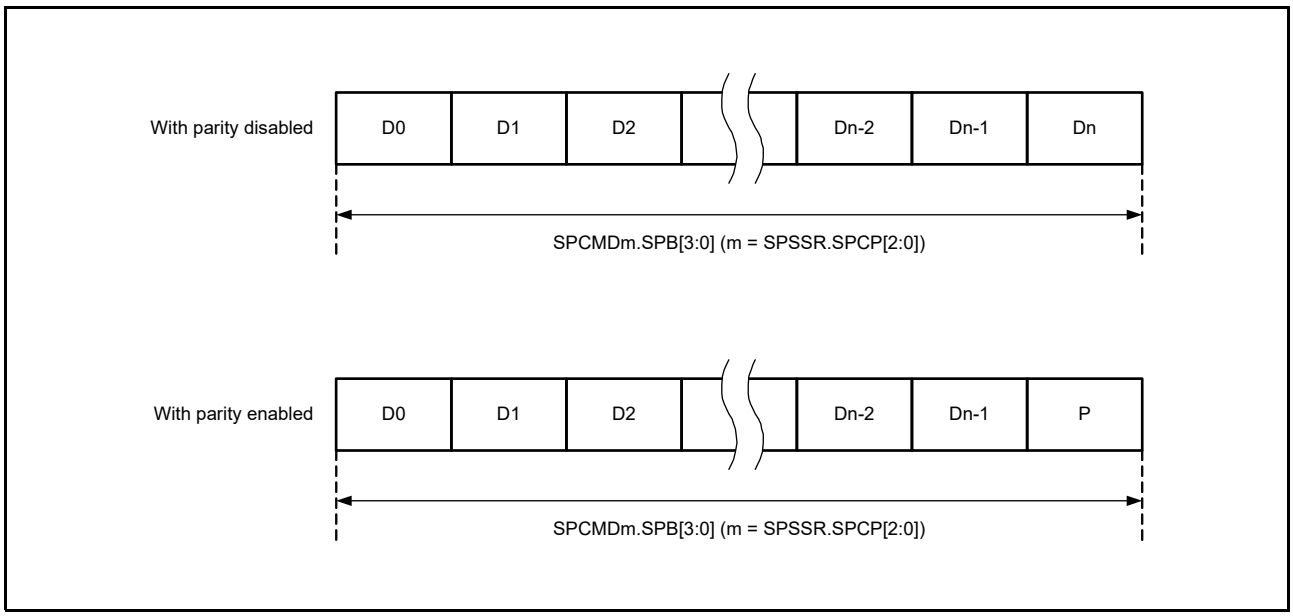

Figure 31.13 Outline of the Data Format (with Parity Disabled/Enabled)

31.3.4.1 When Parity is Disabled (SPCR2.SPPE = 0)

When parity is disabled, data for transmission are copied to the shift register with no prior processing. A description of the connection between the RSPI data register (SPDR) and the shift register in terms of the combination of MSB or LSB first and data length is given below.

(1) MSB First Transfer (32-Bit Data)

Figure 31.14 shows details of operations by the RSPI data register (SPDR) and the shift register in transfer with parity disabled, an RSPI data length of 32 bits, and MSB first selected.
In transmission, bits T31 to T00 from the current stage of the transmit buffer are copied to the shift register. Data for transmission are shifted out from the shift register in order from T31, through T30, and so on to T00.
In reception, received data are shifted in bit by bit through bit 0 of the shift register. When bits R31 to R00 have been collected after input of the required number of cycles of RSPCK, the value in the shift register is copied to the receive buffer.

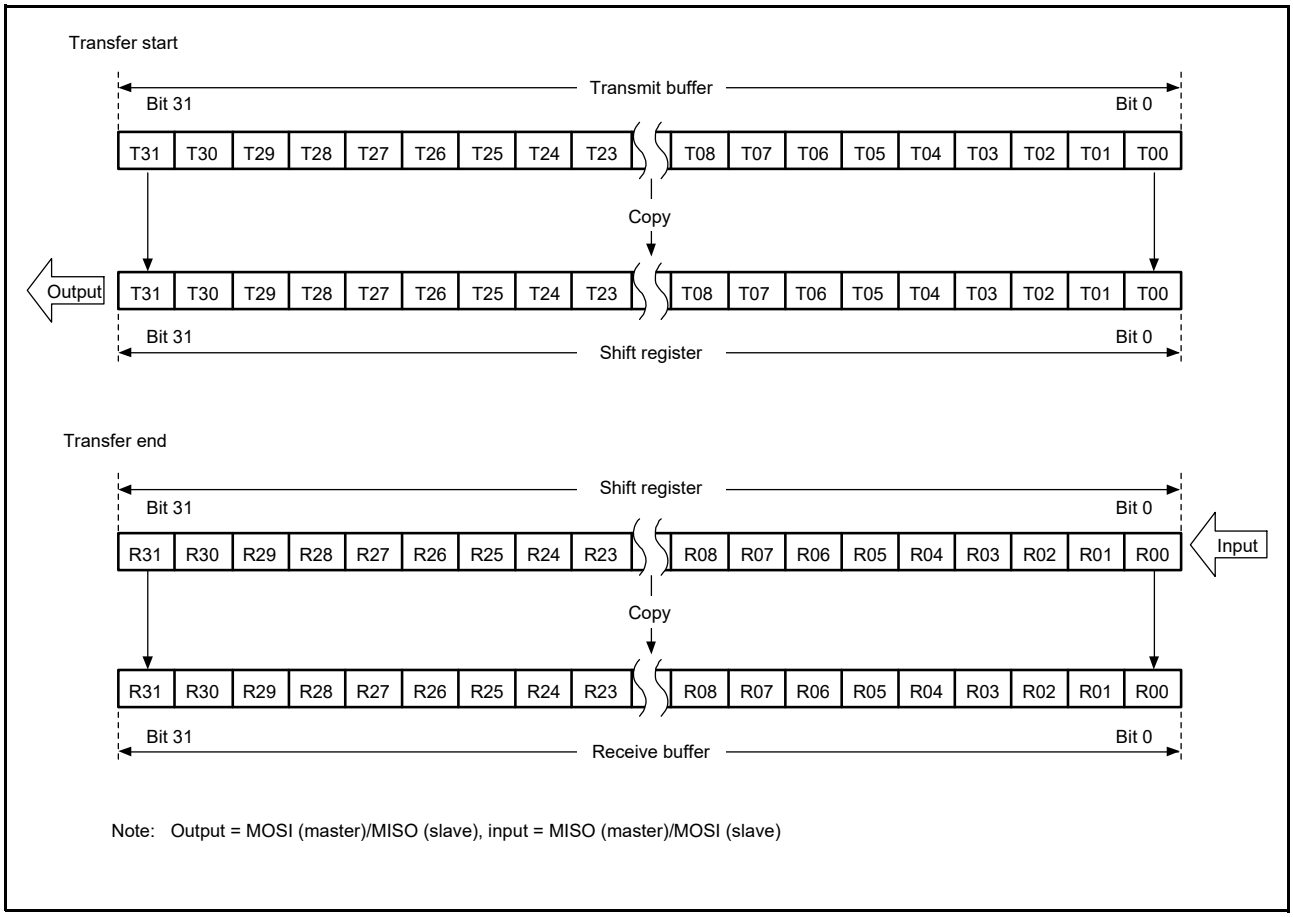

Figure 31.14 MSB First Transfer (32-Bit Data, Parity Disabled)

(2) MSB First Transfer (24-Bit Data)

Figure 31.15 shows details of operations by the RSPI data register (SPDR) and the shift register in transfer with parity disabled, 24 bits as the RSPI data length for an example that is not 32 bits, and MSB first selected.
In transmission, the lower 24 bits (T23 to T00) from the current stage of the transmit buffer are copied to the shift register. Data for transmission are shifted out from the shift register in order from T23, through T22, and so on to T00.
In reception, received data are shifted in bit by bit through bit 0 of the shift register. When bits R23 to R00 have been collected after input of the required number of cycles of RSPCK, the value in the shift register is copied to the receive buffer. At this time, the upper 8 bits of the transmit buffer are stored in the upper 8 bits of the receive buffer. Writing 0 to bits T31 to T24 at the time of transmission leads to 0 being set in the upper 8 bits of the receive buffer.

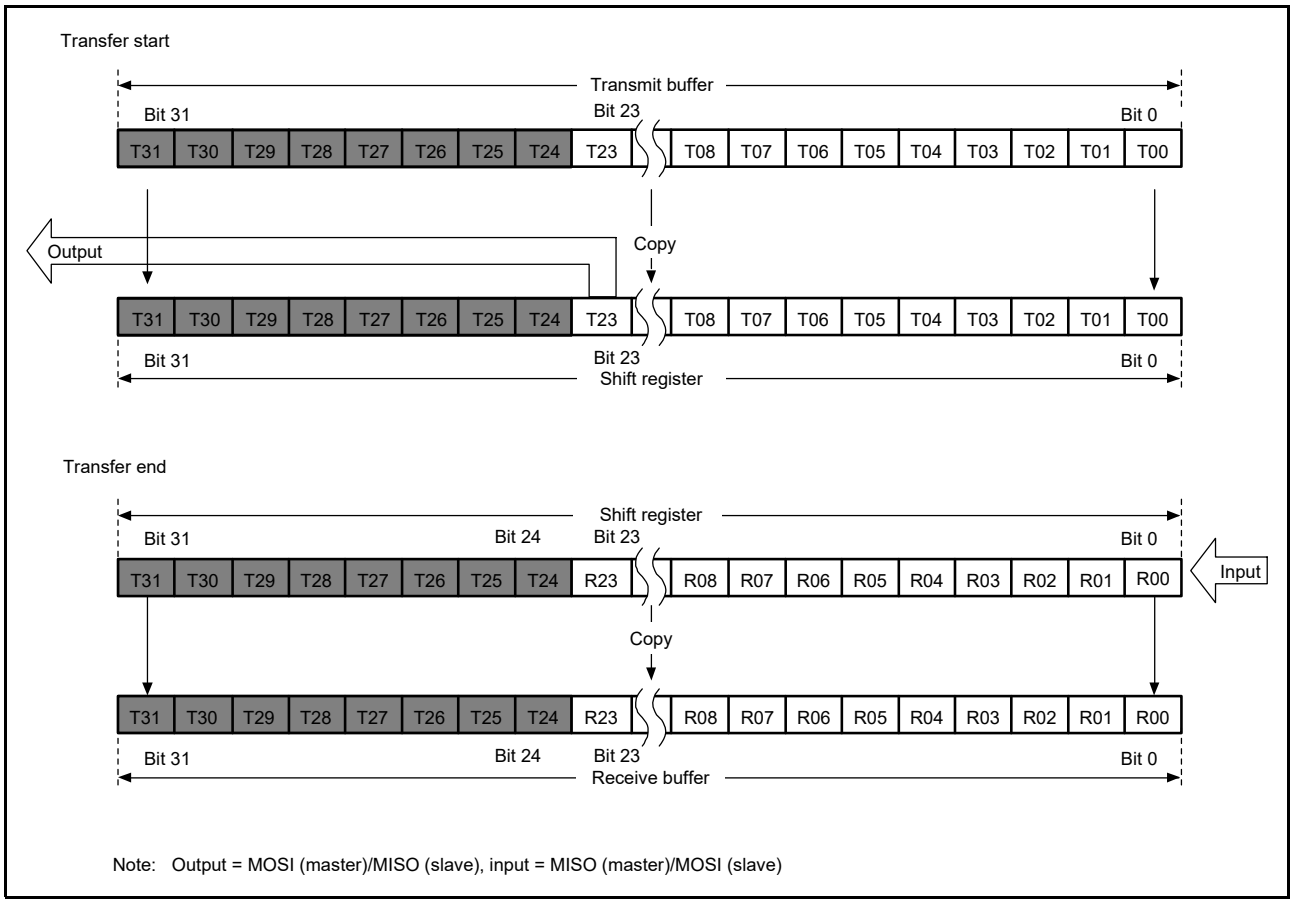

Figure 31.15 MSB First Transfer (24-Bit Data, Parity Disabled)

(3) LSB First Transfer (32-Bit Data)

Figure 31.16 shows details of operations by the RSPI data register (SPDR) and the shift register in transfer with parity disabled, an RSPI data length of 32 bits, and LSB first selected.

In transmission, bits T31 to T00 from the current stage of the transmit buffer are reordered bit by bit to obtain the order T00 to T31 for copying to the shift register. Data for transmission are shifted out from the shift register in order from T00, through T01, and so on to T31.

In reception, received data are shifted in bit by bit through bit 0 of the shift register. When bits R00 to R31 have been collected after input of the required number of cycles of RSPCK, the value in the shift register is copied to the receive buffer.

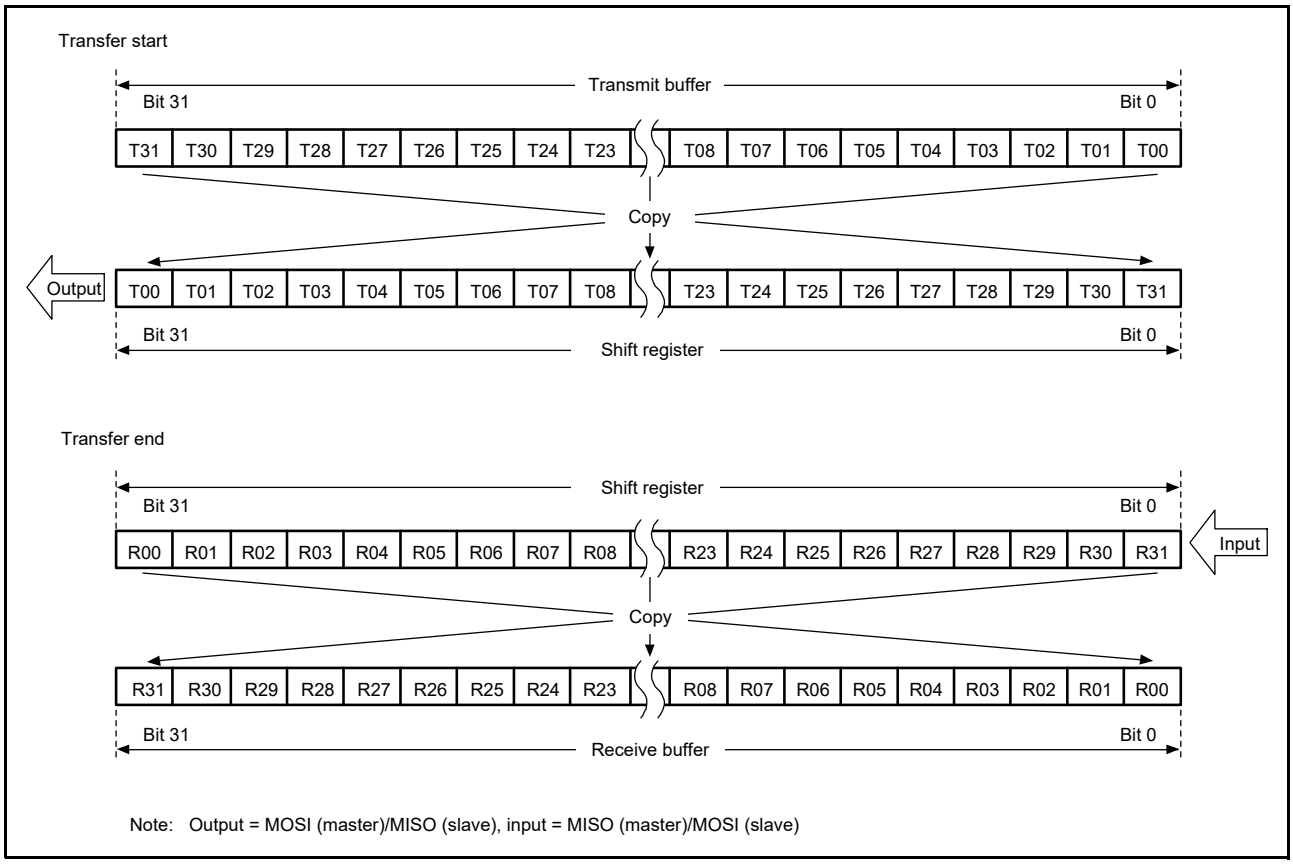

Figure 31.16 LSB First Transfer (32-Bit Data, Parity Disabled)

(4) LSB First Transfer (24-Bit Data)

Figure 31.17 shows details of operations by the RSPI data register (SPDR) and the shift register in transfer with parity disabled, 24 bits as the RSPI data length for an example that is not 32 bits, and LSB first selected.

In transmission, the lower 24 bits (T23 to T00) from the current stage of the transmit buffer are reordered bit by bit to obtain the order T00 to T23 for copying to the shift register. Data for transmission are shifted out from the shift register in order from T00, through T01, and so on to T23.

In reception, received data are shifted in bit by bit through bit 8 of the shift register. When bits R00 to R23 have been collected after input of the required number of cycles of RSPCK, the value in the shift register is copied to the receive buffer. At this time, the upper 8 bits of the transmit buffer are stored in the upper 8 bits of the receive buffer. Writing 0 to bits T31 to T24 at the time of transmission leads to 0 being set in the upper 8 bits of the receive buffer.

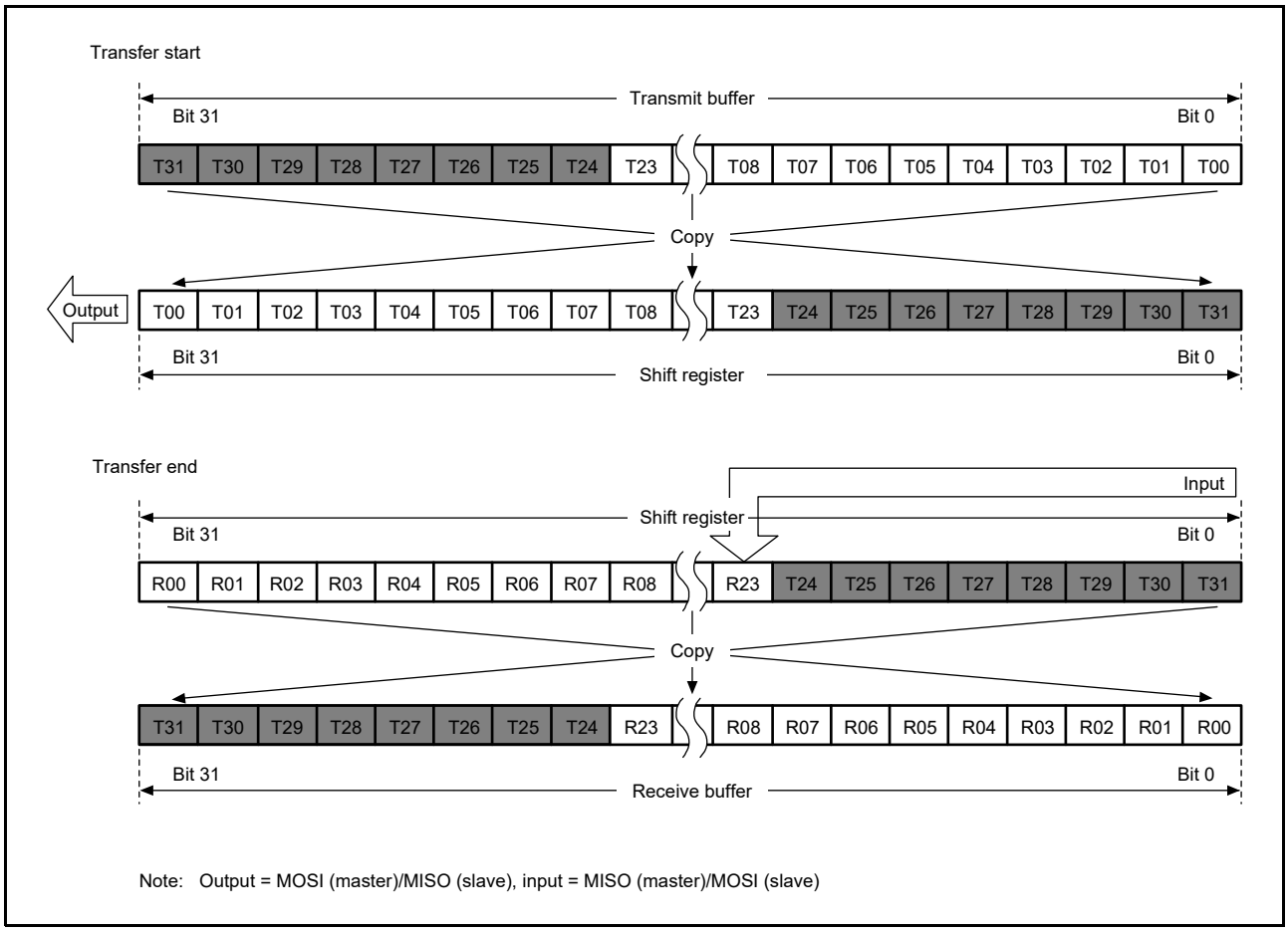

Figure 31.17 LSB First Transfer (24-Bit Data, Parity Disabled)

31.3.4.2 When Parity is Enabled (SPCR2.SPPE = 1)

When parity is enabled, the lowest-order bit of the data for transmission becomes a parity bit. Hardware calculates the value of the parity bit.

(1) MSB First Transfer (32-Bit Data)

Figure 31.18 shows details of operations by the RSPI data register (SPDR) and the shift register in transfer with parity enabled, an RSPI data length of 32 bits, and MSB first selected.
In transmission, the value of the parity bit (P) is calculated from bits T31 to T01. This replaces the final bit, T00, and the whole is copied to the shift register. Data are transmitted in the order T31, T30, …, T01, and P.
In reception, received data are shifted in bit by bit through bit 0 of the shift register. When bits R31 to P have been collected after input of the required number of cycles of RSPCK, the value in the shift register is copied to the receive buffer. On copying of data to the shift register, the data from R31 to P are checked by judging the parity.

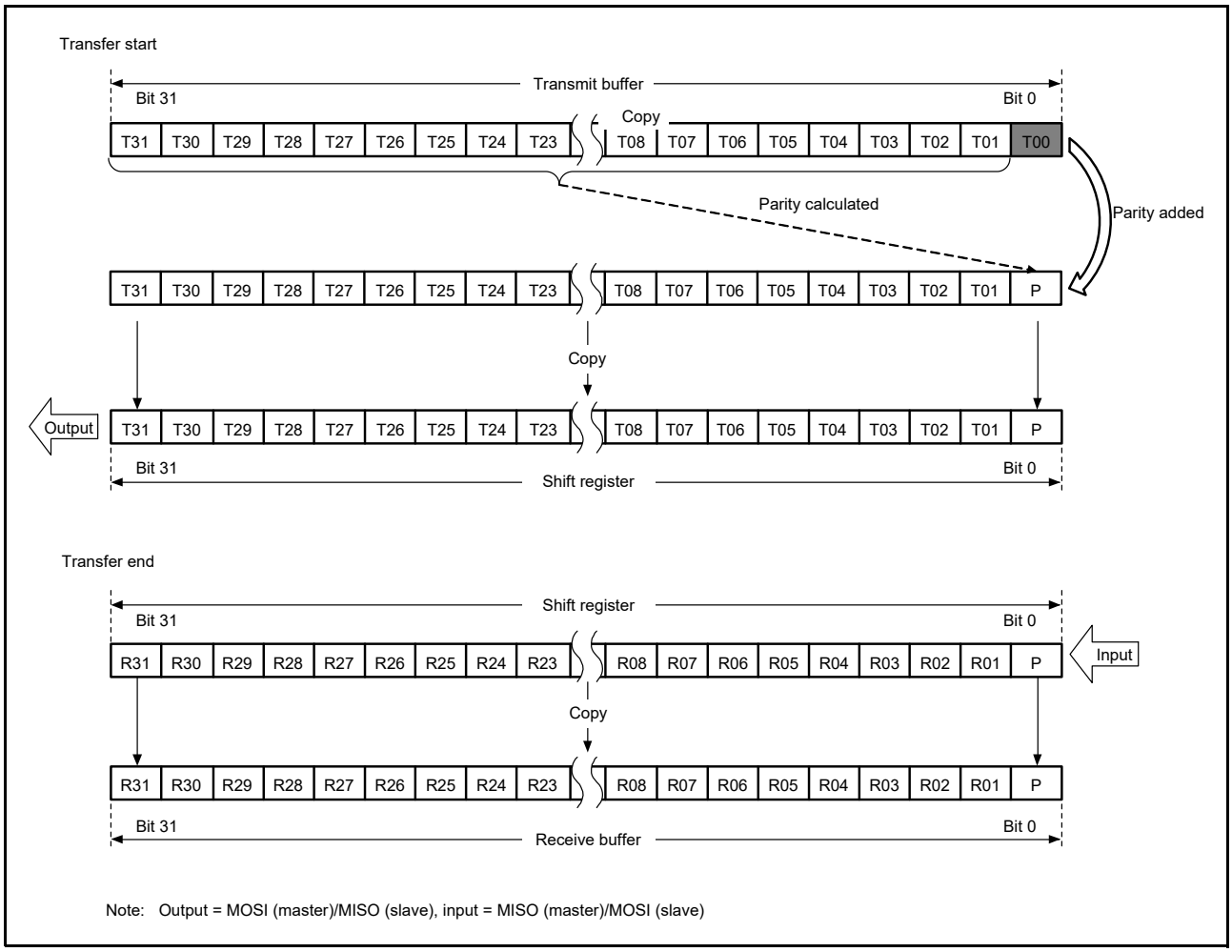

Figure 31.18 MSB First Transfer (32-Bit Data, Parity Enabled)

(2) MSB First Transfer (24-Bit Data)

Figure 31.19 shows details of operations by the RSPI data register (SPDR) and the shift register in transfer with parity enabled, 24 bits as the RSPI data length for an example that is not 32 bits, and MSB first selected.
In transmission, the value of the parity bit (P) is calculated from bits T23 to T01. This replaces the final bit, T00, and the whole is copied to the shift register. Data are transmitted in the order T23, T22, …, T01, and P.
In reception, received data are shifted in bit by bit through bit 0 of the shift register. When bits R23 to P have been collected after input of the required number of cycles of RSPCK, the value in the shift register is copied to the receive buffer. On copying of data to the shift register, the data from R23 to P are checked by judging the parity. At this time, the upper 8 bits of the transmit buffer are stored in the upper 8 bits of the receive buffer. Writing 0 to bits T31 to T24 at the time of transmission leads to 0 being set in the upper 8 bits of the receive buffer.

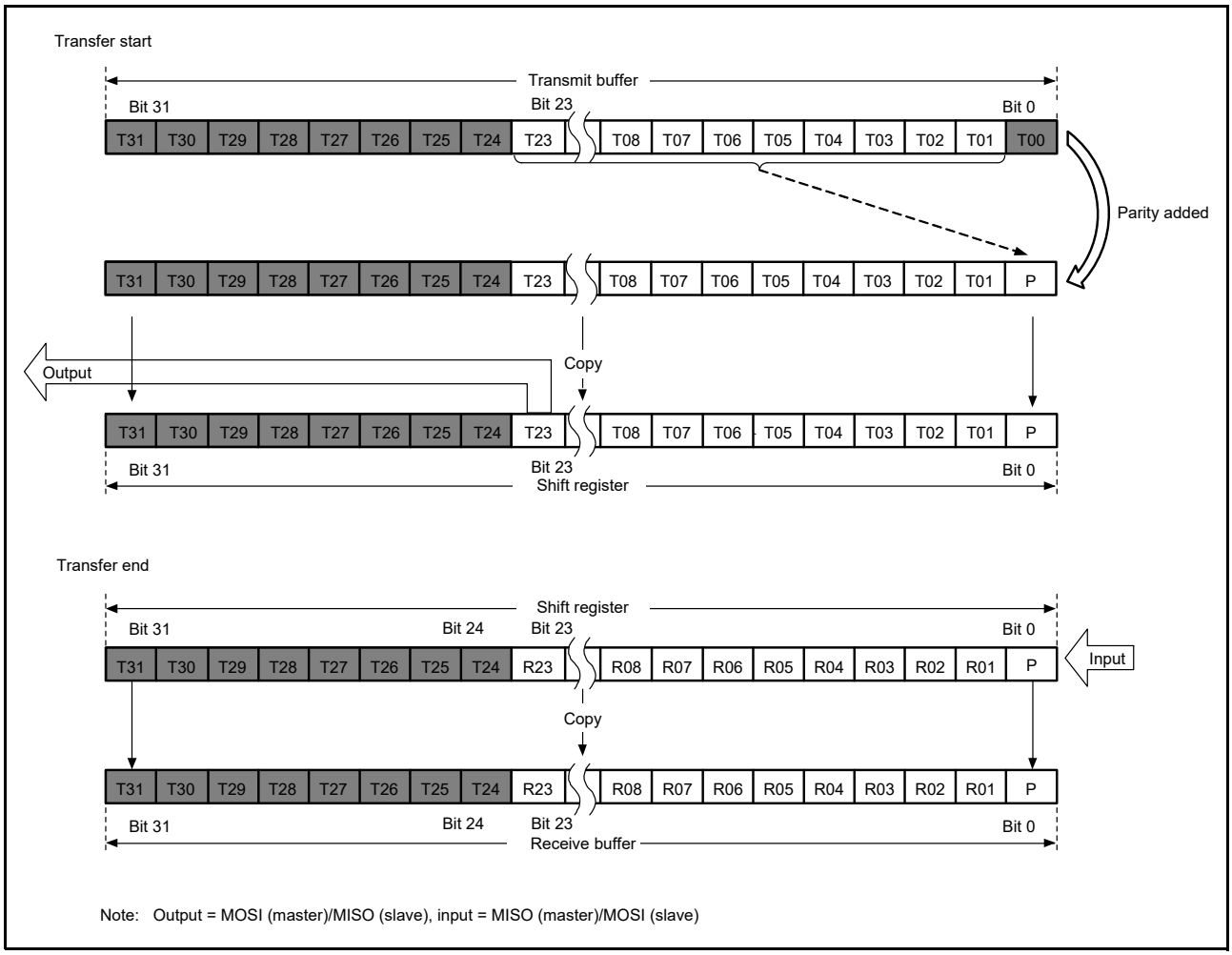

Figure 31.19 MSB First Transfer (24-Bit Data, Parity Enabled)

(3) LSB First Transfer (32-Bit Data)

Figure 31.20 shows details of operations by the RSPI data register (SPDR) and the shift register in transfer with parity enabled, an RSPI data length of 32 bits, and LSB first selected.

In transmission, the value of the parity bit (P) is calculated from bits T30 to T00. This replaces the final bit, T31, and the whole is copied to the shift register. Data are transmitted in the order T00, T01, …, T30, and P.

In reception, received data are shifted in bit by bit through bit 0 of the shift register. When bits R00 to P have been collected after input of the required number of cycles of RSPCK, the value in the shift register is copied to the receive buffer. On copying of data to the shift register, the data from R00 to P are checked by judging the parity.

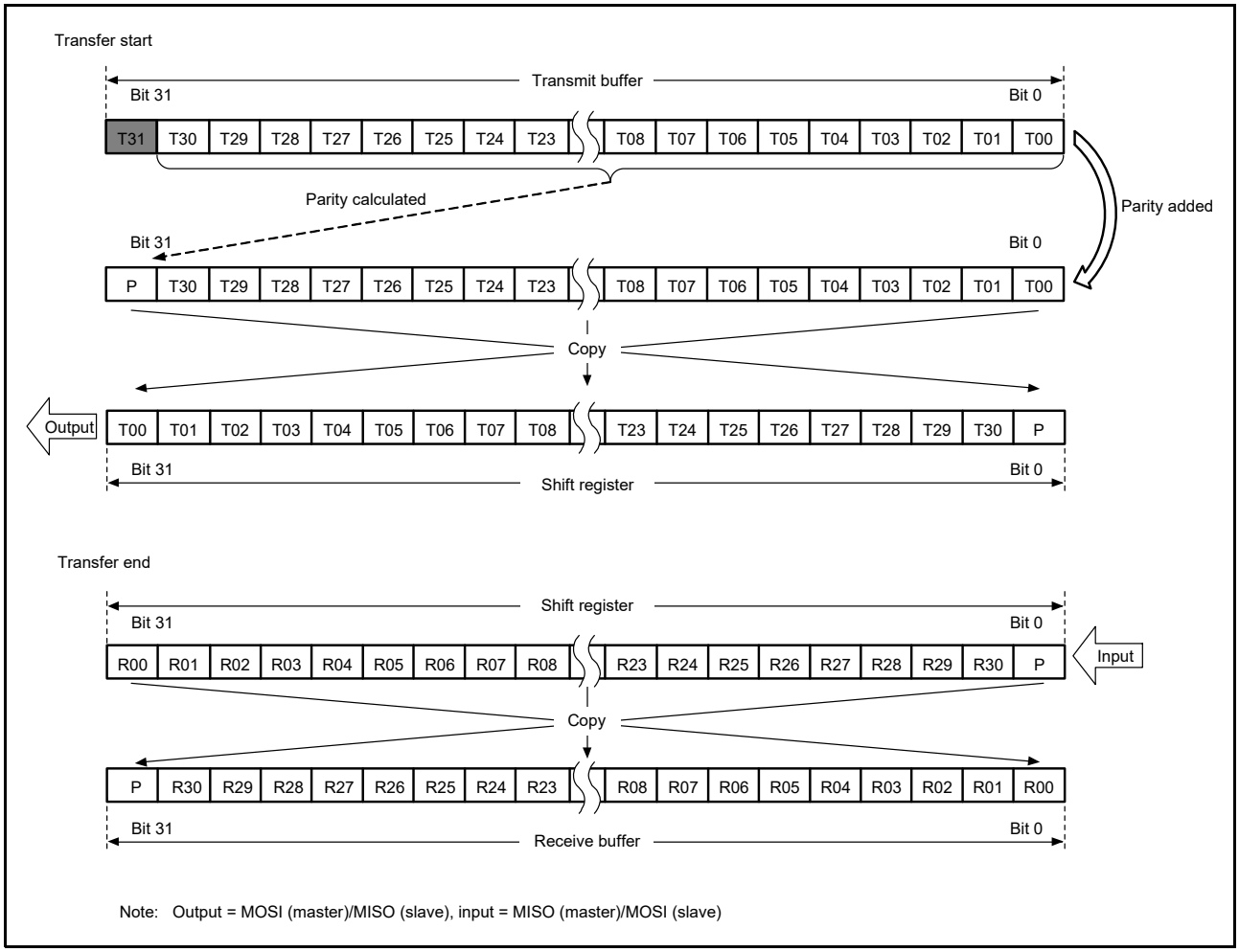

Figure 31.20 LSB First Transfer (32-Bit Data, Parity Enabled)

(4) LSB First Transfer (24-Bit Data)

Figure 31.21 shows details of operations by the RSPI data register (SPDR) and the shift register in transfer with parity enabled, 24 bits as the RSPI data length for an example that is not 32 bits, and LSB first selected.
In transmission, the value of the parity bit (P) is calculated from bits T22 to T00. This replaces the final bit, T23, and the whole is copied to the shift register. Data are transmitted in the order T00, T01, …, T22, and P.
In reception, received data are shifted in bit by bit through bit 8 of the shift register. When bits R00 to P have been collected after input of the required number of cycles of RSPCK, the value in the shift register is copied to the receive buffer. On copying of data to the shift register, the data from R00 to P are checked by judging the parity. At this time, the upper 8 bits of the transmit buffer are stored in the upper 8 bits of the receive buffer. Writing 0 to bits T31 to T24 at the time of transmission leads to 0 being set in the upper 8 bits of the receive buffer.

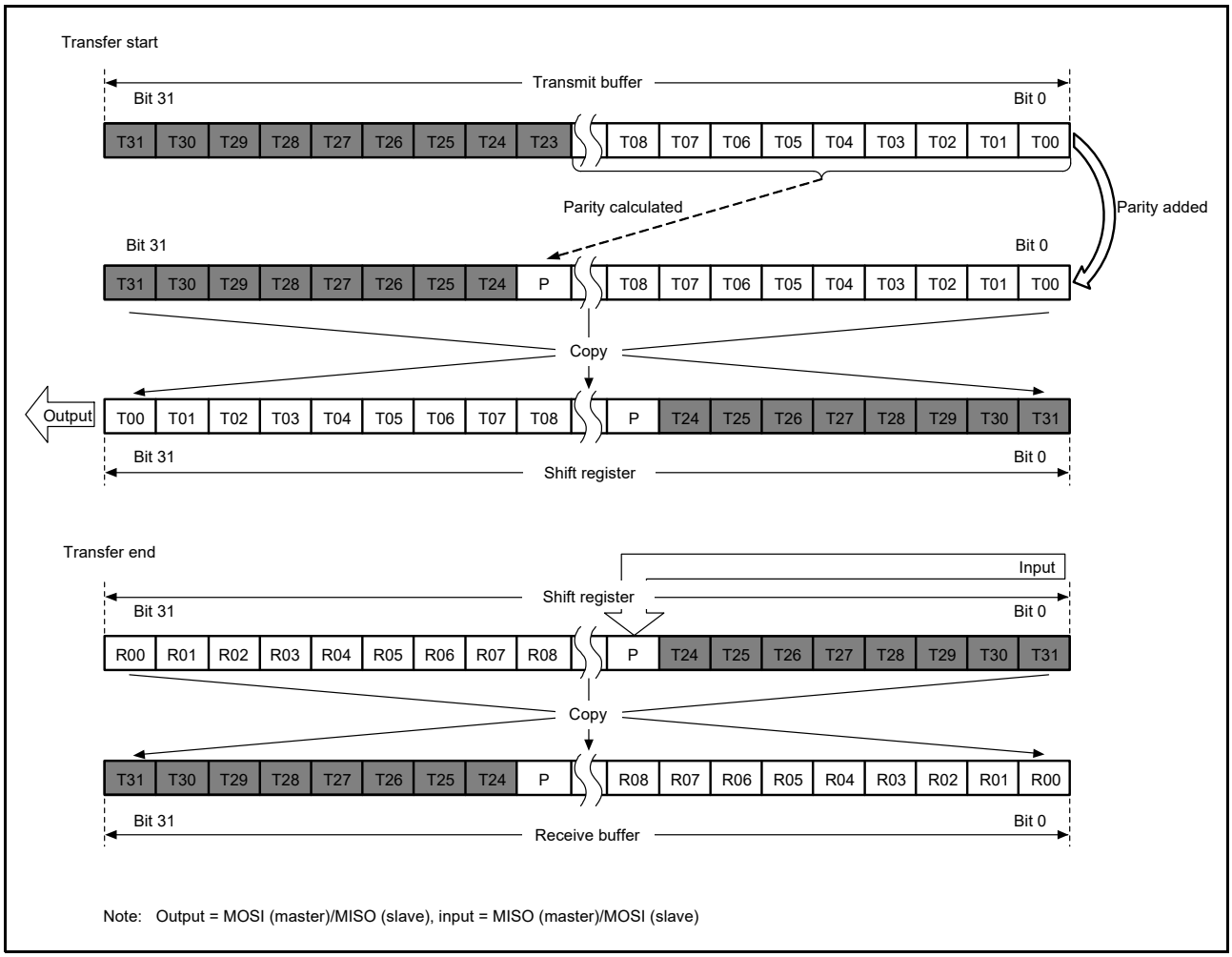

Figure 31.21 LSB First Transfer (24-Bit Data, Parity Enabled)

31.3.5 Transfer Format

31.3.5.1 CPHA = 0

Figure 31.22 shows a sample transfer format for the serial transfer of 8-bit data when the SPCMDm.CPHA bit is 0. Note that clock synchronous operation (the SPCR.SPMS bit is 1) should not performed when the RSPI operates in slave mode (SPCR.MSTR = 0) and the CPHA bit is 0. In Figure 31.22, RSPCKA (CPOL = 0) indicates the RSPCKA signal waveform when the SPCMDm.CPOL bit is 0; RSPCKA (CPOL = 1) indicates the RSPCKA signal waveform when the CPOL bit is 1. The sampling timing represents the timing at which the RSPI fetches serial transfer data into the shift register. The I/O directions of the signals depend on the RSPI settings. For details, refer to section 31.3.2, Controlling RSPI Pins.

When the SPCMDm.CPHA bit is 0, the driving of valid data to the MOSIA and MISOA signals commences at an SSLAi signal assertion timing. The first RSPCKA signal change timing that occurs after the SSLAi signal assertion becomes the first transfer data fetch timing. After this timing, data is sampled at every 1 RSPCK cycle. The change timing for MOSIA and MISOA signals is 1/2 RSPCK cycles after the transfer data fetch timing. The CPOL bit setting does not affect the RSPCKA signal operation timing; it only affects the signal polarity.

t1 denotes a period from an SSLAi signal assertion to RSPCKA oscillation (RSPCK delay). t2 denotes a period from the termination of RSPCKA oscillation to an SSLAi signal negation (SSL negation delay). t3 denotes a period in which SSLAi signal assertion is suppressed for the next transfer after the end of serial transfer (next-access delay). t1, t2, and t3 are controlled by a master device running on the RSPI system. For a description of t1, t2, and t3 when the RSPI of this MCU is in master mode, refer to section 31.3.11.1, Master Mode Operation.

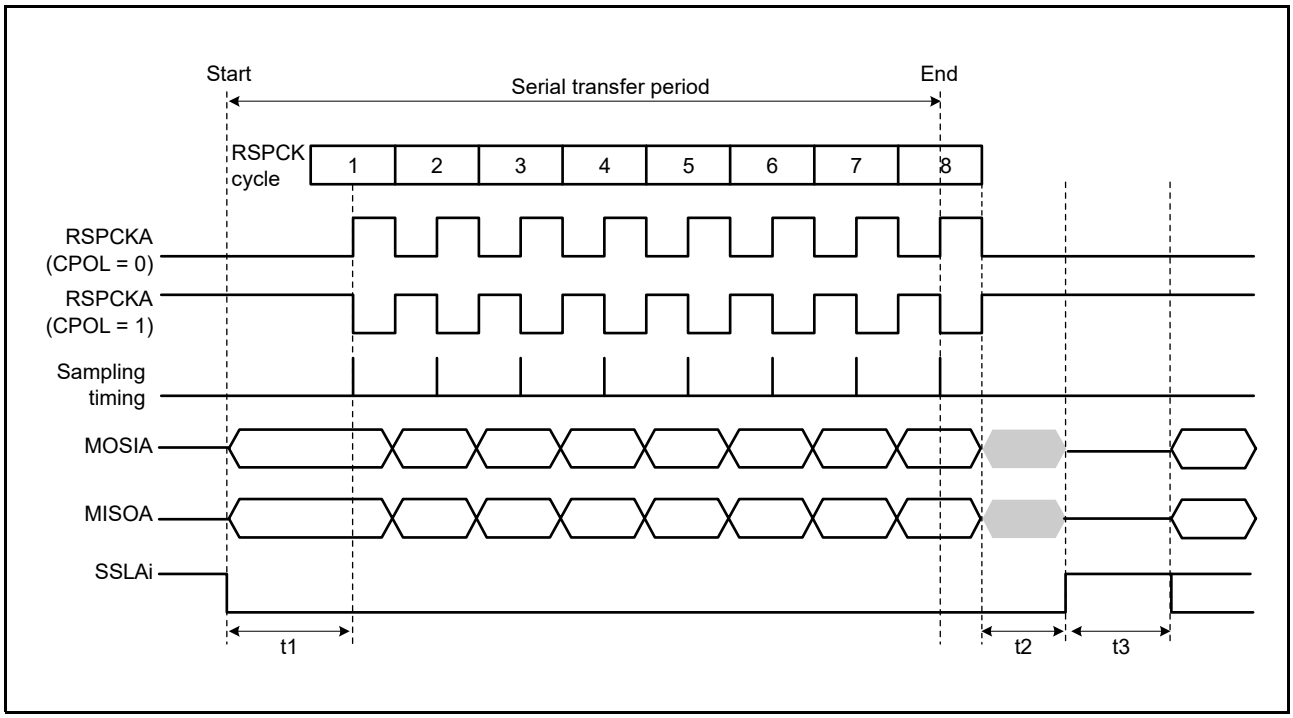

Figure 31.22 RSPI Transfer Format (CPHA = 0)

31.3.5.2 CPHA = 1

Figure 31.23 shows a sample transfer format for the serial transfer of 8-bit data when the SPCMDm.CPHA bit is 1. However, when the SPCR.SPMS bit is 1, the SSLAi signals are not used, and only the three signals RSPCKA, MOSIA, and MISOA handle communications. In Figure 31.23, RSPCK (CPOL = 0) indicates the RSPCKA signal waveform when the SPCMDm.CPOL bit is 0; RSPCKA (CPOL = 1) indicates the RSPCKA signal waveform when the CPOL bit is 1. The sampling timing represents the timing at which the RSPI fetches serial transfer data into the shift register. The I/O directions of the signals depend on the RSPI mode (master or slave). For details, refer to section 31.3.2, Controlling RSPI Pins.

When the SPCMDm.CPHA bit is 1, the driving of invalid data to the MISOA signal commences at an SSLAi signal assertion timing. The output of valid data to the MOSIA and MISOA signals commences at the first RSPCKA signal change timing that occurs after the SSLAi signal assertion. After this timing, data is updated at every 1 RSPCK cycle. The transfer data fetch timing is 1/2 RSPCK cycles after the data update timing. The SPCMDm.CPOL bit setting does not affect the RSPCKA signal operation timing; it only affects the signal polarity.

t1, t2, and t3 are the same as those in the case of CPHA = 0. For a description of t1, t2, and t3 when the RSPI of this MCU is in master mode, refer to section 31.3.11.1, Master Mode Operation.

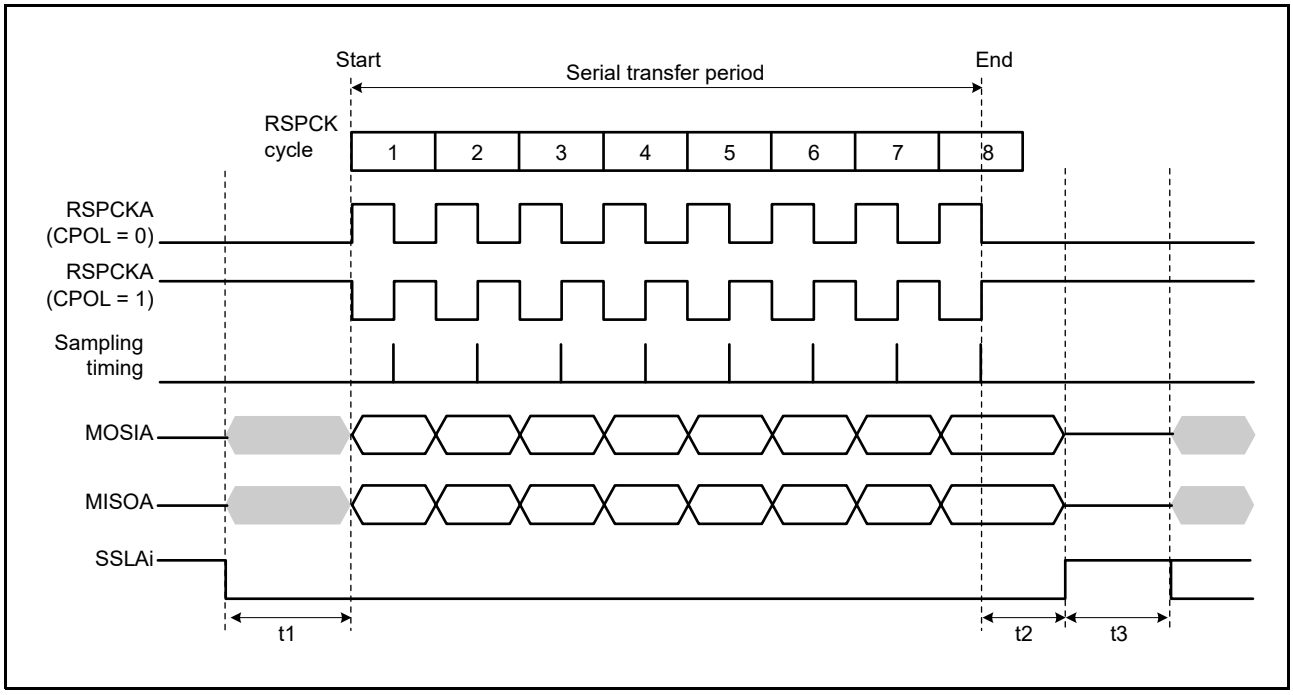

Figure 31.23 RSPI Transfer Format (CPHA = 1)

31.3.6 Communications Operating Mode

Full-duplex communications or transmit-only simplex communications can be selected by the SPCR.TXMD bit. ‘SPDR access’ shown in Figure 31.24 and Figure 31.25 indicate the condition of access to the SPDR register, where ‘W’ denotes a write cycle.

31.3.6.1 Full-Duplex Communications (SPCR.TXMD = 0)

Figure 31.24 shows an example of operation when the SPCR.TXMD bit is set to 0. In the example in Figure 31.24, the RSPI performs an 8-bit serial transfer in which the SPDCR.SPFC[1:0] bits are 00b, the SPCMDm.CPHA bit is 1, and the SPCMDm.CPOL bit is 0. The numbers given under the RSPCKA waveform represent the number of RSPCK cycles (i.e., the number of transferred bits).

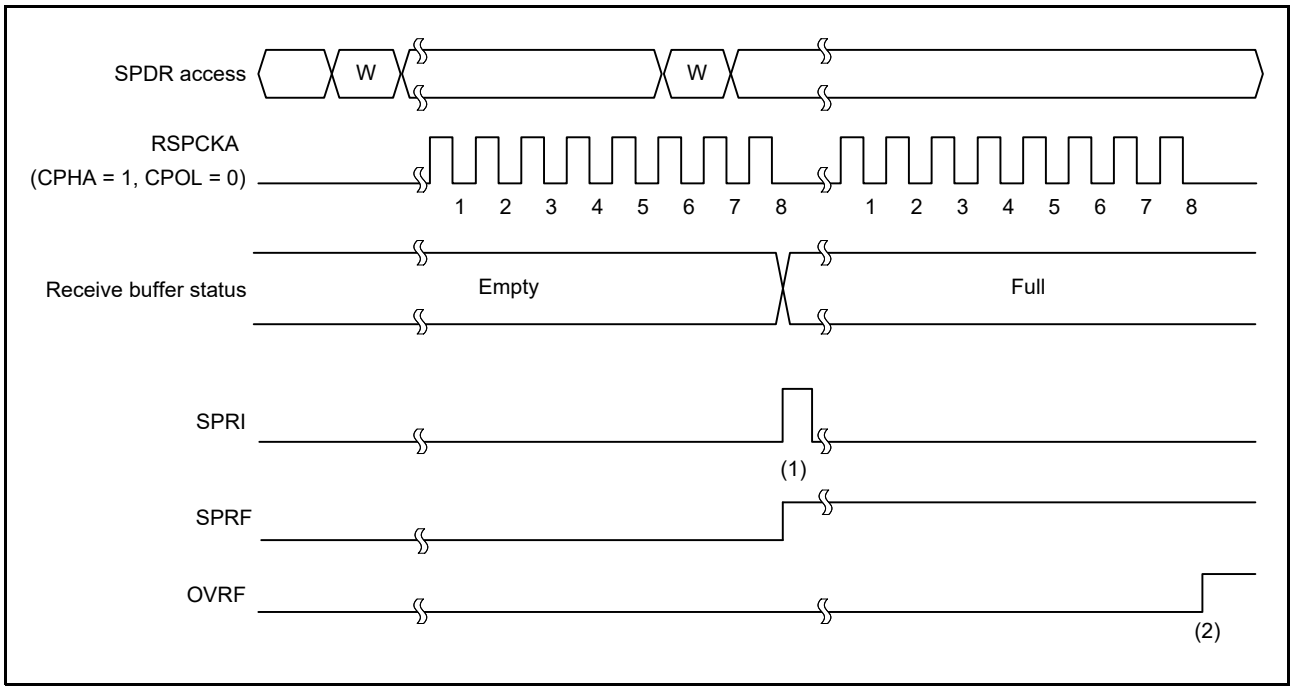

Figure 31.24 Operation Example of SPCR.TXMD = 0

The operation of the flags at timings shown in steps (1) and (2) in the figure is described below.

(1) When a serial transfer ends with the receive buffer of the SPDR register empty, the RSPI generates a receive buffer full interrupt request (SPRI) (sets the SPSR.SPRF flag to 1) and copies the received data in the shift register to the receive buffer.

(2) When a serial transfer ends with the receive buffer of the SPDR register holding data that was received in the previous serial transfer, the RSPI sets the SPSR.OVRF flag to 1 and discards the received data in the shift register.

When full-duplex communications (SPCR.TXMD = 0) is selected, reception occurs simultaneously with transmit operations. As such, the SPRF and OVRF flags in the SPSR register become 1 at the timing described in (1) and (2), respectively, according to the state of the receive buffer.

31.3.6.2 Transmit-only Simplex Communications (SPCR.TXMD = 1)

Figure 31.25 shows an example of operation when the SPCR.TXMD bit is set to 1. In the example in Figure 31.25, the RSPI performs an 8-bit serial transfer in which the SPDCR.SPFC[1:0] bits are 00b, the SPCMDm.CPHA bit is 1, and the SPCMDm.CPOL bit is 0. The numbers given under the RSPCKA waveform represent the number of RSPCK cycles (i.e., the number of transferred bits).

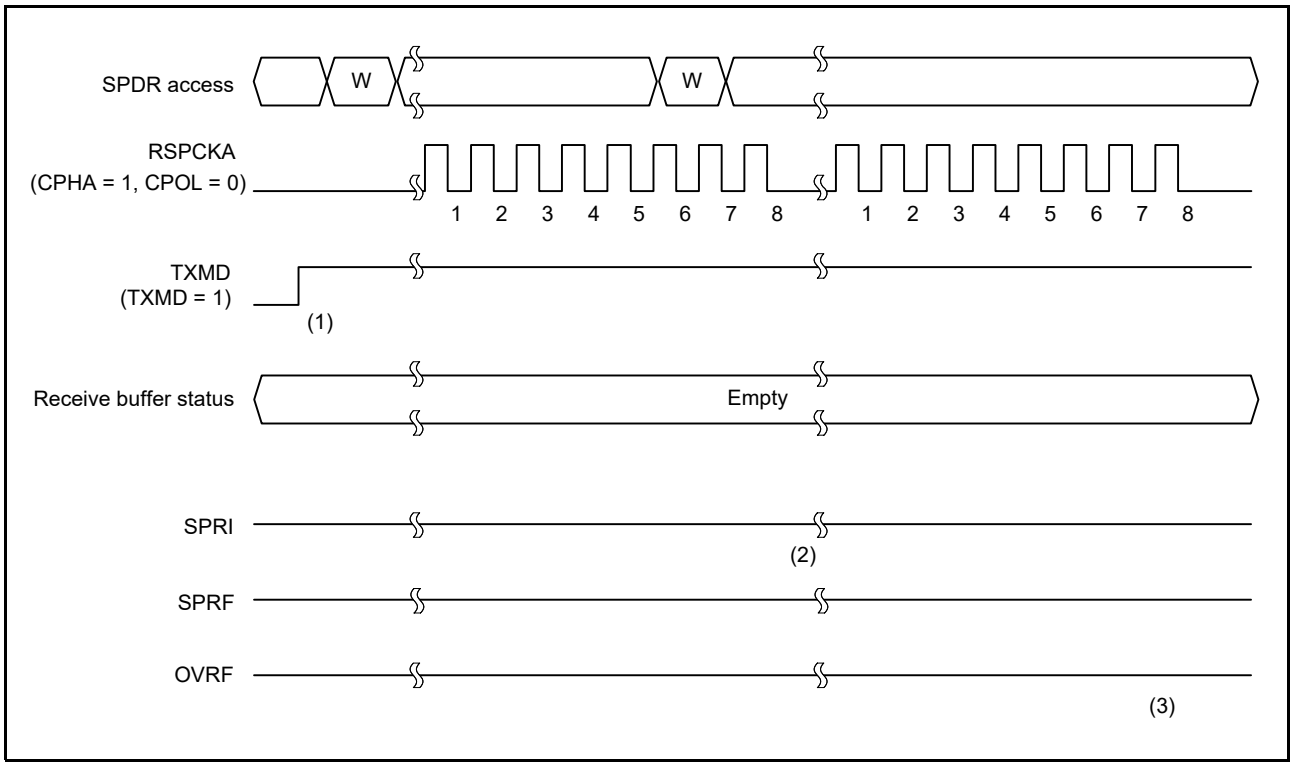

Figure 31.25 Operation Example of SPCR.TXMD = 1

The operation of the flags at timings shown in steps (1) to (3) in the figure is described below.

(1) Make sure there is no data left in the receive buffer and the SPSR.SPRF, OVRF flags are 0 before entering the mode of transmit-only simplex communications (SPCR.TXMD = 1).

(2) When a serial transfer ends with the receive buffer of the SPDR register empty, if the mode of transmit-only simplex communications is selected (SPCR.TXMD = 1), the SPRF flag remains 0 and the RSPI does not copy the data from the shift register to the receive buffer.

(3) Since the receive buffer of the SPDR register does not hold data that was received in the previous serial transfer, even when a serial transfer ends, the SPSR.OVRF flag retains the value of 0, and the data in the shift register is not copied to the receive buffer.

When performing transmit-only simplex communications (SPCR.TXMD = 1), the RSPI transmits data but does not receive data. Therefore, the SPSR.SPRF, OVRF flags remain 0 at the timings of (1) to (3).

31.3.7 Transmit Buffer Empty/Receive Buffer Full Interrupts

Figure 31.26 shows an example of operation of the transmit buffer empty interrupt (SPTI) and the receive buffer full interrupt (SPRI). 'SPDR access' shown in Figure 31.26 indicates the condition of access to the SPDR register, where 'W' denotes a write cycle, and 'R' a read cycle. In the example in Figure 31.26, the RSPI performs an 8-bit serial transfer in which the SPCR.TXMD bit is 0, the SPDCR.SPFC[1:0] bits are 00b, the SPCMDm.CPHA bit is 1, and the SPCMDm.CPOL bit is 0. The numbers given under the RSPCKA waveform represent the number of RSPCK cycles (i.e., the number of transferred bits).

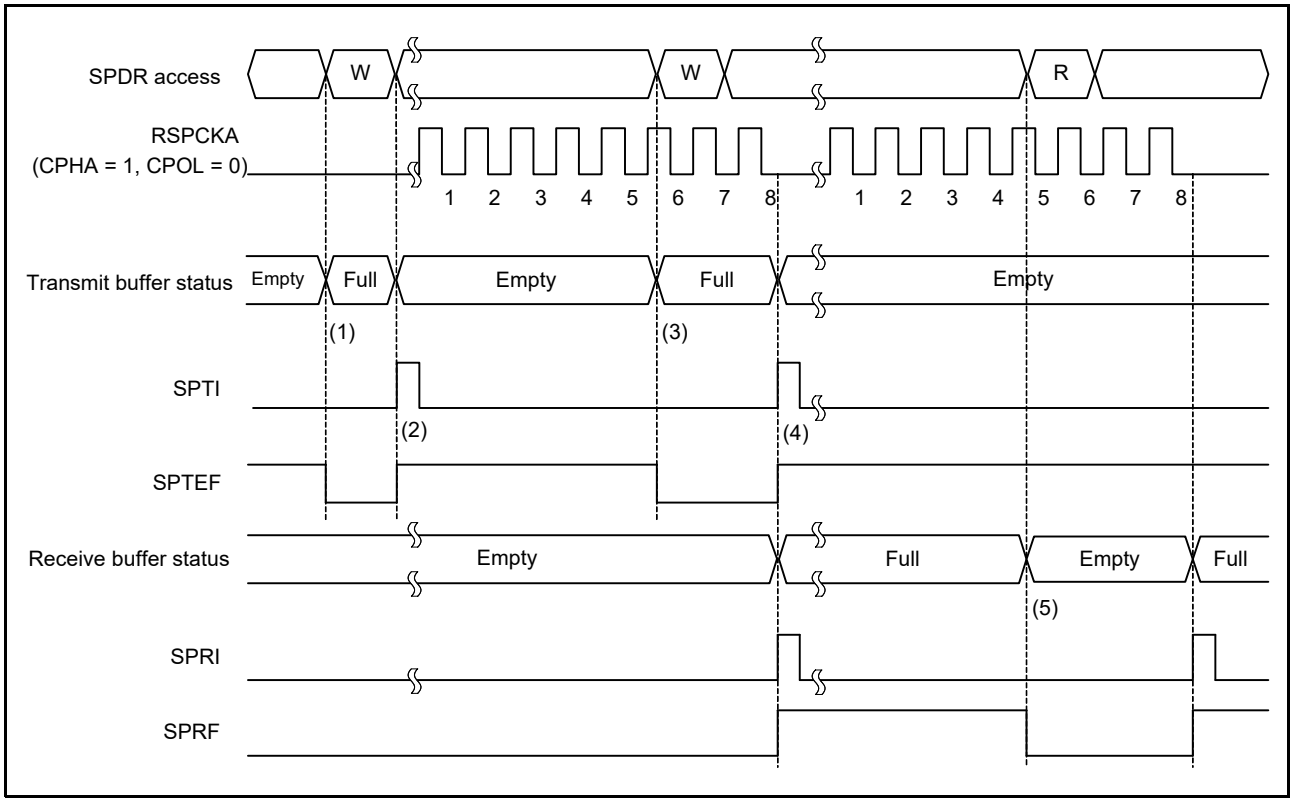

Figure 31.26 Operation Example of SPTI and SPRI Interrupts

The operation of the interrupts at timings shown in steps (1) to (5) in the figure is described below.

(1) When transmit data is written to the SPDR register when the transmit buffer of the SPDR register is empty (data for the next transfer is not set), the RSPI writes data to the transmit buffer and sets the SPSR.SPTEF flag to 0.

(2) If the shift register is empty, the RSPI copies the data from the transmit buffer to the shift register and generates a transmit buffer empty interrupt request (SPTI) and sets the SPSR.SPTEF flag to 1. How a serial transfer is started depends on the mode of the RSPI. For details, refer to section 31.3.11, SPI Operation, and section 31.3.12, Clock Synchronous Operation.

(3) When transmit data is written to the SPDR register in the transmit buffer empty interrupt routine or in the transmit buffer empty detecting process by polling the SPTEF flag, the data is transferred to the transmit buffer and the SPSR.SPTEF flag becomes 0. Because the data being transmitted is stored in the shift register, the RSPI does not copy the data from the transmit buffer to the shift register.

(4) When the serial transfer ends with the receive buffer of the SPDR register being empty, the RSPI copies the receive data from the shift register to the receive buffer, generates a receive buffer full interrupt request (SPRI), and sets the SPSR.SPRF flag to 1. Since the shift register becomes empty upon completion of serial transfer, when the transmit buffer had been full before the serial transfer ended, the RSPI sets the SPSR.SPTEF flag to 1 and copies the data from the transmit buffer to the shift register. Even when received data is not copied from the shift register to the receive buffer in an overrun error status, upon completion of the serial transfer, the RSPI determines that the shift register is empty, thus data transfer from the transmit buffer to the shift register is enabled.

(5) When the SPDR register is read in the receive buffer full interrupt routine or in the receive buffer full detecting process by polling the SPRF flag, the receive data can be read. When the receive data is read, the SPRF flag becomes 0.

If transmit data is written to the SPDR register while the transmit buffer holds data that has not yet been transmitted (the SPTEF flag is 0), the RSPI does not update the data in the transmit buffer. Transmit data should be written to the SPDR register in the transmit buffer empty interrupt request routine or in the transmit buffer empty detecting process by polling the SPTEF flag. To use a transmit buffer empty interrupt, set the SPTIE bit in SPCR to 1.
When setting the SPCR.SPE bit to 0 (RSPI disabled), the SPCR.SPTIE bit should also be set to 0. Otherwise (if the SPCR.SPE bit is 0 and the SPCR.SPTIE is 1), a transmit buffer empty interrupt request will occur.
When serial transfer ends with the receive buffer being full (the SPRF flag is 1), the RSPI does not copy data from the shift register to the receive buffer, and detects an overrun error (refer to section 31.3.9, Error Detection). To prevent a receive data overrun error, read the received data using a receive buffer full interrupt request before the next serial transfer ends. To use an receive buffer full interrupt, set the SPCR.SPRIE bit to 1.
Transmit and receive interrupts or the corresponding IRn.IR flags (where n is the interrupt vector number) in the ICU can be used to confirm the states of the transmit and receive buffers. Refer to section 14, Interrupt Controller (ICUb), for the interrupt vector numbers. The status of the transmit and receive buffers can be also confirmed by the SPTEF and SPRF flags.

31.3.8 Idle Interrupt

When the SPSR.IDLNF flag becomes 0 while the SPCR2.SPIIE bit is 1, an idle interrupt request (SPII) is generated.
In master mode, the IDLNF flag is 0 before transmission. Therefore, write data in the transmit buffer and set the SPIIE bit to 1 after the IDLNF flag becomes 1 so that an idle interrupt is not generated at this time. When the SSLA0 signal is negated after the transmission is completed and the next data is not supplied until next-access delay time (t3) elapses, the IDLNF flag becomes 0.

31.3.9 Error Detection

In the normal RSPI serial transfer, the data written to the transmit buffer of the SPDR register is transmitted, and the received data can be read from the receive buffer of the SPDR register. If access is made to the SPDR register, depending on the status of the transmit/receive buffer or the status of the RSPI at the beginning or end of serial transfer, in some cases non-normal transfers can be executed.

If a non-normal transfer operation occurs, the RSPI detects the event as an underrun error, overrun error, parity error, or mode fault error. Table 31.7 lists the relationship between non-normal transfer operations and the RSPI's error detection function.

Table 31.7 Relationship between Non-Normal Transfer Operations and RSPI Error Detection Function

	Occurrence Condition	RSPI Operation	Error Detection
1	The SPDR register is written when the transmit buffer is full.	• The contents of the transmit buffer are kept. • Missing write data.	None
2	The SPDR register is read when the receive buffer is empty.	If reception has completed, then the received data is output to the bus. Otherwise, data received previously is output instead.	None
3	Serial transfer is started when transmit data is still not loaded on the shift register while the RSPI is used in slave mode.	• Serial transfer is suspended • Transmit/receive data is missing • The MISO signal output is disabled • RSPI function is disabled	Underrun error
4	Serial transfer terminates when the receive buffer is full.	• The contents of the receive buffer are kept. • Missing receive data.	Overrun error
5	An incorrect parity bit is received when performing full-duplex communications with the parity function enabled.	The parity error flag is set.	Parity error
6	The SSLA0 input signal is asserted when the serial transfer is idle in multi-master mode.	• Driving of the RSPCKA, MOSIA, SSLA1 to SSLA3 output signals is stopped. • RSPI function is disabled.	Mode fault error
7	The SSLA0 input signal is asserted during serial transfer in multi-master mode.	• Serial transfer is suspended. • Missing transmit/receive data. • Driving of the RSPCKA, MOSIA, SSLA1 to SSLA3 output signals is stopped. • RSPI function is disabled.	Mode fault error
8	The SSLA0 input signal is negated during serial transfer in slave mode.	• Serial transfer is suspended. • Missing transmit/receive data. • Driving of the MISOA output signal is stopped. • RSPI function is disabled.	Mode fault error

On operation 1 described in Table 31.7, the RSPI does not detect an error. To prevent data omission during the writing to the SPDR register, the SPDR register should be written when a transmit buffer empty interrupt request occurs or while the SPSR.SPTEF flag is 1.

Likewise, the RSPI does not detect an error on operation 2. To prevent extraneous data from being read, the SPDR register should be read when a receive buffer full interrupt request occurs or while the SPSR.SPRF flag is 1.

An underrun error shown in 3 is described in section 31.3.9.4, Underrun Error. An overrun error shown in 4 is described in section 31.3.9.1, Overrun Error. A parity error shown in 5 is described in section 31.3.9.2, Parity Error. A mode fault error shown in 6 to 8 is described in section 31.3.9.3, Mode Fault Error.

For the transmit and receive interrupts, refer to section 31.3.7, Transmit Buffer Empty/Receive Buffer Full Interrupts.

31.3.9.1 Overrun Error

If a serial transfer ends when the receive buffer of the SPDR register is full, the RSPI detects an overrun error, and sets the SPSR.OVRF flag to 1. When the OVRF flag is 1, the RSPI does not copy data from the shift register to the receive buffer so that the data prior to the occurrence of the error is retained in the receive buffer. To set the OVRF flag to 0, write 0 to the OVRF flag after the CPU has read the SPSR register with the OVRF flag set to 1.

Figure 31.27 shows an example of operations of the SPRF and OVRF flags. 'SPSR access' and 'SPDR access' shown in Figure 31.27 indicate the condition of accesses to the SPSR and SPDR registers, respectively, where 'W' denotes a write cycle, and 'R' a read cycle. In the example in Figure 31.27, the RSPI performs an 8-bit serial transfer in which the SPCMDm.CPHA bit is 1 and the SPCMDm.CPOL bit is 0. The numbers given under the RSPCKA waveform represent the number of RSPCK cycles (i.e., the number of transferred bits).

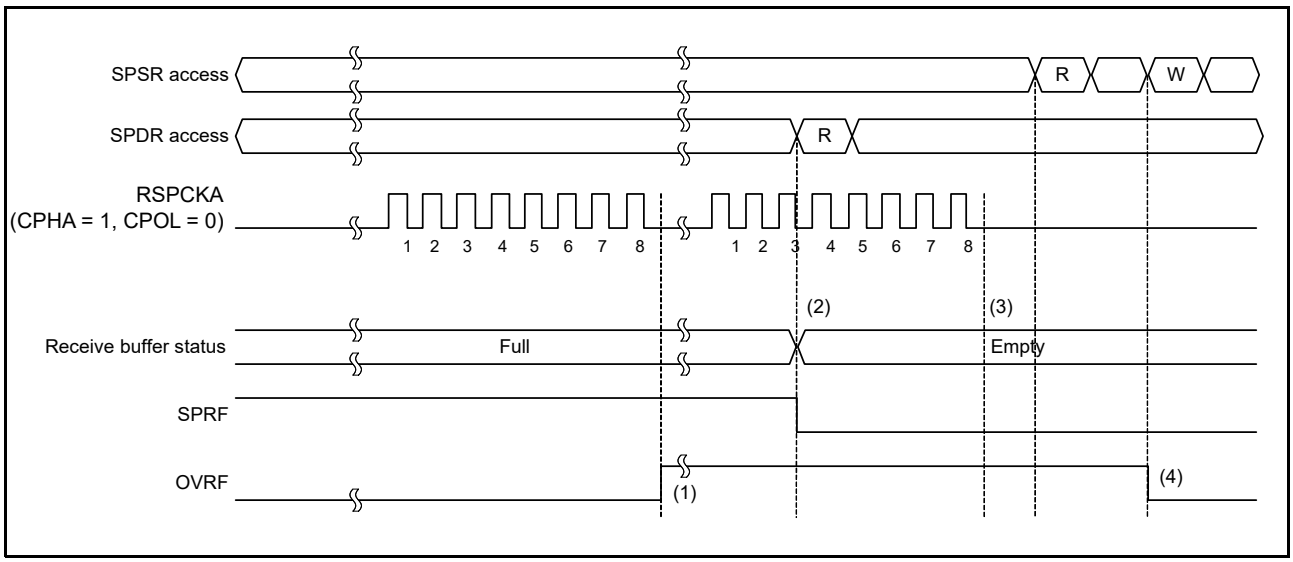

Figure 31.27 Operation Example of the SPRF and OVRF Flags

The operation of the flags at the timing shown in steps (1) to (4) in the figure is described below.

(1) If a serial transfer terminates with the receive buffer full (the SPRF flag is 1), the RSPI detects an overrun error, and sets the OVRF flag to 1. The RSPI does not copy the data in the shift register to the receive buffer. Even if the SPPE bit is 1, parity errors are not detected. In master mode, the RSPI copies the pointer value to the SPCMDm register to the SPSSR.SPECM[2:0] bits.

(2) When the SPDR register is read, the RSPI outputs the data in the receive buffer. At this time the SPRF flag becomes 0. Even if the receive buffer becomes empty, the OVRF flag does not become 0.

(3) If the serial transfer ends with the OVRF flag being 1 (an overrun error occurs), the RSPI does not copy the data in the shift register to the receive buffer (the SPRF flag remains 0). A receive buffer full interrupt is not generated. Even if the SPPE bit is 1, parity errors are not detected. When in master mode, the RSPI does not update the SPSSR.SPECM[2:0] bits. When in an overrun error state and the RSPI does not copy the received data from the shift register to the receive buffer, upon termination of the serial transfer, the RSPI determines that the shift register is empty; in this manner, data transfer from the transmit buffer to the shift register is enabled.

(4) If 0 is written to the OVRF flag after the SPSR register is read when the OVRF flag is 1, the OVRF flag is set to 0.

The occurrence of an overrun can be checked either by reading the SPSR register or by using an error interrupt and reading the SPSR register. When executing a serial transfer, measures should be taken to ensure the early detection of overrun errors, such as reading the SPSR register immediately after the SPDR register is read. When the RSPI is used in master mode, the pointer value to the SPCMDm register at the occurrence of the error can be checked by reading the SPSSR.SPECM[2:0] bits.

If an overrun error occurs and the OVRF flag is set to 1, normal reception operations cannot be performed until the OVRF flag is set to 0.

When the RSPCK auto-stop function is enabled in master mode, an overrun error does not occur. Figure 31.28 and Figure 31.29 show the clock stop waveform when a serial transfer continues while the receive buffer is full in master mode.

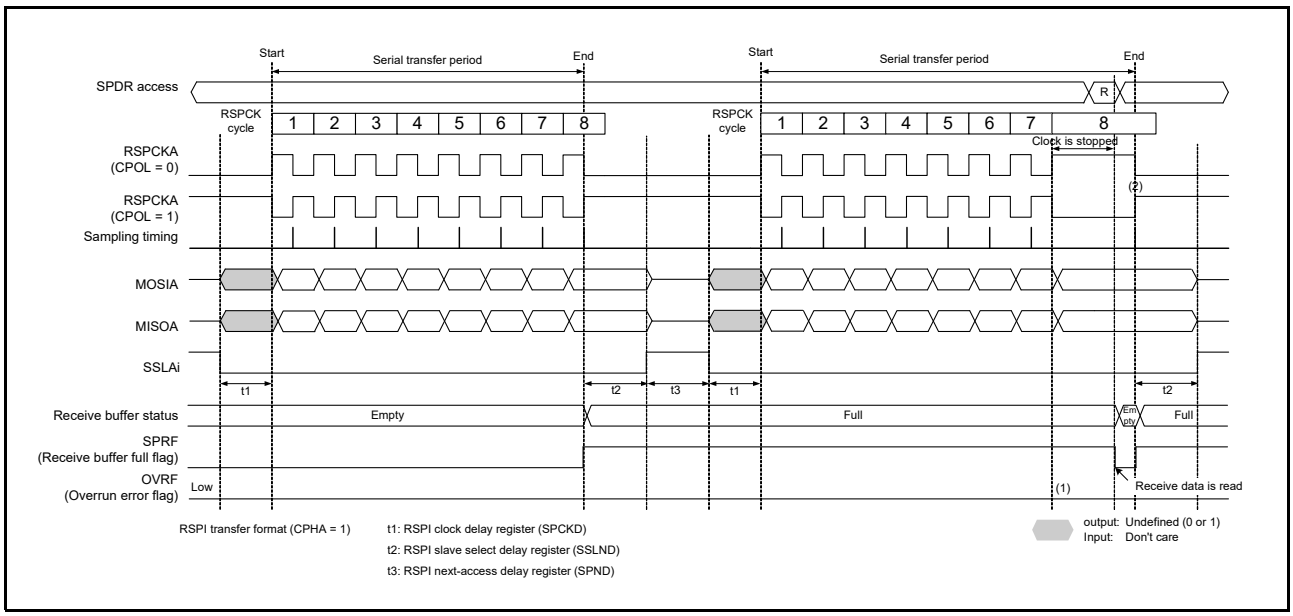

Figure 31.28 Clock Stop Waveform When a Serial Transfer Continues While the Receive Buffer is Full in Master Mode (CPHA = 1)

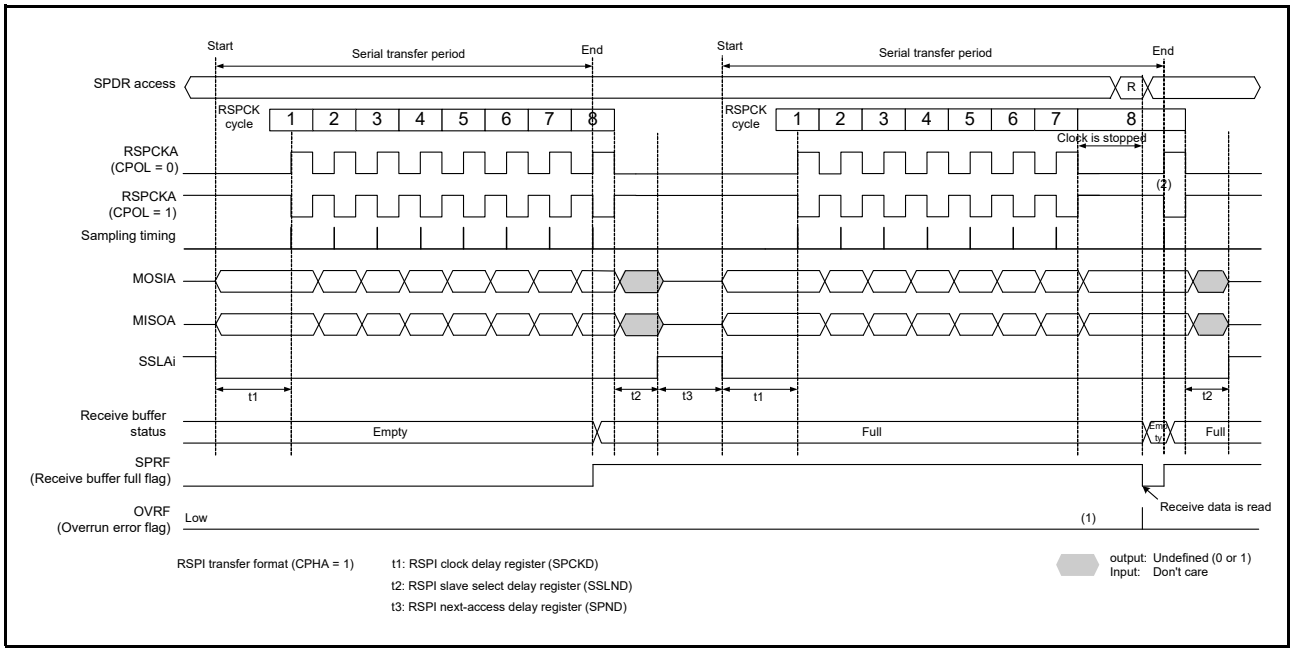

Figure 31.29 Clock Stop Waveform When a Serial Transfer Continues While the Receive Buffer is Full in Master Mode (CPHA = 0)

The operation of the flags at the timings shown in steps (1) and (2) in the figure is described below.

(1) When the receive buffer is full, an overrun error does not occur because the RSPCK clock is stopped.

(2) If the SPDR register is read while the clock is stopped, data in the receive buffer can be read. The RSPCK clock restarts after reading the receive buffer (after the SPRF flag becomes 0).

31.3.9.2 Parity Error

If full-duplex communication is performed with the SPCR.TXMD bit set to 0 and the SPCR2.SPPE bit set to 1, when serial transfer ends, the RSPI checks whether there are parity errors. Upon detecting a parity error in the received data, the RSPI sets the SPSR.PERF flag to 1. Since the RSPI does not copy the data in the shift register to the receive buffer when the SPSR.OVRF flag is set to 1, parity error detection is not performed for the received data. To set the PERF flag to 0, write 0 to the PERF flag after the SPSR register is read with the PERF flag set to 1.
Figure 31.30 shows an example of operation of the OVRF and PERF flags. 'SPSR access' shown in Figure 31.30 indicates the condition of access to the SPSR register, where 'W' denotes a write cycle, and 'R' a read cycle. In the example of Figure 31.30, full-duplex communication is performed while the SPCR.TXMD bit is 0 and the SPCR2.SPPE bit is 1. The RSPI performs an 8-bit serial transfer in which the SPCMDm.CPHA bit is 1 and the SPCMDm.CPOL bit is 0. The numbers given under the RSPCKA waveform represent the number of RSPCK cycles (i.e., the number of transferred bits).

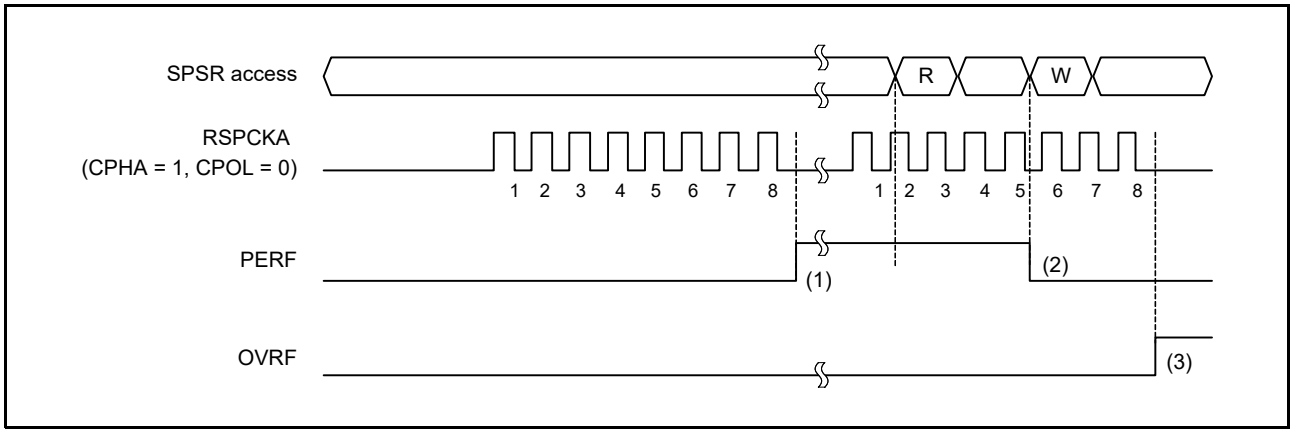

Figure 31.30 Operation Example of PERF Flag

The operation of the flags at the timing shown in steps (1) to (3) in the figure is described below.

(1) If a serial transfer terminates with the RSPI not detecting an overrun error, the RSPI copies the data in the shift register to the receive buffer. The RSPI judges the received data at this timing, and sets the PERF flag to 1 if a parity error is detected. In master mode, the RSPI copies the pointer value to the SPCMDm register to the SPSSR.SPECM[2:0] bits.

(2) If 0 is written to the PERF flag after the SPSR register is read when the PERF flag is 1, the PERF flag is set to 0.

(3) When the RSPI detects an overrun error and serial transfer is terminated, the data in the shift register is not copied to the receive buffer. The RSPI does not perform parity error detection at this timing.

The occurrence of a parity error can be checked either by reading the SPSR register or by using an error interrupt and reading the SPSR register. When executing a serial transfer, measures should be taken to ensure the early detection of parity errors, such as reading the SPSR register. When the RSPI is used in master mode, the pointer value to the SPCMDm register at the occurrence of the error can be checked by reading the SPSSR.SPECM[2:0] bits.

31.3.9.3 Mode Fault Error

The RSPI operates in multi-master mode when the SPCR.MSTR bit is 1, the SPCR.SPMS bit is 0, and the SPCR.MODFEN bit is 1. If the active level is input with respect to the SSLA0 input signal of the RSPI in multi-master mode, the RSPI detects a mode fault error irrespective of the status of the serial transfer, and sets the SPSR.MODF flag to 1. Upon detecting the mode fault error, the RSPI copies the value of the pointer to the SPCMDm register to the SPSSR.SPECM[2:0] bits. The active level of the SSLA0 signal is determined by the SSLP.SSL0P bit.
When the MSTR bit is 0, the RSPI operates in slave mode. The RSPI detects a mode fault error if the MODFEN bit of the RSPI in slave mode is 1, and the SPMS bit is 0, and if the SSLA0 input signal is negated during the serial transfer period (from the time the driving of valid data is started to the time the final valid data is fetched).
Upon detecting a mode fault error, the RSPI stops driving of the output signals and clears the SPCR.SPE bit to 0 (refer to section 31.3.10, Initializing RSPI). In the case of multi-master configuration, detection of a mode fault error is used to stop driving of the output signals and the RSPI function, which allows the master right to be released.
The occurrence of a mode fault error can be checked either by reading the SPSR register or by using an error interrupt and reading the SPSR register. Detecting mode fault errors without utilizing the error interrupt requires polling of the SPSR register. When using the RSPI in master mode, the pointer value to the SPCMDm register at the occurrence of the error can be checked by reading the SPSSR.SPECM[2:0] bits.
When the MODF flag is 1, writing of the value 1 to the SPE bit is ignored by the RSPI. To enable the RSPI function after the detection of a mode fault error, set the MODF flag to 0. When setting the MODF flag to 0, the SPE bit becomes 1.

31.3.9.4 Underrun Error

If a serial transfer is started when the SPCR.SPE bit is 1 (RSPI function is enabled) and transmit data is still not loaded on the shift register while RSPI operates in slave mode (the SPCR.MSTR bit is 0), the RSPI detects an underrun error, and sets the SPSR.MODF and SPSR.UDRF flags to 1. Upon detecting an underrun error, the RSPI stops driving of the output signals and clears the SPCR.SPE bit to 0. Clearing of the SPE bit disables the RSPI function. (Refer to section 31.3.10, Initializing RSPI). The occurrence of an underrun error can be checked either by reading the SPSR register or by using an error interrupt and reading the SPSR register. Detecting underrun errors without utilizing the error interrupt requires polling of the SPSR register. When the MODF flag is 1, writing of the value 1 to the SPE bit is ignored by the RSPI. To enable the RSPI function after the detection of an underrun error, set the MODF flag to 0. When setting the MODF flag to 0, the SPE bit becomes 1.

31.3.10 Initializing RSPI

If 0 is written to the SPCR.SPE bit or the RSPI sets the SPE bit to 0 because of the detection of a mode fault error or an underrun error, the RSPI disables the RSPI function, and initializes some of the module functions. When a system reset is generated, the RSPI initializes all of the module functions. The following describes initialization by the clearing of the SPCR.SPE bit and initialization by a system reset.

31.3.10.1 Initialization by Clearing the SPE Bit

When the SPCR.SPE bit is set to 0, the RSPI performs the following initialization:

- Aborting the transmission and reception that is being executed
- Stopping the driving of output signals (Hi-Z) in slave mode
- Initializing the internal state of the RSPI
- Initializing the transmit buffer of the RSPI (Set the SPTEF flag to 1)

Initialization by the clearing of the SPE bit does not initialize the control bits of the RSPI. For this reason, the RSPI can be started in the same transfer mode as prior to the initialization if the SPE bit is set to 1 again.
The SPSR.SPRF, UDRF, PERF, MODF, and OVRF flags are not initialized, nor is the value of the RSPI sequence status register (SPSSR) initialized. For this reason, even after the RSPI is initialized, data from the receive buffer can be read and the status of error occurrence during the RSPI transfer can be checked.
The transmit buffer is initialized to an empty state (the SPTEF flag is 1). Therefore, if the SPCR.SPTIE bit is set to 1 after RSPI initialization, a transmit buffer empty interrupt is generated. When the RSPI is initialized, in order to disable any transmit buffer empty interrupt, 0 should be written to the SPTIE bit simultaneously with the writing of 0 to the SPE bit.

31.3.10.2 System Reset

The initialization by a system reset completely initializes the RSPI through the initialization of all bits for controlling the RSPI, initialization of the status bits, and initialization of data registers, in addition to the requirements described in section 31.3.10.1, Initialization by Clearing the SPE Bit.

31.3.11 SPI Operation

31.3.11.1 Master Mode Operation

The only difference between single-master mode operation and multi-master mode operation lies in mode fault error detection (refer to section 31.3.9, Error Detection). When operating in single-master mode, the RSPI does not detect mode fault errors whereas the RSPI running in multi-master mode does detect mode fault errors. This section explains operations that are common to single-master mode and multi-master mode.

(1) Starting a Serial Transfer

The RSPI updates the data in the transmit buffer (SPTX) when data is written to the RSPI data register (SPDR) with the RSPI transmit buffer being empty (the SPTEF flag is 1 and data for the next transfer is not set). When the shift register is empty after the number of frames set in the SPDCR.SPFC[1:0] bits are written to the SPDR register, the RSPI copies data from the transmit buffer to the shift register and starts serial transfer. Upon copying transmit data to the shift register, the RSPI changes the status of the shift register to “full”, and upon termination of serial transfer, it changes the status of the shift register to “empty”. The status of the shift register cannot be referenced.
For details on the RSPI transfer format, refer to section 31.3.5, Transfer Format. The polarity of the SSLAi output pins depends on the SSLP register settings.

(2) Terminating a Serial Transfer

Irrespective of the SPCMDm.CPHA bit, the RSPI terminates the serial transfer after transmitting an RSPCKA edge corresponding to the final sampling timing. If free space is available in the receive buffer (SPRX) (the SPRF flag is 0), upon termination of serial transfer, the RSPI copies data from the shift register to the receive buffer of the SPDR register. It should be noted that the final sampling timing varies depending on the bit length of transfer data. In master mode, the RSPI data length depends on the SPCMDm.SPB[3:0] bit setting. The polarity of the SSLAi output pin depends on the SSLP register settings.
For details on the RSPI transfer format, refer to section 31.3.5, Transfer Format.

(3) Sequence Control

The transfer format that is employed in master mode is determined by the SPSCR, SPCMDm, SPBR, SPCKD, SSLND, and SPND registers.

The SPSCR register is a register used to determine the sequence configuration for serial transfers that are executed by the RSPI in master mode. The following items are set in the SPCMDm register: SSLAi pin output signal value, MSB/LSB first, data length, some of the bit rate settings, RSPCK polarity/phase, whether the SPCKD register is to be referenced, whether the SSLND register is to be referenced, and whether the SPND register is to be referenced. The SPBR register holds some of the bit rate settings; the SPCKD register, an RSPI clock delay value; the SSLND register, an SSL negation delay; and the SPND register, a next-access delay value.

According to the sequence length that is assigned to the SPSCR register, the RSPI makes up a sequence comprised of a part or all of the SPCMDm register. The RSPI contains a pointer to the SPCMDm register that makes up the sequence. The value of this pointer can be checked by reading the SPSSR.SPCP[2:0] bits. When the SPCR.SPE bit is set to 1 and the RSPI function is enabled, the RSPI loads the pointer to the commands in the SPCMD0 register, and incorporates the SPCMD0 settings into the transfer format at the beginning of serial transfer. The RSPI increments the pointer each time the next-access delay period for a data transfer ends. Upon completion of the serial transfer that corresponds to the final command comprising the sequence, the RSPI sets the pointer in the SPCMD0 register, and in this manner the sequence is executed repeatedly.

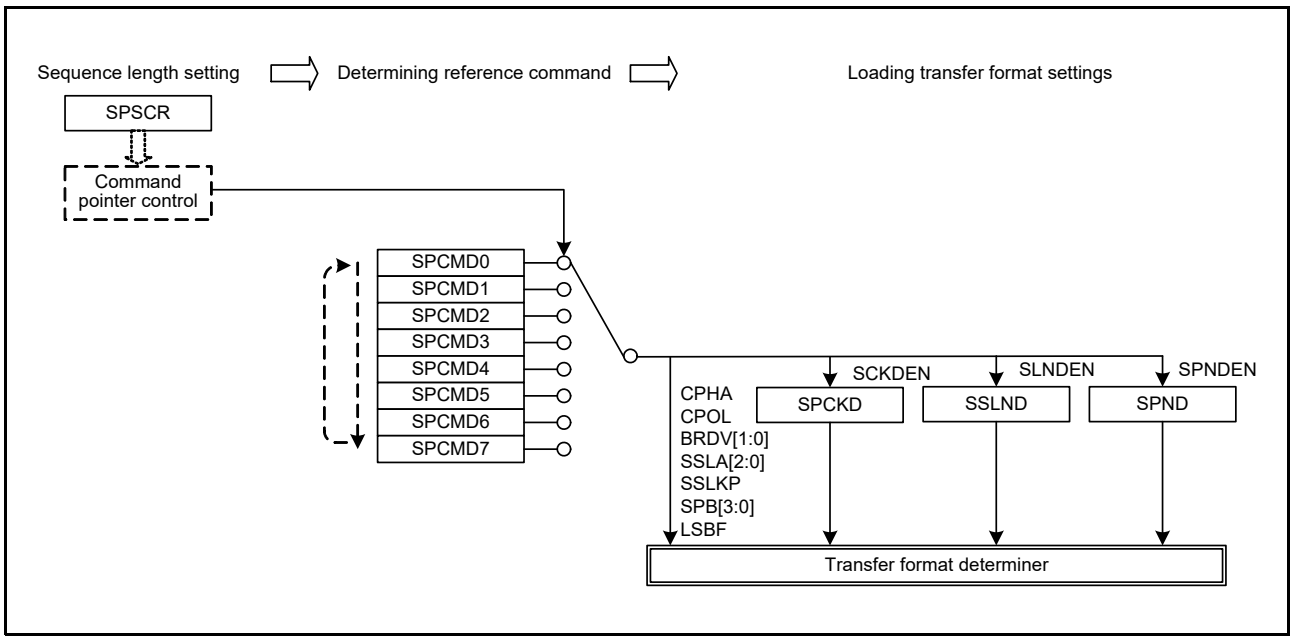

Figure 31.31 Procedure for Determining the Form of Serial Transfer in Master Mode

In this section, a frame is the combination of the data (SPDR) and the settings (SPCMDm).

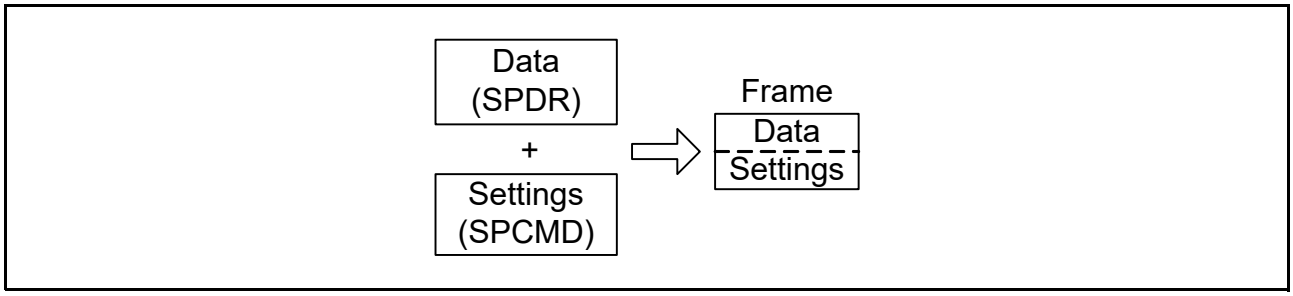

Figure 31.32 Concept of a Frame

Figure 31.33 shows the relationship between the command and the transmit and receive buffers in the sequence of operations specified by the settings in Table 31.4.

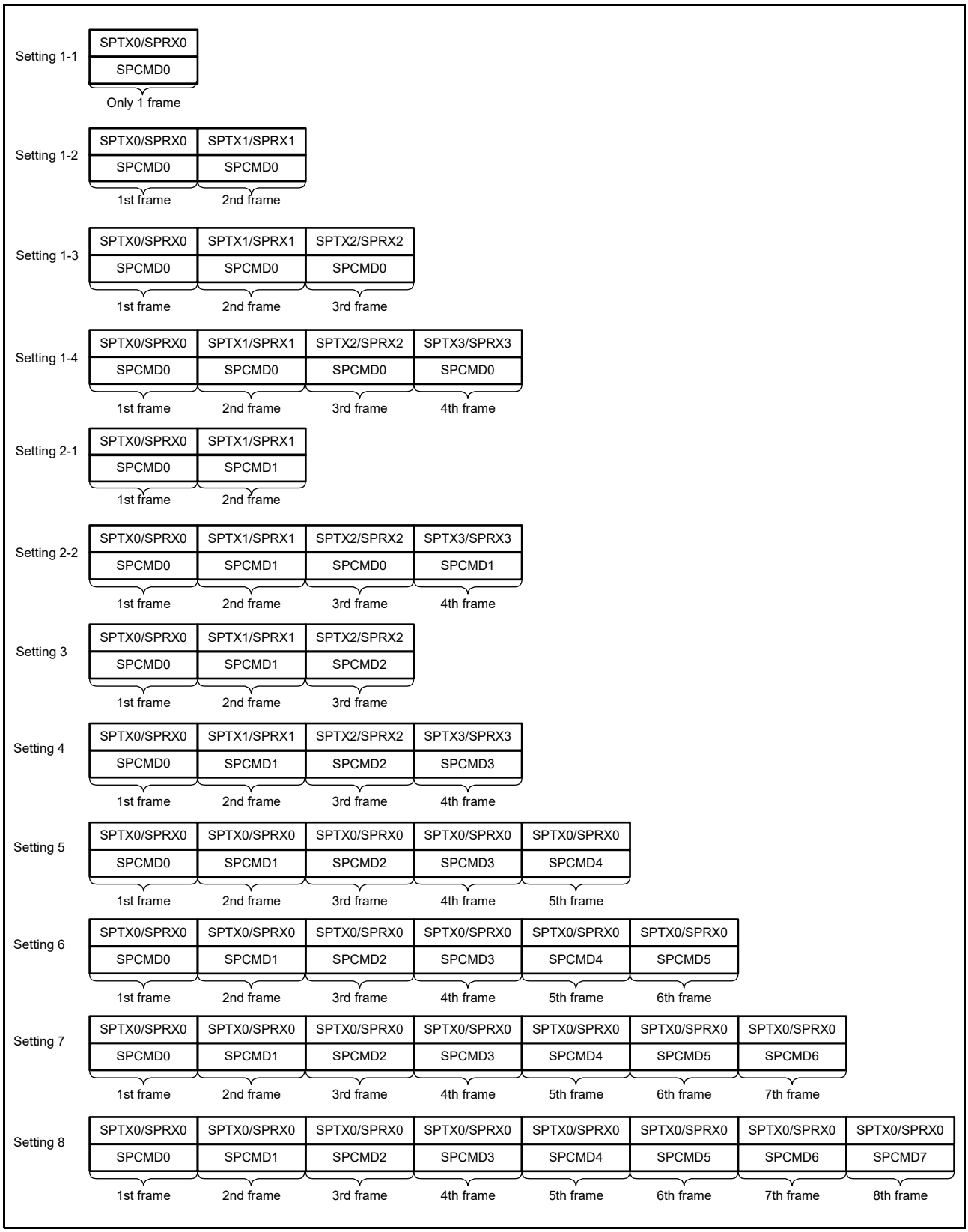

Figure 31.33 Correspondence between the RSPI Command Register and Transmit/Receive Buffers in Sequence Operations

(4) Burst Transfer

If the SPCMDm.SSLKP bit that the RSPI references during the current serial transfer is 1, the RSPI keeps the SSLAi signal level during the serial transfer until the beginning of the SSLAi signal assertion for the next serial transfer. If the SSLAi signal level for the next serial transfer is the same as the SSLAi signal level for the current serial transfer, the RSPI can execute continuous serial transfers while keeping the SSLAi signal assertion status (burst transfer).
Figure 31.34 shows an example of an SSLAi signal operation for the case where a burst transfer is implemented using SPCMD0 and SPCMD1 register settings. The text below explains the RSPI operations (1) to (7) as shown in Figure 31.34. It should be noted that the polarity of the SSLAi output signal depends on the SSLP register settings.

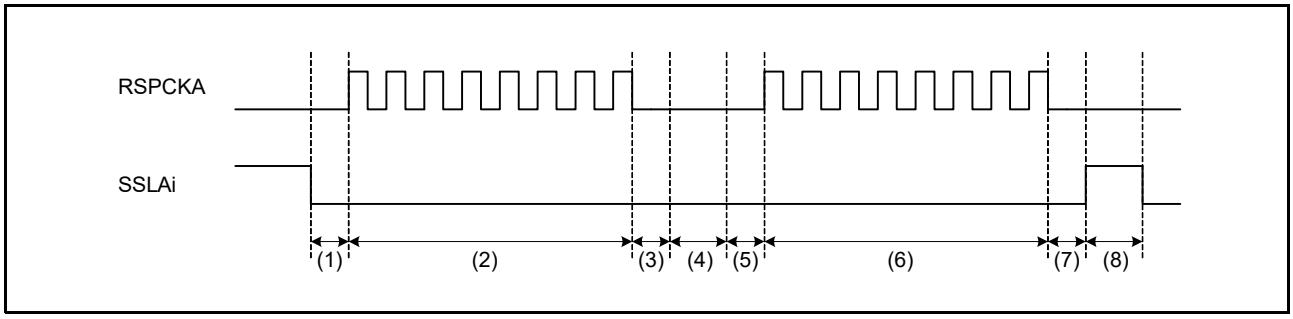

Figure 31.34 Example of Burst Transfer Operation Using SSLKP Bit (CPHA = 1, CPOL = 0)

(1) Based on the SPCMD0 register, the RSPI asserts the SSLAi signal and inserts RSPCK delays.
(2) The RSPI executes serial transfers according to the SPCMD0 register.
(3) The RSPI inserts SSL negation delays.
(4) Since the SPCMD0.SSLKP bit is 1, the RSPI keeps the SSLAi signal value on the SPCMD0 register. This period is sustained, at the shortest, for a period equal to the next-access delay of the SPCMD0 register. If the shift register is empty after the passage of a minimum period, this period is sustained until the transmit data is stored in the shift register for the next transfer.
(5) Based on the SPCMD1 register, the RSPI inserts RSPCK delays.
(6) The RSPI executes serial transfers according to the SPCMD1 register.
(7) The RSPI inserts SSL negation delays.
(8) Because the SPCMD1.SSLKP bit is 0, the RSPI negates the SSLAi signal. In addition, a next-access delay is inserted according to the SPCMD1 register.

If the SSLAi signal output settings in the SPCMDm register in which 1 is assigned to the SSLKP bit are different from the SSLAi signal output settings in the SPCMDm register to be used in the next transfer, the RSPI switches the SSLAi signal status to SSLAi signal assertion ((5) in Figure 31.34) corresponding to the command for the next transfer. Note that if such an SSLAi signal switching occurs, the slaves that drive the MISOA signal compete, and collision of signal levels may occur.
The RSPI in master mode references the SSLAi signal operation within the module for the case where the SSLKP bit is not used. Even when the SPCMDm.CPHA bit is 0, the RSPI can accurately start serial transfers by using the SSLAi signal assertion for the next transfer that is detected internally.

(5) RSPCK Delay (t1)

The RSPCK delay value in master mode depends on the SPCMDm.SCKDEN bit setting and the SPCKD register setting. The RSPI determines the SPCMDm register to be referenced during serial transfer by pointer control, and determines an RSPCK delay value during serial transfer by using the SPCMDm.SCKDEN bit and the SPCKD register, as listed in Table 31.8. For a definition of RSPCK delay, refer to section 31.3.5, Transfer Format.

Table 31.8 Relationship among SCKDEN Bit, SPCKD, and RSPCK Delay Value

SPCMDm.SCKDEN Bit	SPCKD.SCKDL[2:0] Bits	RSPCK Delay Value
0	000b to 111b	1 RSPCK
1	000b	1 RSPCK
	001b	2 RSPCK
	010b	3 RSPCK
	011b	4 RSPCK
	100b	5 RSPCK
	101b	6 RSPCK
	110b	7 RSPCK
	111b	8 RSPCK

(6) SSL Negation Delay (t2)

The SSL negation delay value in master mode depends on the SPCMDm.SLNDEN bit setting and the SSLND register setting. The RSPI determines the SPCMDm register to be referenced during serial transfer by pointer control, and determines an SSL negation delay value during serial transfer by using the SPCMDm.SLNDEN bit and the SSLND register, as listed in Table 31.9. For a definition of SSL negation delay, refer to section 31.3.5, Transfer Format.

Table 31.9 Relationship among SLNDEN Bit, SSLND, and SSL Negation Delay Value

SPCMDm.SLNDEN Bit	SSLND.SLNDL[2:0] Bits	SSL Negation Delay Value
0	000b to 111b	1 RSPCK
1	000b	1 RSPCK
	001b	2 RSPCK
	010b	3 RSPCK
	011b	4 RSPCK
	100b	5 RSPCK
	101b	6 RSPCK
	110b	7 RSPCK
	111b	8 RSPCK

(7) Next-Access Delay (t3)

The next-access delay value in master mode depends on the SPCMDm.SPNDEN bit setting and the SPND setting. The RSPI determines the SPCMDm register to be referenced during serial transfer by pointer control, and determines a next-access delay value during serial transfer by using the SPCMDm.SPNDEN bit and SPND, as listed in Table 31.10. For a definition of next-access delay, refer to section 31.3.5, Transfer Format.

Table 31.10 Relationship among SPNDEN Bit, SPND, and Next-Access Delay Value

SPCMDm.SPNDEN Bit	SPND.SPNDL[2:0] Bits	Next-Access Delay Value
0	000b to 111b	1 RSPCK + 2 PCLK
1	000b	1 RSPCK + 2 PCLK
	001b	2 RSPCK + 2 PCLK
	010b	3 RSPCK + 2 PCLK
	011b	4 RSPCK + 2 PCLK
	100b	5 RSPCK + 2 PCLK
	101b	6 RSPCK + 2 PCLK
	110b	7 RSPCK + 2 PCLK
	111b	8 RSPCK + 2 PCLK

(8) Initialization Flowchart

Figure 31.35 is a flowchart illustrating an example of initialization in SPI operation when the RSPI is used in master mode. For a description of how to set up the interrupt controller, DMAC, and I/O ports, refer to the descriptions given in the individual blocks.

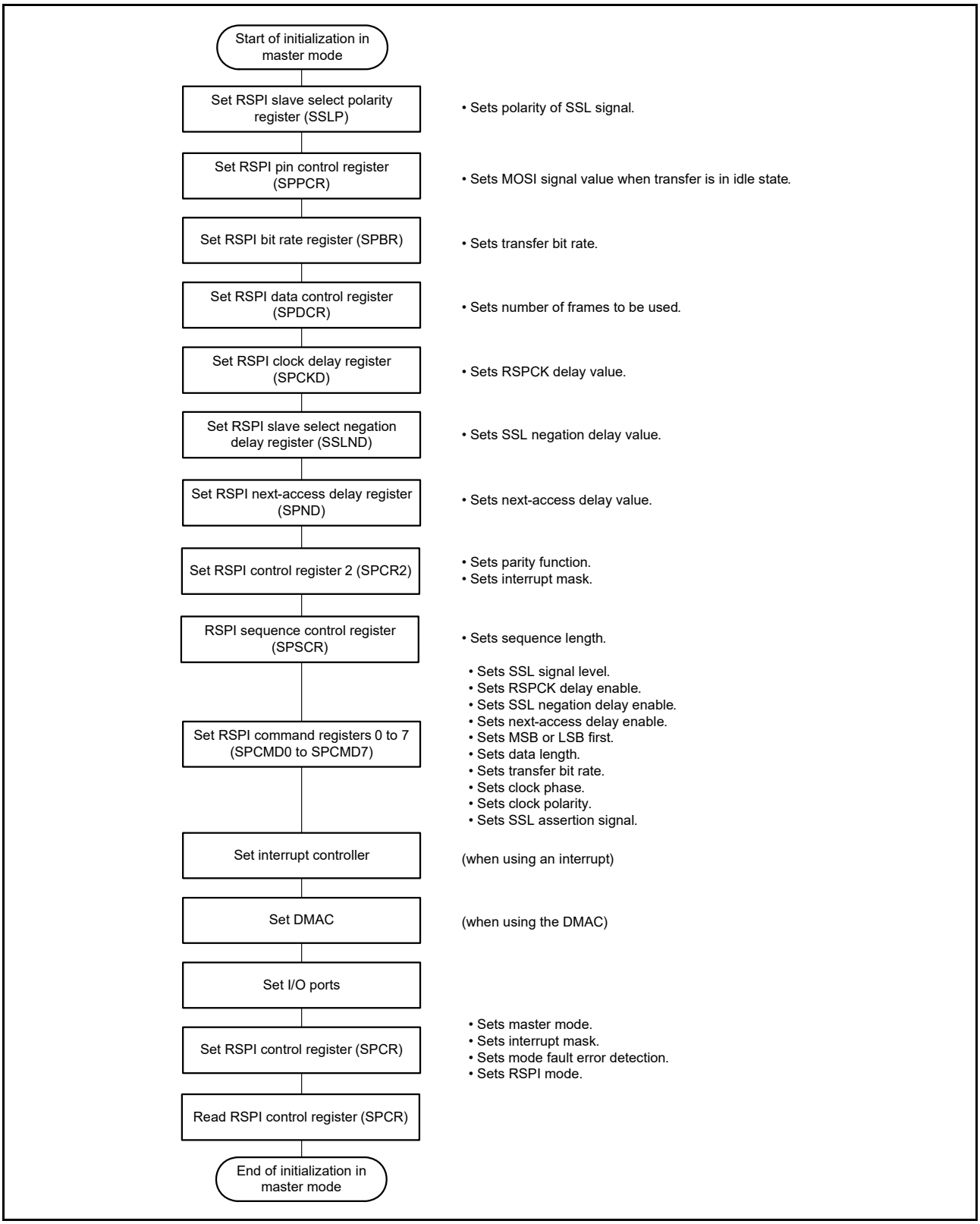

Figure 31.35 Example of Initialization Flowchart in Master Mode (SPI Operation)

(9) Software Processing Flow

Figure 31.36 to Figure 31.38 show examples of the flow of software processing.

(a) Transmit Processing Flow

When transmitting data, the CPU will be notified of the completion of data transmission by enabling the SPII interrupt after the last writing of data for transmission.

The completion of data transmission can also be checked by polling to see if the SPSR.IDLNF flag has become 0, instead of using the SPII interrupt. However, one cycle of PCLK is required for the time from when data for transmission is written in the SPDR register to when the IDLNF flag becomes 1. After the last data is written in the SPDR register, discard the value of the SPSR register once not to judge the condition with the IDLNF flag which has not yet become 1, and read and use the value of the IDLNF flag to confirm the completion of data transmission.

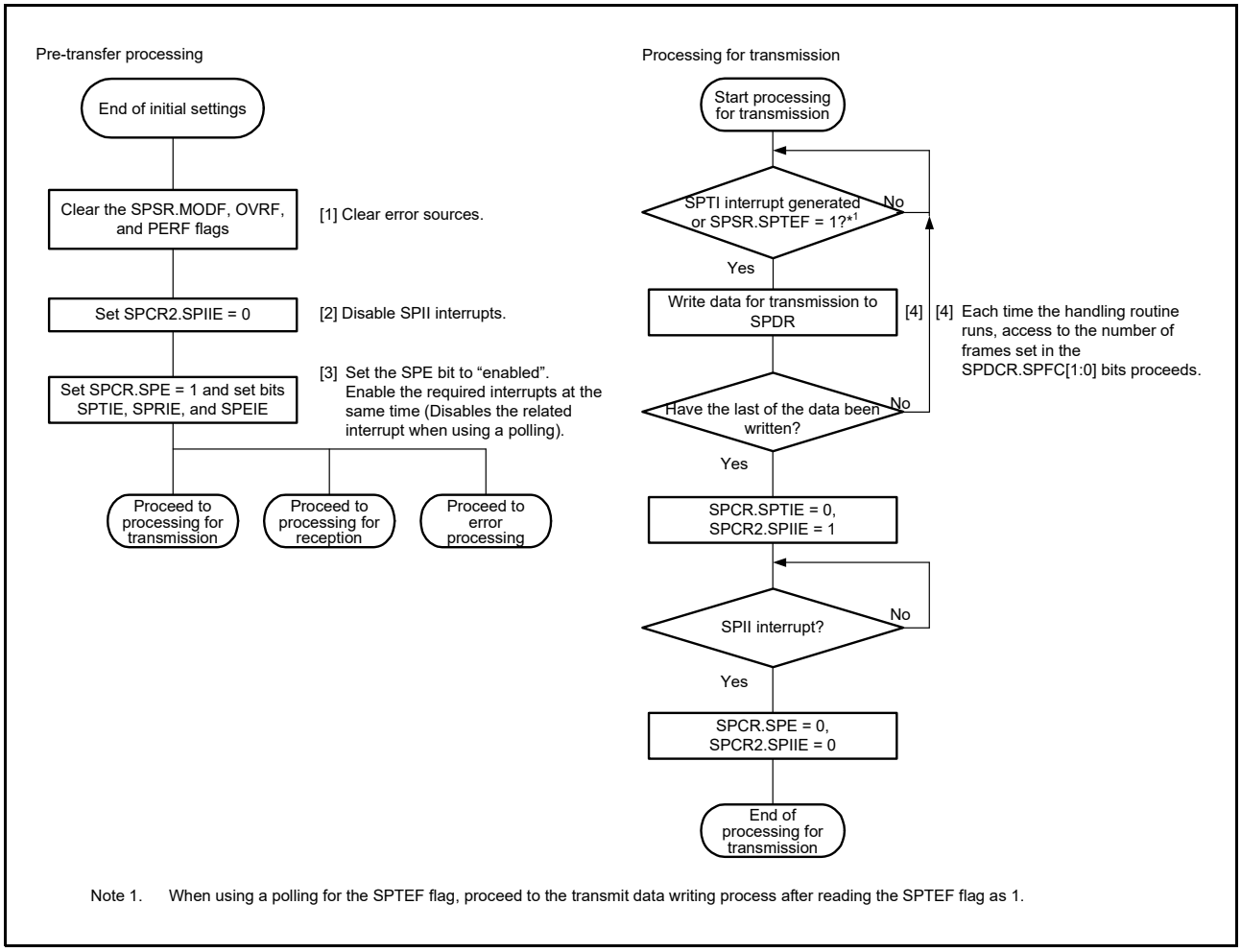

Note 1. When using a polling for the SPTEF flag, proceed to the transmit data writing process after reading the SPTEF flag as 1.

Figure 31.36 Flowchart in Master Mode (Transmission)

(b) Receive Processing Flow

The RSPI does not support receive-only simplex communications, so processing for transmission is required.

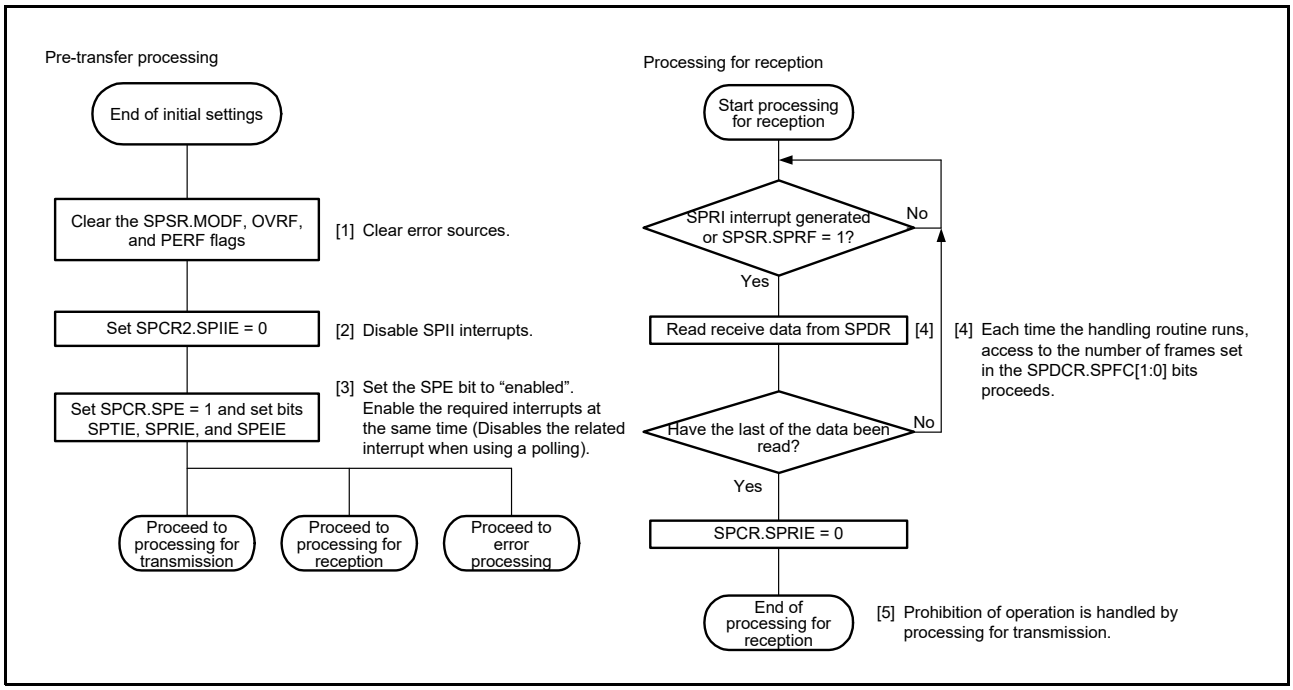

Figure 31.37 Flowchart in Master Mode (Reception)

(c) Flow of Error Processing

When a mode fault error is generated, the SPCR.SPE bit is automatically cleared, stopping operations for transmission and reception. For errors from other sources, however, the SPCR.SPE bit is not cleared and operations for transmission and reception continue; accordingly, we recommend clearing of the SPCR.SPE bit to stop operations in the case of errors other than mode fault errors. Not doing so will lead to updating of the SPSSR.SPECM[2:0] bits.
When interrupts are used and an error occurs, if the ICU.IRn.IR flag for the SPTI or SPRI interrupt request is set to 1, clear the ICU.IRn.IR flag in the error processing routine. If the SPRI interrupt request is indicated, read the receive buffer and initialize the sequencer in the RSPI.

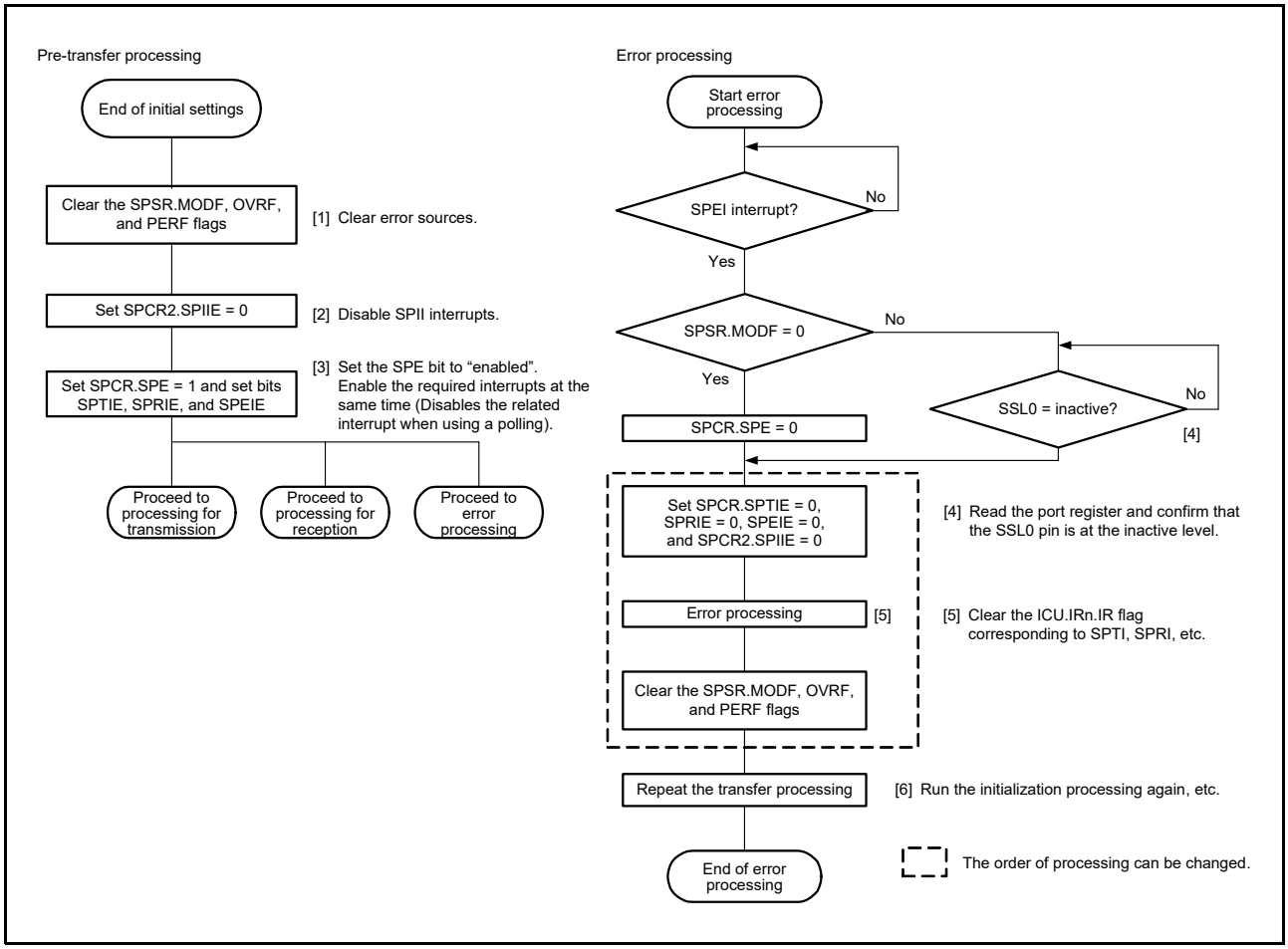

Figure 31.38 Flowchart for Master Mode (Error Processing)

31.3.11.2 Slave Mode Operation

(1) Starting a Serial Transfer

If the SPCMD0.CPHA bit is 0, when detecting an SSLA0 input signal assertion, the RSPI needs to start driving valid data to the MISOA output signal. For this reason, when the CPHA bit is 0, the assertion of the SSLA0 input signal triggers the start of a serial transfer.
If the CPHA bit is 1, when detecting the first RSPCKA edge in an SSLA0 signal asserted condition, the RSPI needs to start driving valid data to the MISOA output signal. For this reason, when the CPHA bit is 1, the first RSPCKA edge in an SSLA0 signal asserted condition triggers the start of a serial transfer.
Irrespective of the CPHA bit setting, the timing at which the RSPI starts driving of the MISOA output signal is the SSLA0 signal assertion timing. The data which is output by the RSPI is either valid or invalid, depending on the CPHA bit setting.
For details on the RSPI transfer format, refer to section 31.3.5, Transfer Format. The polarity of the SSLA0 input signal depends on the setting of the SSLP.SSL0P bit.

(2) Terminating a Serial Transfer

Irrespective of the SPCMD0.CPHA bit, the RSPI terminates the serial transfer after detecting an RSPCKA edge corresponding to the final sampling timing. When free space is available in the receive buffer (the SPRF flag is 0), upon termination of serial transfer the RSPI copies received data from the shift register to the receive buffer of the SPDR register. Upon termination of a serial transfer the RSPI changes the status of the shift register to “empty”, regardless of the receive buffer state. A mode fault error occurs if the RSPI detects an SSLA0 input signal negation from the beginning of serial transfer to the end of serial transfer (refer to section 31.3.9, Error Detection).
The final sampling timing changes depending on the bit length of transfer data. In slave mode, the RSPI data length depends on the SPCMD0.SPB[3:0] bit setting. The polarity of the SSLA0 input signal depends on the SSLP.SSL0P bit setting.
For details on the RSPI transfer format, refer to section 31.3.5, Transfer Format.

(3) Notes on Single-Slave Operations

If the SPCMD0.CPHA bit is 0, the RSPI starts serial transfers when it detects the assertion edge for an SSLA0 input signal. In the type of configuration shown in Figure 31.7 as an example, if the RSPI is used in single-slave mode, the SSLA0 signal is fixed at the active state. Therefore, when the CPHA bit is set to 0, the RSPI cannot correctly start a serial transfer. To correctly execute transmit/receive operations by the RSPI in slave mode in a configuration in which the SSLA0 input signal is fixed at the active state, the CPHA bit should be set to 1. If there is a need for setting the CPHA bit to 0, the SSLA0 input signal should not be fixed.

(4) Burst Transfer

If the SPCMD0.CPHA bit is 1, continuous serial transfer (burst transfer) can be executed while retaining the assertion state for the SSLA0 input signal. If the CPHA bit is 1, the period from the first RSPCKA edge to the sampling timing for the reception of the final bit in an SSLA0 signal active state corresponds to a serial transfer period. Even when the SSLA0 input signal remains at the active level, the RSPI can accommodate burst transfers because it can detect the start of an access.

If the CPHA bit is 0, the second and subsequent serial transfers during burst transfer cannot be executed correctly.

(5) Initialization Flowchart

Figure 31.39 is a flowchart illustrating an example of initialization in SPI operation when the RSPI is used in slave mode. For a description of how to set up the interrupt controller, DMAC, and I/O ports, refer to the descriptions given in the individual blocks.

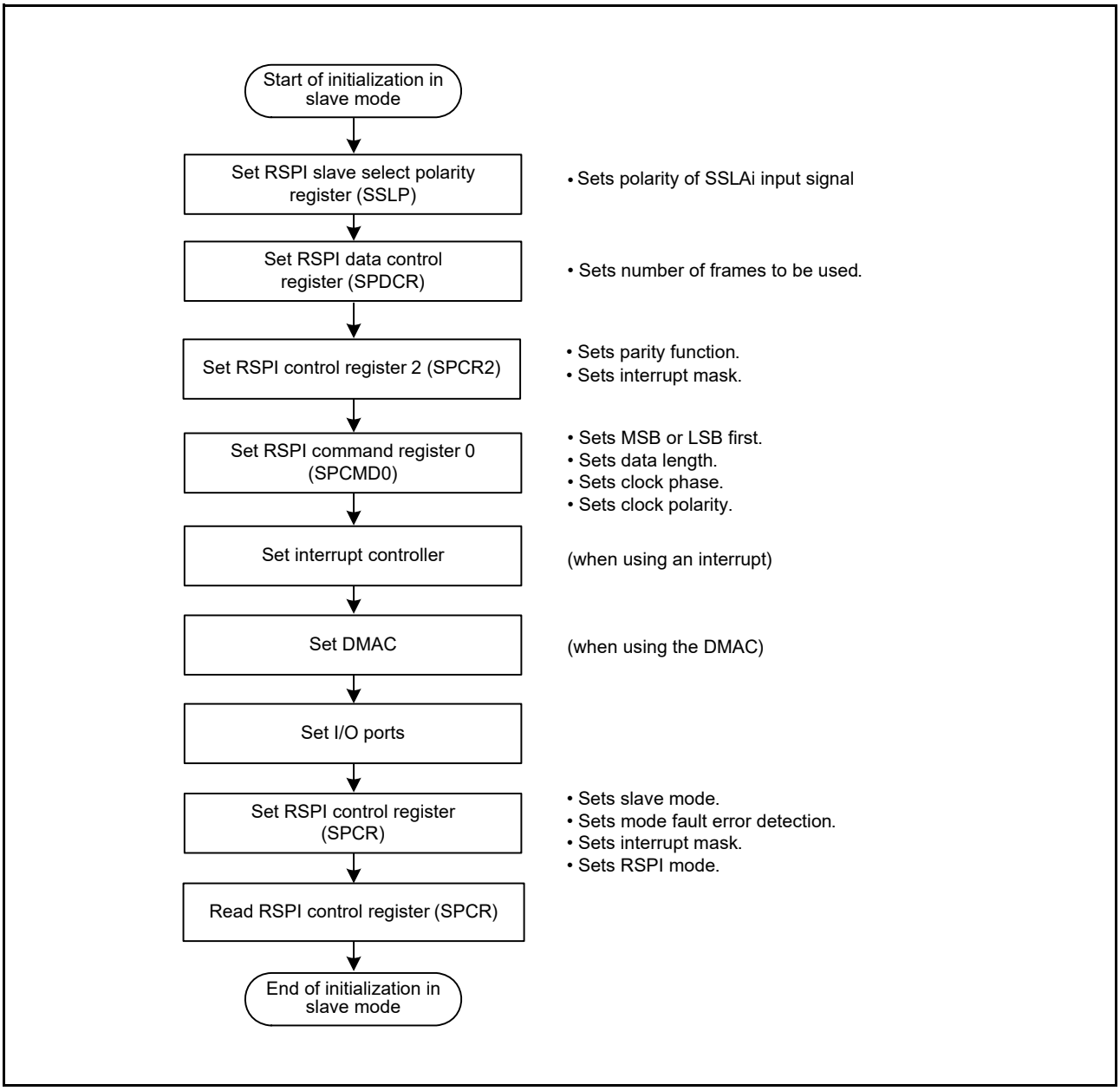

Figure 31.39 Example of Initialization Flowchart in Slave Mode (SPI Operation)

(6) Software Processing Flow

Figure 31.40 to Figure 31.42 show examples of the flow of software processing.

(a) Transmit Processing Flow

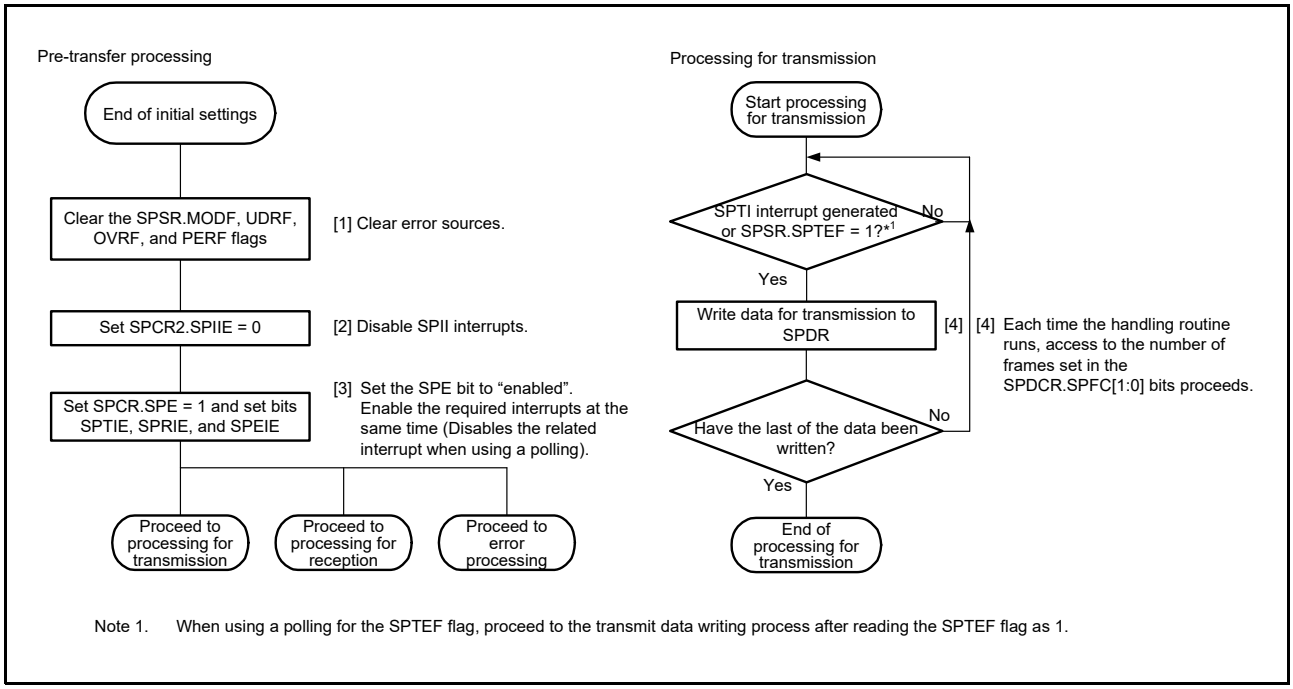

Figure 31.40 Flowchart in Slave Mode (Transmission)

(b) Receive Processing Flow

The RSPI does not support receive-only simplex communications, so processing for transmission is required.

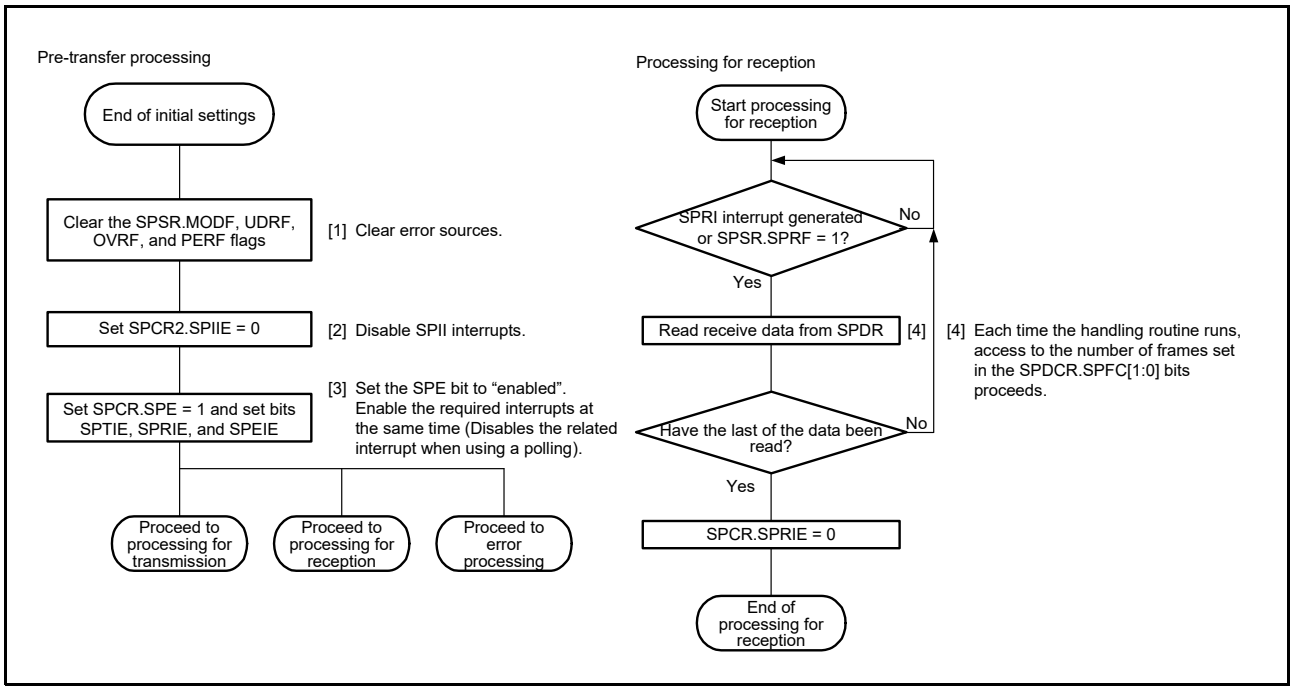

Figure 31.41 Flowchart in Slave Mode (Reception)

(c) Flow of Error Processing

In slave mode, even when a mode fault error is generated, the SPSR.MODF flag can be cleared regardless of the status of the SSLA0 pin.

When interrupts are used and an error occurs, if the ICU.IRn.IR flag for the SPTI or SPRI interrupt request is set to 1, clear the ICU.IRn.IR flag in the error processing routine. If the SPRI interrupt request is indicated, read the receive buffer and initialize the sequencer in the RSPI.

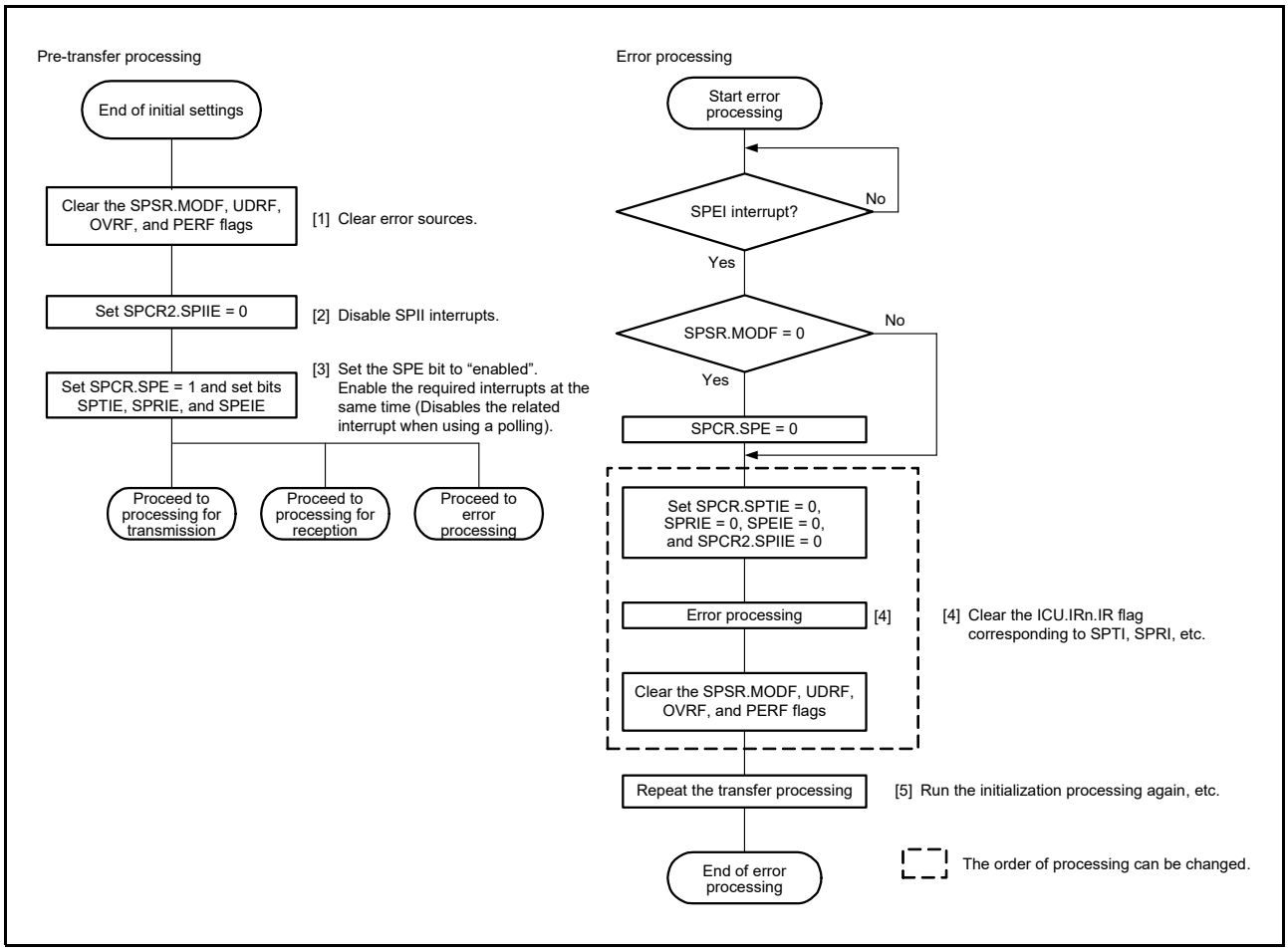

Figure 31.42 Flowchart for Slave Mode (Error Processing)

31.3.12 Clock Synchronous Operation

Setting the SPCR.SPMS bit to 1 selects clock synchronous operation of the RSPI. In clock synchronous operation, the SSLAi pin is not used, and the three pins of RSPCKA, MOSIA, and MISOA handle communications. The SSLAi pin is available as I/O port pins.
Although clock synchronous operation does not require use of the SSLAi pin, operation of the module is the same as in SPI operation. That is, in both master and slave mode operations, communications can be performed with the same flow as in SPI operation. However, mode fault errors are not detected because the SSLAi pin is not used.
Furthermore, do not set the SPCMDm.CPHA bit to 0 if clock synchronous operation is to proceed in slave mode (SPCR.MSTR = 0).

31.3.12.1 Master Mode Operation

(1) Starting a Serial Transfer

The RSPI updates the data in the transmit buffer (SPTX) of the SPDR register when data is written to the SPDR register with the transmit buffer being empty (the SPTEF flag is 1 and data for the next transfer is not set). When the shift register is empty after the number of frames set in the SPDCR.SPFC[1:0] bits are written to the SPDR register, the RSPI copies data from the transmit buffer to the shift register and starts serial transmission. Upon copying transmit data to the shift register, the RSPI changes the status of the shift register to “full”, and upon termination of serial transfer, it changes the status of the shift register to “empty”. The status of the shift register cannot be referenced.
For details on the RSPI transfer format, refer to section 31.3.5, Transfer Format.
However, transfer in clock synchronous operation is conducted without the SSLA0 output signal.

(2) Terminating a Serial Transfer

The RSPI terminates the serial transfer after transmitting an RSPCKA edge corresponding to the sampling timing. If free space is available in the receive buffer (SPRX) (the SPRF flag is 0), upon termination of serial transfer, the RSPI copies data from the shift register to the receive buffer of the RSPI data register (SPDR).
It should be noted that the final sampling timing varies depending on the bit length of transfer data. In master mode, the RSPI data length depends on the SPCMDm.SPB[3:0] bit setting.
For details on the RSPI transfer format, refer to section 31.3.5, Transfer Format.
However, transfer in clock synchronous operation is conducted without the SSLA0 output signal.

(3) Sequence Control

The transfer format employed in master mode is determined by SPSCR, SPCMDm, SPBR, SPCKD, SSLND, and SPND registers. Although the SSLAi signals are not output in clock synchronous operation, these settings are valid.
The SPSCR register is a register used to determine the sequence configuration for serial transfers that are executed by the RSPI in master mode. The following items are set in the SPCMDm register: SSLAi output signal value, MSB/LSB first, data length, some of the bit rate settings, RSPCKA polarity/phase, whether the SPCKD register is to be referenced, whether the SSLND register is to be referenced, and whether the SPND register is to be referenced. The SPBR register holds some of the bit rate settings; the SPCKD register, an RSPI clock delay value; the SSLND register, an SSL negation delay; and the SPND register, a next-access delay value.
According to the sequence length that is assigned to the SPSCR register, the RSPI makes up a sequence comprised of a part or all of the SPCMDm register. The RSPI contains a pointer to the SPCMDm register that makes up the sequence. The value of this pointer can be checked by reading the SPSSR.SPCP[2:0] bits. When the SPCR.SPE bit is set to 1 and the RSPI function is enabled, the RSPI loads the pointer to the commands in the SPCMD0 register, and incorporates the SPCMD0 register setting into the transfer format at the beginning of serial transfer. The RSPI increments the pointer each time the next-access delay period for a data transfer ends. Upon completion of the serial transfer that corresponds to the final command comprising the sequence, the RSPI sets the pointer in the SPCMD0 register, and in this manner the sequence is executed repeatedly.

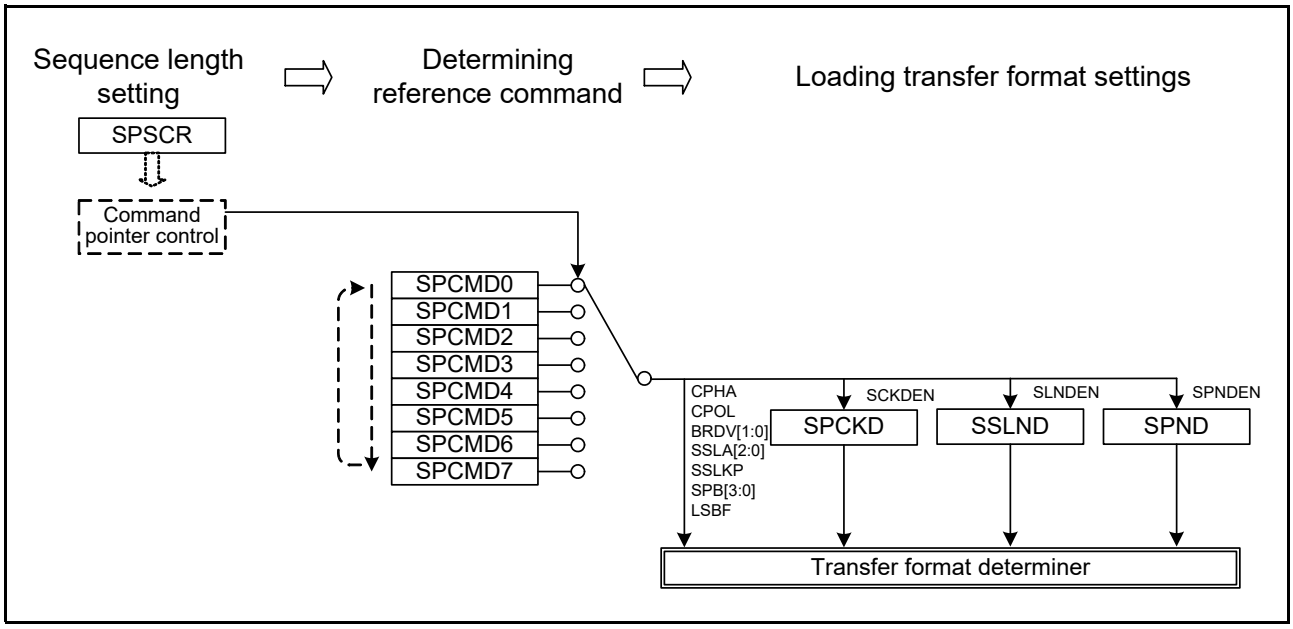

Figure 31.43 Procedure for Determining the Form of Serial Transmission in Master Mode

In this section, a frame is the combination of the data (SPDR) and the settings (SPCMDm).

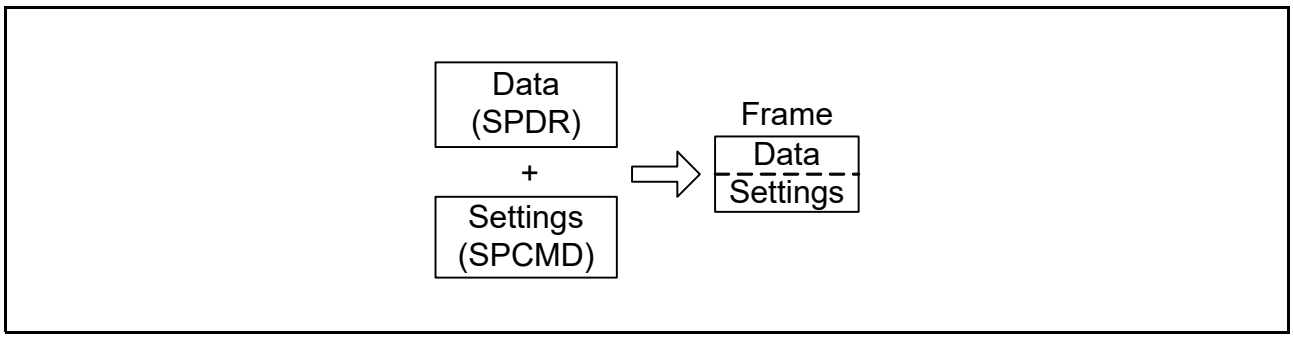

Figure 31.44 Concept of a Frame

Figure 31.45 shows the relationship between the command and the transmit and receive buffers in the sequence of operations specified by the settings in Table 31.4.

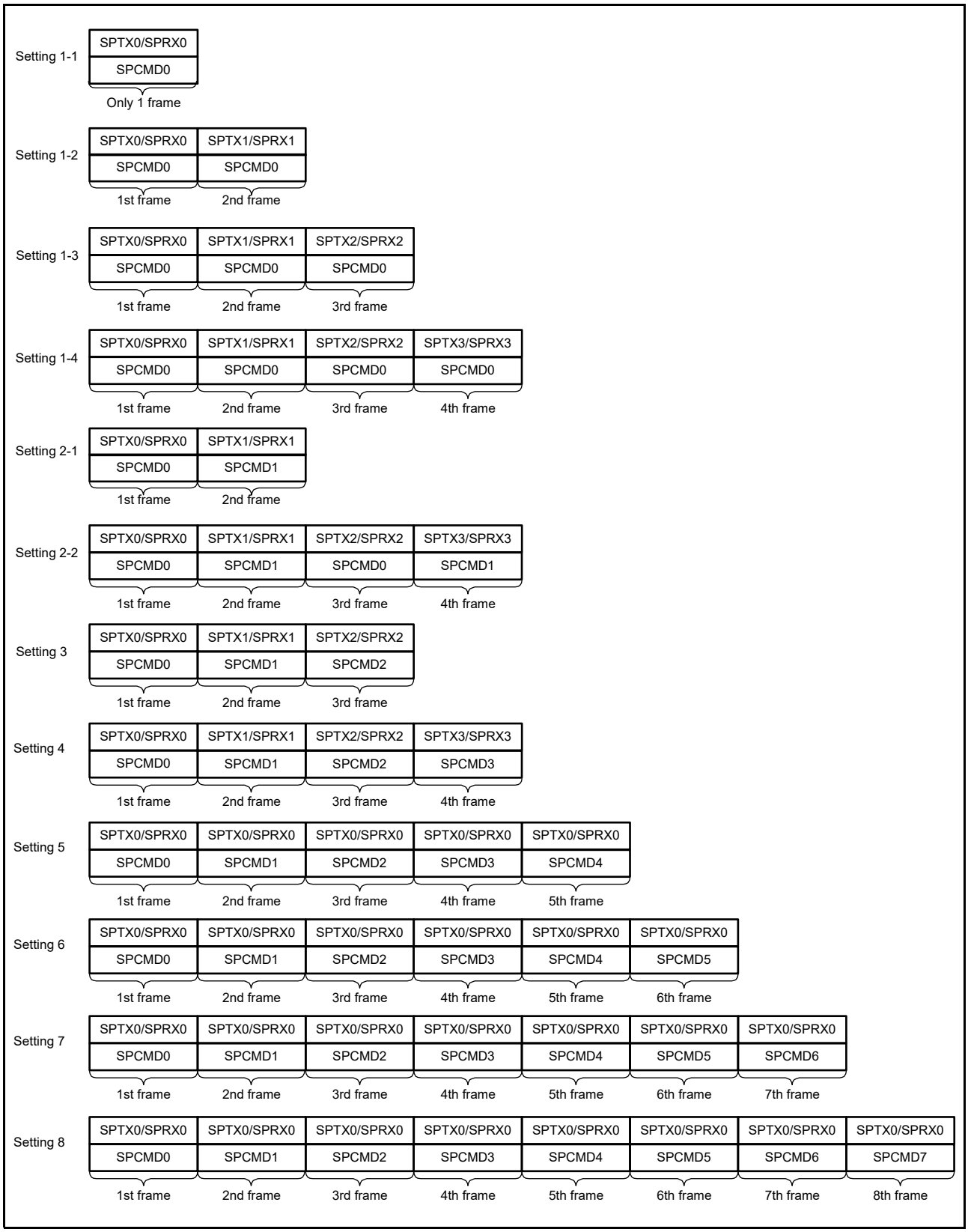

Figure 31.45 Correspondence between the RSPI Command Register and Transmit/Receive Buffers in Sequence Operations

(4) Initialization Flowchart

Figure 31.46 is a flowchart illustrating an example of initialization in clock synchronous operation when the RSPI is used in master mode. For a description of how to set up the interrupt controller, DMAC, and I/O ports, refer to the descriptions given in the individual blocks.

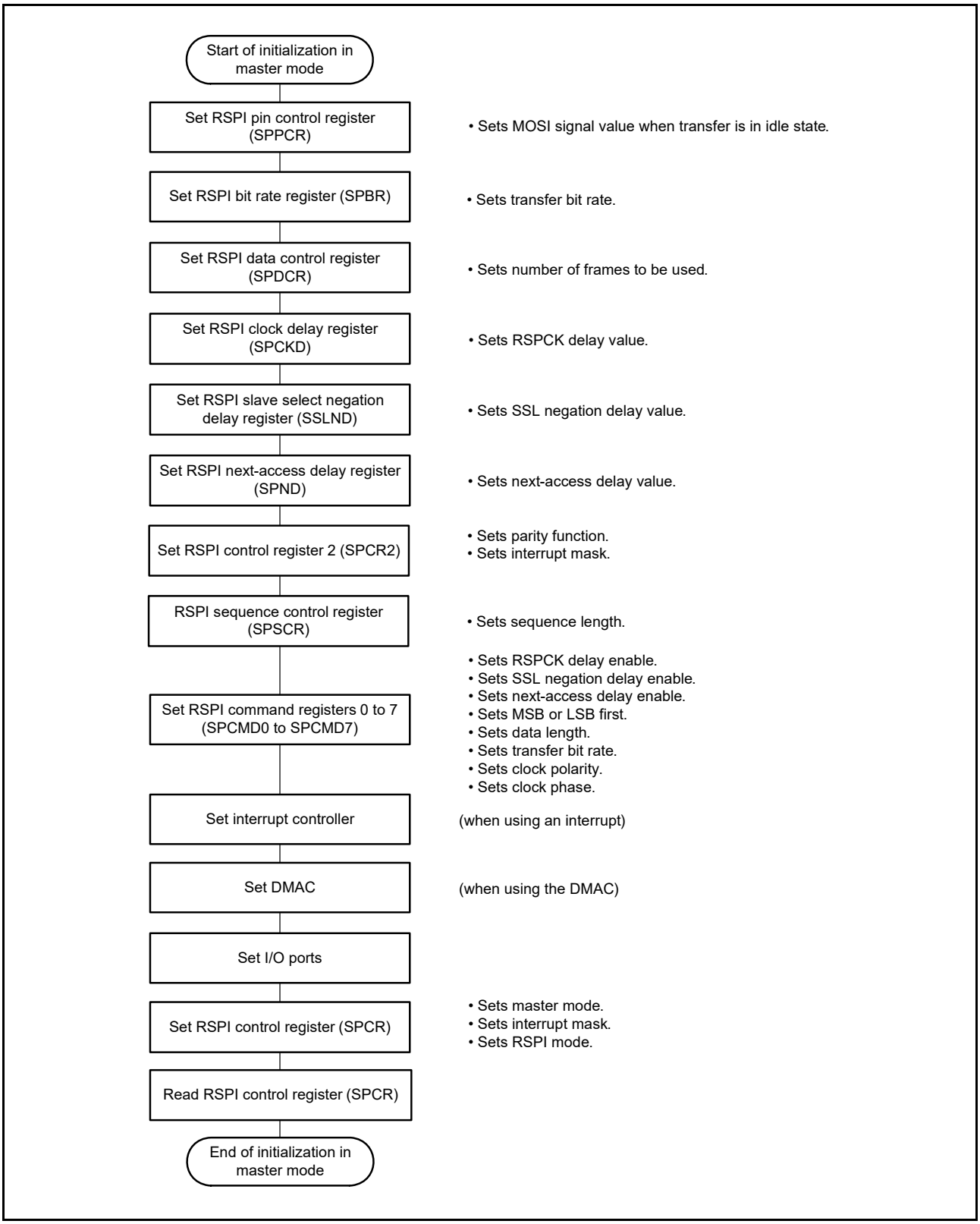

Figure 31.46 Example of Initialization Flowchart in Master Mode (Clock Synchronous Operation)

(5) Flow of Software Processing

Software processing during clock-synchronous operation when the RSPI is used in master mode is the same as that for SPI master mode operation. For details, refer to section 31.3.11.1, (9) Software Processing Flow. Note that mode fault errors will not occur.

31.3.12.2 Slave Mode Operation

(1) Starting a Serial Transfer

When the SPCR.SPMS bit is 1, the first RSPCKA edge triggers the start of a serial transfer in the RSPI.
When the SPMS bit is 1, the RSPI drives the MISOA output signal.
For details on the RSPI transfer format, refer to section 31.3.5, Transfer Format.
It should be noted that the SSLA0 input signal is not used in clock synchronous operation.

(2) Terminating a Serial Transfer

The RSPI terminates the serial transfer after detecting an RSPCKA edge corresponding to the final sampling timing. When free space is available in the receive buffer (the SPRF flag is 0), upon termination of serial transfer the RSPI copies received data from the shift register to the receive buffer of the SPDR register. Upon termination of a serial transfer the RSPI changes the status of the shift register to “empty” regardless of the receive buffer status. The final sampling timing changes depending on the bit length of transfer data. In slave mode, the RSPI data length depends on the SPCMD0.SPB[3:0] bit setting.
For details on the RSPI transfer format, refer to section 31.3.5, Transfer Format.

(3) Initialization Flowchart

Figure 31.47 is a flowchart illustrating an example of initialization in clock synchronous operation when the RSPI is used in slave mode. For a description of how to set up the interrupt controller, DMAC, and I/O ports, refer to the descriptions given in the individual blocks.

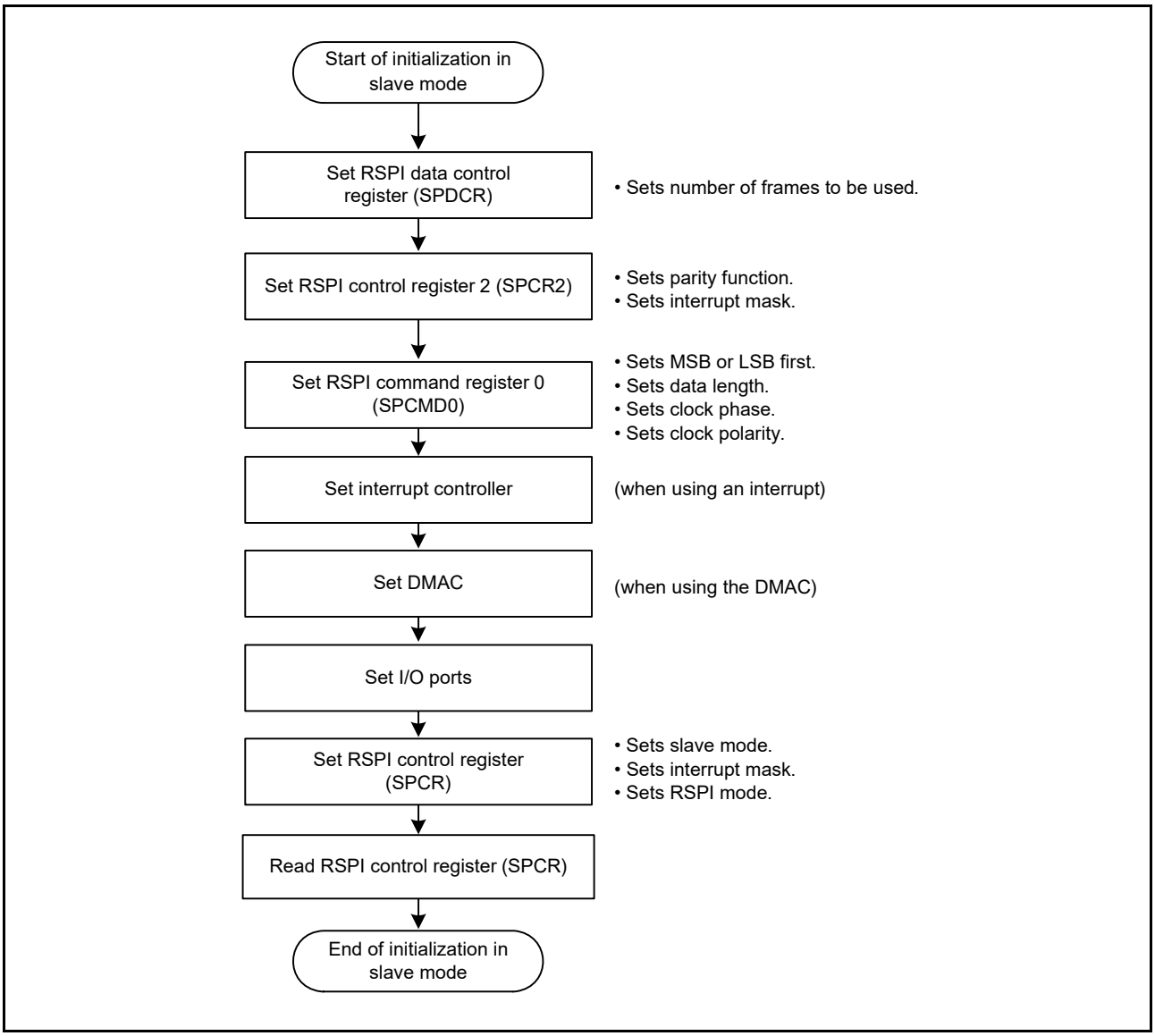

Figure 31.47 Example of Initialization Flowchart in Slave Mode (Clock Synchronous Operation)

(4) Flow of Software Processing

Software processing during clock-synchronous operation when the RSPI is used in slave mode is the same as that for SPI slave mode operation. For details, refer to section 31.3.11.2, (6) Software Processing Flow. Note that mode fault errors will not occur.

31.3.13 Loopback Mode

When 1 is written to the SPPCR.SPLP2 bit or SPPCR.SPLP bit, the RSPI shuts off the path between the MISOA pin and the shift register if the SPCR.MSTR bit is 1, and between the MOSIA pin and the shift register if the SPCR.MSTR bit is 0, and connects the input path and output path of the shift register. The RSPI does not shut off the path between the MOSIA pin and the shift register if the SPCR.MSTR bit is 1, and between the MISOA pin and the shift register if the SPCR.MSTR bit is 0. This is called loopback mode. When a serial transfer is executed in loopback mode, the transmit data for the RSPI or the reversed transmit data becomes the received data for the RSPI.

Table 31.11 lists the relationship among the SPLP2 and SPLP bits and the received data. Figure 31.48 shows the configuration of the shift register I/O paths for the case where the RSPI in master mode is set in loopback mode (SPPCR.SPLP2 = 0, SPPCR.SPLP = 1).

Table 31.11 SPLP2 and SPLP Bit Settings and Received Data

SPPCR.SPLP2 Bit	SPPCR.SPLP Bit	Received Data
0	0	Input data from the MOSIA pin or MISOA pin
0	1	Inverted transmit data
1	0	Transmit data
1	1	Transmit data

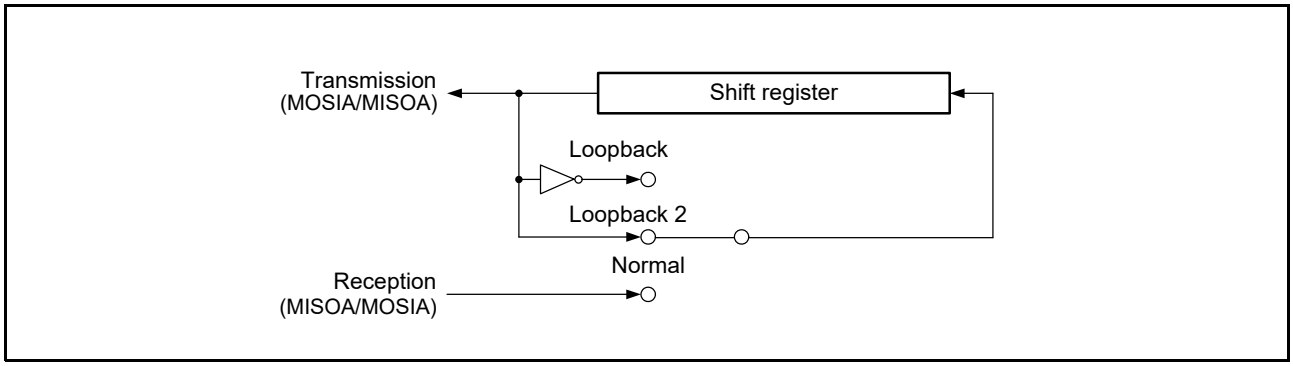

Figure 31.48 Configuration of Shift Register I/O Paths in Loopback Mode (Master Mode)

31.3.14 Self-Diagnosis of Parity Bit Function

The parity circuit consists of a parity bit adding unit used for transmit data and an error detecting unit used for received data. In order to detect defects in the parity bit adding unit and error detecting unit of the parity circuit, self-diagnosis is executed for the parity circuit following the flowchart shown in Figure 31.49.

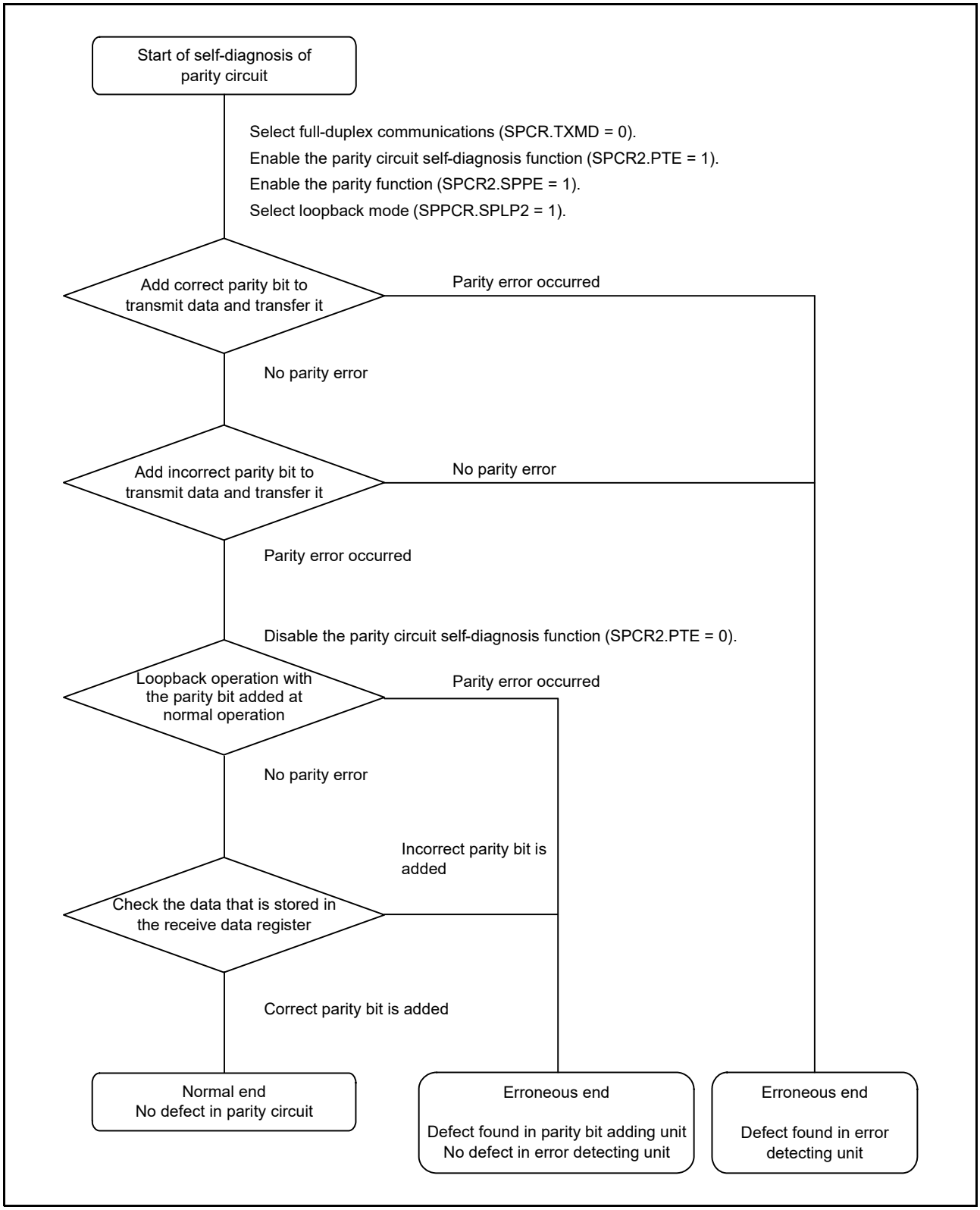

Figure 31.49 Flowchart for Self-Diagnosis of Parity Circuit

31.3.15 Interrupt Sources

The RSPI has interrupt sources of receive buffer full, transmit buffer empty, error (mode fault, underrun, overrun, and parity error), and idle. In addition, the DTC or DMAC can be activated by the receive buffer full or transmit buffer empty interrupt to perform data transfer.

Since the vector address for SPEI is allocated to interrupt requests due to mode fault, underrun, overrun, and parity errors, the actual interrupt source must be determined from the flags. Interrupt sources for the RSPI are listed in Table 31.12. An interrupt is generated on satisfaction of an interrupt condition in Table 31.12. Clear the receive buffer full and transmit buffer empty sources through data transfer.

When using the DTC or DMAC to perform data transmission/reception, the DTC or DMAC must be set up first to be in a status in which transfer is enabled before making the RSPI settings. For the method for setting the DTC or DMAC, refer to section 17, DMA Controller (DMACA), or section 18, Data Transfer Controller (DTCa).

If the conditions for generating a transmit buffer empty or receive buffer full interrupt are generated while the ICU.IRn.IR flag is 1, the interrupt is not output as a request for ICU but is retained internally (the capacity for retention is one request per source). A retained interrupt request is output when the ICU.IRn.IR flag becomes 0. A retained interrupt request is automatically discarded once it is output as an actual interrupt request. The interrupt enable bit (the SPCR.SPTIE or SPCR.SPRIE bit) for an internally retained interrupt request can also be cleared to 0.

Table 31.12 Interrupt Sources of RSPI

Interrupt Source	Symbol	Interrupt Condition	DMAC/DTC Activation
Receive buffer full	SPRI	The receive buffer becomes full (the SPRF flag becomes 1) while the SPCR.SPRIE bit is 1.	Possible
Transmit buffer empty	SPTI	The transmit buffer becomes empty (the SPTEF flag becomes 1) while the SPCR.SPTIE bit is 1.	Possible
Errors (mode fault, underrun, overrun, and parity error)	SPEI	The SPSR.MODF, UDRF, OVRF, or PERF flag is set to 1 while the SPCR.SPEIE bit is 1.	Impossible
Idle	SPII	The SPSR.IDLNF flag is set to 0 while the SPCR2.SPIIE bit is 1.	Impossible

31.4 Link Operation by Event Linking

The RSPI0 supports the following event output for the event link controller (ELC). The event link output signal is output regardless of the interrupt enable bit setting.

31.4.1 Receive Buffer Full Event Output

This event signal is output when received data have been transferred from the shift register to the SPDR register on completion of serial transfer.

31.4.2 Transmit Buffer Empty Event Output

This event signal is output when data for transmission have been transferred from the transmit buffer to the shift register and when the value of the SPE bit has changed from 0 to 1.

31.4.3 Mode Fault, Underrun, Overrun, or Parity Error Event Output

(1) Mode Fault

Table 31.13 lists the occurrence conditions of a mode fault event.

Table 31.13 Occurrence Conditions of Mode Fault Event

	SPCR.MODFEN Bit	SSLA0 Pin	Remarks
Master (SPCR.MSTR bit = 1)	1	Active	Under the condition (the SPCR.MSTR bit is 1 and the MODFEN bit is 1), if the SPCR.SPMS bit is 0, mode fault error, overrun error, and parity error event output cannot be used. Do not set the ELSRn register to 52h.
Slave (SPCR.MSTR bit = 0)	1	Not active	Event is output only when the pin is deactivated during transmission.

(2) Underrun

The condition for this event signal being output in response to an underrun is the start of serial transfer with the transmit buffer containing no transmit data while the value of the SPCR.MSTR bit is 0 and the value of the SPCR.SPE bit is 1, in which case the UDRF and MODF flags are set to 1.

(3) Overrun

The condition for this event signal being output in response to an overrun is completion of serial transfer while the receive buffer contains data that have not been read and the value of the SPCR.TXMD bit is 0, in which case the OVRF flag is set to 1.

(4) Parity Error

The condition for this event signal being output in response to a parity error is detection of a parity error on completion of serial transfer while the value of the TXMD bit in SPCR is 0 and the value of the SPPE bit in SPCR2 is 1.

31.4.4 Idle Event Output

(1) In Master Mode

In master mode, an event is output when the condition for setting the IDLNF flag (idle flag) to 0 is satisfied.

(2) In Slave Mode

In slave mode, an event is output when the SPCR.SPE bit is set to 0 (RSPI is initialized).

31.4.5 Transmit End Event Output

During both SPI operation and clock synchronous operation in master mode, an event is output under the condition for setting the IDLNF flag (idle flag) from 1 to 0. In slave mode, an event is output under the conditions listed in Table 31.14.

Table 31.14 Generating Conditions of Transmit End Event (Slave mode)

RSPI Mode	Transmit Buffer State	Shift Register State	Others
SPI operation (SPMS = 0)	Empty	Empty	Negation of the SSLA0 input
Clock synchronous operation (SPMS = 1)	Empty	Empty	Even edge detection of the last RSPCKA for the last data

Whether the operation is in master mode or slave mode, an event is not output if 0 is written to the SPCR.SPE bit during transmission or the SPCR.SPE bit is cleared by the mode fault error.

31.5 Usage Notes

31.5.1 Setting Module Stop Function

Module stop control register B (MSTPCRB) can be used to enable or disable the RSPI. Immediately after a reset, operation of the RSPI is disabled. Register access is enabled by releasing the module stop state. For details, refer to section 11, Low Power Consumption.

31.5.2 Note on Low Power Consumption Functions

When using the module stop function and entering a low power consumption mode other than sleep mode, set the SPCR.SPE bit to 0 before completing communication.

31.5.3 Notes on Starting Transfer

If the ICU.IRn.IR flag is 1 at the time transfer is to be started, an interrupt request is internally retained after transfer starts, and this can lead to unanticipated behavior of the ICU.IRn.IR flag.
When the ICU.IRn.IR flag is 1 at the time transfer is to start, follow the procedure below to clear interrupt requests before enabling operations (by setting the SPCR.SPE bit to 1).

1. Confirm that transfer has stopped (i.e. that the SPCR.SPE bit is 0).
2. Set the relevant interrupt enable bit (the SPCR.SPTIE or SPCR.SPRIE bit) to 0.
3. Read the relevant interrupt enable bit (the SPCR.SPTIE or SPCR.SPRIE bit) and confirm that its value is 0.
4. Set the ICU.IRn.IR flag to 0.

31.5.4 Notes on the SPRF and SPTEF flags

When polling the SPSR.SPRF flag and/or SPSR.SPTEF flag, set the SPCR.SPRIE bit and/or SPCR.SPTIE bit to 0.

32. CRC Calculator (CRC)

The CRC (Cyclic Redundancy Check) calculator generates CRC codes.

32.1 Overview

Table 32.1 lists the specifications of the CRC calculator, and Figure 32.1 shows a block diagram of the CRC calculator.

Table 32.1 CRC Specifications

Item	Description
Data for CRC calculation*1	CRC codes are generated for any desired data in 8n-bit units (where n is a whole number)
CRC processor unit	8-bit parallel processing
CRC generating polynomial	One of three generating polynomials is selectable • 8-bit CRC $X^8 + X^2 + X + 1$ • 16-bit CRC $X^{16} + X^{15} + X^2 + 1$ $X^{16} + X^{12} + X^5 + 1$
CRC calculation switching	The bit order of CRC calculation results can be switched for LSB first or MSB first communication
Low power consumption function	Module stop state can be set.

Note 1. The circuit does not have a function to divide data for calculation into CRC calculation units. Write data in 8-bit units.

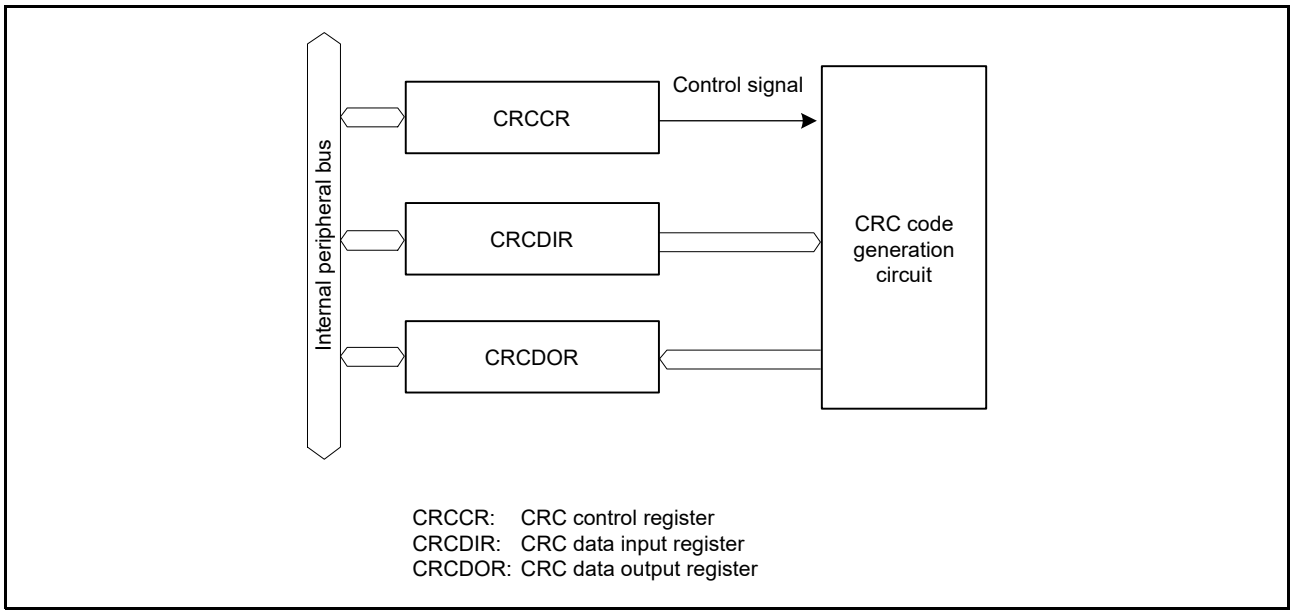

Figure 32.1 CRC Block Diagram

32.2 Register Descriptions

32.2.1 CRC Control Register (CRCCR)

Address(es): 0008 8280h

	b7	b6	b5	b4	b3	b2	b1	b0
	DORCLR	—	—	—	—	LMS	GPS[1:0]	
Value after reset:	0	0	0	0	0	0	0	0

Bit	Symbol	Bit Name	Description	R/W
b1, b0	GPS[1:0]	CRC Generating Polynomial Switching	b1 b0 0 0: No calculation is executed. 0 1: 8-bit CRC ($X^8 + X^2 + X + 1$) 1 0: 16-bit CRC ($X^{16} + X^{15} + X^2 + 1$) 1 1: 16-bit CRC ($X^{16} + X^{12} + X^5 + 1$)	R/W
b2	LMS	CRC Calculation Switching	0: Generates CRC for LSB first communication. 1: Generates CRC for MSB first communication.	R/W
b6 to b3	—	Reserved	These bits are read as 0. The write value should be 0.	R/W
b7	DORCLR	CRCDOR Register Clear	1: Clears the CRCDOR register. This bit is read as 0.	R/W*1

Note 1. Only 1 can be written.

LMS Bit (CRC Calculation Switching)

This bit selects the bit order of generated 16-bit CRC code. Transmit the lower-order byte (b7 to b0) of the CRC code first for LSB first communication and the higher-order byte (b15 to b8) first for MSB first communication. For details on the transmission and reception of CRC codes, refer to section 32.3, Operation.

DORCLR Bit (CRCDOR Register Clear)

Write 1 to this bit so that the CRCDOR register is set to 0000h.
This bit is read as 0. Only 1 can be written.

32.2.2 CRC Data Input Register (CRCDIR)

Address(es): 0008 8281h

	b7	b6	b5	b4	b3	b2	b1	b0
Value after reset:	0	0	0	0	0	0	0	0

CRCDIR is a readable and writable register. Write data for CRC calculation to this register.

32.2.3 CRC Data Output Register (CRCDOR)

Address(es): 0008 8282h

	b15	b14	b13	b12	b11	b10	b9	b8	b7	b6	b5	b4	b3	b2	b1	b0
Value after reset:	0	0	0	0	0	0	0	0	0	0	0	0	0	0	0	0

CRCDOR is a readable and writable register.
Since its initial value is 0000h, rewrite the CRCDOR register to perform calculation using a value other than the initial value.
Data written to the CRCDIR register is CRC calculated and the result is stored in the CRCDOR register. If the CRC code is calculated following the transferred data and the result is 0000h, there is no CRC error.
When an 8-bit CRC ($X^8 + X^2 + X + 1$ polynomial) is in use, the valid CRC code is obtained in the low-order byte (b7 to b0). The high-order byte (b15 to b8) is not updated.

32.3 Operation

The CRC calculator generates CRC codes for use in LSB first or MSB first transfer.
The following shows examples of generating the CRC code for input data (F0h) using the 16-bit CRC generating polynomial ($X^{16} + X^{12} + X^5 + 1$). In these examples, the value of the CRC data output register (CRCDOR) is cleared before CRC calculation.
When an 8-bit CRC (with the polynomial $X^8 + X^2 + X + 1$) is in use, the valid bits of the CRC code are obtained in the lower-order byte of the CRCDOR register.

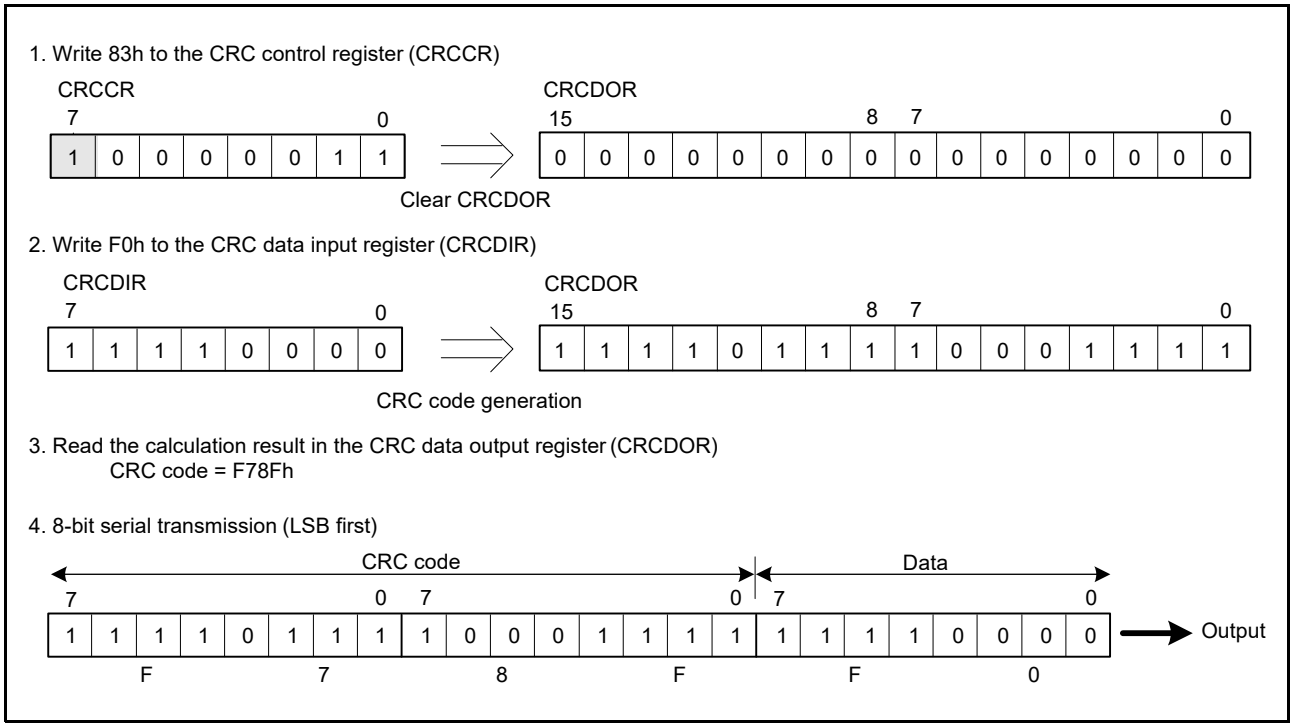

Figure 32.2 LSB First Data Transmission

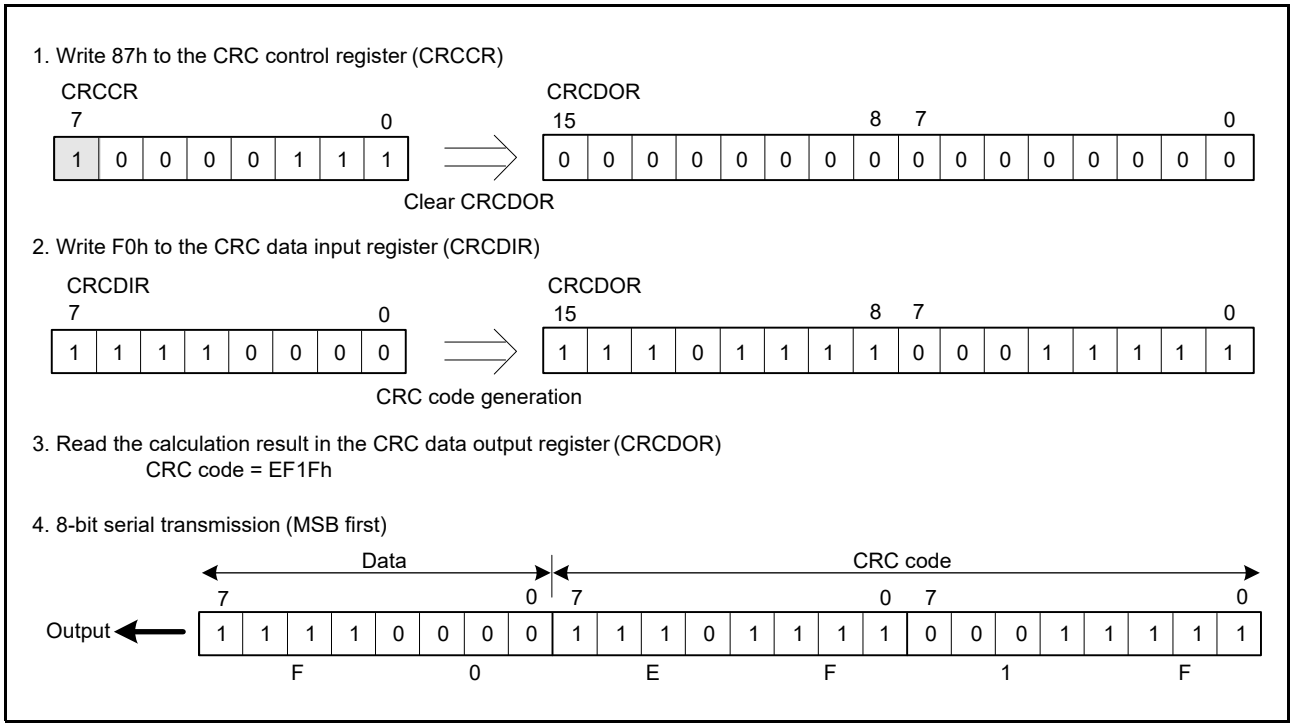

Figure 32.3 MSB First Data Transmission

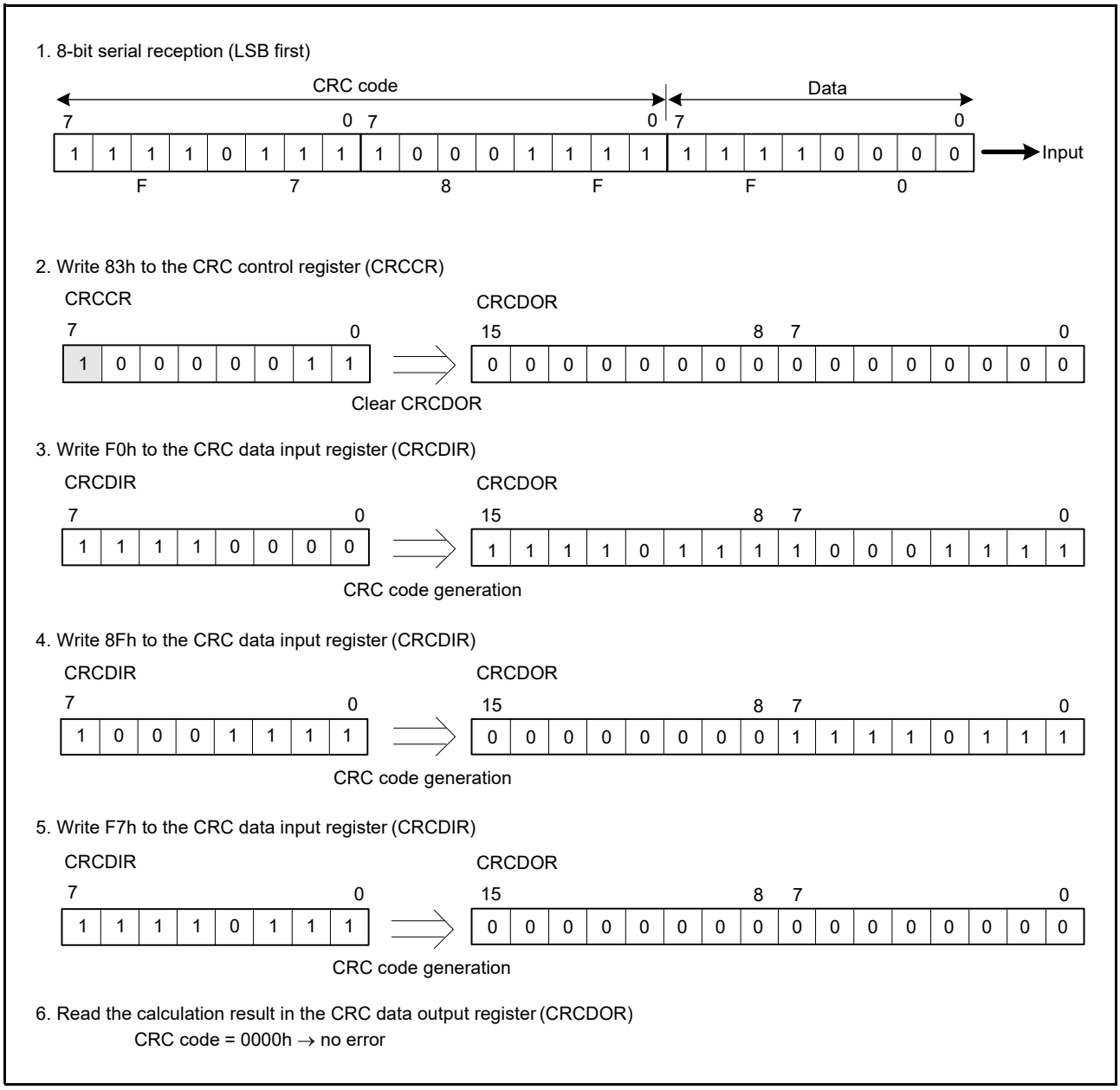

Figure 32.4 LSB First Data Reception

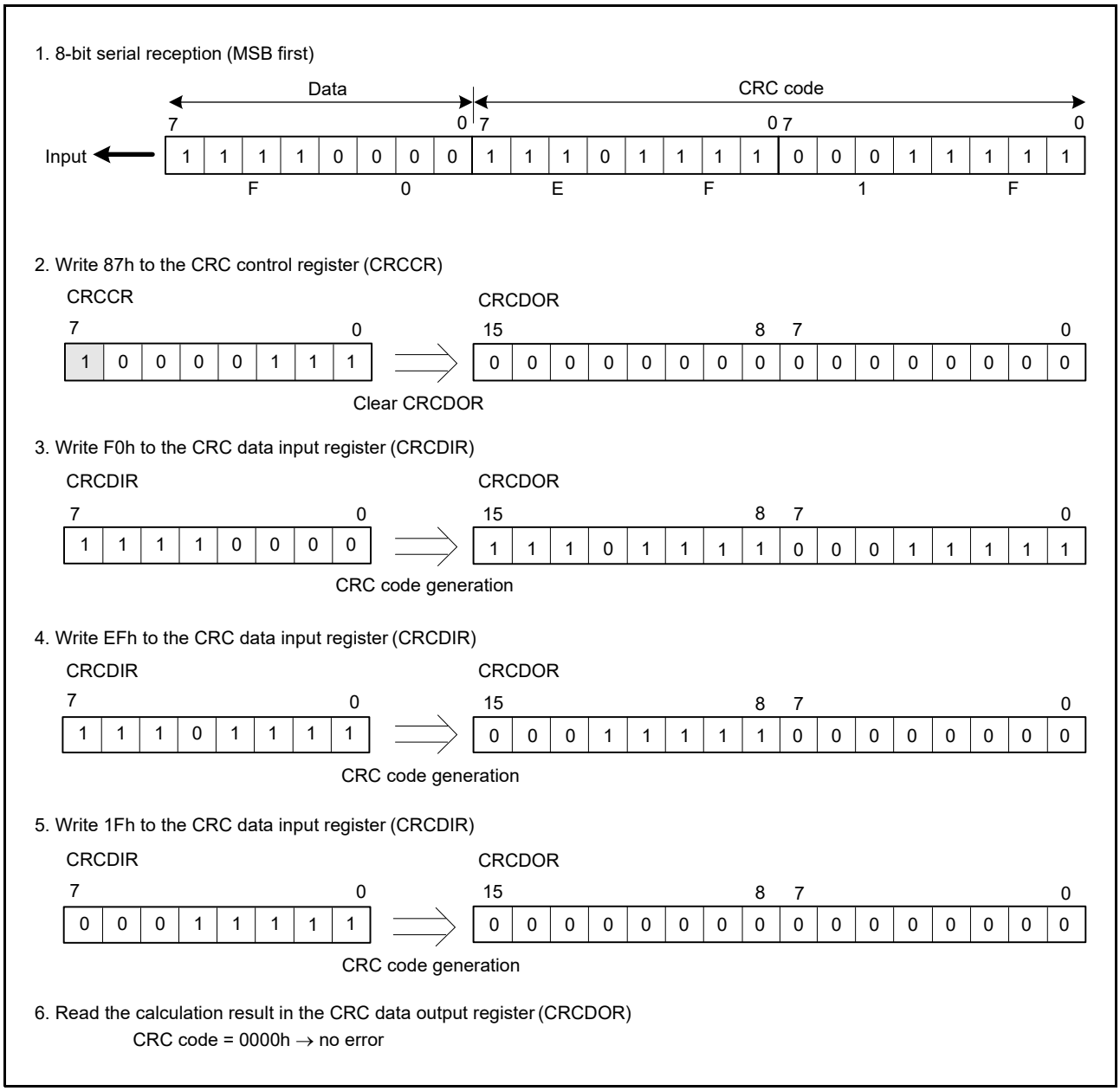

Figure 32.5 MSB First Data Reception

32.4 Usage Notes

32.4.1 Module Stop Function Setting

Operation of the CRC calculator can be disabled or enabled using the module stop control register B (MSTPCRB). After a reset, the CRC is in the module stop state. Register access is enabled by releasing the module stop state. For details, refer to section 11, Low Power Consumption.

32.4.2 Note on Transmission

Note that the sequence of transmission for the CRC code differs according to whether transmission is LSB first or MSB first.

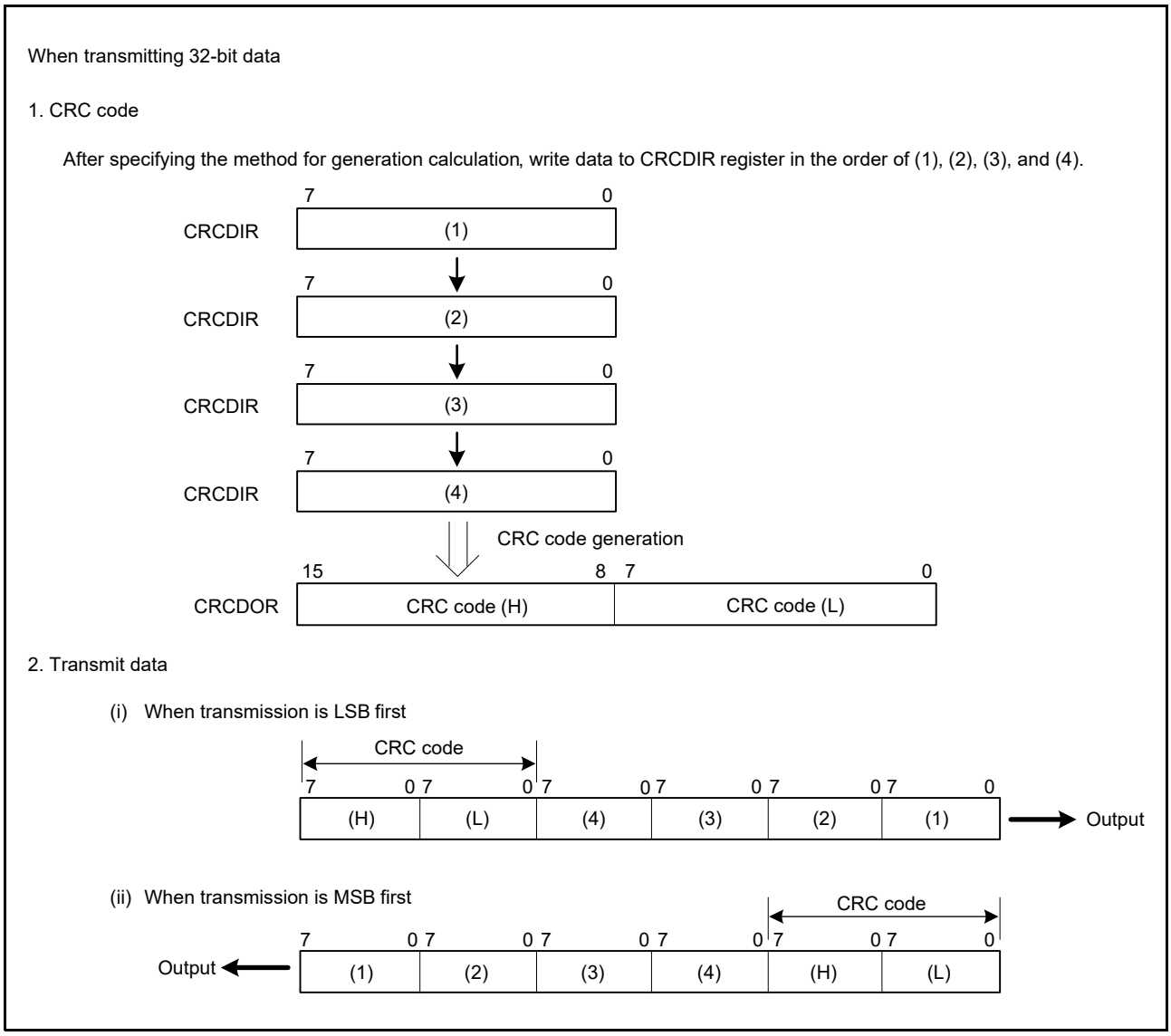

Figure 32.6 LSB First and MSB First Data Transmission

33. Analog Front End (AFE)

33.1 Overview

This MCU incorporates two 24-bit delta-sigma A/D converter (DSAD) units, which feature low power consumption, low noise, and high precision. Each DSAD has a programmable gain instrumentation amplifier (PGA), in which the gain setting can be selected from among ×1, ×2, ×4, ×8, ×16, ×32, ×64, and ×128. The DSADs have six analog input channels and a disconnect detection assist function can be enabled for each input channel.
The MCU also incorporates one 12-bit successive approximation A/D converter (S12AD). This is capable of operating when the power-supply voltage is no less than 1.8 V. The S12AD has a maximum operating clock frequency of 32 MHz, and is capable of high-speed A/D conversion.

This analog front end (AFE) module is built around the DSADs and provides high-precision measurement. It consists of:

- the AFE and DSAD operation control circuits,
- an analog multiplexer (AMUX) and low-side switch (LSW),
- a high-precision and low-drift voltage reference (VREF) and bias voltage generator (VBIAS),
- a temperature sensor (TEMPS),
- low-drift and current-controllable excitation current sources (IEXC), and
- a voltage detector with assistance in detecting disconnection (VDET).

Table 33.1 lists the features of the DSAD and S12AD modules, and Table 33.2 lists the specifications of the AFE.
For details of the 24-bit delta-sigma A/D converter (DSAD) and the 12-bit successive approximation A/D converter (S12AD), refer to section 34, 24-bit Delta-Sigma A/D Converters (DSADA) and section 35, 12-Bit A/D Converter (S12ADE), respectively.

Table 33.1 Features of DSAD and S12AD

Module	Features
24-bit delta-sigma A/D converter (DSAD)	• Two circuits (DSAD0 and DSAD1) • Fourth-order sinc filter • Internal programmable gain instrumentation amplifier (PGA) • Operating mode: single scan, continuous scan, or one-shot • Low-noise: 30 nV_{RMS} (typ.) (input-referred) (f_{MOD} = 500 kHz, DR = 7.6 SPS, Gain = 128) • Oversampling ratio: 32 to 65536 (only multiples of 16)
12-bit successive approximation A/D converter (S12AD)	• Analog multiplexer (up to six pins) • Maximum conversion clock frequency: 32 MHz (conversion rate: 1.4 μs) • Operating mode: single scan, continuous scan, or group scan • Selectable reference voltage voltage reference high input: VREFH0 or AVCC0 voltage reference low input: VREFL0 or AVSS0

Table 33.2 AFE Specifications

Item	Description
Operation control circuit	Operation of each of the following circuits can be controlled. • 24-bit delta-sigma A/D converters (DSAD0 and DSAD1) • Excitation current source (IEXC) • Bias voltage generator (VBIAS) • Voltage reference (VREF) • Temperature sensor (TEMPS) Operating voltage settings for the DSADs are available.
Analog multiplexer (AMUX)	Positive and negative input signals (ANDSnmP and ANDSnmN), and positive and negative reference voltages (VRnmP and VRnmN) for DSAD0 and DSAD1 are selectable per channel (n = 0, 1; m = 0 to 5). • ANDSnmP and ANDSnmN are selectable from among those on the AIN0 to AIN11 pins. • VRnmP is selectable from among the voltages on the REF0P pin, the REF1P pin*1, AVCC0, and REFOUT*2. • VRnmN is selectable from among the voltages on the REF0N pin, the REF1N pin*1, and AVSS0. • TEMPS can be selected for input to DSAD0.
Low-side switch circuit (LSW)	The switch connects LSW pin and AVSS0. On-resistance: 10 Ω (max.)
Voltage reference (VREF)*3	Generated voltage: 2.5 V Maximum load current: ±10 mA Output from the REFOUT pin
Bias voltage generator (VBIAS)	Output voltage: (AVCC0 + AVSS0) / 2 Generated voltage can be output from one among the AIN0 to AIN11 pins.
Temperature sensor (TEMPS)	The registers store temperature sensor calibration data measured for each chip at the time of shipment from the factory.
Excitation current source (IEXC)	Two or four channels of constant current can be output from pins selected from among AIN0 to AIN11. • Two-channel output mode: IEXC0 and IEXC1 are output from two pins from among AIN0 to AIN11. Output current: 50 μA, 100 μA, 250 μA, 500 μA, 750 μA, or 1000 μA • Four-channel output mode: IEXC0 to IEXC3 are output from four pins from among AIN0 to AIN11. Output current: 50 μA, 100 μA, 250 μA, or 500 μA
Voltage detector (VDET)	The following four types of circuit are present.
Low voltage detector for power supply (LVDET)	Detect dropping of the AVCC0 voltage Circuits (LVDET0 and LVDET1) for two detection levels are provided. The detection level can be changed by register settings.
DSAD input voltage fault detector (DSIDET)	Detects voltage fault of positive and negative input signals of DSAD0 and DSAD1 Four circuits (DS0PDET, DS0NDET, DS1PDET, and DS1NDET)
DSAD reference voltage fault detector (DSRDET)	Detects voltage fault of positive and negative reference voltages of DSAD0 and DSAD1 This assists in detecting disconnection between the external voltage references and the MCU. Two circuits (DS0RDET and DS1RDET)
Excitation current source disconnect detector (IEXCDET)	This assists in detecting disconnection between external sensors and the MCU. Four circuits (IEXC0DET, IEXC1DET, IEXC2DET, and IEXC3DET)

Note 1. The REF1P and AIN5 signals are multiplexed on the same pin. The REF1N and AIN4 signals are also multiplexed on the same pin.
Note 2. REFOUT is the output for the voltage reference (VREF).
Note 3. To use the voltage reference, connect the REFOUT pin to AVSS0 via a 0.47-μF capacitor.

Figures 33.1, 33.2, 33.3, and 33.4 are block diagrams of the whole analog front end (AFE), of the analog multiplexer (AMUX), of the excitation current source (IEXC), and of the voltage detector (VDET), respectively.

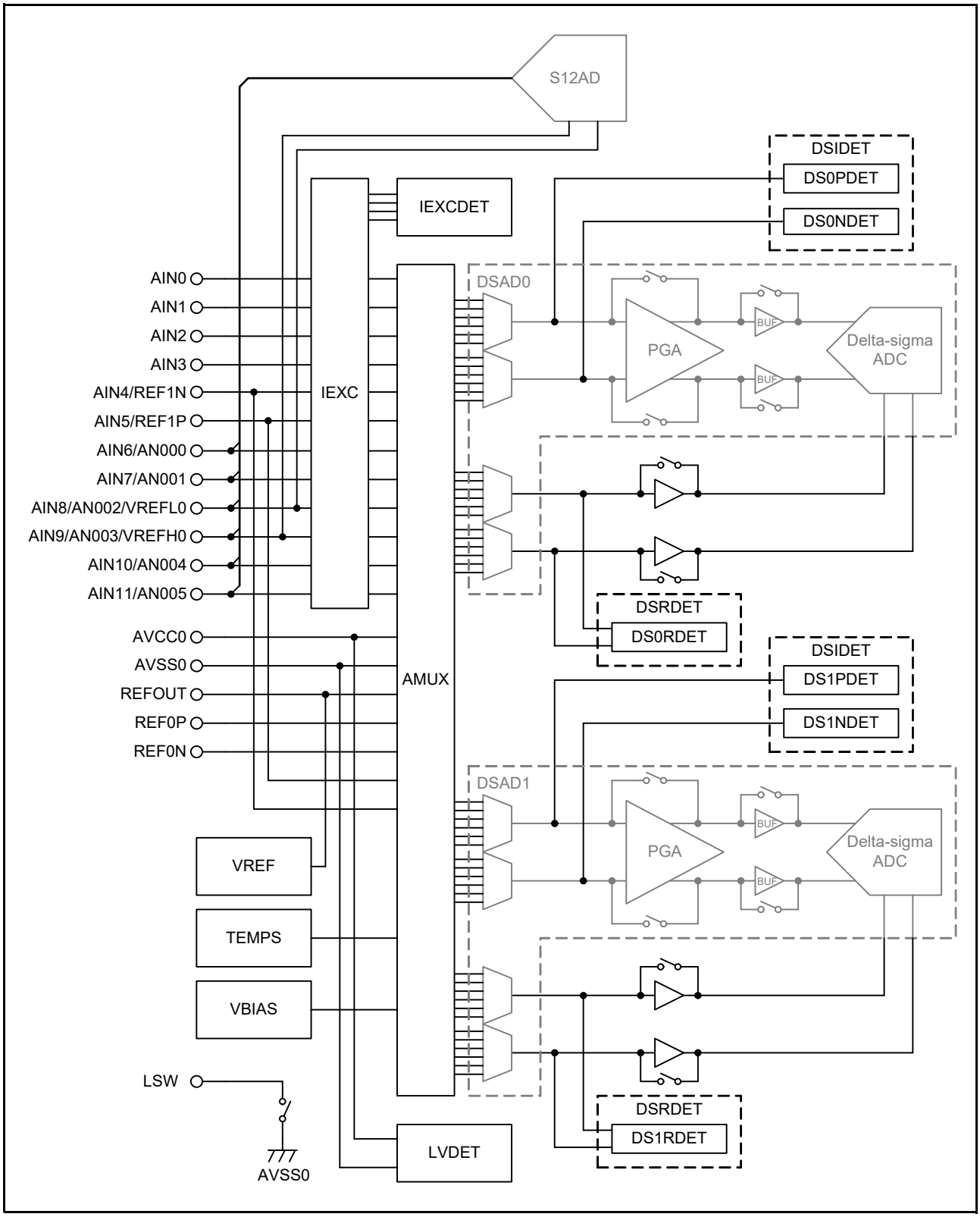

Figure 33.1 AFE Block Diagram

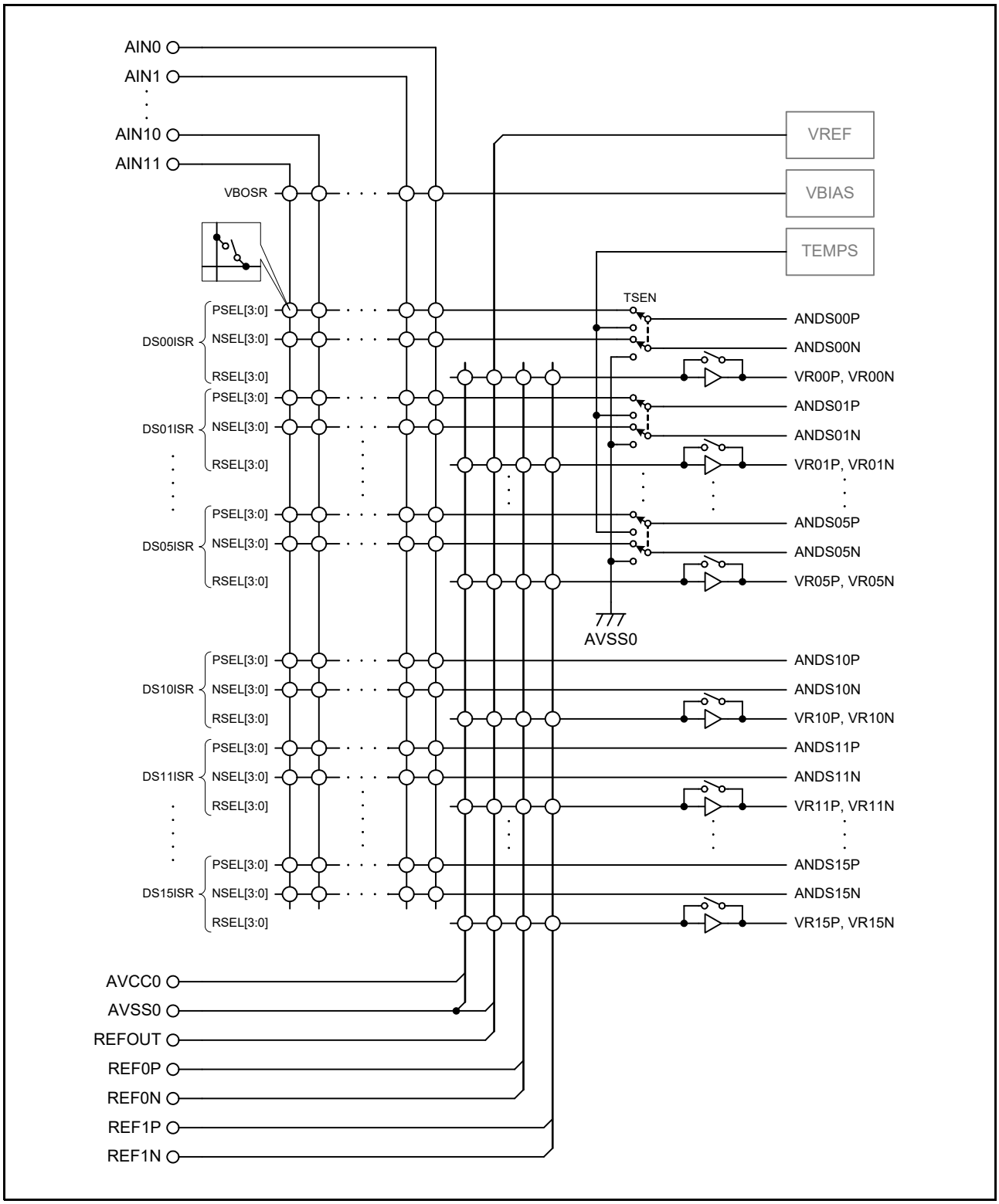

Figure 33.2 AMUX Block Diagram

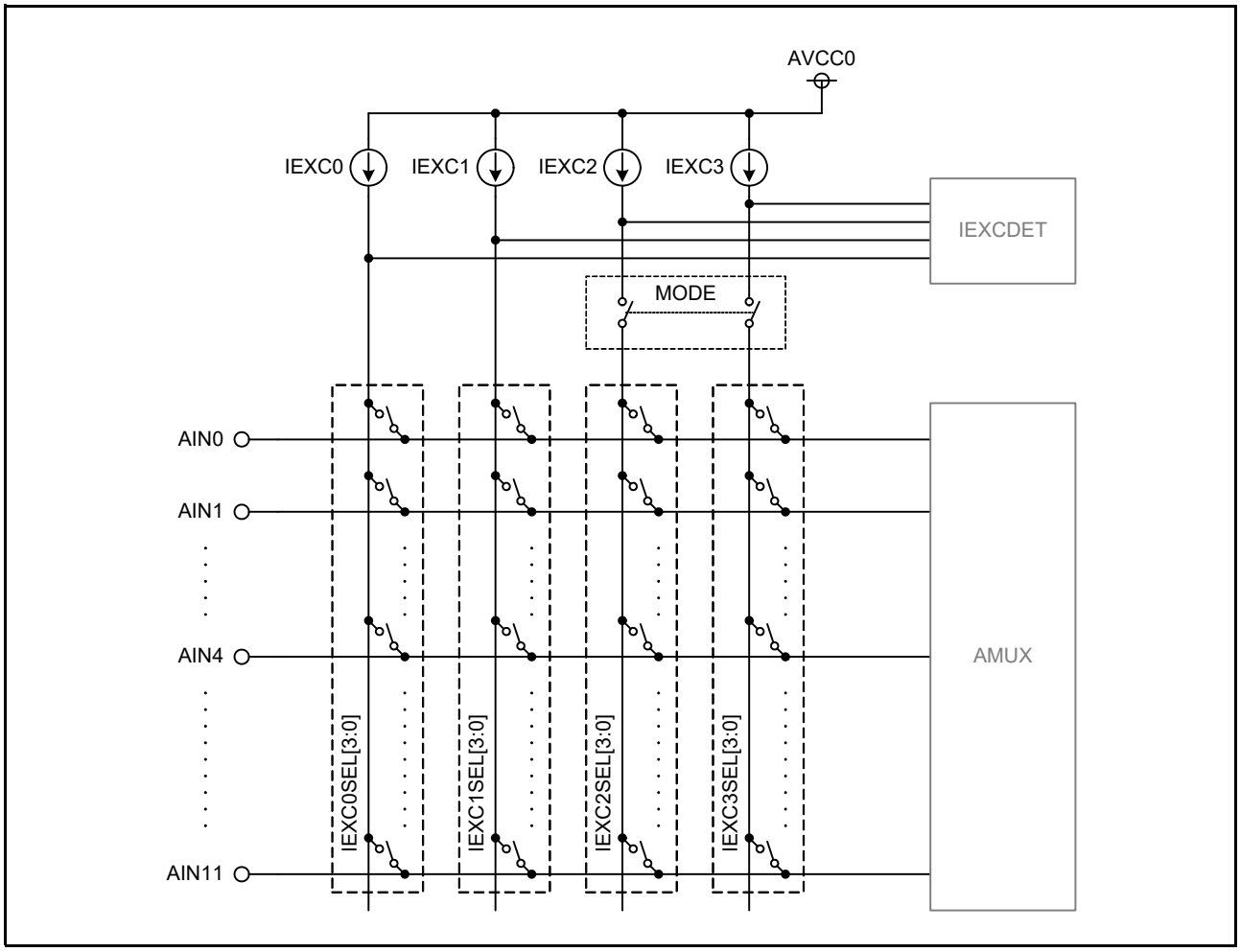

Figure 33.3 IEXC Block Diagram

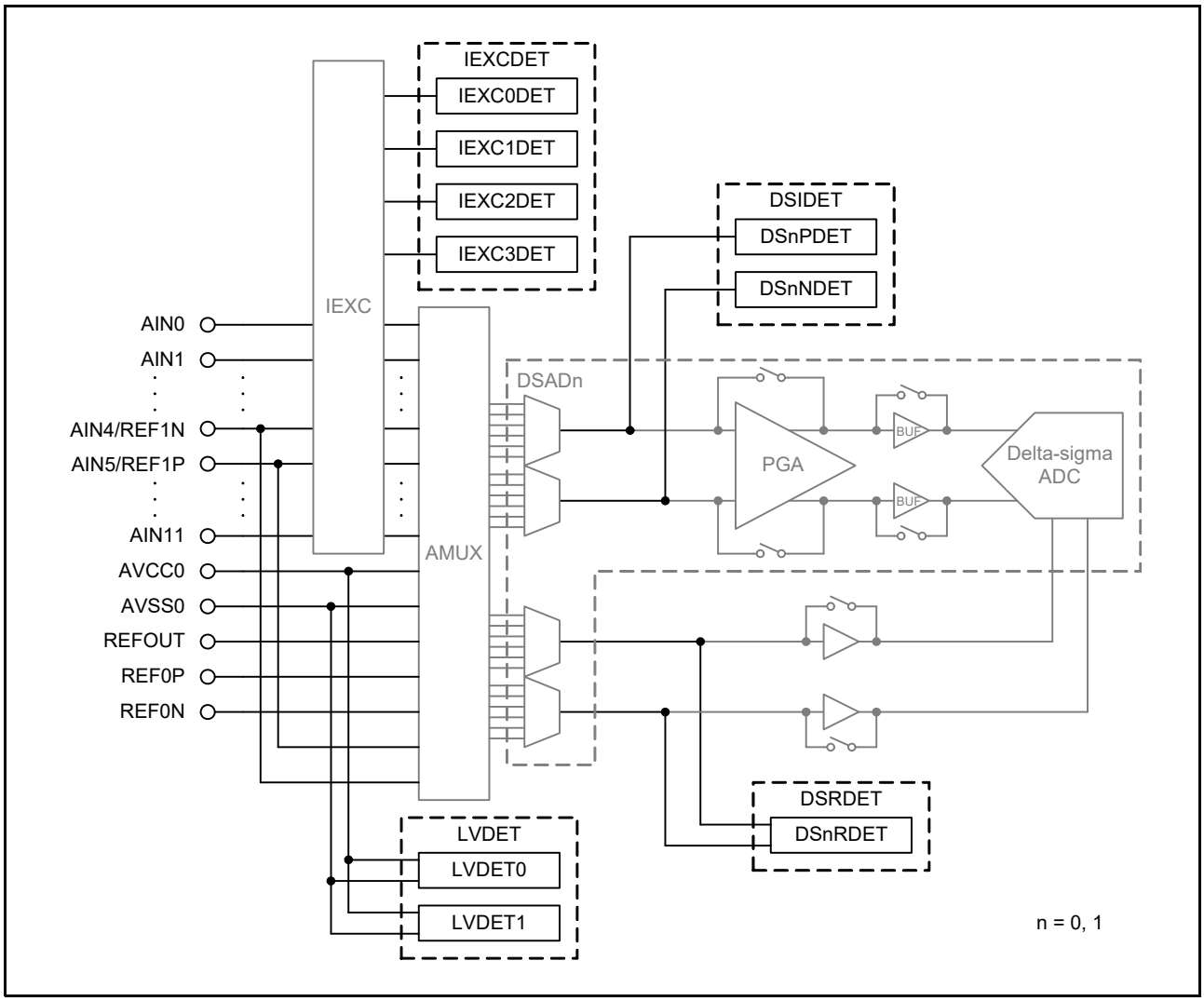

Figure 33.4 VDET Block Diagram

Table 33.3 lists pins used on the analog front end and Table 33.4 lists the internal signals between the analog front end and the 24-bit delta-sigma A/D converter. The internal signals of the 24-bit delta-sigma A/D converter are listed in Table 33.5.

Table 33.3 AFE I/O Pins

Pin Name	I/O	Function
AVCC0	Input	Analog power supply
AVSS0	Input	Analog ground
REFOUT	Output	Output pin for the reference voltage generated by the voltage reference (VREF)
REF0P	Input	Positive reference voltage input pin for the 24-bit delta-sigma A/D converter
REF0N	Input	Negative reference voltage input pin for the 24-bit delta-sigma A/D converter
AIN0	I/O	Analog signal input, VBIAS voltage output, or excitation current output pin
AIN1	I/O	Analog signal input, VBIAS voltage output, or excitation current output pin
AIN2	I/O	Analog signal input, VBIAS voltage output, or excitation current output pin
AIN3	I/O	Analog signal input, VBIAS voltage output, or excitation current output pin
AIN4/REF1N	I/O	Analog signal input, VBIAS voltage output, or excitation current output pin, or negative reference voltage input pin for the 24-bit delta-sigma A/D converter
AIN5/REF1P	I/O	Analog signal input, VBIAS voltage output, or excitation current output pin, or positive reference voltage input pin for the 24-bit delta-sigma A/D converter
AIN6/AN000	I/O	Analog signal input, VBIAS voltage output, or excitation current output pin
AIN7/AN001	I/O	Analog signal input, VBIAS voltage output, or excitation current output pin
AIN8/AN002/VREFL0	I/O	Analog signal input, VBIAS voltage output, or excitation current output pin, or reference ground pin for the 12-bit A/D converter
AIN9/AN003/VREFH0	I/O	Analog signal input, VBIAS voltage output, or excitation current output pin, or reference power supply pin for the 12-bit A/D converter
AIN10/AN004	I/O	Analog signal input, VBIAS voltage output, or excitation current output pin
AIN11/AN005	I/O	Analog signal input, VBIAS voltage output, or excitation current output pin
LSW	Output	Low-side switch connection pin

Table 33.4 Internal Signals Between AFE and DSAD (n = 0, 1; m = 0 to 5)

Signal Name	Function
VRnmP	Positive reference voltage for DSADn channel m
VRnmN	Negative reference voltage for DSADn channel m
ANDSnmP	Positive input signal for DSADn channel m
ANDSnmN	Negative input signal for DSADn channel m

Table 33.5 DSAD Internal Signals (n = 0, 1; m = 0 to 5)

Signal Name	Function
VRnP	Positive reference voltage for DSADn selected from among VRnmP
VRnN	Negative reference voltage for DSADn selected from among VRnmN
DSnP	Positive input signal for DSADn selected from among ANDSnmP
DSnN	Negative input signal for DSADn selected from among ANDSnmN

33.2 Register Descriptions

33.2.1 AFE Operation Control Register (OPCR)

Address(es): AFE.OPCR 000A 1400h

	b15	b14	b13	b12	b11	b10	b9	b8	b7	b6	b5	b4	b3	b2	b1	b0
	DSADLVM	—	—	—	—	—	—	—	—	—	DSAD1EN	DSAD0EN	IEXCEN	VBIASEN	VREFEN	TEMPSEN
Value after reset:	0	0	0	0	0	0	0	0	0	0	0	0	0	0	0	0

Bit	Symbol	Bit Name	Description	R/W
b0	TEMPSEN	Temperature Sensor Operation Enable	0: Disabled 1: Enabled	R/W
b1	VREFEN	Voltage Reference Operation Enable	0: Disabled 1: Enabled	R/W
b2	VBIASEN	Bias Voltage Generator Operation Enable	0: Disabled 1: Enabled	R/W
b3	IEXCEN	Excitation Current Source Operation Enable	0: Disabled 1: Enabled	R/W
b4	DSAD0EN	DSAD0 Operation Enable	0: Disabled 1: Enabled	R/W
b5	DSAD1EN	DSAD1 Operation Enable	0: Disabled 1: Enabled	R/W
b14 to b6	—	Reserved	These bits are read as 0. The write value should be 0.	R/W
b15	DSADLVM	DSAD Operating Voltage Select	0: AVCC0 = 3.6 to 5.5 V 1: AVCC0 = 2.7 to 5.5 V*1	R/W

Note 1. If the AVCC0 voltage is in the range from 3.6 to 5.5 V, the integral non-linearity (INL) is worse than when the setting of the bit is 0.

The OPCR register enables or disables the respective circuits.

TEMPSEN Bit (Temperature Sensor Operation Enable)

The TEMPSEN bit enables or disables the temperature sensor (TEMPS).
A wait of 400 µs is required for the temperature sensor to become stable after this bit has been set to 1.

VREFEN Bit (Voltage Reference Operation Enable)

The VREFEN bit enables or disables the voltage reference (VREF).
Setting this bit to 1 selects output of the voltage (2.5 V) generated by VREF from the REFOUT pin.
A wait of 1 ms is required for the output of VREF to become stable after this bit has been set to 1.

VBIASEN Bit (Bias Voltage Generator Operation Enable)

The VBIASEN bit enables or disables the bias voltage generator (VBIAS).
A period of waiting is required for the output of VBIAS to become stable after this bit has been set to 1. The length of this wait depends on the capacitance of the filter connected to the output pin selected for the output of V_{BIAS}. Refer to the electrical characteristics regarding the time required for the activation of VBIAS.

IEXCEN Bit (Excitation Current Source Operation Enable)

The IEXCEN bit enables or disables the excitation current source (IEXC).
A wait of 400 µs is required for the output of IEXC to become stable after this bit has been set to 1.

DSAD0EN Bit (DSAD0 Operation Enable)

The DSAD0EN bit enables or disables 24-bit delta-sigma A/D converter 0 (DSAD0), DSAD0 input voltage fault detector (DS0PDET, DS0NDET), and DSAD0 reference voltage fault detector (DS0RDET).
A wait of 400 µs is required for the DSAD0 to become activated after this bit has been set to 1.

DSAD1EN Bit (DSAD1 Operation Enable)

The DSAD1EN bit enables or disables 24-bit delta-sigma A/D converter 1 (DSAD1), DSAD1 input voltage fault detector (DS1PDET, DS1NDET), and DSAD1 reference voltage fault detector (DS1RDET).
A wait of 400 µs is required for the DSAD1 to become activated after this bit has been set to 1.

DSADLVM Bit (DSAD Operating Voltage Select)

The DSADLVM bit selects the operating voltage for DSAD0 and DSAD1.
When the AVCC0 voltage is lower than 3.6 V, set it to 1.
To use DSAD0 and DSAD1 with high precision, set the AVCC0 voltage to 3.6 V or higher, and set this bit to 0.

33.2.2 Voltage Detector Control Register (VDETCR)

Address(es): AFE.VDETCR 000A 1404h

	b15	b14	b13	b12	b11	b10	b9	b8	b7	b6	b5	b4	b3	b2	b1	b0
	VR1NDISC	VR1NDISA	VR1PDISC	VR1PDISA	VR0NDISC	VR0NDISA	VR0PDISC	VR0PDISA	—	—	DET1LVL[1:0]		—	—	—	DET0LVL
Value after reset:	0	0	0	0	0	0	0	0	0	0	0	1	0	0	0	1

Bit	Symbol	Bit Name	Description	R/W
b0	DET0LVL	LVDET0 Detection Level Setting	0: 2.00 V 1: 1.86 V	R/W
b3 to b1	—	Reserved	These bits are read as 0. The write value should be 0.	R/W
b5, b4	DET1LVL[1:0]	LVDET1 Detection Level Setting	b5 b4 0 0: 2.91 V 0 1: 2.82 V 1 0: 3.80 V 1 1: 3.70 V	R/W
b7, b6	—	Reserved	These bits are read as 0. The write value should be 0.	R/W
b8	VR0PDISA	VR0P Disconnect Detection Assist	0: Disconnect detection assist is disabled 1: Disconnect detection assist is enabled	R/W
b9	VR0PDISC	VR0P Disconnect Detection Charge Mode Setting	0: Discharge 1: Charge	R/W
b10	VR0NDISA	VR0N Disconnect Detection Assist	0: Disconnect detection assist is disabled 1: Disconnect detection assist is enabled	R/W
b11	VR0NDISC	VR0N Disconnect Detection Charge Mode Setting	0: Discharge 1: Charge	R/W
b12	VR1PDISA	VR1P Disconnect Detection Assist	0: Disconnect detection assist is disabled 1: Disconnect detection assist is enabled	R/W
b13	VR1PDISC	VR1P Disconnect Detection Charge Mode Setting	0: Discharge 1: Charge	R/W
b14	VR1NDISA	VR1N Disconnect Detection Assist	0: Disconnect detection assist is disabled 1: Disconnect detection assist is enabled	R/W
b15	VR1NDISC	VR1N Disconnect Detection Charge Mode Setting	0: Discharge 1: Charge	R/W

The VDETCR register selects detection conditions for the voltage detector.

DET0LVL Bit (LVDET0 Detection Level Setting)

The DET0LVL bit determines the level at which low voltage detector 0 for power supply (LVDET0) detects a low AVCC0 voltage.
It is suitable for detecting low voltages for the 12-bit A/D converter (S12AD).

DET1LVL[1:0] Bits (LVDET1 Detection Level Setting)

The DET1LVL[1:0] bits determine the level at which low voltage detector 1 for power supply (LVDET1) detects a low AVCC0 voltage.
It is suitable for detecting low voltages for the 24-bit delta-sigma A/D converters (DSADs) and analog front end (AFE).

VR0PDISA Bit (VR0P Disconnect Detection Assist)

The VR0PDISA bit enables the constant current sources to assist in detecting disconnection of the positive reference voltage for DSAD0 (VR0P).
Set this bit to 1 after or at the same time as setting of the VR0PDISC bit.

VR0PDISC Bit (VR0P Disconnect Detection Charge Mode Setting)

The VR0PDISC bit selects charge or discharge when using disconnect detection assist of VR0P.

VR0NDISA Bit (VR0N Disconnect Detection Assist)

The VR0NDISA bit enables the constant current sources to assist in detecting disconnection of the negative reference voltage for DSAD0 (VR0N).
Set this bit to 1 after or at the same time as setting of the VR0NDISC bit.

VR0NDISC Bit (VR0N Disconnect Detection Charge Mode Setting)

The VR0NDISC bit selects charge or discharge when using disconnect detection assist of VR0N.

VR1PDISA Bit (VR1P Disconnect Detection Assist)

The VR1PDISA bit enables the constant current sources to assist in detecting disconnection of the positive reference voltage for DSAD1 (VR1P).
Set this bit to 1 after or at the same time as setting of the VR1PDISC bit.

VR1PDISC Bit (VR1P Disconnect Detection Charge Mode Setting)

The VR1PDISC bit selects charge or discharge when using disconnect detection assist of VR1P.

VR1NDISA Bit (VR1N Disconnect Detection Assist)

The VR1NDISA bit enables the constant current sources to assist in detecting disconnection of the negative reference voltage for DSAD1 (VR1N).
Set this bit to 1 after or at the same time as setting of the VR1NDISC bit.

VR1NDISC Bit (VR1N Disconnect Detection Charge Mode Setting)

The VR1NDISC bit selects charge or discharge when using disconnect detection assist of VR1N.

33.2.3 Voltage Detection Enable Register (VDETER)

Address(es): AFE.VDETER 000A 1408h

	b15	b14	b13	b12	b11	b10	b9	b8	b7	b6	b5	b4	b3	b2	b1	b0
	—	DS1RDET	DS1NDET	DS1PDET	—	DS0RDET	DS0NDET	DS0PDET	IEXC3DET	IEXC2DET	IEXC1DET	IEXC0DET	—	—	LVDET1	LVDET0
Value after reset:	0	0	0	0	0	0	0	0	0	0	0	0	0	0	0	0

Bit	Symbol	Bit Name	Description	R/W
b0	LVDET0	LVDET0 Operation Enable	0: Stopped, or an out-of-range condition was detected. 1: Operating	R/W
b1	LVDET1	LVDET1 Operation Enable	0: Stopped, or an out-of-range condition was detected. 1: Operating	R/W
b3, b2	—	Reserved	These bits are read as 0. The write value should be 0.	R/W
b4	IEXC0DET	IEXC0DET Operation Enable	0: Stopped, or an out-of-range condition was detected. 1: Operating	R/W
b5	IEXC1DET	IEXC1DET Operation Enable	0: Stopped, or an out-of-range condition was detected. 1: Operating	R/W
b6	IEXC2DET	IEXC2DET Operation Enable	0: Stopped, or an out-of-range condition was detected. 1: Operating	R/W
b7	IEXC3DET	IEXC3DET Operation Enable	0: Stopped, or an out-of-range condition was detected. 1: Operating	R/W
b8	DS0PDET	DS0PDET Operation Enable	0: Stopped, or an out-of-range condition was detected. 1: Operating	R/W
b9	DS0NDET	DS0NDET Operation Enable	0: Stopped, or an out-of-range condition was detected. 1: Operating	R/W
b10	DS0RDET	DS0RDET Operation Enable	0: Stopped, or an out-of-range condition was detected. 1: Operating	R/W
b11	—	Reserved	This bit is read as 0. The write value should be 0.	R/W
b12	DS1PDET	DS1PDET Operation Enable	0: Stopped, or an out-of-range condition was detected. 1: Operating	R/W
b13	DS1NDET	DS1NDET Operation Enable	0: Stopped, or an out-of-range condition was detected. 1: Operating	R/W
b14	DS1RDET	DS1RDET Operation Enable	0: Stopped, or an out-of-range condition was detected. 1: Operating	R/W
b15	—	Reserved	This bit is read as 0. The write value should be 0.	R/W

The VDETER register controls operation of the voltage detector and the disconnect detection assist circuit, and indicates their states.

LVDET0 Bit (LVDET0 Operation Enable)

The LVDET0 bit is used to detect the out-of-range conditions in the AVCC0 voltage.
Select the voltage for detection in the VDETCR.DET0LVL bit.
Setting this bit to 1 starts operation of low voltage detector 0 for power supply (LVDET0). When the AVCC0 voltage falls below the detection voltage, this bit becomes 0 and LVDET0 stops.

LVDET1 Bit (LVDET1 Operation Enable)

The LVDET1 bit is used to detect the out-of-range conditions in the AVCC0 voltage.
Select the voltage for detection in the VDETCR.DET1LVL[1:0] bits.
Setting this bit to 1 starts operation of low voltage detector 1 for power supply (LVDET1). When the AVCC0 voltage falls below the detection voltage, this bit becomes 0 and LVDET1 stops.

IEXCkDET Bits (IEXCkDET Operation Enable) (k = 0 to 3)

The IEXCkDET bits is used to assist in the detection of disconnection between the output pins for the excitation current sources (IEXC) and external sensors.
Select the amount of charge current for disconnect detection in the EXCCR.CUR[2:0] bits and the pin in the EXCOSR register.
Setting this bit to 1 starts operation of the IEXCk output disconnect detectors (IEXCkDET). If the voltage on the IEXCk output pin closely approaches AVCC0, this bit becomes 0 and IEXCkDET stops.

DS0PDET Bit (DS0PDET Operation Enable)

The DS0PDET bit is used to detect the out-of-range conditions of the positive input voltage of DSAD0 (DS0P).
This function is usable from the start of auto scan until the auto scan stops.
Setting this bit to 1 starts operation of the voltage fault detector for the positive input voltage of DSAD0 (DS0PDET). If the voltage of DS0P exceeds the input voltage range, this bit becomes 0 and DS0PDET stops.

DS0NDET Bit (DS0NDET Operation Enable)

The DS0NDET bit is used to detect the out-of-range conditions of the negative input voltage of DSAD0 (DS0N).
This function is usable from the start of auto scan until the auto scan stops.
Setting this bit to 1 starts operation of the voltage fault detector for the negative input voltage of DSAD0 (DS0NDET). If the voltage of DS0N exceeds the input voltage range, this bit becomes 0 and DS0NDET stops.

DS0RDET Bit (DS0RDET Operation Enable)

The DS0RDET bit is used to detect the out-of-range condition of the voltage difference between the positive and negative reference voltages (VR0P and VR0N) as well as the individual out-of-range conditions of the VR0P and VR0N.
This function is usable from the start of auto scan until the auto scan stops.
Use this function with the DS0mISR.RSEL[3:0] bits set to 1011b or 1111b.
Select enabling or disabling of disconnect detection assist in the VR0PDISA and VR0NDISA bits, and charge or discharge for disconnect detection in the VR0PDISC and VR0NDISC bits of the VDETCR register.
Setting this bit to 1 starts operation of the voltage fault detector for the reference voltages of DSAD0 (DS0RDET). If the difference between the VR0P and VR0N voltages becomes too small or either or both of the voltages closely approaches AVCC0 or AVSS0 due to charge or discharge, this bit becomes 0 and the DS0RDET circuit stops.

DS1PDET Bit (DS1PDET Operation Enable)

The DS1PDET bit is used to detect the out-of-range conditions of the positive input voltage of DSAD1 (DS1P).
This function is usable from the start of auto scan until the auto scan stops.
Setting this bit to 1 starts operation of the voltage fault detector for the positive input voltage of DSAD1 (DS1PDET). If the voltage of DS1P exceeds the input voltage range, this bit becomes 0 and DS1PDET stops.

DS1NDET Bit (DS1NDET Operation Enable)

The DS1NDET bit is used to detect the out-of-range conditions of the negative input voltage of DSAD1 (DS1N).
This function is usable from the start of auto scan until the auto scan stops.
Setting this bit to 1 starts operation of the voltage fault detector for the negative input voltage of DSAD1 (DS1NDET). If the voltage of DS1N exceeds the input voltage range, this bit becomes 0 and DS1NDET stops.

DS1RDET Bit (DS1RDET Operation Enable)

The DS1RDET bit is used to detect the out-of-range condition of the voltage difference between the positive and negative reference voltages (VR1P and VR1N) as well as the individual out-of-range conditions of the VR1P and VR1N.
This function is usable from the start of auto scan until the auto scan stops.
Use this function with the DS1mISR.RSEL[3:0] bits set to 1011b or 1111b.
Select enabling or disabling of disconnect detection assist in the VR1PDISA and VR1NDISA bits, and charge or

discharge for disconnect detection in the VR1PDISC and VR1NDISC bits in the VDETCR register.
Setting this bit to 1 starts operation of the voltage fault detector for the reference voltages of DSAD1 (DS1RDET). If the difference between the VR1P and VR1N voltages becomes too small or either or both of the voltages closely approaches AVCC0 or AVSS0 due to charge or discharge, this bit becomes 0 and the DS1RDET circuit stops.

33.2.4 Bias Voltage Output Select Register (VBOSR)

Address(es): AFE.VBOSR 000A 140Ch

	b15	b14	b13	b12	b11	b10	b9	b8	b7	b6	b5	b4	b3	b2	b1	b0
	—	—	—	—	VBIAS EN11	VBIAS EN10	VBIAS EN9	VBIAS EN8	VBIAS EN7	VBIAS EN6	VBIAS EN5	VBIAS EN4	VBIAS EN3	VBIAS EN2	VBIAS EN1	VBIAS EN0
Value after reset:	0	0	0	0	0	0	0	0	0	0	0	0	0	0	0	0

Bit	Symbol	Bit Name	Description	R/W
b0	VBIASEN0	AIN0 Pin VBIAS Output Control	0: Do not output. 1: Output V_{BIAS}.	R/W
b1	VBIASEN1	AIN1 Pin VBIAS Output Control		R/W
b2	VBIASEN2	AIN2 Pin VBIAS Output Control		R/W
b3	VBIASEN3	AIN3 Pin VBIAS Output Control		R/W
b4	VBIASEN4	AIN4 Pin VBIAS Output Control		R/W
b5	VBIASEN5	AIN5 Pin VBIAS Output Control		R/W
b6	VBIASEN6	AIN6 Pin VBIAS Output Control		R/W
b7	VBIASEN7	AIN7 Pin VBIAS Output Control		R/W
b8	VBIASEN8	AIN8 Pin VBIAS Output Control		R/W
b9	VBIASEN9	AIN9 Pin VBIAS Output Control		R/W
b10	VBIASEN10	AIN10 Pin VBIAS Output Control		R/W
b11	VBIASEN11	AIN11 Pin VBIAS Output Control		R/W
b15 to b12	—	Reserved	These bits are read as 0. The write value should be 0.	R/W

Note: Do not rewrite this register while the OPCR.VBIASEN bit is 1 (enabled).

The VBOSR register selects output of the generated bias voltage (V_{BIAS}) from pins among AIN0 to AIN11.

VBIASENx Bits (AINx Pin VBIAS Output Control) (x = 0 to 11)

Each VBIASENx bit selects whether the corresponding pin is to output V_{BIAS} or not. Setting a bit to 1 starts the output of V_{BIAS} on the corresponding AINx pin.

33.2.5 Temperature Sensor Zeroth-Order Temperature Coefficient Register (TC0R)

Address(es): AFE.TC0R 000A 1410h

	b31	b30	b29	b28	b27	b26	b25	b24	b23	b22	b21	b20	b19	b18	b17	b16
Value after reset:	Coefficient per chip															

	b15	b14	b13	b12	b11	b10	b9	b8	b7	b6	b5	b4	b3	b2	b1	b0
Value after reset:	Coefficient per chip															

The TC0R is a read-only register which contains the value of the zeroth-order temperature correction coefficient *c* as a single-precision floating-point number.
A correction coefficient per device is written to the register at the time of shipment from the factory.
The temperature correction formula is $ax^2 + bx + c$.

33.2.6 Temperature Sensor First-Order Temperature Coefficient Register (TC1R)

Address(es): AFE.TC1R 000A 1414h

	b31	b30	b29	b28	b27	b26	b25	b24	b23	b22	b21	b20	b19	b18	b17	b16
Value after reset:	Coefficient per chip															

	b15	b14	b13	b12	b11	b10	b9	b8	b7	b6	b5	b4	b3	b2	b1	b0
Value after reset:	Coefficient per chip															

The TC1R is a read-only register which contains the value of the first-order temperature correction coefficient *b* as a single-precision floating-point number.
A correction coefficient per device is written to the register at the time of shipment from the factory.
The temperature correction formula is $ax^2 + bx + c$.

33.2.7 Temperature Sensor Second-Order Temperature Coefficient Register (TC2R)

Address(es): AFE.TC2R 000A 1418h

	b31	b30	b29	b28	b27	b26	b25	b24	b23	b22	b21	b20	b19	b18	b17	b16
Value after reset:	Coefficient per chip															

	b15	b14	b13	b12	b11	b10	b9	b8	b7	b6	b5	b4	b3	b2	b1	b0
Value after reset:	Coefficient per chip															

The TC2R is a read-only register which contains the value of the second-order temperature correction coefficient *a* as a single-precision floating-point number.
A correction coefficient per device is written to the register at the time of shipment from the factory.
The temperature correction formula is $ax^2 + bx + c$.

33.2.8 Low-Side Switch Control Register (LSWC)

Address(es): AFE.LSWC 000A 141Ch

	b7	b6	b5	b4	b3	b2	b1	b0
	—	—	—	—	—	—	—	LSWEN
Value after reset:	0	0	0	0	0	0	0	0

Bit	Symbol	Bit Name	Description	R/W
b0	LSWEN	Low-Side Switch Control	0: Switch turned off 1: Switch turned on	R/W
b7 to b1	—	Reserved	These bits are read as 0. The write value should be 0.	R/W

The LSWC register controls turning on or off the low-side switch (LSW).

LSWEN Bit (Low-Side Switch Control)

The LSWEN bit controls the low-side switch. Setting this bit to 1 turns the switch on and connects the LSW pin with AVSS0.

33.2.9 DSAD0 Channel m Input Select Register (DS0mISR) (m = 0 to 5)

Address(es): AFE.DS00ISR 000A 1420h, AFE.DS01ISR 000A 1424h, AFE.DS02ISR 000A 1428h, AFE.DS03ISR 000A 142Ch, AFE.DS04ISR 000A 1430h, AFE.DS05ISR 000A 1434h

	b15	b14	b13	b12	b11	b10	b9	b8	b7	b6	b5	b4	b3	b2	b1	b0
	TSEN	—	—	—	RSEL[3:0]				NSEL[3:0]				PSEL[3:0]			
Value after reset:	0	0	0	0	0	0	0	0	1	1	1	1	1	1	1	1

Bit	Symbol	Bit Name	Description	R/W
b3 to b0	PSEL[3:0]	Positive Input Signal Select	b3 b0 0 0 0 0: AIN0 pin 0 0 0 1: AIN1 pin 0 0 1 0: AIN2 pin 0 0 1 1: AIN3 pin 0 1 0 0: AIN4 pin 0 1 0 1: AIN5 pin 0 1 1 0: AIN6 pin 0 1 1 1: AIN7 pin 1 0 0 0: AIN8 pin 1 0 0 1: AIN9 pin 1 0 1 0: AIN10 pin 1 0 1 1: AIN11 pin 1 1 0 0: Setting for the offset error measurement*1 1 1 1 1: No connection Settings other than above are prohibited.	R/W
b7 to b4	NSEL[3:0]	Negative Input Signal Select	b7 b4 0 0 0 0: AIN0 pin 0 0 0 1: AIN1 pin 0 0 1 0: AIN2 pin 0 0 1 1: AIN3 pin 0 1 0 0: AIN4 pin 0 1 0 1: AIN5 pin 0 1 1 0: AIN6 pin 0 1 1 1: AIN7 pin 1 0 0 0: AIN8 pin 1 0 0 1: AIN9 pin 1 0 1 0: AIN10 pin 1 0 1 1: AIN11 pin 1 1 1 1: No connection Settings other than above are prohibited.	R/W
b8	RSEL[3:0]	Reference Voltage Select	0: Positive reference buffer is disabled. 1: Positive reference buffer is enabled.	R/W
b9			0: Negative reference buffer is disabled. 1: Negative reference buffer is enabled.	R/W
b11, b10			b11 b10 0 0: AVCC0/AVSS0*2 0 1: REFOUT/AVSS0*2 1 0: REF0P/REF0N 1 1: REF1P/REF1N	R/W
b14 to b12	—	Reserved	These bits are read as 0. The write value should be 0.	R/W
b15	TSEN	Temperature Sensor Connection	0: The temperature sensor is disconnected. 1: The temperature sensor is connected.	R/W

Note: Set this register after setting the OPCR.DSAD0EN bit to 1 (DSAD0 operation enabled).
Note 1. When the setting of the PSEL[3:0] bits is 1100b, the voltage (AVCC0 + AVSS0) / 2 is input to both the positive and negative inputs of DSAD0. Starting A/D conversion with this as the setting allows measurement of the offset error. In this case, set the NSEL[3:0] bits to 1111b.
Note 2. The reference voltages are provided without reference buffers when the selection is AVCC0/AVSS0 or REFOUT/AVSS0.

The 24-bit delta-sigma A/D converter 0 (DSAD0) selects one of the six differential input channels for A/D-conversion and selects the reference voltage per channel for use in A/D conversion. The DS0mISR registers are used to select the

positive and negative input signals, and the positive and negative reference voltages for each channel. They are also used to control the on-chip temperature sensor.

PSEL[3:0] Bits (Positive Input Signal Select), NSEL[3:0] Bits (Negative Input Signal Select)

These bits are used to select the signals for positive and negative inputs to DSAD0 channel m (ANDS0mP and ANDS0mN).
The settings are reflected in the analog multiplexer (AMUX) when the auto scan starts. When the auto scan stops, the inputs to all channels of DSAD0 are disconnected.

RSEL[3:0] Bits (Reference Voltage Select)

These bits are used to select the reference voltages for DSAD0 channel m (VR0mP and VR0mN) and whether they are provided via buffers (reference buffers) or not.
The settings are reflected in the analog multiplexer (AMUX) when the auto scan starts. When the auto scan stops, the inputs to all channels of DSAD0 are disconnected.

Table 33.6 Settings for the RSEL[3:0] Bits and the Selected Reference Voltage

	Reference Voltage to be Input to DSAD0			
RSEL[3:0]	**VR0mP**	**Positive Reference Buffer**	**VR0mN**	**Negative Reference Buffer**
0000b to 0011b	AVCC0	Disabled	AVSS0	Disabled
0100b to 0111b	REFOUT	Disabled	AVSS0	Disabled
1000b	REF0P	Disabled	REF0N	Disabled
1001b		Enabled		Disabled
1010b		Disabled		Enabled
1011b		Enabled		Enabled
1100b	REF1P	Disabled	REF1N	Disabled
1101b		Enabled		Disabled
1110b		Disabled		Enabled
1111b		Enabled		Enabled

TSEN Bit (Temperature Sensor Connection)

The TSEN bit selects whether the on-chip temperature sensor is to be connected to or disconnected from the given channel of DSAD0.
When this bit is set to 1, settings of the PSEL[3:0], NSEL[3:0], and RSEL[3:0] bits are ignored and the effective settings are switched to those for measuring the temperature sensor output.

33.2.10 DSAD1 Channel m Input Select Register (DS1mISR) (m = 0 to 5)

Address(es): AFE.DS10ISR 000A 1438h, AFE.DS11ISR 000A 143Ch, AFE.DS12ISR 000A 1440h, AFE.DS13ISR 000A 1444h, AFE.DS14ISR 000A 1448h, AFE.DS15ISR 000A 144Ch

	b15	b14	b13	b12	b11	b10	b9	b8	b7	b6	b5	b4	b3	b2	b1	b0
	—	—	—	—	RSEL[3:0]				NSEL[3:0]				PSEL[3:0]			
Value after reset:	0	0	0	0	0	0	0	0	1	1	1	1	1	1	1	1

Bit	Symbol	Bit Name	Description	R/W
b3 to b0	PSEL[3:0]	Positive Input Signal Select	b3 b0 0 0 0 0: AIN0 pin 0 0 0 1: AIN1 pin 0 0 1 0: AIN2 pin 0 0 1 1: AIN3 pin 0 1 0 0: AIN4 pin 0 1 0 1: AIN5 pin 0 1 1 0: AIN6 pin 0 1 1 1: AIN7 pin 1 0 0 0: AIN8 pin 1 0 0 1: AIN9 pin 1 0 1 0: AIN10 pin 1 0 1 1: AIN11 pin 1 1 0 0: Setting for the offset error measurement*1 1 1 1 1: No connection Settings other than above are prohibited.	R/W
b7 to b4	NSEL[3:0]	Negative Input Signal Select	b7 b4 0 0 0 0: AIN0 pin 0 0 0 1: AIN1 pin 0 0 1 0: AIN2 pin 0 0 1 1: AIN3 pin 0 1 0 0: AIN4 pin 0 1 0 1: AIN5 pin 0 1 1 0: AIN6 pin 0 1 1 1: AIN7 pin 1 0 0 0: AIN8 pin 1 0 0 1: AIN9 pin 1 0 1 0: AIN10 pin 1 0 1 1: AIN11 pin 1 1 1 1: No connection Settings other than above are prohibited.	R/W
b8	RSEL[3:0]	Reference Voltage Select	0: Positive reference buffer is disabled. 1: Positive reference buffer is enabled.	R/W
b9			0: Negative reference buffer is disabled. 1: Negative reference buffer is enabled.	R/W
b11, b10			b11 b10 0 0: AVCC0/AVSS0*2 0 1: REFOUT/AVSS0*2 1 0: REF0P/REF0N 1 1: REF1P/REF1N	R/W
b15 to b12	—	Reserved	These bits are read as 0. The write value should be 0.	R/W

Note: Set this register after setting the OPCR.DSAD1EN bit to 1 (DSAD1 operation enabled).

Note 1. When the setting of the PSEL[3:0] bits is 1100b, the voltage (AVCC0 + AVSS0) / 2 is input to both the positive and negative inputs of DSAD1. Starting A/D conversion with this as the setting allows measurement of the offset error. In this case, set the NSEL[3:0] bits to 1111b.

Note 2. The reference voltages are provided without reference buffers when the selection is AVCC0/AVSS0 or REFOUT/AVSS0.

The 24-bit delta-sigma A/D converter 1 (DSAD1) selects one of the six differential input channels for A/D-conversion and selects the reference voltage per channel for use in A/D conversion. The DS1mISR registers are used to select the positive and negative input signals, and the positive and negative reference voltages for the six channels.

PSEL[3:0] Bits (Positive Input Signal Select), NSEL[3:0] Bits (Negative Input Signal Select)

These bits are used to select the signals for positive and negative inputs to DSAD1 channel m (ANDS1mP and ANDS1mN).

The settings are reflected in the analog multiplexer (AMUX) when the auto scan starts. When the auto scan stops, the inputs to all channels of DSAD1 are disconnected.

RSEL[3:0] Bits (Reference Voltage Select)

These bits are used to select the reference voltages for DSAD1 channel m (VR1mP and VR1mN) and whether they are provided via buffers (reference buffers) or not.

The settings are reflected in the analog multiplexer (AMUX) when the auto scan starts. When the auto scan stops, the inputs to all channels of DSAD1 are disconnected.

Table 33.7 Settings for the RSEL[3:0] Bits and the Selected Reference Voltage

	Reference Voltage to be Input to DSAD1			
RSEL[3:0]	**VR1mP**	**Positive Reference Buffer**	**VR1mN**	**Negative Reference Buffer**
0000b to 0011b	AVCC0	Disabled	AVSS0	Disabled
0100b to 0111b	REFOUT	Disabled	AVSS0	Disabled
1000b	REF0P	Disabled	REF0N	Disabled
1001b		Enabled		Disabled
1010b		Disabled		Enabled
1011b		Enabled		Enabled
1100b	REF1P	Disabled	REF1N	Disabled
1101b		Enabled		Disabled
1110b		Disabled		Enabled
1111b		Enabled		Enabled

33.2.11 Excitation Current Control Register (EXCCR)

Address(es): AFE.EXCCR 000A 1450h

	b7	b6	b5	b4	b3	b2	b1	b0
	—	—	—	MODE	—	CUR[2:0]		
Value after reset:	0	0	0	0	0	0	0	0

Bit	Symbol	Bit Name	Description	R/W
b2 to b0	CUR[2:0]	Excitation Current Setting	b2 b0 0 0 0: 50 μA 0 0 1: 100 μA 0 1 0: 250 μA 0 1 1: 500 μA 1 0 0: 750 μA*1 1 0 1: 1000 μA*1 Other than those above: Setting prohibited	R/W
b3	—	Reserved	This bit is read as 0. The write value should be 0.	R/W
b4	MODE	Operation Mode Select	0: 2-channel output mode 1: 4-channel output mode	R/W
b7 to b5	—	Reserved	These bits are read as 0. The write value should be 0.	R/W

Note: Do not rewrite this register while the OPCR.IEXCEN bit is 1 (enabled).
Note 1. This setting is only available in 2-channel output mode. Do not set this value in 4-channel output mode.

CUR[2:0] Bits (Excitation Current Setting)

The CUR[2:0] bits select the output current from the excitation current sources. All channels have the same value. The output is up to 1000 μA in 2-channel output mode, and up to 500 μA in 4-channel output mode.

MODE Bit (Operation Mode Select)

The MODE bit selects the number of operating excitation current sources.
Either 2-channel output (IEXC0 and IEXC1) or 4-channel output (IEXC0 to IEXC3) can be selected.

33.2.12 Excitation Current Output Select Register (EXCOSR)

Address(es): AFE.EXCOSR 000A 1454h

	b15	b14	b13	b12	b11	b10	b9	b8	b7	b6	b5	b4	b3	b2	b1	b0
	IEXC3SEL[3:0]				IEXC2SEL[3:0]				IEXC1SEL[3:0]				IEXC0SEL[3:0]			
Value after reset:	1	1	1	1	1	1	1	1	1	1	1	1	1	1	1	1

Bit	Symbol	Bit Name	Description	R/W
b3 to b0	IEXC0SEL[3:0]	IEXC0 Output Pin Select	These bits select the pins to be used for output from the excitation current sources*1. b3 b0 0 0 0 0: AIN0 pin 0 0 0 1: AIN1 pin 0 0 1 0: AIN2 pin 0 0 1 1: AIN3 pin 0 1 0 0: AIN4 pin 0 1 0 1: AIN5 pin 0 1 1 0: AIN6 pin 0 1 1 1: AIN7 pin 1 0 0 0: AIN8 pin 1 0 0 1: AIN9 pin 1 0 1 0: AIN10 pin 1 0 1 1: AIN11 pin 1 1 1 1: Output disabled Settings other than above are prohibited.	R/W
b7 to b4	IEXC1SEL[3:0]	IEXC1 Output Pin Select		R/W
b11 to b8	IEXC2SEL[3:0]	IEXC2 Output Pin Select*2		R/W
b15 to b12	IEXC3SEL[3:0]	IEXC3 Output Pin Select*2		R/W

Note: Do not rewrite this register while the OPCR.IEXCEN bit is 1 (enabled).
Note 1. Do not select a single pin as the output of multiple excitation current sources.
Note 2. These bits are only effective when the EXCCR.MODE bit is 1 (4-channel output mode).

IEXCkSEL[3:0] Bits (IEXCk Output Pin Select) (k = 0 to 3)

The IEXCkSEL[3:0] bits select pins from among AIN0 to AIN11 to be used as outputs from the excitation current sources (IEXCk).

33.3 Operation

The composition of the analog front end (AFE) is broadly divided into the analog multiplexer (AMUX), the voltage reference (VREF), the bias voltage generator (VBIAS), the temperature sensor (TEMPS), the excitation current sources (IEXC), and the voltage detector (VDET).
This section describes the operation of these components.

33.3.1 Analog Multiplexer (AMUX)

The analog multiplexer selects the analog signals and the reference voltages for input to the 24-bit delta-sigma A/D converters (DSADn; n = 0, 1). The settings of the DSnmISR registers are reflected in AMUX from setting of the DSADn.ADST.START bit to 1 (start auto scan) until auto scan stops (m = 0 to 5).

Examples of settings of the registers under various conditions are described here.

(1) Setting the input signals and reference voltages for DSADn

Set the input signals and reference voltages for DSADn as follows.

(1) Stop the A/D conversion of DSADn.
(2) Set the DSnmISR.PSEL[3:0] bits to select the positive input signal for DSADn channel m (ANDSnmP).
(3) Set the DSnmISR.NSEL[3:0] bits to select the negative input signal for DSADn channel m (ANDSnmN).
(4) Set the DSnmISR.RSEL[3:0] bits to select the reference voltage for DSADn channel m (VRnmP and VRnmN).
(5) Restart the A/D conversion of DSADn.

Making settings (2) to (4) in the listed order is not necessary. Making them at the same time does not cause any problem.
DSAD0 and DSAD1 each have six DSnmISR registers, by which the A/D-conversion of any set of analog signals can be performed by selecting the scan mode and channels for the given DSAD. For details, refer to section 34, 24-bit Delta-Sigma A/D Converters (DSADA).

(2) Using V_{BIAS} as the negative input signal for DSAD0

The procedure for A/D conversion of the input signal on the AIN0 pin using V_{BIAS} as the negative input signal for DSAD0 is as follows.
V_{BIAS} will be output from the AIN1 pin.

(1) Stop the A/D conversion of DSAD0.
(2) Set the VBOSR.VBIASEN1 bit to 1 (output from the AIN1 pin).
(3) Set the DS0mISR.PSEL[3:0] bits to 0000b (AIN0 pin).
(4) Set the DS0mISR.NSEL[3:0] bits to 0001b (AIN1 pin).
(5) Set the DS0mISR.RSEL[3:0] bits to any value.
(6) Restart the A/D conversion of DSAD0.

Making settings (2) to (5) in the listed order is not necessary. Making settings (3) to (5) at the same time does not cause any problem.

(3) Using the temperature sensor

The procedure for using DSAD0*1 to measure the output from the on-chip temperature sensor is as follows.

(1) Stop the A/D conversion of DSAD0.
(2) Set the OPCR.TEMPSEN bit to 1 to enable the temperature sensor.
(3) Wait for the stabilization time of the temperature sensor.
(4) Set the DS0mISR.TSEN bit to 1 *2.
(5) Start the A/D conversion of DSAD0.

Note 1. The temperature sensor can only be connected to DSAD0.
Note 2. When TSEN bit is set to 1, settings of the PSEL[3:0], NSEL[3:0], and RSEL[3:0] bits are ignored and the effective settings are switched to those for measuring the temperature sensor output.

33.3.2 Voltage Reference (VREF)

The voltage reference (VREF) generates a constant voltage of 2.5 V. It can be used as the power supply for the sensor or as the positive reference voltage for the 24-bit delta-sigma A/D converter (DSAD).
Setting the OPCR.VREFEN bit to 1 starts the output of 2.5 V from the REFOUT pin. The load current is up to ±10 mA.

An example of connection when using the output of VREF (REFOUT) as the positive reference voltage for DSAD0 is shown in Figure 33.5.

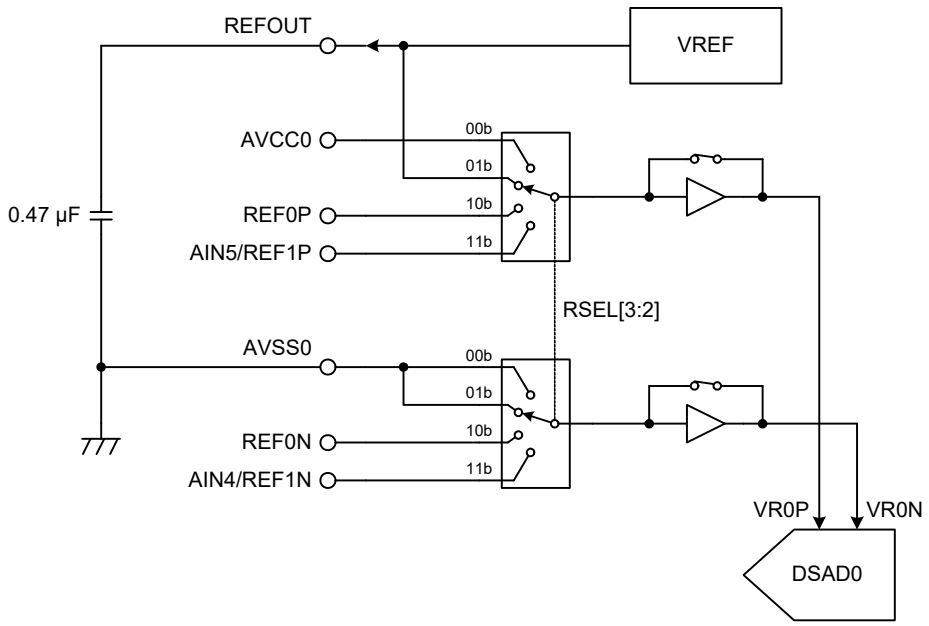

Note 1. A diagram shown above is an example of the connections when the setting of the DS0mISR.RSEL[3:2] bits is 01b.

Figure 33.5 Example of Using the Output of VREF (REFOUT) as the Positive Reference Voltage for DSAD0

33.3.3 Bias Voltage Generator (VBIAS)

The bias voltage generator (VBIAS) generates a voltage of (AVCC0 + AVSS0) / 2. The generated bias voltage (V_{BIAS}) can be output externally to the MCU on the AIN0 to AIN11 pins. To use V_{BIAS} in a circuit outside the MCU, connect it to a high-impedance circuit.

Figure 33.6 shows an example of connection of the output of VBIAS to the AIN0 pin to provide it as the negative input for DSAD0.

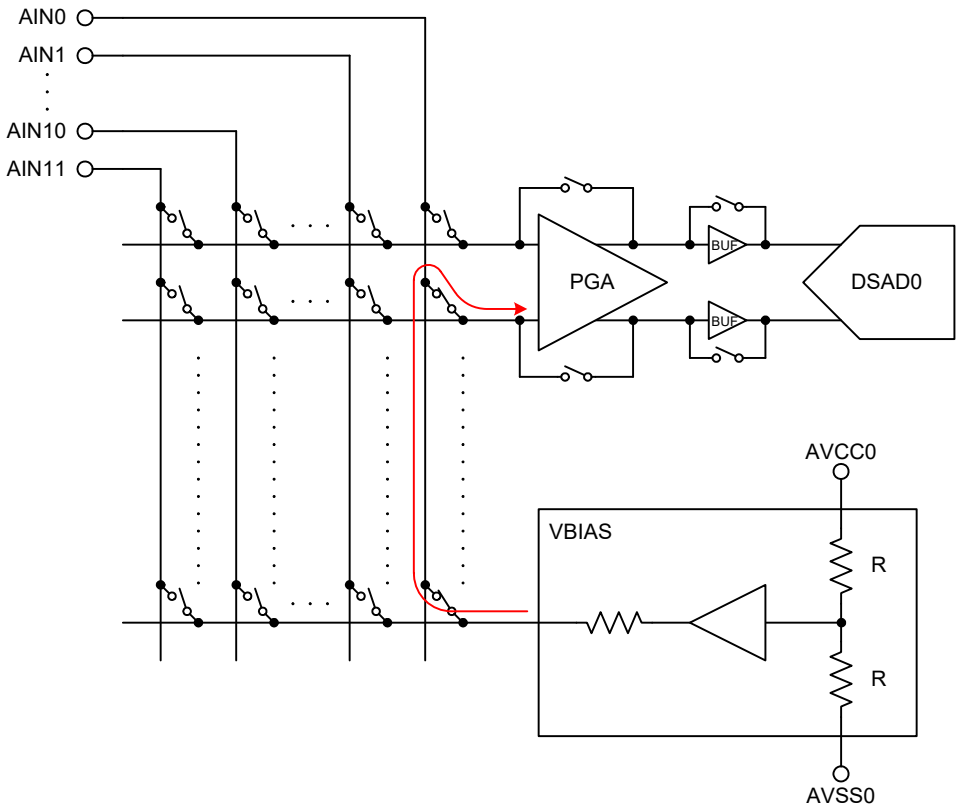

Note 1. The diagram above is an example where the setting of the DS0mISR.NSEL[3:0] bits is 0000b (connecting the AIN0 pin to the negative input for DSAD0) and that of the VBOSR.VBIASEN0 bit is 1 (selecting output of V_{BIAS} from the AIN0 pin).

Figure 33.6 Example of Connection of the VBIAS to a PGA

When using VBIAS, enable the PGA or analog input buffer (BUF) so that the output impedance does not degrade the accuracy of A/D converter.

33.3.4 Temperature Sensor (TEMPS)

The internal temperature of the MCU can be measured by converting the voltage output from the temperature sensor to a digital value by using 24-bit delta-sigma A/D converter 0 (DSAD0) and substituting the value into the equation given below.

Figure 33.7 shows the connections when using DSAD0 to measure the output of the temperature sensor.

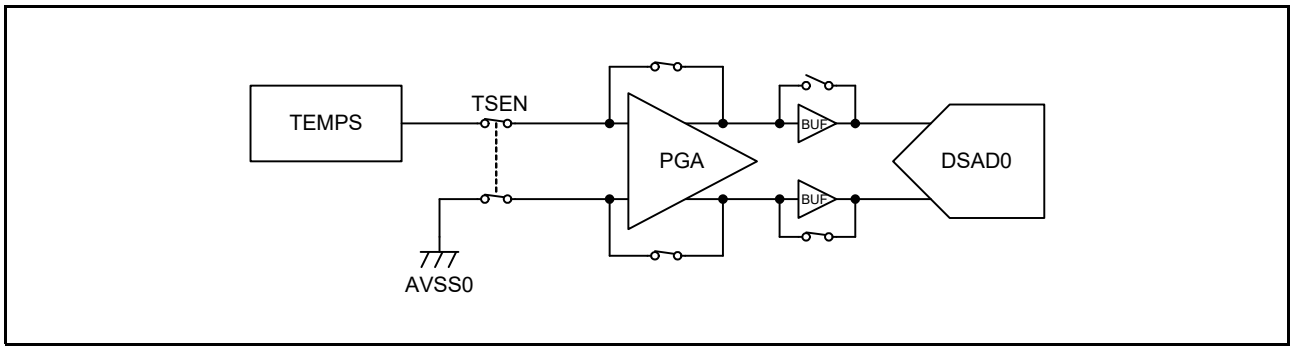

Figure 33.7 Using the TEMPS

To use the temperature sensor (TEMPS), set the OPCR.TEMPSEN bit to 1 and then set the DS0mISR.TSEN bit to 1. This causes connection of the output of TEMPS to the positive input of DSAD0 via the analog input buffer (BUF) and of the negative input of DSAD0 to AVSS0. When the TSEN bit is set to 1, values set in bits other than the TSEN bit in the DS0mISR register become ineffective.

After the above procedure, the temperature is obtained by performing A/D conversion in DSAD0 and substituting the result of conversion (x) into the following quadratic equation. The respective coefficients of the equation are held in the TC0R, TC1R, and TC2R registers.

Temperature = $ax^2 + bx + c$ (°C)

a: Value of the TC2R register

b: Value of the TC1R register

c: Value of the TC0R register

33.3.5 Excitation Current Sources (IEXC)

The excitation current sources (IEXCk) (k = 0 to 3) are circuits which can generate constant currents of 50 to 1000 µA in 2-channel output mode or 50 to 500 µA in 4-channel output mode. The generated currents can be output from the AIN0 to AIN11 pins.

Figure 33.8 shows an example of the output of 100 µA from the AIN0 and AIN4 pins in 2-channel output mode.

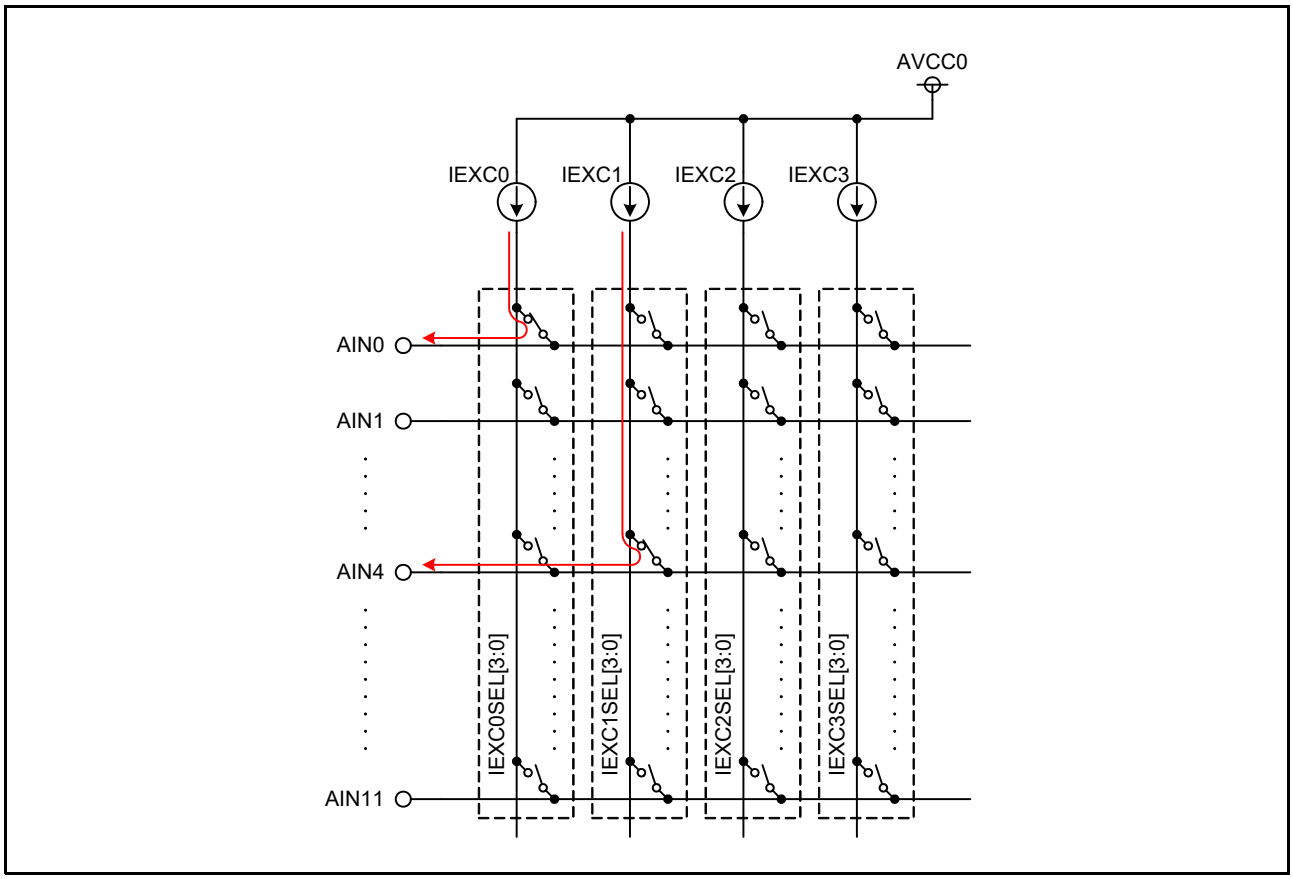

Figure 33.8 Example of Settings for the IEXC

(1) Set the OPCR.IEXCEN bit to 0 to disable the IEXC.

(2) Set the EXCCR.CUR[2:0] bits to 001b to select 100 µA, and set the MODE bit to 0 to select the 2-channel output mode.

(3) Set the EXCOSR.IEXC0SEL[3:0] bits to 0000b to select AIN0 pin, and set the IEXC1SEL[3:0] bits to 0100b to select AIN4 pin.

(4) Set the OPCR.IEXCEN bit to 1 to enable the IEXC.

33.3.6 Voltage Detector (VDET)

The following four circuits are present in the voltage detector (VDET): the low voltage detector for power supply (LVDET), the DSAD input voltage fault detector (DSIDET), the DSAD reference voltage fault detector (DSRDET), and the excitation current source disconnect detector (IEXCDET).

Setting the OPCR register to enable the required circuits starts the reference voltage generator for the VDET.
After that, the corresponding detectors starts when the setting of detection conditions and detection mode by the VDETCR register followed by the setting of desired bits in the VDETER register to 1 is made.
Although the value of the VDETCR register can be changed after starting detectors (by using the VDETER register), errors in detection may be caused due to the characteristics changing in response to the change to the setting.

33.3.6.1 Low Voltage Detector for Power Supply (LVDET)

Each low voltage detector for power supply (LVDET) detects the AVCC0 supply voltage falls, and there are two circuits: one (LVDET0) for the 12-bit A/D converter (S12AD), and the other (LVDET1) for the 24-bit delta-sigma A/D converter (DSAD) and analog front end (AFE).
The operating voltage range for S12AD is 1.8 to 5.5 V. LVDET0 can detect AVCC0 having fallen below 1.86 or 2.00 V (typ.). Set the detection voltage in the VDETCR.DET0LVL bit and then set the VDETER.LVDET0 bit to 1. If the voltage of AVCC0 falls below the set voltage, the LVDET0 bit becomes 0 and LVDET0 stops operating. Detection of AVCC0 has non-responsive periods of 20 µs.
The operating voltage range for the DSADs and AFE is 2.7 to 5.5 V. LVDET1 can detect AVCC0 falling below any voltage from among 2.82, 2.91, 3.70, and 3.80 V (typ.). Set the detection voltage in the VDETCR.DET1LVL[1:0] bits and then set the VDETER.LVDET1 bit to 1. If the voltage of AVCC0 falls below the set voltage, the LVDET1 bit becomes 0 and LVDET1 stops operating. Detection of AVCC0 has non-responsive periods of 20 µs.

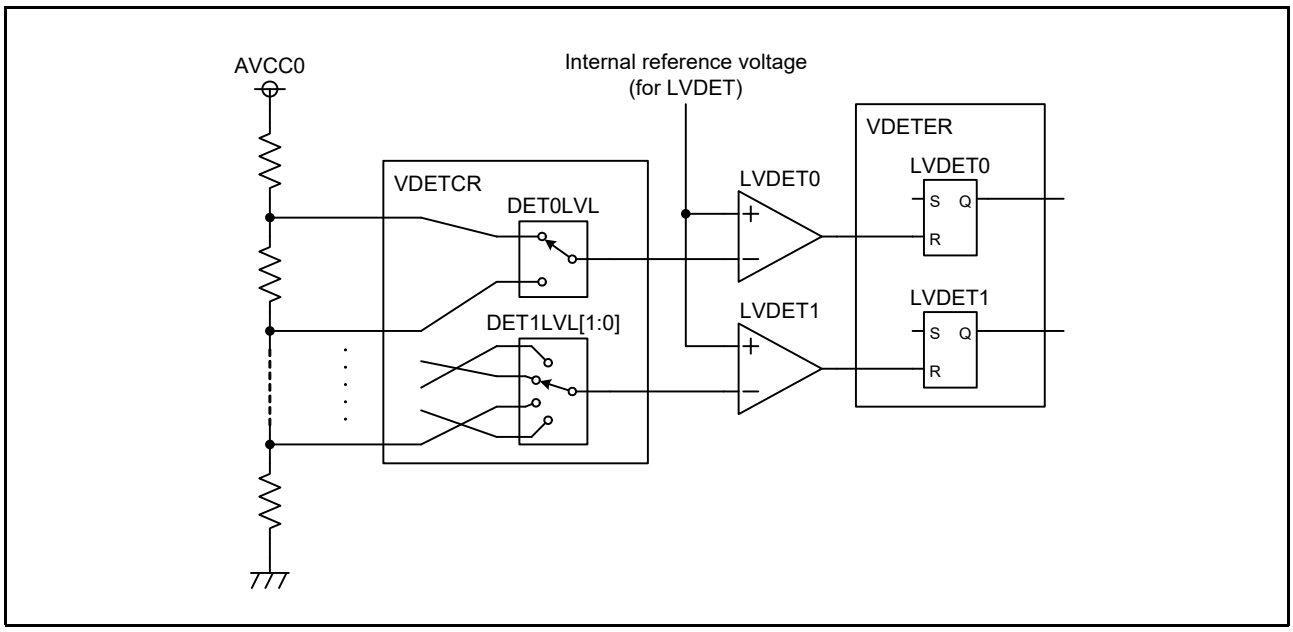

Figure 33.9 Block Diagram of the LVDET

33.3.6.2 DSAD Input Voltage Fault Detector (DSIDET)

The DSAD input voltage fault detector (DSIDET) detects the out-of-range conditions on input signals to the 24-bit delta-sigma A/D converter (DSAD), and one circuit per input pin (DSnPDET for DSnP, and DSnNDET for DSnN; n = 0, 1) is present in each unit.

The input voltage range for the DSADs is between AVSS0 – 0.05 V and AVCC0 + 0.05 V. In order to detect input voltages beyond the above range, the detection levels are set to AVSS0 – 0.2 V (typ.) and AVCC0 + 0.2 V (typ.).

Setting the DSnPDET or DSnNDET bit in the VDETER register to 1 starts the corresponding detector. If an out-of-range condition is detected, the DSnPDET or DSnNDET bit becomes 0 and the detector stops operating. The detection of out-of-range condition has non-responsive periods of 20 µs.

If the PGA is bypassed and the analog input buffer (BUF) is enabled by the settings for the given DSAD, the input voltage range will be between AVSS0 + 0.1 V and AVCC0 – 0.1 V and this circuit cannot detect out-of-range input.

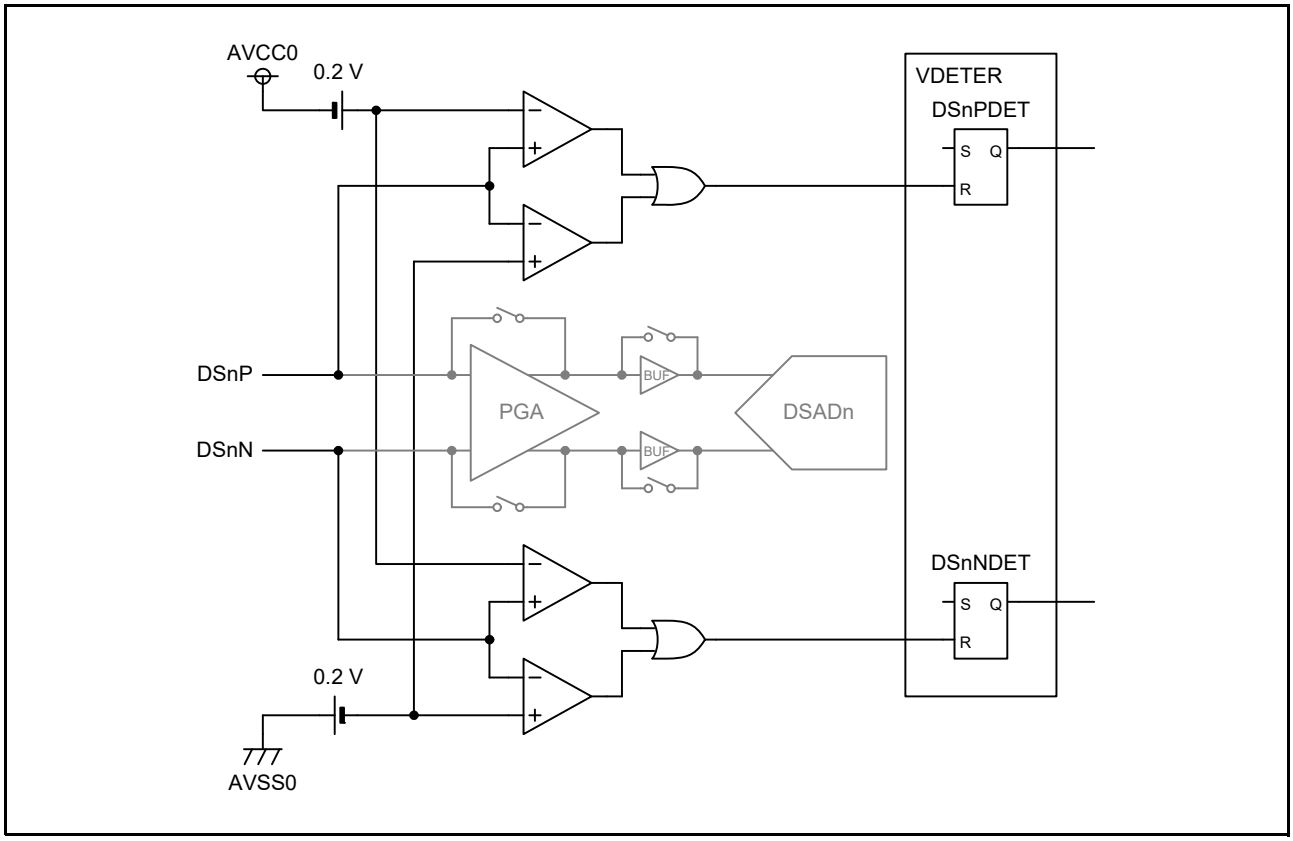

Figure 33.10 Block Diagram of the DSIDET

33.3.6.3 DSAD Reference Voltage Fault Detector (DSRDET)

The DSAD reference voltage fault detector detects out-of-range conditions on the reference voltages provided to the 24-bit delta-sigma A/D converters (DSADs) and assists in detecting disconnection between the external voltage references and the MCU. One circuit (DSnRDET) is provided per DSAD unit (DSADn; n = 0, 1).

If the difference between the positive (VRnP) and negative (VRnN) reference voltages is less than 0.85 V (typ.) or the reference voltage is more than AVCC0 – 0.4 V (typ.) or less than AVSS0 + 0.4 V (typ.), the voltage is judged to be out-of-range.

When this function is to be used, set the DSnmISR.RSEL[3:0] bits to 1011b or 1111b.

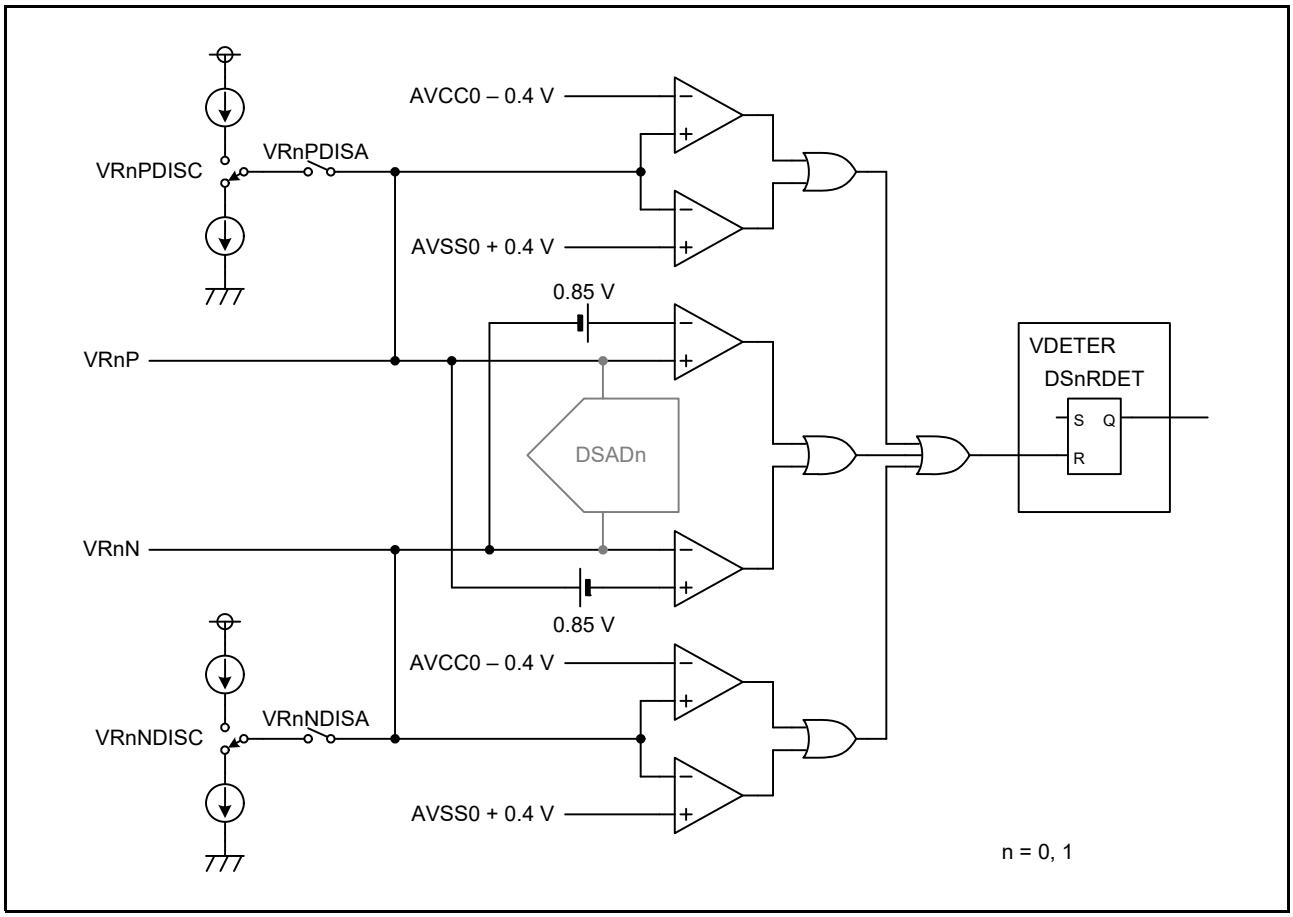

Figure 33.11 Block Diagram of the DSRDET

How to use the disconnect detection assist function is described below.

(1) Set the OPCR.DSADnEN bit to 1 to enable the DSnRDET circuit.
(2) Set the DSADn.ADST.START bit to 1 to provide the reference voltages to VRnP and VRnN.
(3) Select either discharge or charge in the VRnPDISC or VRnNDISC bit in the VDETCR register, and set the VRnPDISA or VRnNDISA bit to 1.
(4) Set the VDETER.DSnRDET bit to 1 to enable the reference voltage fault detector.

When a reference voltage falls below AVSS0 + 0.4 V (typ.) due to discharging, the given DSnRDET bit becomes 0. When a reference voltage rises above AVCC0 – 0.4 V (typ.) due to charging, the given DSnRDET bit becomes 0. The voltage detection has non-responsive periods of 20 µs.

Decide whether to select discharge or charge in consideration of the value of the reference voltage. The wrong selection may lead to incorrect detection.

If the reference buffer is disabled by the setting of the DSnmISR.RSEL[3:0] bits, the disconnect detection assist function will take excessive time due to insufficient charging current, and this may lead to incorrect operation.

33.3.6.4 Excitation Current Source Disconnect Detector (IEXCDET)

The excitation current source disconnect detector (IEXCDET) assists in the detection of disconnection between the excitation current sources (IEXC) and sensors external to the MCU, and one circuit (IEXCkDET) is provided per channel (IEXCk) of the IEXC (k = 0 to 3).

Setting the VDETER.IEXCkDET bit to 1 starts the disconnect detection assist circuit.

If the voltage on a pin selected for the output of IEXCk exceeds AVCC0 – 0.06 V (typ.), the IEXCkDET bit becomes 0 and the disconnect detection assist circuit stops. The voltage detection has non-responsive periods of 20 µs.

Do not set the IEXCkDET bit to 1 if the EXCOSR.IEXCkSEL[3:0] bits is 1111b (output disabled) since the disconnect detection assist function will not work.

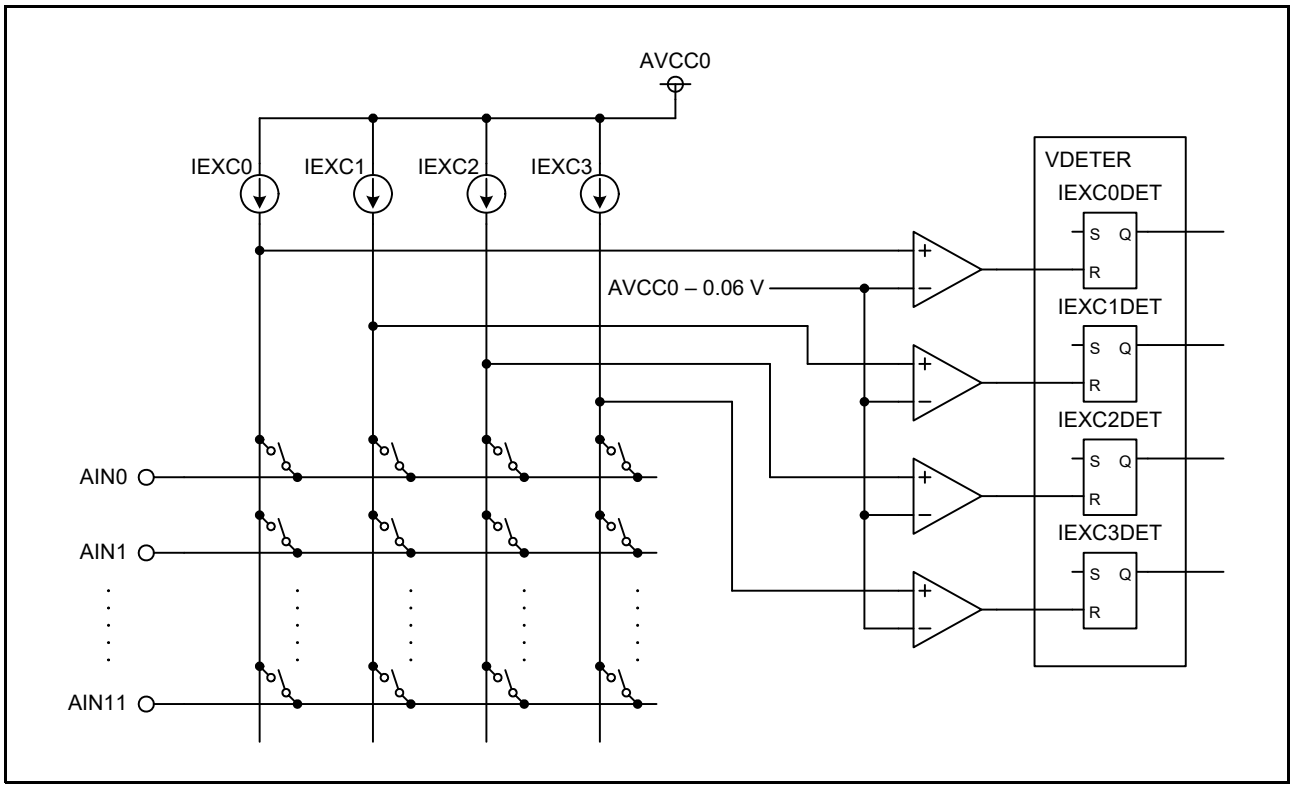

Figure 33.12 Block Diagram of the IEXCDET

33.3.7 Initializing the AFE

Before using a 24-bit delta-sigma A/D converter (DSAD), initialize the AFE according to the procedure shown in Figure 33.13.

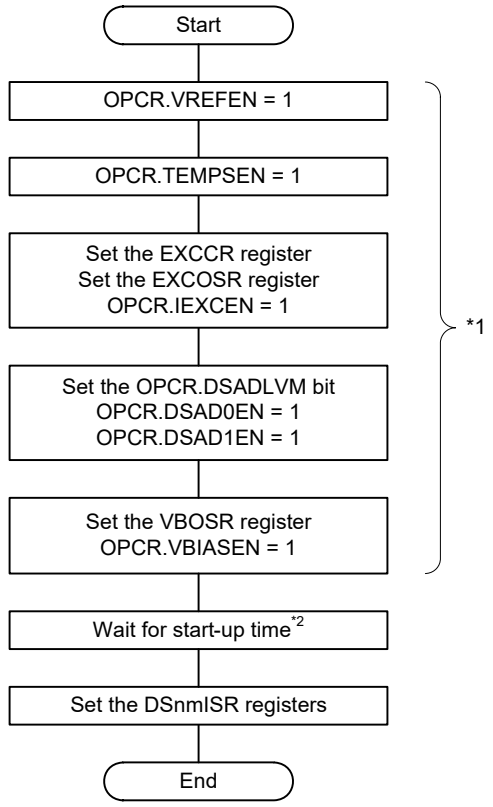

Note 1. These settings can be made in any order. All required bits of the OPCR register can be set simultaneously as the final step. Setting or enabling functions that are not to be used is unnecessary.

Note 2. Wait until all functions which have been enabled are activated.

Figure 33.13 Flow of AFE Initialization

33.3.8 Activating VDET

To use the VDET functions, activate it according to the procedure shown in Figure 33.13.

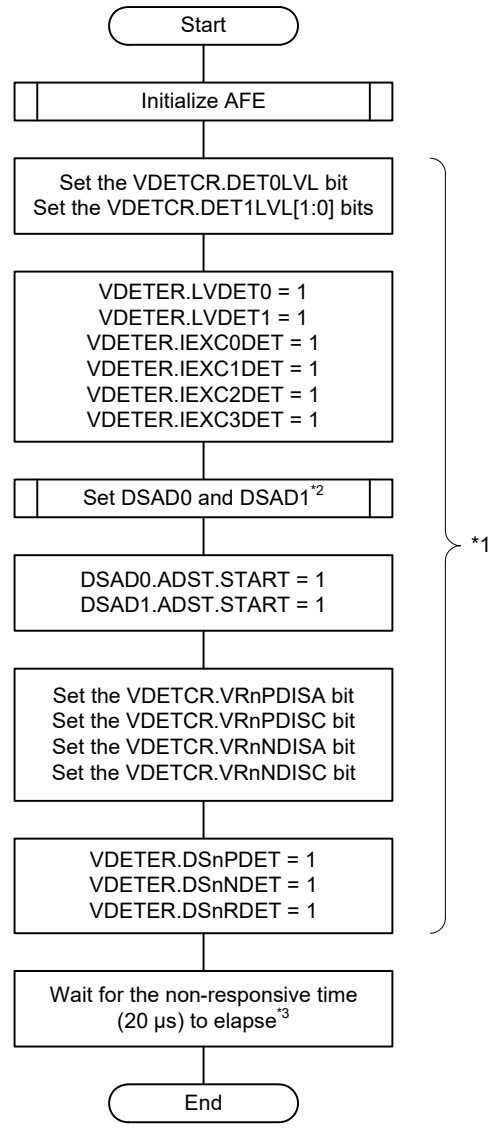

Note 1. Setting or enabling functions that are not to be used is unnecessary.
Note 2. Refer to section 34, 24-bit Delta-Sigma A/D Converters (DSADA).
Note 3. This step of waiting before confirmation of the result is not necessary if an interval of 20 μs or more has already elapsed.

Figure 33.14 Flow of VDET Activation

33.4 Notes

33.4.1 Setting the Module Stop Function

Operation of the AFE can be enabled or disabled by setting a bit in the module stop control register A (MSTPCRA). The AFE is initially disabled after a reset. Registers in the AFE only become accessible after it has been released from the module stop state. For details, refer to section 11, Low Power Consumption.
When the AFE is placed in the module stop state while some or all of its functions are operating, the analog circuits do not stop operating, so the analog power supply current is not reduced. If placing the AFE in the module stop state is intended to reduce the analog power supply current, disable the operation of each of its functions by setting the OPCR register.

33.4.2 Notes on Setting the Analog Input Pins

Proceeding with A/D conversion with the same analog input pin set as a target for conversion by both a 24-bit delta-sigma A/D converter (DSAD0 or DSAD1) and the 12-bit A/D converter (S12AD) is not recommended. Doing so may affect the accuracy of A/D converter.

33.4.3 Notes on Using the VBIAS

V_{BIAS} can be output from the AIN0 to AIN11 pins according to the setting of the VBOSR register. When using it in circuits outside the MCU, connect it to a high-impedance circuit. The voltage gradient generated by the resistance of the internal wiring increases with the current and the effect on the accuracy of the output voltage becomes non-negligible.

33.4.4 Notes on Using the IEXC

In the case of A/D converting the voltage on a pin set as the output of an excitation current source (IEXC), the combination of the internal wiring resistance and excitation current may cause a voltage gradient and the desired precision of A/D conversion may not obtained.
When setting the EXCOSR.IEXCkSEL[3:0] bits, do not set them to select a pin that is already in use for another channel (k = 0 to 3). Doing so may make the desired precision of current impossible to obtain.

33.4.5 Notes on Setting the Analog Power Supply Pins

The recommended range of operating voltage for AVCC0 is 2.7 to 5.5 V. Note that only the 12-bit A/D converter (S12AD) is capable of operating within the range from 1.8 to 5.5 V. If a voltage within the range from 1.8 to 2.7 V is being provided to AVCC0, set the OPCR register to 00h because the AFE and DSADs will not be capable of operating.
Place the AVSS0 and VREFL0 pins at the same voltage as the VSS pin.
Figure 33.15 shows an example of the connection of power-supply pins and reference voltage input pins. Connect 0.1-µF capacitors between VCC and VSS, between AVCC0 and AVSS0, and between VREFH0 and VREFL0 such that the shortest possible closed loops are formed. Also, connect the REFOUT pin to AVSS0 via a 0.47-µF capacitor when using the internal reference voltage (VREF).

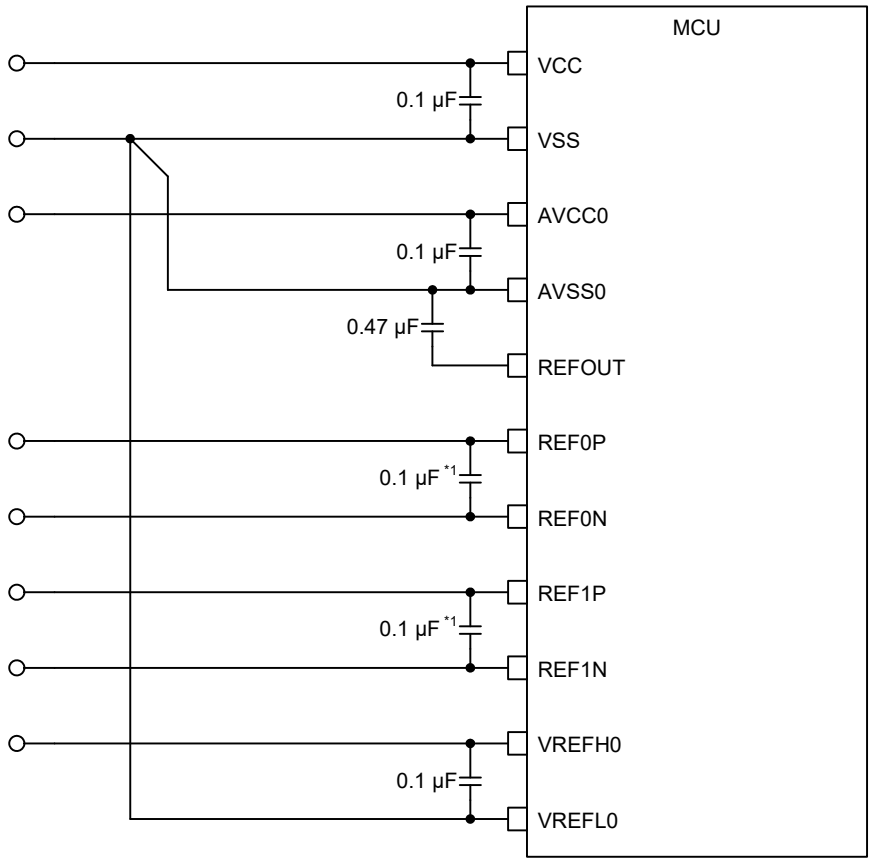

Note 1. The values are for reference. Determine the values based on the characteristics of the power-supply circuit.

Figure 33.15 Example of Connection of the Power Supply Pins and Reference Voltage Pins

33.4.6 Handling of Unused Pins

If the AFE is not used or some pins are unused, handle them as listed in Table 33.8.

Table 33.8 Handling of unused pins

Pin Name	Description of handling
AVCC0	Connect either to VCC or VSS
AVSS0	Connect to VSS
REFOUT	Leave the pin open
REF0P	Connect to AVCC0 directly or via a pull-up resistor
REF0N	Connect to AVSS0 directly or via a pull-down resistor
AIN0 to AIN11	Connect to AVSS0 directly or via a pull-down resistor
LSW	Connect to AVSS0 directly or via a pull-down resistor

34. 24-bit Delta-Sigma A/D Converters (DSADA)

34.1 Overview

This MCU has two 24-bit delta-sigma A/D converters (DSAD0 and DSAD1), and a programmable gain instrumentation amplifier is included for each of them.

Table 34.1 lists the specifications of the DSAD, and Figure 34.1 is a block diagram of the DSAD.

Table 34.1 DSAD Specifications (1/2)

Item	Description
Number of units	2
Input channels	6 each (12 inputs)
Type of A/D conversion	Delta-sigma
Resolution	24 bits
Analog input types	The configuration of input is selectable per channel by using the analog multiplexer (AMUX). • Differential input • Pseudo-differential input • Single-ended input
Modulator clock frequency (fMOD)	• Normal mode: 500 kHz • Low power mode: 125 kHz
Programmable gain instrumentation amplifier (PGA)	• Gain of the PGA is selectable per channel (×1, ×2, ×4, ×8, ×16, ×32, ×64, ×128). • The PGA can be bypassed for direct input to the DSAD. • The PGA can be bypassed with input to the DSAD via the analog input buffer (BUF).
Data register	One data register for A/D conversion results, and one data register for averaging results • The channel number corresponding to the A/D conversion result can be confirmed in the data register. • Overflow flags for the A/D conversion results are included. • The format for coding of the output is selectable as two's complement or straight binary.
Operating clock	• Normal mode: 4 MHz • Low power mode: 1 MHz The operating clock is generated by dividing PCLKB by 1, 2, 3, 4, 5, 6, 7.5, or 8.
Conditions for starting A/D conversion	• Software trigger • Hardware trigger
Inter-unit synchronized start	The start of conversion by units 0 and 1 can be synchronized.
Operating modes	• Continuous scan (the scan continues until auto scan is stopped) • Single scan (the scan stops after one cycle of auto scan is completed) • One-shot (the scan stops after A/D conversion is completed)
Conversion modes	• Normal operation • Single-cycle settling
Oversampling ratio (OSR)	• Selectable from among 64, 128, 256, 512, 1024, 2048, and user-defined values • User-defined values: 32 to 65536 (only multiples of 16) • Settable per channel
Number of times for A/D conversion	The number of times for A/D conversion for one cycle of auto scan is settable per channel. • The number of times can be set as from 1 to 8032 or 1 to 255 depending on the setting of the relevant register. • One-shot operation proceeds when the setting for the number of times is 0.
A/D conversion averaging	• Details of the averaging operation are selectable. - Averaging is not performed. - Averaging is performed, and a A/D conversion end interrupt is generated at every A/D conversion. - Averaging is performed, and a A/D conversion end interrupt is generated when the averaged value is stored. • The number of data to be averaged is selectable per channel (8, 16, 32, or 64).
Interrupt sources	• A/D conversion end interrupt (ADI0, ADI1) • Scan end interrupt (SCANEND0, SCANEND1)
Scan operation	Only channels for which A/D conversion is enabled are to be converted from the side of channel 0.
Digital filter	Fourth-order sinc filter

Table 34.1 DSAD Specifications (2/2)

Item	Description
Calibrations for offset errors and gain errors	Offset errors and gain errors are automatically calibrated by using values set in registers.
Disconnect detection assist	Disconnect detection assist of the input signals is available. • Disconnect detection current is settable per channel (as 0.5 μA, 2 μA, 4 μA, or 20 μA).
Abnormality detection	If an error occurs in a result of A/D conversion, a notification of the error is provided with the results of A/D conversion.
Event link function	A/D conversion is started by the ELC trigger (hardware trigger).
Low power consumption function	Each unit can be placed in the module stop state.

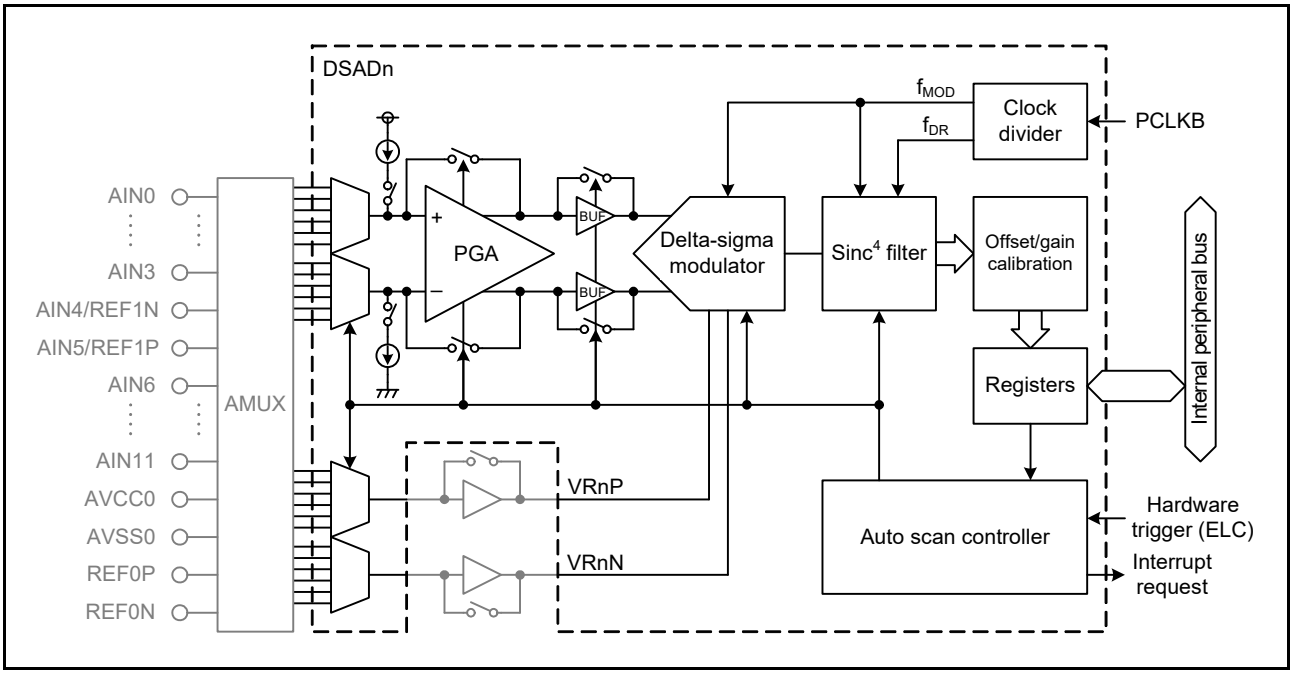

Figure 34.1 DSAD Block Diagram

Tables 34.2, 34.3, and 34.4 list the I/O pins of the DSAD, internal signals between the AFE and the DSAD, and internal signals in the DSAD, respectively.

Table 34.2 DSAD I/O Pins

Pin Name	I/O	Function
AVCC0	Input	Analog power supply
AVSS0	Input	Analog ground

Table 34.3 Internal Signals Between AFE and DSAD (n = 0, 1; m = 0 to 5)

Signal Name	Function
VRnmP	Positive reference voltage for DSADn channel m
VRnmN	Negative reference voltage for DSADn channel m
ANDSnmP	Positive input signal for DSADn channel m
ANDSnmN	Negative input signal for DSADn channel m

Table 34.4 DSAD Internal Signals (n = 0, 1; m = 0 to 5)

Signal Name	Function
VRnP	Positive reference voltage for DSADn selected from among VRnmP
VRnN	Negative reference voltage for DSADn selected from among VRnmN
DSnP	Positive input signal for DSADn selected from among ANDSnmP
DSnN	Negative input signal for DSADn selected from among ANDSnmN

34.2 Register Descriptions

34.2.1 DSAD Operating Clock Control Register (CCR)

Addresses DSAD0.CCR 000A 1000h, DSAD1.CCR 000A 1200h

	b31	b30	b29	b28	b27	b26	b25	b24	b23	b22	b21	b20	b19	b18	b17	b16
	—	—	—	—	—	—	—	—	—	—	—	—	—	—	—	—
Value after reset	0	0	0	0	0	0	0	0	0	0	0	0	0	0	0	0

	b15	b14	b13	b12	b11	b10	b9	b8	b7	b6	b5	b4	b3	b2	b1	b0
	—	—	—	—	—	—	—	—	LPMD	—	—	—	CLKDIV[3:0]			
Value after reset	0	0	0	0	0	0	0	0	0	0	0	0	0	1	1	1

Bit	Symbol	Bit Name	Description	R/W
b3 to b0	CLKDIV[3:0]	Operating Clock Division Ratio Setting	b3 b0 0 0 0 0: PCLKB (no division) 0 0 0 1: PCLKB/2 (division by 2) 0 0 1 0: PCLKB/3 (division by 3) 0 0 1 1: PCLKB/4 (division by 4) 0 1 0 0: PCLKB/5 (division by 5) 0 1 0 1: PCLKB/6 (division by 6) 0 1 1 0: PCLKB/7.5 (division by 7.5) 0 1 1 1: PCLKB/8 (division by 8) 1 1 0 0: PCLKB (no division)*1 1 1 0 1: PCLKB/2 (division by 2)*1 Settings other than above are prohibited.	R/W
b6 to b4	—	Reserved	These bits are read as 0. The write value should be 0.	R
b7	LPMD	Low Power Mode Setting	0: Normal mode 1: Low power mode (the frequency of the operating clock becomes one quarter of that in the normal mode)	R/W
b31 to b8	—	Reserved	These bits are read as 0. The write value should be 0.	R

Note: Do not rewrite this register while the SR.ACT flag is 1 (auto scan is in progress).
Note: Do not consecutively write new values to this register. When separately setting new values of the LPMD bit and CLKDIV[3:0] bits, do not set this register again until at least one cycle of the operating clock has elapsed after the first setting of this register.
Note 1. When this setting is selected, the frequency of the operating clock does not become one quarter of that in the normal mode even if the LPMD bit is 1 (low power mode). This setting is used when the PCLKB frequency is 1 or 2 MHz and the DSADs are operating in low power mode.

The CCR register is used for setting the operating clock division ratio and enabling low power mode.

CLKDIV[3:0] Bits (Operating Clock Division Ratio Setting)

The CLKDIV[3:0] bits select the division ratio to generate the operating clock at 4 MHz from the PCLKB.
The division ratio is selectable from among no division, division by 2, division by 3, division by 4, division by 5, division by 6, division by 7.5, and division by 8. Set this bit and the frequency of the PCLKB so that the operating clock becomes 4 MHz if the LPMD bit is 0 or 1 MHz if the LPMD bit is 1.

LPMD Bit (Low Power Mode Setting)

The LPMD bit selects the operating mode for the DSAD. The operating mode is selectable as normal mode or low power mode.
If the value of this bit is changed, the gain and offset calibration coefficients must also be updated. For details of the gain and offset calibration coefficients, refer to section 34.2.11, Channel m Gain Calibration Registers (GCRm) (m = 0 to 5) and section 34.2.12, Channel m Offset Calibration Register (OFCRm) (m = 0 to 5).

34.2.2 DSAD Operating Mode Register (MR)

Addresses DSAD0.MR 000A 1008h, DSAD1.MR 000A 1208h

	b31	b30	b29	b28	b27	b26	b25	b24	b23	b22	b21	b20	b19	b18	b17	b16
	—	—	—	—	—	—	—	—	—	—	—	—	—	—	—	—
Value after reset	0	0	0	0	0	0	0	0	0	0	0	0	0	0	0	0

	b15	b14	b13	b12	b11	b10	b9	b8	b7	b6	b5	b4	b3	b2	b1	b0
	—	—	CH5EN	CH4EN	CH3EN	CH2EN	CH1EN	CH0EN	—	—	—	TRGMD	—	SYNCST	—	SCMD
Value after reset	0	0	0	0	0	0	0	0	0	0	0	0	0	0	0	0

Bit	Symbol	Bit Name	Description	R/W
b0	SCMD	Scan Mode Select	0: Continuous scan mode 1: Single scan mode	R/W
b1	—	Reserved	This bit is read as 0. The write value should be 0.	R
b2	SYNCST	Inter-Unit Synchronized Start Enable	0: Disable inter-unit synchronized start. 1: Enable inter-unit synchronized start.	R/W
b3	—	Reserved	This bit is read as 0. The write value should be 0.	R
b4	TRGMD	Trigger Mode Select	0: Software trigger (conversion is started by writing to the ADST register). 1: Hardware trigger (conversion is started by a hardware trigger from the ELC).	R/W
b7 to b5	—	Reserved	These bits are read as 0. The write value should be 0.	R
b8	CH0EN	Channel 0 A/D Conversion Enable	0: A/D conversion enabled. 1: A/D conversion disabled.	R/W
b9	CH1EN	Channel 1 A/D Conversion Enable	0: A/D conversion enabled. 1: A/D conversion disabled.	R/W
b10	CH2EN	Channel 2 A/D Conversion Enable	0: A/D conversion enabled. 1: A/D conversion disabled.	R/W
b11	CH3EN	Channel 3 A/D Conversion Enable	0: A/D conversion enabled. 1: A/D conversion disabled.	R/W
b12	CH4EN	Channel 4 A/D Conversion Enable	0: A/D conversion enabled. 1: A/D conversion disabled.	R/W
b13	CH5EN	Channel 5 A/D Conversion Enable	0: A/D conversion enabled. 1: A/D conversion disabled.	R/W
b31 to b14	—	Reserved	These bits are read as 0. The write value should be 0.	R

Note: Do not change settings other than those of the SYNCST and TRGMD bits while the SR.ACT flag is 1 (auto scan is in progress).

The MR register is used for settings common to all channels in each unit.

SCMD Bit (Scan Mode Select)

The SCMD bit selects the scan mode.

Either the continuous scan mode or single scan mode is selectable.

When the TRGMD bit is 1 (hardware trigger), the single scan mode is selected regardless of the setting of this bit.

When the setting of the CRm.CNX[2:0] bits (m = 0 to 5) is 000b and that of the CRm.CNY[4:0] bits is 00000b, completion of A/D conversion on the corresponding channel stops the scan (one-shot operation).

SYNCST Bit (Inter-Unit Synchronized Start Enable)

The SYNCST bit enables synchronized start of conversion between units. This bit is also used to make the operating clocks of DSAD0 and DSAD1 in phase.
Setting this bit to 1 on both DSAD0 and DSAD1 causes the operating clocks of the units to be in phase, allowing common use of the start trigger between units, and synchronizing the timing for starting sampling for the A/D conversion.
When using the inter-unit synchronized start function, also make sure that the CCR.LPMD bits in both DSAD0 and DSAD1 have the same value.
When not using the inter-unit synchronized start function, set this bit to 1 on both units, wait at least three cycles of the operating clock plus 4 µs, and then set this bit to 0 on both units.

TRGMD Bit (Trigger Mode Select)

The TRGMD bit selects the trigger for the start of A/D conversion.
This is selectable as the software trigger or hardware trigger.
When the hardware trigger is selected, single scan mode is selected regardless of the setting of the SCMD bit.

CHmEN Bit (Channel m A/D Conversion Enable) (m = 0 to 5)

The CHmEN bit controls enabling of A/D conversion of the signals on the corresponding channels.

34.2.3 Channel m Operating Mode Register (MRm) (m = 0 to 5)

Addresses DSAD0.MR0 000A 1020h, DSAD0.MR1 000A 1024h, DSAD0.MR2 000A 1028h,
DSAD0.MR3 000A 102Ch, DSAD0.MR4 000A 1030h, DSAD0.MR5 000A 1034h,
DSAD1.MR0 000A 1220h, DSAD1.MR1 000A 1224h, DSAD1.MR2 000A 1228h,
DSAD1.MR3 000A 122Ch, DSAD1.MR4 000A 1230h, DSAD1.MR5 000A 1234h

	b31	b30	b29	b28	b27	b26	b25	b24	b23	b22	b21	b20	b19	b18	b17	b16
	—	—	DISC[1:0]		—	—	—	—	—	—	—	—	AVDN[1:0]		AVMD[1:0]	
Value after reset	0	0	0	0	0	0	0	0	0	0	0	0	0	0	0	0

	b15	b14	b13	b12	b11	b10	b9	b8	b7	b6	b5	b4	b3	b2	b1	b0
	—	—	DISAN	DISAP	—	—	—	—	—	OSR[2:0]			—	SDF	CVMD	—
Value after reset	0	0	0	0	0	0	0	0	0	0	1	0	0	0	0	0

Bit	Symbol	Bit Name	Description	R/W
b0	—	Reserved	This bit is read as 0. The write value should be 0.	R
b1	CVMD	A/D Conversion Mode Select	0: Normal operation 1: Single cycle settling	R/W
b2	SDF	Stored Data Format Select	0: Two's complement 1: Straight binary	R/W
b3	—	Reserved	This bit is read as 0. The write value should be 0.	R
b6 to b4	OSR[2:0]	Oversampling Ratio Select	b6 b4 0 0 0: 64 0 0 1: 128 0 1 0: 256 0 1 1: 512 1 0 0: 1024 1 0 1: 2048 1 1 0: Do not set this value. 1 1 1: The setting of the OSRm register is used.	R/W
b11 to b7	—	Reserved	These bits are read as 0. The write value should be 0.	R
b12	DISAP	Positive Input Signal Disconnect Detection Assist	0: Disconnect detection assist is disabled. 1: Disconnect detection assist is enabled.	R/W
b13	DISAN	Negative Input Signal Disconnect Detection Assist	0: Disconnect detection assist is disabled. 1: Disconnect detection assist is enabled.	R/W
b15, b14	—	Reserved	These bits are read as 0. The write value should be 0.	R
b17, b16	AVMD[1:0]	Averaging Mode Select	b17 b16 0 0: Results are not averaged. 0 1: Results are not averaged. 1 0: Results are averaged. The A/D conversion end interrupt is generated each time A/D conversion is completed. 1 1: Results are averaged. The A/D conversion end interrupt is generated when the averaged value is stored.	R/W
b19, b18	AVDN[1:0]	Averaging Data Number Select	b19 b18 0 0: 8 0 1: 16 1 0: 32 1 1: 64	R/W
b27 to b20	—	Reserved	These bits are read as 0. The write value should be 0.	R
b29, b28	DISC[1:0]	Disconnect Detection Assist Current Select	b29 b28 0 0: 0.5 μA 0 1: 2 μA 1 0: 4 μA 1 1: 20 μA	R/W
b31, b30	—	Reserved	These bits are read as 0. The write value should be 0.	R

Note: Do not rewrite this register while the SR.ACT flag is 1 (auto scan is in progress).

The MRm register specifies the operating mode per channel.

CVMD Bit (A/D Conversion Mode Select)

The CVMD bit selects the A/D conversion mode. For details, refer to section 34.3.8, A/D Conversion Modes.

SDF Bit (Stored Data Format Select)

The SDF bit selects the data format of the A/D conversion result for storage in the DR register as either two's complement or straight binary.

OSR[2:0] Bits (Oversampling Ratio Select)

The OSR[2:0] bits specify the ratio of the data rate (frequency of updating of the A/D conversion results) to the modulator clock frequency (oversampling ratio).

DISAP Bit (Positive Input Signal Disconnect Detection Assist)

The DISAP bit is used to select disconnect detection assist of the pin connected to the positive input of the DSAD. Setting this bit to 1 selects charge of the positive input for the given channel.

DISAN Bit (Negative Input Signal Disconnect Detection Assist)

The DISAN bit is used to select disconnect detection assist of the pin connected to the negative input of the DSAD. Setting this bit to 1 selects discharge of the negative input for the given channel.

AVMD[1:0] Bits (Averaging Mode Select)

The AVMD[1:0] bits specify the averaging mode for the results of A/D conversion.
When averaging is selected, these bits select whether to generate an interrupt at every A/D conversion or when the averaged value is stored.

AVDN[1:0] Bits (Averaging Data Number Select)

The AVDN[1:0] bits specify the number of data to be averaged. These bits can be set to 8, 16, 32, or 64.
When averaging them, the total number of A/D conversions controlled by the setting of the CRm register is multiplied by 8, 16, 32 or 64.

DISC[1:0] Bits (Disconnect Detection Assist Current Select)

The DISC[1:0] bits specify the value of the current to be used in disconnect detection assist.

34.2.4 Channel m Control Register (CRm) (m = 0 to 5)

Addresses DSAD0.CR0 000A 1040h, DSAD0.CR1 000A 1044h, DSAD0.CR2 000A 1048h, DSAD0.CR3 000A 104Ch, DSAD0.CR4 000A 1050h, DSAD0.CR5 000A 1054h, DSAD1.CR0 000A 1240h, DSAD1.CR1 000A 1244h, DSAD1.CR2 000A 1248h, DSAD1.CR3 000A 124Ch, DSAD1.CR4 000A 1250h, DSAD1.CR5 000A 1254h

	b31	b30	b29	b28	b27	b26	b25	b24	b23	b22	b21	b20	b19	b18	b17	b16
	—	—	—	—	—	—	—	—	—	—	—	GAIN[4:0]				
Value after reset	0	0	0	0	0	0	0	0	0	0	0	0	0	0	0	0

	b15	b14	b13	b12	b11	b10	b9	b8	b7	b6	b5	b4	b3	b2	b1	b0
	—	—	—	—	CNMD	—	—	—	CNX[2:0]			CNY[4:0]				
Value after reset	0	0	0	0	0	0	0	0	0	0	0	0	0	0	0	1

Bit	Symbol	Bit Name	Description	R/W
b4 to b0	CNY[4:0]	A/D Conversion Number Setting Y	These bits specify the value of y in the equation for the number of times A/D conversion is to proceed. Setting range: y = 0 (00000b) to 31 (11111b)	R/W
b7 to b5	CNX[2:0]	A/D Conversion Number Setting X	These bits specify the value of x in the equation for the number of times A/D conversion is to proceed. Setting range: x = 0 (000b) to 7 (111b)	R/W
b10 to b8	—	Reserved	These bits are read as 0. The write value should be 0.	R
b11	CNMD	A/D Conversion Number Calculation Mode Select	0: Exponential operating mode (the number of A/D conversions is from 1 to 8032) 1: Immediate value mode (the number of A/D conversions is from 1 to 255)	R/W
b15 to b12	—	Reserved	These bits are read as 0. The write value should be 0.	R
b20 to b16	GAIN[4:0]	PGA Gain Select	These bits specify the PGA gains and enabling or disabling of the PGA and of the analog input buffers (BUFs). For details of selection by the settings, refer to Table 34.5.	R/W
b31 to b21	—	Reserved	These bits are read as 0. The write value should be 0.	R

Note: Do not rewrite this register while the SR.ACT flag is 1 (auto scan is in progress).

The CRm register specifies the PGA gain and the number of rounds of A/D conversion.

CNY[4:0] Bits (A/D Conversion Number Setting Y)

The CNY[4:0] bits specify the value of variable y that determines the number of A/D conversions N in one auto scan cycle.

If both the CNX[2:0] and CNY[4:0] bits are 0, the operating mode becomes one-shot.

CNX[2:0] Bits (A/D Conversion Number Setting X)

The CNX[2:0] bits specify the value of variable x that determines the number of A/D conversions N in one auto scan cycle.

The equation for the number N of A/D conversions is determined as follows.

- When the CRm.CNMD bit is 1 (immediate value mode),

  $N = x \times 32 + y$

- When the CRm.CNMD bit is 0 (exponential operation mode),

  $N = (y + 32) \times 2^x - 32$

Numbers of A/D conversions on 256 levels within a setting range of 0 to 8032 (when N is 0, the operating mode becomes one-shot) in combination with x and y are selectable.

Figure 34.2 is a diagram of the correlation between the level in the exponential operation mode (the values of the lower 8 bits of the register) and the number of A/D conversions.

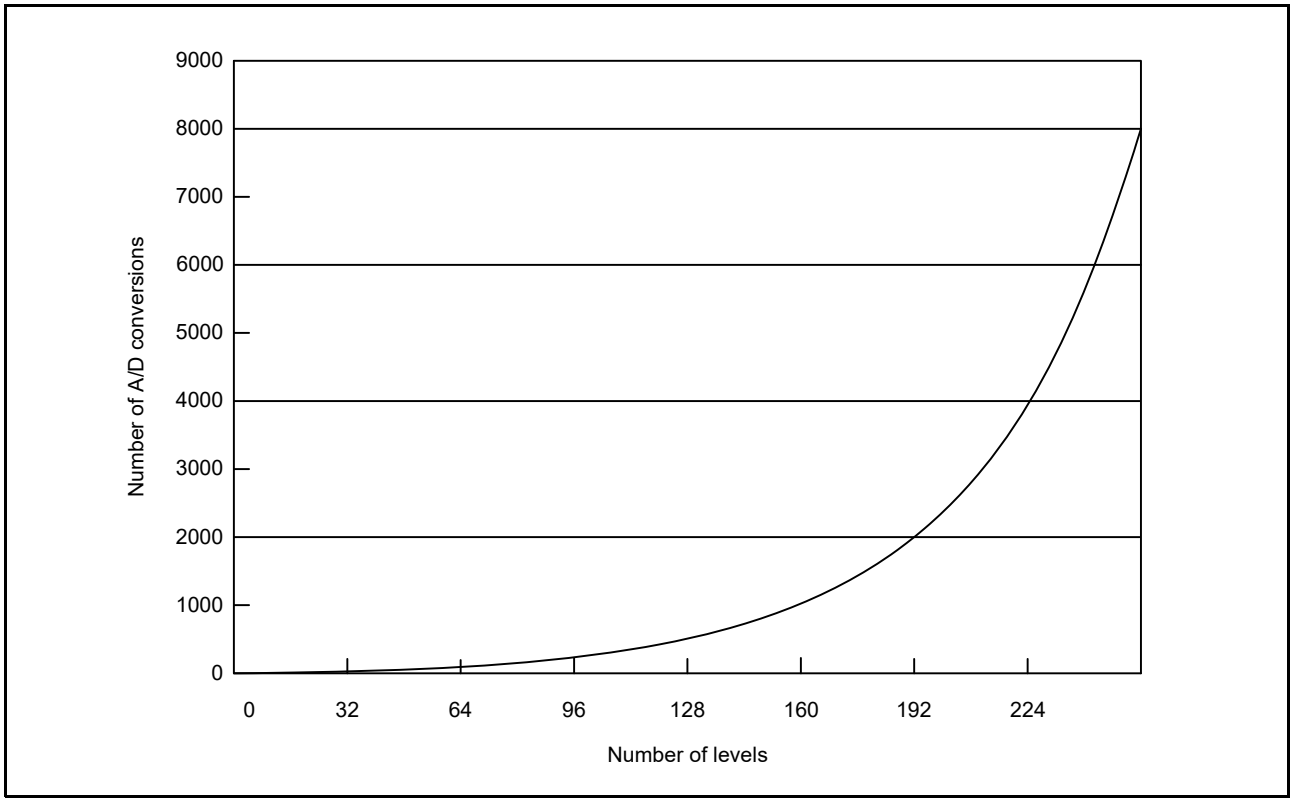

Figure 34.2 Diagram of the Correlation between the Number of Levels in the Exponential Operation Mode and the Number of A/D Conversions

CNMD Bit (A/D Conversion Number Calculation Mode Select)

The CNMD bit specifies the calculation mode for the number of A/D conversions in one auto scan cycle.

GAIN[4:0] Bits (PGA Gain Select)

The GAIN[4:0] bits select the gain of the programmable gain instrumentation amplifier (PGA), and enable or disable the PGA and analog input buffer (BUF).

Table 34.5 Relation Between the Settings of the GAIN[4:0] Bits and PGA Gains, Enabling/Disabling of the PGA and BUF

GAIN[4:0]	Gain	PGA	Positive Side BUF	Negative Side BUF
00000b	1	Disabled (bypassed)	Disabled (bypassed)	Disabled (bypassed)
00001b	1		Enabled	
00010b	1		Disabled (bypassed)	Enabled
00011b	1		Enabled	
10000b	1	Enabled	Enabled	Enabled
10001b	2			
10010b	4			
10011b	8			
10100b	16			
10101b	32			
10110b	64			
10111b	128			
Settings other than above are prohibited.				

34.2.5 A/D Conversion Start Register (ADST)

Addresses DSAD0.ADST 000A 1060h, DSAD1.ADST 000A 1260h

	b31	b30	b29	b28	b27	b26	b25	b24	b23	b22	b21	b20	b19	b18	b17	b16
	—	—	—	—	—	—	—	—	—	—	—	—	—	—	—	—
Value after reset	0	0	0	0	0	0	0	0	0	0	0	0	0	0	0	0

	b15	b14	b13	b12	b11	b10	b9	b8	b7	b6	b5	b4	b3	b2	b1	b0
	—	—	—	—	—	—	—	—	—	—	—	—	—	—	—	START
Value after reset	0	0	0	0	0	0	0	0	0	0	0	0	0	0	0	0

Bit	Symbol	Bit Name	Description	R/W
b0	START	Auto Scan Start	0: Stop auto scan 1: Start auto scan	R/W
b31 to b1	—	Reserved	These bits are read as 0. The write value should be 0.	R

The ADST register starts or stops A/D conversion (auto scan).

START Bit (Auto Scan Start)

The START bit starts or stops the A/D conversion (auto scan).
This bit is only effective when the MR.TRGMD bit is 0 (software trigger).
Setting this bit to 1 starts auto scan, and changing this bit from 1 to 0 stops auto scan. Do not set this bit to 1 until two cycles of the operating clock have elapsed after setting the bit 0. To use this bit to stop auto scan, do so according to the procedure in section 34.4.5, Stop Auto Scan.
The value of this bit does not become 1 if auto scan is started by a hardware trigger or the inter-unit synchronized start function. Use the SR.ACT flag to check whether auto scan is in progress or not.
This bit also becomes 0 when 1 is written to the ADSTP.STOP bit or auto scan is completed.

34.2.6 A/D Conversion Stop Register (ADSTP)

Addresses DSAD0.ADSTP 000A 1064h, DSAD1.ADSTP 000A 1264h

	b31	b30	b29	b28	b27	b26	b25	b24	b23	b22	b21	b20	b19	b18	b17	b16
	—	—	—	—	—	—	—	—	—	—	—	—	—	—	—	—
Value after reset	0	0	0	0	0	0	0	0	0	0	0	0	0	0	0	0

	b15	b14	b13	b12	b11	b10	b9	b8	b7	b6	b5	b4	b3	b2	b1	b0
	—	—	—	—	—	—	—	—	—	—	—	—	—	—	—	STOP
Value after reset	0	0	0	0	0	0	0	0	0	0	0	0	0	0	0	0

Bit	Symbol	Bit Name	Description	R/W
b0	STOP	Auto Scan Stop	Writing 1 to this bit stops auto scan. This bit is read as 0.	R/W
b31 to b1	—	Reserved	These bits are read as 0. The write value should be 0.	R

The ADSTP register stops A/D conversion (auto scan).

STOP Bit (Auto Scan Stop)

Writing 1 to this bit stops A/D conversion (auto scan). It is effective regardless of setting of the MR.TRGMD bit.
To stop auto scan which was started by the inter-unit synchronized start function, write 1 to the STOP bits in both DSAD0 and DSAD1.
When 1 is written to this bit while the ADST.START bit is 1, the START bit becomes 0.
After 1 has been written to this bit, do not start auto scan until at least two cycles of the operating clock have elapsed. To use this bit to stop auto scan, do so according to the procedure in section 34.4.5, Stop Auto Scan.

34.2.7 Data Register (DR)

Addresses DSAD0.DR 000A 1070h, DSAD1.DR 000A 1270h

	b31	b30	b29	b28	b27	b26	b25	b24	b23	b22	b21	b20	b19	b18	b17	b16
	CCH[2:0]			—	—	—	ERR	OVF	DATA[23:16]							
Value after reset	0	0	0	0	0	0	0	0	0	0	0	0	0	0	0	0

	b15	b14	b13	b12	b11	b10	b9	b8	b7	b6	b5	b4	b3	b2	b1	b0
	DATA[15:0]															
Value after reset	0	0	0	0	0	0	0	0	0	0	0	0	0	0	0	0

Bit	Symbol	Bit Name	Description	R/W
b23 to b0	DATA[23:0]	Data Bits	The results of A/D conversion are stored in these bits.	R
b24	OVF	Overflow flag	0: Normal status (within the range) 1: An overflow occurred.	R
b25	ERR	Error Detected flag	0: Error not detected 1: Error detected	R
b28 to b26	—	Reserved	These bits are read as 0.	R
b31 to b29	CCH[2:0]	Converted Channel Indication	b31 b29 0 0 0: Not converted or data invalid 0 0 1: Channel 0 0 1 0: Channel 1 0 1 1: Channel 2 1 0 0: Channel 3 1 0 1: Channel 4 1 1 0: Channel 5	R

The DR register holds the results of A/D conversion.

DATA[23:0] Bits (Data Bits)

The DATA[23:0] bits hold the values of the results of A/D conversion.
When the MRm.SDF bit (m = 0 to 5) is 0 (two's complement format), the results are given in the range from –8388608 (80 0000h) to +8388607(7F FFFFh). When the MRm.SDF bit is 1 (straight binary format), the results are given in the range from 0 (00 0000h) to 16777215 (FF FFFFh).

OVF Flag (Overflow flag)

The OVF flag indicates whether an overflow has occurred as a result of A/D conversion.
If an overflow has occurred, the result of conversion will be either the maximum or minimum value.

ERR Flag (Error Detected flag)

If an abnormal signal oscillation occurs in the A/D conversion circuit and an error occurs in the A/D conversion result, this flag is set to 1 at the same time as the value is stored in the DATA[23:0] bits. In this case, the value of the DATA[23:0] bits is not guaranteed.
To obtain a normal result of A/D conversion again after this flag has become 1, the auto scan needs to be stopped and restarted. If the result of resumed A/D conversion is normal conversion, the value is stored in the DATA[23:0] bits and this flag becomes 0 at the same time.

CCH[2:0] Bits (Converted Channel Indication)

These bits indicate the channel from which the value of A/D conversion result stored in this register came.

34.2.8 Averaged Value Data Register (AVDR)

Addresses DSAD0.AVDR 000A 1090h, DSAD1.AVDR 000A 1290h

	b31	b30	b29	b28	b27	b26	b25	b24	b23	b22	b21	b20	b19	b18	b17	b16
	CCH[2:0]			—	—	—	ERR	OVF	DATA[23:16]							
Value after reset	0	0	0	0	0	0	0	0	0	0	0	0	0	0	0	0

	b15	b14	b13	b12	b11	b10	b9	b8	b7	b6	b5	b4	b3	b2	b1	b0
	DATA[15:0]															
Value after reset	0	0	0	0	0	0	0	0	0	0	0	0	0	0	0	0

Bit	Symbol	Bit Name	Description	R/W
b23 to b0	DATA[23:0]	Data Bits	The values of averaged results of A/D conversion are stored in these bits. In the case of no averaging, the value is 00 0000h.	R
b24	OVF	Overflow flag	0: Normal state (within the range) 1: An overflow occurred	R
b25	ERR	Error Detected flag	0: Error not detected 1: Error detected	R
b28 to b26	—	Reserved	These bits are read as 0.	R
b31 to b29	CCH[2:0]	Converted Channel Indication	b31 b29 0 0 0: Not converted or data invalid 0 0 1: Channel 0 0 1 0: Channel 1 0 1 1: Channel 2 1 0 0: Channel 3 1 0 1: Channel 4 1 1 0: Channel 5	R

The AVDR register holds the data from averaging of the A/D conversion results.

DATA[23:0] Bits (Data Bits)

The DATA[23:0] bits hold the values from averaging of the A/D conversion results.
The value to be stored in these bits is in accord with the setting of the MRm.SDF bit (m = 0 to 5).

OVF Flag (Overflow flag)

The OVF flag indicates that at least one of the results of A/D conversion used in calculating the average value has led to an overflow.
If an overflow has occurred, the corresponding result of conversion becomes either the maximum or minimum value, and this result is used in calculation of the average.

ERR Flag (Error Detected flag)

This flag indicates that an error has occurred in the results of A/D conversion. For details, refer to description of the DR.ERR flag.

CCH[2:0] Bits (Converted Channel Indication)

The CCH[2:0] bits indicate the channel from which the averaged data of the A/D conversion result stored in this register came.

34.2.9 Status Register (SR)

Addresses DSAD0.SR 000A 10B0h, DSAD1.SR 000A 12B0h

	b31	b30	b29	b28	b27	b26	b25	b24	b23	b22	b21	b20	b19	b18	b17	b16
	—	—	—	—	—	—	—	—	—	—	—	—	—	—	—	—
Value after reset	0	0	0	0	0	0	0	0	0	0	0	0	0	0	0	0

	b15	b14	b13	b12	b11	b10	b9	b8	b7	b6	b5	b4	b3	b2	b1	b0
	—	—	—	—	—	—	—	—	—	—	—	—	—	—	—	ACT
Value after reset	0	0	0	0	0	0	0	0	0	0	0	0	0	0	0	0

Bit	Symbol	Bit Name	Description	R/W
b0	ACT	Auto Scan Active Flag	0: Auto scan is stopped. 1: Auto scan is in progress.	R
b31 to b1	—	Reserved	These bits are read as 0.	R

The SR register indicates the state of auto scan.

ACT Flag (Auto Scan Active Flag)

The ACT flag indicates the state of auto scan.

This flag is read as 1 while A/D conversion is in progress, and as 0 when conversion is stopped.

This flag becoming 1 after input of the hardware trigger or software trigger takes up to five operating clock cycles plus four PCLKB cycles.

34.2.10 Channel m Oversampling Ratio Setting Registers (OSRm) (m = 0 to 5)

Addresses DSAD0.OSR0 000A 10C0h, DSAD0.OSR1 000A 10C4h, DSAD0.OSR2 000A 10C8h, DSAD0.OSR3 000A 10CCh, DSAD0.OSR4 000A 10D0h, DSAD0.OSR5 000A 10D4h, DSAD1.OSR0 000A 12C0h, DSAD1.OSR1 000A 12C4h, DSAD1.OSR2 000A 12C8h, DSAD1.OSR3 000A 12CCh, DSAD1.OSR4 000A 12D0h, DSAD1.OSR5 000A 12D4h

	b31	b30	b29	b28	b27	b26	b25	b24	b23	b22	b21	b20	b19	b18	b17	b16
Value after reset	0	0	0	0	0	0	0	0	0	0	0	0	0	0	0	0

	b15	b14	b13	b12	b11	b10	b9	b8	b7	b6	b5	b4	b3	b2	b1	b0
Value after reset	0	0	0	0	0	0	0	0	0	0	0	0	0	0	0	0

Note: Do not rewrite this register while the SR.ACT flag is 1 (auto scan is in progress).

The OSRm registers are used to set the channel m oversampling ratios.
The setting is only effective while the setting of the MRm.OSR[2:0] bits (m = 0 to 5) is 111b.
The oversampling ratio can be more finely specified by these bits than the values selectable with the OSR[2:0] bits.
The range of settable values is from 0 (0000 0000h) to 4095 (0000 0FFFh).
Where the setting is x ($x \neq 0$), the oversampling ratio can be calculated with the equation below.

Oversampling Ratio = $(x + 1) \times 16$

However, the oversampling ratio when x is 0 becomes 32.

Full-scale adjustment of the digital filter output is handled by bit-shifting.
For this reason, when a value that is not any power of 2 is set as the oversampling ratio, a gain (G_{DF}) from one half to 1 is produced between the inputs to and outputs from the digital filter.
The actual gain can be obtained from the following equation.

$$G_{DF} = \frac{1}{2^{(Ceil(4\log_2 OSR) - 4\log_2 OSR)}}$$

When using the OSRm register, use it in consideration of this gain.
To calibrate the gain, do so by using the gain error calibration function or software.
The setting value for the GCRm register for using the gain error calibration function can be obtained from the following equation.*1

$$GCRm = \frac{400000h}{G_{DF}}$$

Note 1. The value is only for use in calibration for the gain error of the digital filter.
To calibrate the gain error across the entire system, calculate the calibration coefficient according to the flow of calibration coefficient operations while a value is set in the OSRm register.

Table 34.6 lists examples of setting values in the OSRm register, the gains that are produced as a result, and their corresponding values for use in calibration.

Table 34.6 Examples of Settings of the OSRm Register and Gains Produced by the Digital Filter (fMOD = 500 kHz in Normal Mode)

OSRm Register	Oversampling Ratio (OSR)	Data Rate [SPS]	Gain (G_{DF})	GCRm Register
1	32	15625.000	1.000000	0040 0000h
3	64	7812.500	1.000000	0040 0000h
7	128	3906.250	1.000000	0040 0000h
15	256	1953.125	1.000000	0040 0000h
31	512	976.563	1.000000	0040 0000h
63	1024	488.281	1.000000	0040 0000h
159	2560	195.313	0.610352	0068 DB8Bh
311	4992	100.160	0.551567	0074 0871h
519	8320	60.096	0.531990	0078 4D91h
520	8336	59.981	0.536094	0077 61CCh
575	9216	54.253	0.800903	004F E8E6h
578	9264	53.972	0.817720	004E 4435h
623	9984	50.080	0.551567	0074 0871h
624	10000	50.000	0.555112	0073 4ACAh
3124	50000	10.000	0.677626	005E 7284h
3127	50048	9.990	0.680232	005E 15E4h
4095	65536	7.629	1.000000	0040 0000h

34.2.11 Channel m Gain Calibration Registers (GCRm) (m = 0 to 5)

Addresses DSAD0.GCR0 000A 1120h, DSAD0.GCR1 000A 1124h, DSAD0.GCR2 000A 1128h, DSAD0.GCR3 000A 112Ch, DSAD0.GCR4 000A 1130h, DSAD0.GCR5 000A 1134h, DSAD1.GCR0 000A 1320h, DSAD1.GCR1 000A 1324h, DSAD1.GCR2 000A 1328h, DSAD1.GCR3 000A 132Ch, DSAD1.GCR4 000A 1330h, DSAD1.GCR5 000A 1334h

	b31	b30	b29	b28	b27	b26	b25	b24	b23	b22	b21	b20	b19	b18	b17	b16
Value after reset	Coefficient per chip															

	b15	b14	b13	b12	b11	b10	b9	b8	b7	b6	b5	b4	b3	b2	b1	b0
Value after reset	Coefficient per chip															

Note: Do not rewrite this register while the SR.ACT flag is 1 (auto scan is in progress)

Each GCRm register holds a coefficient for use in calibrating the gain error, and its setting represents a 24-bit fixed-point number with two bits for the integer part and 22 bits for the fractional part. The upper 8 bits are reserved and the write value should be 00h.

Each result of A/D conversion is multiplied by the value set in this register.

The settable range of values is from 0000 0000h (times 0.0) to 00FF FFFFh (times 3.9999) (refer to Table 34.7).

Note that when the setting is 0000 0000h, the result of conversion will always be 00 0000h.

Calibration coefficients corresponding to all combinations of the CCR.LPMD and the CRm.GAIN[4:0] bits (m = 0 to 5) are stored in the flash memory at the time of shipment from the factory. The value after a reset is the calibration coefficient for a gain of 1 (PGA disabled and BUF disabled) in normal mode.

When the value of the GAIN[4:0] bits is changed, the calibration coefficient corresponding to the current values of the LPMD and GAIN[4:0] bits is read out from the flash memory and written over the value in the GCRm register.

Any value is settable in the GCRm register.

Note that the setting is overwritten by the default calibration coefficient when the value of the GAIN[4:0] bits is changed.

Table 34.7 Typical Settings and the Gain Coefficients

Setting in the GCRm Register	Gain Coefficient
0000 0000h	Times 0.000
0010 0000h	Times 0.250
0020 0000h	Times 0.500
0030 0000h	Times 0.750
0038 0000h	Times 0.875
003C CCCCh	Approximately times 0.950
0040 0000h	Times 1.000
0043 3333h	Approximately times 1.050
0048 0000h	Times 1.125
0060 0000h	Times 1.500
0080 0000h	Times 2.000
00A0 0000h	Times 2.500
00C0 0000h	Times 3.000
00E0 0000h	Times 3.500
00FF FFFFh	Approximately times 4.000 (Times 3.9999…)

34.2.12 Channel m Offset Calibration Register (OFCRm) (m = 0 to 5)

Addresses DSAD0.OFCR0 000A 1140h, DSAD0.OFCR1 000A 1144h, DSAD0.OFCR2 000A 1148h, DSAD0.OFCR3 000A 114Ch, DSAD0.OFCR4 000A 1150h, DSAD0.OFCR5 000A 1154h, DSAD1.OFCR0 000A 1340h, DSAD1.OFCR1 000A 1344h, DSAD1.OFCR2 000A 1348h, DSAD1.OFCR3 000A 134Ch, DSAD1.OFCR4 000A 1350h, DSAD1.OFCR5 000A 1354h

	b31	b30	b29	b28	b27	b26	b25	b24	b23	b22	b21	b20	b19	b18	b17	b16
Value after reset	Coefficient per chip															

	b15	b14	b13	b12	b11	b10	b9	b8	b7	b6	b5	b4	b3	b2	b1	b0
Value after reset	Coefficient per chip															

Note: Do not rewrite this register while the SR.ACT flag is 1 (auto scan is in progress)

Each OFCRm register holds a coefficient for use in calibrating the offset errors, and the value is handled as a signed 24-bit integer. Upper 8 bits are reserved. When writing, write 00h or FFh to these bits. These bits are read as 00h.
The value set in this register is subtracted from each result of A/D conversion to obtain the value to be stored as the result.
The settable range of values is from FF80 0000h (–8388608) to 007F FFFFh (+8388607) (refer to Table 34.8).
Note when the setting is 0000 0000h (0), offset calibration is not applied to the results of conversion.
The value after a reset is the calibration coefficient under the condition of a gain of 2 in normal mode for each channel at the time of shipment from the factory. When using the register under a condition other than that described above, set appropriate values after measuring the offset errors.

Table 34.8 Typical Settings and the Offset Coefficients

Setting in the OFCRm Register	Offset Coefficient
FF80 0000h	–8388608
FFC0 0000h	–4194304
FFE0 0000h	–2097152
FFF0 0000h	–1048576
FFFF 0000h	–65536
FFFF F000h	–4096
FFFF FFFFh	–1
0000 0000h	0
0000 0001h	1
0000 1000h	4096
0001 0000h	65536
0010 0000h	1048576
0020 0000h	2097152
0040 0000h	4194304
007F FFFFh	8388607

34.3 Details of Functions

34.3.1 Overview of Functions

Analog signals are input to the DSAD via the programmable gain instrumentation amplifier (PGA).
The results of A/D conversion are stored in the data register after they have been filtered by the $sinc^4$ filter.
Calibration registers are included for use in compensating for the offset and gain errors in the digital filter outputs.
A/D conversion is driven by a clock signal generated from the operating clock.
Setting of data rates per channel by changing the oversampling ratio is possible.
For the flow, refer to section 34.4, Flows of Control.

34.3.2 Setting the Analog Input Channels

Each DSADn (n = 0, 1) has six analog input channels, and the sources of the input signals on the positive side (ANDSnmP) and negative side (ANDSnmN) for channels m (m = 0 to 5) of the DSADn are selected from among the AIN0 to AIN11 pins by the analog multiplexer (AMUX) as shown in Figure 34.3.
Differential, pseudo-differential, or single-ended input can be selected per channel by setting the AMUX.
For details of the AMUX, refer to section 33, Analog Front End (AFE).

When an auto scan is started, the input signals for each of the six channels are selected in sequence according to the following register settings.

- MR.CHmEN bits: The channels for A/D conversion
- MRm registers: Operating modes for each of the channels
- CRm registers: The number of times for A/D conversion and gain for each of the channels

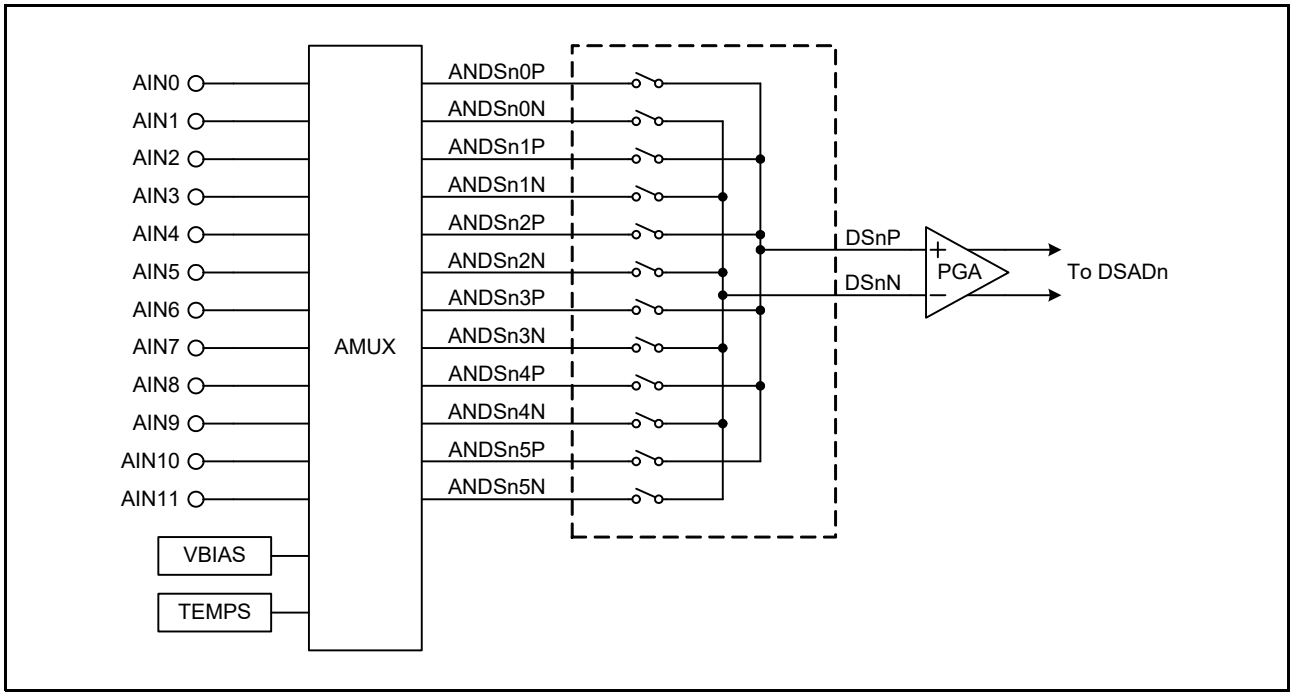

Figure 34.3 Block Diagram of Analog Input Channels

34.3.3 Programmable Gain Instrumentation Amplifiers (PGAs)

Each DSAD has a programmable gain instrumentation amplifier (PGA) featuring low offset voltage, low noise and high input impedance and an analog input buffer (BUF) consisting of a voltage follower circuit as shown in Figure 34.4.
The range of selectable gains for the PGA is from 1 to 128.
The PGA can also be bypassed.
At the time, bypassing or use of the BUFs is also selectable.

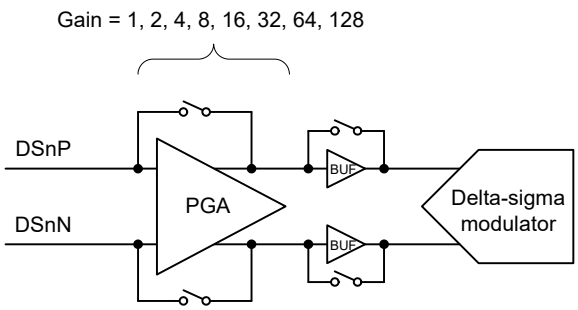

Figure 34.4 Connection of the Programmable Gain Instrumentation Amplifier

The following bits are used to set the gain for each of the PGAs.

- CRm.GAIN[4:0] bits (m = 0 to 5): Gain

34.3.4 DSAD Configuration

Signals from the input multiplexer are input to the delta-sigma modulator via the selected combination of the programmable gain instrumentation amplifier (PGA) and analog input buffer (BUF).
The results of A/D conversion are stored in the DR register after being filtered by the sinc^4 filter.
A/D conversion is driven by the operating clock generated by the PCLKB.
Set the CCR.CLKDIV[3:0] bits so that the frequency of the operating clock becomes 4 MHz (or 1 MHz when in low-power mode).
The frequency for the modulator clock is 500 kHz in normal mode and 125 kHz in low power mode.
The data rates can be set per channel by changing the oversampling ratios.
Figure 34.5 is a block diagram of the DSAD.

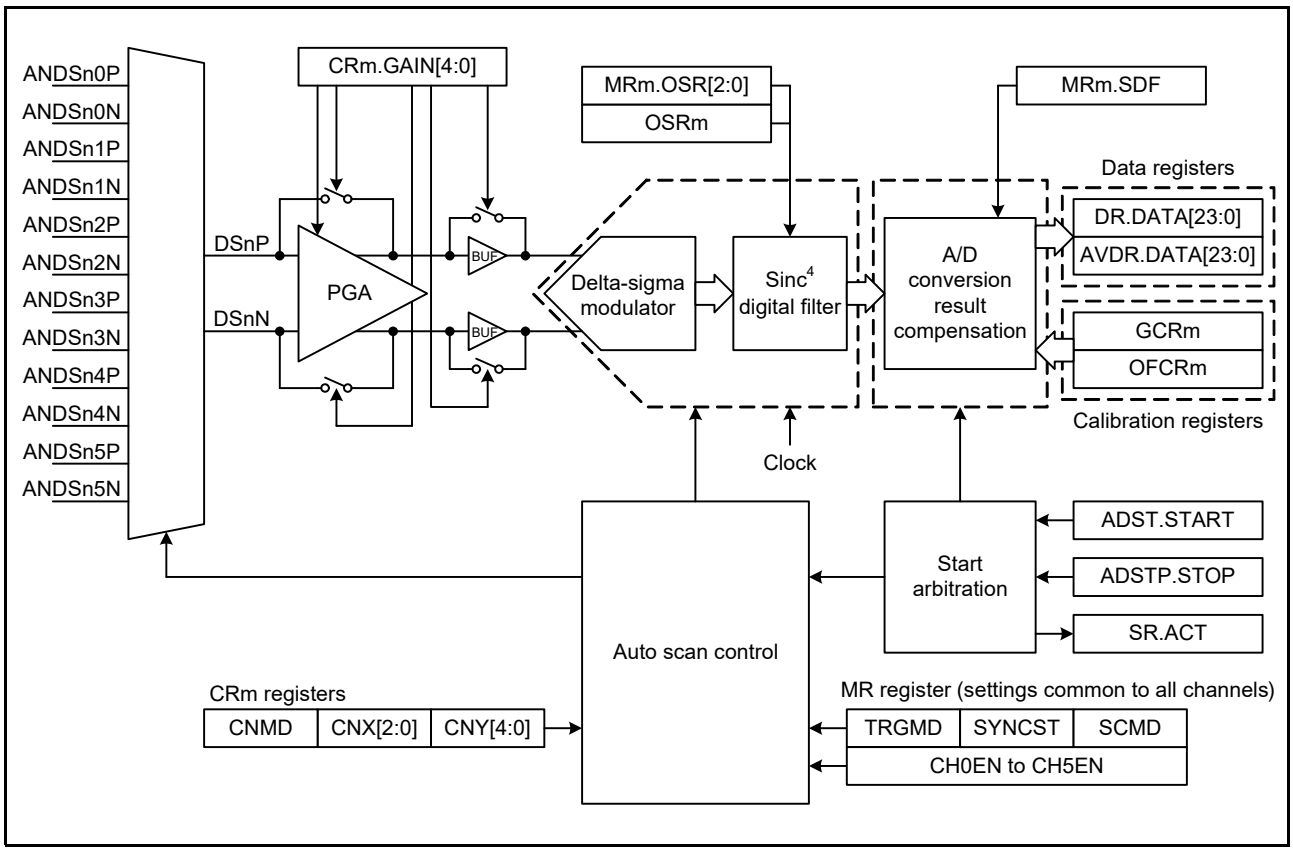

Figure 34.5 Block Diagram of DSAD (n = 0, 1; m = 0 to 5)

The following registers are used to set the operation of the DSAD.

- CCR register: Operating clock
- MR register: Trigger mode, scan mode and channels to be used.
- MRm registers: Oversampling ratio, data format, and other items
- ADST register: Starting conversion
- ADSTP register: Stopping conversion
- CRm registers: The gain and the number of times conversion is to proceed
- DR register: Reading the results of conversion
- AVDR register: Reading the averaged values
- GCRm registers: Calibration to compensate for the gain error
- OFCRm registers: Calibration to compensate for the offset error

34.3.5 Input Voltages to the DSAD and the Results of A/D Conversion

Input voltages to the DSAD and the corresponding results of A/D conversion are described in this section.
The results of A/D conversion when the reference voltage for the A/D converter is $\pm V_{REF}$ (V_{REF} = VRnP – VRnN) and the range of input voltage is full-scale are shown and listed below.

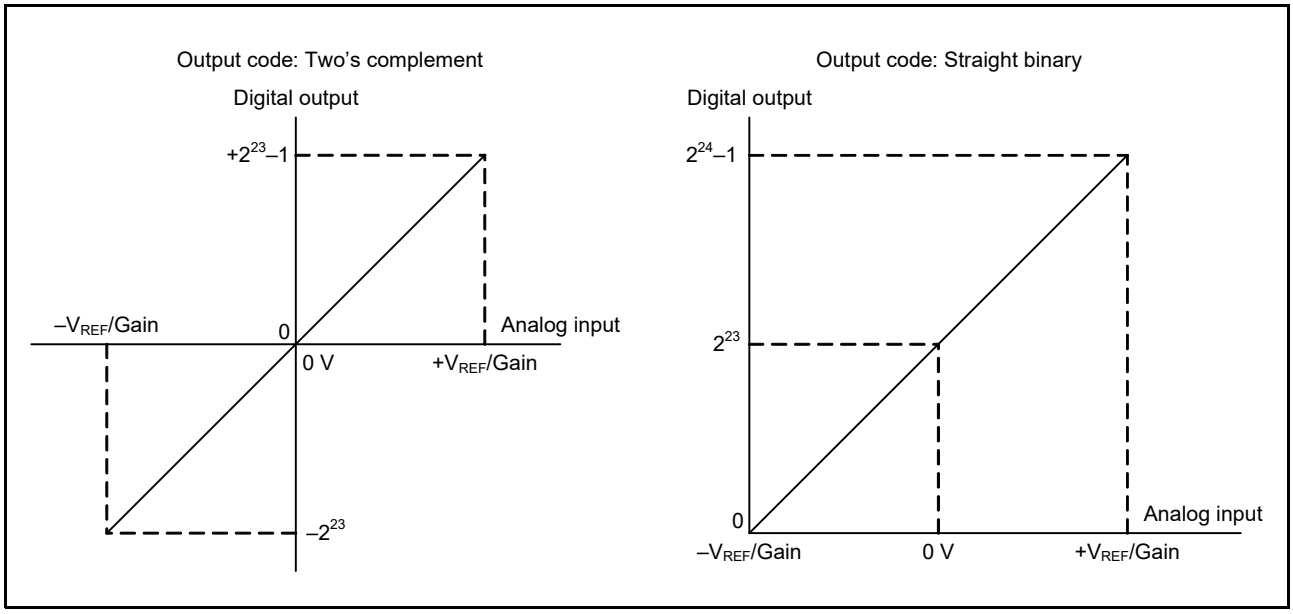

Figure 34.6 Input Voltage to the DSAD and the Results of A/D Conversion

Table 34.9 Input Voltage to the DSAD and the Results of A/D Conversion

	Results of A/D Conversion	
Input Voltage to the DSAD	**Two's Complement Format**	**Straight Binary Format**
$+V_{REF}$ / Gain V	$2^{23} – 1$	$2^{24} – 1$
0 V	0	2^{23}
$–V_{REF}$ / Gain V	$–2^{23}$	0

The results in the range indicated in Table 34.9 can be obtained from the equations shown below.
(1) Two's complement format

$$\text{Input voltage to the DSAD} = \frac{V_{REF} \times 2}{Gain} \times \frac{DR.DATA[23:0]}{2^{24}}$$

(2) Straight binary format

$$\text{Input voltage to the DSAD} = \frac{V_{REF} \times 2}{Gain} \times \frac{DR.DATA[23:0]}{2^{24}} - \frac{V_{REF}}{Gain}$$

34.3.6 Control of the DSADs

A/D conversion is executed sequentially from the channel 0 side in the selected mode when 1 is written to the ADST.START bit to start an auto scan. Skipping A/D conversion of specific channels can be set up by using the MR.CH0EN to CH5EN bits.

Table 34.10 indicates the relationship between the settings of control registers and auto scan operating modes.

The CNX[2:0] and CNY[4:0] bits in the CRm register (m = 0 to 5) indicate the number of times A/D conversion is to proceed before conversion moves on from the current channel to the next channel. When the CNX[2:0] bits are 000b and the CNY[4:0] bits are 0 0000b, they indicate that the operating mode for the given channel is one-shot and that operation is to stop after an A/D conversion has been completed.

Other items to be set for A/D conversion (gain of the PGA, and oversampling ratio) are also selectable per channel.

When averaging is selected, the sum of the number of times conversion to proceed is calculated as (the number of times for A/D conversion specified by the CNX[2:0] and CNY[4:0] bits) × (the number of times set in the MRm.AVDN[1:0] bits).

The A/D conversion results are stored in the DR register.

Whenever A/D conversion is completed once, an interrupt request (ADIn) is generated. When the averaging of the A/D conversion results is enabled by the given setting in the MRm register (m = 0 to 5), the timing of the generation of interrupt requests (ADIn) is selectable as either per A/D conversion or as upon storing of the averaged value. An interrupt request (SCANENDn) is generated per cycle of auto scan from channel 0 to channel 5.

Figure 34.7 shows the sequence of auto scan.

Table 34.10 Relationship Between the Settings of Control Registers and Auto Scan Operating Modes

MR.TRGMD Bit	MR.SCMD Bit	CRm.CNX[2:0] Bits	CRm.CNY[4:0] Bits	Trigger	Operating Mode
0	0	≠ 000b	≠ 00000b	Software	Continuous scan
0	0	≠ 000b	= 00000b	Software	Continuous scan
0	0	= 000b	≠ 00000b	Software	Continuous scan
0	0	= 000b	= 00000b	Software	Continuous scan (scanning stops due to one-shot operation)*1
0	1	≠ 000b	≠ 00000b	Software	Single scan
0	1	≠ 000b	= 00000b	Software	Single scan
0	1	= 000b	≠ 00000b	Software	Single scan
0	1	= 000b	= 00000b	Software	Single scan (scanning stops due to one-shot operation)*1
1	0	≠ 000b	≠ 00000b	Hardware	Single scan*2
1	0	≠ 000b	= 00000b	Hardware	Single scan*2
1	0	= 000b	≠ 00000b	Hardware	Single scan*2
1	0	= 000b	= 00000b	Hardware	Single scan (scanning stops due to one-shot operation)*1
1	1	≠ 000b	≠ 00000b	Hardware	Single scan
1	1	≠ 000b	= 00000b	Hardware	Single scan
1	1	= 000b	≠ 00000b	Hardware	Single scan
1	1	= 000b	= 00000b	Hardware	Single scan (scanning stops due to one-shot operation)*1

Note 1. When the settings of the CNX[2:0] and CNY[4:0] bits in the corresponding CRm register (m = 0 to 5) are 000b and 0 0000b, respectively, one-shot operation is given priority over single scan mode or continuous scan mode.

Note 2. When the hardware trigger is selected, the operating mode is always single scan.

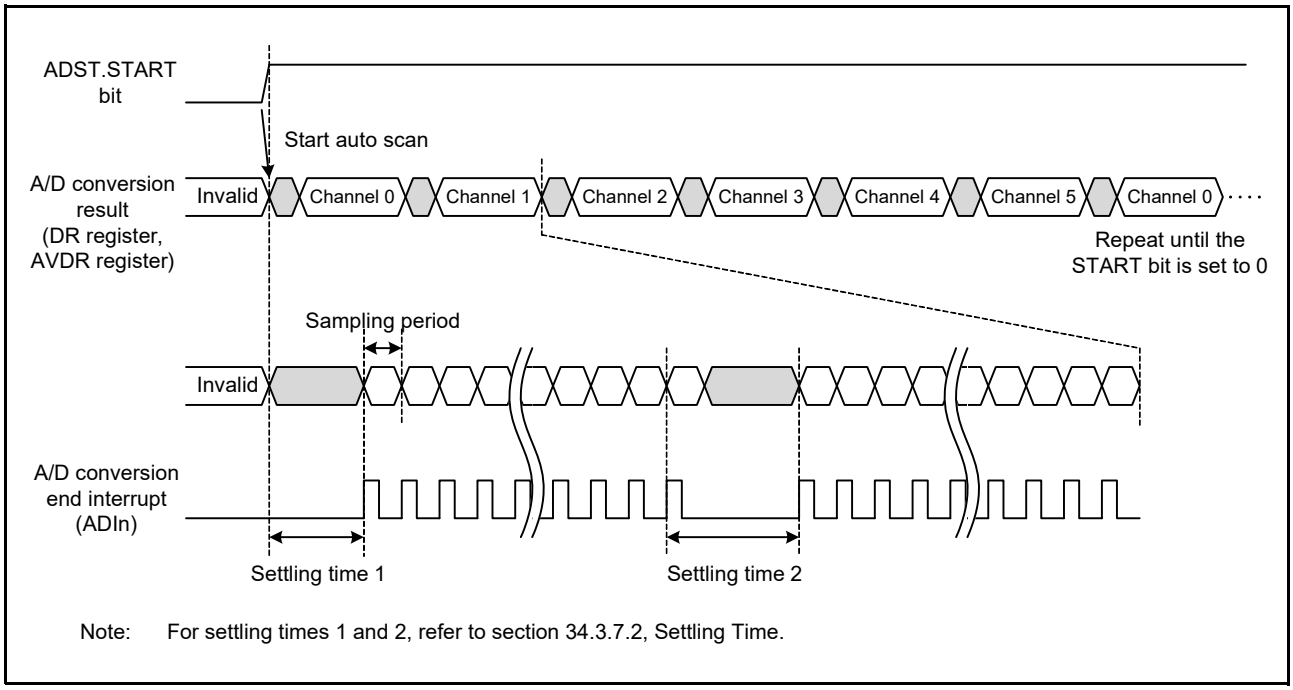

Figure 34.7 Auto Scan Sequence

(1) Skipping of Conversion Channels

Figure 34.8 shows an example of the operation when the MR.CH5EN to MR.CH0EN bits = 10 1010b (channels 0, 2, and 4 are enabled (channels 1, 3, and 5 are skipped)), the CRm.CNX[2:0] bits ≠ 000b and the CRm.CNY[4:0] bits ≠ 00000b (m = 0, 2, 4), and the MR.SCMD bit = 0 (continuous scan).

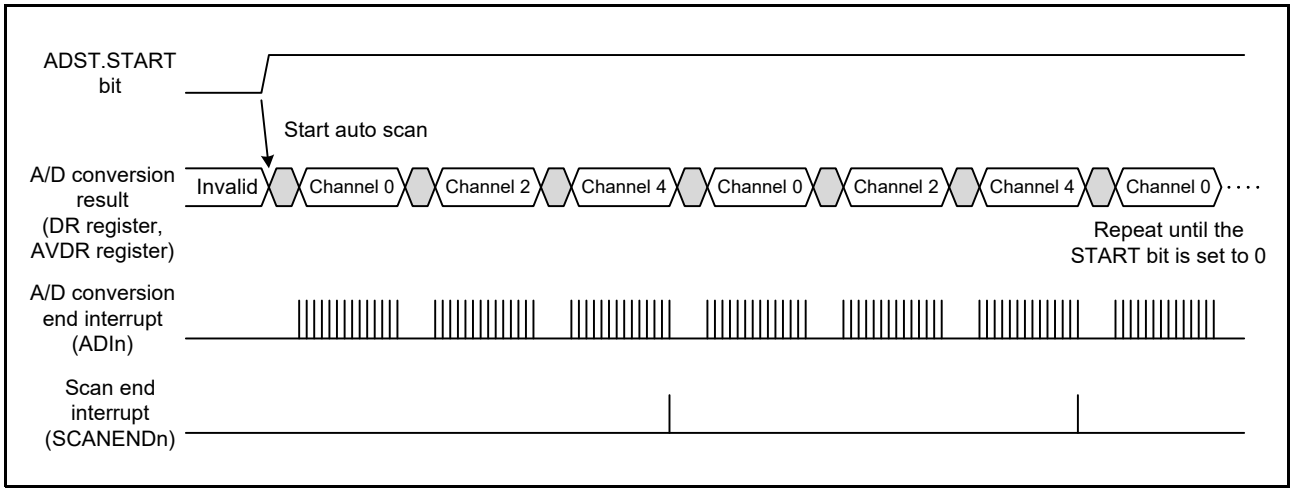

Figure 34.8 Skipping of Conversion Channels

(2) One-shot Operation

Figure 34.9 shows an example of the operation when the MR.CH5EN to MR.CH0EN bits = 11 1000b (channels 0, 1, and 2 are enabled), the CRm.CNX[2:0] bits ≠ 000b and the CRm.CNY[4:0] bits ≠ 00000b (m = 0, 1), the CR2.CNX[2:0] bits = 000b and CR2.CNY[4:0] bits = 00000b (one-shot), and the MR.SCMD bit = 0 (continuous scan).

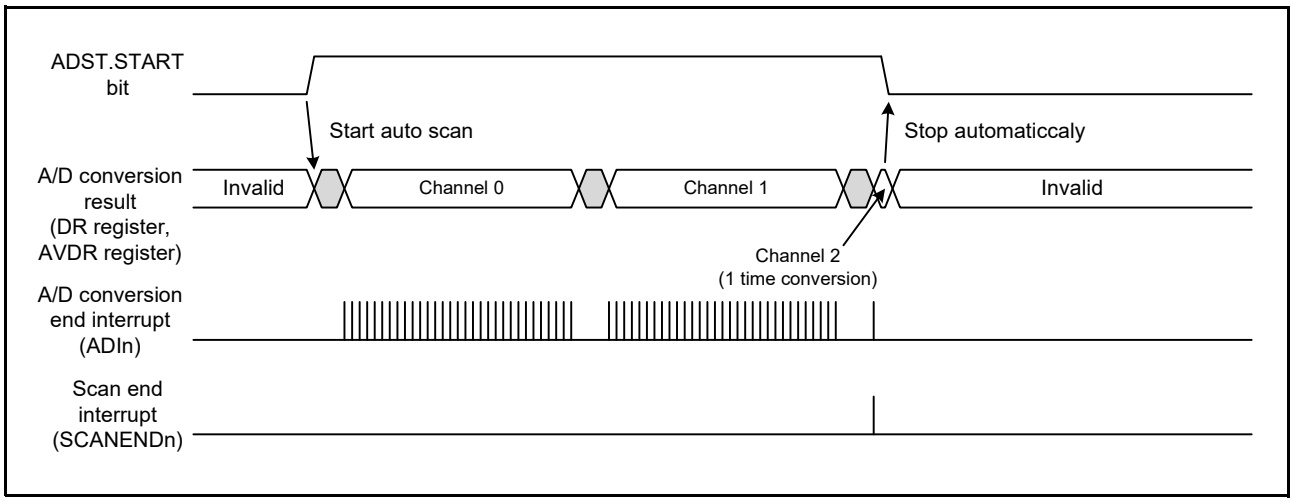

Figure 34.9 One-Shot Operation

(3) Continuous Conversion on a Single Channel

Figure 34.10 shows an example of the operation when the MR.CH5EN to MR.CH0EN bits = 11 1101b (channel 1 is enabled), the CR1.CNX[2:0] bits ≠ 000b and CR1.CNY[4:0] bits ≠ 00000b, and the MR.SCMD bit = 0 (continuous scan).

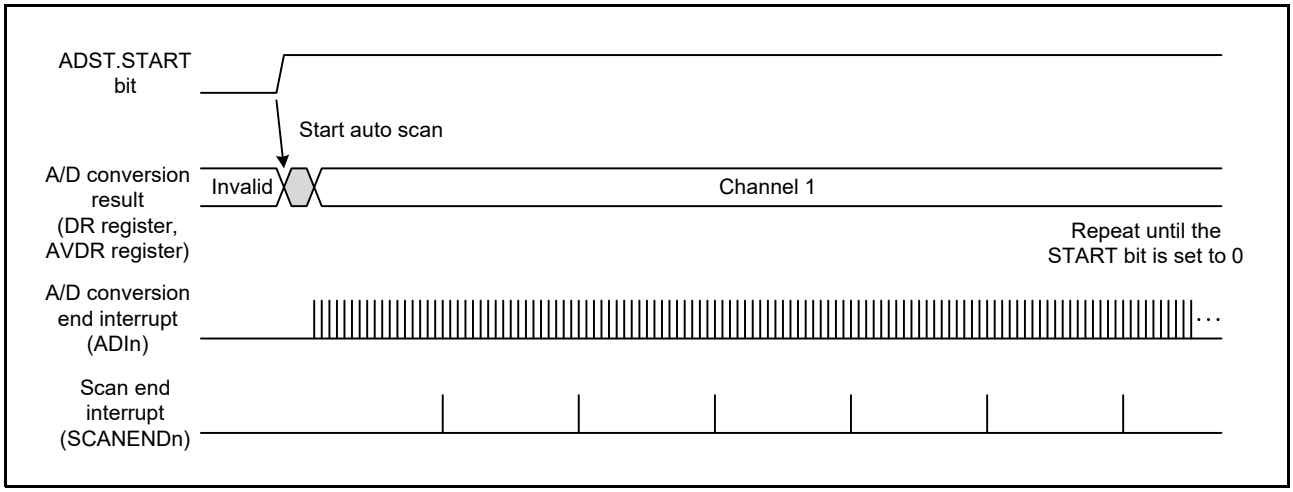

Figure 34.10 Continuous Conversion on a Single Channel

Note: A scan end interrupt (SCANENDn) is requested per number of times for A/D conversion set in the CRm register even in continuous conversion.

(4) Single Scan Operation

Figure 34.11 shows an example of the operation when the MR.CH5EN to MR.CH0EN bits = 10 0000b (channels 0 to 4 are enabled), the CRm.CNX[2:0] bits ≠ 000b and CRm.CNY[4:0] bits ≠ 00000b (m = 0 to 4), and the MR.SCMD bit = 1 (single scan).

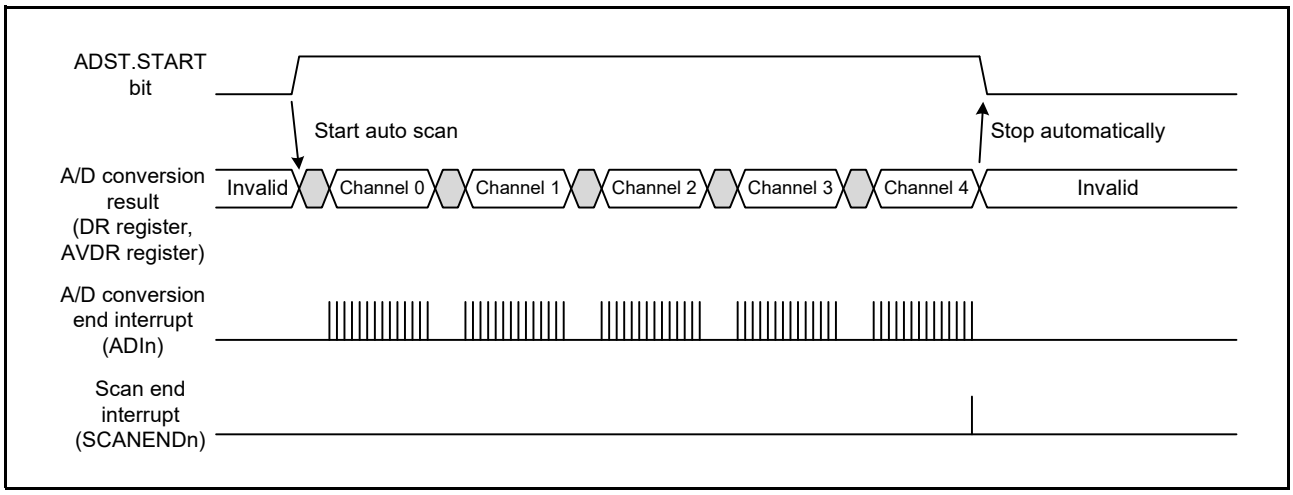

Figure 34.11 Single Scan Operation

34.3.7 Digital Filter

34.3.7.1 Digital Filter Operation

The fourth-order sinc filter handles down-sampling of the results of A/D conversion.
The following equation represents the transfer function for the digital filter.
OSR in the equation for the transfer function represents the oversampling ratio set in the MRm.OSR[2:0] bits (m = 0 to 5) and the OSRm registers, and is equivalent to the decimation ratio of the sinc filter.

$$H(Z) = \left(\frac{1}{OSR} \times \frac{1 - Z^{-OSR}}{1 - Z^{-1}}\right)^4$$

34.3.7.2 Settling Time

The specified lengths of settling time 1 and settling time 2 are defined as follows and the values are indicated in Table 34.11. These times are required until a first (overall or per-channel) result of A/D conversion is output.

- Settling time 1: Period until output of the first A/D conversion end interrupt after an A/D conversion trigger (refer to settling time 1 indicated in Figure 34.7).
- Settling time 2: Period from output of the last A/D conversion end interrupt before channel switching to output of the first A/D conversion end interrupt after channel switching (refer to settling time 2 indicated in Figure 34.7).

Table 34.11 Settling times per operating mode

Item		Normal Mode	Low Power Mode
Settling time 1	min	4T + 256 μs + 2 × t_{cPCLKB} + 10 × t_{cOPCK}	4T + 1024 μs + 2 × t_{cPCLKB} + 10 × t_{cOPCK}
	max	4T + 256 μs + 3 × t_{cPCLKB} + 13 × t_{cOPCK}	4T + 1024 μs + 3 × t_{cPCLKB} + 11 × t_{cOPCK}
Settling time 2	min	4T + 256 μs – 1 × t_{cPCLKB}	4T + 1024 μs – 1 × t_{cPCLKB}
	max	4T + 256 μs + 1 × t_{cPCLKB}	4T + 1024 μs + 1 × t_{cPCLKB}

T: Sampling time (= $1/f_{DR}$)
t_{cPCLKB}: PCLKB cycle time
t_{cOPCK}: Cycle time of the operating clock

Note: The settling times are automatically generated by hardware.

34.3.7.3 Characteristics of Digital Filter

Table 34.12 lists examples of characteristics of the sinc^4 filter and Figure 34.12 shows the frequency response of the sinc^4 filter.

Table 34.12 Examples of Data Rates, Settling Times, and 50 Hz and 60 Hz Rejection Characteristics

Data Rate (SPS)	Oversampling Ratio	Conversion Time (ms)	Settling Time (ms)	Bandwidth (–3dB) (Hz)	Rejection of 50 Hz (±1 Hz) (dB)	Rejection of 60 Hz (±1 Hz) (dB)
10	50048	100	400.6	2.26	110	110
50	9984	20	80.1	11.3	110	—
54	9216	18.5	74.0	12.3	70	70
60	8320	16.7	66.8	13.6	—	110

Note: The above results are based on the assumption of a 4-MHz operating clock, 500-kHz modulator clock, and use of the high-speed on-chip oscillator.

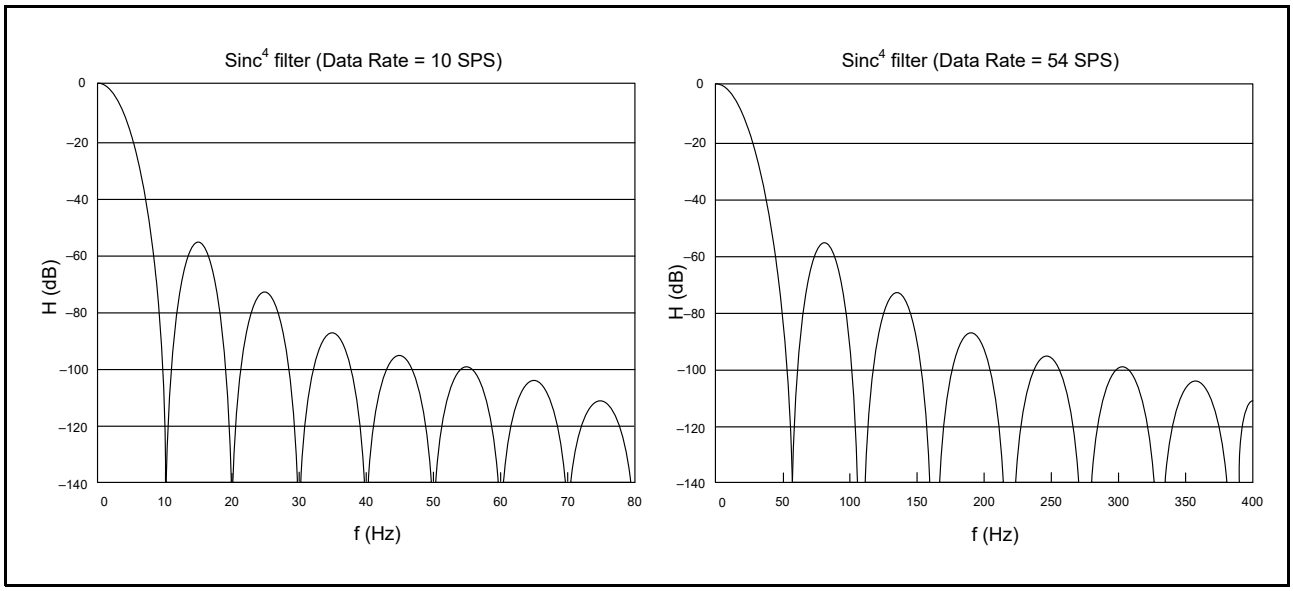

Figure 34.12 Sinc^4 Filter Frequency Responses

34.3.8 A/D Conversion Modes

Each DSAD has two modes of conversion.
The conversion modes are selectable per channel by using the MRm.CVMD bits (m = 0 to 5).
A brief summary of the types of operation is given in Table 34.13.

Table 34.13 Operating Modes

Operating Mode	Description of Operation
Normal operating mode	Initialization and a wait for stabilization are only executed for the first A/D conversion, and only A/D conversion is executed in the second and subsequent conversions.
Single-cycle settling mode	Initialization and a wait for stabilization are executed for each conversion.

Figure 34.13 shows the sequences by operating mode.

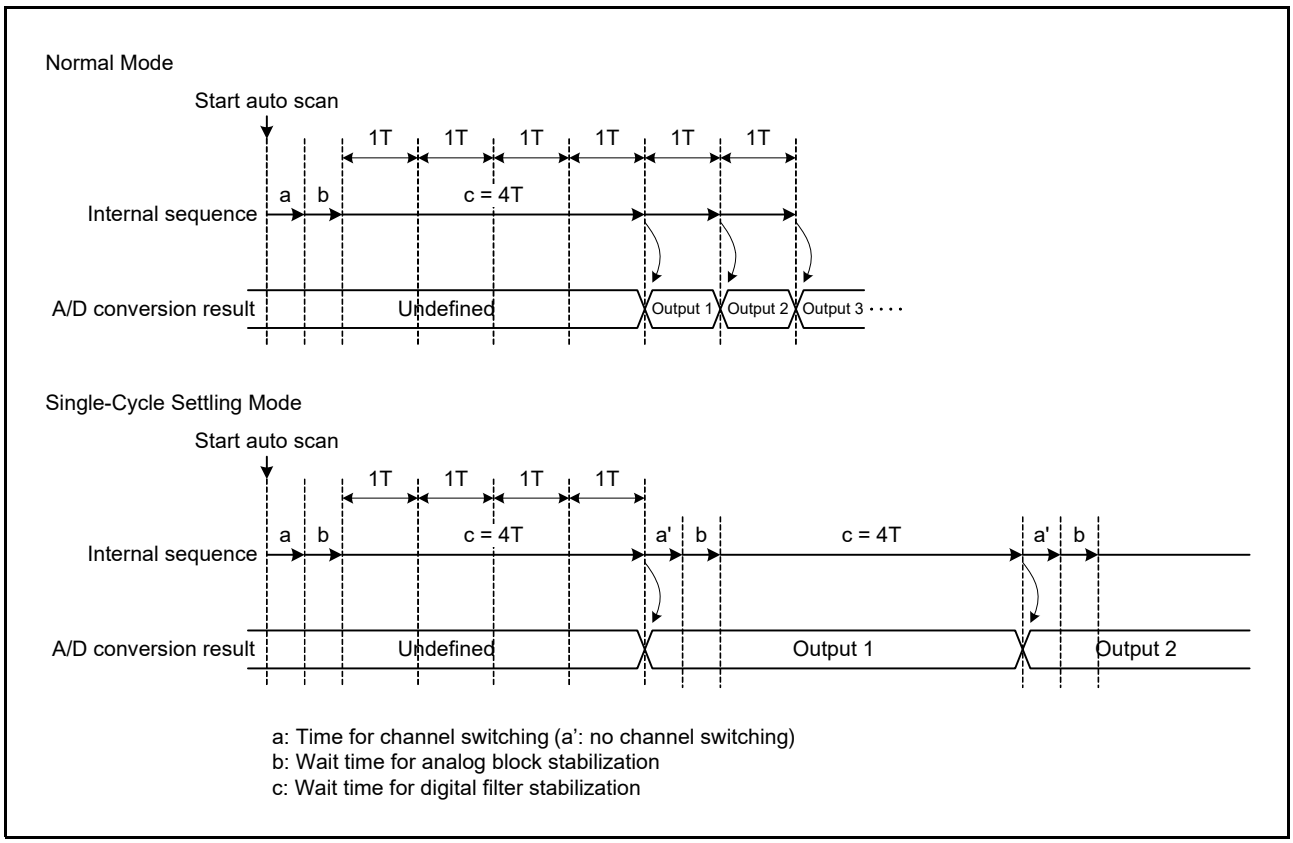

Figure 34.13 A/D Conversion Sequences by Operating Mode

34.3.9 Offset Error and Gain Error Calibration Function

Calculating the gain and offset calibration coefficients under the actual operating conditions helps to realize high-precision A/D conversion.
Perform A/D conversion of the reference voltage for calibration provided to the DSnP and DSnN lines under the actual operating conditions, calculate the most suitable calibration coefficients from the differences between the expected values and the results of conversion, and set the calibration coefficients in the OFCRm and GCRm registers (m = 0 to 5).
Calibration is executed in the order of offset error calibration followed by gain error calibration.

34.3.9.1 Calculating the Offset and Gain Error Calibration Coefficients

Offset and gain error calibration coefficients are obtained by comparing the results of A/D conversion of a reference voltage and the expected value.
Calculate the calibration coefficients per channel in the order of the coefficient required to compensate for the offset error and the coefficient required to compensate for the gain error.
To calculate calibration coefficients, execute A/D conversion after setting the OFCRm and GCRm registers (m = 0 to 5) to 0000 0000h and 0040 0000h, respectively (the latter sets a gain of 1).
Also, to calculate gain error calibration coefficient, calculate the offset error calibration coefficient beforehand, and then execute A/D conversion in the state where the offset calibration coefficient has been set in the OFCRm register.
To calculate calibration coefficients, refer to section 34.4.6, Calculation of Calibration Coefficients for Offset Error and Gain Error.

34.3.10 Disconnect Detection Assist Function

The disconnect detection assist function is used to detect disconnection of external devices from the pins of the MCU.
When disconnect detection assist is enabled, a current source is connected to the inputs of the PGA.
The value for current is set in the MRm.DISC[1:0] bits (m = 0 to 5).
Connection of the current sources for the positive side and negative side of the differential inputs is separately selectable by the MRm.DISAP bit and DISAN bit for each channel, respectively.
In case of disconnection or when the supply capability of the input source does not reach the current (0.5 µA, 2 µA, 4 µA or 20 µA) selected by the DISC[1:0] bits, the results of conversion converge to around the full-scale value with repeated A/D conversion (when straight binary format is selected for the results, the negative full-scale value is 00 0000h)
Figure 34.14 shows an example of disconnect detection by charge and discharge.
For details of the settings, refer to section 34.4.7, Detect Disconnection.

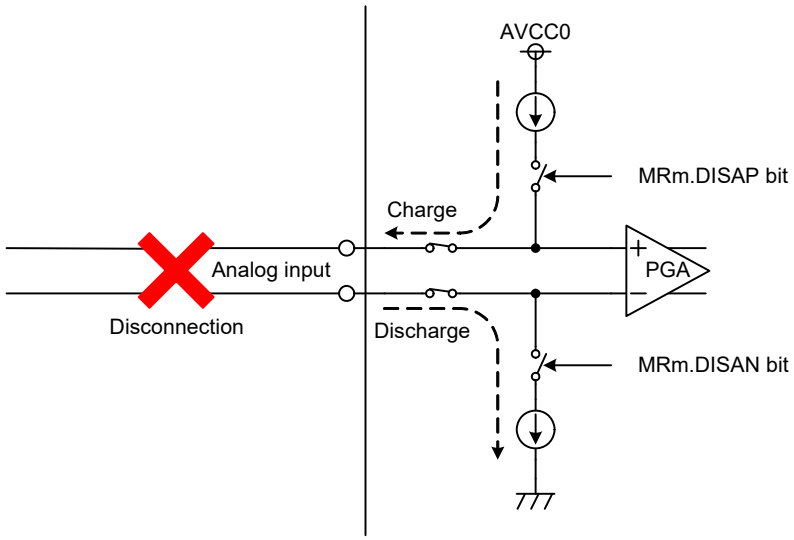

Note: As the conversion results will depend on the external circuit, only use this function after thorough evaluation.

Figure 34.14 Example of Disconnect Detection

34.3.11 Inter-Unit Synchronized Start Function

The timing with which auto scan by the DSAD0 and DSAD1 starts can be synchronized.
This function can be used to acquire results of A/D conversion for inter-related input signals at the same time.
The function synchronizes the timing with which sampling starts by using a common DSAD A/D conversion start trigger for DSAD0 and DSAD1.
Either a software or hardware trigger can be used as the start trigger.
To use the function, set the DSAD0.MR.SYNCST and DSAD1.MR.SYNCST bits to 1.
The operation of A/D conversion after the synchronized start will follow the register settings of each of the units.
To stop A/D conversion while the inter-unit synchronized start function is in use, processing to stop A/D conversion by both units is required.

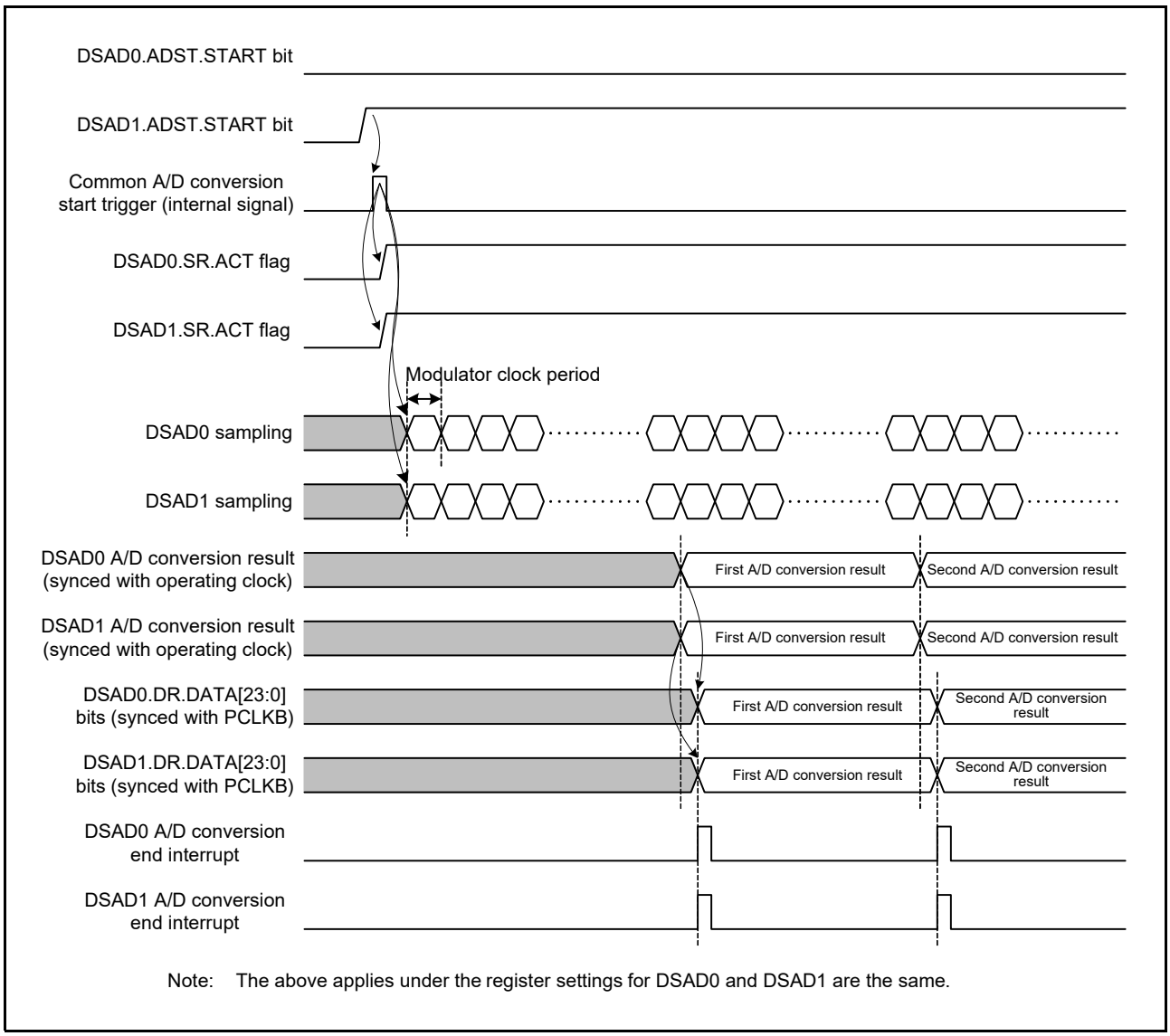

Figure 34.15 Inter-Unit Synchronized Start Function

34.4 Flows of Control

Figure 34.16 shows a overall flow of the DSADs. For details of each step, refer to section 34.4.1 to section 34.4.4.

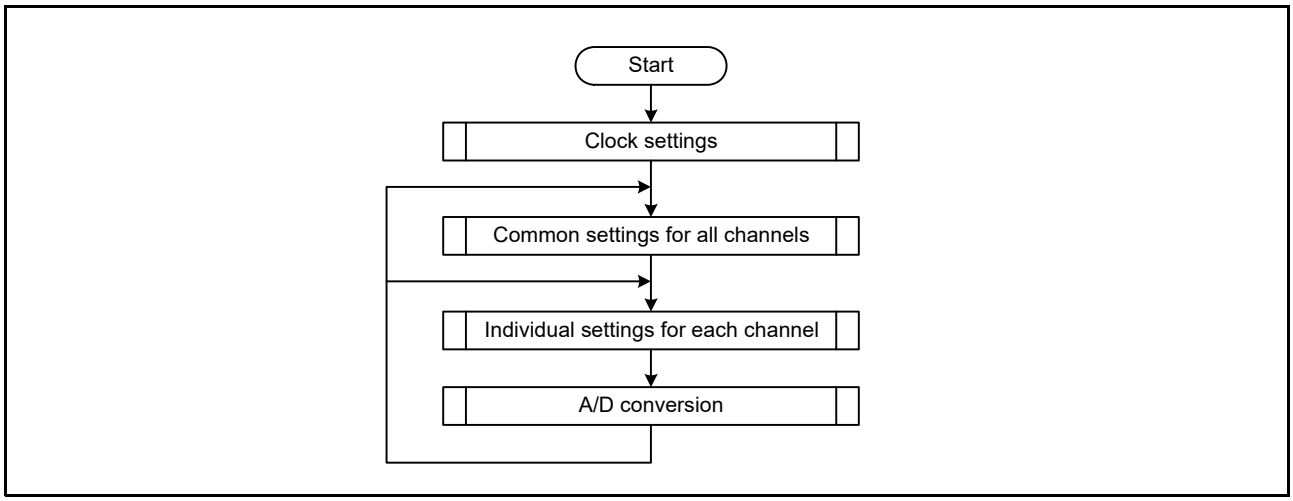

Figure 34.16 Overall Flow

34.4.1 Clock Settings

Set the CCR register to specify the operating clock and operating mode of the DSADs.
If the inter-unit synchronized start function is to be used, set a same value to the CCR registers of DSAD0 and DSAD1.

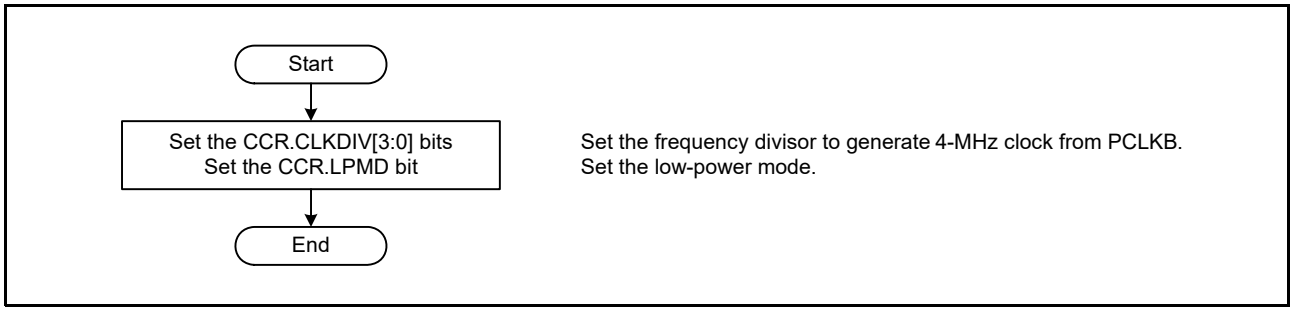

Figure 34.17 Flow of Clock Settings

34.4.2 Common Settings for All Channels

Set the MR register to specify the common settings for all channels in DSAD.
Temporarily select the software trigger to prevent an unintended start of A/D conversion by an input of a false hardware trigger.
If the inter-unit synchronized start function is to be used, set both of the MR.SYNCST bits in DSAD0 and DSAD1 to 1.

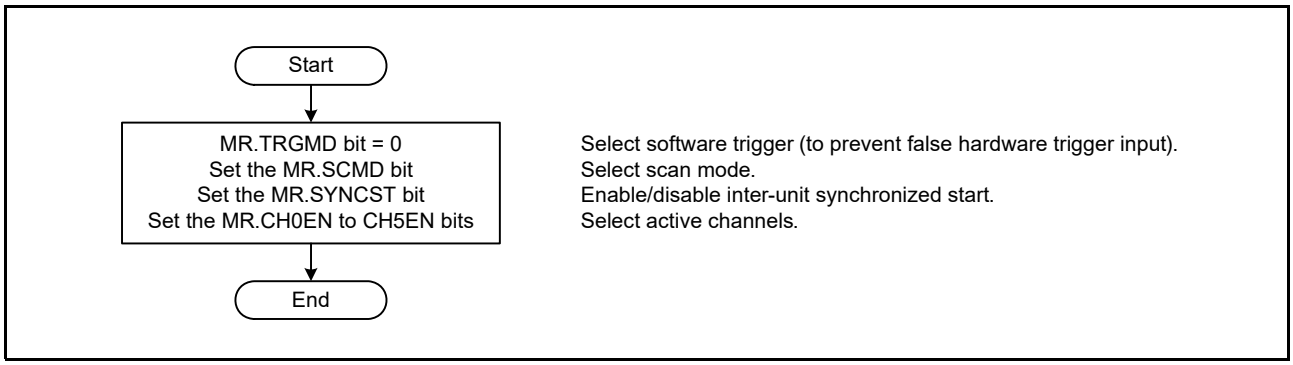

Figure 34.18 Flow of the Common Settings for All Channels

34.4.3 Individual Settings for Each Channel

Set the MRm, CRm, OSRm, GCRm, and OFCRm registers to specify the operations for each channel (m = 0 to 5).

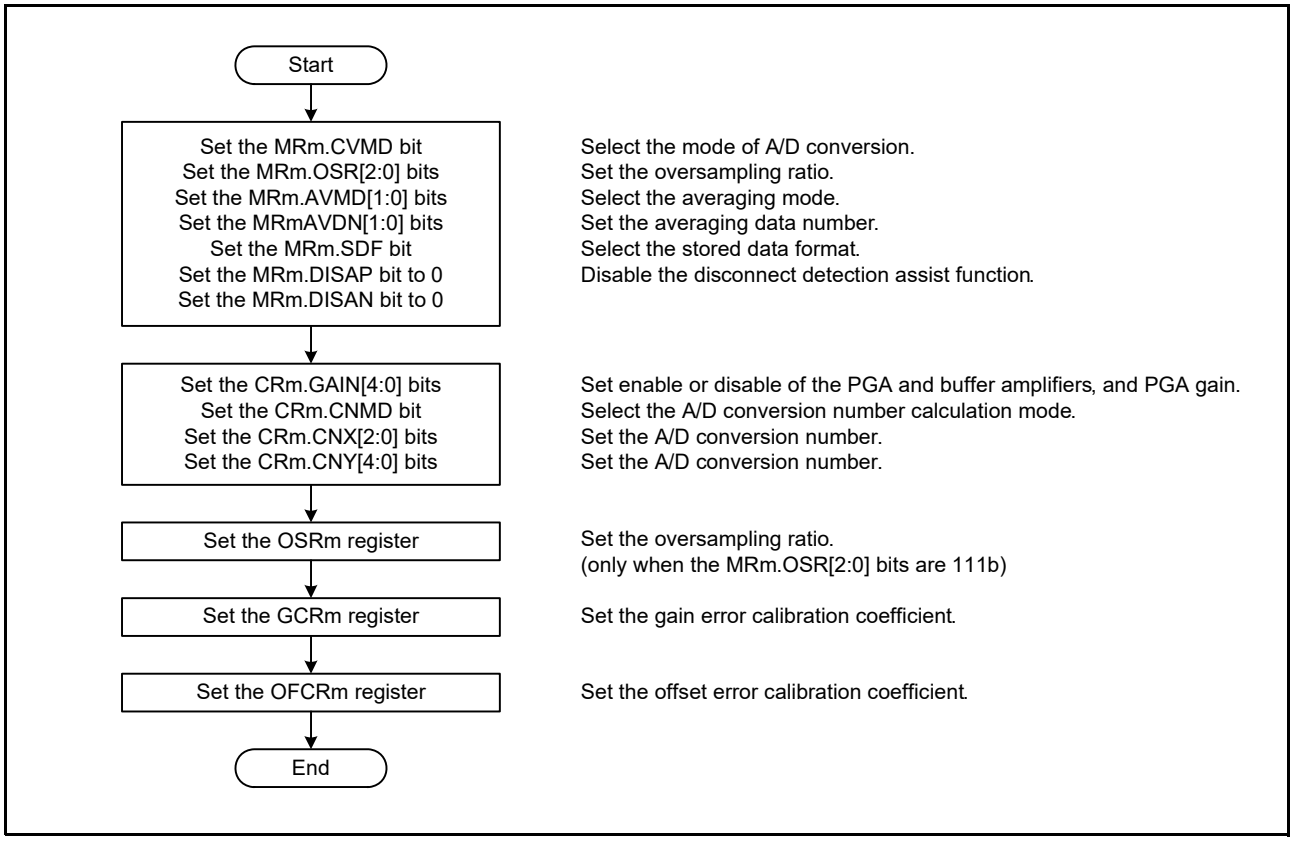

Figure 34.19 Flow of Individual Settings for Each Channel (m = 0 to 5)

34.4.4 A/D Conversion

Select a trigger used to start auto scan. When the trigger is input, auto scan starts.
If a hardware trigger is to be used in the inter-unit synchronized start function, set the MR.TRGMD bit in either of DSAD0 or DSAD1 to 1. If a software trigger is to be used in the inter-unit synchronized start function, set the ADST.START bit in either of DSAD0 or DSAD1 to 1.
While the auto scan is in progress, read the DR or AVDR register and confirm the conversion result for every A/D conversion end interrupt (ADI0, ADI1). If the ERR flag is set to 1, discard the conversion result and abort the auto scan.

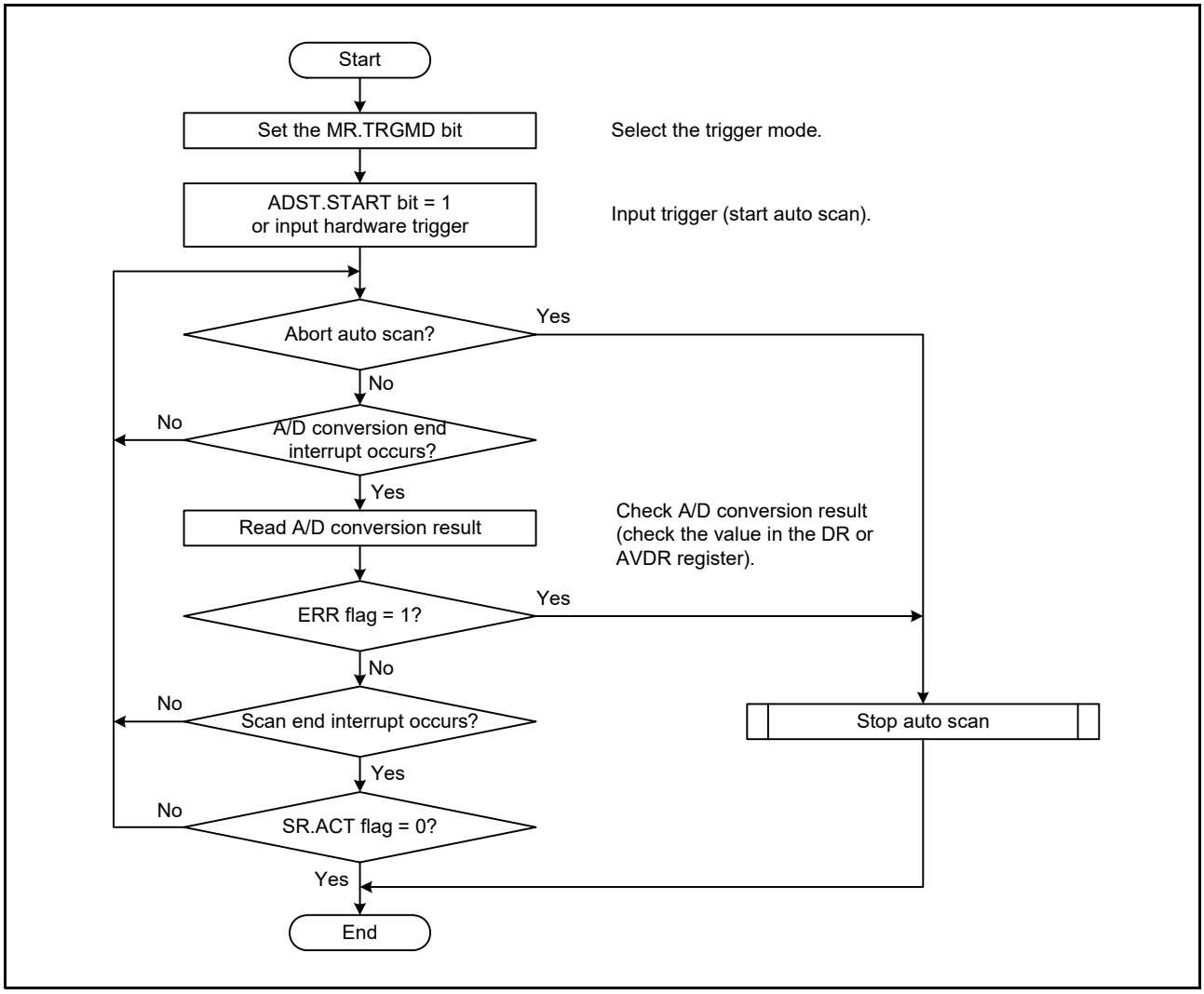

Figure 34.20 Flow of A/D Conversion

34.4.5 Stop Auto Scan

When the auto scan is to be stopped, select a software trigger and disable the inter-unit synchronized start function to prevent a further start trigger to be input. After that, stop the auto scan by using the ADSTP.STOP or ADST.START bit. If both DSAD0 and DSAD1 operate by using the inter-unit synchronized start function, perform this procedure for each unit.

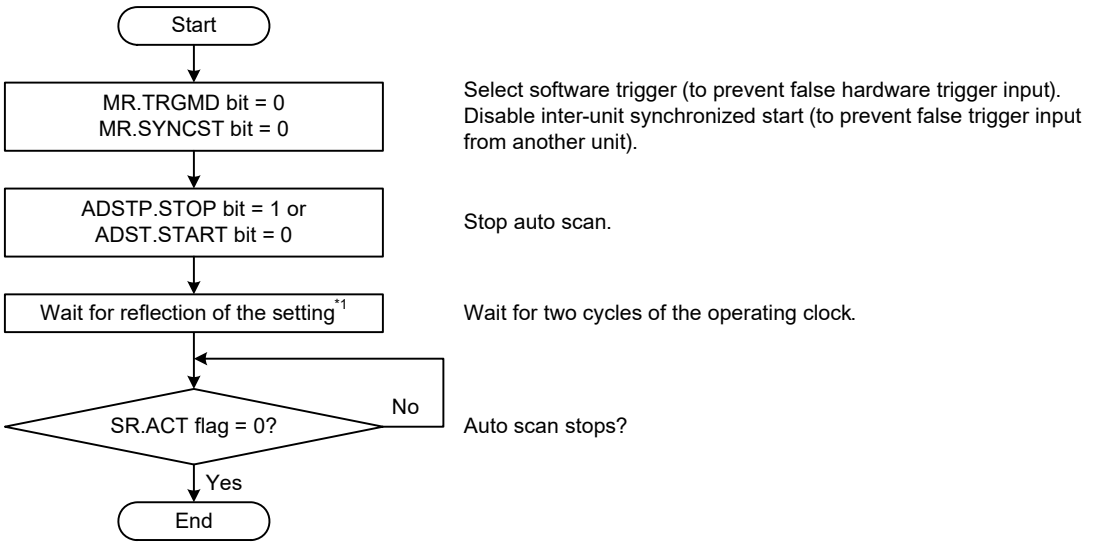

Note 1. This step is not necessary when the auto scan is aborted in continuous scan mode (except one-shot operation).

Figure 34.21 Flow of Stop Auto Scan

34.4.6 Calculation of Calibration Coefficients for Offset Error and Gain Error

Figure 34.22 shows the procedure for calculating the offset and gain error calibration coefficients.
Start by setting the calibrations not to operate in the individual settings for each of the channels. Then measure the offset error, set the offset error calibration coefficient, and then measure the gain error.
The calculation of the calibration coefficients and setting to registers should be performed for every channel to be used.

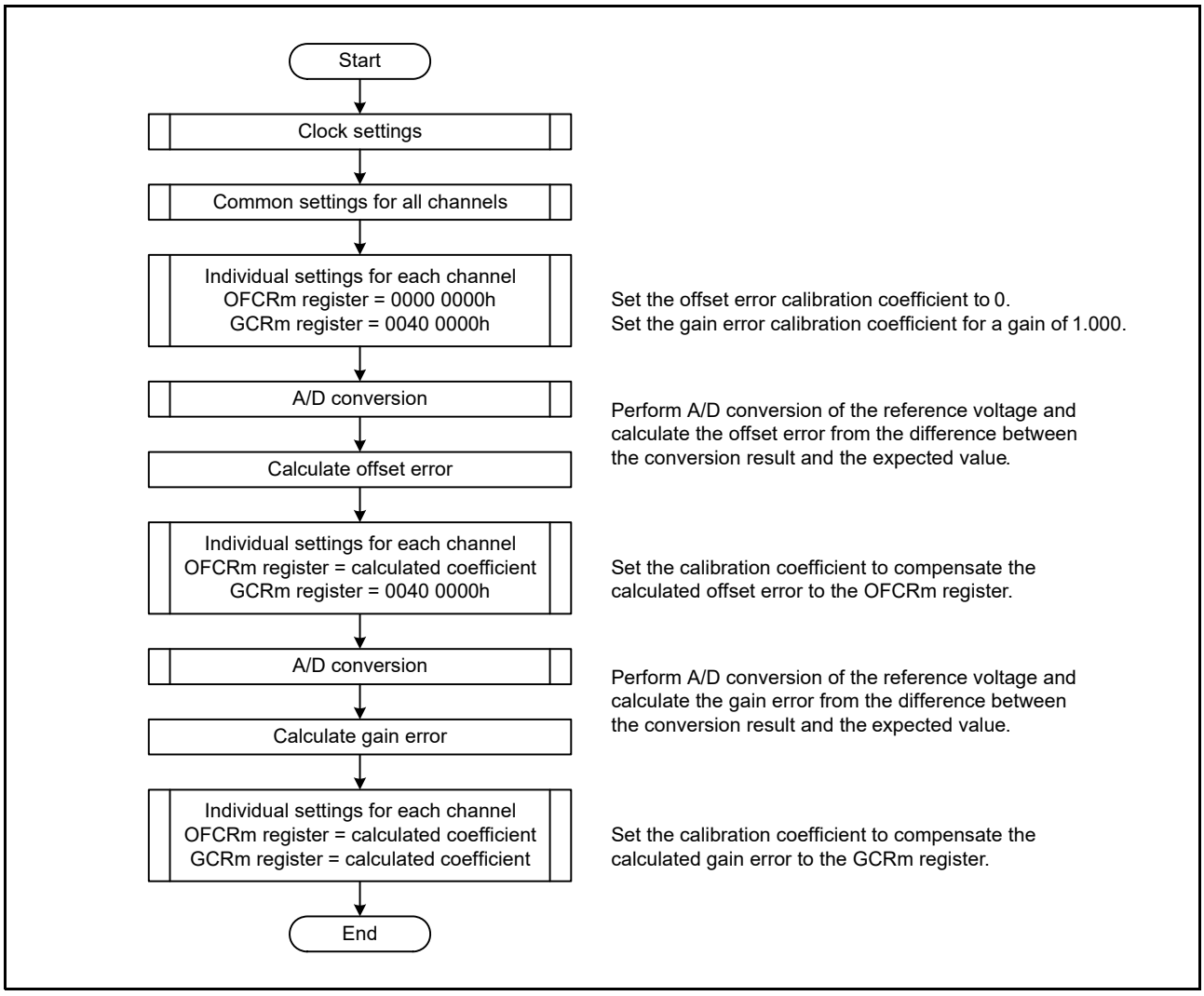

Figure 34.22 Flow of Calculating the Calibration Coefficients for Offset Error and Gain Error (m = 0 to 5)

34.4.7 Detect Disconnection

When the disconnection is to be detected, follow the procedure shown in Figure 34.23.
Set the either or both of the MRm.DISAP and MRm.DISAN bits to 1 between the individual settings for each channel and the A/D conversion. After that, proceed with A/D conversion and judge if the signal is disconnected or not from the result.

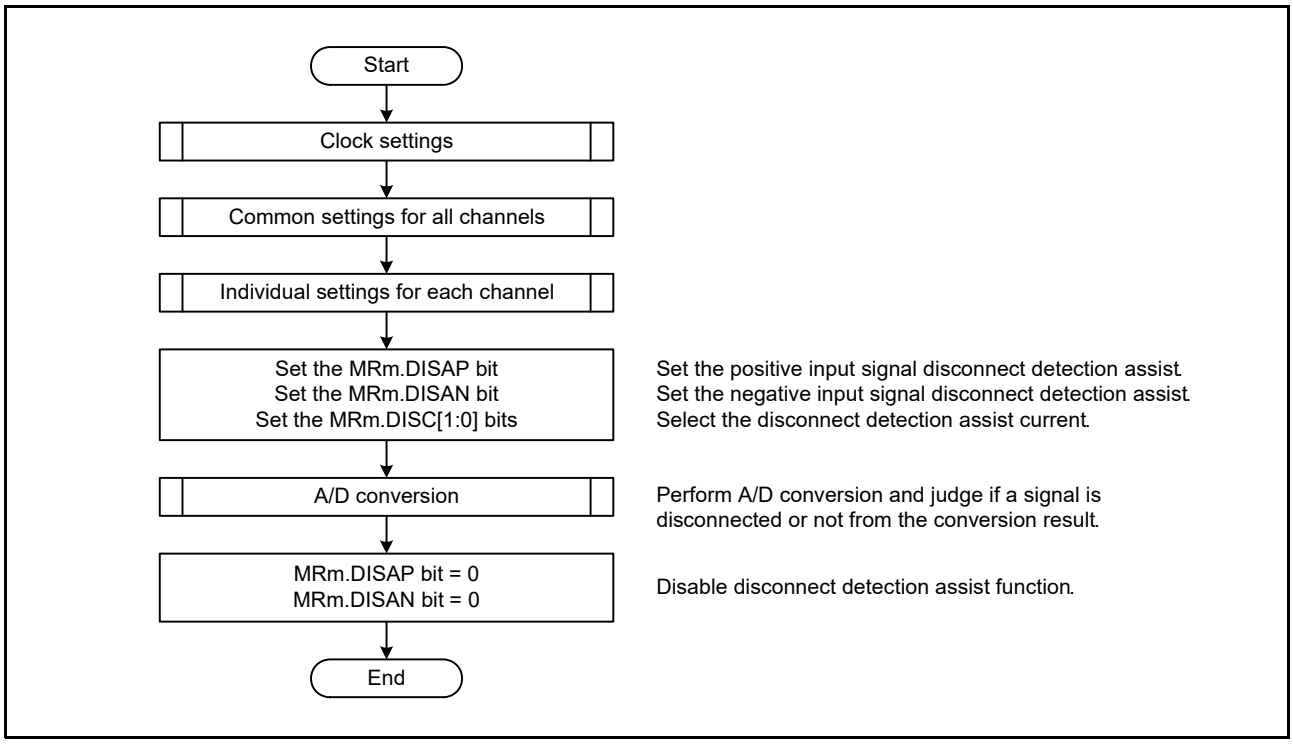

Figure 34.23 Flow of Detect Disconnection (m = 0 to 5)

34.5 Usage Notes

34.5.1 Settings of the Module Stop Function

Each DSADn (n = 0, 1) can be enabled or disabled by module stop control register A (MSTPCRA).
After a reset, the DSADn is stopped. The registers become accessible when it is released from the module stop state. For details, refer to section 11, Low Power Consumption.
If a DSADn is placed in the module stop state while the OPCR.DSADnEN bit is set to 1, the analog circuits do not stop operating so the analog power supply current does not decrease.
To reduce the analog power supply current of a DSADn while it is in the module stop state, set the DSADnEN bit to 0 to disable the DSADn.

34.5.2 Transition to the Low Power Consumption State

Stop A/D conversion before a transition to the module stop state or software standby mode.
To stop A/D conversion, refer to section 34.4.5, Stop Auto Scan.

34.5.3 Notes on Setting the Operating Clock

Set the CCR.CLKDIV[3:0] bits so that the operating clock frequency becomes 4 MHz (or 1 MHz in low power mode).
If the frequency is other than 4 MHz (or 1 MHz in low power mode), normal A/D conversion may not be possible.

34.5.4 Notes on Changing the Operating Clock

When the settings of the CCR.LPMD or CCR.CLKDIV[3:0] bits have been changed, wait for at least two cycles of PCLKB and three cycles of the operating clock plus 2 µs before starting further A/D conversion, and only then start the A/D conversion.

34.5.5 Notes on Changing the SYNCST Bit

When the setting of the MR.SYNCST bit has been changed, wait for at least three cycles of the operating clock and 4 µs before starting further A/D conversion, and only then start the A/D conversion.

34.5.6 Notes on Using Two DSAD units

When using both DASD0 and DSAD1 regardless of whether or not using the inter-unit synchronized start function, set the MR.SYNCST bit to 1 on both units to make the operating clocks of DSAD0 and DSAD1 to be in phase after having set the CCR registers.
When not using the inter-unit synchronized start function, wait at least three cycles of the operating clock plus 4 µs, and then set the MR.SYNCST bits to 0 on both units.

35. 12-Bit A/D Converter (S12ADE)

35.1 Overview

This MCU incorporates one unit of a 12-bit successive approximation A/D converter. Up to 6 channel analog inputs are selectable for conversion.

The 12-bit A/D converter converts a maximum of 6 selected channels of analog inputs, which have been selected, into a 12-bit digital value through successive approximation.

The A/D converter has three operating modes: single scan mode in which the analog inputs of up to 6 arbitrarily selected channels are converted only once in ascending channel order; and continuous scan mode in which the analog inputs of up to 6 arbitrarily selected channels are continuously converted in ascending channel order; and group scan mode in which up to 6 channels of the analog inputs are arbitrarily divided into two groups (group A and group B) and converted in ascending channel order in each group.

In group scan mode, the conditions for scanning start of group A and group B (synchronous trigger) can be independently selected, thus allowing A/D conversion of group A and group B to be started independently. When group-A priority control is selected along with operation as described above, if a request to start scanning for group A is received during A/D conversion for group B, the conversion operation for group B is discontinued and the conversion for group A starts, which is given priority.

In double trigger mode, one analog input channel arbitrarily selected is converted in single scan mode or group scan mode (group A), and the resulting data of A/D conversion started by the first and second synchronous triggers are stored into different registers (duplication of A/D conversion data).

Self-diagnosis is executed once at the beginning of each scan, and one of the three voltages internally generated in the 12-bit A/D converter is converted.

The external pin input (VREFH0) or the analog reference voltage (AVCC0) is selectable as the reference voltage on the high-potential side. The external pin input (VREFL0) or the analog reference voltage (AVSS0) is selectable as the reference voltage on the low-potential side.

This IP has a compare function (window A and window B). This function is used to specify the high-side reference value and low-side reference value for window A and window B, respectively. When the A/D-converted value of the selected channel meets the comparison conditions, the ELC event (S12ADWMELC/S12ADWUMELC) is output according to the event conditions (A or B, A and B, A exor B). Furthermore, the comparator operation to compare the A/D-converted value with the low-side reference value is also enabled.

The A/D data storage buffer is a ring buffer consisting of 16 buffers to sequentially store A/D converted data.

Table 35.1 lists the specifications of the 12-bit A/D converter and Table 35.2 lists the functions of the 12-bit A/D converter. Figure 35.1 shows a block diagram of the 12-bit A/D converter.

Table 35.1 Specifications of 12-Bit A/D Converter (1/2)

Item	Description
Number of units	One unit
Input channels	Up to 6 channels
A/D conversion method	Successive approximation method
Resolution	12 bits
Conversion time	1.4 μs per channel (when A/D conversion clock ADCLK = 32 MHz)
A/D conversion clock	Peripheral module clock PCLKB*1 and A/D conversion clock ADCLK*1 can be set so that the frequency ratio should be one of the following. PCLKB to ADCLK frequency ratio = 1:1, 1:2, 2:1, 4:1, 8:1 ADCLK is set using the clock generation circuit.
Data registers	• 6 registers for analog input, 1 for A/D-converted data duplication in double trigger mode • One register for self-diagnosis • The results of A/D conversion are stored in 12-bit A/D data registers. • 12-bit accuracy output for the results of A/D conversion • The value obtained by adding up A/D-converted results is stored as a value in the number of bit for conversion accuracy + 2 bits/4 bits*2 in the A/D data registers in A/D-converted value addition mode. • Double trigger mode (selectable in single scan and group scan modes): The first piece of A/D-converted analog-input data on one selected channel is stored in the data register for the channel, and the second piece is stored in the duplication register.
Operating modes	• Single scan mode: A/D conversion is performed only once on the analog inputs of up to 6 channels arbitrarily selected. • Continuous scan mode: A/D conversion is performed repeatedly on the analog inputs of up to 6 channels arbitrarily selected. • Group scan mode: Analog inputs of up to 6 channels arbitrarily selected, are divided into group A and group B, and A/D conversion of the analog input selected on a group basis is performed only once. The conditions for scanning start of group A and group B (synchronous trigger) can be independently selected, thus allowing A/D conversion of group A and group B to be started independently. • Group scan mode (when group A is given priority): If a group A trigger is input during A/D conversion on group B, the A/D conversion on group B is stopped and A/D conversion is performed on group A. Restart (rescan) of A/D conversion on group B after completion of A/D conversion on group A can be set.
Conditions for A/D conversion start	• Software trigger • Synchronous trigger Trigger by the multi-function timer pulse unit (MTU), the event link controller (ELC). • Asynchronous trigger A/D conversion can be triggered by the external trigger ADTRG0# pin.
Functions	• Variable sampling state count • Self-diagnosis of 12-bit A/D converter • Selectable A/D-converted value addition mode or average mode • Analog input disconnection detection function (discharge function/precharge function) • Double trigger mode (duplication of A/D conversion data) • Automatic clear function of A/D data registers • Compare function (window A and window B) • 16 ring buffers when the compare function is used
Interrupt sources	• In the modes except double trigger mode and group scan mode, A/D scan end interrupt request (S12ADI0) can be generated on completion of single scan. • In double trigger mode, A/D scan end interrupt request (S12ADI0) can be generated on completion of double scan. • In group scan mode, an A/D scan end interrupt request (S12ADI0) can be generated on completion of group A scan, whereas an A/D scan end interrupt request (GBADI) for group B can be generated on completion of group B scan. • When double trigger mode is selected in group scan mode, A/D scan end interrupt request (S12ADI0) can be generated on completion of double scan of group A, whereas A/D scan end interrupt request (GBADI) specially for group B can be generated on completion of group B scan. • The S12ADI0 and GBADI interrupts can activate the DMA controller (DMAC) and the data transfer controller (DTC).

Table 35.1 Specifications of 12-Bit A/D Converter (2/2)

Item	Description
Event link function	• An ELC event is generated on completion of scans other than group B scan in group scan mode. • An ELC event is generated on completion of group B scan in group scan mode. • An ELC event is generated on completion of all scans. • Scan can be started by a trigger output by the ELC. • An ELC event is generated according to the event conditions of the window compare function in single scan mode.
Low power consumption function	• Module stop state can be set.*3, *4

Note 1. The peripheral module clock PCLKB frequency is set according to the setting of the SCKCR.PCKB[3:0] bits and the A/D conversion clock ADCLK frequency is set according to the setting of the SCKCR.PCKD[3:0] bits.
Note 2. The number of extended bits during addition differs depending on the addition count.
2-bit extension: 1-time to 4-time conversion (addition zero to three times)
4-bit extension: 16-time conversion (addition 15 times)
Note 3. See section 11, Low Power Consumption for details.
Note 4. Wait for 1 μs or longer to start A/D conversion after release from the module stop state.

Table 35.2 Functions of 12-Bit A/D Converter

Item			Pin Name, Abbreviation
Analog input channels			AN000 to AN005
Conditions for A/D conversion start	Software	Software trigger	Enabled
	Asynchronous trigger	ADTRG0#	Enabled
	Synchronous trigger	Compare match/input capture from MTU0.TGRA	TRG0AN
		Compare match/input capture from MTU0.TGRB	TRG0BN
		Compare match/input capture from MTU0 to MTU4.TGRA or underflow (trough) of MTU4.TCNT in complementary PWM mode	TRGAN
		Compare match from MTU0.TGRE	TRG0EN
		Compare match from MTU0.TGRF	TRG0FN
		Compare match between MTU4.TADCORA and MTU4.TCNT (interrupt skipping function)	TRG4AN
		Compare match between MTU4.TADCORB and MTU4.TCNT (interrupt skipping function)	TRG4BN
		Compare match between MTU4.TADCORA and MTU4.TCNT, or compare match between MTU4.TADCORB and MTU4.TCNT (interrupt skipping function)	TRG4ABN
		ELC trigger	Enabled
Interrupt			S12ADI0, GBADI interrupt
Setting of the module stop function*1			MSTPCRA.MSTPA17 bit

Note 1. See section 11, Low Power Consumption for details.

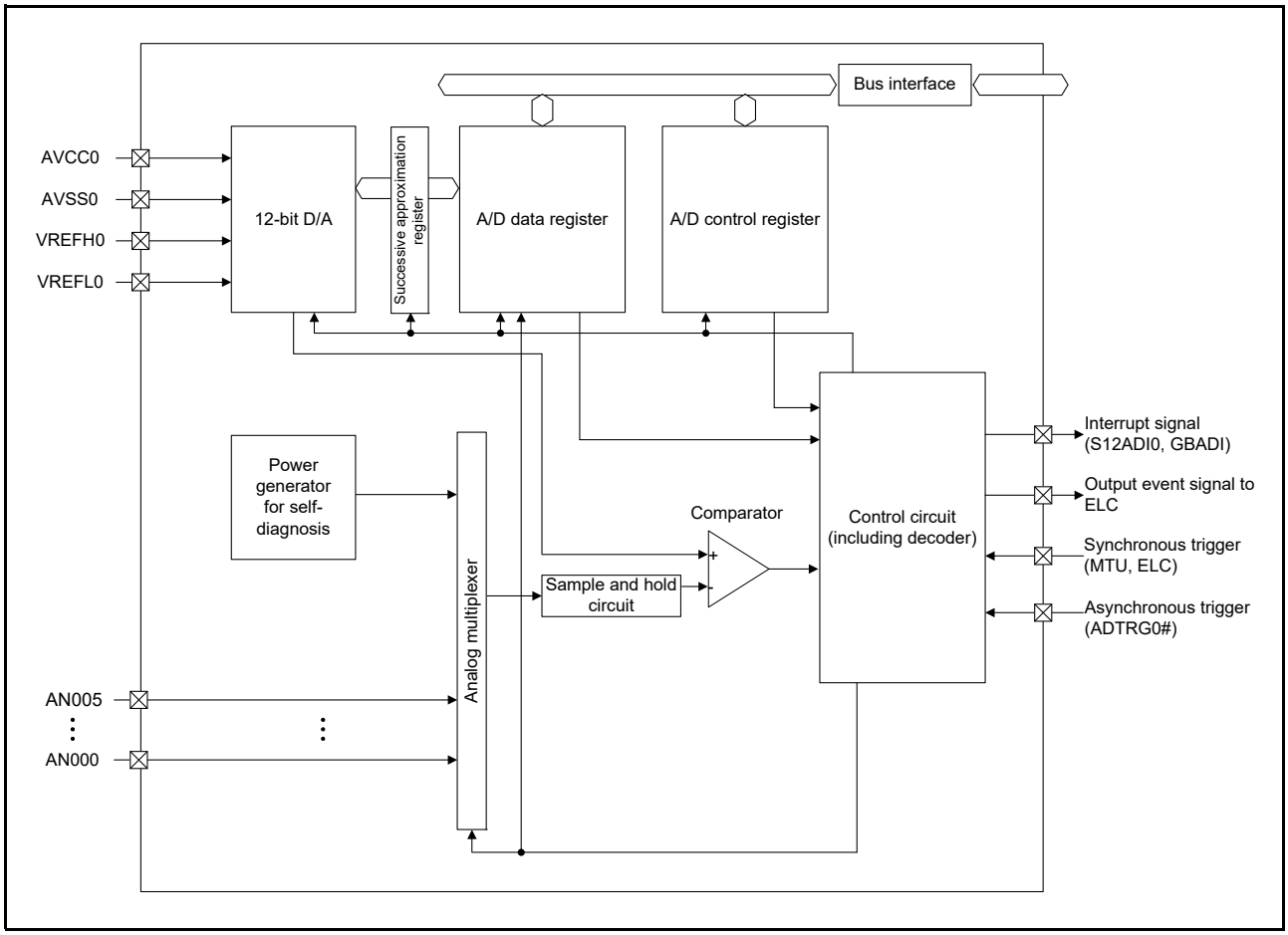

Figure 35.1 Block Diagram of 12-Bit A/D Converter

Table 35.3 lists the input pins of the 12-bit A/D converter.

Table 35.3 Pin Configuration of 12-Bit A/D Converter

Pin Name	I/O	Function
AVCC0	Input	Analog block power supply pin
AVSS0	Input	Analog block ground pin
VREFH0	Input	Reference power supply pin
VREFL0	Input	Reference power supply ground pin
AN000 to AN005	Input	Analog input pins 0 to 5
ADTRG0#	Input	External trigger input pin for starting A/D conversion

35.2 Register Descriptions

35.2.1 A/D Data Registers y (ADDRy) (y = 0 to 5), A/D Data Duplication Register (ADDBLDR)

Address(es): S12AD.ADDR0 0008 9020h, S12AD.ADDR1 0008 9022h, S12AD.ADDR2 0008 9024h, S12AD.ADDR3 0008 9026h, S12AD.ADDR4 0008 9028h, S12AD.ADDR5 0008 902Ah, S12AD.ADDBLDR 0008 9018h

	b15	b14	b13	b12	b11	b10	b9	b8	b7	b6	b5	b4	b3	b2	b1	b0
Value after reset:	0	0	0	0	0	0	0	0	0	0	0	0	0	0	0	0

The ADDRy registers (y = 0 to 5) are 16-bit read-only registers which store the A/D conversion results.
The ADDBLDR register is a 16-bit read-only register used in double trigger mode. The ADDBLDR register stores the results of A/D conversion when the conversion is started by the second trigger.
The format of each register differs depending on the conditions below.

- Settings of the A/D data register format select bit (ADCER.ADRFMT) (flush-right or flush-left)
- Settings of the addition count select bits (ADADC.ADC[2:0]) (addition once, twice, three, or 15 times)
- Settings of the average mode enable bit (ADADC.AVEE) (addition or average)

The data formats for each given condition are shown below.

(1) When A/D-Converted Value Addition/Average Mode is Not Selected

- Flush-right format
  The A/D-converted value is stored in bits 11 to 0. Bits 15 to 12 are read as 0.
- Flush-left format
  The A/D-converted value is stored in bits 15 to 4. Bits 3 to 0 are read as 0.

(2) When A/D-Converted Average Mode is Selected

- Flush-right format
  The mean value of the A/D-converted results of the same channel is stored in bits 11 to 0.
  Bits 15 to 12 are read as 0.
- Flush-left format
  The mean value of the A/D-converted results of the same channel is stored in bits 15 to 4.
  Bits 3 to 0 are read as 0.

A/D-converted value average mode can be set only when twice or four times is selected in A/D-converted value addition mode.

(3) When A/D-Converted Value Addition Mode is Selected

- Flush-right format (A/D-converted value addition mode and 1-time to 4-time conversion selected)
  The value added by the A/D-converted value of the same channel is stored in bits 13 to 0.
  Bits 15 and 14 are read as 0.
- Flush-right format (A/D-converted value addition mode and 16-time conversion selected)
  The value added by the A/D-converted value of the same channel is stored in bits 15 to 0.
- Flush-left format (A/D-converted value addition mode and 1-time to 4-time conversion selected)
  The value added by the A/D-converted value of the same channel is stored in bits 15 to 2.
  Bits 1 and 0 are read as 0.
- Flush-left format (A/D-converted value addition mode and 16-time conversion selected)
  The value added by the A/D-converted value of the same channel is stored in bits 15 to 0.

When A/D-converted addition mode is selected, the value added by the A/D-converted value of the same channel is

indicated. The number of A/D conversions can be set to 1, 2, 3, 4, or 16 times. If A/D-converted addition mode is selected, when the conversion count is set to 1 to 4 times, the value added by the A/D conversion result is retained in the A/D data register as 2-bit extended data of the conversion accuracy bits; when the conversion count is set to 16 times, the value added by the A/D conversion result is retained in the A/D data register as 4-bit extended data of the conversion accuracy bits. Even if A/D-converted value addition mode is selected, the value is stored in the A/D data register according to the settings of the A/D data register format select bits.

35.2.2 A/D Self-Diagnosis Data Register (ADRD)

Address(es): S12AD.ADRD 0008 901Eh

	b15	b14	b13	b12	b11	b10	b9	b8	b7	b6	b5	b4	b3	b2	b1	b0
Value after reset:	0	0	0	0	0	0	0	0	0	0	0	0	0	0	0	0

The ADRD register is a 16-bit read-only register that stores the A/D conversion results based on the 12-bit A/D converter's self-diagnosis. In addition to the A/D-converted value, the self-diagnosis status is included in. In the ADRD register, the different formats are used depending on the conditions below.

- Settings of the A/D data register format select bit (ADCER.ADRFMT) (flush-right or flush-left)

The A/D-converted value addition mode and A/D-converted value average mode cannot be applied to the A/D self-diagnosis function. For details of self-diagnosis, see section 35.2.8, A/D Control Extended Register (ADCER).

The data formats for each given condition are shown below.

- Flush-right format
  The A/D-converted value is stored in bits 11 to 0. The self-diagnosis status is stored in bits 15 and 14.
  Bits 13 and 12 are read as 0.
- Flush-left format
  The A/D-converted value is stored in bits 15 to 4. The self-diagnosis status is stored in bits 1 and 0.
  Bits 3 and 2 are read as 0.

Table 35.4 Self-Diagnosis Status Description

Bits 15 and 14 for flush-right format setting Bits 1 and 0 for flush-left format setting	Self-diagnosis status
00b	Self-diagnosis has never been executed since power-on.
01b	Self-diagnosis using the voltage of 0 V has been executed.
10b	Self-diagnosis using the reference voltage × 1/2 has been executed.
11b	Self-diagnosis using the reference voltage has been executed.

Note: For details of self-diagnosis, see section 35.2.8, A/D Control Extended Register (ADCER).

35.2.3 A/D Control Register (ADCSR)

Address(es): S12AD.ADCSR 0008 9000h

	b15	b14	b13	b12	b11	b10	b9	b8	b7	b6	b5	b4	b3	b2	b1	b0
	ADST	ADCS[1:0]		ADIE	—	ADHSC	TRGE	EXTRG	DBLE	GBADIE	—	DBLANS[4:0]				
Value after reset:	0	0	0	0	0	0	0	0	0	0	0	0	0	0	0	0

Bit	Symbol	Bit Name	Description	R/W
b4 to b0	DBLANS[4:0]	Double Trigger Channel Select	These bits select one analog input channel for double triggered operation. The setting is only effective while double trigger mode is selected.	R/W
b5	—	Reserved	This bit is read as 0. The write value should be 0.	R/W
b6	GBADIE	Group B Scan End Interrupt Enable	0: Disables GBADI interrupt generation upon group B scan completion. 1: Enables GBADI interrupt generation upon group B scan completion.	R/W
b7	DBLE	Double Trigger Mode Select	0: Deselects double trigger mode. 1: Selects double trigger mode.	R/W
b8	EXTRG	Trigger Select *1	0: A/D conversion is started by synchronous trigger. 1: A/D conversion is started by asynchronous trigger.	R/W
b9	TRGE	Trigger Start Enable	0: Disables A/D conversion to be started by synchronous or asynchronous trigger. 1: Enables A/D conversion to be started by synchronous or asynchronous trigger.	R/W
b10	ADHSC	A/D Conversion Select	0: High-speed conversion 1: Low-current conversion	R/W
b11	—	Reserved	This bit is read as 0. The write value should be 0.	R/W
b12	ADIE	Scan End Interrupt Enable	0: Disables S12ADI0 interrupt generation upon scan completion. 1: Enables S12ADI0 interrupt generation upon scan completion.	R/W
b14, b13	ADCS[1:0]	Scan Mode Select	b14 b13 0 0: Single scan mode 0 1: Group scan mode 1 0: Continuous scan mode 1 1: Setting prohibited	R/W
b15	ADST	A/D Conversion Start	0: Stops A/D conversion process. 1: Starts A/D conversion process.	R/W

Note 1. Starting A/D conversion using an external pin (asynchronous trigger)
After a high-level signal is input to the external pin (ADTRG0#), write 1 to both the TRGE and EXTRG bits in ADCSR and change the signals of ADTRG0# to low. Thus the falling edge of ADTRG0# is detected and the scan conversion process is started. In this case, the pulse width of the low-level input must be at least 1.5 clock cycles of PCLKB.

The ADCSR register sets double trigger mode, A/D conversion start trigger; enables/disables scan end interrupt; selects the scan mode; and starts or stops A/D conversion.

DBLANS[4:0] Bits (Double Trigger Channel Select)

The DBLANS[4:0] bits select one of the channels for A/D conversion data duplication in double trigger mode. The A/D conversion results of the analog input of the channel selected by the DBLANS[4:0] bits are stored into the A/D data register y when conversion is started by the first trigger, and into the A/D data duplication register when started by the second trigger. Table 35.5 shows selection of the channel for double triggered operation.
When double trigger mode is selected, channel selection using the ADANSA0 register is invalid, and the channel selected by the DBLANS[4:0] bits is subjected to A/D conversion instead.
When double trigger mode is used, do not select A/D conversion for the self-diagnosis function. The DBLANS[4:0] bits should be set while the ADST bit is 0. They should not be set simultaneously when 1 is written to the ADST bit.
To enter A/D-converted value addition/average mode while double trigger mode is set, the channel selected by the

DBLANS[4:0] bits should be selected in the ADANSA0 register.

Table 35.5 Relationship between DBLANS[4:0] Bits Settings and Double Trigger Enabled Channels

DBLANS[4:0]	Duplication Channel
00000b	AN000
00001b	AN001
00010b	AN002
00011b	AN003
00100b	AN004
00101b	AN005

GBADIE Bit (Group B Scan End Interrupt Enable)

The GBADIE bit enables or disables group B scan end interrupt (GBADI) in group scan mode.

DBLE Bit (Double Trigger Mode Select)

Double trigger mode has a function to store the resulting data of A/D conversion started by the first and second synchronous triggers into separate registers.
When double trigger mode is selected, channel selection using the ADANSA0 register is invalid and the channel selected by the DBLANS[4:0] bits is effective instead. Double trigger mode can be only operated by the synchronous trigger selected by the ADSTRGR.TRSA[5:0] bits. Do not generate an asynchronous or software trigger. The A/D conversion results started by the first trigger are stored into the A/D data register y and those started by the second trigger are stored into the A/D data duplication register. In this case, if the ADIE bit is set to 1, the interrupt is generated not upon completion of the first conversion but upon completion of the second conversion.
In continuous scan mode, double trigger mode should not be selected.
The DBLE bit should be set after the ADST bit has been set to 0.

EXTRG Bit (Trigger Select)

The EXTRG bit selects the synchronous trigger or the asynchronous trigger as the trigger for starting A/D conversion.

TRGE Bit (Trigger Start Enable)

The TRGE bit enables or disables A/D conversion by the synchronous trigger and the asynchronous trigger.
This bit should be set to 1 in group scan mode.

ADHSC Bit (A/D Conversion Select)

The ADHSC bit sets the operating mode of A/D conversion. When modifying this bit, set the 12-bit converter to the standby state. For the procedure for modifying the ADHSC bit, see section 35.8.9, ADHSC Bit Rewriting Procedure.

ADIE Bit (Scan End Interrupt Enable)

The ADIE bit enables or disables the A/D scan end interrupt (S12ADI0) in scans except for group B scan in group scan mode.
With double trigger mode deselected, the S12ADI0 interrupt is generated after the first scan is completed if the ADIE bit is set to 1.
With double trigger mode selected, the S12ADI0 interrupt is generated after the second scan is completed if the ADIE bit is set to 1 as long as the scan is started by the synchronous trigger selected by the ADSTRGR.TRSA[5:0] bits.

ADCS[1:0] Bits (Scan Mode Select)

The ADCS[1:0] bits select the scan mode.

In single scan mode, A/D conversion is performed for the analog inputs of a maximum of 6 channels selected with the ADANSA0 register in the ascending order of the channel number, and when one cycle of A/D conversion is completed for all the selected channels, the scan conversion is stopped.
In continuous scan mode, while the ADCSR.ADST bit is 1, A/D conversion is performed for the analog inputs of a maximum of 6 channels selected with the ADANSA0 register in the ascending order of the channel number, and when one cycle of A/D conversion is completed for all the selected channels, A/D conversion is repeated from the first channel. If the ADCSR.ADST bit is set to 0 during continuous scan, A/D conversion is stopped even if scanning is in progress.
In group scan mode, A/D conversion is performed for the analog inputs (group A) of 6 channels selected with the ADANSA0 register in the ascending order of the channel number after scanning is started by the synchronous trigger selected by the ADSTRGR.TRSA[5:0] bits, and when one cycle of A/D conversion is completed for all the selected channels, A/D conversion is stopped. A/D conversion is also performed for the analog inputs (group B) of a maximum of 6 channels selected with the ADANSB0 register in the ascending order of the channel number after scanning is started by the synchronous trigger selected by the ADSTRGR.TRSB[5:0] bits, and when one cycle of A/D conversion is completed for all the selected channels, A/D conversion is stopped.
When selecting group scan mode, different channels and triggers should be selected for group A and group B.
The ADCS[1:0] bits should be set while the ADST bit is 0. They should not be set simultaneously when 1 is written to the ADST bit.

ADST Bit (A/D Conversion Start)

The ADST bit starts or stops A/D conversion process.
Before the ADST bit is set to 1, set the A/D conversion clock, the conversion mode, and conversion target analog input.
[Setting conditions]

- 1 is written by software.
- The synchronous trigger selected by the ADSTRGR.TRSA[5:0] bits is detected with ADCSR.EXTRG and ADCSR.TRGE bits being set to 0 and 1, respectively.
- The synchronous trigger selected by the ADSTRGR.TRSB[5:0] bits is detected with the ADCSR.TRGE bit being set to 1 in group scan mode.
- The asynchronous trigger is detected with the ADCSR.TRGE and ADCSR.EXTRG bits being set to 1 and the ADSTRGR.TRSA[5:0] bits being set to 000000b.
- With group-A priority control operation mode enabled (ADCSR.ADCS[1:0] bits = 01b and ADGSPCR.PGS bit = 1), a group B trigger is detected and A/D conversion of group B is started.
- With group-A priority control operation mode enabled (ADCSR.ADCS[1:0] bits = 01b and ADGSPCR.PGS bit = 1), the ADGSPCR.GBRSCN bit is set to 1 and A/D conversion of group B is restarted.
- With group-A priority control operation mode enabled (ADCSR.ADCS[1:0] bits = 01b and ADGSPCR.PGS bit = 1), the ADGSPCR.GBRP bit is set to 1 and A/D conversion of group B is started.

[Clearing conditions]

- 0 is written by software.
- The A/D conversion of all the selected channels is completed in single scan mode.
- Group A scan is completed in group scan mode.
- Group B scan is completed in group scan mode.
- With group-A priority control operation mode enabled (ADCSR.ADCS[1:0] bits = 01b and ADGSPCR.PGS bit = 1), a group A trigger is detected during group B A/D conversion and the scanning of group B is stopped.
- With group-A priority control operation mode enabled (ADCSR.ADCS[1:0] bits = 01b and ADGSPCR.PGS bit = 1), the ADGSPCR.GBRSCN bit is set to 1 and the scanning of group B started by a resumption trigger is completed.
- With group-A priority control operation mode enabled (ADCSR.ADCS[1:0] bits = 01b and ADGSPCR.PGS bit = 1) the ADGSPCR.GBRP bit is set to 1 and the scanning of group B by a trigger is completed.

Note: When group-A priority control operation mode has been enabled (ADCSR.ADCS[1:0] bits = 01b and ADGSPCR.PGS bit = 1), do not set the ADST bit to 1.

Note: When group-A priority control operation mode has been enabled (ADCSR.ADCS[1:0] bits = 01b and ADGSPCR.PGS bit = 1) and ADGSPCR.GBRP = 1, do not set the ADST bit to 0. When forcibly terminating A/D conversion, follow the procedure for clearing the ADST bit.

35.2.4 A/D Channel Select Register A0 (ADANSA0)

Address(es): S12AD.ADANSA0 0008 9004h

	b15	b14	b13	b12	b11	b10	b9	b8	b7	b6	b5	b4	b3	b2	b1	b0
	—	—	—	—	—	—	—	—	—	—	ANSA005	ANSA004	ANSA003	ANSA002	ANSA001	ANSA000
Value after reset:	0	0	0	0	0	0	0	0	0	0	0	0	0	0	0	0

Bit	Symbol	Bit Name	Description	R/W
b0	ANSA000	A/D Conversion Channel Select	0: AN000 to AN005 are not subjected to conversion. 1: AN000 to AN005 are subjected to conversion.	R/W
b1	ANSA001			R/W
b2	ANSA002			R/W
b3	ANSA003			R/W
b4	ANSA004			R/W
b5	ANSA005			R/W
b15 to b6	—	Reserved	These bits are read as 0. The write value should be 0.	R/W

The ADANSA0 register selects analog input channels for A/D conversion among AN000 to AN005. In group scan mode, this register selects group A channels.

ANSA0n Bit (n = 00 to 05) (A/D Conversion Channel Select)

The ANSA0n bit selects analog input channels for A/D conversion among AN000 to AN005. The channels to be selected and the number of channels can be arbitrarily set. The ANSA000 bit corresponds to AN000 and the ANSA005 bit corresponds to AN005.

When double trigger mode is selected, the channel selected by the ANSA0n bit is invalid, and the channel selected by the ADCSR.DBLANS[4:0] bits is selected in group A instead.

The ANSA0n bit should be set while the ADCSR.ADST bit is 0.

35.2.5 A/D Channel Select Register B0 (ADANSB0)

Address(es): S12AD.ADANSB0 0008 9014h

	b15	b14	b13	b12	b11	b10	b9	b8	b7	b6	b5	b4	b3	b2	b1	b0
	—	—	—	—	—	—	—	—	—	—	ANSB005	ANSB004	ANSB003	ANSB002	ANSB001	ANSB000
Value after reset:	0	0	0	0	0	0	0	0	0	0	0	0	0	0	0	0

Bit	Symbol	Bit Name	Description	R/W
b0	ANSB000	A/D Conversion Channel Select	0: AN000 to AN005 are not subjected to conversion. 1: AN000 to AN005 are subjected to conversion.	R/W
b1	ANSB001			R/W
b2	ANSB002			R/W
b3	ANSB003			R/W
b4	ANSB004			R/W
b5	ANSB005			R/W
b15 to b6	—	Reserved	These bits are read as 0. The write value should be 0.	R/W

The ADANSB0 register selects analog input channels for A/D conversion among AN000 to AN005 in group B when group scan mode is selected. The ADANSB0 register is not used in any scan mode other than group scan mode.

ANSB0n Bit (n = 00 to 05) (A/D Conversion Channel Select)

The ANSB0n bit selects analog input channels for A/D conversion among AN000 to AN005 in group B when group scan mode is selected. The ADANSB0 register is used for group scan mode only; not used for any other modes. The channels specified in group A (the channels corresponding to group A, selected with the ADANSA0 register and the ADCSR.DBLANS[4:0] bits in double trigger mode) should be excluded as the channels to be selected and the number of channels to be set.

The ANSB000 bit corresponds to AN000 and the ANSB005 bit corresponds to AN005.

The ANSB0n bit should be set while the ADCSR.ADST bit is 0.

35.2.6 A/D-Converted Value Addition/Average Function Select Register 0 (ADADS0)

Address(es): S12AD.ADADS0 0008 9008h

	b15	b14	b13	b12	b11	b10	b9	b8	b7	b6	b5	b4	b3	b2	b1	b0
	—	—	—	—	—	—	—	—	—	—	ADS005	ADS004	ADS003	ADS002	ADS001	ADS000
Value after reset:	0	0	0	0	0	0	0	0	0	0	0	0	0	0	0	0

Bit	Symbol	Bit Name	Description	R/W
b0	ADS000	A/D-Converted Value Addition/ Average Channel Select	0: A/D-converted value addition/average mode for AN000 to AN005 is not selected. 1: A/D-converted value addition/average mode for AN000 to AN005 is selected.	R/W
b1	ADS001			R/W
b2	ADS002			R/W
b3	ADS003			R/W
b4	ADS004			R/W
b5	ADS005			R/W
b15 to b6	—	Reserved	These bits are read as 0. The write value should be 0.	R/W

The ADADS0 register selects the channels 00 to 05 on which A/D conversion is performed successively 2, 3, 4, or 16 times and then converted values are added (integrated) or averaged.

ADS0n Bit (n = 00 to 05) (A/D-Converted Value Addition/Average Channel Select)

When the ADS0n bit of the number that is the same as that of A/D-converted channel selected by the ADANSA0.ANSA0n bit or ADCSR.DBLANS[4:0] bits and ADANSB0.ANSB0n bit is set to 1, A/D conversion of analog input of the selected channels is performed successively 2, 3, 4, or 16 times that is set with the ADADC.ADC[2:0] bits. When the ADADC.AVEE bit is 0, the value obtained by addition (integration) is stored in the A/D data register. When the ADADC.AVEE bit is 1, the mean value of the results obtained by addition (integration) is stored in the A/D data register. As for the channel on which the A/D conversion is performed and addition/average mode is not selected, a normal one-time conversion is executed and the conversion result is stored to the A/D data register. The ADS0n bit should be set while the ADCSR.ADST bit is 0.

Figure 35.2 shows a scanning operation sequence in which both the ADS002 and ADS005 bits are set to 1. It is assumed that addition mode is selected (ADADC.AVEE = 0), the addition count is set to three times (ADADC.ADC[2:0] = 011b), and the channels AN000 to AN005 are selected (ADANSA0.ANSA0n = 3Fh) in continuous scan mode (ADCSR.ADCS[1:0] = 10b). The conversion process begins with AN000. The AN002 conversion is performed successively four times (addition three times), and the added (integrated) value is stored in A/D data register 2. After that the AN003 conversion is started. The AN005 conversion is performed successively 4 times and the added (integrated) value is stored in A/D data register 5. After conversion of AN005, the conversion operation is once again performed in the same sequence from AN000.

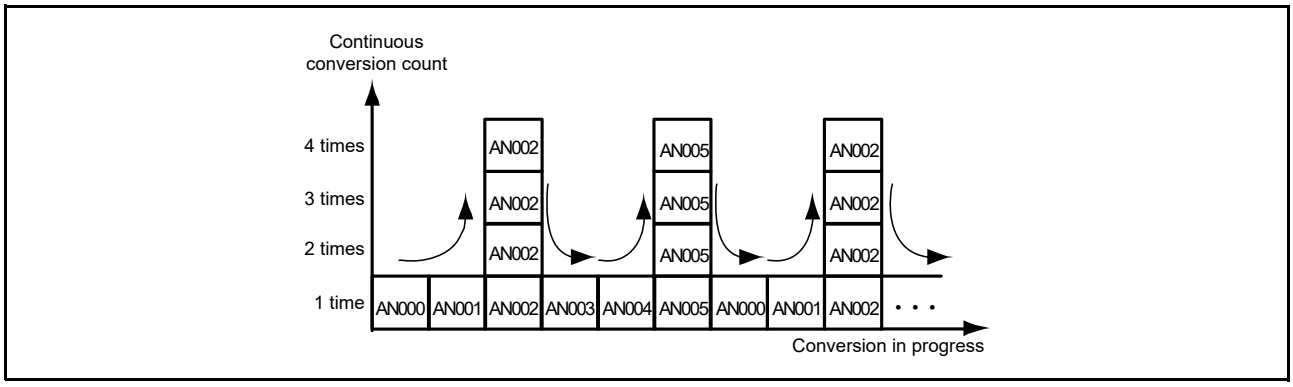

Figure 35.2 Scan Conversion Sequence with ADADC.ADC[2:0] = 011b, ADS002 = 1, and ADS005 = 1

35.2.7 A/D-Converted Value Addition/Average Count Select Register (ADADC)

Address(es): S12AD.ADADC 0008 900Ch

	b7	b6	b5	b4	b3	b2	b1	b0
	AVEE	—	—	—	—	ADC[2:0]		
Value after reset:	0	0	0	0	0	0	0	0

Bit	Symbol	Bit Name	Description	R/W
b2 to b0	ADC[2:0]	Addition Count Select	b2 b0 0 0 0: 1-time conversion (no addition; same as normal conversion) 0 0 1: 2-time conversion (addition once) 0 1 0: 3-time conversion (addition twice)*1 0 1 1: 4-time conversion (addition three times) 1 0 1: 16-time conversion (addition 15 times)*1 Settings other than above are prohibited.	R/W
b6 to b3	—	Reserved	These bits are read as 0. The write value should be 0.	R/W
b7	AVEE	Average Mode Enable	0: Addition mode is selected. 1: Average mode is selected.	R/W

Note 1. The AVEE bit is enabled only when 2-time or 4-time conversion is selected. When average mode is selected (ADADC.AVEE bit = 1), do not set 3-time conversion (ADADC.ADC[2:0] = 010b) nor 16-time conversion (ADADC.ADC[2:0] = 101b).

The ADADC register sets the number of times addition is to proceed for channels selected as being in A/D-converted value addition or average mode, and to select either addition or average mode for them.

ADC[2:0] Bits (Addition Count Select)

The ADC[2:0] bits set the number of times addition is to proceed as a common value for channels for which A/D-converted value addition or average mode is selected, including those channels selected in double trigger mode (by the ADCSR.DBLANS[4:0] bits).
When average mode is selected by setting the ADADC.AVEE bit to 1, do not set the addition count to one time (ADADC.ADC[2:0] = 000b), three times (ADADC.ADC[2:0] = 010b), or 16 times (ADADC.ADC[2:0] = 101b).
The ADC[2:0] bits should be set while the ADCSR.ADST bit is 0.

AVEE Bit (Average Mode Enable)

The AVEE bit selects addition or average mode for the channels selected for which the addition or average mode of A/D conversion is selected, including those channels selected in double trigger mode (by ADCSR.DBLANS[4:0] bits).
When average mode is selected by setting the ADADC.AVEE bit to 1, do not set the addition count to one time (ADADC.ADC[2:0] = 000b), three times (ADADC.ADC[2:0] = 010b), or 16 times (ADADC.ADC[2:0] = 101b). The mean value of 1-time, 3-time, and 16-time conversion cannot be obtained.
The AVEE bit should be set while the ADCSR.ADST bit is 0.

35.2.8 A/D Control Extended Register (ADCER)

Address(es): S12AD.ADCER 0008 900Eh

	b15	b14	b13	b12	b11	b10	b9	b8	b7	b6	b5	b4	b3	b2	b1	b0
	ADRFMT	—	—	—	DIAGM	DIAGLD	DIAGVAL[1:0]		—	—	ACE	—	—	—	—	—
Value after reset:	0	0	0	0	0	0	0	0	0	0	0	0	0	0	0	0

Bit	Symbol	Bit Name	Description	R/W
b4 to b0	—	Reserved	These bits are read as 0. The write value should be 0.	R/W
b5	ACE	A/D Data Register Automatic Clearing Enable	0: Disables automatic clearing. 1: Enables automatic clearing.	R/W
b7, b6	—	Reserved	These bits are read as 0. The write value should be 0.	R/W
b9, b8	DIAGVAL[1:0]	Self-Diagnosis Conversion Voltage Select	b9 b8 0 0: Setting prohibited in self-diagnosis voltage fixed mode 0 1: Uses the voltage of 0 V for self-diagnosis. 1 0: Uses the reference voltage x 1/2 for self-diagnosis.*1 1 1: Uses the reference voltage for self-diagnosis.*1	R/W
b10	DIAGLD	Self-Diagnosis Mode Select	0: Rotation mode for self-diagnosis voltage 1: Fixed mode for self-diagnosis voltage	R/W
b11	DIAGM	Self-Diagnosis Enable	0: Disables self-diagnosis of 12-bit A/D converter. 1: Enables self-diagnosis of 12-bit A/D converter.	R/W
b14 to b12	—	Reserved	These bits are read as 0. The write value should be 0.	R/W
b15	ADRFMT	A/D Data Register Format Select	0: Flush-right is selected for the A/D data register format. 1: Flush-left is selected for the A/D data register format.	R/W

Note 1. The reference voltage refers to the voltage on the pin selected in the ADHVREFCNT register.

The ADCER register sets self-diagnosis mode, format of A/D data registers y (ADDRy), and automatic clearing of A/D data registers.

ACE Bit (A/D Data Register Automatic Clearing Enable)

The ACE bit enables or disables automatic clearing (all “0”) of the ADDRy, ADRD, or ADDBLDR register after any of these registers have been read by the CPU, DTC, or DMACA. Automatic clearing of the A/D data register is enabled to detect a failure which has not been updated in the A/D data register.

DIAGVAL[1:0] Bits (Self-Diagnosis Conversion Voltage Select)

These bits select the voltage value used in self-diagnosis voltage fixed mode. For details, refer to the descriptions of the ADCER.DIAGLD bit.

Self-diagnosis should not be executed by setting the ADCER.DIAGLD bit to 1 when the ADCER.DIAGVAL[1:0] bits are set to 00b.

DIAGLD Bit (Self-Diagnosis Mode Select)

The DIAGLD bit selects whether the three voltage values are rotated or the fixed voltage is used in self-diagnosis. Setting this bit (ADCER.DIAGLD) to 0 allows conversion of the voltages in rotation mode where 0, the reference voltage × 1/2, and the reference voltage are converted in this order. When self-diagnosis rotation mode is selected after a reset, self-diagnosis is performed from 0 V. When self-diagnosis voltage fixed mode is selected, the fixed voltage specified by the ADCER.DIAGVAL[1:0] bits is converted. In self-diagnosis voltage rotation mode, the self-diagnosis voltage value does not return to 0 when scan conversion is completed. When scan conversion is restarted, therefore, rotation starts at the voltage value following the previous value. If fixed mode is switched to rotation mode, rotation starts at the fixed voltage value.

The DIAGLD bit should be set while the ADCSR.ADST bit is 0.

DIAGM Bit (Self-Diagnosis Enable)

The DIAGM bit enables or disables self-diagnosis.
Self-diagnosis is used to detect a failure of the 12-bit A/D converter. Specifically, one of the internally generated voltage values 0, the reference voltage × 1/2, and the reference voltage is converted. When conversion is completed, information on the converted voltage and the conversion result is stored into the self-diagnosis data register (ADRD). The ADRD register can then be read out by software to determine whether the conversion result falls within the normal range (normal) or not (abnormal). Self-diagnosis is executed once at the beginning of each scan, and one of the three voltages is converted. When self-diagnosis is selected in group scan mode, self-diagnosis is separately executed in groups A and B.
The DIAGM bit should be set while the ADCSR.ADST bit is 0.

ADRFMT Bit (A/D Data Register Format Select)

The ADRFMT bit specifies flush-right or flush-left for the data to be stored in the ADDRy, ADRD, or ADDBLDR, ADCMPDR0, ADCMPDR1, ADWINLLB, or ADWINULB register.
The ADRFMT bit should be set while the ADCSR.ADST bit is 0.

For details on the format of each data register, see section 35.2.1, A/D Data Registers y (ADDRy) (y = 0 to 5), A/D Data Duplication Register (ADDBLDR), section 35.2.2, A/D Self-Diagnosis Data Register (ADRD), section 35.2.17, A/D Compare Function Window A Lower-Side Level Setting Register (ADCMPDR0), section 35.2.18, A/D Compare Function Window A Upper-Side Level Setting Register (ADCMPDR1), section 35.2.23, A/D Compare Function Window B Lower-Side Level Setting Register (ADWINLLB), and section 35.2.24, A/D Compare Function Window B Upper-Side Level Setting Register (ADWINULB).

35.2.9 A/D Conversion Start Trigger Select Register (ADSTRGR)

Address(es): S12AD.ADSTRGR 0008 9010h

	b15	b14	b13	b12	b11	b10	b9	b8	b7	b6	b5	b4	b3	b2	b1	b0
	—	—	TRSA[5:0]						—	—	TRSB[5:0]					
Value after reset:	0	0	0	0	0	0	0	0	0	0	0	0	0	0	0	0

Bit	Symbol	Bit Name	Description	R/W
b5 to b0	TRSB[5:0]	A/D Conversion Start Trigger Select for Group B	Select the A/D conversion start trigger for group B in group scan mode.	R/W
b7, b6	—	Reserved	These bits are read as 0. The write value should be 0.	R/W
b13 to b8	TRSA[5:0]	A/D Conversion Start Trigger Select	Select the A/D conversion start trigger in single scan mode and continuous mode. In group scan mode, the A/D conversion start trigger for group A is selected.	R/W
b15, b14	—	Reserved	These bits are read as 0. The write value should be 0.	R/W

The ADSTRGR register selects the A/D conversion start trigger.

TRSB[5:0] Bits (A/D Conversion Start Trigger Select for Group B)

The TRSB[5:0] bits select the trigger to start scanning of the analog input selected in group B. The TRSB[5:0] bits require to be set only in group scan mode and are not used in any other scan mode. For the scan conversion start trigger for group B, setting a software trigger or an asynchronous trigger is prohibited. Therefore, the TRSB[5:0] bits should be set to the value other than 000000b and the ADCSR.TRGE bit should be set to 1 in group scan mode.
When group A is given priority in group scan mode, setting the ADGSPCR.GBRP bit to 1 allows group B to continuously operate in single scan mode. When setting the ADGSPCR.GBRP bit to 1, set the TRSB[5:0] bits to 3Fh.
Note that the issuance period of trigger for A/D conversion must be more than or equal to the actual scan conversion time (t_{SCAN}). If the issuance period is less than t_{SCAN}, A/D conversion by the trigger may have no effect.
When the trigger from the module operated in PCLKA (MTU) is selected as an A/D conversion start trigger, a delay of the period for synchronization processing occurs. See section 35.3.6, Analog Input Sampling Time and Scan Conversion Time for details.
Table 35.6 lists the A/D conversion startup sources selected by the TRSB[5:0] bits.

TRSA[5:0] Bits (A/D Conversion Start Trigger Select)

The TRSA[5:0] bits select the trigger to start A/D conversion in single scan mode and continuous scan mode. In group scan mode, the trigger to start scanning of the analog input selected in group A is selected. When scanning is executed in group scan mode or double trigger mode, software trigger and asynchronous trigger cannot be used.

- When using the A/D conversion startup source of a synchronous trigger, set the ADCSR.TRGE bit to 1 and set the ADCSR.EXTRG bit to 0.
- When using the asynchronous trigger, set the ADCSR.TRGE bit to 1 and set the ADCSR.EXTRG bit to 1.
- Software trigger (ADCSR.ADST) is enabled regardless of the settings of the ADCSR.TRGE bit, the ADCSR.EXTRG bit, and the TRSA[5:0] bits.

Note that the issuance period of trigger for A/D conversion must be more than or equal to the actual scan conversion time (t_{SCAN}). If the issuance period is less than t_{SCAN}, A/D conversion by a trigger may have no effect. When the trigger from the module operated in PCLKA (MTU) is selected as an A/D conversion start trigger, a delay of the period for synchronization processing occurs. See section 35.3.6, Analog Input Sampling Time and Scan Conversion Time for details.

Table 35.7 lists the selection of A/D conversion start sources selected by the TRSA[5:0] bits.

Table 35.6 Selection of A/D Activation Sources by the TRSB[5:0] Bits

Module	Source	Remarks	TRSB [5]	TRSB [4]	TRSB [3]	TRSB [2]	TRSB [1]	TRSB [0]
Trigger source deselection state			1	1	1	1	1	1
MTU	TRG0AN	Compare match/input capture from MTU0.TGRA	0	0	0	0	0	1
	TRG0BN	Compare match/input capture from MTU0.TGRB	0	0	0	0	1	0
	TRGAN	Compare match/input capture from MTU0 to MTU4.TGRA or underflow (trough) of MTU4.TCNT in complementary PWM mode	0	0	0	0	1	1
	TRG0EN	Compare match from MTU0.TGRE	0	0	0	1	0	0
	TRG0FN	Compare match from MTU0.TGRF	0	0	0	1	0	1
	TRG4AN	Compare match between MTU4.TADCORA and MTU4.TCNT (interrupt skipping function)	0	0	0	1	1	0
	TRG4BN	Compare match between MTU4.TADCORB and MTU4.TCNT (interrupt skipping function)	0	0	0	1	1	1
	TRG4ABN	Compare match between MTU4.TADCORA and MTU4.TCNT or compare match between MTU4.TADCORB and MTU4.TCNT (interrupt skipping function)	0	0	1	0	0	0
ELC	ELCTRG00N		0	0	1	0	0	1

Table 35.7 Selection of A/D Activation Sources by the TRSA[5:0] Bits

Module	Source	Remarks	TRSA [5]	TRSA [4]	TRSA [3]	TRSA [2]	TRSA [1]	TRSA [0]
Trigger source deselection state			1	1	1	1	1	1
External pin	ADTRG0#	Input pin for the trigger	0	0	0	0	0	0
MTU	TRG0AN	Compare match/input capture from MTU0.TGRA	0	0	0	0	0	1
	TRG0BN	Compare match/input capture from MTU0.TGRB	0	0	0	0	1	0
	TRGAN	Compare match/input capture from MTU0 to MTU4.TGRA or underflow (trough) of MTU4.TCNT in complementary PWM mode	0	0	0	0	1	1
	TRG0EN	Compare match from MTU0.TGRE	0	0	0	1	0	0
	TRG0FN	Compare match from MTU0.TGRF	0	0	0	1	0	1
	TRG4AN	Compare match between MTU4.TADCORA and MTU4.TCNT (interrupt skipping function)	0	0	0	1	1	0
	TRG4BN	Compare match between MTU4.TADCORB and MTU4.TCNT (interrupt skipping function)	0	0	0	1	1	1
	TRG4ABN	Compare match between MTU4.TADCORA and MTU4.TCNT or compare match between MTU4.TADCORB and MTU4.TCNT (interrupt skipping function)	0	0	1	0	0	0
ELC	ELCTRG00N		0	0	1	0	0	1

35.2.10 A/D Sampling State Register n (ADSSTRn) (n = 0 to 5)

Address(es): S12AD.ADSSTR0 0008 90E0h, S12AD.ADSSTR1 0008 90E1h, S12AD.ADSSTR2 0008 90E2h, S12AD.ADSSTR3 0008 90E3h, S12AD.ADSSTR4 0008 90E4h, S12AD.ADSSTR5 0008 90E5h

	b7	b6	b5	b4	b3	b2	b1	b0
Value after reset:	0	0	0	0	1	1	0	1

The ADSSTRn register sets the sampling time for analog input.
If one state is one ADCLK (A/D conversion clock) cycle and the ADCLK clock is 32 MHz, one state is 31.25 ns. The initial value is 13 states. If the impedance of analog input signal source is too high to secure sufficient sampling time or if the ADCLK clock is slow, the sampling time can be adjusted. The ADSSTRn register should be set while the ADCSR.ADST bit is 0. The lower-limit value for sampling time differs depending on the PCLKB to ADCLK frequency ratio.
Set a value that is 5 states or more when PCLKB to ADCLK frequency ratio = 1:1, 2:1, 4:1, or 8:1.
Set a value that is 6 states or more when PCLKB to ADCLK frequency ratio = 1:2.

Table 35.8 shows the relationship between the A/D sampling state register and the relevant channels.
For details, refer to section 35.3.6, Analog Input Sampling Time and Scan Conversion Time.

Table 35.8 Relationship between A/D Sampling State Register and Relevant Channels

Register Name	Channels
ADSSTR0	AN000
ADSSTR1	AN001
ADSSTR2	AN002
ADSSTR3	AN003
ADSSTR4	AN004
ADSSTR5	AN005

35.2.11 A/D Disconnection Detection Control Register (ADDISCR)

Address(es): S12AD.ADDISCR 0008 907Ah

	b7	b6	b5	b4	b3	b2	b1	b0
	—	—	—	ADNDIS[4:0]				
Value after reset:	0	0	0	0	0	0	0	0

Bit	Symbol	Bit Name	Description	R/W
b4 to b0	ADNDIS[4:0]	A/D Disconnection Detection Assist Setting	b4 ADNDIS[4]: Discharge/precharge selected 0: Discharge 1: Precharge b3 to b0 ADNDIS[3:0]: Discharge/precharge period	R/W
b7 to b5	—	Reserved	These bits are read as 0. The write value should be 0.	R/W

The ADDISCR register sets the disconnection detection assist function.

ADNDIS[4:0] Bits (A/D Disconnection Detection Assist Setting)

These bits select either precharge or discharge and the period of precharge/discharge for the A/D disconnection detection assist function. Setting the ADNDIS[4] bit = 1 allows to select precharge and setting the ADNDIS[4] bit = 0 allows to select discharge. The period of precharge/discharge can be set with the ADNDIS[3:0] bits. When the ADNDIS[3:0] bits = 0000b, the disconnection detection assist function is not effective. Setting of the ADNDIS[3:0] bits to 0001b is prohibited. Except for the case of ADNDIS[3:0] = 0000b or 0001b, the specified value indicates the number of states for the period of precharge/discharge.

35.2.12 A/D Event Link Control Register (ADELCCR)

Address(es): S12AD.ADELCCR 0008 907Dh

	b7	b6	b5	b4	b3	b2	b1	b0
	—	—	—	—	—	—	ELCC[1:0]	
Value after reset:	0	0	0	0	0	0	0	0

Bit	Symbol	Bit Name	Description	R/W
b1, b0	ELCC[1:0]	Event Link Control	b1 b0 0 0: Event is generated on completion of the scan other than group B in group scan mode 0 1: Event is generated on completion of the scan of group B in group scan mode 1 x: Event is generated on completion of all scans	R/W
b7 to b2	—	Reserved	These bits are read as 0. The write value should be 0.	R/W

x: Don't care

The ADELCCR register sets the generation conditions of the ELC scan end event (S12ADELC).

ELCC[1:0] Bits (Event Link Control)

These bits select the generation conditions of the scan end event (S12ADELC) for the ELC.

35.2.13 A/D Group Scan Priority Control Register (ADGSPCR)

Address(es): S12AD.ADGSPCR 0008 9080h

	b15	b14	b13	b12	b11	b10	b9	b8	b7	b6	b5	b4	b3	b2	b1	b0
	GBRP	—	—	—	—	—	—	—	—	—	—	—	—	—	GBRSCN	PGS
Value after reset:	0	0	0	0	0	0	0	0	0	0	0	0	0	0	0	0

Bit	Symbol	Bit Name	Description	R/W
b0	PGS	Group-A Priority Control Setting *1	0: Operation is without group-A priority control 1: Operation is with group-A priority control	R/W
b1	GBRSCN	Group B Restart Setting *2	(Enabled only when PGS = 1. Reserved when PGS = 0.) 0: Scanning for group B is not restarted after having been discontinued due to group-A priority control. 1: Scanning for group B is restarted after having been discontinued due to group-A priority control.	R/W
b14 to b2	—	Reserved	These bits are read as 0. The write value should be 0.	R/W
b15	GBRP	Group B Single Scan Continuous Start *3	(Enabled only when PGS = 1. Reserved when PGS = 0.) 0: Single scan for group B is not continuously activated. 1: Single scan for group B is continuously activated.	R/W

Note 1. When the PGS bit is to be set to 1, the ADCSR.ADCS[1:0] bits must be set to 01b (group scan mode). If the bits are set to any other values, proper operation is not guaranteed.
Note 2. When the GBRSCN bit is to be set to 1, the frequency ratio of peripheral module clock PCLKB to A/D conversion clock ADCLK should be set to 1:1.
Note 3. When the GBRP bit has been set to 1, single scan is performed continuously for group B regardless of the setting of the GBRSCN bit.

The ADGSPCR register is used to make settings for priority control of A/D conversion for group A in group scan mode.

PGS Bit (Group-A Priority Control Setting)

This bit sets the priority of operation on group A. Set this bit to 1 when giving priority to operation on group A.
When the PGS bit is to be set to 1, the ADCSR.ADCS[1:0] bits must be set to 01b (group scan mode).
When setting the PGS bit to 0, clearing should be performed by software according to section 35.8.2, Notes on Stopping A/D Conversion. When setting the PGS bit to 1, follow the procedure described in section 35.3.4.3, Operation under Group-A Priority Control.

GBRSCN Bit (Group B Restart Setting)

This bit controls the restarting of scan operation on group B when operation on group A is given priority.
If a scan operation on group B has been stopped by a group A trigger input with the GBRSCN bit set to 1, the scan operation is restarted on completion of the A/D conversion on group A. Also, if a group B trigger is input during A/D conversion on group A, the scan operation on group B is restarted on completion of the A/D conversion on group A.
If the GBRSCN bit has been set to 0, triggers that are input during A/D conversion are ignored. Also, the ADCSR.ADST bit must be 0 when the GBRSCN bit is to be set.
The setting of the GBRSCN bit is enabled when the PGS bit is set to 1.

GBRP Bit (Group B Single Scan Continuous Start)

This bit is set when a single scan operation is to be performed continuously on group B.
Setting the GBRP bit to 1 starts a single scan on group B. On completion of the scan, another single scan on group B is automatically started. If an A/D conversion on group B has been stopped due to an operation on group A that takes priority, single scan on group B is automatically restarted on completion of the A/D conversion on group A.
Disable group B trigger input before setting the GBRP bit to 1. Setting the GBRP bit to 1 invalidates the setting of the

GBRSCN bit. The ADCSR.ADST bit must be 0 when the GBRP bit is to be set.
The setting of the GBRP bit is enabled when the PGS bit is 1.

35.2.14 A/D Compare Function Control Register (ADCMPCR)

Address(es): S12AD.ADCMPCR 0008 9090h

	b15	b14	b13	b12	b11	b10	b9	b8	b7	b6	b5	b4	b3	b2	b1	b0
	—	WCMPE	—	—	CMPAE	—	CMPBE	—	—	—	—	—	—	—	CMPAB[1:0]	
Value after reset:	0	0	0	0	0	0	0	0	0	0	0	0	0	0	0	0

Bit	Symbol	Bit Name	Description	R/W
b1, b0	CMPAB[1:0]	Window A/B Composite Condition Setting	b1 b0 0 0: S12ADWMELC is output when window A comparison conditions are met OR window B comparison conditions are met. S12ADWUMELC is output in other cases. 0 1: S12ADWMELC is output when window A comparison conditions are met EXOR window B comparison conditions are met. S12ADWUMELC is output in other cases. 1 0: S12ADWMELC is output when window A comparison conditions are met AND window B comparison conditions are met. S12ADWUMELC is output in other cases. 1 1: Setting prohibited.	R/W
b8 to b2	—	Reserved	These bits are read as 0. The write value should be 0.	R/W
b9	CMPBE	Compare Window B Operation Enable	0: Compare window B operation is disabled. S12ADWMELC and S12ADWUMELC outputs are disabled. 1: Compare window B operation is enabled.	R/W
b10	—	Reserved	This bit is read as 0. The write value should be 0.	R/W
b11	CMPAE	Compare Window A Operation Enable	0: Compare window A operation is disabled. S12ADWMELC and S12ADWUMELC outputs are disabled. 1: Compare window A operation is enabled.	R/W
b13, 12	—	Reserved	These bits are read as 0. The write value should be 0.	R/W
b14	WCMPE	Window Function Setting	0: Window function is disabled. Window A and window B operate as a comparator to compare the single value on the lower side with the A/D conversion result. 1: Window function is enabled. Window A and window B operate as a comparator to compare the two values on the upper and lower sides with the A/D conversion result.	R/W
b15	—	Reserved	This bit is read as 0. The write value should be 0.	R/W

The ADCMPCR register sets the compare window A and window B functions.

CMPAB[1:0] Bits (Window A/B Composite Condition Setting)

These bits are valid when both window A and window B are enabled (CMPAE = 1 and CMPBE = 1) in single scan mode. These bits are used to select compare function match/mismatch event output conditions for the ELC or monitoring conditions of the ADWINMON.MONCOMB flag. The CMPAB[1:0] bits should be set while the ADCSR.ADST bit is 0.

CMPBE Bit (Compare Window B Operation Enable)

This bit enables or disables the compare window B operation. The CMPBE bit should be set while the ADCSR.ADST bit is 0.
Set this bit to 0 before setting the following registers.

- A/D channel select registers A0/B0 (ADANSA0, ADANSB0)
- The CMPCHB[5:0] bits in the window B channel select register (ADCMPBNSR.CMPCHB[5:0])

CMPAE Bit (Compare Window A Operation Enable)

This bit enables or disables the compare window A operation. The CMPAE bit should be set while the ADCSR.ADST bit is 0.

Set this bit to 0 before setting the following registers.

- A/D channel select registers A0/B0 (ADANSA0, ADANSB0)
- Window A channel select registers 0 (ADCMPANSR0)

WCMPE Bit (Window Function Setting)

This bit enables or disables the window function. The WCMPE bit should be set while the ADCSR.ADST bit is 0.

35.2.15 A/D Compare Function Window A Channel Select Register 0 (ADCMPANSR0)

Address(es): S12AD.ADCMPANSR0 0008 9094h

	b15	b14	b13	b12	b11	b10	b9	b8	b7	b6	b5	b4	b3	b2	b1	b0
	—	—	—	—	—	—	—	—	—	—	CMPCHA005	CMPCHA004	CMPCHA003	CMPCHA002	CMPCHA001	CMPCHA000
Value after reset:	0	0	0	0	0	0	0	0	0	0	0	0	0	0	0	0

Bit	Symbol	Bit Name	Description	R/W
b0	CMPCHA000	Compare Window A Channel Select	0: The corresponding channel from among AN000 to AN005 is not a target for compare window A. 1: The corresponding channel from among AN000 to AN005 is a target for compare window A.	R/W
b1	CMPCHA001			R/W
b2	CMPCHA002			R/W
b3	CMPCHA003			R/W
b4	CMPCHA004			R/W
b5	CMPCHA005			R/W
b15 to b6	—	Reserved	These bits are read as 0. The write value should be 0.	R/W

The ADCMPANSR0 register is used to select analog input channels for comparison under compare window A conditions from among AN000 to AN005.

CMPCHA0n Bit (n = 00 to 05) (Compare Window A Channel Select)

Setting the CMPCHA0n bit which has the same number as the A/D channel selected by the ADANSA0.ANSA0n or ADANSB0.ANSB0n bit to 1 enables the compare function.
The CMPCHA0n bit should be set while ADCSR.ADST bit is 0.

35.2.16 A/D Compare Function Window A Comparison Condition Setting Register 0 (ADCMPLR0)

Address(es): S12AD.ADCMPLR0 0008 9098h

	b15	b14	b13	b12	b11	b10	b9	b8	b7	b6	b5	b4	b3	b2	b1	b0
	—	—	—	—	—	—	—	—	—	—	CMPLCHA005	CMPLCHA004	CMPLCHA003	CMPLCHA002	CMPLCHA001	CMPLCHA000
Value after reset:	0	0	0	0	0	0	0	0	0	0	0	0	0	0	0	0

Bit	Symbol	Bit Name	Description	R/W
b0	CMPLCHA000	Compare Window A Comparison Condition Select	When the window function is disabled (ADCMPCR.WCMPE bit = 0): 0: ADCMPDR0 register value > A/D-converted value 1: ADCMPDR0 register value < A/D-converted value When the window function is enabled (ADCMPCR.WCMPE bit = 1): 0: A/D-converted value < ADCMPDR0 register value or A/D-converted value > ADCMPDR1 register value 1: ADCMPDR0 register value < A/D-converted value < ADCMPDR1 register value	R/W
b1	CMPLCHA001			R/W
b2	CMPLCHA002			R/W
b3	CMPLCHA003			R/W
b4	CMPLCHA004			R/W
b5	CMPLCHA005			R/W
b15 to b6	—	Reserved	These bits are read as 0. The write value should be 0.	R/W

The ADCMPLR0 register sets the condition for use in comparing the values of the ADCMPDR0 and ADCMPDR1 registers with results of A/D conversion. The ADCMPLR0 register should be set while ADCSR.ADST bit is 0.

CMPLCHA0n Bit (n = 00 to 05) (Compare Window A Comparison Condition Select)

This bit sets the condition for use in comparison with the selected channel from among AN000 to AN005 to which compare window A conditions are applied. A condition can be set for individual comparison of each analog input.
The CMPLCHA000 bit is used for AN000, the CMPLCHA005 bit is used for AN005.
When the result of comparison matches the set condition, the ADCMPSR0.CMPSTCHA0n flag is set to 1.
Figure 35.3 shows the comparison conditions.

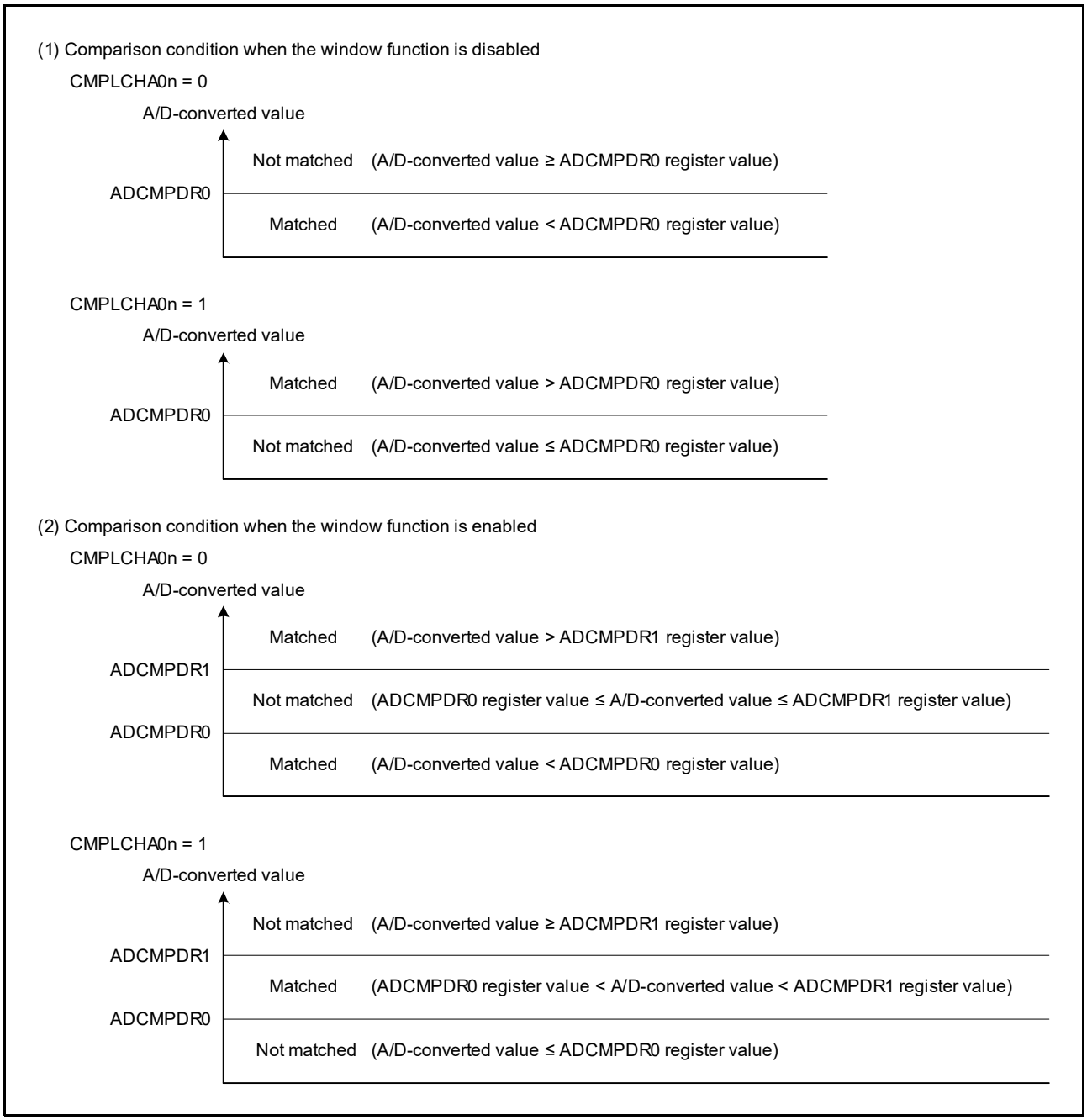

Figure 35.3 Explanation of Compare Function Window A Comparison Conditions

35.2.17 A/D Compare Function Window A Lower-Side Level Setting Register (ADCMPDR0)

Address(es): S12AD.ADCMPDR0 0008 909Ch

	b15	b14	b13	b12	b11	b10	b9	b8	b7	b6	b5	b4	b3	b2	b1	b0
Value after reset:	0	0	0	0	0	0	0	0	0	0	0	0	0	0	0	0

The ADCMPDR0 register is a readable/writable register that sets the reference data when the compare window A function is used. The ADCMPDR0 register sets the lower-side level of window A.
The ADCMPDR0 register is writable even during A/D conversion. The reference data can be dynamically modified by rewriting register values during A/D conversion.
Set the registers so that the upper-side level is not less than the lower-side level (ADCMPDR1 setting value ≥ ADCMPDR0 setting value).

The ADCMPDR0 register uses different formats depending on the following conditions.

- Settings of the A/D data register format select bit (flush-right or flush-left)
- Settings of the A/D-converted value addition/average function select register (A/D-converted value average mode selected or not selected)
- Settings of the A/D-converted value addition/average count select register (addition/average mode selected, addition count selected)

Note: If a format different from the format setting of A/D data register y is used to set the compare value, a correct comparison result will not be obtained.

(1) When A/D-Converted Value Addition/Average Mode is Not Selected

- Flush-right format
  Set bits 11 to 0 to the lower-side comparison level. Write 0 to bits 15 to 12.
- Flush-left format
  Set bits 15 to 4 to the lower-side comparison level. Write 0 to bits 3 to 0.

(2) When A/D-Converted Value Average Mode is Selected

- Flush-right format
  Set bits 11 to 0 to the lower-side comparison level for comparison with the A/D-converted value of the same channel. Write 0 to bits 15 to 12.
- Flush-left format
  Set bits 15 to 4 to the lower-side comparison level for comparison with the A/D-converted value of the same channel. Write 0 to bits 3 to 0.

A/D-converted value average mode can be set only when two or four times is selected in A/D-converted value addition mode.

(3) When A/D-Converted Value Addition Mode is Selected

- Flush-right format (A/D-converted value addition mode and 1-time to 4-time conversion selected)
  Set bits 13 to 0 to the lower-side comparison level for comparison with the A/D-converted value of the same channel. Write 0 to bits 15 and 14.
- Flush-right format (A/D-converted value addition mode and 16-time conversion selected)
  Set bits 15 to 0 to the lower-side comparison level for comparison with the A/D-converted value of the same channel.
- Flush-left format (A/D-converted value addition mode and 1-time to 4-time conversion selected)

Set bits 15 to 2 to the lower-side comparison level for comparison with the A/D-converted value of the same channel. Write 0 to bits 1 and 0.

- Flush-left format (A/D-converted value addition mode and 16-time conversion selected)
  Set bits 15 to 0 to the lower-side comparison level for comparison with the A/D-converted value of the same channel.

When A/D-converted addition mode is selected, set the value added by the A/D-converted value of the same channel. The number of A/D conversions can be set to 1, 2, 3, 4, or 16 times. If A/D-converted addition mode is selected, when the A/D conversion count is set to 1 to 4 times, set the number of conversion accuracy bits extended by 2 bits in the ADCMPDR0 register; when the A/D conversion count is set to 16 times, set the number of conversion accuracy bits extended by 4 bits in the ADCMPDR0 register.
Even if A/D converted value addition mode is selected, set the reference data in the A/D data register according to the settings of the A/D data register format select bits.

35.2.18 A/D Compare Function Window A Upper-Side Level Setting Register (ADCMPDR1)

Address(es): S12AD.ADCMPDR1 0008 909Eh

	b15	b14	b13	b12	b11	b10	b9	b8	b7	b6	b5	b4	b3	b2	b1	b0
Value after reset:	0	0	0	0	0	0	0	0	0	0	0	0	0	0	0	0

The ADCMPDR1 register is a readable/writable register that sets the reference data when the compare window A function is used. The ADCMPDR1 register sets the upper-side level of window A.
The ADCMPDR1 register is writable even during A/D conversion. The reference data can be dynamically modified by rewriting register values during A/D conversion.
Set the registers so that the upper-side level is not less than the lower-side level (ADCMPDR1 setting value ≥ ADCMPDR0 setting value).
The ADCMPDR1 register is not used when the window function is disabled.

The ADCMPDR1 register uses different formats depending on the following conditions.

- Settings of the A/D data register format select bit (flush-right or flush-left)
- Settings of the A/D-converted value addition/average function select register (A/D-converted value average mode selected or not selected)
- Settings of the A/D-converted value addition/average count select register (addition/average mode selected, addition count selected)

Note: If a format different from the format setting of A/D data register y is used to set the compare value, a correct comparison result will not be obtained.

(1) When A/D-Converted Value Addition/Average Mode is Not Selected

- Flush-right format
  Set bits 11 to 0 to the upper-side comparison level. Write 0 to bits 15 to 12.
- Flush-left format
  Set bits 15 to 4 to the upper-side comparison level. Write 0 to bits 3 to 0.

(2) When A/D-Converted Value Average Mode is Selected

- Flush-right format
  Set bits 11 to 0 to the upper-side comparison level for comparison with the A/D-converted value of the same channel. Write 0 to bits 15 to 12.
- Flush-left format
  Set bits 15 to 4 to the upper-side comparison level for comparison with the A/D-converted value of the same channel. Write 0 to bits 3 to 0.

A/D-converted value average mode can be set only when two or four times is selected in A/D-converted value addition mode.

(3) When A/D-Converted Value Addition Mode is Selected

- Flush-right format (A/D-converted value addition mode and 1-time to 4-time conversion selected)
  Set bits 13 to 0 to the upper-side comparison level for comparison with the A/D-converted value of the same channel. Write 0 to bits 15 and 14.
- Flush-right format (A/D-converted value addition mode and 16-time conversion selected)
  Set bits 15 to 0 to the upper-side comparison level for comparison with the A/D-converted value of the same channel.

- Flush-left format (A/D-converted value addition mode and 1-time to 4-time conversion selected)
- Set bits 15 to 2 to the upper-side comparison level for comparison with the A/D-converted value of the same channel. Write 0 to bits 1 and 0.
- Flush-left format (A/D-converted value addition mode and 16-time conversion selected)
  Set bits 15 to 0 to the upper-side comparison level for comparison with the A/D-converted value of the same channel.

When A/D-converted addition mode is selected, set the value added by the A/D-converted value of the same channel. The number of A/D conversions can be set to 1, 2, 3, 4, or 16 times. If A/D-converted addition mode is selected, when the A/D conversion count is set to 1 to 4 times, set the number of conversion accuracy bits extended by 2 bits in the ADCMPDR1 register; when the A/D conversion count is set to 16 times, set the number of conversion accuracy bits extended by 4 bits in the ADCMPDR1 register.
Even if A/D converted value addition mode is selected, set the reference data in the A/D data register according to the settings of the A/D data register format select bits.

35.2.19 A/D Compare Function Window A Channel Status Register 0 (ADCMPSR0)

Address(es): S12AD.ADCMPSR0 0008 90A0h

	b15	b14	b13	b12	b11	b10	b9	b8	b7	b6	b5	b4	b3	b2	b1	b0
	—	—	—	—	—	—	—	—	—	—	CMPSTCHA005	CMPSTCHA004	CMPSTCHA003	CMPSTCHA002	CMPSTCHA001	CMPSTCHA000
Value after reset:	0	0	0	0	0	0	0	0	0	0	0	0	0	0	0	0

Bit	Symbol	Bit Name	Description	R/W
b0	CMPSTCHA000	Compare Window A Flag	When window A operation is enabled (ADCMPCR.CMPAE = 1), these flags indicate the comparison result of channels (AN000 to AN005 to which window A comparison conditions are applied. 0: Comparison conditions are not met. 1: Comparison conditions are met.	R/W
b1	CMPSTCHA001			R/W
b2	CMPSTCHA002			R/W
b3	CMPSTCHA003			R/W
b4	CMPSTCHA004			R/W
b5	CMPSTCHA005			R/W
b15 to b6	—	Reserved	These bits are read as 0. The write value should be 0.	R/W

The ADCMPSR0 register stores the comparison results of the compare window A function.

CMPSTCHA0n Flag (n = 00 to 05) (Compare Window A Flag)

This flag is comparison result status flag of channel (AN000 to AN005) to which window A comparison conditions are applied. When the comparison condition set by the ADCMPLR0.CMPLCHA0n bit is met at the end of A/D conversion, each of these flags is set to 1. The CMPSTCHA000 and CMPSTCHA005 flags correspond to AN000 and AN005, respectively.

Writing 1 to the CMPSTCHA0n flag is disabled.

[Setting condition]

- The condition set by the ADCMPLR0.CMPLCHA0n bit is met when ADCMPCR.CMPAE = 1

[Clearing condition]

- 0 is written after reading 1

35.2.20 A/D High-Potential/Low-Potential Reference Voltage Control Register (ADHVREFCNT)

Address(es): S12AD.ADHVREFCNT 0008 908Ah

	b7	b6	b5	b4	b3	b2	b1	b0
	ADSLP	—	—	LVSEL	—	—	HVSEL[1:0]	
Value after reset:	0	0	0	0	0	0	0	0

Bit	Symbol	Bit Name	Description	R/W
b1, b0	HVSEL[1:0]	High-Potential Reference Voltage Select	b1 b0 0 0: AVCC0 is selected as the high-potential reference voltage. 0 1: VREFH0 is selected as the high-potential reference voltage. Settings other than above are prohibited.	R/W
b3, b2	—	Reserved	These bits are read as 0. The write value should be 0.	R/W
b4	LVSEL	Low-Potential Reference Voltage Select	0: AVSS0 is selected as the low-potential reference voltage. 1: VREFL0 is selected as the low-potential reference voltage.	R/W
b6, b5	—	Reserved	These bits are read as 0. The write value should be 0.	R/W
b7	ADSLP	Sleep	0: Normal operation 1: Standby state	R/W

The ADHVREFCNT register specifies the high-potential and low-potential reference voltages. Set this register before performing A/D conversion.

HVSEL[1:0] Bits (High-Potential Reference Voltage Select)

These bits are used to set the high-potential reference voltage. AVCC0 or VREFH0 is selectable as the high-potential reference voltage.

LVSEL Bit (Low-Potential Reference Voltage Select)

This bit is used to set the low-potential reference voltage. AVSS0 or VREFL0 is selectable as the low-potential reference voltage.

ADSLP Bit (Sleep)

This bit is used to transition the 12-bit A/D converter to the standby state. Set the ADSLP bit to 1 only when modifying the ADCSR.ADHSC bit. In other cases, setting the ADSLP bit to 1 is prohibited.
After the ADSLP bit is set to 1, wait at least 5 µs before clearing this bit to 0. Furthermore, after the ADSLP bit is cleared to 0, wait at least 1 µs and then start the A/D conversion.
For the ADHSC bit rewriting procedure, see section 35.8.9, ADHSC Bit Rewriting Procedure.

35.2.21 A/D Compare Function Window A/B Status Monitor Register (ADWINMON)

Address(es): S12AD.ADWINMON 0008 908Ch

	b7	b6	b5	b4	b3	b2	b1	b0
	—	—	MONCMPB	MONCMPA	—	—	—	MONCOMB
Value after reset:	0	0	0	0	0	0	0	0

Bit	Symbol	Bit Name	Description	R/W
b0	MONCOMB	Combination Result Monitor Flag	This flag indicates the combination result. This flag is valid when both window A operation and window B operation are enabled. 0: Window A/window B composite conditions are not met. 1: Window A/window B composite conditions are met.	R
b3 to b1	—	Reserved	These bits are read as 0. The write value should be 0.	R
b4	MONCMPA	Comparison Result Monitor A Flag	0: Window A comparison conditions are not met. 1: Window A comparison conditions are met.	R
b5	MONCMPB	Comparison Result Monitor B Flag	0: Window B comparison conditions are not met. 1: Window B comparison conditions are met.	R
b7, b6	—	Reserved	These bits are read as 0.	R

The ADWINMON register can monitor the comparison result and the combination result.

MONCOMB Flag (Combination Result Monitor Flag)

This read-only flag indicates the result in combination of comparison condition result A and comparison result condition B with the combination condition set by the ADCMPCR.CMPAB[1:0] bits.

[Setting condition]

- The combined result meets the combination condition set by the ADCMPCR.CMPAB[1:0] bits when ADCMPCR.CMPAE = 1 and ADCMPCR.CMPBE = 1.

[Clearing conditions]

- The combined result does not meet the combination condition set by the ADCMPCR.CMPAB[1:0] bits.
- ADCMPCR.CMPAE = 0 or ADCMPCR.CMPBE = 0.

MONCMPA Flag (Comparison Result Monitor A Flag)

This read-only flag is read as 1 when the A/D-converted value of the window A target channel meets the condition set in the ADCMPLR0 register, and is read as 0 otherwise.

[Setting condition]

- The A/D-converted value meets the condition set by the ADCMPLR0.CMPLCHA0n bit when ADCMPCR.CMPAE = 1.

[Clearing conditions]

- The A/D-converted value does not meet the condition set by the ADCMPLR0.CMPLCHA0n bit when ADCMPCR.CMPAE = 1.
- ADCMPCR.CMPAE = 0 (Automatically cleared when the ADCMPCR.CMPAE bit value changes from 1 to 0.)

MONCMPB Flag (Comparison Result Monitor B Flag)

This read-only flag is read as 1 when the A/D converted value of the window B target channel meets the condition set by the ADCMPBNSR.CMPLB bit, and is read as 0 in other cases.

[Setting condition]

- The A/D-converted value meets the condition set by ADCMPBNSR.CMPLB bit when ADCMPCR.CMPBE = 1.

[Clearing conditions]

- The A/D-converted value does not meet the condition set by ADCMPBNSR.CMPLB bit when ADCMPCR.CMPBE = 1.
- ADCMPCR.CMPBE = 0 (Automatically cleared when the ADCMPCR.CMPBE bit value changes from 1 to 0.)

35.2.22 A/D Compare Function Window B Channel Select Register (ADCMPBNSR)

Address(es): S12AD.ADCMPBNSR 0008 90A6h

	b7	b6	b5	b4	b3	b2	b1	b0
	CMPLB	—	CMPCHB[5:0]					
Value after reset:	0	0	0	0	0	0	0	0

Bit	Symbol	Bit Name	Description	R/W
b5 to b0	CMPCHB[5:0]	Compare Window B Channel Select	These bits select channels to be compared with the compare window B conditions. b5 b0 0 0 0 0 0 0: AN000 0 0 0 0 0 1: AN001 0 0 0 0 1 0: AN002 : : 0 0 0 1 0 1: AN005 Settings other than above are prohibited.	R/W
b6	—	Reserved	This bit is read as 0. The write value should be 0.	R/W
b7	CMPLB	Compare Window B Comparison Condition Setting	When the window function is disabled (ADCMPCR.WCMPE bit = 0) 0: ADWINLLB register value > A/D-converted value 1: ADWINLLB register value < A/D-converted value When the window function is enabled (ADCMPCR.WCMPE bit = 1) 0: A/D-converted value < ADWINLLB register value or ADWINULB register value < A/D-converted value 1: ADWINLLB register value < A/D-converted value < ADWINULB register value	R/W

The ADCMPBNSR register is used to set the compare window B function.

CMPCHB[5:0] Bits (Compare Window B Channel Select)

These bits are used to select channels to be compared from among AN000 to AN005 against the conditions of comparison window B.

The compare window B function is enabled by specifying the hexadecimal number of the A/D conversion channel selected by the ADANSA0 and ADANSB0 registers.

The CMPCHB[5:0] bits should be set while the ADCSR.ADST bit is 0.

CMPLB Bit (Compare Window B Comparison Condition Setting)

This bit is used to set comparison conditions of channels for window B. When the comparison result of each analog input meets the set condition, the ADCMPBSR.CMPSTB flag is set to 1.

Figure 35.4 shows the comparison conditions.

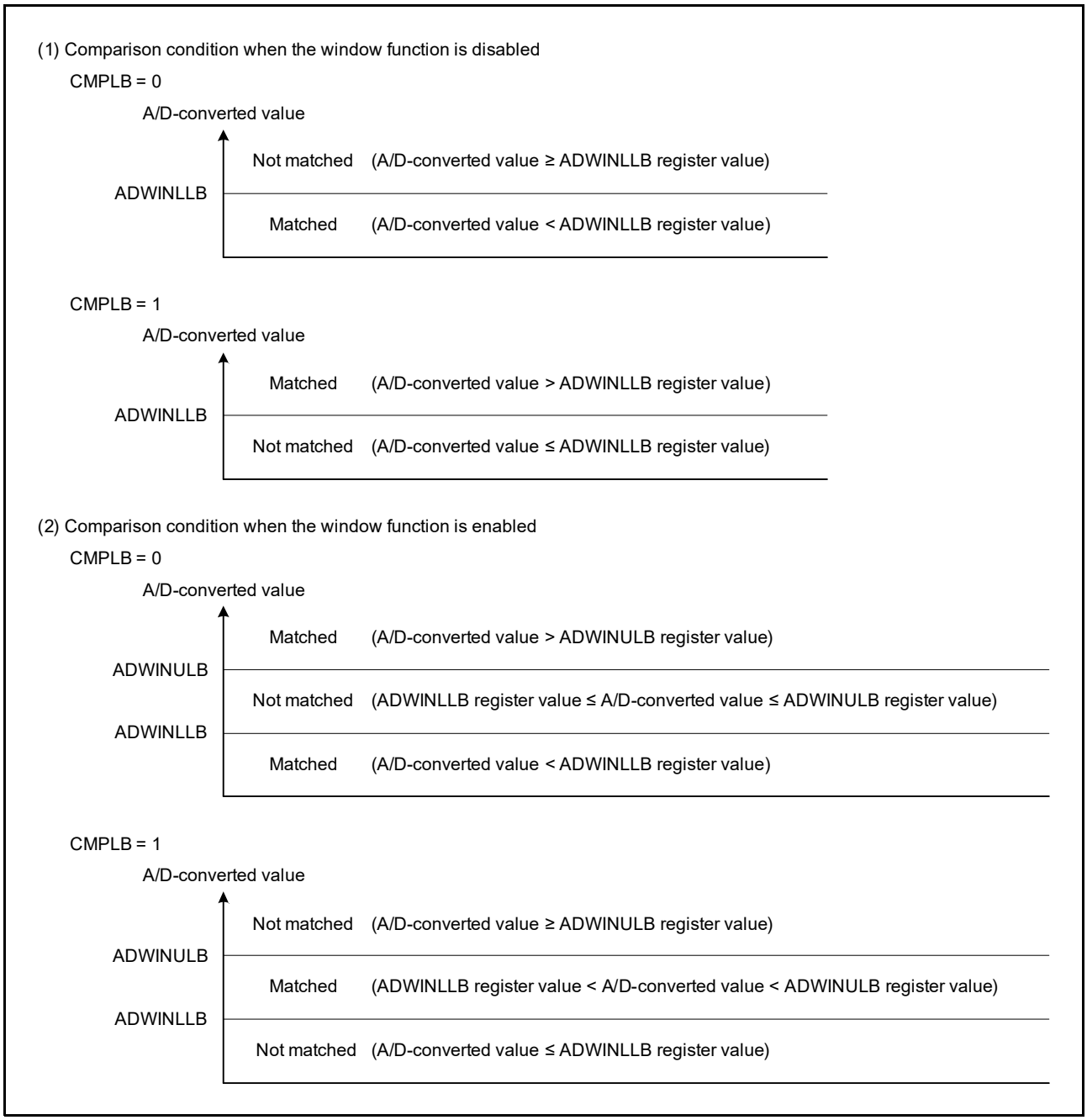

Figure 35.4 Explanation of Compare Function Window B Compare Conditions

35.2.23 A/D Compare Function Window B Lower-Side Level Setting Register (ADWINLLB)

Address(es): S12AD.ADWINLLB 0008 90A8h

	b15	b14	b13	b12	b11	b10	b9	b8	b7	b6	b5	b4	b3	b2	b1	b0
Value after reset:	0	0	0	0	0	0	0	0	0	0	0	0	0	0	0	0

The ADWINLLB register is a readable/writable register that sets the reference data when the compare window B function is used. The ADWINLLB register sets the lower-side level of window B.
The ADWINLLB register is writable even during A/D conversion. The reference data can be dynamically modified by rewriting register values during A/D conversion.
Set the registers so that the upper-side level is not less than the lower-side level (ADWINULB setting value ≥ ADWINLLB setting value).

The ADWINLLB register uses different formats depending on the following conditions.

- Settings of the A/D data register format select bit (flush-right or flush-left)
- Settings of the A/D-converted value addition/average function select register (A/D-converted value average mode selected or not selected)
- Settings of the A/D-converted value addition/average count select register (addition/average mode selected, addition count selected)

Note: If a format different from the format setting of A/D data register y (ADDRy) is used to set the compare value, a correct comparison result will not be obtained.

(1) When A/D-Converted Value Addition/Average Mode is Not Selected

- Flush-right format
  Set bits 11 to 0 to the lower-side comparison level. Write 0 to bits 15 to 12.
- Flush-left format
  Set bits 15 to 4 to the lower-side comparison level. Write 0 to bits 3 to 0.

(2) When A/D-Converted Value Average Mode is Selected

- Flush-right format
  Set bits 11 to 0 to the lower-side comparison level for comparison with the A/D-converted value of the same channel. Write 0 to bits 15 to 12.
- Flush-left format
  Set bits 15 to 4 to the lower-side comparison level for comparison with the A/D-converted value of the same channel. Write 0 to bits 3 to 0.

A/D-converted value average mode can be set only when two or four times is selected in A/D-converted value addition mode.

(3) When A/D-Converted Value Addition Mode is Selected

- Flush-right format (A/D-converted value addition mode and 1-time to 4-time conversion selected)
  Set bits 13 to 0 to the lower-side comparison level for comparison with the A/D-converted value of the same channel. Write 0 to bits 15 and 14.
- Flush-right format (A/D-converted value addition mode and 16-time conversion selected)
  Set bits 15 to 0 to the lower-side comparison level for comparison with the A/D-converted value of the same channel.
- Flush-left format (A/D-converted value addition mode and 1-time to 4-time conversion selected)

Set bits 15 to 2 to the lower-side comparison level for comparison with the A/D-converted value of the same channel. Write 0 to bits 1 and 0.

- Flush-left format (A/D-converted value addition mode and 16-time conversion selected)
  Set bits 15 to 0 to the lower-side comparison level for comparison with the A/D-converted value of the same channel.

When A/D-converted addition mode is selected, set the value added by the A/D-converted value of the same channel. The number of A/D conversions can be set to 1, 2, 3, 4, or 16 times. If A/D-converted addition mode is selected, when the A/D conversion count is set to 1 to 4 times, set the number of conversion accuracy bits extended by 2 bits in the ADWINLLB register; when the A/D conversion count is set to 16 times, set the number of conversion accuracy bits extended by 4 bits in the ADWINLLB register.
Even if A/D converted value addition mode is selected, set the reference data in the A/D data register according to the settings of the A/D data register format select bits.

35.2.24 A/D Compare Function Window B Upper-Side Level Setting Register (ADWINULB)

Address(es): S12AD.ADWINULB 0008 90AAh

	b15	b14	b13	b12	b11	b10	b9	b8	b7	b6	b5	b4	b3	b2	b1	b0
Value after reset:	0	0	0	0	0	0	0	0	0	0	0	0	0	0	0	0

The ADWINULB register is a readable/writable register that sets the reference data when the compare window B function is used. The ADWINULB register sets the upper-side level of window B.
The ADWINULB register is writable even during A/D conversion. The reference data can be dynamically modified by rewriting register values during A/D conversion.
Set the registers so that the upper-side level is not less than the lower-side level (ADWINULB setting value ≥ ADWINLLB setting value)
The ADWINULB register is not used when the window function is disabled.

The ADWINULB register uses different formats depending on the following conditions.

- Settings of the A/D data register format select bit (flush-right or flush-left)
- Settings of the A/D-converted value addition/average function select register (A/D-converted value average mode selected or not selected)
- Settings of the A/D-converted value addition/average count select register (addition/average mode selected, addition count selected)

Note: If a format different from the format setting of A/D data register y (ADDRy) is used to set the compare value, a correct comparison result will not be obtained.

(1) When A/D-Converted Value Addition/Average Mode is Not Selected

- Flush-right format
  Set bits 11 to 0 to the upper-side comparison level. Write 0 to bits 15 to 12.
- Flush-left format
  Set bits 15 to 4 to the upper-side comparison level. Write 0 to bits 3 to 0.

(2) When A/D-Converted Value Average Mode is Selected

- Flush-right format
  Set bits 11 to 0 to the upper-side comparison level for comparison with the A/D-converted value of the same channel. Write 0 to bits 15 to 12.
- Flush-left format
  Set bits 15 to 4 to the upper-side comparison level for comparison with the A/D-converted value of the same channel. Write 0 to bits 3 to 0.

A/D-converted value average mode can be set only when two or four times is selected in A/D-converted value addition mode.

(3) When A/D-Converted Value Addition Mode is Selected

- Flush-right format (A/D-converted value addition mode and 1-time to 4-time conversion selected)
  Set bits 13 to 0 to the upper-side comparison level for comparison with the A/D-converted value of the same channel. Write 0 to bits 15 and 14.
- Flush-right format (A/D-converted value addition mode and 16-time conversion selected)
  Set bits 15 to 0 to the upper-side comparison level for comparison with the A/D-converted value of the same channel.

- Flush-left format (A/D-converted value addition mode and 1-time to 4-time conversion selected)
  Set bits 15 to 2 to the upper-side comparison level for comparison with the A/D-converted value of the same channel. Write 0 to bits 1 and 0.
- Flush-left format (A/D-converted value addition mode and 16-time conversion selected)
  Set bits 15 to 0 to the upper-side comparison level for comparison with the A/D-converted value of the same channel.

When A/D-converted addition mode is selected, set the value added by the A/D-converted value of the same channel. The number of A/D conversions can be set to 1, 2, 3, 4, or 16 times. If A/D-converted addition mode is selected, when the A/D conversion count is set to 1 to 4 times, set the number of conversion accuracy bits extended by 2 bits in the ADWINULB register; when the A/D conversion count is set to 16 times, set the number of conversion accuracy bits extended by 4 bits in the ADWINULB register.
Even if A/D converted value addition mode is selected, set the reference data in the A/D data register according to the settings of the A/D data register format select bits.

35.2.25 A/D Compare Function Window B Channel Status Register (ADCMPBSR)

Address(es): S12AD.ADCMPBSR 0008 90ACh

	b7	b6	b5	b4	b3	b2	b1	b0
	—	—	—	—	—	—	—	CMPSTB
Value after reset:	0	0	0	0	0	0	0	0

Bit	Symbol	Bit Name	Description	R/W
b0	CMPSTB	Compare Window B Flag	0: Comparison conditions are not met. 1: Comparison conditions are met.	R/W
b7 to b1	—	Reserved	These bits are read as 0. The write value should be 0.	R/W

The ADCMPBSR register stores the comparison result of the compare window B function.

CMPSTB Flag (Compare Window B Flag)

This flag is a status flag that indicates the results of comparison for the channels (AN000 to AN005) to which the window B comparison conditions are applied.
When the comparison condition set by ADCMPBNSR.CMPCHB[5:0] bits is met at the end of A/D conversion, this flag is set to 1.
Writing 1 to the CMPSTB flag is disabled.
[Setting condition]

- The condition set by ADCMPBNSR.CMPLB bit is met when ADCMPCR.CMPAE = 1

[Clearing condition]

- 0 is written after reading 1

35.2.26 A/D Data Storage Buffer Register n (ADBUFn) (n = 0 to 15)

Address(es): S12AD.ADBUF0 0008 90B0h, S12AD.ADBUF1 0008 90B2h, S12AD.ADBUF2 0008 90B4h, S12AD.ADBUF3 0008 90B6h, S12AD.ADBUF4 0008 90B8h, S12AD.ADBUF5 0008 90BAh, S12AD.ADBUF6 0008 90BCh, S12AD.ADBUF7 0008 90BEh, S12AD.ADBUF8 0008 90C0h, S12AD.ADBUF9 0008 90C2h, S12AD.ADBUF10 0008 90C4h, S12AD.ADBUF11 0008 90C6h, S12AD.ADBUF12 0008 90C8h, S12AD.ADBUF13 0008 90CAh, S12AD.ADBUF14 0008 90CCh, S12AD.ADBUF15 0008 90CEh

	b15	b14	b13	b12	b11	b10	b9	b8	b7	b6	b5	b4	b3	b2	b1	b0
Value after reset:	0	0	0	0	0	0	0	0	0	0	0	0	0	0	0	0

A/D data storage buffer registers n (ADBUFn) are 16-bit read-only registers that sequentially store all A/D converted values. The automatic clear function is not applied to these registers.

The ADBUFn register uses different formats depending on the following conditions.

- Settings of the A/D data register format select bit (flush-right or flush-left)
- Settings of the A/D-converted value addition/average function select register (A/D-converted value average mode selected or not selected)
- Settings of the A/D-converted value addition/average count select register (addition/average mode selected, addition count selected)

(1) When A/D-Converted Value Addition/Average Mode is Not Selected

- Flush-right format
  The A/D-converted value is stored in bits 11 to 0. Bits 15 to 12 are read as 0.
- Flush-left format
  The A/D-converted value is stored in bits 15 to 4. Bits 3 to 0 are read as 0.

(2) When A/D-Converted Value Average Mode is Selected

- Flush-right format
  The mean value of the A/D converted results of the same channel is stored in bits 11 to 0. Bits 15 to 12 are read as 0.
- Flush-left format
  The mean value of the A/D converted results of the same channel is stored in bits 15 to 4. Bits 3 to 0 are read as 0.

A/D-converted value average mode can be set only when two or four times is selected in A/D-converted value addition mode.

(3) When A/D-Converted Value Addition Mode is Selected

- Flush-right format (A/D-converted value addition mode and 1-time to 4-time conversion selected)
  The value added by the A/D-converted value of the same channel is stored in bits 13 to 0.
  Bits 15 and 14 are read as 0.
- Flush-right format (A/D-converted value addition mode and 16-time conversion selected)
  The value added by the A/D-converted value of the same channel is stored in bits 15 to 0.
- Flush-left format (A/D-converted value addition mode and 1-time to 4-time conversion selected)
  The value added by the A/D-converted value of the same channel is stored in bits 15 to 2.
  Bits 1 and 0 are read as 0.
- Flush-left format (A/D-converted value addition mode and 16-time conversion selected)
  The value added by the A/D-converted value of the same channel is stored in bits 15 to 0.

When A/D-converted addition mode is selected, the value added by the A/D-converted value of the same channel is indicated. The number of A/D conversion can be set to 1, 2, 3, 4, or 16 times. If A/D-converted addition mode is selected, when the conversion count is set to 1 to 4 times, the value added by the A/D conversion result is retained in the ADBUFn register as 2-bit extended data of the conversion accuracy bits: when the conversion count is set to 16 times, the value

added by the A/D conversion result is retained in the ADBUFn register as 4-bit extended data of the conversion accuracy bits.
Even if A/D-converted value addition mode is selected, the extended A/D-converted value is stored in the ADBUFn register according to the settings of the A/D data register format select bits.

35.2.27 A/D Data Storage Buffer Enable Register (ADBUFEN)

Address(es): S12AD.ADBUFEN 0008 90D0h

	b7	b6	b5	b4	b3	b2	b1	b0
	—	—	—	—	—	—	—	BUFEN
Value after reset:	0	0	0	0	0	0	0	0

Bit	Symbol	Bit Name	Description	R/W
b0	BUFEN	Data Storage Buffer Enable	0: The data storage buffer is not used. 1: The data storage buffer is used.	R/W
b7 to b1	—	Reserved	These bits are read as 0. The write value should be 0.	R/W

The ADBUFEN register is used to enable the data storage buffer.

BUFEN Bit (Data Storage Buffer Enable)

This bit enables the use of the data storage buffer when using the compare function.
When BUFEN = 1, A/D conversion result (addition result) other than self-diagnosis result is stored in ADBUFn.
Disable the data storage operation (BUFEN = 0) before reading ADBUFn and ADBUFPTR.
Do not use the data storage buffer for data duplexing, continuous scan, or group scan.

35.2.28 A/D Data Storage Buffer Pointer Register (ADBUFPTR)

Address(es): S12AD.ADBUFPTR 0008 90D2h

	b7	b6	b5	b4	b3	b2	b1	b0
	—	—	—	PTROVF	BUFPTR[3:0]			
Value after reset:	0	0	0	0	0	0	0	0

Bit	Symbol	Bit Name	Description	R/W
b3 to b0	BUFPTR[3:0]	Data Storage Buffer Pointer	These bits indicate the number of data storage buffer to which the next A/D conversion data is transferred.	R/W
b4	PTROVF	Pointer Overflow Flag	0: The data storage buffer pointer has not overflowed. 1: The data storage buffer pointer has overflowed.	R/W
b7 to b5	—	Reserved	These bits are read as 0. The write value should be 0.	R/W

The ADBUFPTR register is used for the data storage buffer pointer.

BUFPTR[3:0] Bits (Data Storage Buffer Pointer)

These read-only bits indicate the number of data storage buffer to which the next A/D conversion data is transferred. When data has been transferred to data storage buffer 15, the pointer value becomes 0000b and the PTROVF flag is set to 1. When the next data has been transferred, the data in data storage buffer 0 is overwritten.
Writing 00h to this register clears the value of these bits. Writing a value other than 00h is disabled.

PTROVF Flag (Pointer Overflow Flag)

This read-only flag indicates whether the data storage buffer pointer has overflowed. This flag is set to 1 when the pointer value becomes 0000b (overflow).
Writing 00h to this register clears this flag value. Writing a value other than 00h is disabled.

35.3 Operation

35.3.1 Scanning Operation

In scanning, A/D conversion is performed sequentially on the analog inputs of the specified channels.
A scan conversion is performed in three operating modes: single scan mode, continuous scan mode, and group scan mode. Also, conversion modes are divided into high-speed conversion mode and normal conversion mode. In single scan mode, one or more specified channels are scanned once. In continuous scan mode, one or more specified channels are scanned repeatedly until the ADCSR.ADST bit is cleared to 0 from 1 by software. In group scan mode, the selected channels of group A and the selected channels of group B are scanned once after starting to be scanned according to the respective synchronous trigger.
In single scan mode and continuous scan mode, A/D conversion is performed for ANn channels selected by the ADANSA0 register, starting from the channel with the smallest number n. In group scan mode, A/D conversion is performed for ANn channels of group A and group B selected by the ADANSA0 and ADANSB0 registers, respectively, starting from the channel with the smallest number n.
When self-diagnosis is selected, it is executed once at the beginning of each scan and one of the three voltages internally generated in the 12-bit A/D converter is converted.
Double trigger mode is to be used with single scan mode or group scan mode. With double trigger mode being enabled, A/D conversion data of a channel selected by the ADCSR.DBLANS[4:0] bits is duplicated only if the conversion is started by the synchronous trigger selected by the ADSTRGR.TRSA[5:0] bits.

35.3.2 Single Scan Mode

35.3.2.1 Basic Operation

In basic operation of single scan mode, A/D conversion is performed once on the analog input of the specified channels as below.

(1) When the ADCSR.ADST bit is set to 1 (A/D conversion start) by software, synchronous trigger, or asynchronous trigger input, A/D conversion is performed for ANn channels selected by the ADANSA0 register, starting from the channel with the smallest number n.
(2) Each time A/D conversion of a single channel is completed, the A/D conversion result is stored into the corresponding A/D data register (ADDRy).
(3) When A/D conversion of all the selected channels is completed, an S12ADI0 interrupt request is generated if the ADCSR.ADIE bit is 1 (S12ADI0 interrupt upon scanning completion enabled).
(4) The ADST bit remains 1 (A/D conversion start) during A/D conversion, and is automatically cleared to 0 when A/D conversion of all the selected channels is completed. Then the 12-bit A/D converter enters a wait state.

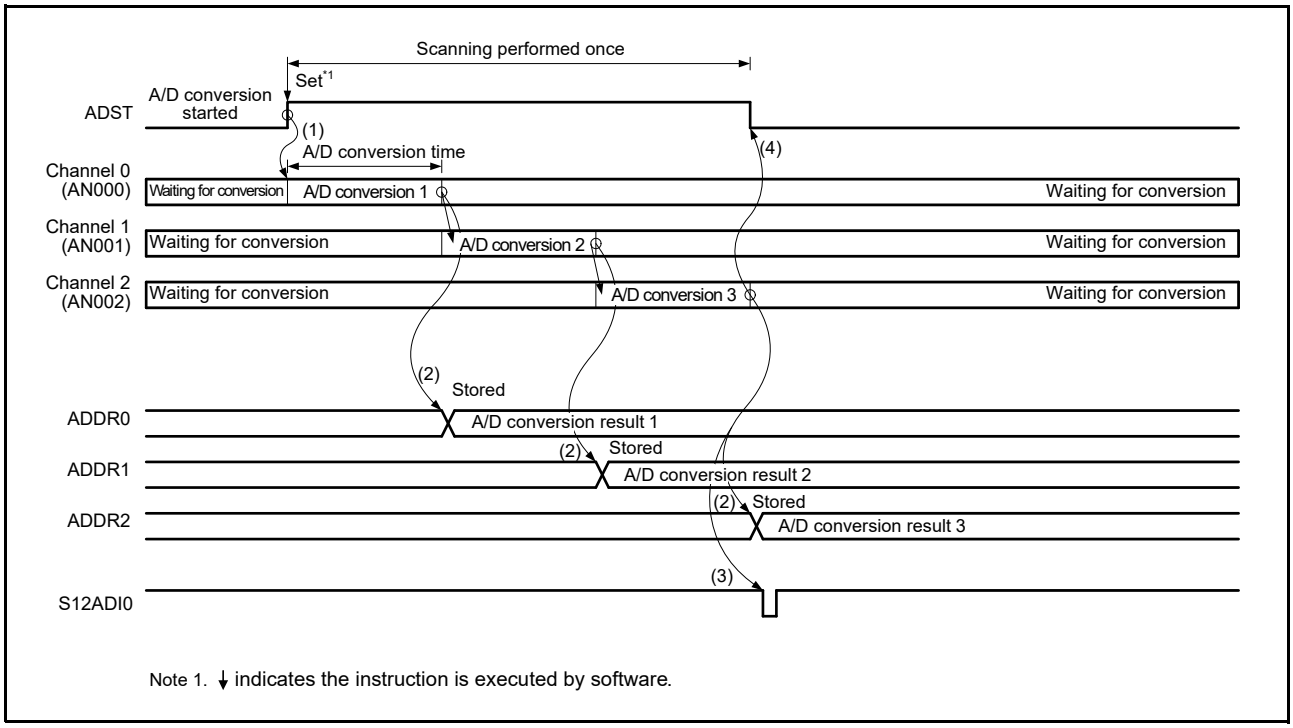

Figure 35.5 Example of Operation in Single Scan Mode (Basic Operation: AN000, AN001, AN002 Selected)

35.3.2.2 Channel Selection and Self-Diagnosis

When channels and self-diagnosis are selected, A/D conversion is performed once for the reference voltage VREFH0 supplied to the 12-bit A/D converter as below. After that, A/D conversion is performed only once on the analog input of the selected channels.

(1) A/D conversion for self-diagnosis is started when the ADCSR.ADST bit is set to 1 (A/D conversion start) by software, synchronous trigger, or asynchronous trigger input.
(2) When A/D conversion for self-diagnosis is completed, A/D conversion result is stored into the A/D self-diagnosis data register (ADRD), and A/D conversion is performed for ANn channels selected by the ADANSA0 register, starting from the channel with the smallest number n.
(3) Each time A/D conversion of a single channel is completed, the A/D conversion result is stored into the corresponding A/D data register (ADDRy).
(4) When A/D conversion of all the selected channels is completed, an S12ADI0 interrupt request is generated if the ADCSR.ADIE bit is 1 (S12ADI0 interrupt upon scanning completion enabled).
(5) The ADST bit remains 1 (A/D conversion start) during A/D conversion, and is automatically cleared to 0 when A/D conversion of all the selected channels is completed. Then the 12-bit A/D converter enters a wait state.

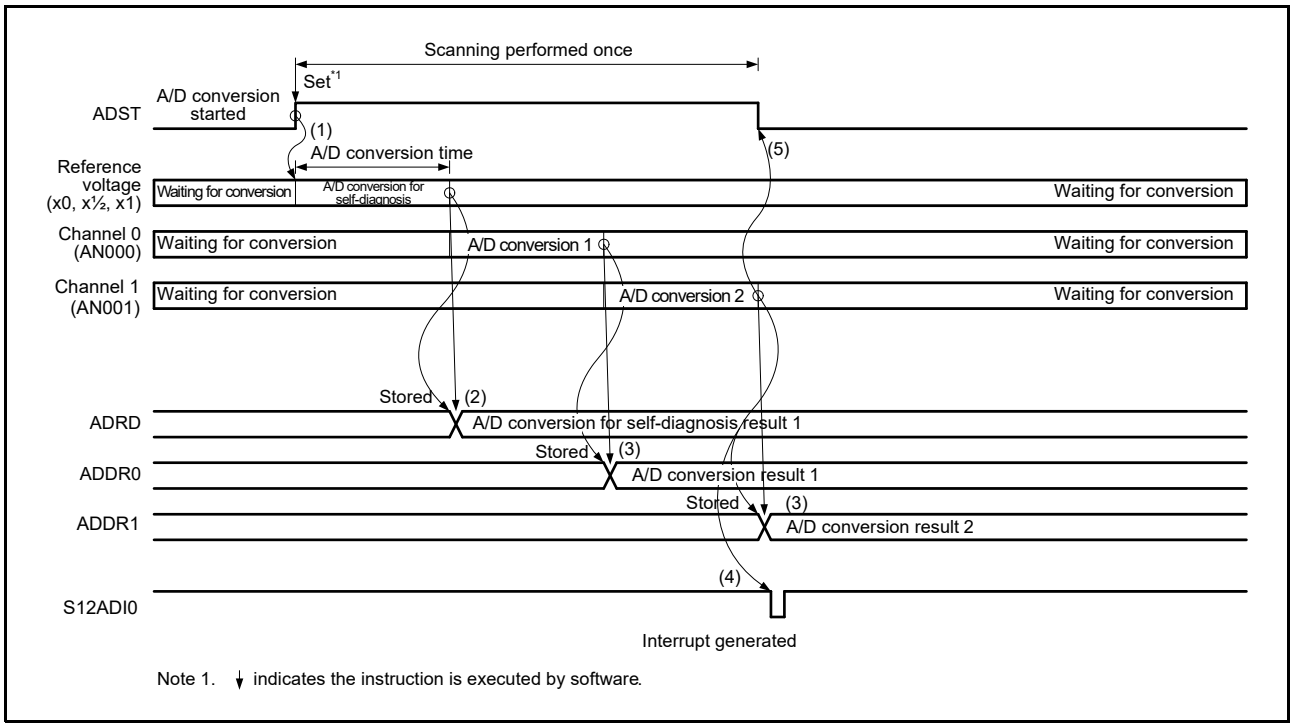

Figure 35.6 Example of Operation in Single Scan Mode (Basic Operation: AN000, AN001 Selected + Self-Diagnosis)

35.3.2.3 A/D Conversion in Double Trigger Mode

In single scan mode with double trigger mode, single scan operation started by synchronous trigger is performed twice as below.

Self-diagnosis should be deselected.

Duplication of A/D conversion data is enabled by setting the channel numbers to be duplicated to the ADCSR.DBLANS[4:0] bits and setting the ADCSR.DBLE bit to 1. When the DBLE bit in ADCSR is set to 1, channel selection using the ADANSA0 register is invalid. In double trigger mode, synchronous triggers should be selected using the ADSTRGR.TRSA[5:0] bits, the ADCSR.EXTRG bit should be set to 0, and the ADCSR.TRGE bit should be set to 1. Software trigger should not be used.

(1) When the ADCSR.ADST bit is set to 1 (A/D conversion start) by synchronous trigger input, A/D conversion is started on the single channel selected by the ADCSR.DBLANS[4:0] bits.
(2) When A/D conversion is completed, the A/D conversion result is stored into the corresponding A/D data register (ADDRy).
(3) The ADST bit is automatically cleared to 0 and the 12-bit A/D converter enters a wait state. Here, an S12ADI0 interrupt request is not generated irrespective of the ADCSR.ADIE bit setting (S12ADI0 interrupt upon scanning completion enabled).
(4) When the ADCSR.ADST bit is set to 1 (A/D conversion start) by the second trigger input, A/D conversion is started on the single channel selected by the ADCSR.DBLANS[4:0] bits.
(5) When A/D conversion is completed, the A/D conversion result is stored into the A/D data duplication register (ADDBLDR), which is exclusively used in double trigger mode.
(6) If the ADCSR.ADIE bit is 1 (S12ADI0 interrupt upon scanning completion enabled), an S12ADI0 interrupt request is generated.
(7) The ADST bit remains 1 (A/D conversion start) during A/D conversion, and is automatically cleared to 0 when A/D conversion is completed. Then the 12-bit A/D converter enters a wait state.

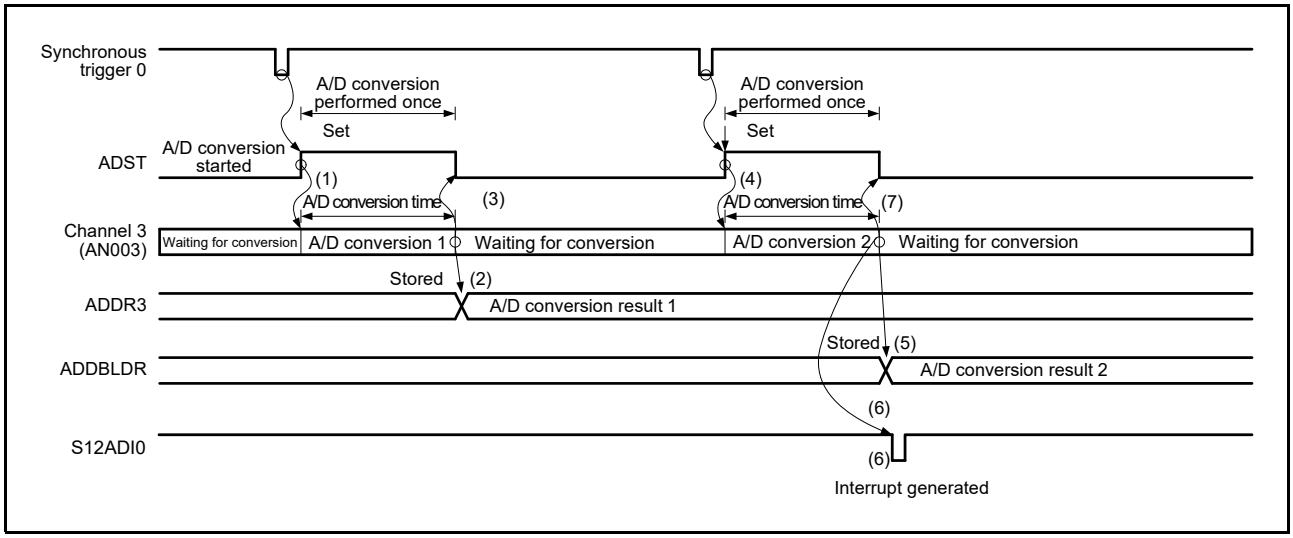

Figure 35.7 Example of Operation in Single Scan Mode (Double Trigger Mode Selected; AN003 Duplicated)

35.3.3 Continuous Scan Mode

35.3.3.1 Basic Operation

In basic operation of continuous scan mode, A/D conversion is performed repeatedly on the analog input of the specified channels as below.

(1) When the ADCSR.ADST bit is set to 1 (A/D conversion start) by software, synchronous trigger, or asynchronous trigger input, A/D conversion is performed for ANn channels selected by the ADANSA0 register, starting from the channel with the smallest number n.

(2) Each time A/D conversion of a single channel is completed, the A/D conversion result is stored into the corresponding A/D data register (ADDRy).

(3) When A/D conversion of all the selected channels is completed, an S12ADI0 interrupt request is generated if the ADCSR.ADIE bit is 1 (S12ADI0 interrupt upon scanning completion enabled).
The 12-bit A/D converter sequentially starts A/D conversion for ANn channels selected by the ADANSA0 register, starting from the channel with the smallest number n.

(4) The ADCSR.ADST bit is not automatically cleared to 0 and steps 2 and 3 are repeated as long as the bit remains 1 (A/D conversion start). When the ADCSR.ADST bit is set to 0 (A/D conversion stop), A/D conversion stops and the 12-bit A/D converter enters a wait state.

(5) When the ADST bit is later set to 1 (A/D conversion start), A/D conversion is started again for ANn channels selected by the ADANSA0 register, starting from the channel with the smallest number n.

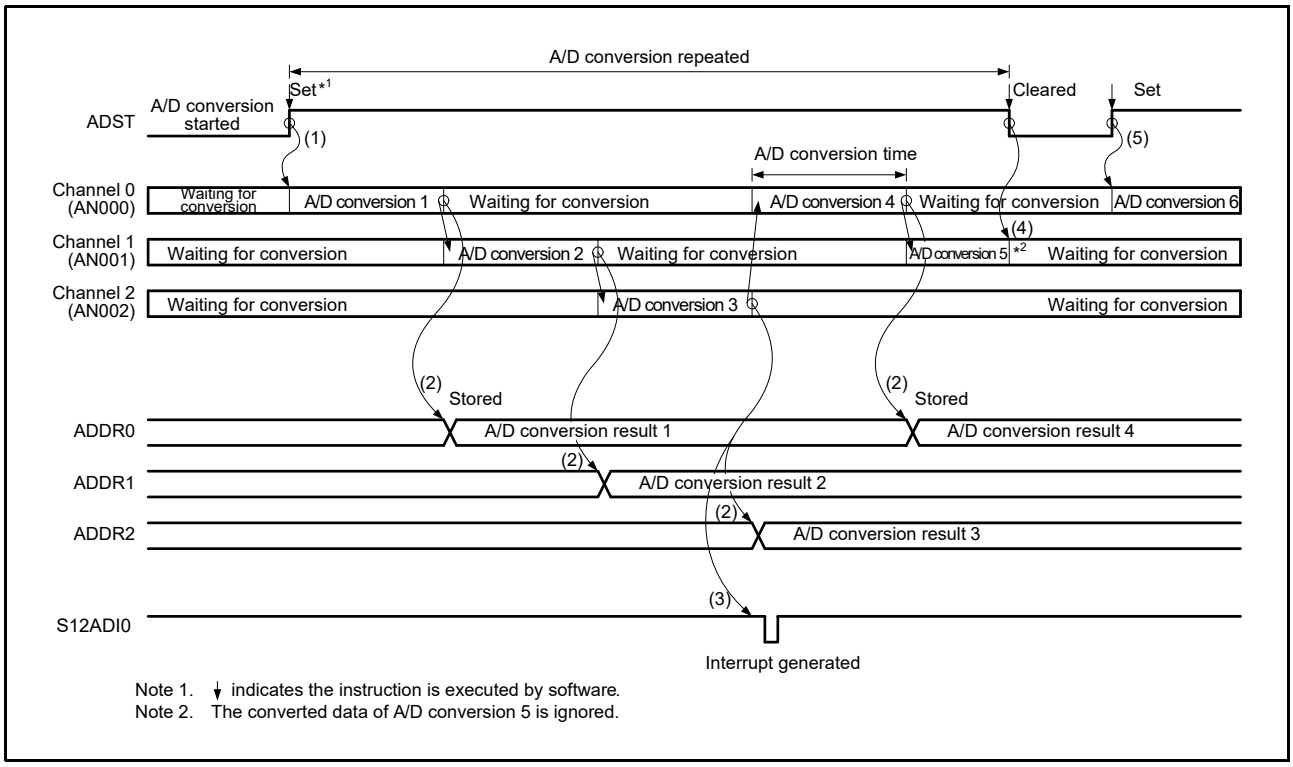

Figure 35.8 Example of Operation in Continuous Scan Mode (Basic Operation: AN000 to AN002 Selected)

35.3.3.2 Channel Selection and Self-Diagnosis

When channels and self-diagnosis are selected at the same time, A/D conversion is first performed for the reference voltage VREFH0 supplied to the 12-bit A/D converter, and then A/D conversion is performed on the analog input of the selected channels, which sequence is repeated as below.

(1) When the ADCSR.ADST bit is set to 1 (A/D conversion start) by software, synchronous trigger, or asynchronous trigger input, A/D conversion for self-diagnosis is started first.
(2) When A/D conversion for self-diagnosis is completed, the A/D conversion result is stored into the A/D self-diagnosis data register (ADRD). A/D conversion is then performed for ANn channels selected by the ADANSA0 register, starting from the channel with the smallest number n.
(3) Each time A/D conversion of a single channel is completed, the A/D conversion result is stored into the corresponding A/D data register (ADDRy).
(4) When A/D conversion of all the selected channels is completed, an S12ADI0 interrupt request is generated if the ADCSR.ADIE bit is 1 (S12ADI0 interrupt upon scanning completion enabled). At the same time, the 12-bit A/D converter starts A/D conversion for self-diagnosis and then starts A/D conversion on ANn channels selected by the ADANSA0 register, starting from the channel with the smallest number n.
(5) The ADST bit is not automatically cleared and steps 2 to 4 are repeated as long as the bit remains 1. When the ADST bit is set to 0 (A/D conversion stop), A/D conversion stops and the 12-bit A/D converter enters a wait state.
(6) When the ADST bit is later set to 1 (A/D conversion start), the A/D conversion for self-diagnosis is started again.

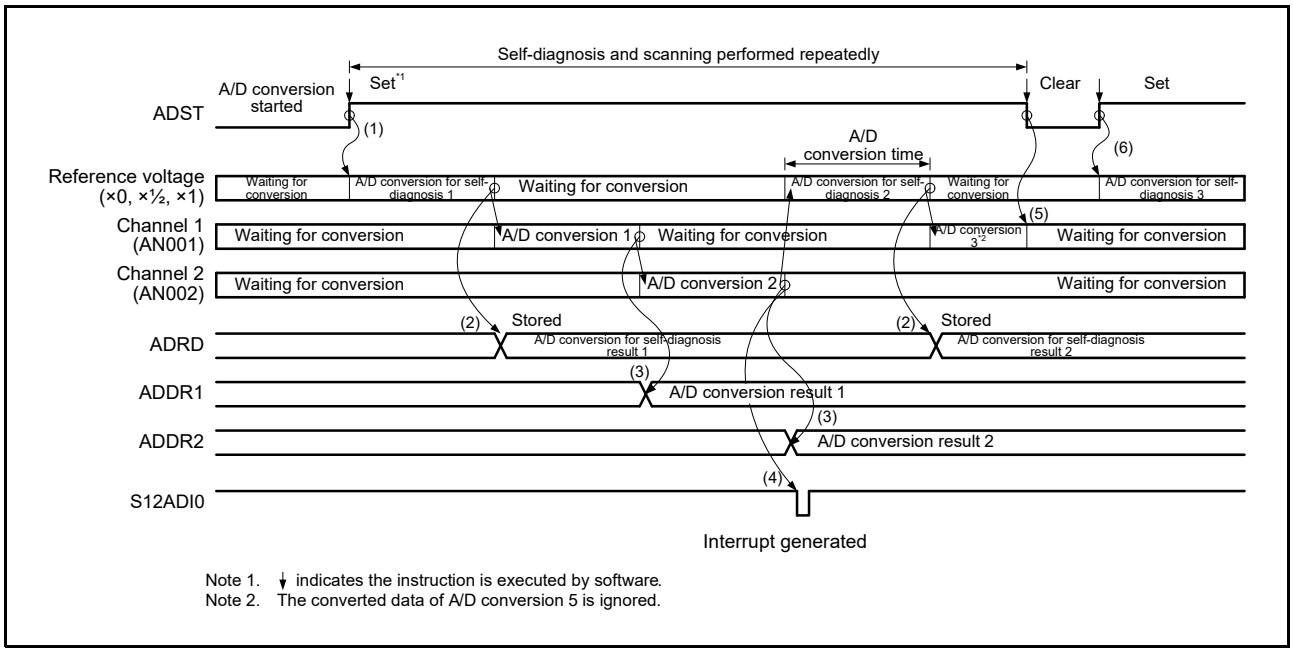

Note 1. ↓ indicates the instruction is executed by software.
Note 2. The converted data of A/D conversion 5 is ignored.

Figure 35.9 Example of Operation in Continuous Scan Mode (Basic Operation; AN001 and AN002 Selected + Self-Diagnosis)

35.3.4 Group Scan Mode

35.3.4.1 Basic Operation

In basic operation of group scan mode, A/D conversion is performed once on the analog inputs of all the specified channels in group A and group B after scanning is started by a synchronous trigger as below. Scan operation of each group is similar to the scan operation in single scan mode.
The synchronous triggers of group A and B can be selected using the TRSA[5:0] and TRSB[5:0] bits in ADSTRGR, respectively. The different triggers should be used for group A and group B to prevent simultaneous A/D conversion of group A and group B. Software trigger should not be used.
The group A channels to be A/D-converted are selected using the ADANSA0 register while the group B channels to be A/D-converted are selected using the ADANSB0 register. The same channels cannot be selected for both groups.
When self-diagnosis is selected in group scan mode, self-diagnosis is separately executed for group A and group B.
The following describes operation in group scan mode using a trigger from the MTU. The TRG4AN and TRG4BN triggers from the MTU are assumed to be used to start conversion of group A and group B, respectively.

(1) Scanning of group A is started by the TRG4AN trigger from the MTU.
(2) When group A scanning is completed, an S12ADI0 interrupt is generated if the ADCSR.ADIE bit is 1 (S12ADI0 interrupt upon scanning completion enabled).
(3) Scanning of group B is started by the TRG4BN trigger from the MTU.
(4) When group B scanning is completed, a GBADI interrupt is generated if the ADCSR.GBADIE bit is 1 (GBADI interrupt upon scanning completion enabled).

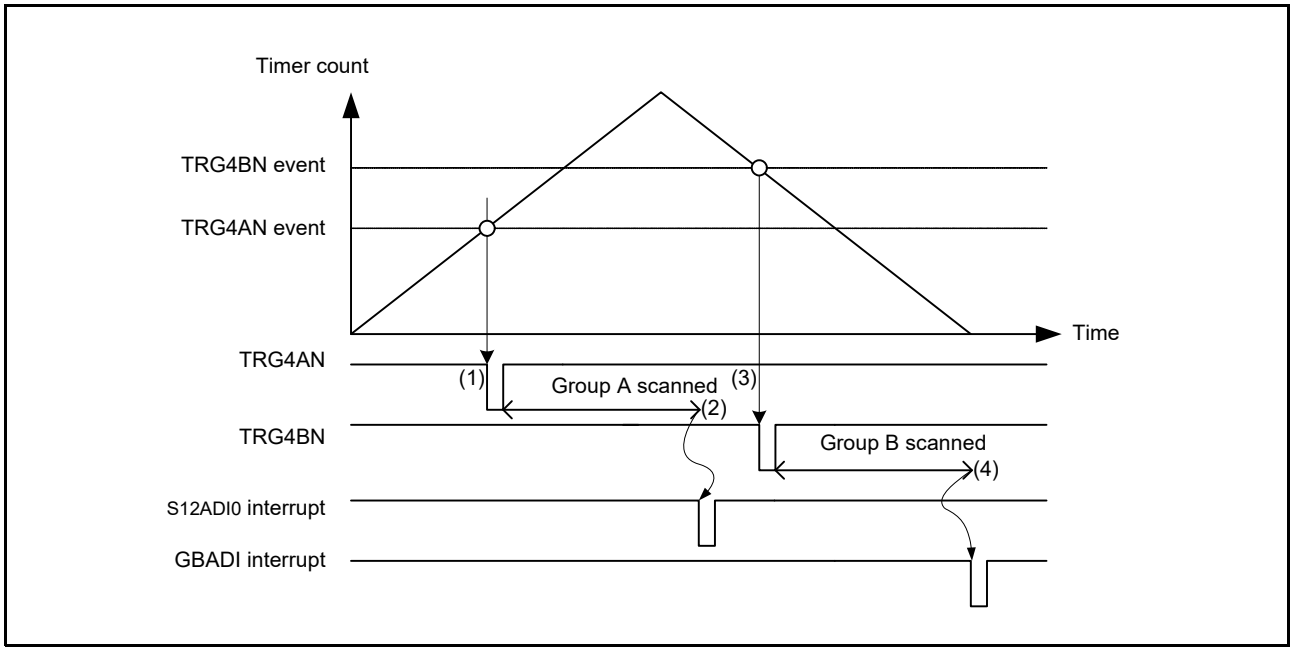

Figure 35.10 Example of Operation in Group Scan Mode (Basic Operation: Synchronous Triggers from MTU Used)

35.3.4.2 A/D Conversion in Double Trigger Mode

When double trigger mode is selected in group scan mode, two rounds of single scan operation started by a synchronous trigger are performed as a sequence for group A. For group B, single scan operation started by a synchronous trigger is performed once.

In group scan mode, the synchronous triggers of group A and B can be selected using the TRSA[5:0] and TRSB[5:0] bits in ADSTRGR, respectively. The different triggers should be used for group A and group B to prevent simultaneous A/D conversion of group A and group B. Software trigger and asynchronous trigger should not be used.

The group A and group B channels to be A/D-converted are selected using the ADCSR.DBLANS[4:0] bits and the ADANSB0 register, respectively. The same channels cannot be selected for both groups.

When double trigger mode is selected in group scan mode, self-diagnosis cannot be selected.

Duplication of A/D conversion data is enabled by setting the channel numbers to be duplicated to the ADCSR.DBLANS[4:0] bits and setting the ADCSR.DBLE bit to 1.

The following describes operation in group scan mode with double trigger mode using a synchronous trigger from the MTU. The TRG4ABN and TRG0AN triggers from the MTU are assumed to be used to start conversion of group A and group B, respectively.

(1) Scanning of group B is started by the TRG0AN trigger from the MTU.
(2) When group B scanning is completed, a GBADI interrupt is generated if the ADCSR.GBADIE bit is 1 (GBADI interrupt upon scanning completion enabled).
(3) The first scanning of group A is started by the first TRG4ABN trigger from the MTU.
(4) When the first scanning of group A is completed, the conversion result is stored into the corresponding A/D data register (ADDRy); an S12ADI0 interrupt request is not generated irrespective of the ADIE bit setting in ADCSR.
(5) The second scanning of group A is started by the second TRG4ABN trigger from the MTU.
(6) When the second scanning of group A is completed, the conversion result is stored into ADDBLDR. An S12ADI0 interrupt is generated if the ADCSR.ADIE bit is 1 (S12ADI0 interrupt upon scanning completion enabled).

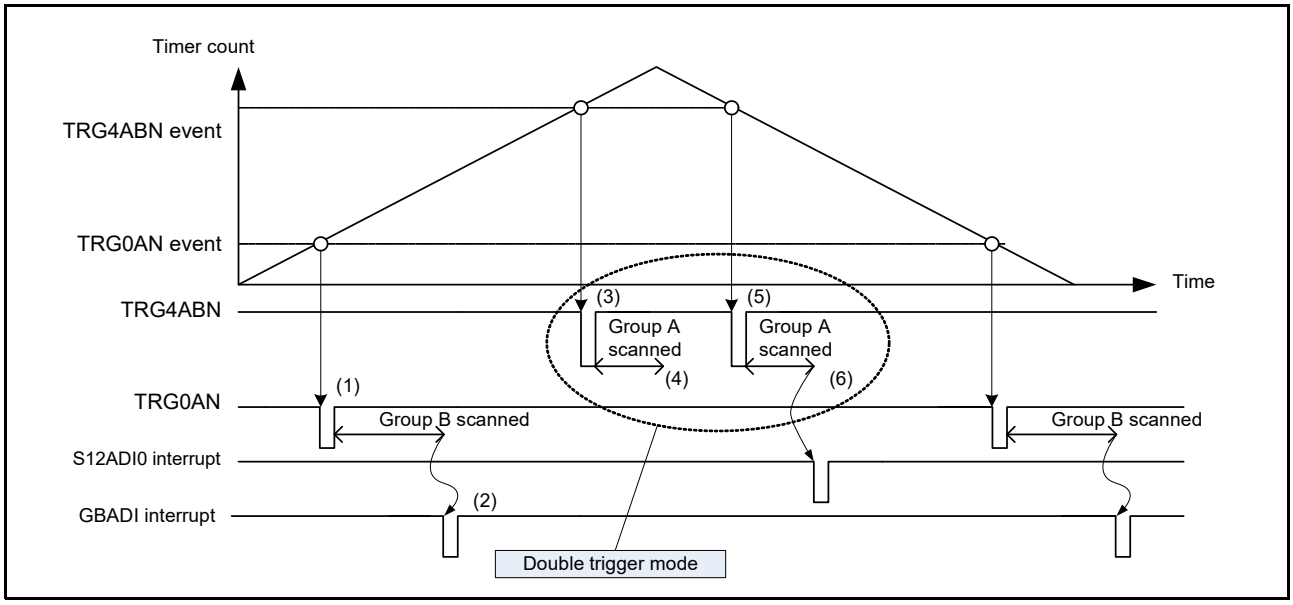

Figure 35.11 Example of Operation in Group Scan Mode with Double Trigger Mode (Basic Operation: Synchronous Triggers from MTU Used)

35.3.4.3 Operation under Group-A Priority Control

Setting the PGS bit in the A/D group scan priority control register (ADGSPCR) to 1 in group scan mode makes operation proceed under group-A priority control. When setting the PGS bit in the ADGSPCR register to 1, follow the procedure described in Figure 35.12. If the procedure is not followed, A/D conversion operation and stored data are not guaranteed.
In operation in basic group scan mode, input of the trigger for the other group during operation for A/D conversion in group A or group B is ignored. Under group-A priority control, if a group-A trigger is input during A/D conversion for group B, A/D conversion for group B is discontinued and A/D conversion for group A proceeds. If the setting of the ADGSPCR.GBRSCN bit is 0, the converter enters a wait state on completion of the A/D conversion for group A. If the setting of the ADGSPCR.GBRSCN bit is 1, the converter automatically restarts scanning for group B from the head of the group after completion of the A/D conversion for group A. Table 35.9 summarizes operations in response to the input of a trigger during A/D conversion with the settings of the ADGSPCR.GBRSCN bit.

Scan operations in group A or group B are the same in single scan mode. Furthermore, single scanning continues to proceed if the ADGSPCR.GBRP bit is set to 1 during scanning operations for group B.

For the trigger settings in group scan mode, select a synchronous trigger for group A using the ADSTRGR.TRSA[5:0] bits and select a synchronous trigger different from that of group A for group B using the ADSTRGR.TRSB[5:0] bits. Set the ADSTRGR.TRSB[5:0] bits to 3Fh when setting the ADGSPCR.GBRP bit to 1. Furthermore, as targets for A/D conversion, select channels for group A using the ADANSA0 register, and for group B, select channels different from those for group A using the ADANSB0 register.

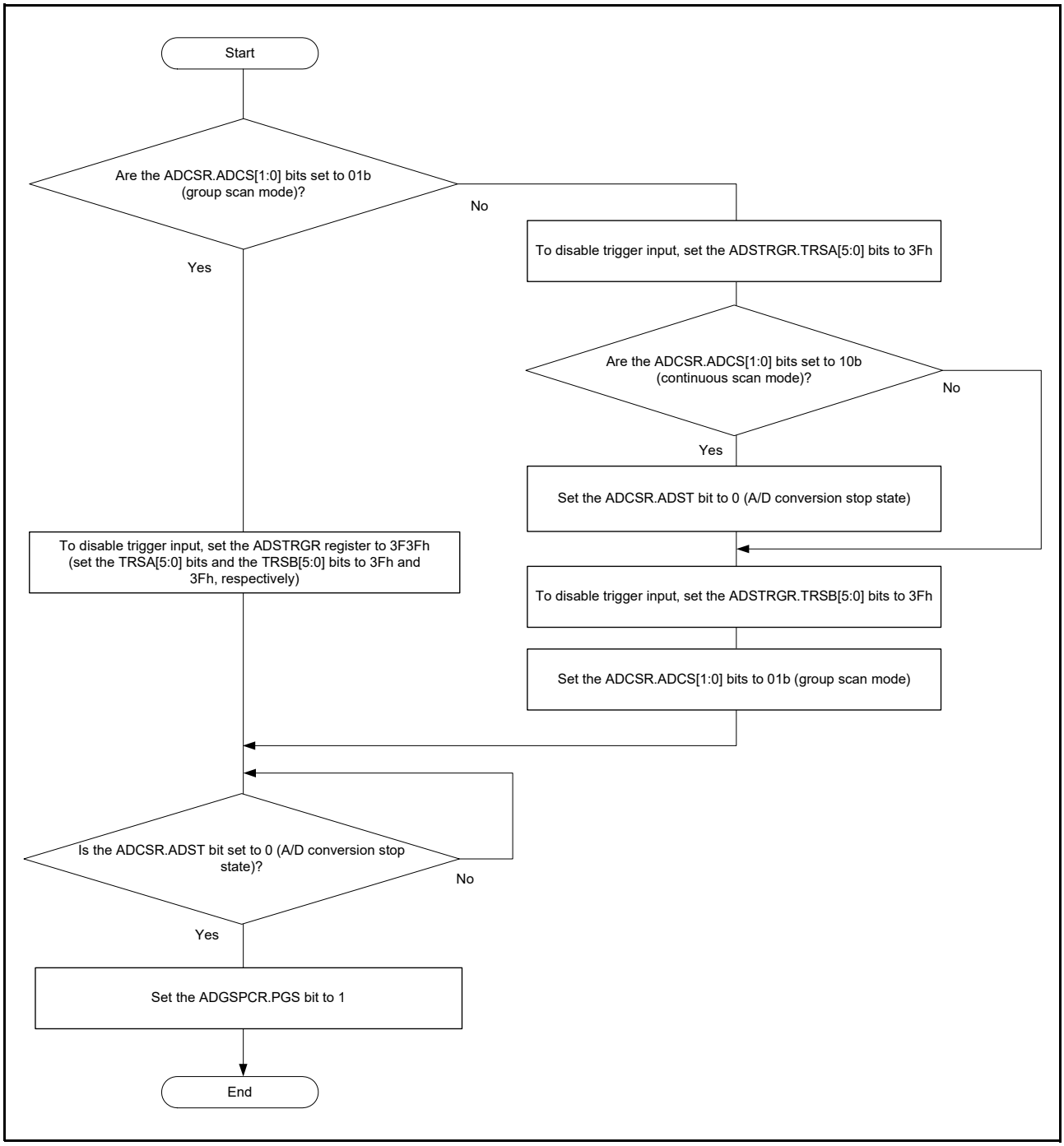

Figure 35.12 Flow of Setting the ADGSPCR.PGS Bit

Table 35.9 Control of A/D Conversion Operations According to the Settings of the ADGSPCR.GBRSCN Bit

A/D Conversion Operation	Trigger Input	ADGSPCR.GBRSCN = 0	ADGSPCR.GBRSCN = 1
When A/D conversion for group A is in progress	Input of trigger for group A	Trigger input is ineffective.	Trigger input is ineffective.
	Input of trigger for group B	Trigger input is ineffective.	A/D conversion is performed on group B after A/D conversion on group A is completed.
When A/D conversion for group B is in progress	Input of trigger for group A	Conversion for group B that is in progress is discontinued and conversion for group A starts.	• Conversion in progress for group B is discontinued and conversion for group A starts. • Conversion for group B starts after conversion for group A is completed.
	Input of trigger for group B	Trigger input is ineffective.	Trigger input is ineffective.

The following describes the operations in group scan mode under group-A priority control (i.e. ADGSPCR.GBRSCN = 1 and ADGSPCR.GBRP = 0) when channel 0 is selected for group A and channels 1 to 3 are selected for group B.

(1) When input of a trigger for group B sets the ADCSR.ADST bit to 1 (A/D conversion start), conversion for the ANn channels selected in the ADANSB0 register, starting from the channel with the smallest number n.
(2) On completion of A/D conversion, the result is stored in the corresponding A/D data register (ADDRy).
(3) The ADCSR.ADST bit is cleared on the input of a trigger for group A while operation for A/D conversion in group B is in progress, and the latter is discontinued. After that, the ADCSR.ADST bit is set to 1 (A/D conversion start), and conversion for the ANn channels selected in the ADANSA0 register, starting from the channel with the smallest number n.
(4) On completion of A/D conversion on a single channel, the result is stored in the corresponding A/D data register (ADDRy).
(5) An S12ADI0 interrupt request is generated if the setting of the ADCSR.ADIE bit is 1 (S12ADI0 interrupt upon scanning completion enabled).
(6) After the ADST bit is automatically cleared, again, the bit is automatically set to 1 (A/D conversion start) and conversion for the ANn channels of group B selected in the ADANSB0 register, starting from the channel with the smallest number n.
(7) On completion of A/D conversion on a single channel, the result is stored in the corresponding A/D data register (ADDRy).
(8) A GBADI interrupt request is generated if the setting of the ADCSR.GBADIE bit is 1 (GBADI interrupt upon group B scanning completion enabled).
(9) The ADST bit remains 1 (A/D conversion start) during A/D conversion and is automatically cleared on completion of conversion, after which the A/D converter enters a wait state.

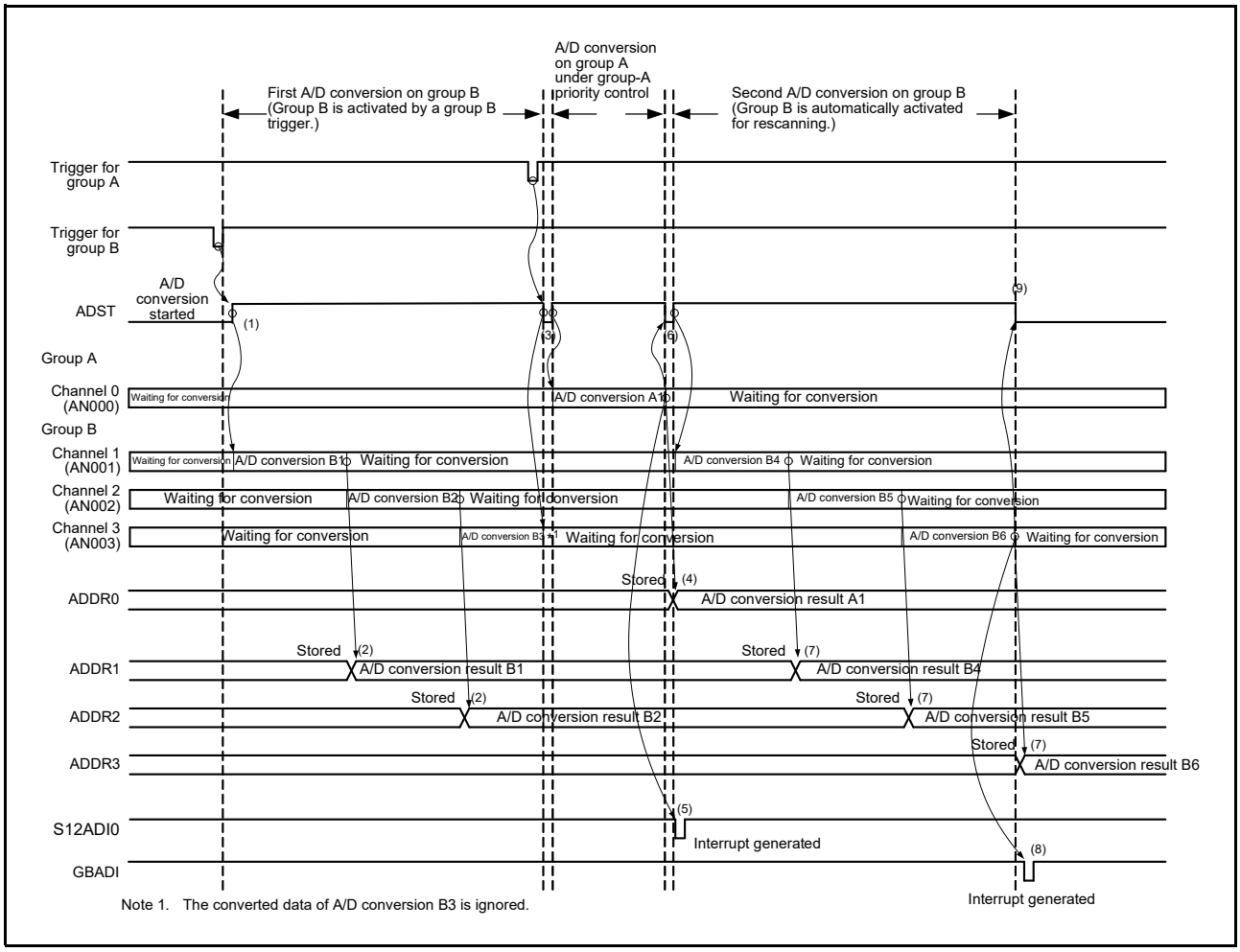

Figure 35.13 Example of Operations under Group-A Priority Control (1) (when ADGSPCR.GBRSCN = 1 and ADGSPCR.GBRP = 0)

The following is an example when a group A trigger is input again during rescanning operation on group B. In this example, channel 0 is selected for group A and channels 1 to 3 are selected for group B when operation on group A is given priority (ADGSPCR.GBRSCN = 1, ADGSPCR.GBRP = 0).

(1) When a group B trigger input sets the ADCSR.ADST bit to 1 (A/D conversion start), conversion for the ANn channels of group B selected in the ADANSB0 register starts in order from the channel with the lowest number n.

(2) On completion of A/D conversion on a single channel, the result is stored in the corresponding A/D data register (ADDRy).

(3) The ADCSR.ADST bit is cleared to 0 (A/D conversion stop) on the input of a trigger for group A while operation for A/D conversion in group B is in progress, and the latter is discontinued.

(4) After that, the ADCSR.ADST bit is set to 1 automatically and A/D conversion for the ANn group A channels selected in the ADANSA0 register starts in order from the channel with the lowest number n.

(5) On completion of A/D conversion on a single channel, the result is stored in the corresponding A/D data register (ADDRy).

(6) An S12ADI0 interrupt request is generated if the setting of the ADCSR.ADIE bit is 1 (S12ADI0 interrupt upon scanning completion enabled).

(7) On completion of A/D conversion on the group A, rescanning operation on group B sets the ADCSR.ADST bit to 1 automatically if the setting of the ADGSPCR.GBRSCN bit is 1 (rescanning operation enabled). After that, A/D conversion for the ANn group B channels selected in the ADANSB0 register starts again in order from the channel with the lowest number n.

(8) On completion of A/D conversion on a single channel, the result is stored in the corresponding A/D data register (ADDRy).

(9) If a group A trigger is input during A/D conversion on group B for rescanning, the ADCSR.ADST bit is cleared to 0 (A/D conversion stop) and the ongoing A/D conversion on group B is stopped.

(10) After that, the ADCSR.ADST bit is set to 1 automatically and A/D conversion for the ANn group A channels selected in the ADANSA0 register starts in order from the channel with the lowest number n.

(11) On completion of A/D conversion on a single channel, the result is stored in the corresponding A/D data register (ADDRy).

(12) An S12ADI0 interrupt request is generated if the setting of the ADCSR.ADIE bit is 1 (S12ADI0 interrupt upon scanning completion enabled).

(13) On completion of A/D conversion on group A, rescanning operation on group B sets the ADCSR.ADST bit to 1 automatically if the setting of the ADGSPCR.GBRSCN bit is 1 (rescanning operation enabled). After that, A/D conversion for the ANn group B channels selected in the ADANSB0 register starts again in order from the channel with the lowest number n.

(14) If a group A trigger is input during A/D conversion on group B for rescanning, steps 9 to 13 are repeated. If a group A trigger is not input, the ADCSR.ADST bit is cleared automatically on completion of A/D conversion on group B and the 12-bit A/D converter enters a wait state.

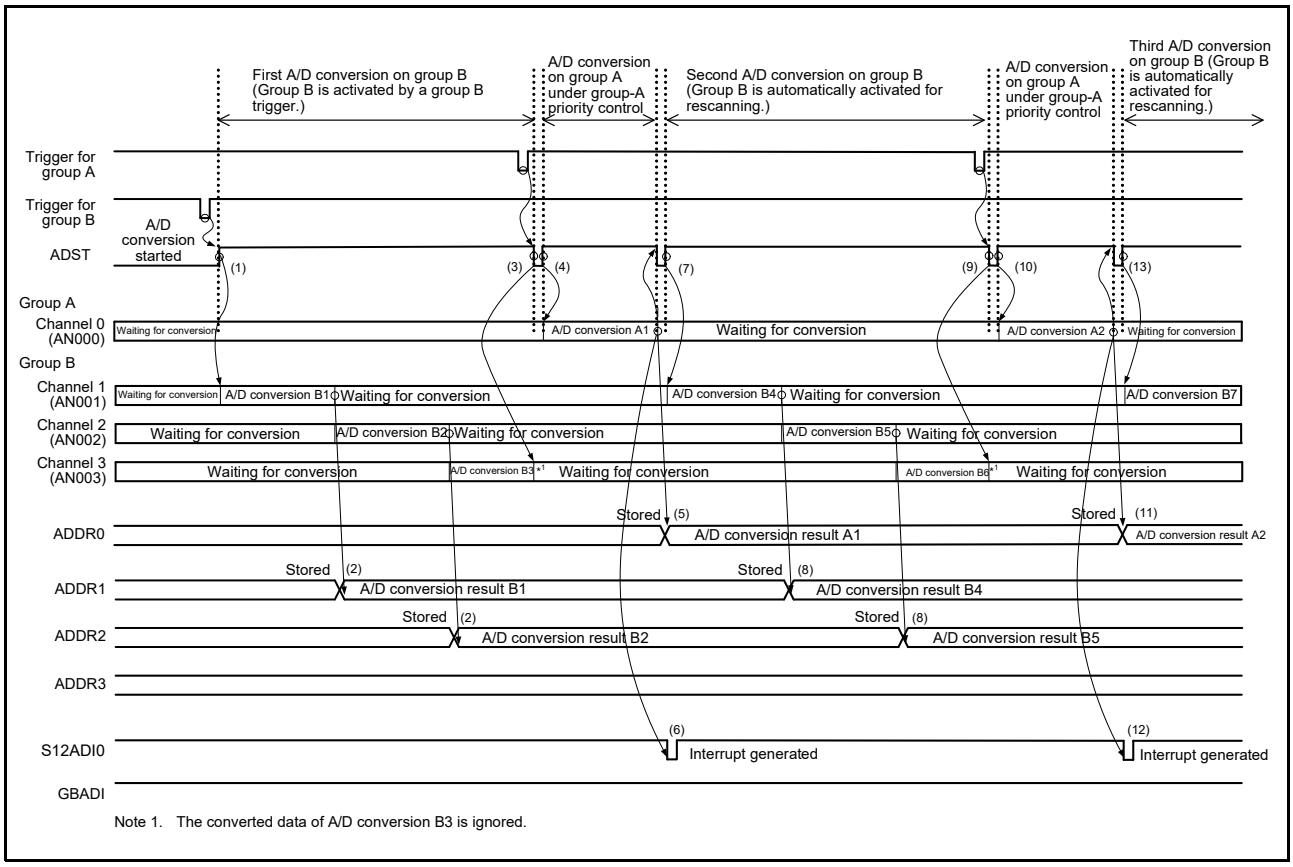

Note 1. The converted data of A/D conversion B3 is ignored.

Figure 35.14 Example of Operations under Group-A Priority Control (2) (when ADGSPCR.GBRSCN = 1 and ADGSPCR.GBRP = 0)

The following is an example of a rescanning operation in which a group B trigger is input during A/D conversion on group A. In this example, channels 1 to 3 are selected for group A and channel 0 is selected for group B when operation on group A is given priority (ADGSPCR.GBRSCN = 1, ADGSPCR.GBRP = 0).

(1) When input of a trigger for group A sets the ADCSR.ADST bit to 1 (A/D conversion start), conversion for the ANn channels selected in the ADANSA0 register, starting from the channel with the smallest number n.
(2) On completion of A/D conversion on a single channel, the result is stored in the corresponding A/D data register (ADDRy).
(3) If a group B trigger is input during A/D conversion on group A, A/D conversion on group B can be performed after the A/D conversion on group A is completed. (However, if group A triggers are input continuously, the scan operation on group B is canceled by group A and is not performed.)
(4) On completion of the A/D conversion on the group A, an S12ADI0 interrupt request is generated if the setting of the ADCSR.ADIE bit is 1 (S12ADI0 interrupt upon scanning completion enabled).
(5) On completion of the A/D conversion on the group A, activation of group B for rescanning sets the ADCSR.ADST bit to 1 automatically.
After that, conversion for the ANn channels of group B selected in the ADANSB0 register, starting from the channel with the smallest number n.
(6) On completion of A/D conversion on a single channel, the result is stored in the corresponding A/D data register (ADDRy).
(7) On completion of the rescanning operation on the group B, a GBADI interrupt request is generated if the setting of the ADCSR.GBADIE bit is 1 (GBADI interrupt upon scanning completion enabled).
(8) The ADST bit retains the value 1 (A/D conversion start) during A/D conversion and is automatically cleared on completion of conversion, after which the A/D converter enters a wait state.

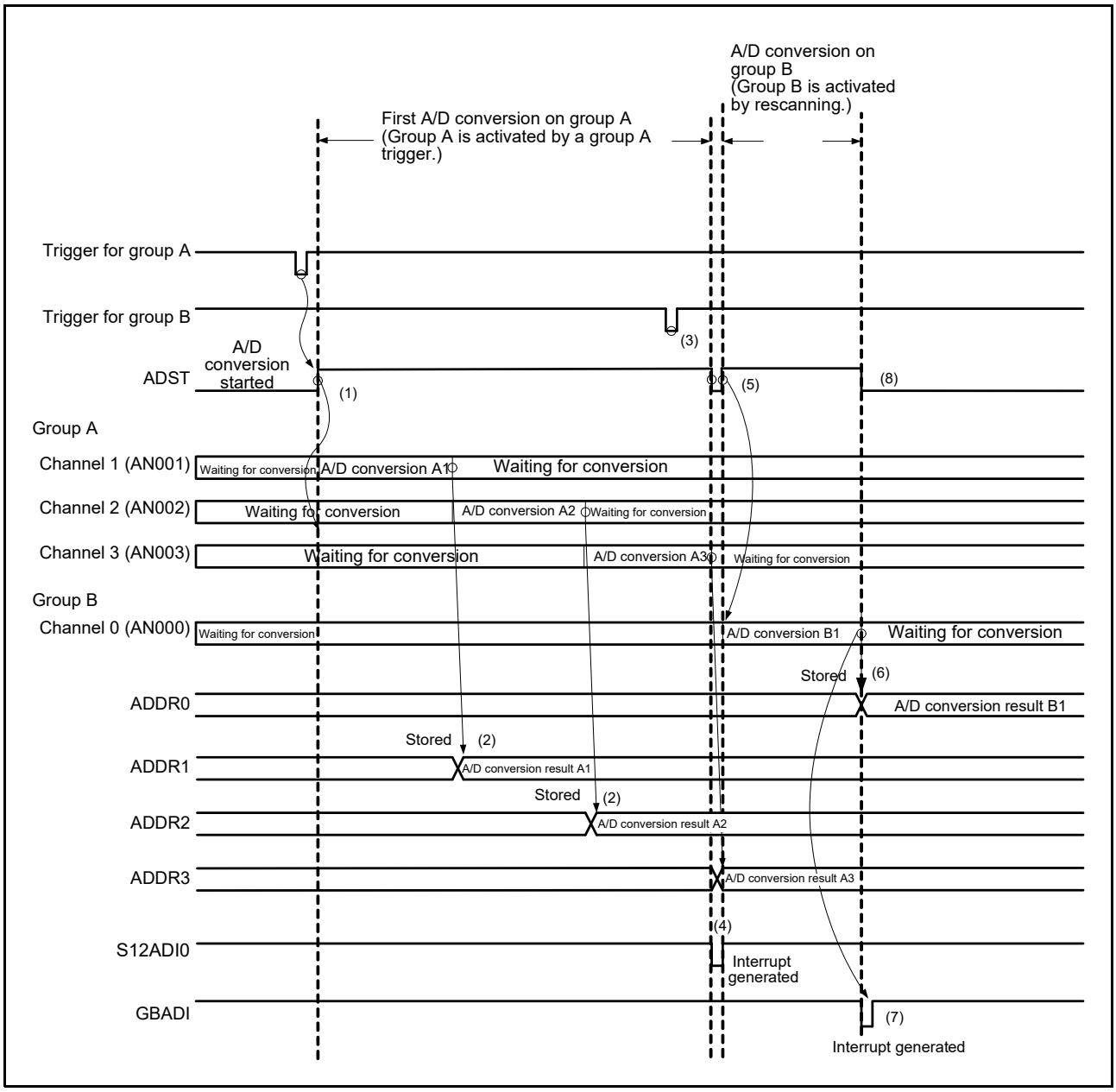

Figure 35.15 Example of Operations under Group-A Priority Control (3) (when ADGSPCR.GBRSCN = 1 and ADGSPCR.GBRP = 0)

The following is an example of operation under group-A priority control in which channel 0 is selected for group A and channels 1 to 3 are selected for group B (ADGSPCR.GBRSCN = 0, ADGSPCR.GBRP = 0).

(1) When input of a trigger for group B sets the ADCSR.ADST bit to 1 (A/D conversion start), conversion for the ANn channels selected in the ADANSB0 register, starting from the channel with the smallest number n.
(2) On completion of A/D conversion on a single channel, the result is stored in the corresponding A/D data register (ADDRy).
(3) If a group A trigger is input during A/D conversion on group B, the ADCSR.ADST bit is cleared to 0 and the ongoing A/D conversion on group B is stopped. After that, the ADCSR.ADST bit is set to 1 (A/D conversion start) and conversion for the ANn channels selected in the ADANSA0 register, starting from the channel with the smallest number n.
(4) On completion of A/D conversion on a single channel, the result is stored in the corresponding A/D data register (ADDRy).
(5) An S12ADI0 interrupt request is generated if the setting of the ADCSR.ADIE bit is 1 (S12ADI0 interrupt upon scanning completion enabled).
(6) The ADCSR.ADST bit retains the value 1 (A/D conversion start) during A/D conversion and is cleared on completion of conversion, after which the A/D converter enters a wait state.

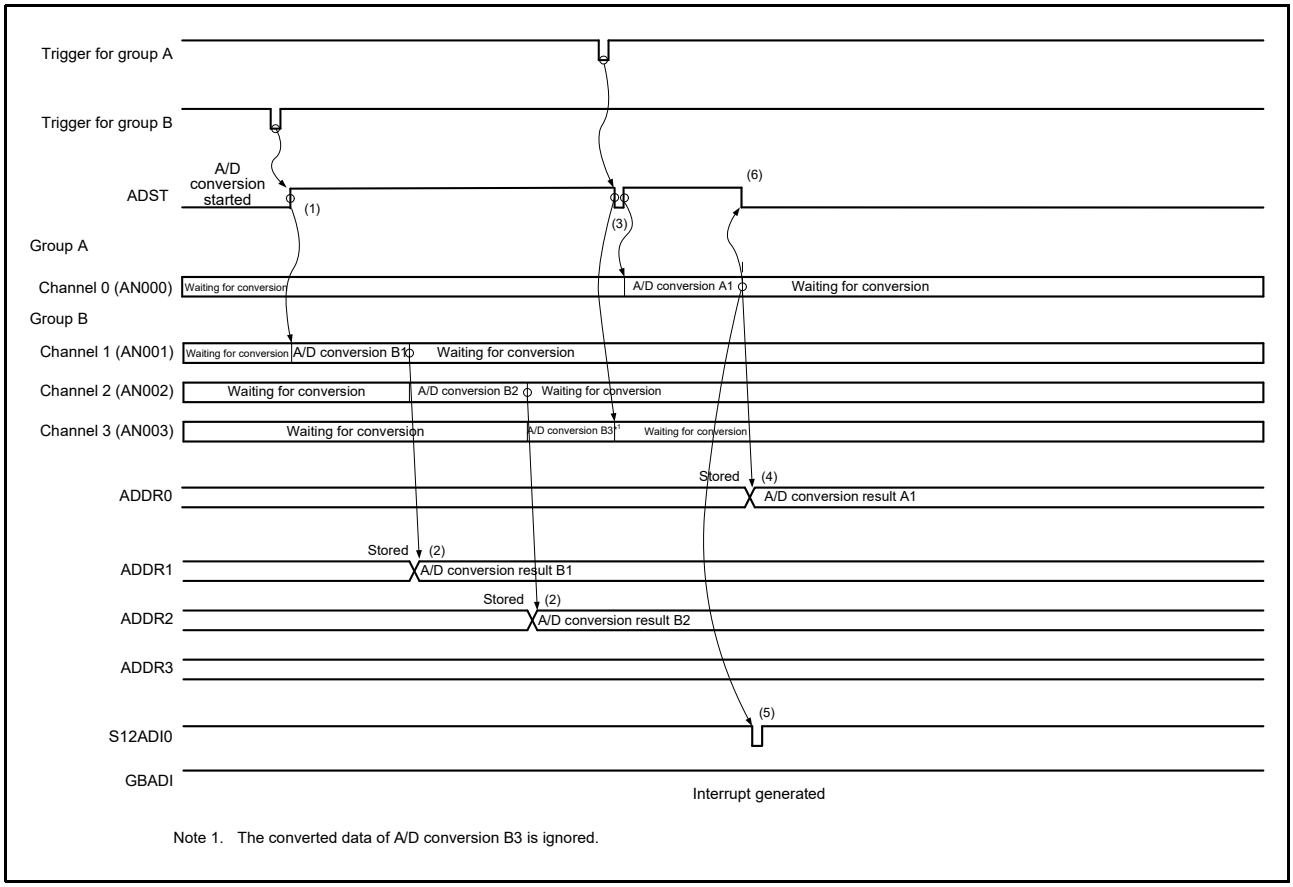

Figure 35.16 Example of Operation under Group-A Priority Control (4) (when ADGSPCR.GBRSCN = 0 and ADGSPCR.GBRP = 0)

The following is an example of operation under group-A priority control in which channel 0 is selected for group A and channels 1 to 3 are selected for group B (ADGSPCR.GBRP = 1).

(1) The ADCSR.ADST bit is set to 1 (A/D conversion start) when ADGSPCR.GBRP is set to 1, and conversion for the ANn channels selected in the ADANSB0 register, starting from the channel with the smallest number n.
(2) On completion of A/D conversion on a single channel, the result is stored in the corresponding A/D data register (ADDRy).
(3) If a group A trigger is input during A/D conversion on group B, the ADCSR.ADST bit is cleared to 0 and the ongoing A/D conversion on group B is stopped. After that, the ADCSR.ADST bit is set to 1 (A/D conversion start) and conversion for the ANn channels selected in the ADANSA0 register, starting from the channel with the smallest number n.
(4) On completion of A/D conversion on a single channel, the result is stored in the corresponding A/D data register (ADDRy).
(5) An S12ADI0 interrupt request is generated if the setting of the ADCSR.ADIE bit is 1 (S12ADI0 interrupt upon scanning completion enabled).
(6) After the ADST bit is automatically cleared, again, the ADCSR.ADST bit is automatically set to 1 (A/D conversion start) and conversion for the ANn channels selected in the ADANSB0 register, starting from the channel with the smallest number n.
(7) On completion of A/D conversion on a single channel, the result is stored in the corresponding A/D data register (ADDRy).
(8) A GBADI interrupt request is generated if the setting of the ADCSR. GBADIE bit is 1.
(9) After the ADST bit is automatically cleared, again, the bit is automatically set to 1 (A/D conversion start) and conversion for the ANn channels selected in the ADANSB0 register, starting from the channel with the smallest number n. Steps 6 to 9 are repeated as long as the ADGSPCR.GBRP bit remains 1.
Clearing of the ADCSR.ADST bit to 0 is prohibited while the ADGSPCR.GBRP bit is set to 1. To forcibly stop A/D conversion when ADGSPCR.GBRP = 1, follow the procedures for clear operation by software through the ADCSR.ADST bit shown in section 35.8.2, Notes on Stopping A/D Conversion.

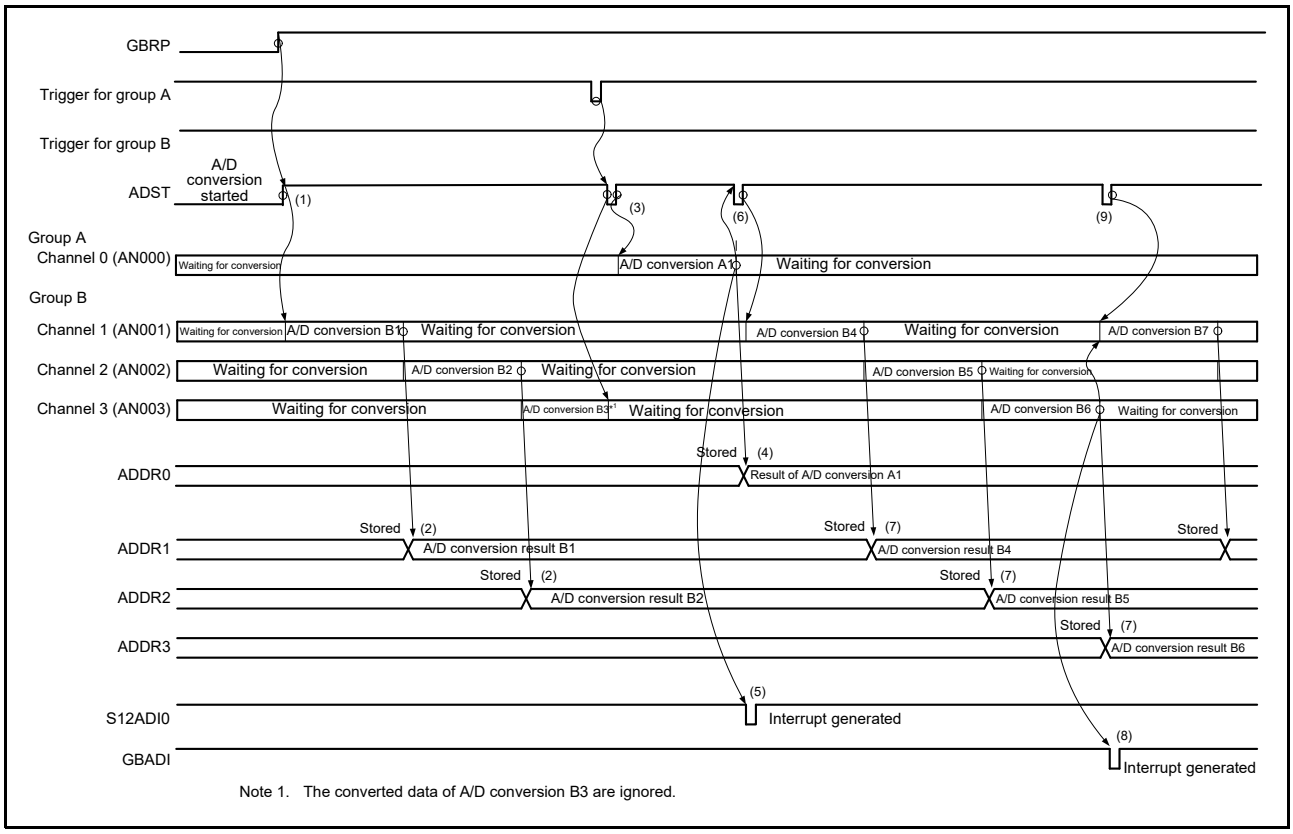

Figure 35.17 Example of Operation under Group-A Priority Control (5) (when ADGSPCR.GBRP = 1)

35.3.5 Compare Function (Window A, Window B)

35.3.5.1 Compare Function Window A/B

The compare function compares the reference value set in the register with the A/D conversion result. The reference value can be set for window A and window B independently. When the compare function is in use, the self-diagnosis function and double trigger mode cannot be used. Big differences between window A and window B are different interrupt output signals and that window B can select only one channel.

The following describes operations in combination of continuous scan mode and the compare function.

(1) When the ADCSR.ADST bit is set to 1 (A/D conversion start) by software, synchronous trigger, or asynchronous trigger input A/D conversion starts in the order of the selected channel.
(2) Upon completion of A/D conversion, the result is stored in the corresponding A/D data register (ADDRy). When ADCMPCR.CMPAE is 1, if the ADCMPANSR0 register is set for window A, the results of A/D conversion are to be compared with the values set in the ADCMPDR0 and ADCMPDR1 registers. When ADCMPCR.CMPBE is 1, if the ADCMPBNSR register is set for window B, the results of A/D conversion are to be compared with the values set in the ADWINULB and ADWINLLB registers.
(3) As a result of the comparison, when window A meets the condition set in ADCMPDR0, the compare window A flag (ADCMPSR0.CMPSTCHA0n) is set to 1. In the same way, when window B meets the condition set in ADCMPBNSR.CMPLB, the compare window B flag (ADCMPBSR.CMPSTB) is set to 1.
(4) Upon completion of all selected A/D conversions and comparisons, scan restarts.
(5) Set the ADCSR.ADST bit to 0 (A/D conversion stop), and execute processing for the channel with the compare flag set to 1.
(6) Clear all compare flags after processing is competed. To perform comparison again, restart A/D conversion.

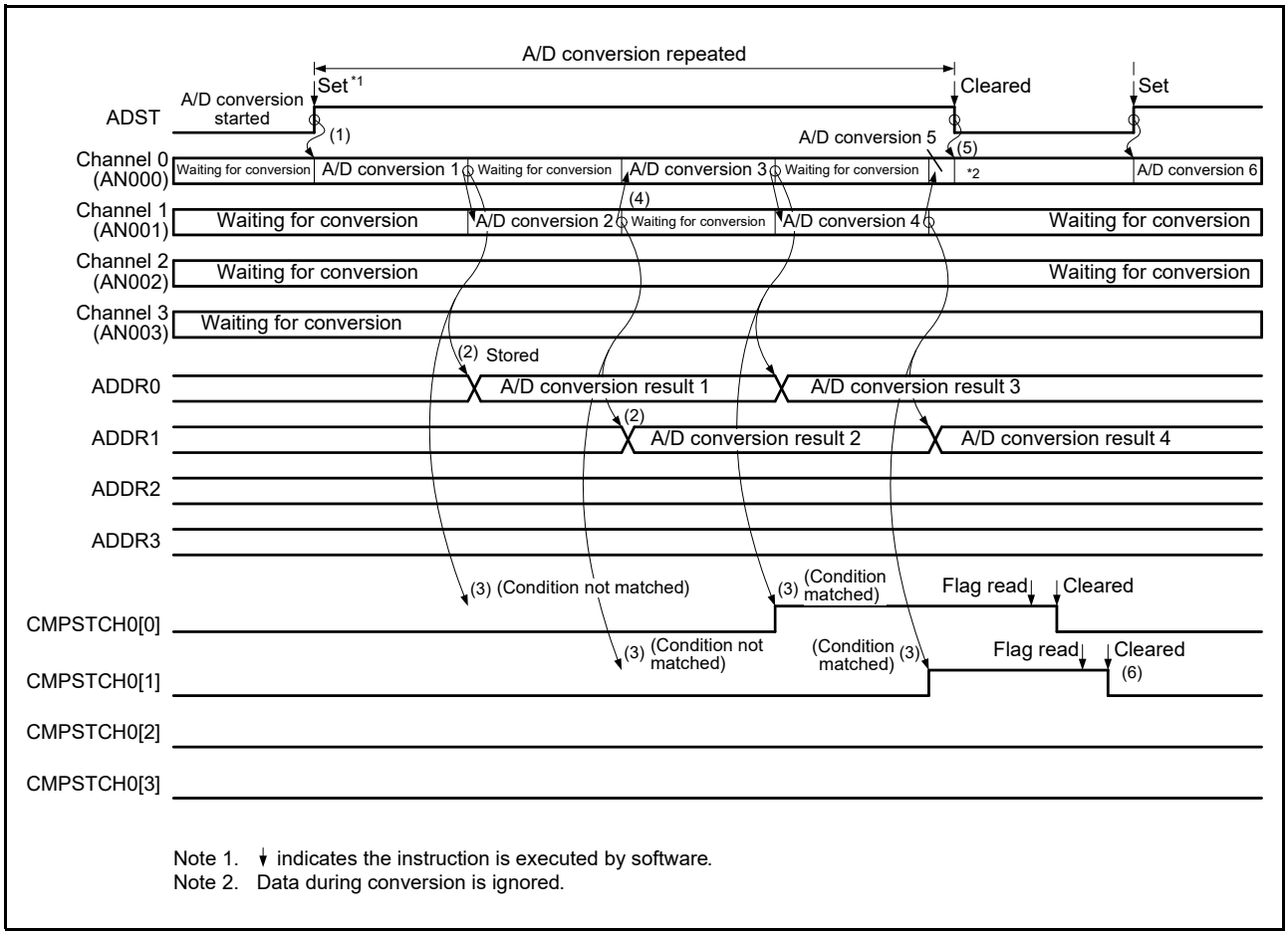

Note 1. ↓ indicates the instruction is executed by software.
Note 2. Data during conversion is ignored.

Figure 35.18 Operation Example of Comparison (AN000 to AN003 Compared)

35.3.5.2 ELC Output of Compare Function

The ELC output of the compare function is used to specify the high-side reference value and the low-side reference value for window A and window B respectively, and to compare the A/D converted value of the selected channel with the high/low-side reference value. Depending on whether the comparison conditions for window A and window B are met or not met, the ELC event (S12ADWMELC/S12ADWUMELC) is output according to the event conditions (A or B, A and B, A exor B).
If multiple channels are selected for window A, when the comparison conditions for any of the channels are met, it is recognized that the comparison conditions for window A are met.

When using this function, perform A/D conversion in single scan mode.
Any channels from AN000 to AN005 are selectable for window A.
Any channels from AN000 to AN005 are selectable for window B.
The setting procedure is as follows when this function is to be used. The setting procedure required for normal A/D conversion in single scan mode is omitted.

(1) Confirm that the value of the ADCSR.ADCS[1:0] bits is 00b (single scan mode).
(2) Select channels (from among AN000 to AN005) in the ADCMPANSR0 register (for window A) and in the ADCMPBNSR register (for window B).
(3) Set window comparison conditions in the ADCMPLR0, and ADCMPBNSR registers, and set the upper-limit and lower-limit reference values in the ADCMPDR0, ADWINULB, and ADWINLLB registers.
(4) Set composite conditions for window A/B, window A/B operation enable, and interrupt output enable in the ADCMPCR register. A scan end event (S12ADELC) is output to the ELC at the end of each single scan. In addition, a match or mismatch event (S12ADWMELC or S12ADWUMELC) is output with a delay of one PCLKB cycle depending on the ADCMPCR.CMPAB[1:0] setting.
Since match and mismatch events are mutually exclusive, these are not output at the same time.

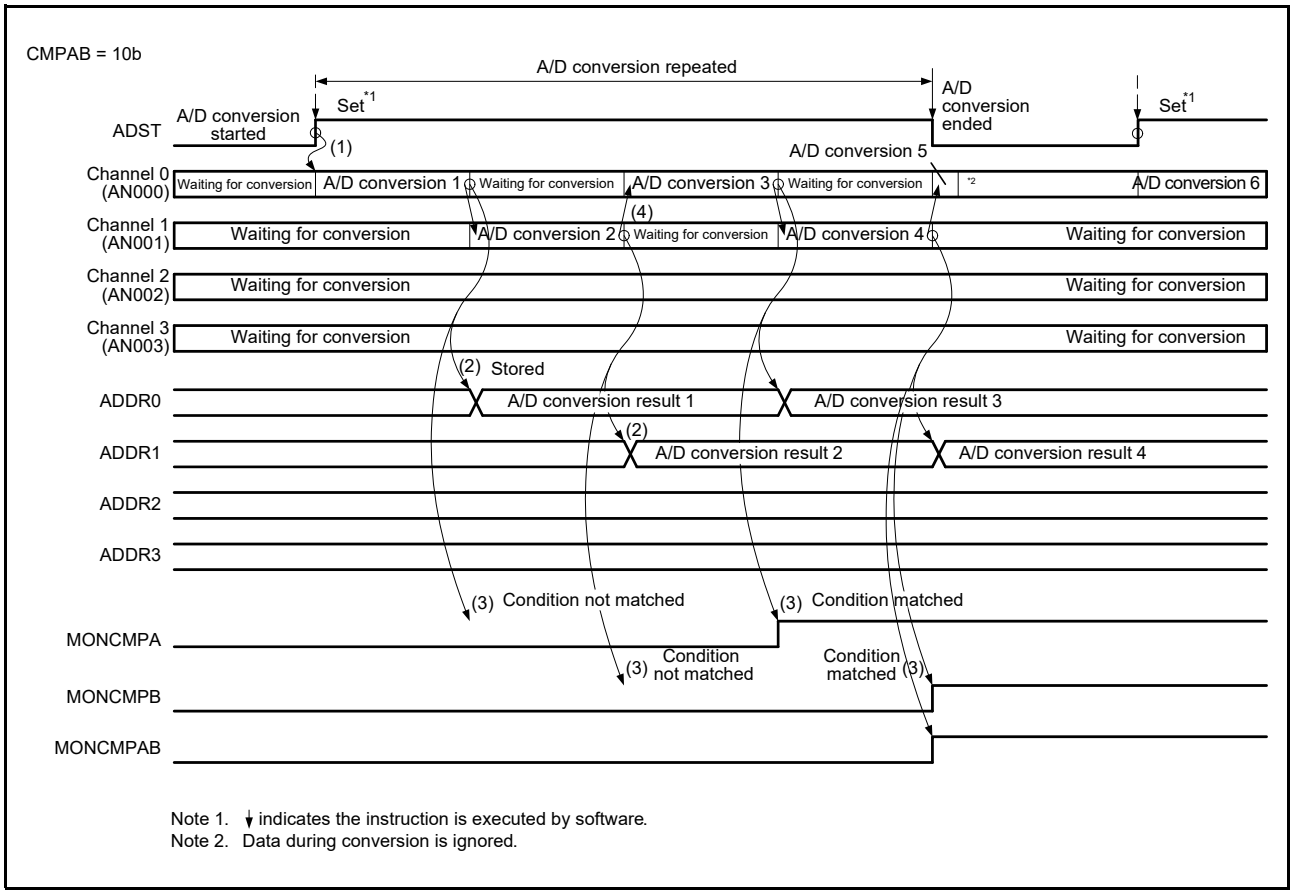

Note 1. ↓ indicates the instruction is executed by software.
Note 2. Data during conversion is ignored.

Figure 35.19 Example of Window Compare Function Operation (AN000 to AN003 Compared)

35.3.5.3 Using Data Buffers

This S12ADE is provided with a ring buffer function consisting of 16 A/D data buffers. This function sequentially stores A/D conversion results other than self-diagnosis result (including addition/average results) in data buffers (ADBUFn, n = 0 to 15) when the compare function is used.

Each conversion result is stored at the timing when the A/D conversion result is stored in the data register, and most recent 16 conversion result data are retained.

The following shows the schematic of data buffers, pointer, and overflow flag operations. When the BUFEN bit is set to1, the A/D conversion result is transferred at each end of A/D conversion. The pointer indicates the number of data buffer to which the next transferred data is to be written. When data is written to up to buffer 15, the pointer is reset to 0000b and the overflow flag is set to 1. Subsequently transferred data overwrites the previously written data. The pointer and overflow flag are reset to the initial value by writing 00h to the ADBUFPTR register.

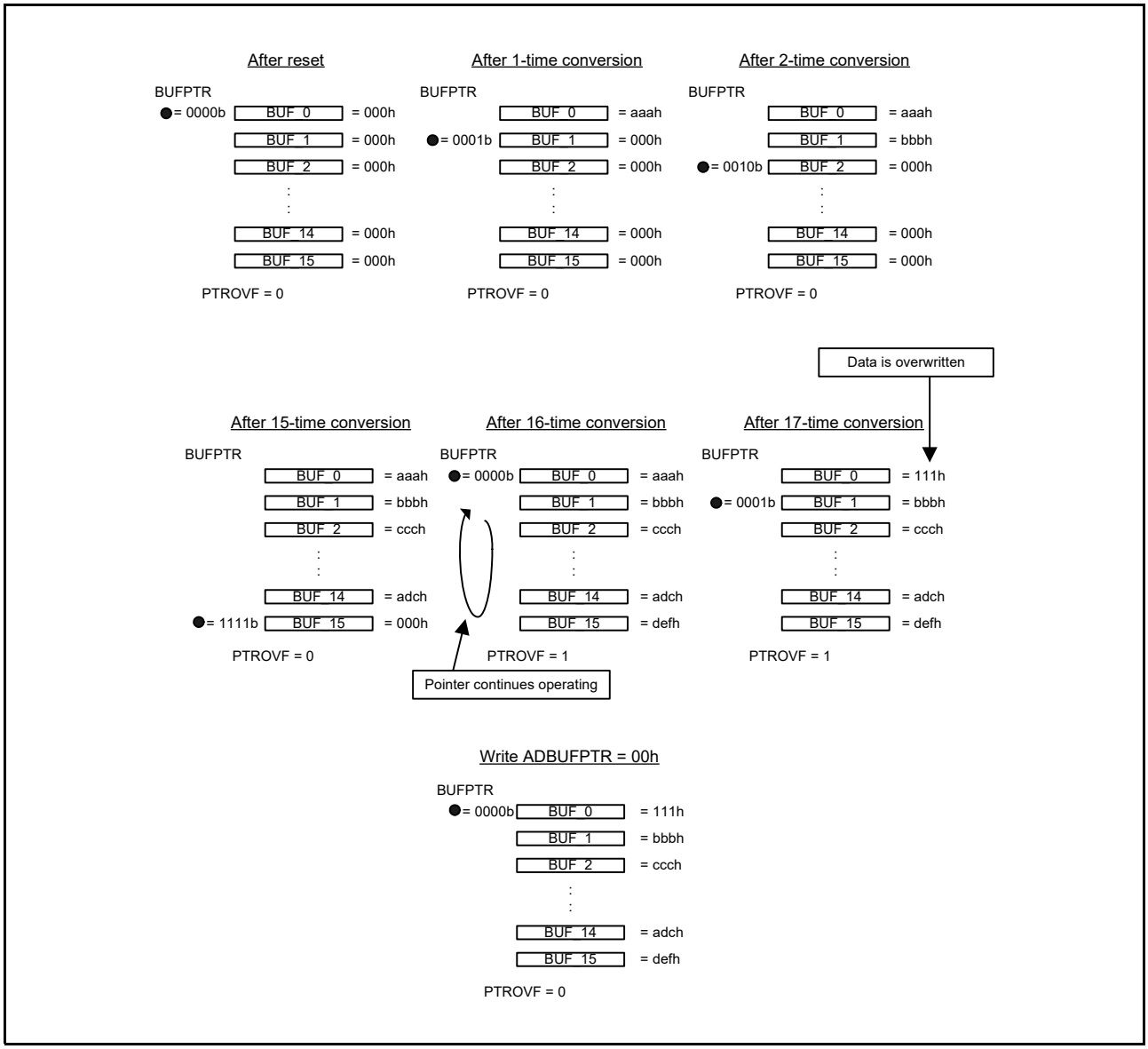

Figure 35.20 Schematic of Data Buffers, Pointer, and Overflow Flag Operations

35.3.5.4 Restrictions for Compare Function

The following restrictions are provided for the compare function.

1. The compare function must not be used together the self-diagnosis function or double trigger mode. (The compare function is not available for the ADRD register and the ADDBLDR register.)
2. Specify single scan mode when using match/mismatch event outputs.
3. It is prohibited to set the same channel for window A and window B.
4. When using the buffer function, specify single scan mode. (It is also prohibited to use double trigger mode together.)
5. Set the reference voltage values so that the high-side reference voltage value is equal to or larger than the low-side reference voltage value.

35.3.6 Analog Input Sampling Time and Scan Conversion Time

Scan conversion can be activated either by software, synchronous trigger, or asynchronous trigger input. After the start-of-scanning-delay time (t_D) has elapsed, processing for disconnection detection assistance and processing of conversion for self-diagnosis proceed, and this is followed by processing for A/D conversion.
Figure 35.21 shows the scan conversion timing in single scan mode, in which scan conversion is activated by software or a synchronous trigger. Figure 35.22 shows the scan conversion timing in single scan mode, in which scan conversion is activated by an asynchronous trigger. The scan conversion time (t_{SCAN}) includes the start-of-scanning-delay time (t_D), disconnection detection assistance processing time (t_{DIS})*1, self-diagnosis A/D conversion processing time (t_{DIAG})*2, A/D conversion processing time (t_{CONV}), and end-of-scanning-delay time (t_{ED}).
The A/D conversion processing time (t_{CONV}) consists of sampling time (t_{SPL}) and time for conversion by successive approximation (t_{SAM}). The sampling time (t_{SPL}) is used to charge sample-and-hold circuits in the A/D converter. If there is not sufficient sampling time due to the high impedance of an analog input signal source, or if the A/D conversion clock (ADCLK) is slow, sampling time can be adjusted using the ADSSTRn register.
The time for conversion by successive approximation (t_{SAM}) is at 32 ADCLK states during high-speed conversion operation, and 41 ADCLK states during low-current conversion operation. Table 35.10 shows the scan conversion time.

The scan conversion time (t_{SCAN}) in single scan mode for which the number of selected channels is n can be determined as follows:

$$t_{SCAN} = t_D + (t_{DIS} \times n) + t_{DIAG} + (t_{CONV} \times n)^{*3} + t_{ED}$$

The scan conversion time for the first cycle in continuous scan mode is t_{SCAN} for single scan minus t_{ED}.
The scan conversion time for the second and subsequent cycles in continuous scan mode is fixed to $(t_{DIS} \times n) + t_{DIAG} + t_{DSD} + (t_{CONV} \times n)$.

Note 1. When disconnection detection assistance is not selected, $t_{DIS} = 0$.
Note 2. When the self-diagnosis function is not used, $t_{DIAG} = 0$, $t_{DSD} = 0$.
Note 3. $t_{CONV} \times n$ when the sampling time (t_{SPL}) of selected channels is the same, but it is the total of the sampling time of each channel and time for conversion by successive approximation (t_{SAM}).

Table 35.10 Times for Conversion during Scanning (in Numbers of Cycles of ADCLK and PCLKB)

Item			Symbol		Type/Conditions: Synchronous Trigger *4	Type/Conditions: Asynchronous Trigger	Type/Conditions: Software Trigger	Unit
Scan start processing time*1, *2	A/D conversion on group A under group-A priority control.	Group B is to be stopped. (Group A is activated after group B is stopped due to an A/D conversion source of group A.)	t_D		3 PCLKB + 6 ADCLK	—	—	Cycle
		Group B is not to be stopped. (Activation by an A/D conversion source of group A.)			2 PCLKB + 4 ADCLK	—	—	
	A/D conversion when self-diagnosis is enabled	A/D conversion for self-diagnosis is to be started.			2 PCLKB + 6 ADCLK	4 PCLKB + 6 ADCLK	6 ADCLK	
	Other than above				2 PCLKB + 4 ADCLK	4 PCLKB + 4 ADCLK	4 ADCLK	
Disconnection detection assistance processing time			t_{DIS}		The setting of ADNDIS[3:0] (initial value = 00h) × ADCLK			
Self-diagnosis conversion processing time*1	Sampling time		t_{DIAG}	t_{SPL}	The setting of ADSSTR0 (initial value = 0Dh) × ADCLK*3			
	Time for conversion by successive approximation	12-bit conversion accuracy		t_{SAM}	32 ADCLK (during high-speed conversion operation)			
					41 ADCLK (during low-current conversion operation)			
	Normal A/D conversion is to be started after completion of self-diagnosis conversion.			t_{DED}	2 ADCLK			
	A/D conversion for self-diagnosis is to be started after completion of conversion for continuous scan on the last channel specified.			t_{DSD}	2 ADCLK			
A/D conversion processing time*1	Sampling time		t_{CONV}	t_{SPL}	The setting of ADSSTRn (n = 0 to 5) (initial value = 0Dh) × ADCLK*3			
	Time for conversion by successive approximation	12-bit conversion accuracy		t_{SAM}	32 ADCLK (during high-speed conversion operation)			
					41 ADCLK (during low-current conversion operation)			
Scan end processing time*1			t_{ED}		1 PCLKB + 3 ADCLK*5			

Note 1. For t_D, t_{DIAG}, t_{CONV}, and t_{ED}, see Figure 35.21 and Figure 35.22.
Note 2. This is the maximum time required from software writing or trigger input to A/D conversion start.
Note 3. The required sampling time (ns) is specified according to the voltage conditions. See section 39.11, 12-Bit A/D Conversion Characteristics.
Note 4. This does not include the time consumed in the path from timer output to trigger input.
Note 5. 2 PCLKB + 2 ADCLK when ADCLK is faster than PCLKB (PCLKB to ADCLK frequency ratio = 1:2).

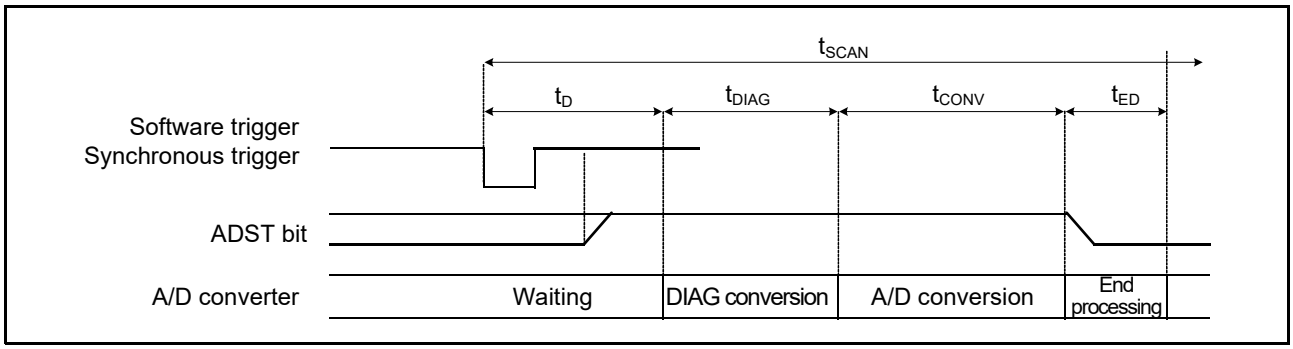

Figure 35.21 Scan Conversion Timing (Activated by Software or Synchronous Trigger)

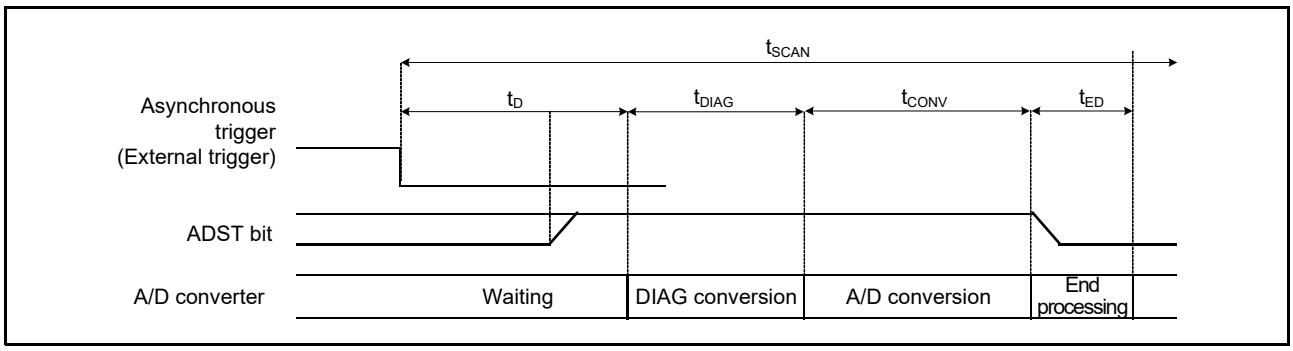

Figure 35.22 Scan Conversion Timing (Activated by Asynchronous Trigger)

35.3.7 Usage Example of A/D Data Register Automatic Clearing Function

Setting the ADCER.ACE bit to 1 automatically clears the A/D data registers (ADDRy, ADRD, ADDBLDR) to 0000h when the A/D data registers are read by the CPU, DTC, or DMAC.

The ring buffer (ADBUFn: n = 0 to 15) is not subject to auto-clearing.

This function enables detection of update failures of the A/D data registers (ADDRy, ADRD, ADDBLDR). The following describes the examples in which the function to automatically clear the ADDRy register is enabled and disabled.

In a case where the ADCER.ACE bit is 0 (automatic clearing disabled), if the A/D conversion result (0222h) is not written to the ADDRy register for some reason, the old data (0111h) will be the ADDRy value. Furthermore, if this ADDRy value is read into a general register using an A/D scan end interrupt, the old data (0111h) can be saved in the general register. When checking whether there is an update failure, it is necessary to frequently save the old data in the RAM or a general register.

In a case where the ADCER.ACE bit is 1 (automatic clearing enabled), when ADDRy = 0111h is read by the CPU, DTC, or DMAC, ADDRy is automatically cleared to 0000h. After that, if the A/D conversion result 0222h cannot be transferred to ADDRy for some reason, the cleared data (0000h) remains as the ADDRy value. If this ADDRy value is read into a general register using an A/D scan end interrupt at this point, 0000h will be saved in the general register. Occurrence of an ADDRy update failure can be determined by simply checking that the read data value is 0000h.

35.3.8 A/D-Converted Value Addition/Average Mode

In A/D-converted value addition mode, the same channel is A/D-converted 2, 3, 4, or 16 consecutive times and the sum of the converted values is stored in the data register. In A/D-converted value average mode, the same channel is A/D-converted two or four consecutive times and the mean of the converted values is stored in the data register. The use of the average of these results can improve the accuracy of A/D conversion, depending on the types of noise components that are present. This function, however, cannot always guarantee an improvement in A/D conversion accuracy.
The A/D-converted value addition or average mode can be specified when A/D conversion of the channel select analog input is selected.

35.3.9 Disconnection Detection Assist Function

This converter incorporates the function to fix the charge for sampling capacitance to the specified state (reference voltage selected by the A/D high-potential/low-potential reference voltage control register) before start of A/D conversion. This function enables disconnection detection in wiring of analog inputs.
Figure 35.23 illustrates the A/D conversion operation when the disconnection detection assist function is used. Figure 35.24 shows an example of disconnection detection when precharge is selected. Figure 35.25 shows an example of disconnection detection when discharge is selected.

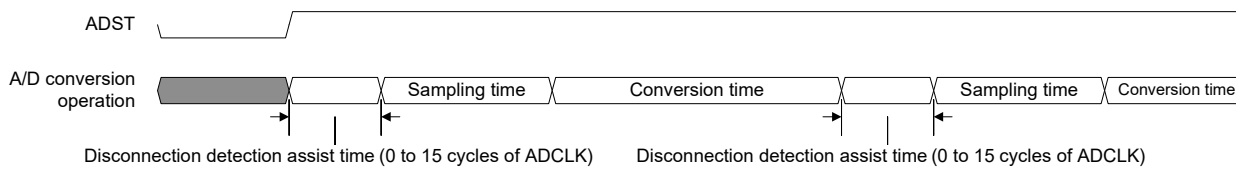

Figure 35.23 Operation of A/D Conversion When the Disconnection Detection Assist Function is Used

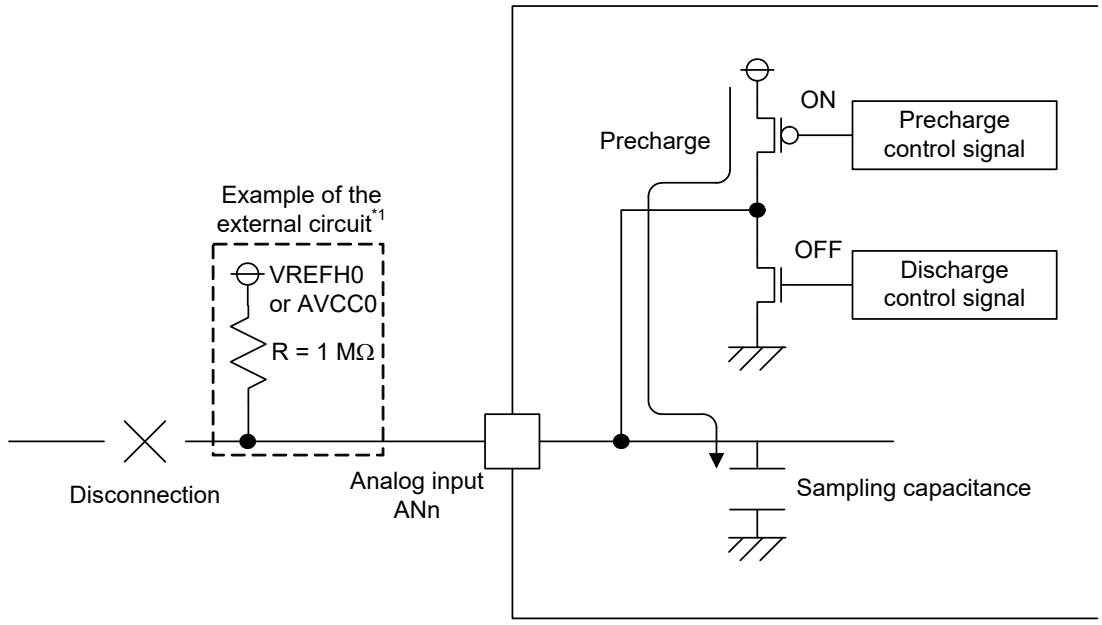

Note 1. The converted result should be used after fully evaluated because the result data when disconnection occurs varies depending on the external circuit.

Figure 35.24 Example of Disconnection Detection When Precharge is Selected

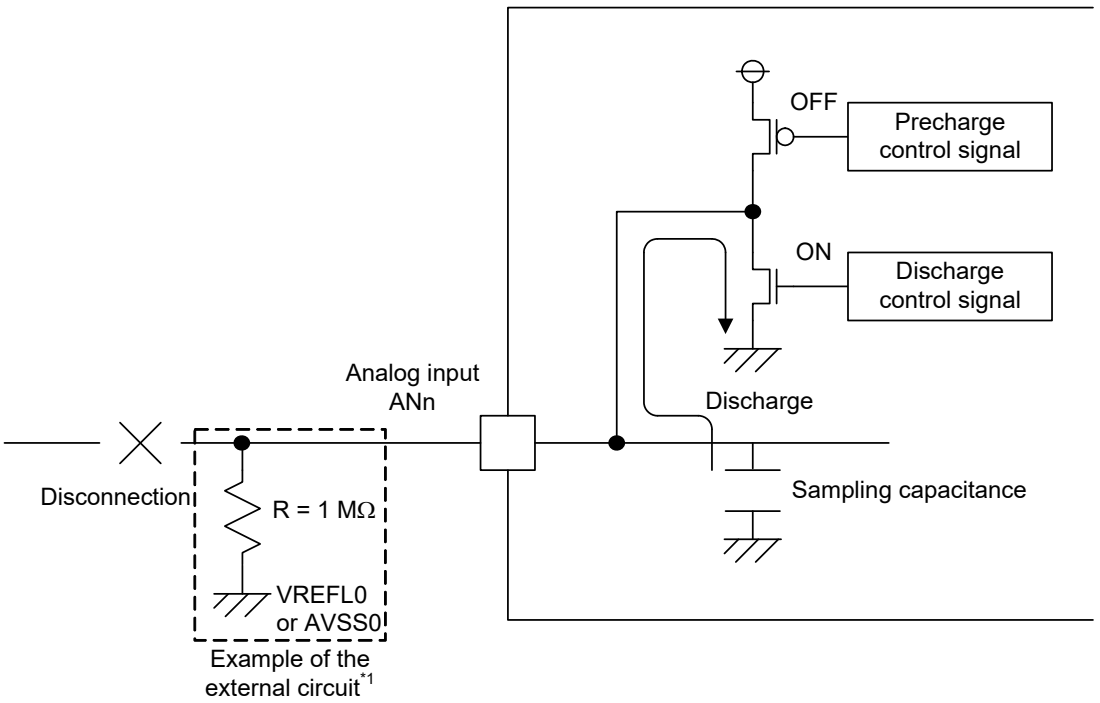

Note 1. The converted result should be used after fully evaluated because the result data when disconnection occurs varies depending on the external circuit.

Figure 35.25 Example of Disconnection Detection When Discharge is Selected

35.3.10 Starting A/D Conversion with Asynchronous Trigger

The A/D conversion can be started by the input of an asynchronous trigger. To start up the A/D converter by an asynchronous trigger, the A/D conversion start trigger select bits (ADSTRGR.TRSA[5:0]) should be set to 000000b, and a high-level signal should be input to the asynchronous trigger (ADTRG0# pin). Then, the ADCSR.TRGE and ADCSR.EXTRG bits should be set to 1. Figure 35.26 shows a timing of the asynchronous trigger input.
For the time from when the ADST bit is set to 1 until conversion starts, refer to section 35.8.3, A/D Conversion Restarting Timing and Termination Timing. An asynchronous trigger cannot be selected for group B used in group scan mode.

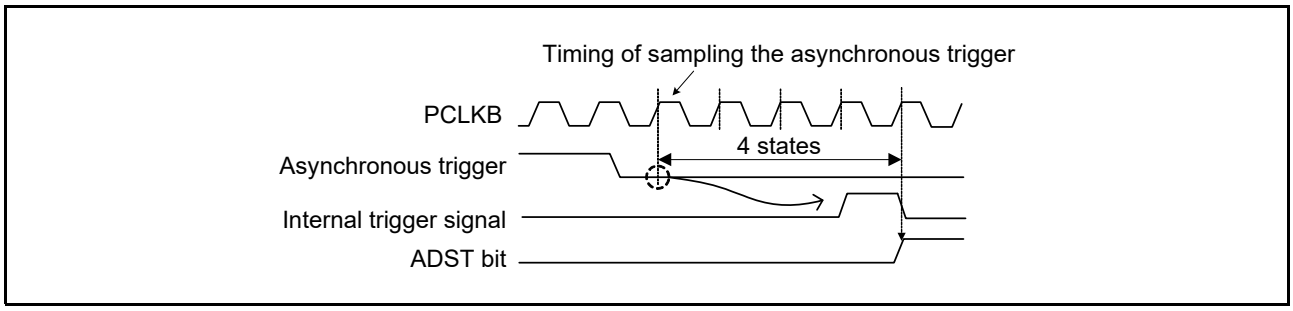

Figure 35.26 Timing of Sampling Asynchronous Trigger

35.3.11 Starting A/D Conversion with Synchronous Trigger from Peripheral Module

The A/D conversion can be started by a synchronous trigger. To start the A/D conversion by a synchronous trigger, the ADCSR.TRGE bit should be set to 1, the ADCSR.EXTRG bit should be cleared to 0, and the relevant sources should be selected by the ADSTRGR.TRSA[5:0] and ADSTRGR.TRSB[5:0] bits.

35.4 Interrupt Sources and DTC/DMA Transfer Requests

35.4.1 Interrupt Requests

The 12-bit A/D converter can send scan end interrupt requests S12ADI0 and GBADI to the CPU.
Setting the ADCSR.ADIE bit to 1 and 0 enables and disables an S12ADI0 interrupt, respectively; similarly, setting the ADCSR.GBADIE bit to 1 and 0 enables and disables a GBADI interrupt, respectively.
In addition, the DTC or DMAC can be activated when an S12ADI0 or a GBADI interrupt is generated. Using an S12ADI0 or a GBADI interrupt to allow the DTC or DMAC to read the converted data enables continuous conversion without burden on software.
For details on DTC settings, see section 18, Data Transfer Controller (DTCa), and for details on DMAC settings, see section 17, DMA Controller (DMACA).

35.5 Event Link Function

35.5.1 Event Output to the ELC

The ELC uses the S12ADI0 interrupt request signal as an event signal (S12ADELC), enabling link operation for the preset module. An event signal is generated under the conditions set by the event link control bits (ADELCCR.ELCC[1:0] bits).
The event signal can be output regardless of the setting of the corresponding interrupt request enable bit.
The 12-bit A/D converter outputs the A/D conversion end event (S12ADELC), window function compare match event (S12ADWMELC), and mismatch event (S12ADWUMELC).
The scan end event (S12ADELC) is output to the ELC at the same time as the interrupt output (S12ADI0) regardless of the ADCSR.ADIE setting.
The compare match/mismatch event (S12ADWMELC/S12ADWUMELC) is output to the ELC with a delay of one PCLKB cycle from the interrupt output (S12ADI0) regardless of the ADCSR.ADIE setting.
When using compare match/mismatch events (S12ADWMELC/S12ADWUMELC) to the ELC, specify single scan mode.

35.5.2 12-Bit A/D Converter Operation by Event from the ELC

The 12-bit A/D converter can be started by the predetermined event by setting the ELSRn register of the ELC.

35.5.3 Note on 12-Bit A/D Converter When an Event Is Input from the ELC

If an event occurs during A/D conversion, the event is disabled.

35.6 Selecting Reference Voltage

For the A/D converter, the high-potential reference voltage can be selected from VREFH0 and AVCC0, and the low-potential reference voltage can be selected from VREFL0 and AVSS0, respectively. Set these before starting A/D conversion. For details of this setting, refer to section 35.2.20, A/D High-Potential/Low-Potential Reference Voltage Control Register (ADHVREFCNT).

35.7 Allowable Impedance of Signal Source

Figure 35.27 shows an equivalent circuit of an analog input pin and an external sensor.

To perform A/D conversion accurately, the internal capacitor (Cs) must be fully charged within the sampling time. If the impedance (R0) of the signal source is high and it takes time to charge Cs, extend the sampling time with the ADSSTRn register. Conversely, if R0 is small, the sampling time can be shortened. Refer to the electrical characteristics for the permissible signal source impedance under various operating conditions.

When converting only a single pin input in single scan mode, the influence of R0 can be ignored because the input load becomes practically only the internal input resistor (Rs) by connecting an external high-capacity capacitor (C). However, because a low-pass filter is formed by R0 and C, it may not possible to follow the analog signal that changes at high speed. Insert a low-impedance buffer when converting high speed analog signals or when converting multiple pins in scan mode.

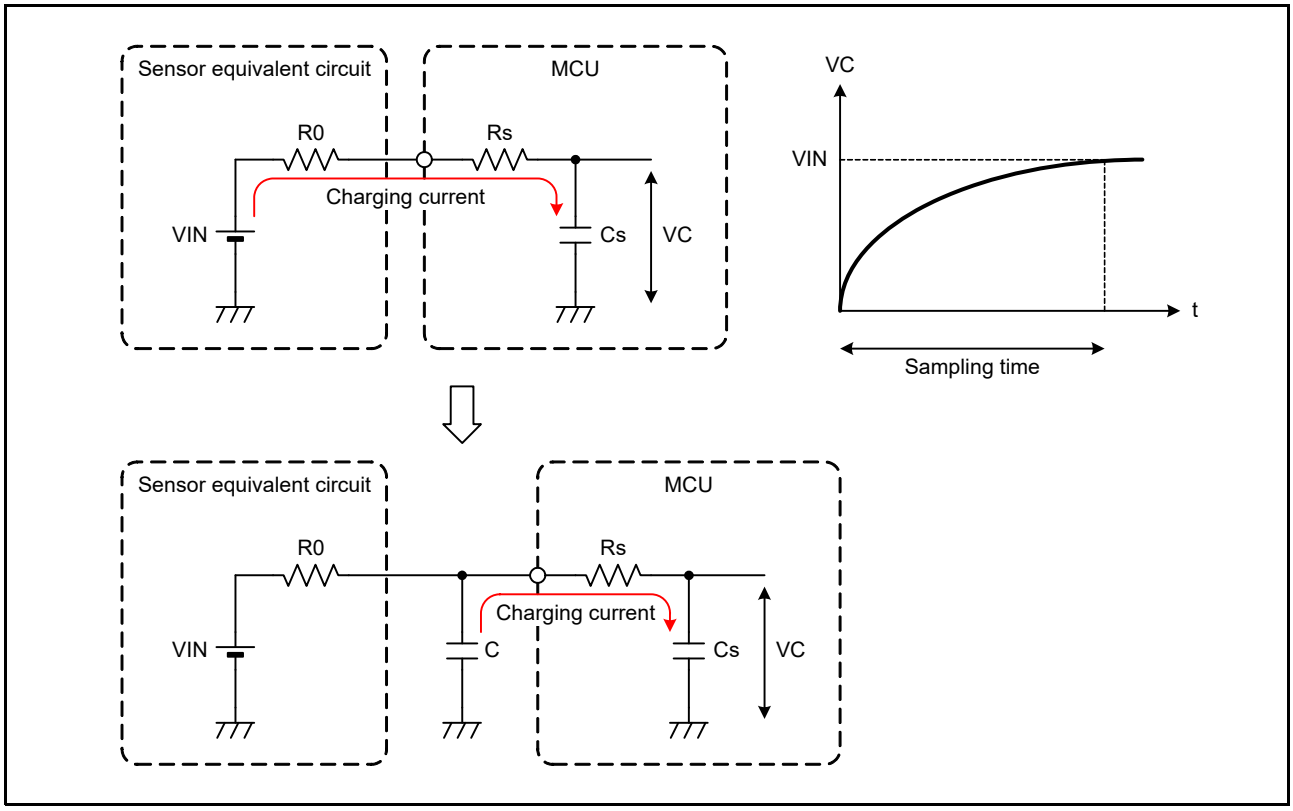

Figure 35.27 Equivalent Circuit of Analog Input Pin and External Sensor

35.8 Usage Notes

35.8.1 Notes on Reading Data Registers

Read the A/D data registers, A/D data duplication register, A/D data duplication register A, A/D data duplication register B, and A/D self-diagnosis data register in word units. If a register is read twice in byte units, that is, the higher-order byte and lower-order byte are separately read, the A/D-converted value having been read first may disagree with the A/D-converted value having been read for the second time. To prevent this, the data registers should never be read in byte units.

35.8.2 Notes on Stopping A/D Conversion

To stop A/D conversion when an asynchronous trigger or a synchronous trigger has been selected as the condition for starting A/D conversion, follow the procedure in Figure 35.28.

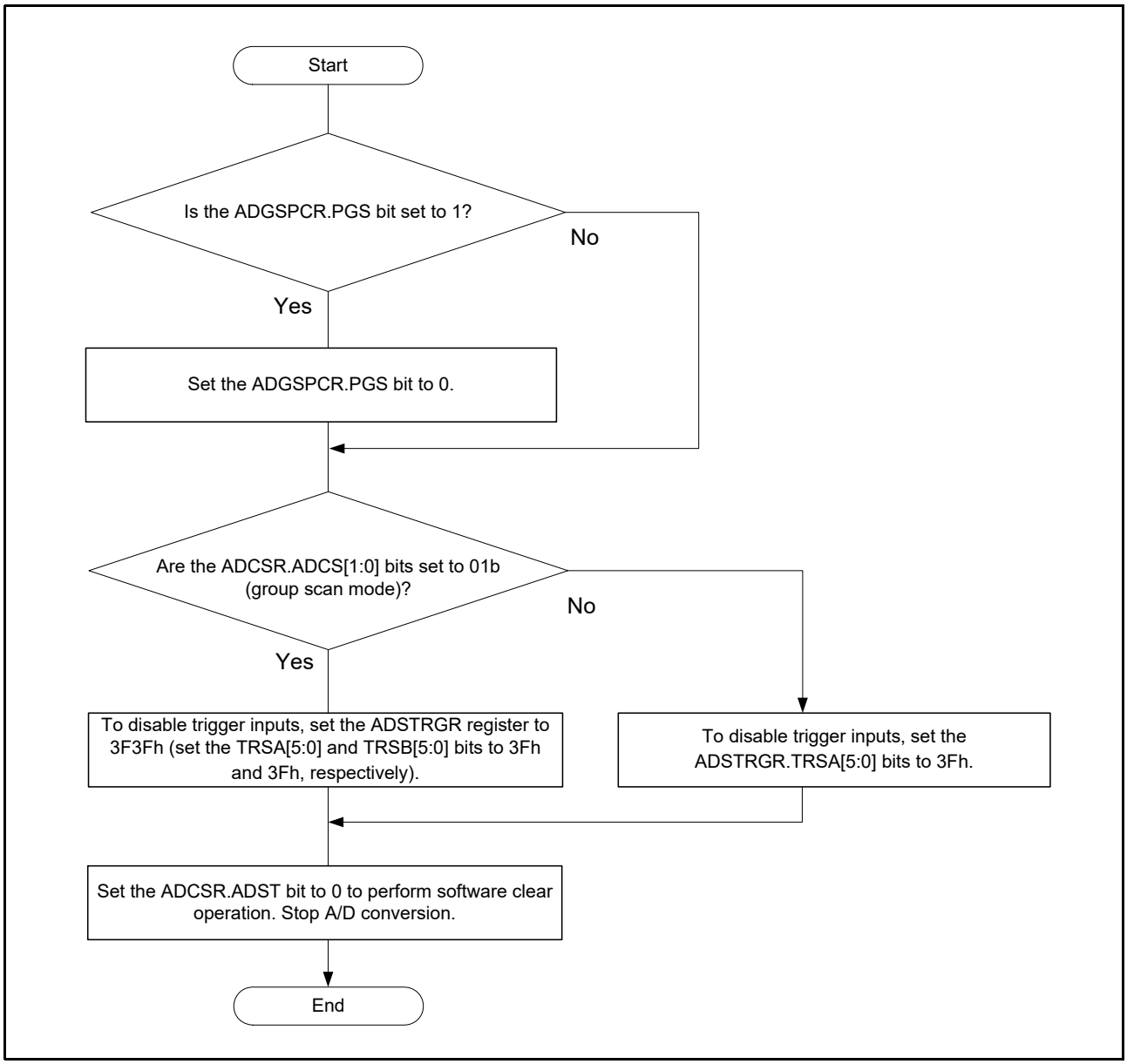

Figure 35.28 Procedure for Clear Operation by Software through the ADCSR.ADST Bit

35.8.3 A/D Conversion Restarting Timing and Termination Timing

It takes a maximum of six ADCLK cycles for the idle analog unit of the 12-bit A/D converter to be restarted by setting the ADCSR.ADST bit to 1. It takes a maximum of three ADCLK cycles (1 PCLKB + 2 ADCLK when ADCLK is faster than PCLKB (PCLKB to ADCLK frequency ratio = 1:2)) for the operating analog unit of the 12-bit A/D converter to be terminated by setting the ADCSR.ADST bit to 0.

35.8.4 Notes on Scan End Interrupt Handling

When scanning the same analog input twice using any trigger, the first A/D-converted data is overwritten with the second A/D-converted data in the case that the CPU does not complete reading the A/D-converted data by the time the A/D conversion of the first analog input for the second scan ends after the first scan end interrupt is generated.

35.8.5 Module Stop Function Setting

Operation of the 12-bit A/D converter can be disabled or enabled by setting module stop control register A (MSTPCRA). The initial setting is for operation of the 12-bit A/D converter to be halted. Register access is enabled by releasing the module stop state.
After the module stop state is released, wait for 1 μs to start A/D conversion. For details, refer to section 11, Low Power Consumption.

35.8.6 Notes on Entering Low Power Consumption States

Before entering the module stop state or software standby mode, make sure to stop A/D conversion. Here, set the ADCSR.ADST bit to 0, and secure certain period of time until the analog unit of the 12-bit A/D converter is stopped. Follow the procedure given below to secure this time.
Follow the procedure for clear operation by software through the ADCSR.ADST bit, shown in Figure 35.28. After that, wait for two clock cycles of ADCLK before entering the peripheral module stop state or software standby mode.

35.8.7 Notes on Canceling Software Standby Mode

After software standby mode is canceled, wait until the crystal oscillation stabilization time or the PLL circuit stabilization time elapses, and then wait for 1 μs before starting A/D conversion. For details, refer to section 11, Low Power Consumption.

35.8.8 Error in Absolute Accuracy When Disconnection Detection Assistance is in Use

Using disconnection detection assistance leads to an error in absolute accuracy of the A/D converter. This is because an error voltage is input to the analog input pins due to the resistive voltage division between the pull-up or pull-down resistor (Rp) and the resistance of the signal source (Rs). This error in absolute accuracy is calculated from the following formula. Only use disconnection detection assistance after thorough evaluation.

Maximum error in absolute accuracy (LSB) = 4095 × Rs / Rp

35.8.9 ADHSC Bit Rewriting Procedure

Before rewriting the A/D conversion select bit (ADCSR.ADHSC) from 0 to 1 or from 1 to 0, the 12-bit A/D converter must be in the standby state. Carry out steps 1 to 3 below to modify the ADCSR.ADHSC bit. After the sleep bit (ADHVREFCNT.ADSLP) is cleared to 0, wait for at least 1 µs and then start A/D conversion.

ADHSC Bit Rewriting Procedure:

1. Set the sleep bit (ADHVREFCNT.ADSLP) to 1.
2. Wait for at least 0.2 µs, and then modify the A/D conversion select bit (ADCSR.ADHSC).
3. Wait for at least 4.8 µs, and then clear the sleep bit (ADHVREFCNT.ADSLP) to 0.

Note: It is prohibited to set the ADHVREFCNT.ADSLP bit to 1 except for modifying the A/D conversion select bit (ADCSR.ADHSC).

35.8.10 Voltage Range of Analog Power Supply Pins

If this MCU is used with the voltages outside the following ranges, the reliability of the MCU may be affected.

- Analog input voltage range
  Voltage applied to analog input pins ANn: AVSS0 ≤ VAN ≤ AVCC0
  Reference voltage range applied to pins VREFH0 and VREFL0: VREFH0 ≤ AVCC0, VREFL0 = AVSS0
  Conversion will not succeed if the voltage applied to analog input pins ANn is greater than VREFH0 (see Figure 35.29).

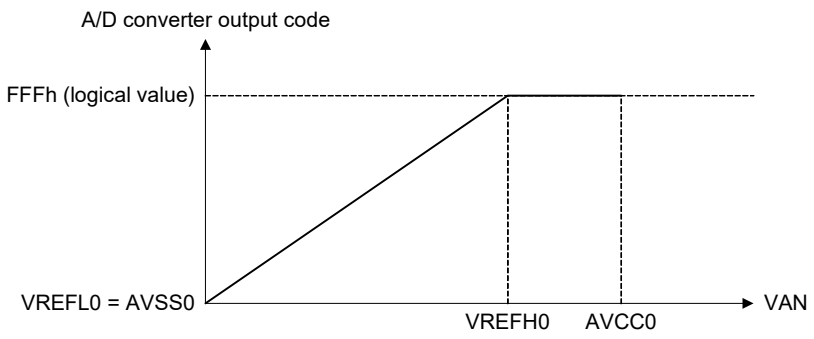

Figure 35.29 Relationship Between Voltage Applied to Analog Input Pins and Output Code

- Relationship between power supply pin pairs (AVCC0–AVSS0, VREFH0–VREFL0, VCC–VSS)
  The following condition should be satisfied: AVSS0 = VSS. A 0.1-µF capacitor should be connected between each pair of power supply pins to create a closed loop with the shortest route possible as shown in Figure 35.30, and connection should be made so that the following conditions are satisfied at the supply side.
  VREFL0 = AVSS0 = VSS

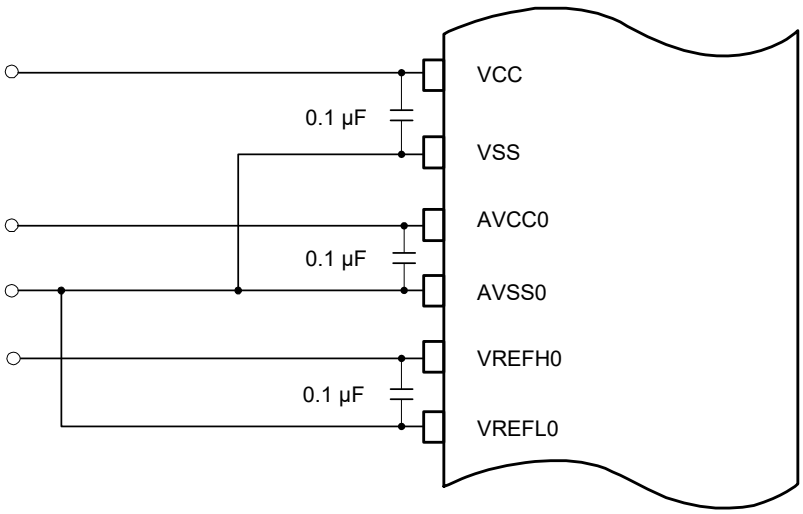

Figure 35.30 Power Supply Pin Connection Example

35.8.11 Notes on Board Design

The board should be designed so that digital circuits and analog circuits are separated from each other as far as possible. In addition, digital circuit signal lines and analog circuit signal lines should not intersect or placed near each other. If these rules are not followed, noise will be produced on analog signals and A/D conversion accuracy will be affected. The analog input pins (AN000 to AN005), reference power supply pin (VREFH0), reference ground pin (VREFL0), and analog power supply (AVCC0) should be separated from digital circuits using the analog ground (AVSS0). The analog ground (AVSS0) should be connected to a stable digital ground (VSS) on the board (single-point ground plane connection).

35.8.12 Notes on Noise Prevention

To prevent the analog input pins (AN000 to AN005) from being destroyed by abnormal voltage such as excessive surge, a capacitor should be inserted between AVCC0 and AVSS0 and between VREFH0 and VREFL0, and a protection circuit should be connected to protect the analog input pins (AN000 to AN005) as shown Figure 35.31.

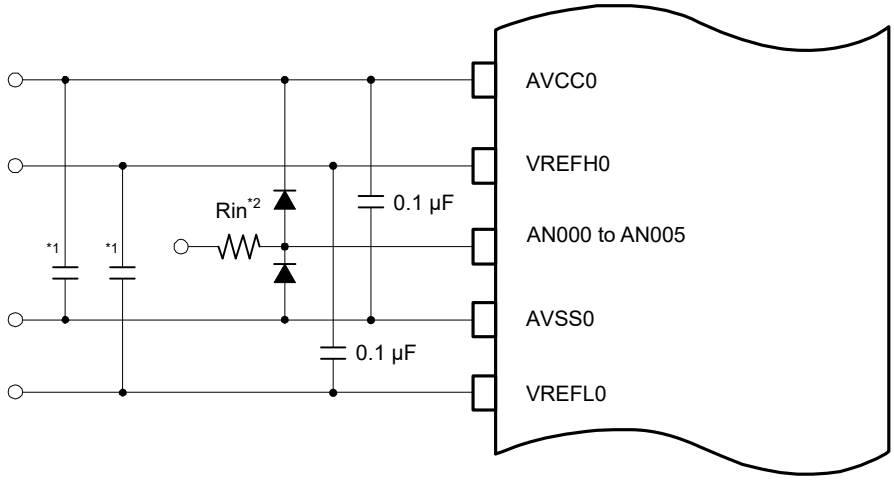

Note 1. The values shown here are reference values.

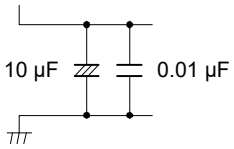

Note 2. Rin: Signal source impedance

Figure 35.31 Sample Protection Circuit for Analog Inputs

35.8.13 Notes on Analog Input Pin Setting

The analog input pin function AN002 is multiplexed on the same pin as the reference power supply ground pin VREFL0. Therefore, when AN002 is to be used, VREFL0 cannot be used. To use AN002, set the low-potential side reference voltage selection bit (LVSEL) to 0.
The analog input pin AN003 is multiplexed on the same pin as the reference power supply pin VREFH0.
Therefore, when AN003 is to be used, VREFH0 cannot be used. To use AN003, set the high-potential side reference voltage selection bits (HVSEL[1:0]) to 00b.
Analog inputs of the 24-bit Delta-Sigma A/D converters (DSAD0 and DSAD1) and the 12-bit A/D converter are not recommended to connect to the same pin and perform A/D conversion at the same time. It may exert an influence on the precision of A/D conversion.
Also, connecting the output of the excitation current source circuit (IEXC) and an analog input of the A/D converter to the same pin may cause the voltage gradient by the internal wiring resistance and excitation current, and may not be able to obtain desired conversion results.

35.8.14 Notes on Setting the Reference Voltage

The reference power supply ground pin VREFL0 is multiplexed on the same pin as the analog input pin AN002. Therefore, when VREFL0 is to be used, AN002 cannot be used. If VREFL0 is to be used, do not select AN002 as an A/D conversion channel.
The reference power supply pin VREFH0 is multiplexed on the same pin as the analog input pin AN003. Therefore, when VREFH0 is to be used, AN003 cannot be used. If VREFH0 is to be used, do not select AN003 as an A/D conversion channel.
If VREFH0 is to be selected as the high-potential side reference voltage, do not set the pin to the analog input (AIN9) of the 24-bit delta-sigma A/D converters (DSAD0 and DSAD1) or the output of the excitation current source circuit (IEXC). If VREFL0 is to be selected as the low-potential side reference voltage, do not set the pin to the analog input (AIN8) of the 24-bit delta-sigma A/D converters (DSAD0 and DSAD1) or the output of the excitation current source circuit (IEXC). Obtaining results of A/D conversion that are as desired may not be possible if the settings are not as advised above.

36. Data Operation Circuit (DOC)

36.1 Overview

The data operation circuit (DOC) is used to compare, add, or subtract 16-bit values.
Table 36.1 lists the specifications of the DOC and Figure 36.1 is a block diagram of the DOC.
An interrupt can be generated if the result of 16-bit comparison meets one of the set interrupt conditions.

Table 36.1 DOC Specifications

Item	Description
Data operation function	16-bit data comparison, addition, and subtraction
Lower power consumption function	The DOC can be placed in a module-stop state.
Interrupts	• The result of data comparison meets the detection condition. • The result of data addition is greater than FFFFh, which is an overflow. • The result of data subtraction is less than 0000h, which is an underflow.
Event link function (output)	• The result of data comparison meets the detection condition. • The result of data addition is greater than FFFFh, which is an overflow. • The result of data subtraction is less than 0000h, which is an underflow.

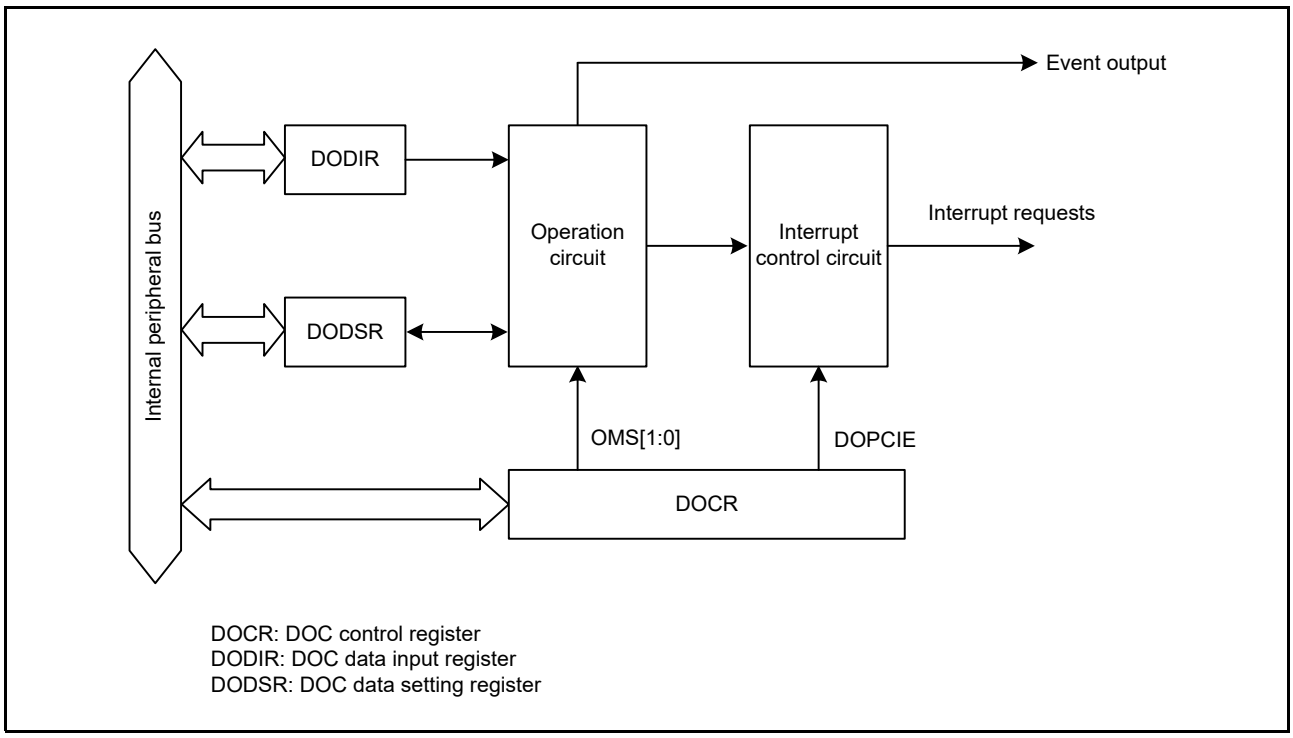

Figure 36.1 DOC Block Diagram

36.2 Register Descriptions

36.2.1 DOC Control Register (DOCR)

Address(es): DOC.DOCR 0008 B080h

	b7	b6	b5	b4	b3	b2	b1	b0
	—	DOPCFCL	DOPCF	DOPCIE	—	DCSEL	OMS[1:0]	
Value after reset:	0	0	0	0	0	0	0	0

Bit	Symbol	Bit Name	Description	R/W
b1, b0	OMS[1:0]	Operating Mode Select	b1 b0 0 0: Data comparison mode 0 1: Data addition mode 1 0: Data subtraction mode 1 1: Setting prohibited	R/W
b2	DCSEL	Detection Condition Select*1	0: 'Not equal to' is to be detected. 1: 'Equal to' is to be detected.	R/W
b3	—	Reserved	This bit is read as 0. The write value should be 0.	R/W
b4	DOPCIE	Data Operation Circuit Interrupt Enable	0: Interrupt disabled 1: Interrupt enabled	R/W
b5	DOPCF	Data Operation Result Flag	Indicates the result of an operation.	R
b6	DOPCFCL	Data Operation Result Clear	0: Retain the value of the DOPCF flag. 1: Clears the DOPCF flag.	R/W
b7	—	Reserved	This bit is read as 0. The write value should be 0.	R/W

Note 1. Valid only when data comparison mode is selected.

The DOCR register specifies the operation of DOC, or enabling or disabling of the interrupt.

OMS[1:0] Bits (Operating Mode Select)

These bits select the operating mode of the DOC.

DCSEL Bit (Detection Condition Select)

This bit is valid only when data comparison mode is selected.
This bit selects the condition for detection in data comparison mode.

DOPCIE Bit (Data Operation Circuit Interrupt Enable)

Setting this bit to 1 enables interrupts from the DOC.

DOPCF Flag (Data Operation Result Flag)

[Setting conditions]

- The condition selected by the DCSEL bit is met
- A result of data addition is greater than FFFFh
- A result of data subtraction is less than 0000h

[Clearing condition]

- Writing 1 to the DOPCFCL bit

DOPCFCL Bit (Data Operation Result Clear)

Writing 1 to this bit clears the DOPCF flag.
This bit is read as 0.

36.2.2 DOC Data Input Register (DODIR)

Address(es): DOC.DODIR 0008 B082h

	b15	b14	b13	b12	b11	b10	b9	b8	b7	b6	b5	b4	b3	b2	b1	b0
Value after reset:	0	0	0	0	0	0	0	0	0	0	0	0	0	0	0	0

The DODIR register is a readable and writable register that holds values for use in operations.

36.2.3 DOC Data Setting Register (DODSR)

Address(es): DOC.DODSR 0008 B084h

	b15	b14	b13	b12	b11	b10	b9	b8	b7	b6	b5	b4	b3	b2	b1	b0
Value after reset:	0	0	0	0	0	0	0	0	0	0	0	0	0	0	0	0

The DODSR register is a readable and writable register that holds values for use in comparison or the results of other operations.
In data comparison mode, store the standard value for use in comparison in this register.
In data addition or data subtraction mode, this register holds the results of operations.

36.3 Operation

36.3.1 Data Comparison Mode

Figure 36.2 shows an example of the steps involved in data comparison mode operation by the DOC.
An example of operation when DCSEL is set to 0 (‘not equal to’ is to be detected as the result of data comparison) is shown below.

(1) Writing 00b to the DOCR.OMS[1:0] bits places the DOC in the data comparison mode.
(2) Specify the standard value for comparison in the DODSR register.
(3) Write the value for comparison in the DODIR register.
(4) Write all values for use in comparison to the DODIR register.
(5) If the value written to the DODIR register is not equal to the value set in the DODSR register, the DOCR.DOPCF flag becomes 1. If the DOCR.DOPCIE bit is 1, a data operation circuit interrupt is also issued.

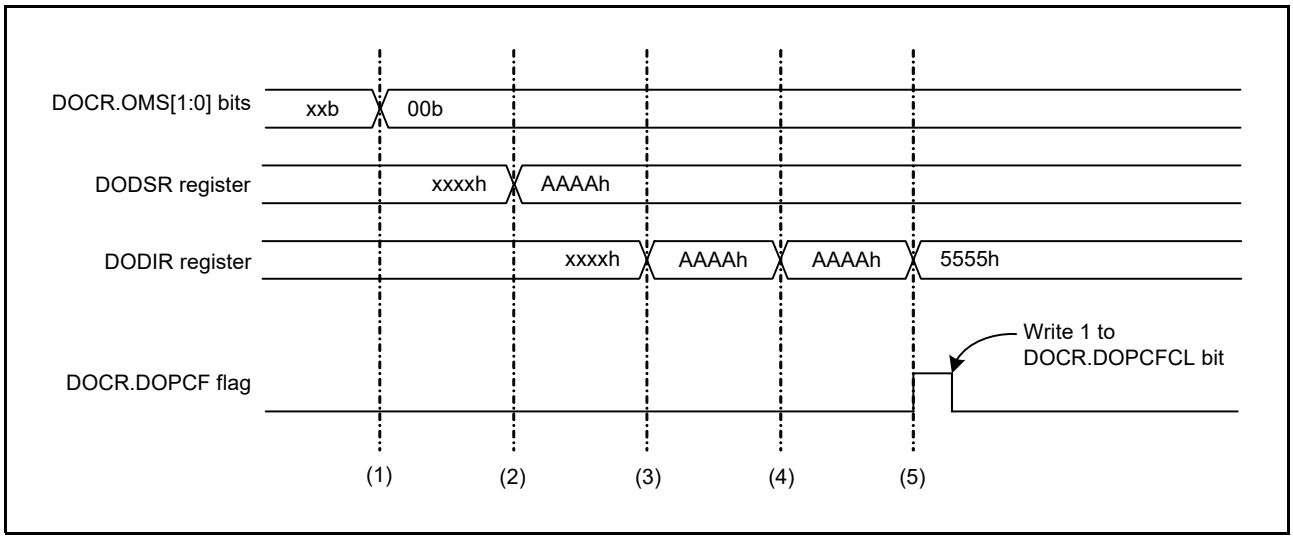

Figure 36.2 Example of Operation in Data Comparison Mode

36.3.2 Data Addition Mode

Figure 36.3 shows an example of the steps involved in data addition mode operation by the DOC.

(1) Writing 01b to the DOCR.OMS[1:0] bits selects data addition mode.
(2) Set the initial value in the DODSR register.
(3) Write the value for addition in the DODIR register. The result of the operation is stored in DODSR.
(4) Write all values for use in addition to the DODIR register.
(5) If the result of the operation is greater than FFFFh, the DOCR.DOPCF flag becomes 1. If the DOCR.DOPCIE bit is 1, a data operation circuit interrupt is also issued.

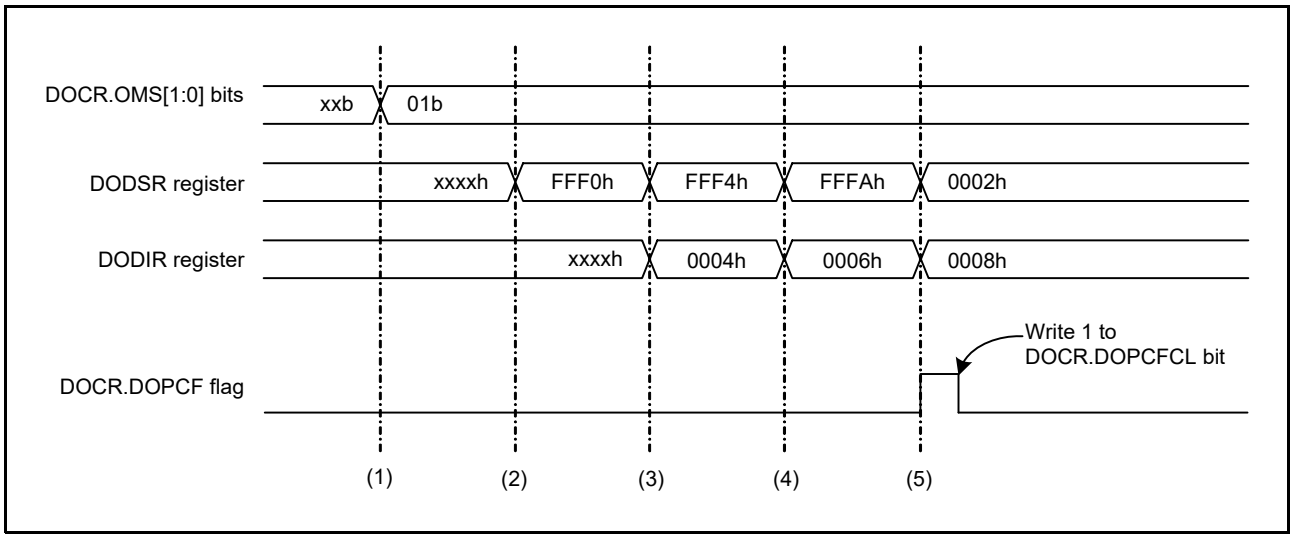

Figure 36.3 Example of Operation in Data Addition Mode

36.3.3 Data Subtraction Mode

Figure 36.4 shows an example of the steps involved in data subtraction mode operation by the DOC.

(1) Writing 10b to the DOCR.OMS[1:0] bits selects data subtraction mode.
(2) Set the initial value in the DODSR register.
(3) Write the value for subtraction in the DODIR register. The result of the operation is stored in DODSR.
(4) Write all values for use in subtraction to the DODIR register.
(5) If the result of the operation is less than 0000h, the DOCR.DOPCF flag becomes 1. If the DOCR.DOPCIE bit is 1, a data operation circuit interrupt is also issued.

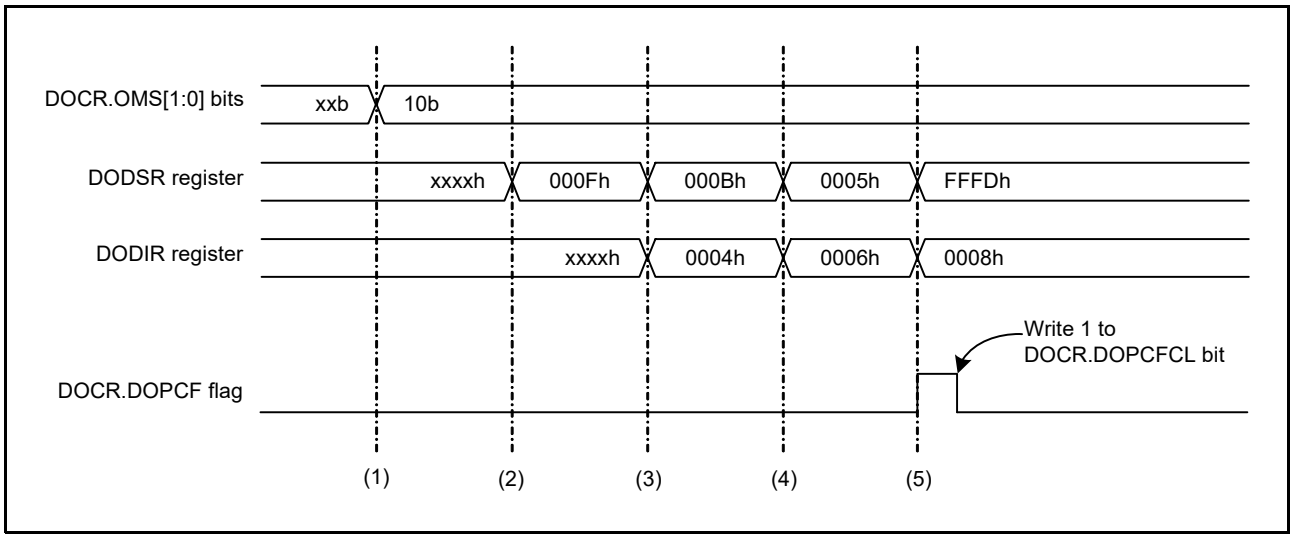

Figure 36.4 Example of Operation in Data Subtraction Mode

36.4 Interrupt Requests

The data operation circuit interrupt (DOPCI) is the interrupt request generated by the DOC. The DOCR.DOPCF flag becomes 1 when the interrupt source condition is satisfied.
Table 36.2 lists the details of the interrupt request.

Table 36.2 Interrupt Request from DOC

Interrupt Request	Data Operation Result Flag	Interrupt Generation Timing
Data operation circuit interrupt (DOPCI)	DOPCF	• The result of data comparison meets the detection condition. • The result of data addition is greater than FFFFh. • The result of data subtraction is less than 0000h.

36.5 Event Link Output

The DOC outputs event signals for the event link controller (ELC) under the following conditions, and these can be used to initiate operations by other modules selected in advance.

- The result of data comparison meets the detection condition.
- The result of data addition is greater than FFFFh.
- The result of data subtraction is less than 0000h.

36.5.1 Interrupt Handling and Event Linking

The DOC has a bit to enable or disable interrupts. When an interrupt source condition is satisfied while the interrupt is enabled, the interrupt request signal is issued to the CPU.
In contrast, an event link output signal is sent to other modules as an event signal via the ELC when an interrupt source is generated, regardless of the setting of the corresponding interrupt enable bit.

36.6 Usage Note

36.6.1 Module Stop Function Setting

Operation of the DOC can be enabled or disabled by setting the MSTPB6 bit in module stop control register B (MSTPCRB). The DOC is initially disabled after a reset. Register access is enabled by releasing the module stop state. For details, refer to section 11, Low Power Consumption.

37. RAM

This MCU has an on-chip high-speed static RAM.

37.1 Overview

Table 37.1 lists the specifications of the RAM.

Table 37.1 Specifications of RAM

Item	Description
Capacity	Max. 32 Kbytes*2
Access	• Single-cycle access is possible for both reading and writing. • On-chip RAM can be enabled or disabled.*1
Low power consumption function	Transitions to the module stopped state are possible.

Note 1. Selectable by the RAME bit in SYSCR1. For details on SYSCR1, see section 3.2.2, System Control Register 1 (SYSCR1).
Note 2. The capacity of RAM differs depending on the products.

RAM Capacity	RAM Address
32 Kbytes	0000 0000h to 0000 7FFFh
16 Kbytes	0000 0000h to 0000 3FFFh

37.2 Operation

37.2.1 Low Power Consumption Function

Power consumption can be reduced by setting module stop control register C (MSTPCRC) to stop supply of the clock signal to the RAM.
Setting the MSTPCRC.MSTPC0 bit to 1 stops supply of the clock signal to RAM.
Stopping supply of the clock signal places the RAM in the module stop state. The RAM operates after initialization by a reset.
The RAM is not accessible in the module stop state. Do not allow transitions to the module stop state while access to RAM is in progress.
For details on the MSTPCRC register, see section 11, Low Power Consumption.

37.2.2 Notes on Self-Diagnosis of the RAM

A write buffer is mounted for the RAM. When the same address is read after a write operation, data in the write buffer, rather than in the memory cell of the RAM may be read. When the RAM is self-diagnosed, confirm that the data have been written by following the procedure below so that data will not be read from the write buffer.

(1) Write data to the address targeted for diagnosis.
(2) Write data to an address which is at least 4 addresses away from the that in (1).
(3) Read the data from the address in (1).

38. Flash Memory (FLASH)

This MCU has packages with 128 and 256 Kbyte flash memory (ROM) for storing code and 8-Kbyte flash memory (E2 DataFlash) for storing data.
In this section, “PCLK” is used to refer to PCLKB.

38.1 Overview

Table 38.1 lists the flash memory specifications.
Table 38.7 lists the I/O pins used in boot mode.

Table 38.1 Flash Memory Specifications

Item	Description
Memory space	• User area: Up to 256 Kbytes • Data area: 8 Kbytes • Extra area: Stores the start-up area information, access window information, and unique ID
Software commands	• The following commands are implemented: Program, blank check, block erase, and all-block erase • The following commands are implemented for programming the extra area: Start-up area information program and access window information program
Value after erasure	• ROM: FFh • E2 DataFlash: FFh
Interrupt	An interrupt (FRDYI) is generated upon completion of software command processing or forced stop processing.
On-board programming	Boot mode (SCI Interface)*1 • Channel 1 of the serial communications interface (SCI1) is used for asynchronous serial communication. • The user area and data area are rewritable. Boot mode (FINE interface)*1 • The FINE is used. • The user area and data area are rewritable. Self-programming in single-chip mode • The user area and data area are rewritable using the flash rewrite routine in the user program.
Off-board programming	The user area and data area are rewritable using a flash programmer compatible with this MCU.
ID code protection	• Connection with the serial programmer can be enabled or disabled using ID codes in boot mode. • Connection with the on-chip debugging emulator can be enabled or disabled using ID codes.
Start-up program protection	This function is used to safely rewrite block 0 to block 7.
Area protection	This function enables rewriting only the selected blocks in the user area and disables the other blocks during self-programming.
Background Operation (BGO)	Programs on the ROM can be executed while rewriting the E2 DataFlash.

Note 1. Refer to the manual of each serial programmer and “Renesas Flash Programmer Flash memory programming software User’s Manual” for more details.

38.2 ROM Area and Block Configuration

The maximum ROM size of this MCU is 256 Kbytes. The ROM area is divided into blocks. A block is 2-Kbyte area. When executing the block erase command, the memory is erased by the block. Figure 38.1 shows the ROM area and block configuration.

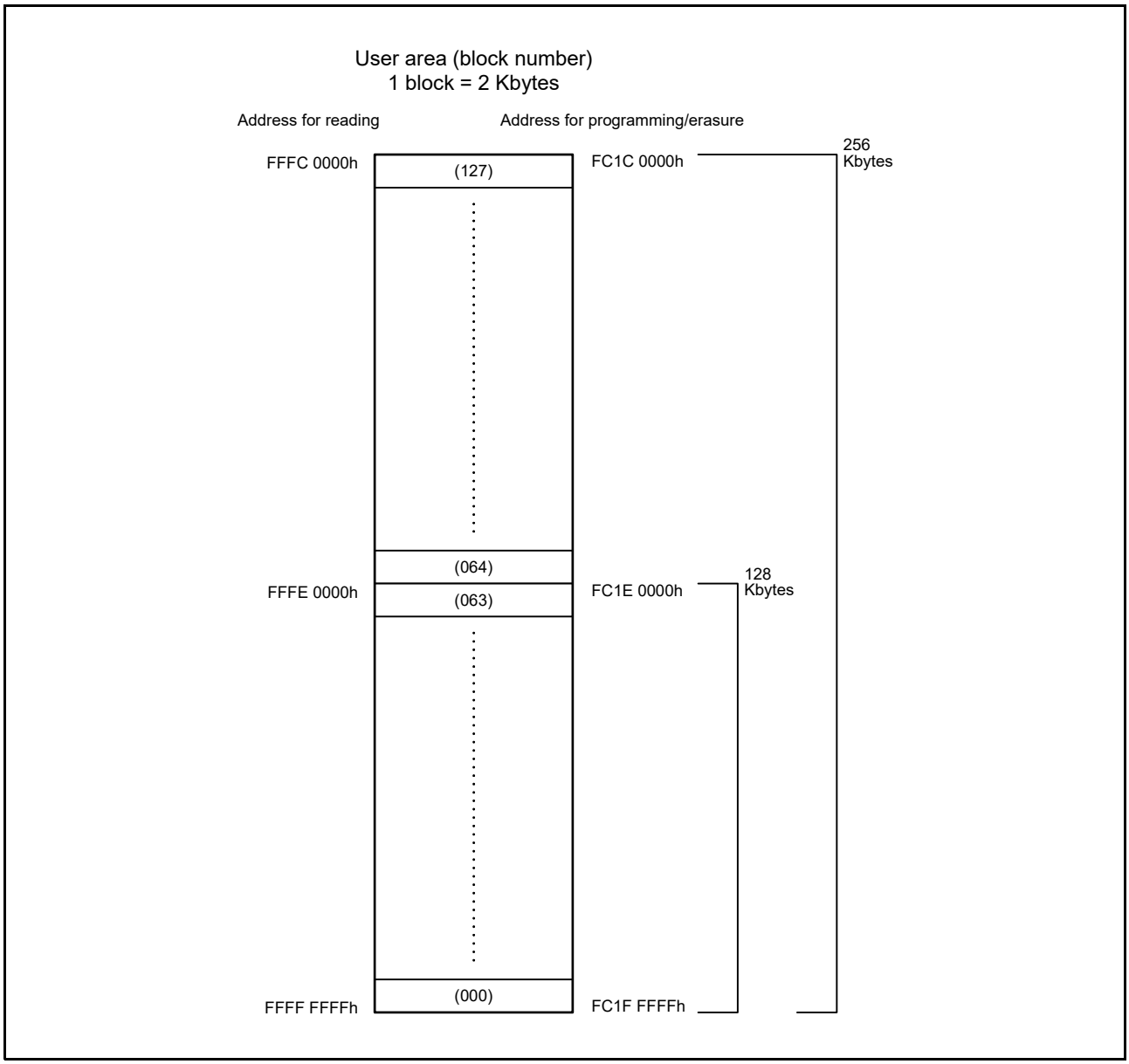

Figure 38.1 ROM Area and Block Configuration

Table 38.2 Correspondence Between ROM Capacity and Addresses for Reading

ROM Capacity	Addresses for Reading
256 Kbytes	FFFC 0000h to FFFF FFFFh
128 Kbytes	FFFE 0000h to FFFF FFFFh

38.3 E2 DataFlash Area and Block Configuration

The E2 DataFlash is 8 Kbytes in the MCU. The E2 DataFlash is divided into blocks and erased in block units. Figure 38.2 shows the E2 DataFlash area and the block configuration.

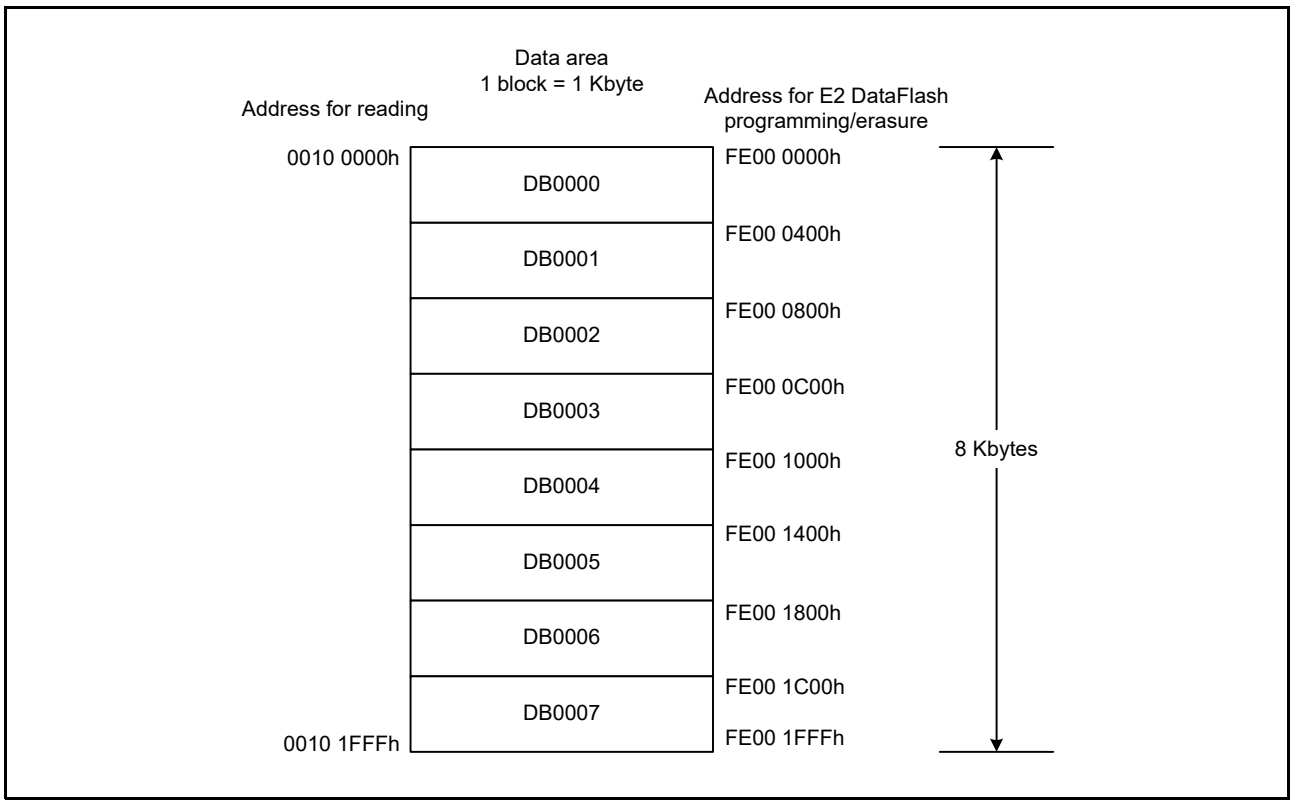

Figure 38.2 E2 DataFlash Area and Block Configuration

38.4 Register Descriptions

38.4.1 E2 DataFlash Control Register (DFLCTL)

Address(es): FLASH.DFLCTL 007F C090h

	b7	b6	b5	b4	b3	b2	b1	b0
	—	—	—	—	—	—	—	DFLEN
Value after reset:	0	0	0	0	0	0	0	0

Bit	Symbol	Bit Name	Description	R/W
b0	DFLEN	E2 DataFlash Access Enable	0: Access to E2 DataFlash and access to the extra area in P/E mode*1 disabled 1: Access to E2 DataFlash and access to the extra area in P/E mode*1 enabled	R/W
b7 to b1	—	Reserved	These bits are read as 0. The write value should be 0.	R/W

Note 1. Start-up area information program and access window information program

The DFLCTL register is used to enable or disable access (read, program, and erase) to the E2 DataFlash and access (start-up area information program and access window information program) to the extra area in P/E mode.
When reading, programming, and erasing the E2 DataFlash, set the DFLCTL.DFLEN bit to 1 and wait for the E2 DataFlash STOP recovery time (tDSTOP) to elapse before reading the E2 DataFlash and entering E2 DataFlash P/E mode. Do not read the E2 DataFlash or enter E2 DataFlash P/E mode until tDSTOP has elapsed.
Refer to section 38.7.1, Sequencer Modes for details on E2 DataFlash P/E mode. Refer to section 39, Electrical Characteristics for E2 DataFlash STOP recovery time (tDSTOP).

38.4.2 Flash P/E Mode Entry Register (FENTRYR)

Address(es): FLASH.FENTRYR 007F FFB2h

	b15	b14	b13	b12	b11	b10	b9	b8	b7	b6	b5	b4	b3	b2	b1	b0
	FEKEY[7:0]								FENTRYD	—	—	—	—	—	—	FENTRY0
Value after reset:	0	0	0	0	0	0	0	0	0	0	0	0	0	0	0	0

Bit	Symbol	Bit Name	Description	R/W
b0	FENTRY0	ROM P/E Mode Entry 0	0: ROM is in read mode. 1: ROM can be placed in P/E mode.	R/W
b6 to b1	—	Reserved	These bits are read as 0. The write value should be 0.	R/W
b7	FENTRYD	E2 DataFlash P/E Mode Entry	0: E2 DataFlash is in read mode. 1: E2 DataFlash can be placed in P/E mode.	R/W
b15 to b8	FEKEY[7:0]	Key Code	The FEKEY[7:0] bits are used to control rewriting of the FENTRYR register. When rewriting the value of the lower 8 bits, set the FEKEY[7:0] bits to AAh at the same time (write this register in 16 bits). The FEKEY[7:0] bits are read as 00h.	R/W

To rewrite the ROM or E2 DataFlash, the FENTRYD or FENTRY0 bit must be set to 1 to place the ROM or E2 DataFlash in P/E mode.
When returning to read mode, set the FENTRYR register and confirm that its value has been rewritten before reading the ROM or E2 DataFlash.
Refer to section 38.7.1, Sequencer Modes for details on P/E mode and read mode.

FENTRY0 Bit (ROM P/E Mode Entry 0)

This bit is used to place the ROM in P/E mode.
[Setting condition]

- AA01h is written to the FENTRYR register when the FENTRYR register is 0000h.

Note: When entering ROM P/E mode, the instruction fetch address must be transferred to an area other than the ROM so that instruction fetching is not executed to the ROM. Copy necessary instruction code to the internal RAM and jump to the RAM. Note that E2 DataFlash can be rewritten by a program in the ROM.

[Clearing condition]

- AA00h is written to the FENTRYR register.

FENTRYD Bit (E2 DataFlash P/E Mode Entry)

This bit is used to place the E2 DataFlash in P/E mode.
[Setting condition]

- AA80h is written to the FENTRYR register when the FENTRYR register is 0000h.

[Clearing condition]

- AA00h is written to the FENTRYR register.

38.4.3 Protection Unlock Register (FPR)

Address(es): FLASH.FPR 007F C180h

	b7	b6	b5	b4	b3	b2	b1	b0
Value after reset:	x	x	x	x	x	x	x	x

x: Undefined

This write-only register is used to protect the FPMCR register from being rewritten inadvertently when the CPU runs out of control. Writing to the FPMCR register is enabled only when the following procedure is used to access the register.

Procedure to unlock protection

(1) Write A5h to the FPR register.
(2) Write a set value to the FPMCR register.
(3) Write the inverted set value to the FPMCR register.
(4) Write a set value to the FPMCR register again.

When a procedure other than the above is used to write data, the FPSR.PERR flag is set to 1.

38.4.4 Protection Unlock Status Register (FPSR)

Address(es): FLASH.FPSR 007F C184h

	b7	b6	b5	b4	b3	b2	b1	b0
	—	—	—	—	—	—	—	PERR
Value after reset:	0	0	0	0	0	0	0	0

Bit	Symbol	Bit Name	Description	R/W
b0	PERR	Protect Error Flag	0: No error 1: An error occurs.	R
b7 to b1	—	Reserved	These bits are read as 0.	R

PERR Flag (Protect Error Flag)

When the FPMCR register is not accessed as described in the procedure to unlock protection, data is not written to the register and this flag is set to 1.

[Setting condition]

- The FPMCR register is not accessed as described in the procedure to unlock protection.

[Clearing condition]

- The FPMCR register is accessed according to the procedure to unlock protection described in section 38.4.3, Protection Unlock Register (FPR).

38.4.5 Flash P/E Mode Control Register (FPMCR)

Address(es): FLASH.FPMCR 007F C100h

	b7	b6	b5	b4	b3	b2	b1	b0
	FMS2	LVPE	—	FMS1	RPDIS	—	FMS0	—
Value after reset:	0	0	0	0	1	0	0	0

Bit	Symbol	Bit Name	Description	R/W
b0	—	Reserved	This bit is read as 0. The write value should be 0.	R/W
b1	FMS0	Flash Operating Mode Select 0	FMS2 FMS1 FMS0 0 0 0: ROM/E2 DataFlash read mode 0 1 0: E2 DataFlash P/E mode 0 1 1: Discharge mode 1 1 0 1: ROM P/E mode 1 1 1: Discharge mode 2 Settings other than above are prohibited.	R/W
b2	—	Reserved	This bit is read as 0. The write value should be 0.	R/W
b3	RPDIS	ROM P/E Disable	0: ROM programming/erasure enabled 1: ROM programming/erasure disabled	R/W
b4	FMS1	Flash Operating Mode Select 1	See the FMS0 bit.	R/W
b5	—	Reserved	This bit is read as 0. The write value should be 0.	R/W
b6	LVPE	Low-Voltage P/E Mode Enable	0: Low-voltage P/E mode disabled 1: Low-voltage P/E mode enabled	R/W
b7	FMS2	Flash Operating Mode Select 2	See the FMS0 bit.	R/W

The FPMCR register is used to set the operating mode of the flash memory.
This register is protected. Set its value using the procedure to unlock protection. For details, refer to section 38.4.3, Protection Unlock Register (FPR).
When entering discharge mode 2 or ROM P/E mode, or during either of these modes, an instruction must be executed on the RAM.

FMS0, FMS1, and FMS2 Bits (Flash Operating Mode Select 0 to Flash Operating Mode Select 2)

These bits are used to set the operating mode of the flash memory.

- Transition from read mode to ROM P/E mode
  Set the FMS2 bit = 0, the FMS1 bit = 1, the FMS0 bit = 1, and the RPDIS bit = 0.
  Wait for ROM mode transition wait time 1 (tDIS, refer to section 39, Electrical Characteristics).
  Set the FMS2 bit = 1, the FMS1 bit = 1, the FMS0 bit = 1, and the RPDIS bit = 0.
  Set the FMS2 bit = 1, the FMS1 bit = 0, the FMS0 bit = 1, and the RPDIS bit = 0.
  Wait for ROM mode transition wait time 2 (tMS, refer to section 39, Electrical Characteristics).
- Transition from ROM P/E mode to read mode
  Set the FMS2 bit = 1, the FMS1 bit = 1, the FMS0 bit = 1, and the RPDIS bit = 0.
  Wait for ROM mode transition wait time 1 (tDIS, refer to section 39, Electrical Characteristics).
  Set the FMS2 bit = 0, the FMS1 bit = 1, the FMS0 bit = 1, and the RPDIS bit = 0.
  Set the FMS2 bit = 0, the FMS1 bit = 0, the FMS0 bit = 0, and the RPDIS bit = 1.
  Wait for ROM mode transition wait time 2 (tMS, refer to section 39, Electrical Characteristics).
- Transition from read mode to E2 DataFlash P/E mode
  Set the FMS2 bit = 0, the FMS1 bit = 1, the FMS0 bit = 0, and the RPDIS bit = 0.
- Transition from E2 DataFlash P/E mode to read mode
  Set the FMS2 bit = 0, the FMS1 bit = 0, the FMS0 bit = 0, and the RPDIS bit = 1.

Wait for ROM mode transition wait time 2 (tMS, refer to section 39, Electrical Characteristics).

RPDIS Bit (ROM P/E Disable)

This bit is used to disable the execution of ROM programming/erasure with software.

LVPE Bit (Low-Voltage P/E Mode Enable)

Set this bit to 0 for programming/erasure in high-speed mode, and set this bit to 1 for programming/erasure in middle-speed mode.

38.4.6 Flash Initial Setting Register (FISR)

Address(es): FLASH.FISR 007F C1D8h

	b7	b6	b5	b4	b3	b2	b1	b0
	SAS[1:0]		—	PCKA[4:0]				
Value after reset:	0	0	0	0	0	0	0	0

Bit	Symbol	Bit Name	Description	R/W
b4 to b0	PCKA[4:0]	Peripheral Clock Notification	These bits are used to set the frequency of the FlashIF clock (FCLK).	R/W
b5	—	Reserved	This bit is read as 0. The write value should be 0.	R/W
b7, b6	SAS[1:0]	Start-Up Area Select	b7 b6 0 x: The start-up area is selected according to the start-up area settings of the extra area. 1 0: The start-up area is switched to the default area temporarily. 1 1: The start-up area is switched to the alternate area temporarily.	R/W

x: Don't care

Data can be written to the FISR register in ROM P/E mode or E2 DataFlash P/E mode.

PCKA[4:0] Bits (Peripheral Clock Notification)

These bits are used to set the frequency of the FlashIF clock (FCLK) when programming/erasing the ROM/E2 DataFlash.

Set the FCLK frequency in the PCKA[4:0] bits before programming/erasure. Do not change the frequency during programming/erasure of the ROM/E2 DataFlash.

- When FCLK is higher than 4 MHz
  Set a rounded-up value for a non-integer frequency.
  For example, set 32 MHz (PCKA[4:0] bits = 11111b) when the frequency is 31.5 MHz.
- When FCLK is 4 MHz or lower
  Do not use a non-integer frequency.
  Use the FCLK at a frequency of 1, 2, 3, or 4 MHz.

Note: When the PCKA[4:0] bits are set to a frequency different from the FCLK, the data in the ROM/E2 DataFlash may be damaged.

Table 38.3 Example of FlashIF Clock Frequency Settings

FlashIF Clock Frequency (MHz)	PCKA[4:0] Bit Setting	FlashIF Clock Frequency (MHz)	PCKA[4:0] Bit Setting	FlashIF Clock Frequency (MHz)	PCKA[4:0] Bit Setting
32	11111b	31	11110b	30	11101b
29	11100b	28	11011b	27	11010b
26	11001b	25	11000b	24	10111b
23	10110b	22	10101b	21	10100b
20	10011b	19	10010b	18	10001b
17	10000b	16	01111b	15	01110b
14	01101b	13	01100b	12	01011b
11	01010b	10	01001b	9	01000b
8	00111b	7	00110b	6	00101b
5	00100b	4	00011b	3	00010b
2	00001b	1	00000b	—	—

SAS[1:0] Bits (Start-Up Area Select)

These bits are used to select the start-up area. To change the start-up area, the following three methods can be used.

- When selecting the start-up area according to the start-up area settings of the extra area
  With the SAS[1:0] bits set to 00b or 01b, the start-up area is selected according to the start-up area settings of the extra area. The settings are enabled after a reset is released.
- When switching the start-up area to the default area temporarily
  When 10b is written to the SAS[1:0] bits, the start-up area is switched to the default area immediately after data is written to the register, regardless of the start-up area settings of the extra area.
  When a reset is generated after this, the area is selected according to the start-up area settings of the extra area.
- When switching the start-up area to the alternative area temporarily
  When 11b is written to the SAS[1:0] bits, the start-up area is switched to the alternative area, regardless of the start-up area settings of the extra area.
  When a reset is generated after this, the area is selected according to the start-up area settings of the extra area.

38.4.7 Flash Reset Register (FRESETR)

Address(es): FLASH.FRESETR 007F C124h

	b7	b6	b5	b4	b3	b2	b1	b0
	—	—	—	—	—	—	—	FRESET
Value after reset:	0	0	0	0	0	0	0	0

Bit	Symbol	Bit Name	Description	R/W
b0	FRESET	Flash Reset	0: Flash control circuit reset is released. 1: Flash control circuit is reset.	R/W
b7 to b1	—	Reserved	These bits are read as 0. The write value should be 0.	R/W

FRESET Bit (Flash Reset)

When this bit is set to 1, registers FASR, FSARH, FSARL, FEARH, FEARL, FWB0, FWB1, FWB2, FWB3, FCR, and FEXCR are reset. Also, the values of registers FEAMH and FEAML are undefined. Do not access these registers during a reset. To release the reset, set this bit to 0.

Do not write to this register while executing a software command or rewriting the extra area.

38.4.8 Flash Area Select Register (FASR)

Address(es): FLASH.FASR 007F C104h

	b7	b6	b5	b4	b3	b2	b1	b0
	—	—	—	—	—	—	—	EXS
Value after reset:	0	0	0	0	0	0	0	0

Bit	Symbol	Bit Name	Description	R/W
b0	EXS	Extra Area Select	0: User area or data area 1: Extra area	R/W
b7 to b1	—	Reserved	These bits are read as 0. The write value should be 0.	R/W

Data can be written to the FASR register in ROM P/E mode or E2 DataFlash P/E mode.

This register is initialized by a reset or setting the FRESETR.FRESET bit to 1.

Data cannot be written to this register while the FRESETR.FRESET bit is 1.

EXS Bit (Extra Area Select)

Set this bit to 1 before issuing a software command (start-up area information program or access window information program) for the extra area. Set this bit to 0 before issuing a software command (program, blank check, block erase, or all-block erase) for the user area.

After issuing a software command, do not change the value until changing it for issuing the next software command.

38.4.9 Flash Control Register (FCR)

Address(es): FLASH.FCR 007F C114h

	b7	b6	b5	b4	b3	b2	b1	b0
	OPST	STOP	—	—	CMD[3:0]			
Value after reset:	0	0	0	0	0	0	0	0

Bit	Symbol	Bit Name	Description	R/W
b3 to b0	CMD[3:0]	Software Command Setting	b3 b0 0 0 0 1: Program 0 0 1 1: Blank check 0 1 0 0: Block erase 0 1 1 0: All-block erase Settings other than above are prohibited.*1	R/W
b5, b4	—	Reserved	These bits are read as 0. The write value should be 0.	R/W
b6	STOP	Forced Processing Stop	When this bit is set to 1, the processing being executed can be forcibly stopped.	R/W
b7	OPST	Processing Start	0: Processing stops. 1: Processing starts.	R/W

Note 1. This does not include set the FCR register to 00h when the FSTATR1.FRDY flag is 1.

Data can be written to the FCR register when in ROM P/E mode and the ROM can be programmed/erased or in E2 DataFlash P/E mode.
This register is initialized by a reset or setting the FRESETR.FRESET bit to 1. Data cannot be written to this register while the FRESETR.FRESET bit is 1.
Note that this register cannot be initialized by the FRESETR.FRESET bit while a software command is being executed.

CMD[3:0] Bits (Software Command Setting)

These bits are used to set a software command (program, blank check, block erase, or all-block erase).
The function of each command is described below.

- Program
  Write the value set in registers FWB0, FWB1, FWB2, and FWB3 to the address set in registers FSARH and FSARL.
- Blank check
  Check whether there is data in the area from the address set in registers FSARH and FSARL to the address set in registers FEARH and FEARL. Confirm that data is not programmed in the area. This command does not guarantee whether the area remains erased.
- Block erase
  Erase consecutive areas specified in the flash memory by the blocks. Set the beginning address of the block in registers FSARH and FSARL and the end address in registers FEARH and FEARL.
- All-block erase
  Erase all blocks in the ROM or E2 DataFlash.
  All-block erase requires less time to erase the memory compared to block erase. When erasing the whole of the ROM area, set the beginning address of the ROM area in registers FSARH and FSARL, and the end address in registers FEARH and FEARL. Table 38.4 lists the setting address for all-block erase.

Table 38.4 Setting Address for All-Block Erase

Target	Memory Size	FSARH/FSARL	FEARH/FEARL
ROM	256 Kbytes	FC1C 0000h	FC1F FFF8h
	128 Kbytes	FC1E 0000h	FC1F FFF8h
E2 DataFlash	8 Kbytes	FE00 0000h	FE00 1FFFh

STOP Bit (Forced Processing Stop)

This bit is used to forcibly stop the processing (blank check, block erase, or all-block erase) being executed.
After setting this bit to 1, wait until the FSTATR1.FRDY flag is 1 (processing completed) before setting the OPST bit to 0.

OPST Bit (Processing Start)

This bit is used to execute the command set in the CMD[3:0] bits.
This bit is not set to 0 again even when the processing is completed. Confirm that the FSTATR1.FRDY flag is 1 (processing completed) before setting the OPST bit to 0 again. After that, confirm that the FRDY flag is 0 before executing the next processing.

38.4.10 Flash Extra Area Control Register (FEXCR)

Address(es): FLASH.FEXCR 007F C1DCh

	b7	b6	b5	b4	b3	b2	b1	b0
	OPST	—	—	—	—	CMD[2:0]		
Value after reset:	0	0	0	0	0	0	0	0

Bit	Symbol	Bit Name	Description	R/W
b2 to b0	CMD[2:0]	Software Command Setting	b2 b0 0 0 1: Start-up area information program 0 1 0: Access window information program Settings other than above are prohibited.*1	R/W
b6 to b3	—	Reserved	These bits are read as 0. The write value should be 0.	R/W
b7	OPST	Processing Start	0: Processing stops. 1: Processing starts.	R/W

Note 1. This does not include set the FEXCR register to 00h when the FSTATR1.EXRDY flag is 1.

Data can be written to the FEXCR register when in ROM P/E mode and the ROM can be programmed/erased.
This register is initialized by a reset or setting the FRESETR.FRESET bit to 1. Data cannot be written to this register while the FRESETR.FRESET bit is 1.
Note that this register cannot be initialized by the FRESETR.FRESET bit while a software command is being executed.

CMD[2:0] Bits (Software Command Setting)

These bits are used to set a software command (start-up area information program or access window information program).
The details of each command are described below.

- Start-up area information program
  This command is used to switch the start-up area used for start-up program protection.
  When setting the start-up area to the default area, set the FWB1 and FWB0 registers to FFFFh, and execute this command.
  When setting the start-up area to the alternative area, set the FWB1 register to FFFFh, set the FWB0 register to FEFFh, and execute this command.
  When the FWB1 and FWB0 registers are set to values other than the above, do not execute the start-up area information program.
- Access window information program
  This command is used to set the access window used for area protection.
  Set the access window in block units.
  Specify the access window start address, which is the beginning address of the access window in the FWB0 register, specify the access window end address, which is the next address of the last address of the access window in the FWB1 register, and issue this command. Set bit 21 to bit 10 of the address for programming/erasure in each register.
  If the same value is set as the start address and end address, all areas can be accessed. Do not set the start address to a value larger than the value of the end address.

OPST Bit (Processing Start)

This bit is used to execute the command set in the CMD[2:0] bits.
This bit is not set to 0 again even when the processing is completed. Confirm that the FSTATR1.EXRDY flag is 1 (processing completed) before setting the OPST bit to 0 again. After that, confirm that the FSTATR1.EXRDY flag is 0 before executing the next processing.

Writing to the extra area is started by writing 1 to the OPST bit. Do not write to the CMD[2:0] bits while a software command is being executed.

38.4.11 Flash Processing Start Address Register H (FSARH)

Address(es): FLASH.FSARH 007F C110h

	b15	b14	b13	b12	b11	b10	b9	b8	b7	b6	b5	b4	b3	b2	b1	b0
								—	—	—	—					
Value after reset:	0	0	0	0	0	0	0	0	0	0	0	0	0	0	0	0

The FSARH register is used to set the target processing address or the start address of the target processing range in the flash memory when a software command is executed.
Set bit 31 to bit 25 and bit 20 to bit 16 of the flash memory address for programming/erasure in this register.
Data can be written to this register in ROM P/E mode or E2 DataFlash P/E mode.
This register is initialized by a reset or setting the FRESETR.FRESET bit to 1. Data cannot be written to this register while the FRESETR.FRESET bit is 1.
If this register is read while executing a software command set by the FEXCR register, an undefined value is read.
Refer to Figure 38.1 and Figure 38.2 for details on the addresses of the flash memory.

38.4.12 Flash Processing Start Address Register L (FSARL)

Address(es): FLASH.FSARL 007F C108h

	b15	b14	b13	b12	b11	b10	b9	b8	b7	b6	b5	b4	b3	b2	b1	b0
Value after reset:	0	0	0	0	0	0	0	0	0	0	0	0	0	0	0	0

The FSARL register is used to set the target processing address or the start address of the target processing range in the flash memory when a software command is executed.
Set bit 15 to bit 0 of the flash memory address for programming/erasure in this register.
When the target is the ROM, set bit 2 to bit 0 to 000b.
Data can be written to this register in ROM P/E mode or E2 DataFlash P/E mode.
This register is initialized by a reset or setting the FRESETR.FRESET bit to 1. Data cannot be written to this register while the FRESETR.FRESET bit is 1.
This register is incremented by 8h if the ROM is specified and 1h if the E2 DataFlash is specified after a program command is executed. Therefore, it is not necessary to set the target address to be written to this register when executing a program command sequentially.
If this register is read while executing a software command set by the FEXCR register, an undefined value is read.
Refer to Figure 38.1 and Figure 38.2 for details on the addresses of the flash memory.

38.4.13 Flash Processing End Address Register H (FEARH)

Address(es): FLASH.FEARH 007F C120h

	b15	b14	b13	b12	b11	b10	b9	b8	b7	b6	b5	b4	b3	b2	b1	b0
								—	—	—	—					
Value after reset:	0	0	0	0	0	0	0	0	0	0	0	0	0	0	0	0

The FEARH register is used to set the end address of the target processing range in the flash memory when a software command is executed.
Set bit 31 to bit 25 and bit 20 to bit 16 of the flash memory address for programming/erasure in this register.
Data can be written to this register in ROM P/E mode or E2 DataFlash P/E mode.
This register is initialized by a reset or setting the FRESETR.FRESET bit to 1. Data cannot be written to this register while the FRESETR.FRESET bit is 1.
If this register is read while executing a software command set by the FEXCR register, an undefined value is read.
Refer to Figure 38.1 and Figure 38.2 for details on the addresses of the flash memory.

38.4.14 Flash Processing End Address Register L (FEARL)

Address(es): FLASH.FEARL 007F C118h

	b15	b14	b13	b12	b11	b10	b9	b8	b7	b6	b5	b4	b3	b2	b1	b0
Value after reset:	0	0	0	0	0	0	0	0	0	0	0	0	0	0	0	0

The FEARH register is used to set the end address of the target range for processing when a software command is executed.
Set bit 15 to bit 0 of the flash memory address for programming/erasure in this register.
When the target is the ROM, set bit 2 to bit 0 to 000b.
Data can be written to this register in ROM P/E mode or E2 DataFlash P/E mode.
This register is initialized by a reset or setting the FRESETR.FRESET bit to 1. Data cannot be written to this register while the FRESETR.FRESET bit is 1.
If this register is read while executing a software command set by the FEXCR register, an undefined value is read.
Refer to Figure 38.1 and Figure 38.2 for details on the addresses of the flash memory.

38.4.15 Flash Write Buffer Register n (FWBn) (n = 0 to 3)

Address(es): FLASH.FWB0 007F C130h, FLASH.FWB1 007F C138h, FLASH.FWB2 007F C140h, FLASH.FWB3 007F C144h

	b15	b14	b13	b12	b11	b10	b9	b8	b7	b6	b5	b4	b3	b2	b1	b0
Value after reset:	0	0	0	0	0	0	0	0	0	0	0	0	0	0	0	0

This register is used to set the data for programming the ROM, E2 DataFlash, or extra area. The data can be written in ROM P/E mode or E2 DataFlash P/E mode.

This register is initialized by a reset or setting the FRESETR.FRESET bit to 1. Data cannot be written to this register while the FRESETR.FRESET bit is 1.

The read value of this register is undefined while executing a software command set by the FCR register or the FEXCR register.

When programming the extra area, set the 4-byte data for programming in registers FWB0 and FWB1.

When programming the E2 DataFlash, set the data for programming in the lower 8 bits in the FWB0 register.

When programming the ROM, set the 8-byte data for programming in registers FWB0 to FWB3. Figure 38.3 shows the relationship between the addresses indicated by registers FSARH and FSARL and the data set in the FWBn register.

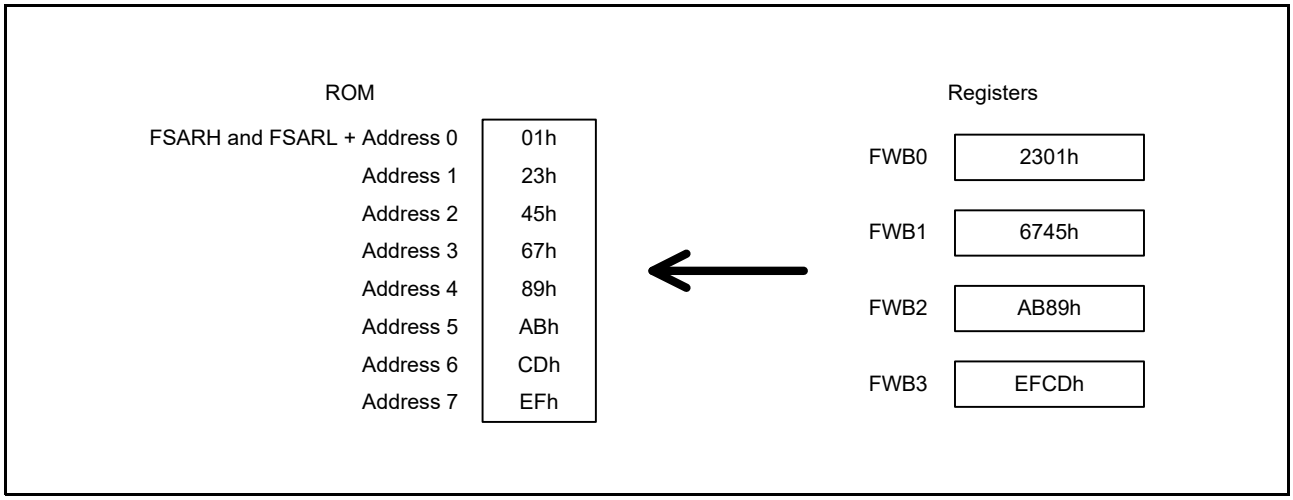

Figure 38.3 FWBn Register Setting Values and Data Allocation in the ROM

38.4.16 Flash Status Register 0 (FSTATR0)

Address(es): FLASH.FSTATR0 007F C1F0h

	b7	b6	b5	b4	b3	b2	b1	b0
	—	—	EILGLERR	ILGLERR	BCERR	—	PRGERR	ERERR
Value after reset:	x	0	0	0	0	0	0	0

Bit	Symbol	Bit Name	Description	R/W
b0	ERERR	Erase Error Flag	0: Erasure terminates normally. 1: An error occurs during erasure.	R
b1	PRGERR	Program Error Flag	0: Programming terminates normally. 1: An error occurs during programming.	R
b2	—	Reserved	The read value is undefined.	R
b3	BCERR	Blank Check Error Flag	0: Blank checking terminates normally. 1: An error occurs during blank checking.	R
b4	ILGLERR	Illegal Command Error Flag	0: No illegal software command or illegal access is detected. 1: An illegal command or illegal access is detected.	R
b5	EILGLERR	Extra Area Illegal Command Error Flag	0: No illegal command or illegal access to the extra area is detected. 1: An illegal command or illegal access to the extra area is detected.	R
b7, b6	—	Reserved	The read value is undefined.	R

This register is a status register used to confirm the result of executing a software command. Each error flag is set to 0 when the next software command is executed.

ERERR Flag (Erase Error Flag)

This flag indicates the result of the erase processing for the ROM/E2 DataFlash.

[Setting condition]

- An error occurs during erasure.

[Clearing condition]

- The next software command is executed.
  The value read from this flag is undefined when the FCR.STOP bit is set to 1 (processing is forcibly stopped) during erasure.

PRGERR Flag (Program Error Flag)

This flag indicates the result of the program processing for the ROM/E2 DataFlash.

[Setting condition]

- An error occurs during programming.

[Clearing condition]

- The next software command is executed.

BCERR Flag (Blank Check Error Flag)

This flag indicates the result of the blank check processing for the ROM/E2 DataFlash.

[Setting condition]

- An error occurs during blank checking.

[Clearing condition]

- The next software command is executed.
  The value read from this flag is undefined when the FCR.STOP bit is set to 1 (processing is forcibly stopped) during blank checking.

ILGLERR Flag (Illegal Command Error Flag)

This flag indicates the result of executing a software command.

[Setting conditions]

- Programming/erasure is executed to an area other than the access window range.
- A blank check or block erase command is executed when the set value of registers FSARH and FSARL is larger than the set value of registers FEARH and FEARL.
- Program and block erase commands are executed when the FASR.EXS bit is 1.
- An all-block erase command is executed while the access window is set.
- An all-block erase command is executed without setting registers FSARH and FSARL and registers FEARH and FEARL properly.
- The E2 DataFlash address is set in registers FSARH and FSARL and a software command is executed when the ROM is in P/E mode.
- The ROM address is set in registers FSARH and FSARL and a software command is executed when the E2 DataFlash is in P/E mode.
- The ROM and E2 DataFlash are set to P/E mode and a software command is executed.

[Clearing condition]

- The next software command is executed.

EILGLERR Flag (Extra Area Illegal Command Error Flag)

This flag indicates the result of executing a software command for the extra area.

[Setting condition]

- A software command for the extra area is executed when the FASR.EXS bit is 0.

[Clearing condition]

- The next software command is executed.

38.4.17 Flash Status Register 1 (FSTATR1)

Address(es): FLASH.FSTATR1 007F C12Ch

	b7	b6	b5	b4	b3	b2	b1	b0
	EXRDY	FRDY	—	—	—	—	—	—
Value after reset:	0	0	0	0	0	1	0	0

Bit	Symbol	Bit Name	Description	R/W
b1, b0	—	Reserved	These bits are read as 0.	R
b2	—	Reserved	This bit is read as 1.	R
b5 to b3	—	Reserved	These bits are read as 0.	R
b6	FRDY	Flash Ready Flag	0: Other than below 1: 00h can be written to the FCR register (processing to complete the software command).	R
b7	EXRDY	Extra Area Ready Flag	0: Other than below 1: 00h can be written to the FEXCR register (processing to complete the software command).	R

This register is a status register used to confirm the result of executing a software command. Each flag is set to 0 when the next software command is executed.

FRDY Flag (Flash Ready Flag)

This flag is used to confirm whether a software command is executed.
This flag becomes 1 when processing of the executed software command or the forced stop processing is completed, and this flag becomes 0 when setting the FCR.OPST bit to 0.
Also, an interrupt (FRDYI) is generated when this flag becomes 1.

EXRDY Flag (Extra Area Ready Flag)

This flag is used to confirm whether a software command for the extra area is executed.
This flag is set to 1 when processing of the executed software command is completed, and 0 when the FEXCR.OPST bit is set to 0.
Also, an interrupt (FRDYI) is generated when this flag becomes 1.

38.4.18 Flash Error Address Monitor Register H (FEAMH)

Address(es): FLASH.FEAMH 007F C1E8h

	b15	b14	b13	b12	b11	b10	b9	b8	b7	b6	b5	b4	b3	b2	b1	b0
								—	—	—	—					
Value after reset:	0	0	0	0	0	0	0	0	0	0	0	0	0	0	0	0

This register is used to check the address where the error has occurred if an error occurs during processing of a software command. This register stores bit 31 to bit 25 and bit 20 to bit 16 of the address where the error has occurred for the program command or blank check command, or it stores bit 31 to bit 25 and bit 20 to bit 16 of the beginning address of the area where the error has occurred for the block erase command or all-block erase command.
Since this register value becomes undefined if setting the FRESETR.FRESET bit to 1, read the value before error processing.
If the software command terminates normally, this register stores bit 31 to bit 25 and bit 20 to bit 16 of the end address at execution of the command.
Refer to Figure 38.1 and Figure 38.2 for details on the addresses of the flash memory.

38.4.19 Flash Error Address Monitor Register L (FEAML)

Address(es): FLASH.FEAML 007F C1E0h

	b15	b14	b13	b12	b11	b10	b9	b8	b7	b6	b5	b4	b3	b2	b1	b0
Value after reset:	0	0	0	0	0	0	0	0	0	0	0	0	0	0	0	0

This register is used to check the address where the error has occurred if an error occurs during processing of a software command. This register stores bit 15 to bit 0 of the address where the error has occurred for the program command or blank check command, or it stores bit 15 to bit 0 of the beginning address of the area where the error has occurred for the block erase command or all-block erase command.
Since this register value becomes undefined if setting the FRESETR.FRESET bit to 1, read the value before error processing.
When the software command is normally completed, this register stores bit 15 to bit 0 of the last address at execution of the command.
When executing a software command for the ROM, lower 3 bits become 000b.
Refer to Figure 38.1 and Figure 38.2 for details on the addresses of the flash memory.

38.4.20 Flash Start-Up Setting Monitor Register (FSCMR)

Address(es): FLASH.FSCMR 007F C1C0h

	b15	b14	b13	b12	b11	b10	b9	b8	b7	b6	b5	b4	b3	b2	b1	b0
	—	—	—	—	—	—	—	SASMF	—	—	—	—	—	—	—	—
Value after reset:	0	1	1	1	0	1	1	Value set by user*1	0	0	0	0	0	0	0	0

Bit	Symbol	Bit Name	Description	R/W
b7 to b0	—	Reserved	These bits are read as 0.	R
b8	SASMF	Start-Up Area Setting Monitor Flag	0: Setting to start up using the alternative area 1: Setting to start up using the default area	R
b10, b9	—	Reserved	These bits are read as 1. Writing to these bits has no effect.	R
b11	—	Reserved	This bit is read as 0. Writing to this bit has no effect.	R
b14 to b12	—	Reserved	These bits are read as 1. Writing to these bits has no effect.	R
b15	—	Reserved	This bit is read as 0. Writing to this bit has no effect.	R

Note 1. The value of the blank product is 1. It is set to the same value set in bit 8 in the FWB0 register after the start-up area information program command is executed.

SASMF Flag (Start-Up Area Setting Monitor Flag)

This flag is used to confirm the settings of the start-up area.

When this flag is 0, the user program is set to start up using the alternative area.

When this flag is 1, the user program is set to start up using the default area.

38.4.21 Flash Access Window Start Address Monitor Register (FAWSMR)

Address(es): FLASH.FAWSMR 007F C1C8h

	b15	b14	b13	b12	b11	b10	b9	b8	b7	b6	b5	b4	b3	b2	b1	b0
	—	—	—	—												
Value after reset:	0	0	0	0	The value set by the user*1											

Note 1. The value of the blank product is 1. It is set to the same value set in bit 11 to bit 0 the FWB0 register after the access window information program command is executed.

This register is used to confirm the set value of the access window start address used for area protection.

38.4.22 Flash Access Window End Address Monitor Register (FAWEMR)

Address(es): FLASH.FAWEMR 007F C1D0h

	b15	b14	b13	b12	b11	b10	b9	b8	b7	b6	b5	b4	b3	b2	b1	b0
	—	—	—	—												
Value after reset:	0	0	0	0	The value set by the user*1											

Note 1. The value of the blank product is 1. It is set to the same value set in bit 11 to bit 0 in the FWB1 register after the access window information program command is executed.

This register is used to confirm the set value of the access window end address used for area protection.

38.4.23 Unique ID Register n (UIDRn) (n = 0 to 3)

Address(es): FLASHCONST.UIDR0 007F C350h, FLASHCONST.UIDR1 007F C354h, FLASHCONST.UIDR2 007F C358h, FLASHCONST.UIDR3 007F C35Ch

	b31	b30	b29	b28	b27	b26	b25	b24	b23	b22	b21	b20	b19	b18	b17	b16
Value after reset:	Unique value for each chip															

	b15	b14	b13	b12	b11	b10	b9	b8	b7	b6	b5	b4	b3	b2	b1	b0
Value after reset:	Unique value for each chip															

The UIDRn register stores a 16-byte ID code (unique ID) for identifying the individual MCU.
The unique ID is stored in the extra area of the flash memory and cannot be rewritten by the user.

38.5 Start-Up Program Protection

When rewriting the start-up program*1 by self-programming, if the rewrite operation is interrupted due to temporary blackout, the start-up program may not be successfully programmed and the user program may not start properly. This problem can be avoided by rewriting the start-up program without erasing the existing start-up program using the start-up program protection. This function is available in products with a 32-Kbyte or larger ROM.
Figure 38.4 shows the overview of the start-up program protection. In this figure, the default area indicates block 0 to block 7, and the alternate area indicates block 8 to block 15.

Note 1. Program to perform operation to start the user program. It includes the fixed vector table.

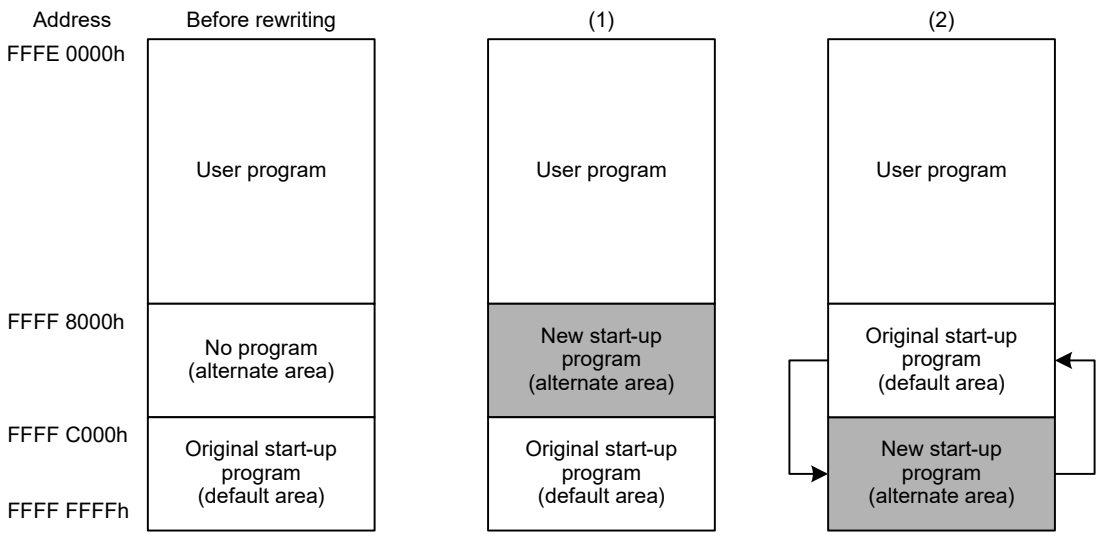

(1) Program a new start-up program in the alternate area. If the alternate area fails to be rewritten, the new start-up program can be rewritten again after starting up using the default area, because the original start-up program is in the default area.

(2) After the alternate area is successfully rewritten, the default area and the alternate area are switched using the start-up area information program command. After that, the program in the alternate area starts after a reset.

Figure 38.4 Overview of the Start-Up Program Protection

38.6 Area Protection

Area protection enables rewriting only the selected blocks (access window) in the user area and disables rewriting the other blocks during self-programming. The access window cannot be set in the data area.

Specify the start address and end address to set the access window. While the access window can be set in boot mode or by self-programming, area protection is enabled only during self-programming in single-chip mode.

Figure 38.5 shows the overview of the area protection.

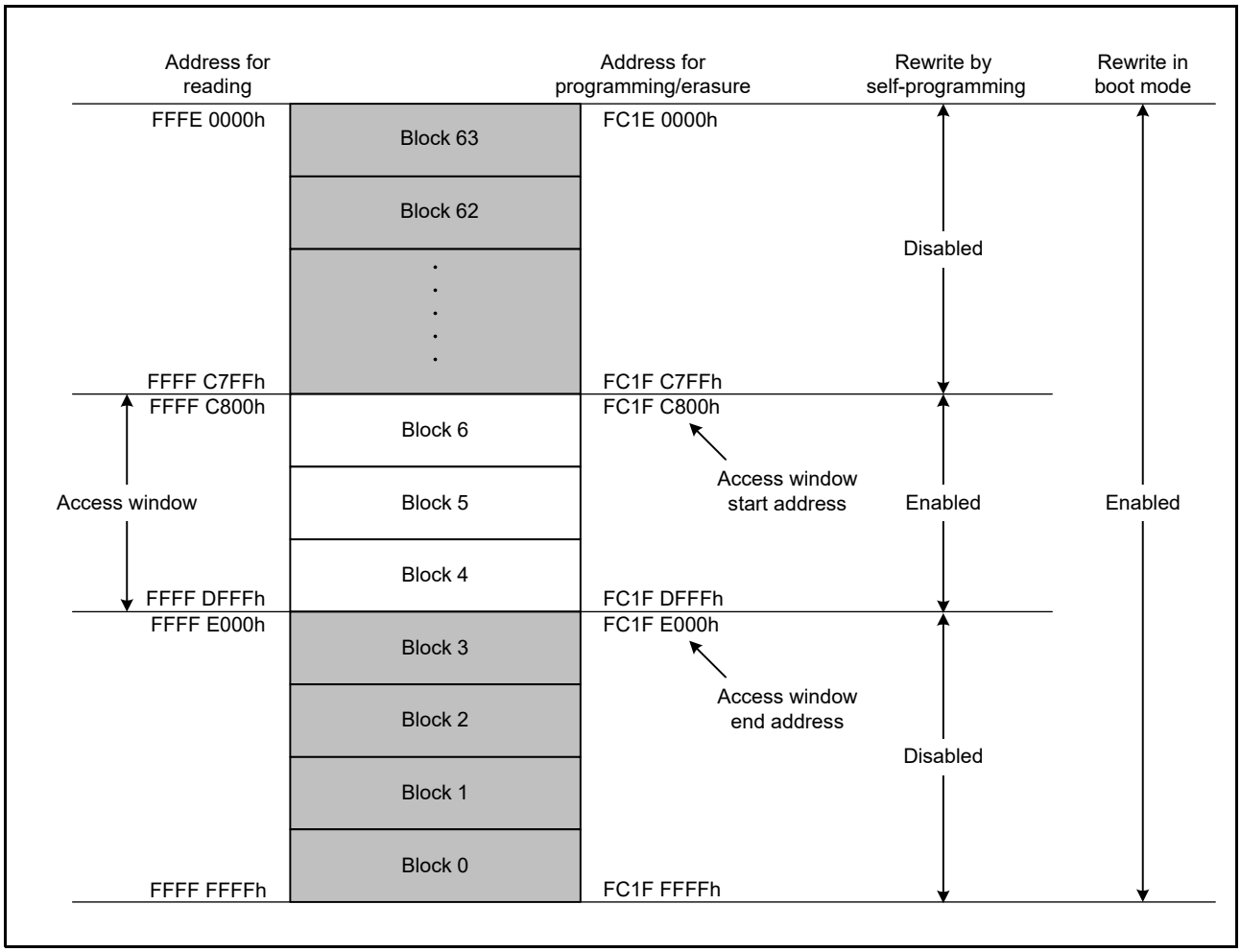

Figure 38.5 Area Protection Overview (When Blocks 4 to 6 are Set as the Access Window in Products with 128-Kbyte ROM)

38.7 Programming and Erasure

The ROM and E2 DataFlash can be programmed and erased by changing the mode of the dedicated sequencer for programming and erasure, and by issuing commands for programming and erasure.
The mode transitions and commands required to program or erase the ROM and E2 DataFlash are described below. The descriptions apply in common to boot mode and single-chip mode.

38.7.1 Sequencer Modes

The sequencer has four modes. Transitions between modes are caused by writing to the DFLCTL and FENTRYR registers and setting the FPMCR register. Figure 38.6 is a diagram of mode transitions of the flash memory.

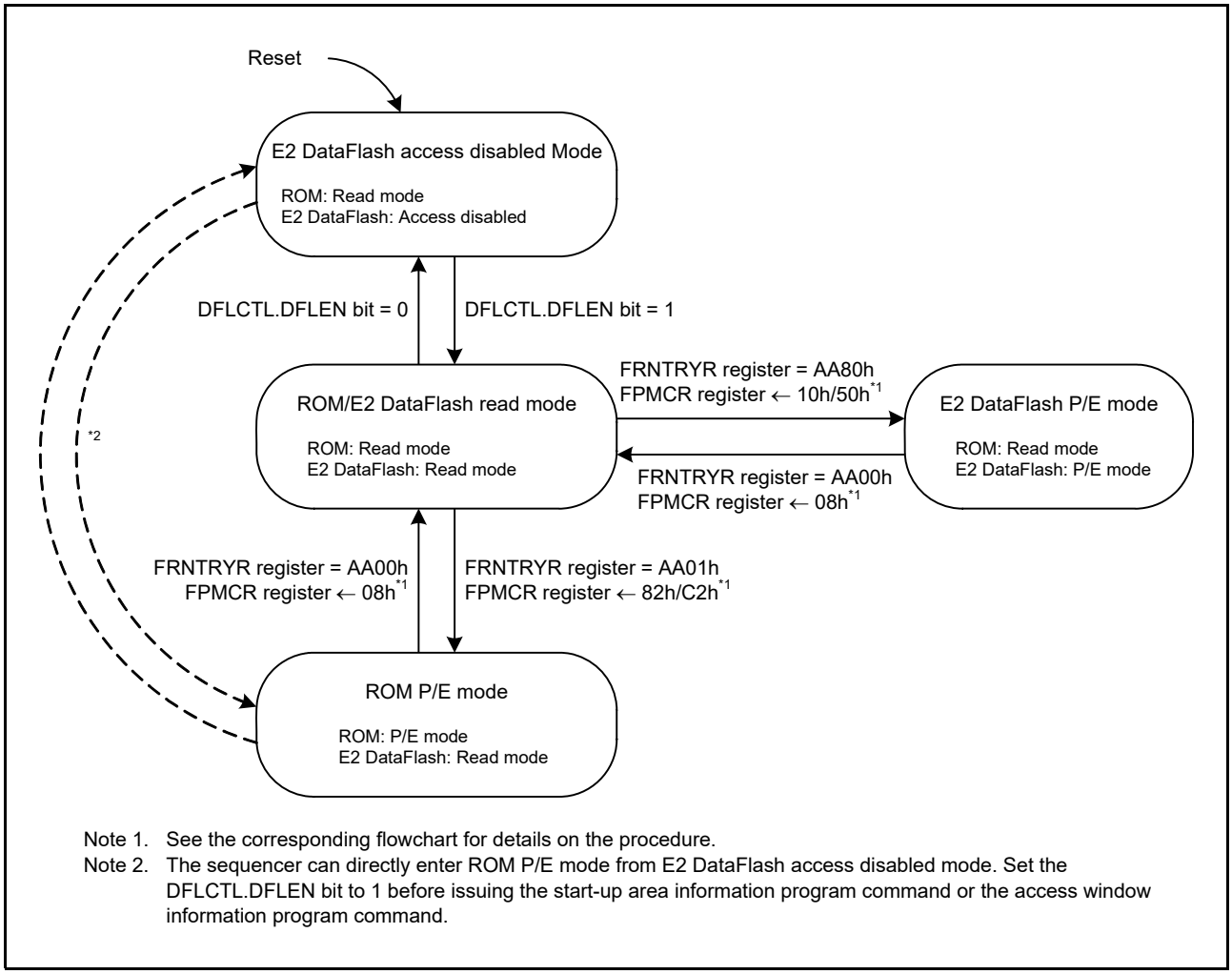

Note 1. See the corresponding flowchart for details on the procedure.
Note 2. The sequencer can directly enter ROM P/E mode from E2 DataFlash access disabled mode. Set the DFLCTL.DFLEN bit to 1 before issuing the start-up area information program command or the access window information program command.

Figure 38.6 Mode Transitions of the Flash Memory

38.7.1.1 E2 DataFlash Access Disabled Mode

In E2 DataFlash access disabled mode, access to the E2 DataFlash is disabled. After a reset, the sequencer enters this mode.
When setting the DFLCTL.DFLEN bit to 1, the E2 DataFlash is placed in read mode.

38.7.1.2 Read Mode

Read mode is for high-speed reading of the ROM/E2 DataFlash. Reading from a ROM address for reading can be accomplished in one ICLK clock.

(1) ROM/E2 DataFlash Read Mode
In this mode, both the ROM and E2 DataFlash are in read mode. The sequencer enters this mode from P/E mode when setting the FPMCR register to 08h, setting the FENTRYR.FENTRYD bit to 0, and setting the FENTRYR.FENTRY0 bit to 0.

38.7.1.3 P/E Modes

The P/E mode is for programming and erasure of the ROM/E2 DataFlash.

(1) ROM P/E Mode
In this mode, the ROM is in P/E mode, and the E2 DataFlash is in read mode. The sequencer enters this mode when setting the FENTRYR.FENTRYD to 0, setting the FENTRYR.FENTRY0 bit to 1, and setting the FPMCR register 82h or C2h.
(2) E2 DataFlash P/E Mode
In this mode, the ROM is in read mode, and the E2 DataFlash is in P/E mode. The sequencer enters this mode when the setting the FENTRYR.FENTRYD to 1, setting the FENTRYR.FENTRY0 bit to 0, and setting the FPMCR register 10h or 50h.

38.7.2 Mode Transitions

38.7.2.1 Transition from E2 DataFlash Access Disable Mode to Read Mode

Reading of the E2 DataFlash requires switching from E2 DataFlash access disabled mode to ROM/E2 DataFlash read mode.
Set the DFLCTL.DFLEN bit to 1 to switch to ROM/E2 DataFlash read mode.
Figure 38.7 shows the procedure for transition from E2 DataFlash access disabled mode to ROM/E2 DataFlash read mode.

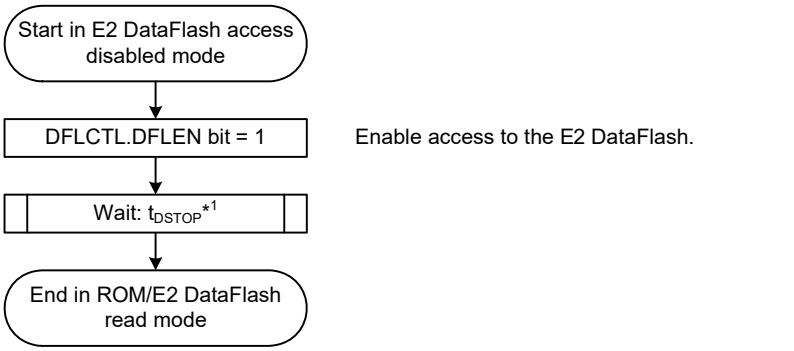

Note 1. t_{DSTOP}: STOP recovery time (Refer to the Electrical Characteristics chapter.)

Figure 38.7 Procedure for Transition from E2 DataFlash Access Disabled Mode to ROM/E2 DataFlash Read Mode

38.7.2.2 Transition from Read Mode to P/E Mode

Switching to ROM P/E mode is required before executing a software command for the ROM.
Figure 38.8 shows the procedure for transition from ROM/E2 DataFlash read mode to ROM P/E mode. Figure 38.9 shows the procedure for transition from ROM/E2 DataFlash read mode to E2 DataFlash P/E mode.

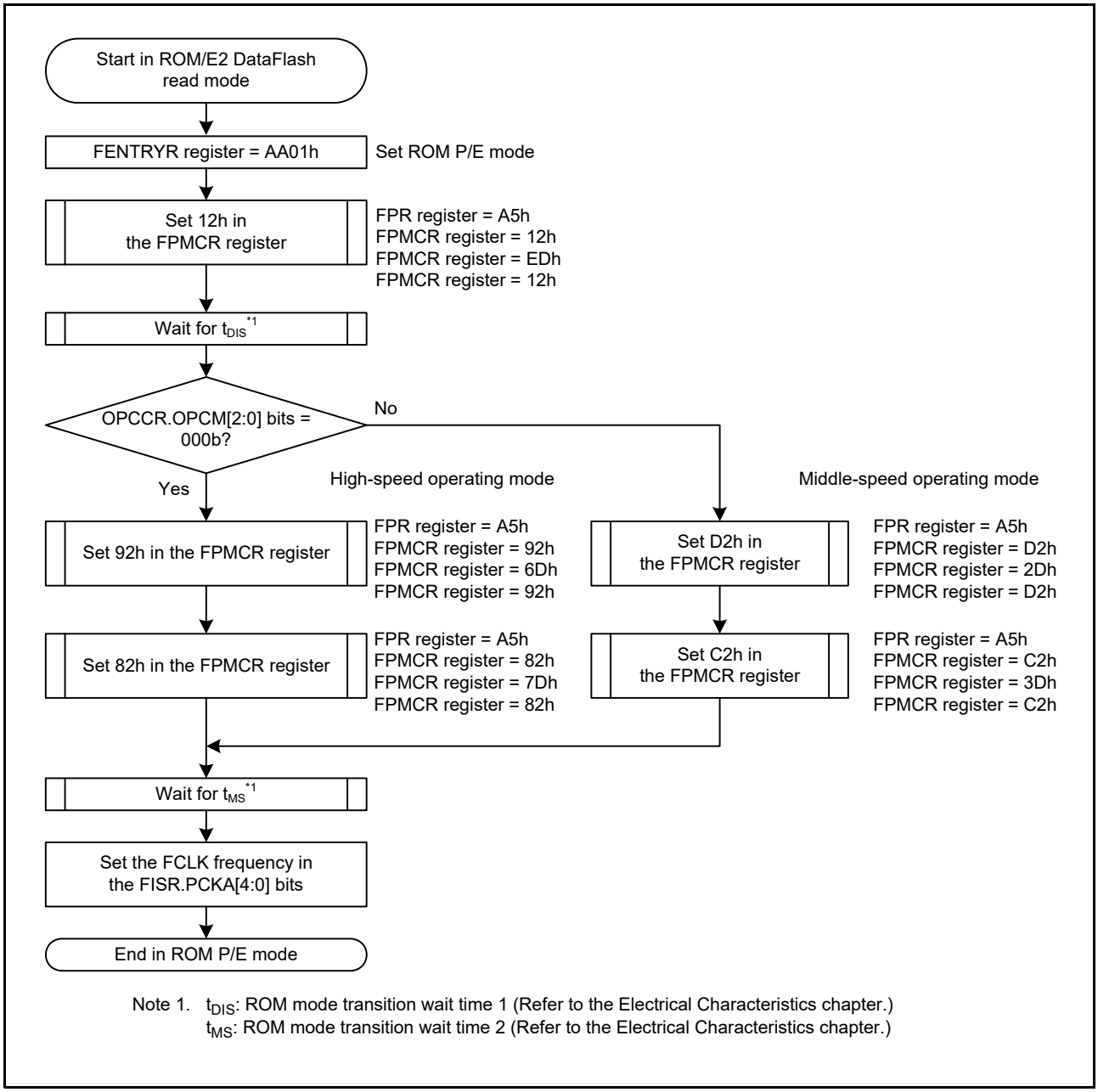

Figure 38.8 Procedure for Transition from ROM/E2 DataFlash Read Mode to ROM P/E Mode

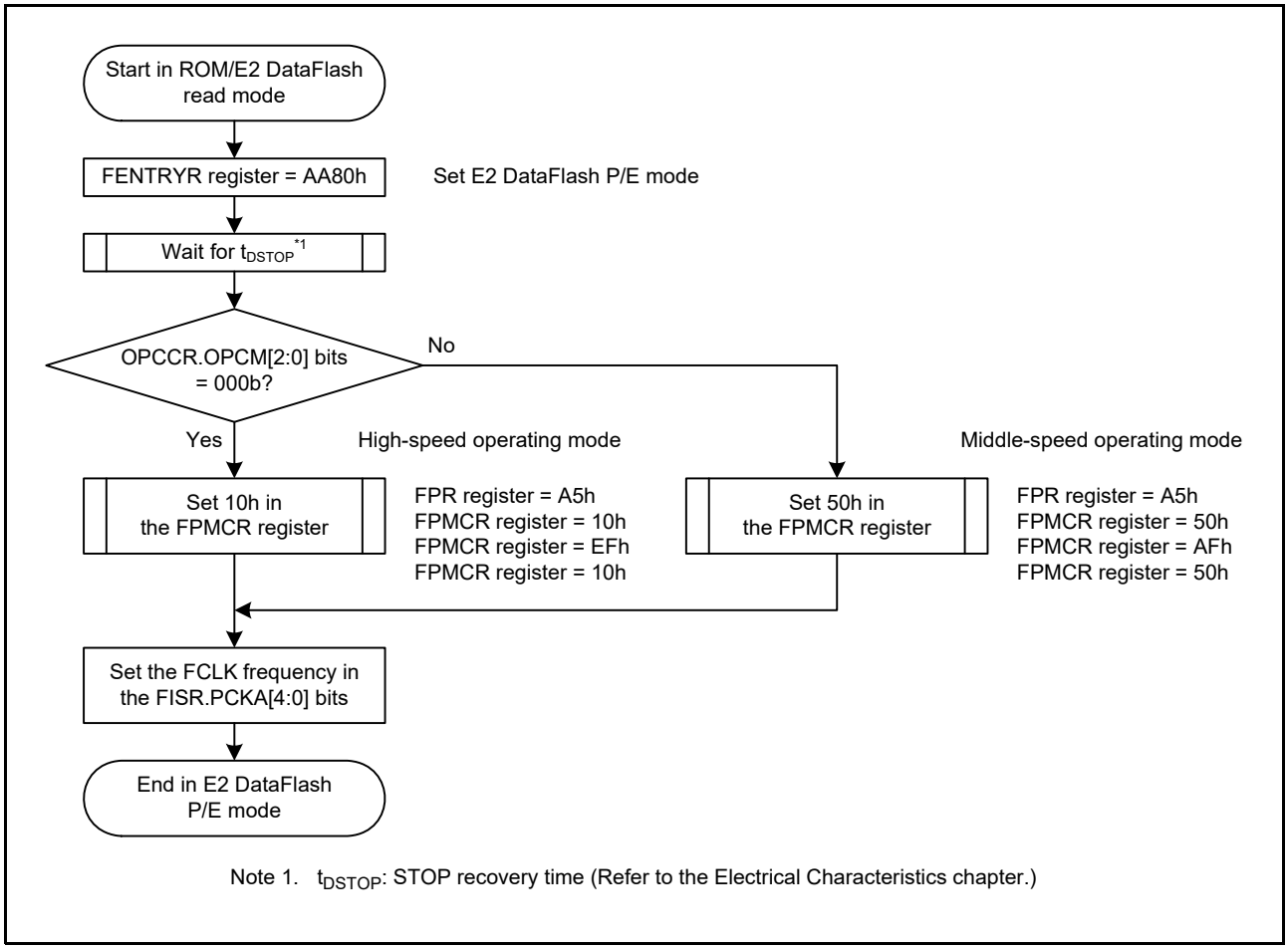

Figure 38.9 Procedure for Transition from ROM/E2 DataFlash Read Mode to E2 DataFlash P/E Mode

38.7.2.3 Transition from P/E Mode to Read Mode

High-speed reading of the ROM requires switching to ROM/E2 DataFlash read mode.
Figure 38.10 shows the procedure for transition from ROM P/E mode to ROM/E2 DataFlash read mode. Figure 38.11 shows the procedure for transition from E2 DataFlash P/E mode to ROM/E2 DataFlash read mode.

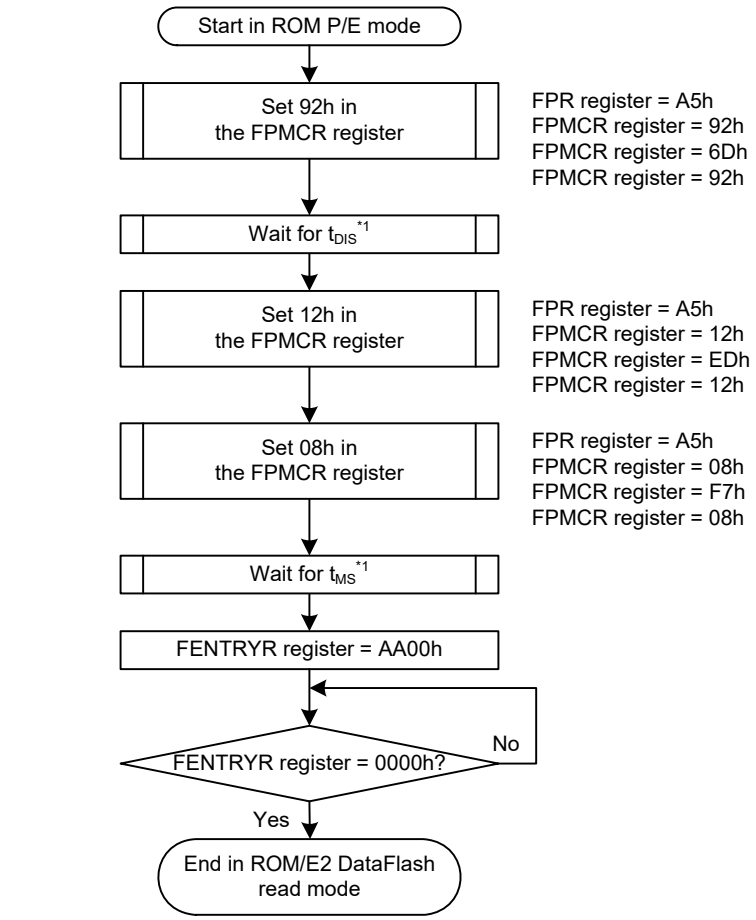

Note 1. t_{DIS}: ROM mode transition wait time 1 (Refer to the Electrical Characteristics chapter.)
t_{MS}: ROM mode transition wait time 2 (Refer to the Electrical Characteristics chapter.)

Figure 38.10 Procedure for Transition from ROM P/E Mode to ROM/E2 DataFlash Read Mode

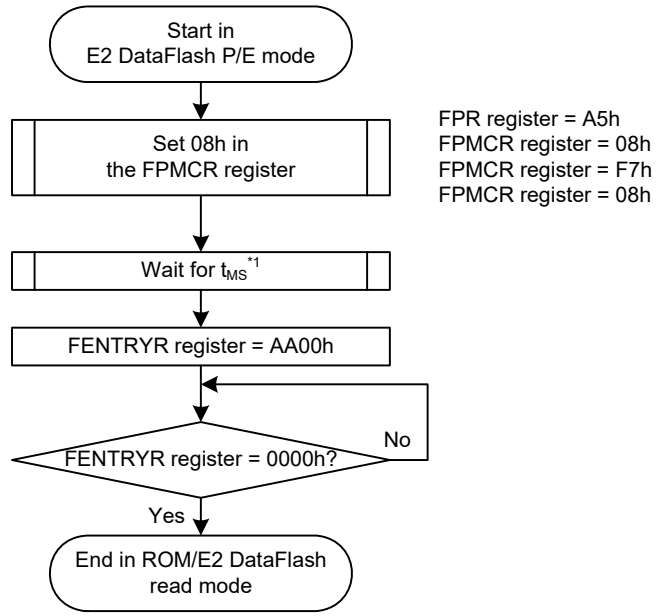

Note 1. t_{MS}: ROM mode transition wait time 2 (Refer to the Electrical Characteristics chapter.)

Figure 38.11 Procedure for Transition from E2 DataFlash P/E Mode to ROM/E2 DataFlash Read Mode

38.7.3 Software Commands

Software commands consist of commands for programming and erasure and commands for programming start-up program area information and access window information. Table 38.5 lists the software commands for use with the flash memory.

Table 38.5 Software Commands

Command	Function
Program	• ROM programming (8 bytes) • E2 DataFlash programming (1 byte)
Block erase	ROM/E2 DataFlash erasure
All-block erase	Erasure of all blocks in the ROM/E2 DataFlash
Blank check	Check whether the specified area is blank. Confirm that data is not programmed in the area. This command does not guarantee whether the area remains erased.
Start-up area information program	Rewrite the start-up area switching information used for start-up program protection.
Access window information program	Set the access window used for area protection.

38.7.4 Software Command Usage

This section describes how to use each software command, using flowcharts.

38.7.4.1 Program

Figure 38.12 and Figure 38.13 show the procedure to issue the program command.

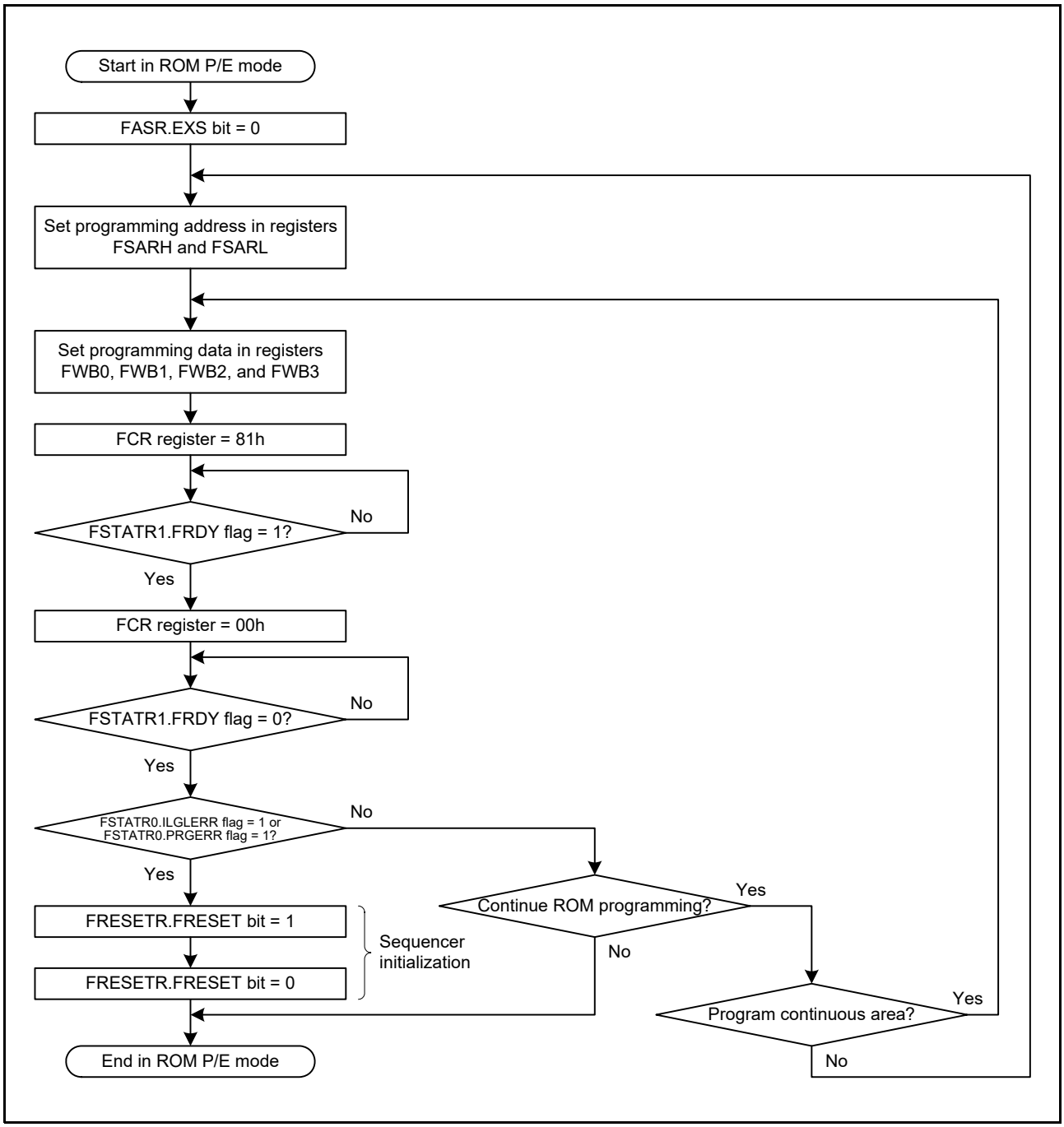

Figure 38.12 Procedure to Issue the Program Command for the ROM

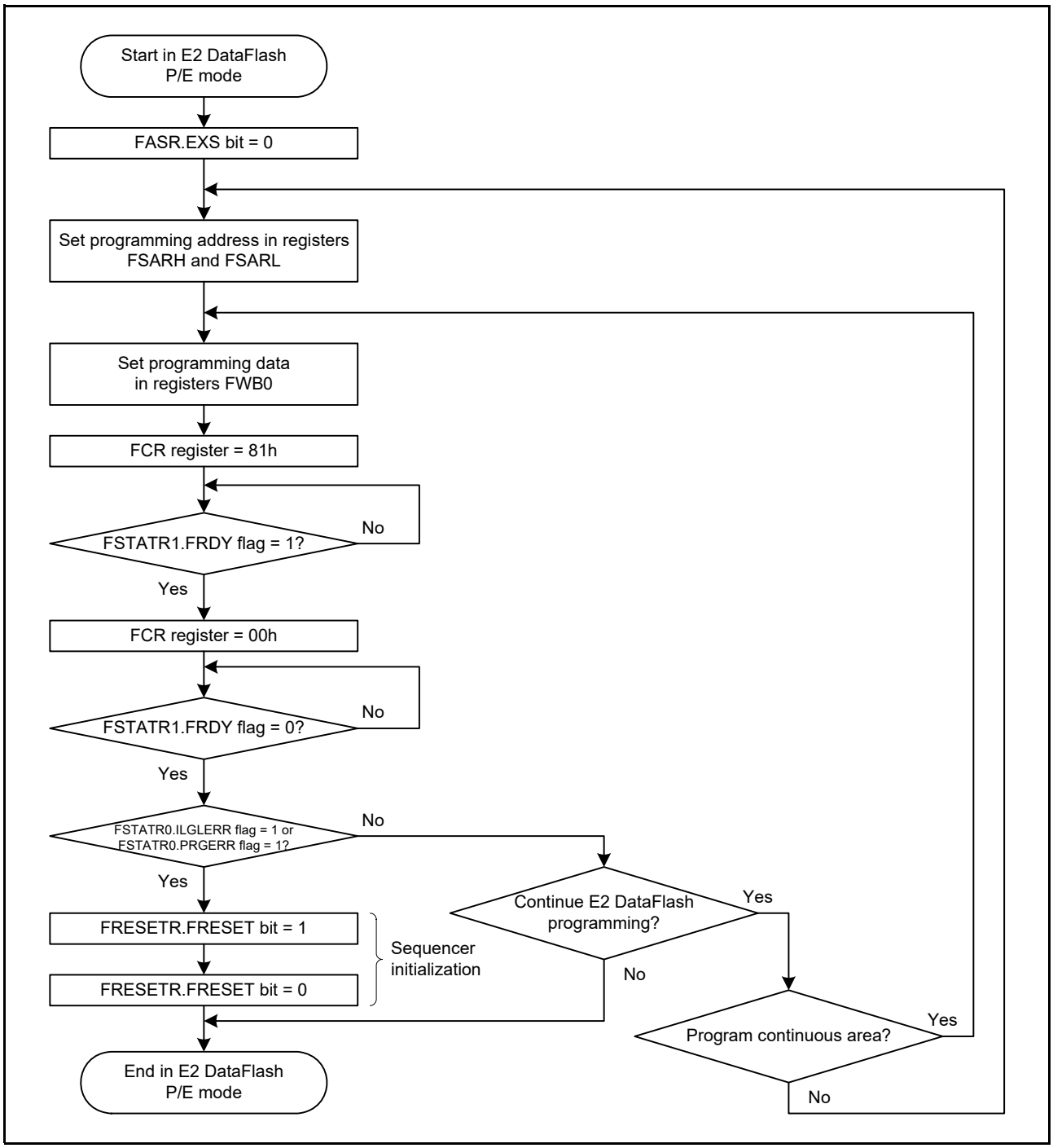

Figure 38.13 Procedure to Issue the Program Command for the E2 DataFlash

38.7.4.2 Block Erase

Figure 38.14 and Figure 38.15 show the procedure to issue the block erase command.

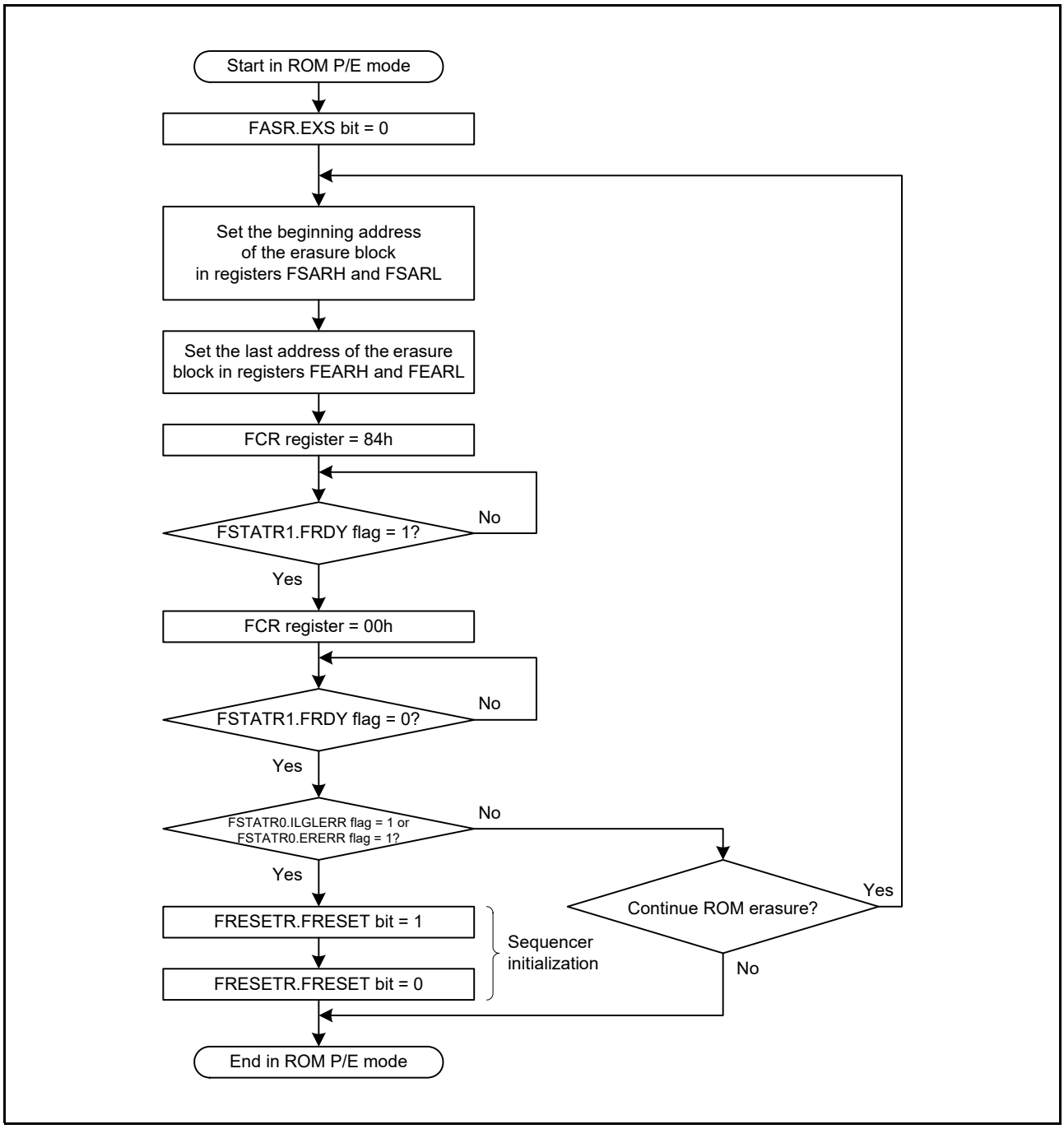

Figure 38.14 Procedure to Issue the Block Erase Command for the ROM

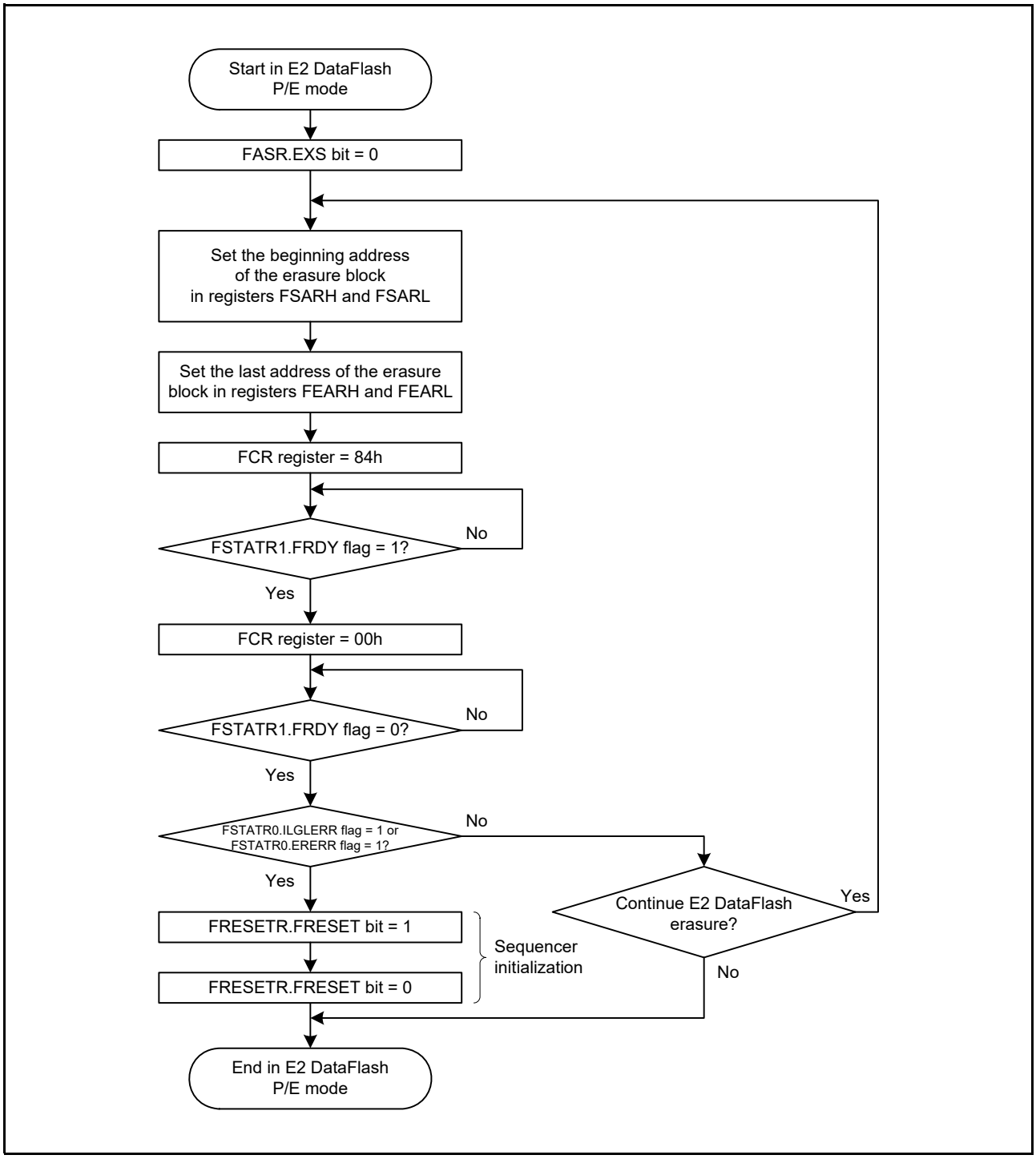

Figure 38.15 Procedure to Issue the Block Erase Command for the E2 DataFlash

38.7.4.3 All-Block Erase

Figure 38.16 and Figure 38.17 show the procedure to issue the all-block erase command.

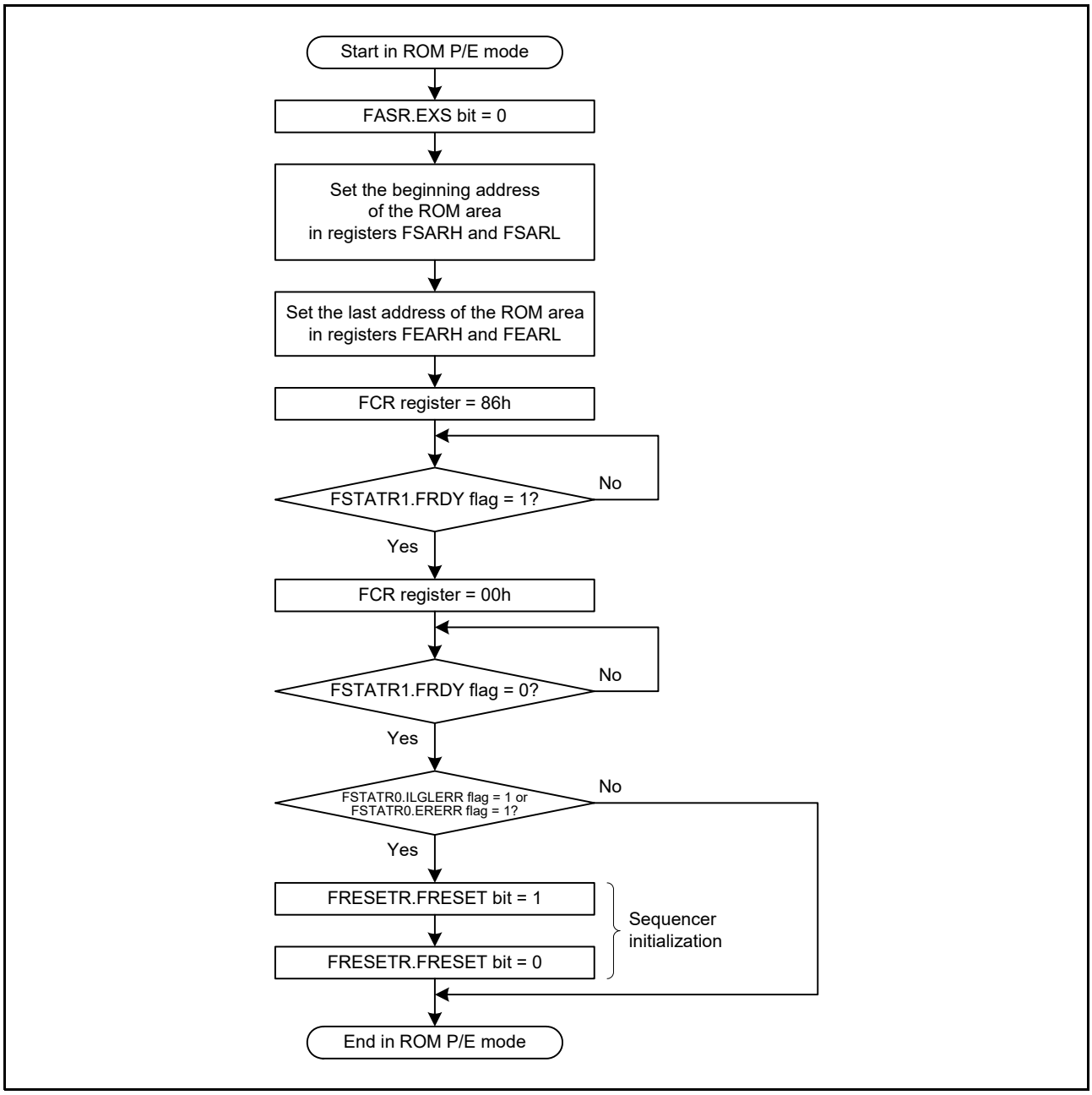

Figure 38.16 Procedure to Issue the All-Block Erase Command for the ROM

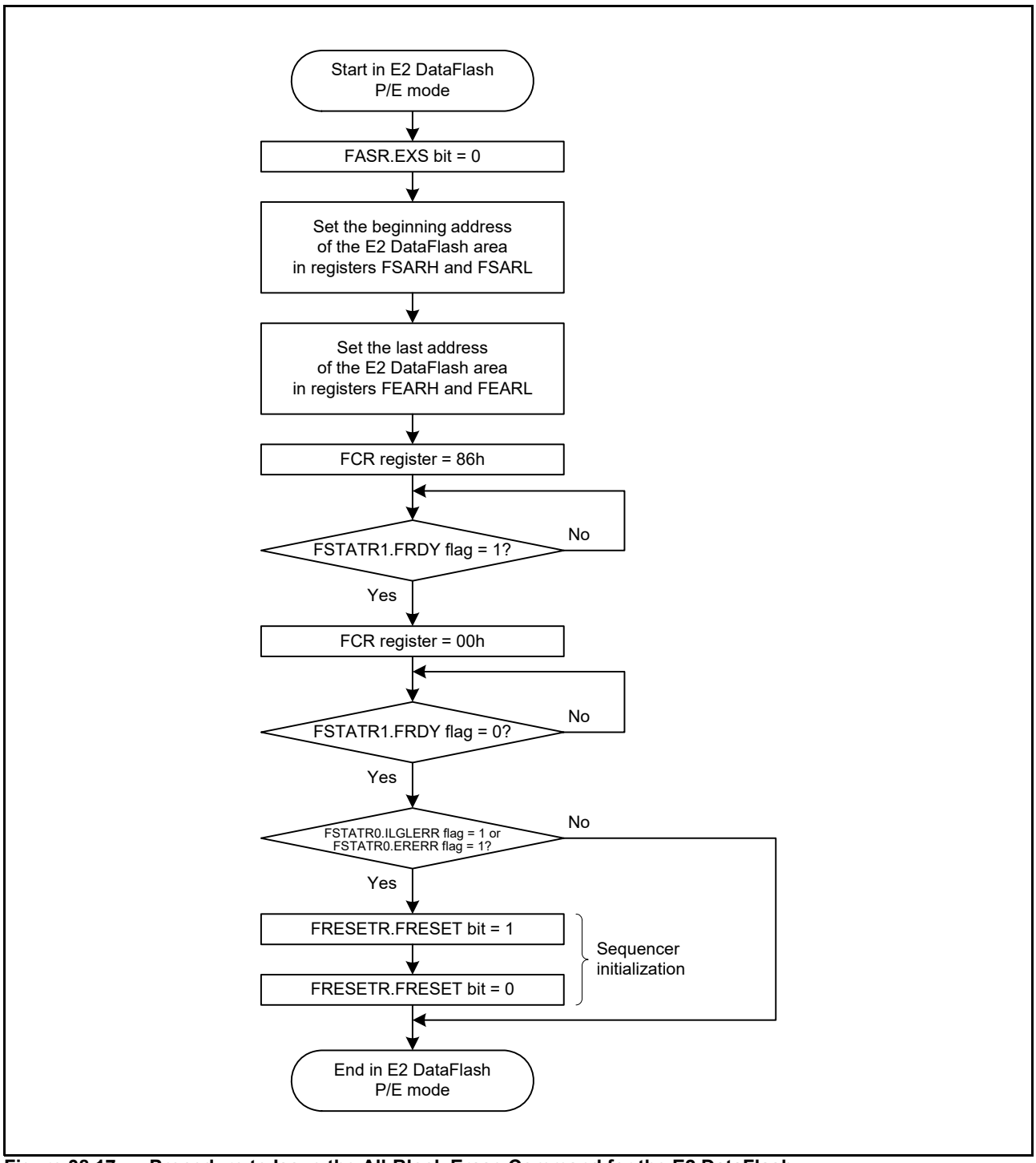

Figure 38.17 Procedure to Issue the All-Block Erase Command for the E2 DataFlash

38.7.4.4 Blank Check

Figure 38.18 and Figure 38.19 show the procedure to issue the blank check command.

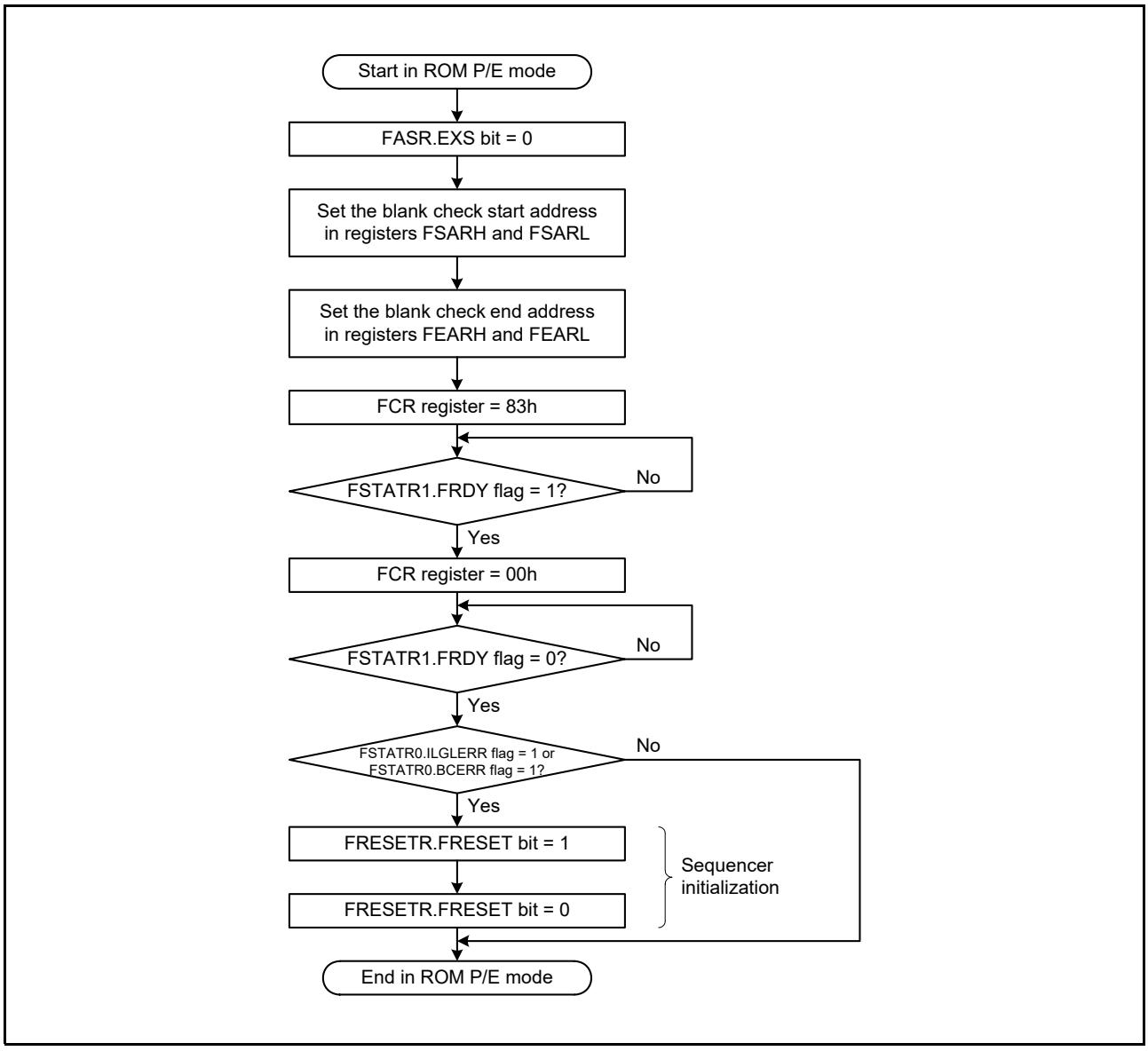

Figure 38.18 Procedure to Issue the Blank Check Command for the ROM

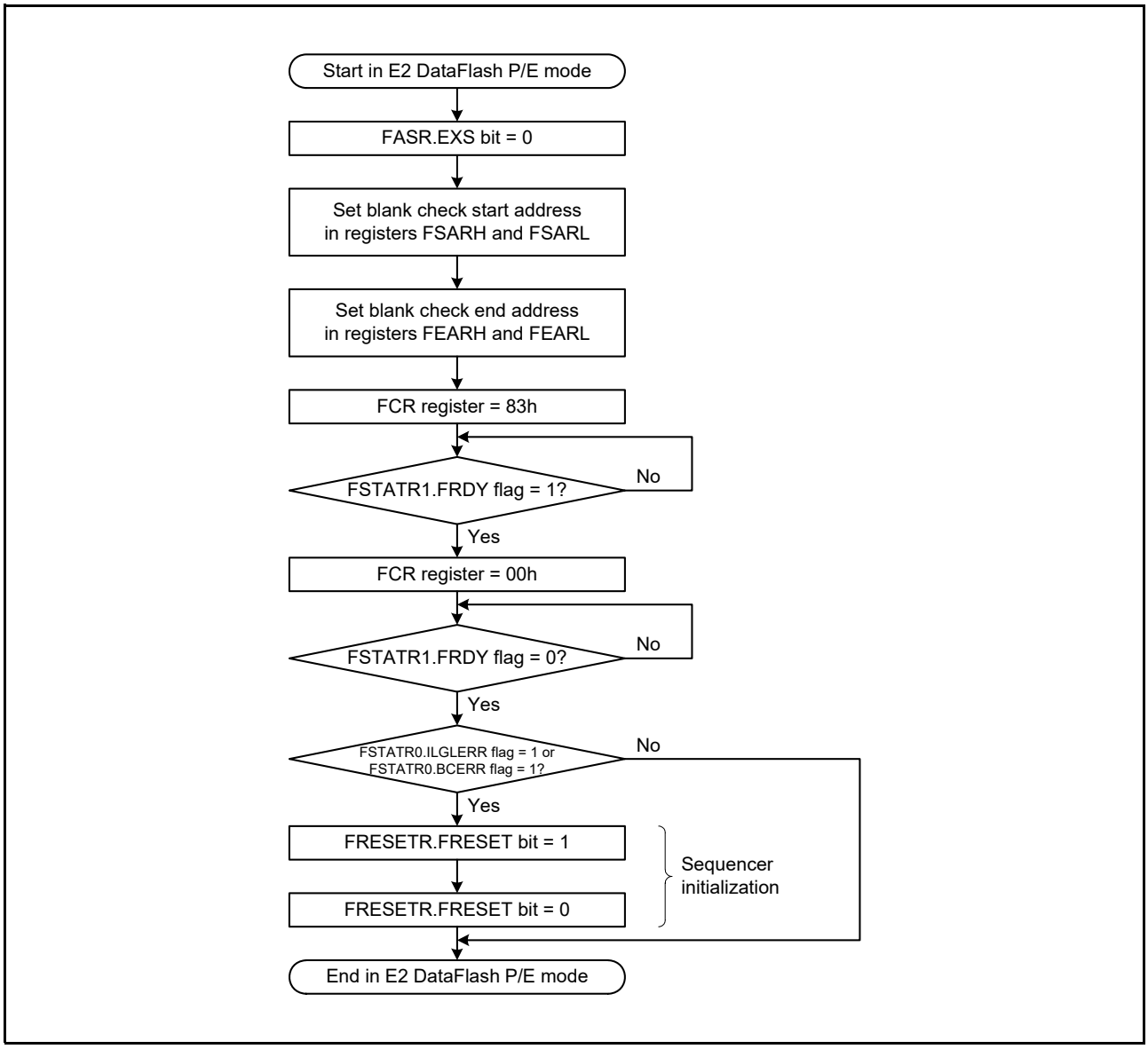

Figure 38.19 Procedure to Issue the Blank Check Command for the E2 DataFlash

38.7.4.5 Start-Up Area Information Program/Access Window Information Program

Figure 38.20 shows the procedure to issue the start-up area information program command and access window information program command.

When the sequencer has directly entered ROM/PE mode from E2 DataFlash access disabled mode, set the DFLCTL.DFLEN bit to 1 at the beginning of the procedure.

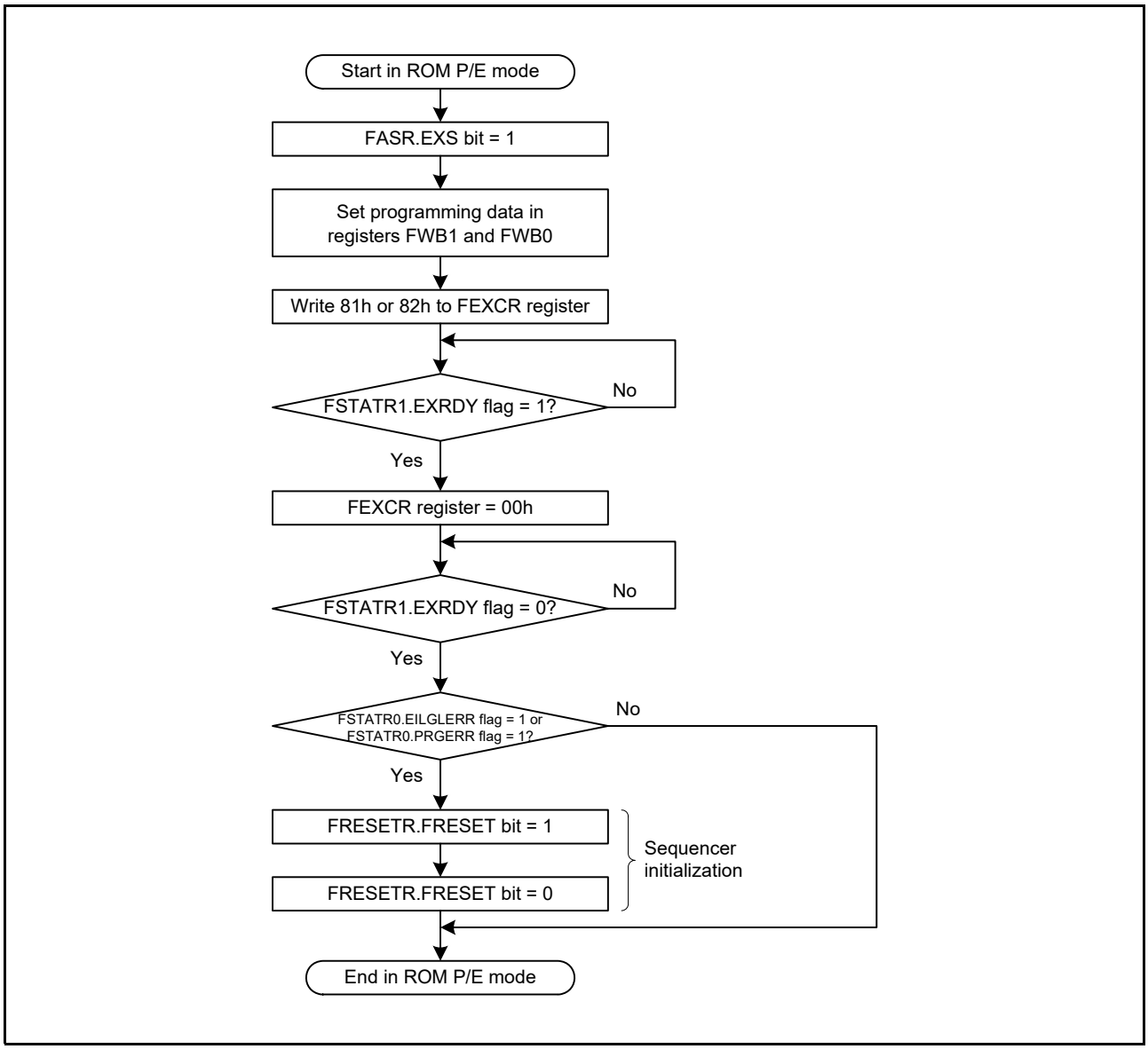

Figure 38.20 Procedure to Issue the Start-Up Area Information Program Command/Access Window Information Program Command

38.7.4.6 Forced Stop of Software Commands

Perform the procedure shown in Figure 38.21 to forcibly stop the blank check command or block erase command. When the command processing is forcibly stopped, registers FEAMH and FEAML store the address at the time of the forced stop. For blank check, the stopped processing can be continued by copying the FEAMH and FEAML register values to registers FSARH and FSARL.

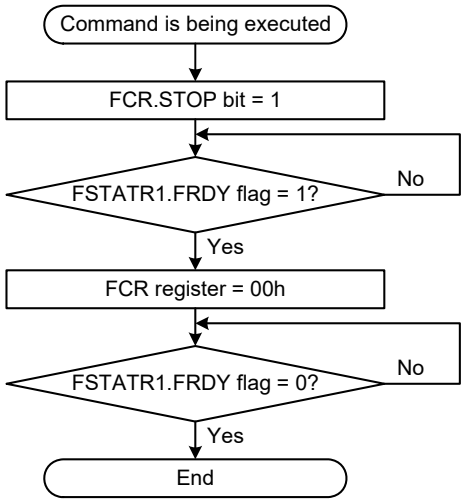

Figure 38.21 Procedure for Forced Stop of Software Commands

38.7.5 Interrupt

When software command processing or forced stop processing is completed, an interrupt (FRDYI) is generated.
When the FSTATR1.FRDY flag becomes 0 by setting the FCR.OPST bit to 0 and the FSTATR1.EXRDY flag becomes 0 by setting the FEXCR.OPST bit to 0, the next interrupt (FRDYI) can be accepted.
Clear the IRn.IR flag before setting the IERm.IENj bit of the ICU corresponding to this interrupt.

38.8 Boot Mode

The SCI or FINE interface is used in boot mode.

Table 38.6 lists the programmable and erasable areas and peripheral modules used in boot mode. Table 38.7 lists the I/O pins used in boot mode.

Table 38.6 Programmable and Erasable Areas and Peripheral Modules Used in Boot Mode

	Boot Mode	
Item	**SCI Interface**	**FINE Interface**
Programmable and erasable areas	User area Data area	User area Data area
Peripheral module	SCI1 (asynchronous serial communication)	FINE

Table 38.7 I/O Pins Used in Boot Mode

Pin Name	I/O	Mode	Description
MD	Input	Boot mode	Select operating mode (refer to section 3, Operating Modes).
MD/FINED	I/O	Boot mode (FINE interface)	Select operating mode/FINE data I/O
P30/RXD1	Input	Boot mode (SCI interface)	Receive data*1
P26/TXD1	Output		Transmit data*1

Note 1. When using the SCI, connect (pull up) this pin to VCC via a resistor.

38.8.1 Boot Mode (SCI Interface)

The flash memory can be programmed and erased using asynchronous serial communication in boot mode (SCI interface). The user area and data area can be rewritten.
When a reset is released while the MD pin is low, the MCU starts in boot mode (SCI interface).
Contact the manufacturer for details on the serial programmer.

38.8.1.1 Operating Conditions in Boot Mode (SCI Interface)

SCI1 is used to communicate with the serial programmer in boot mode (SCI interface).
Figure 38.22 shows an example of pin connections in boot mode (SCI interface). Table 38.8 lists pin handling in boot mode (SCI interface).
An example of pin connections shown in Figure 38.22 is a simplified circuit. Operations are not guaranteed in all systems.

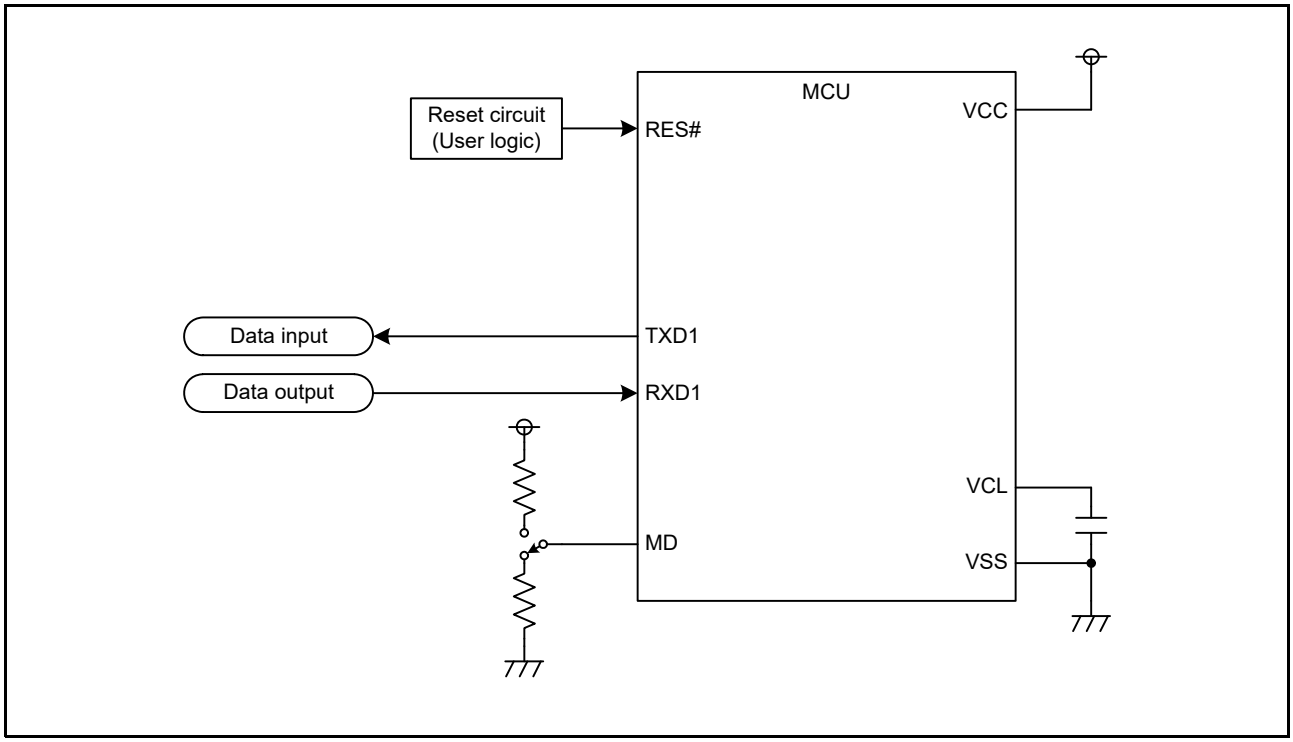

Figure 38.22 Example of Pin Connections in Boot Mode (SCI Interface)

Table 38.8 Pin Handling in Boot Mode (SCI Interface)

Pin Name	Name	I/O	Function
VCC, VSS	Power supply	—	Input 1.8 V or higher to the VCC pin. Input 0 V to the VSS pin.
VCL	Decoupling capacitor connect pin	—	Connect to the VSS pin via a decoupling capacitor for stabilizing the internal voltage.
MD	Operating mode control	Input	Input low.
RES#	Reset input	Input	Reset pin. Connect to the reset circuit.
P30/RXD1	Data input RXD	Input	Input pin for serial data
P26/TXD1	Data output TXD	Output	Output pin for serial data

As shown in Figure 38.23, set the format to 8-bit data, 1 stop bit, no parity, and LSB first to communicate with the serial programmer.

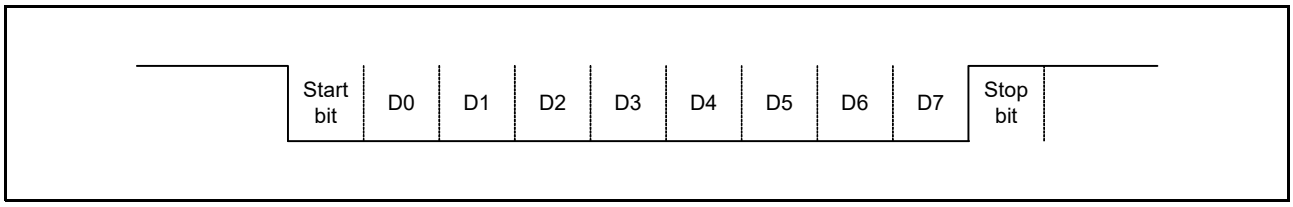

Figure 38.23 Communication Format

Initial communication with the programmer is performed at 9,600 or 19,200 bps. The communication bit rate can be changed after the MCU is connected with the programmer.
Table 38.9 lists the maximum communication bit rates for communication in boot mode (SCI interface).

Table 38.9 Conditions for Communication

Operating Voltage	Maximum Communication Bit Rate
Lower than 3.0 V	500 kbps
3.0 V or higher	2 Mbps

38.8.1.2 Starting Up in Boot Mode (SCI Interface)

To start the MCU in boot mode (SCI interface), a reset must be released by changing the RES# pin from low to high while the MD pin is low. After starting up in boot mode (SCI interface), wait at least 400 ms until communication with the MCU is enabled in boot mode (SCI interface).
As shown in Figure 38.24, keep the signal of each pin unchanged for 400 ms after the reset is released. Use resets according to the range described in section 39.4.2, Reset Timing.

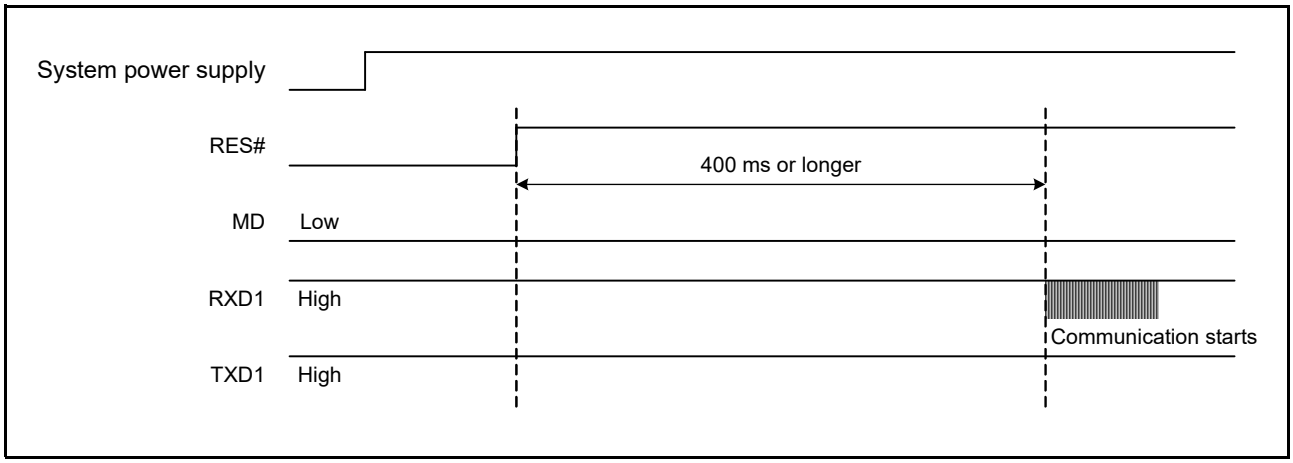

Figure 38.24 Wait Time until Communication Becomes Possible in Boot Mode (SCI Interface)

38.8.2 Boot Mode (FINE Interface)

The flash memory can be programmed and erased using the FINE in boot mode (FINE interface). The user area and data area can be rewritten.
Contact the manufacturer for details on the serial programmer.

38.8.2.1 Operating Conditions in Boot Mode (FINE Interface)

FINE is used to communicate with the serial programmer in boot mode (FINE interface).
Figure 38.25 shows an example of pin connections in boot mode (FINE interface). Table 38.10 lists pin handling in boot mode (FINE interface).
An example of pin connections shown in Figure 38.25 is a simplified circuit. Operations are not guaranteed in all systems.

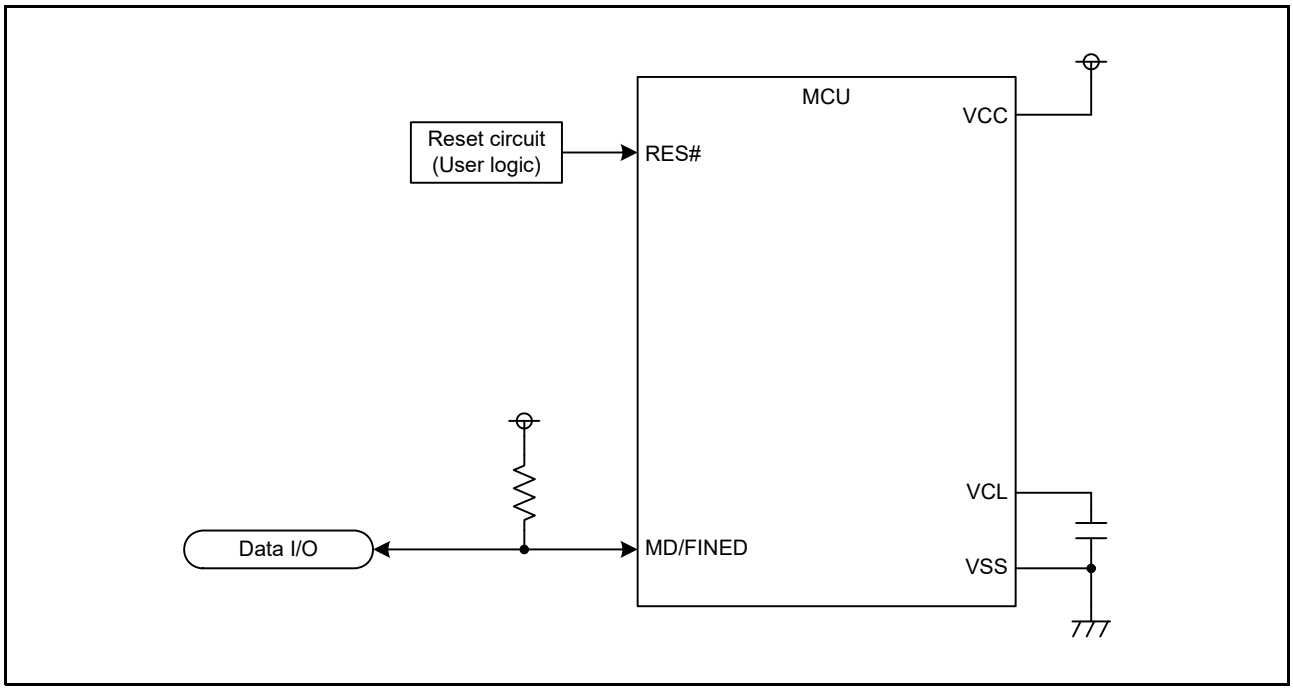

Figure 38.25 Example of Pin Connections in Boot Mode (FINE Interface)

Table 38.10 Pin Handling in Boot Mode (FINE Interface)

Pin Name	Name	I/O	Function
VCC, VSS	Power supply	—	Input 1.8 V or higher to the VCC pin. Input 0 V to the VSS pin.
VCL	Decoupling capacitor connect pin	—	Connect to the VSS pin via a decoupling capacitor for stabilizing the internal voltage.
MD/FINED	Operating mode control/data I/O	I/O	Connect to the VCC pin via a resistor (pull up).
RES#	Reset input	Input	Reset pin. Connect to the reset circuit.

38.9 Flash Memory Protection

Flash memory protection prevents the flash memory from being read or rewritten by the third party.
The boot mode ID code protection is for connecting the serial programmer, and the on-chip debugging emulator ID code protection is for connecting the on-chip debugging emulator.

38.9.1 ID Code Protection

There are two types of ID code protection: Boot mode ID code protection for connecting the serial programmer and on-chip debugging emulator ID code protection is for connecting the on-chip debugging emulator. The same ID codes are used for both functions, but operations differ.
ID codes consist of the control code and ID code 1 to ID code 15. Set ID codes to four 32-bit data in 32-bit units. Figure 38.26 shows the ID code configuration.

	31 – 24	23 – 16	15 – 8	7 – 0
FFFF FFA0h	Control code	ID code 1	ID code 2	ID code 3
FFFF FFA4h	ID code 4	ID code 5	ID code 6	ID code 7
FFFF FFA8h	ID code 8	ID code 9	ID code 10	ID code 11
FFFF FFAChh	ID code 12	ID code 13	ID code 14	ID code 15

Figure 38.26 ID Code Configuration

The following shows a program example for setting ID codes.
This is an example when setting the control code to 45h and setting ID codes to 01h, 02h, 03h, 04h, 05h, 06h, 07h, 08h, 09h, 0Ah, 0Bh, 0Ch, 0Dh, 0Eh, and 0Fh (from the ID code 1 field to the ID code 15 field).

C language:

```
#pragma address ID_CODE = 0xFFFFFFA0
const unsigned long ID_CODE [4] = {0x45010203, 0x04050607,0x08090A0B, 0x0C0D0E0F};
```

Assembly language:

```
.SECTION ID_CODE,CODE
.ORG 0FFFFFFA0h
.LWORD 45010203h
.LWORD 04050607h
.LWORD 08090A0Bh
.LWORD 0C0D0E0Fh
```

38.9.1.1 Boot Mode ID Code Protection

Boot mode ID code protection disables reading and programming of the user area and data area when the serial programmer is connected by the third party.
When the control code indicates 45h or 52h (boot mode ID code protection is enabled), the MCU compares 16-byte ID code sent from the serial programmer with the ID code in the user area. According to the comparison result, reading and programming the user area and data area are enabled.
When the control code indicates a value other than 45h and 52h (boot mode ID code protection is disabled), all blocks in the user area and data area are erased, and reading and programming the user area and data area are enabled.

The control code is used to enable or disable protection. Table 38.11 lists the specifications of boot mode ID code protection, and Figure 38.27 shows the authentication flow of boot mode ID code protection.
ID code 1 to ID code 15 can be set to any desired value.
However, only when disabling connection with the serial programmer, the ID codes must be set to 50h, 72h, 6Fh, 74h, 65h, 63h, 74h, FFh, FFh, FFh, FFh, FFh, FFh, FFh, and FFh (from the ID code 1 field to the ID code 15 field).

Table 38.11 Boot Mode ID Code Protection Specifications

ID Code				
Control Code	**ID Code 1 to ID Code 15**	**Protection**	**ID Code Matching Result**	**Operation**
45h	Any desired value	Enabled	Matched	Exit the boot mode ID code authentication state and enter the program/erase host command wait state.
			Not matched	Continue the boot mode ID code authentication state.
			Not matched three times consecutively	Erase all blocks in the user area and data area, and continue boot mode ID code authentication state.
52h	50h, 72h, 6Fh, 74h, 65h, 63h, 74h, FFh, ..., and FFh (8 bytes are all FFh)	Enabled	N/A	Disable reading or rewriting of the flash memory, regardless of the codes sent from the serial programmer.
	Other than above		Matched	Exit the boot mode ID code authentication state and enter the program/erase state.
			Not matched	Continue the boot mode ID code authentication state.
Other than above	Any desired value	Disabled	N/A	Erase all blocks in the user area and data area.

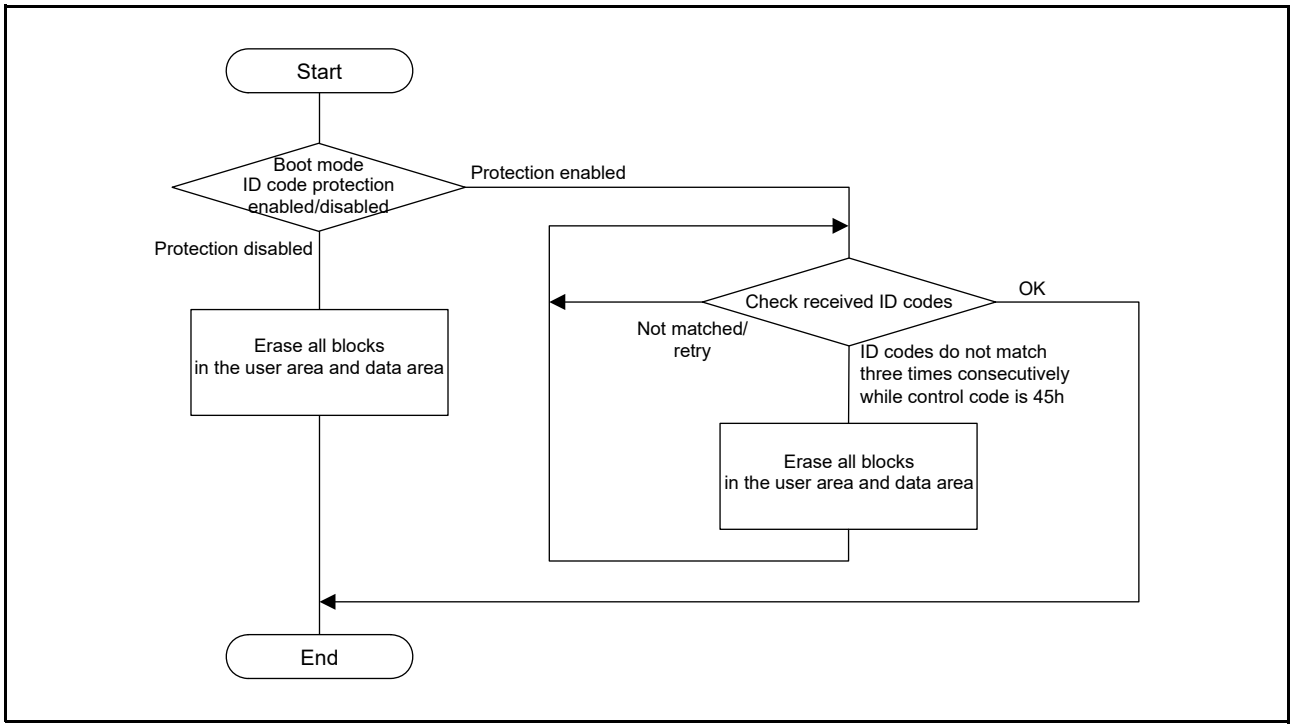

Figure 38.27 Authentication for Boot Mode ID Code Protection

38.9.1.2 On-Chip Debugging Emulator ID Code Protection

On-chip debugging emulator ID code protection enables or disables connection with the on-chip debugging emulator. When the on-chip debugging emulator ID code protection is disabled, connection with the on-chip debugging emulator is enabled. When 16-byte ID codes sent from the on-chip debugging emulator and ID codes in the user area match while on-chip debugging emulator ID code protection is enabled, connection with the on-chip debugging emulator is also enabled.

Table 38.12 lists the specifications of on-chip debugging emulator ID code protection.

Table 38.12 On-Chip Debugging Emulator ID Code Protection Specifications

ID Code				
Control Code	**ID Code 1 to ID Code 15**	**Protection**	**ID Code Matching Result**	**Operation**
FFh	FFh,…, and FFh (15 bytes are all FFh)	Disabled	N/A	Enable connection with the on-chip debugging emulator.
52h	50h, 72h, 6Fh, 74h, 65h, 63h, and 74h + any 8 bytes	Enabled	N/A	Disable connection with the on-chip debugging emulator, regardless of the codes sent from the on-chip debugging emulator.
Other than above	Other than above	Enabled	Matched	Enable connection with the on-chip debugging emulator.
			Not matched	Continue the ID code wait state.

38.10 Communication Protocol

This section describes the protocol used in boot mode. When developing a serial programmer, control with this communication protocol.

38.10.1 State Transition in Boot Mode (SCI Interface)

Figure 38.28 shows the state transition in boot mode (SCI interface).

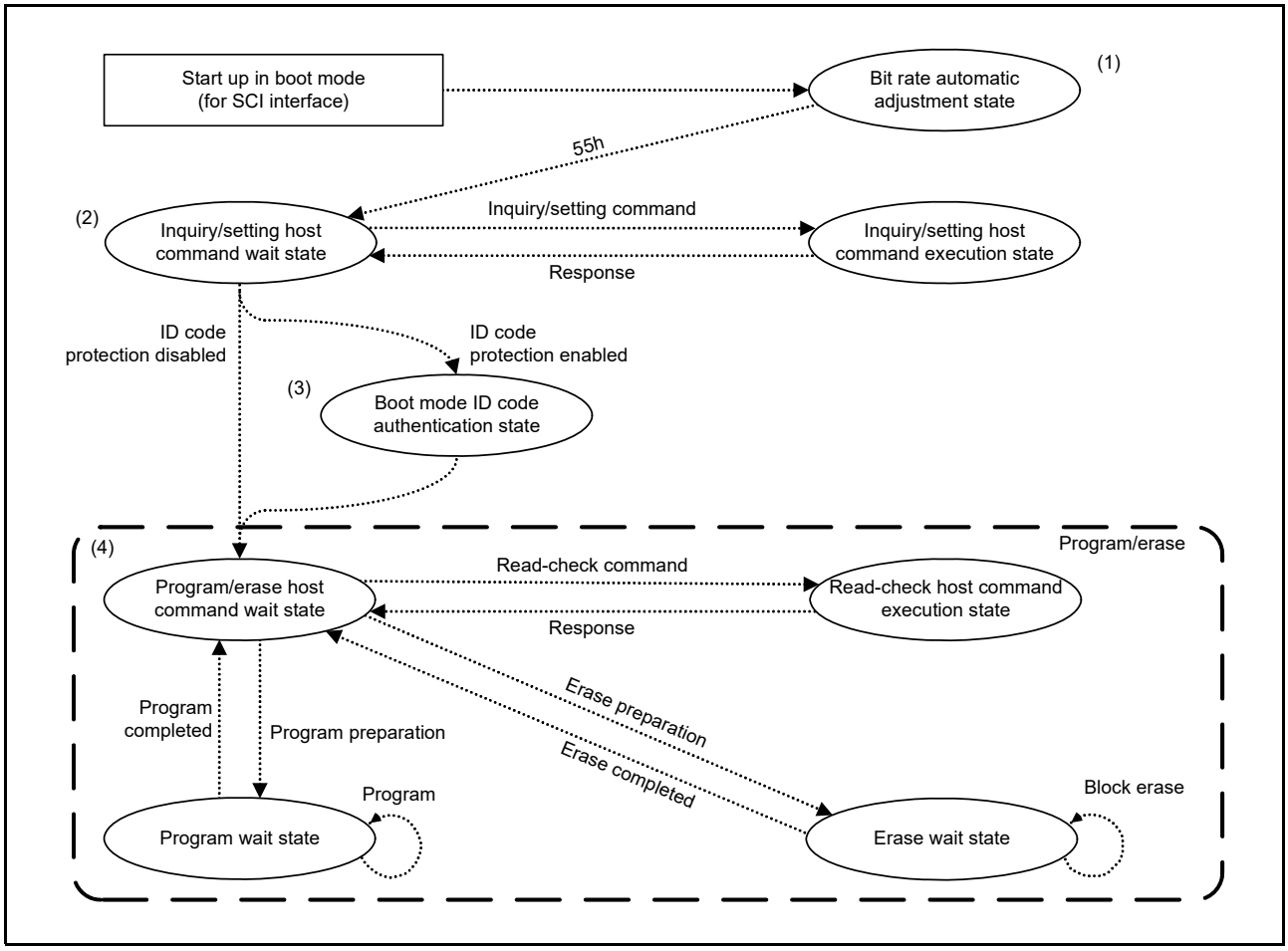

Figure 38.28 Boot Mode (SCI Interface) State Transition

(1) Bit rate automatic adjustment state
In this state, the bit rate is automatically adjusted to 9,600 or 19,200 bps for communication with the host.
When the bit rate adjustment is completed, the MCU sends 00h to the host. After that, when the MCU receives 55h sent from the host, the MCU sends E6h to the host, and enters the inquiry/setting host command wait state.
The host must not send data until 400 ms elapse after a reset of the MCU is released.

(2) Inquiry/setting host command wait state
In this state, the host can make inquiries for the MCU information including block configuration, size, and addresses where the user area and data area are allocated, and select the endian of data and a bit rate.
When the MCU receives the program/erase host state transition command from the host, it determines whether boot mode ID code protection is enabled or disabled. If boot mode ID code protection is disabled, the MCU enters the inquiry/setting host command wait state. If boot mode ID code protection is enabled, the MCU enters the boot mode ID code authentication state.
Refer to section 38.10.5, Inquiry Commands and section 38.10.6, Setting Commands for details on inquiry/setting commands.

(3) Boot mode ID code authentication state
In this state, the MCU accepts the ID code authentication command.
When boot mode ID codes do not match, the MCU remains in the boot mode ID code authentication state.
Refer to section 38.9.1.1, Boot Mode ID Code Protection for details on boot mode ID code protection. Refer to section 38.10.7, ID Code Authentication Command for details on the ID code authentication command.

(4) Program/erase state
In this state, the MCU executes program/erase or read-check commands according to commands sent from the host.
Refer to section 38.10.8, Program/Erase Commands for details on program/erase commands. Refer to section 38.10.9, Read-Check Commands for details on read-check commands.

38.10.2 Command and Response Configuration

The communication protocol is composed of a “Command” sent from the host to the MCU and a “Response” sent from the MCU to the host. Commands include 1-byte commands and multiple-byte commands. Responses include 1-byte responses, multiple-byte responses, and error responses.
A multiple-byte command and multiple-byte response have “Size” for informing the number of transmit/receive data bytes and “SUM” for detecting communication errors.
“Size” indicates the number of transmit/receive data bytes excluding Command code (the first byte), Size, and SUM.
“SUM” indicates byte data that is calculated so the total bytes of Command or Response becomes 00h.
The flash memory addresses for reading are used as the following addresses: the program address specified in the program command, the block start address specified in the block erase command, the AW start and end addresses specified in the access window information program command, and the AW start and end addresses received in the access window read command.

38.10.3 Response to Undefined Commands

When the MCU receives an undefined command, it sends a command error as a response. The contents of the response are shown below. “Command code” in the error response stores the first byte of the command sent from the MCU.

Error response	80h	Command code

38.10.4 Boot Mode Status Inquiry

This command is used to check the current state and which type of an error occurred immediately after a command issued in the boot program.

Table 38.13 and Table 38.14 list a state or error that the MCU responds to.

The boot mode status inquiry command can be used in the inquiry/setting host command wait state and program/erase host command wait state.

Command	4Fh				
Response	5Fh	Size	State	Error	SUM

Size (1 byte): Total bytes of “State” and “Error” (the value is always 02h)
State (1 byte): MCU’s current state (see Table 38.13)
Error (1 byte): Information about the error occurred in response to a command issued immediately before (see Table 38.14)
SUM (1 byte): Value that is calculated so the sum of response data is 00h

Table 38.13 Information Regarding the States

Code	State*1	Description
11h	Inquiry/setting host command wait state	Device selection wait state
12h/13h		Operating frequency selection wait state
1Fh		Program/erase host command wait state transition command wait state
31h	Boot mode ID code authentication state	The user area and data area are being erased
3Fh	Program/erase host command wait state	Program/erase command wait state
4Fh		Program data reception wait state
5Fh		Block erase specification wait state

Note 1. Refer to Figure 38.28 for details on the states.

Table 38.14 Error Information

Code	Description
00h	No error
11h	SUM error
21h	Device code error
24h	Bit rate selection error
29h	Block start address error
2Ah	Address error
2Bh	Data length error
51h	Erase error
52h	Not blank (blank check error)
53h	Program error
61h	ID code do not match
63h	ID code do not match and erase error
80h	Command error
FFh	Bit rate automatic adjustment error

38.10.5 Inquiry Commands

Inquiry commands are used to obtain necessary information for sending setting commands, program/erase commands, and read-check commands. Table 38.15 lists the inquiry commands. These commands can only be used in the inquiry/setting host command wait state.

Table 38.15 Inquiry Commands

Command	Description
Supported device inquiry	Inquiry for the device code and series name
Data area availability inquiry	Inquiry for the availability of the data area
User area information inquiry	Inquiry for the number of user areas, and the start and end addresses of the user area
Data area information inquiry	Inquiry for the number of data areas, and the start and end addresses of the data area
Block information inquiry	Inquiry for the start address, the block size, and the number of blocks of each of the user and data areas

38.10.5.1 Supported Device Inquiry

This command is used to obtain the device information for identifying the endian of developed software.
When the MCU receives this command, it sends the device information when developed software uses little endian data and the device information when developed software uses big endian data in this order.

Command

20h

Response

30h	Size	Number of devices

Number of characters	Device code for little endian	Series name for little endian
Number of characters	Device code for big endian	Series name for big endian
SUM		

Size (1 byte): Total bytes of Number of Devices, Characters, Device code, and Series name
Number of devices (1 byte): Number of endian types that the MCU supports (the value is always 02h)
Number of characters (1 byte): Number of characters for the device code and device name
Device code (4 bytes): Identification code indicating the endian of developed software
Series name (n bytes): The series name of the MCU (ASCII code) and the classification of little endian/big endian
SUM (1 byte): Value that is calculated so the sum of response data is 00h

38.10.5.2 Data Area Availability Inquiry

When the MCU receives this command, it sends the result indicating that the data area is available, area protection can be used, and the data area program command is available.

Command	2Ah			
Response	3Ah	Size	Availability	SUM

Size (1 byte): Number of characters of Availability (the value is always 01h)
Availability (1 byte): Availability of the data area (the value is always 1Dh)
1Dh represents the data area is available, area protection can be used, and data area program command is available.
SUM (1 byte): Value that is calculated so the sum of response data is 00h (the value is always A8h)

38.10.5.3 User Area Information Inquiry

When the MCU receives this command, it sends the number of user areas and addresses.

Command	25h		
Response	35h	Size	Number of areas
	Area start address		
	Area end address		
	SUM		

Size (1 byte): Total bytes of Number of areas, Area start address, and Area end address (the value is always 09h)
Number of areas (1 byte): Number of user areas (the value is always 01h)
Area start address (4 bytes): Start address of the user area
Area end address (4 bytes): End address of the user area
SUM (1 byte): Value that is calculated so the sum of the response data is 00h

38.10.5.4 Data Area Information Inquiry

When the MCU receives this command, it sends the number of data areas and addresses.

Command	2Bh		
Response	3Bh	Size	Number of areas
	Area start address		
	Area end address		
	SUM		

Size (1 byte): Total bytes of data of Number of areas, Area start address, and Area end address (the value is always 09h)
Number of areas (1 byte): Number of areas in the data area (the value is always 01h)
Area start address (4 bytes): Start address of the data area (the value is always 0010 0000h)
Area end address (4 bytes): End address of the data area (the value is always 0010 1FFFh)
SUM (1 byte): Value that is calculated so the sum of the response data is 00h (the value is always 7Dh)

38.10.5.5 Block Information Inquiry

When the MCU receives this command, it sends the start address, the size of one block, and the number of blocks in the user area and data area.

Command	26h		
Response	36h	Size	DDh
	Start address of the user area		
	Block size of one block for the user area		
	Number of blocks of the user area		
	Start address of the data area		
	Block size of one block for the data area		
	Number of blocks of the data area		
	SUM		

Size (2 bytes): Total bytes of data from DDh to Number of blocks of the data area (the value is always 00 19h)
Start address of the user area (4 bytes): Start address of the user area
Block size of one block for the user area (4 bytes): Memory size of one block (the value is always 00 00 08 00h)
Number of blocks of the user area (4 bytes): Number of blocks in the user area
Start address of the data area (4 bytes): Start address of the data area (the value is always 00 10 00 00h)
Block size of one block for the data area (4 bytes): Memory size of one block (the value is always 00 00 04 00h)
Number of blocks of the data area (4 bytes): Number of blocks in the data area (the value is always 00 00 00 08h)
SUM (1 byte): Value that is calculated so the sum of response data is 00h

38.10.6 Setting Commands

Setting commands are used to configure the settings necessary to execute program/erase commands in the MCU. Table 38.16 lists setting commands. These commands can be used only in the inquiry/setting host command wait state.

Table 38.16 Setting Commands

Command	Function
Device select	Select a device code.
Operating frequency select	Change the bit rate for communication.
Program/erase host command wait state transition	Enter the program/erase host command wait state or boot mode ID code authentication state.

38.10.6.1 Device Select

This command is used to specify the endian of developed software. Select a device code from among the device codes obtained in the response to the support device inquiry command.
If the received device code matches the supported device, the MCU sends a response (46h).
If the device is not supported or the SUM of the received command does not match, the MCU sends an error response.

Command	10h	Size	Device code	SUM

Size (1 byte): Number of characters of the device code (the value is always 04h)
Device code (4 bytes): Identification code to identify an endian of the developed software
(code in the response to the support device inquiry command)
SUM (1 byte): Value that is calculated so the sum of command data is 00h

Response	46h

Error response	90h	Error

Error (1 byte): Error code
11h: SUM error
21h: Device code error

38.10.6.2 Operating Frequency Select

This command is used to specify the operating frequency of the MCU and a bit rate for communication with the flash memory programmer. The bit rate selected in this command should be set to a value with error of less than 4% compared to the bit rate obtained by dividing 32 or 8 MHz that corresponds to the operating voltage.
If the specified settings can be supported, the MCU sends a response (06h). If the bit rate error is 4% or more or the SUM of the received command does not match, the MCU sends an error response.

After the host receives a response, wait for at least a 1-bit period at the old bit rate, and send communication confirmation data at the new bit rate.
If the MCU successfully receives communication confirmation data, the MCU sends a response (06h). If the MCU fails to receive the communication confirmation data, the MCU sends an error response.

Command	3Fh	Size	Bit rate	Dummy data
	Number of clocks	Multiplier 1	Multiplier 2	
	SUM			

Size (1 byte): Total bytes of data of Bit rate, Dummy data, Number of clocks, and Multiplier (the value is always 07h)
Bit rate (2 bytes): New bit rate
The value is calculated by dividing the bit rate by 100 (Example: Set 00C0h for 19200 bps)
Dummy data (2 bytes): The value should always be set to 0000h
Number of clocks (1 byte): Types of clocks for multiplier setting (the value is always 02h)
Multiplier 1 (1 byte): Multiplier of the system clock (ICLK) (the value is always 01h)
Multiplier 2 (1 byte): Multiplier of the peripheral module clock (PCLK) (the value is always 01h)
SUM (1 byte): Value that is calculated so the sum of command data including dummy data is 00h

Response	06h	

Error response	BFh	Error

Error (1 byte): Error code
11h: SUM error
24h: Bit rate selection error

Communication confirmation	06h

Response	06h

Error response	FFh

- Bit rate selection error

A bit rate selection error occurs when the bit rate specified with the operating frequency select command cannot be set to a value with error of less than 4%. When the new bit rate specified with the operating frequency select command is B, and 32 (MHz) or 8 (MHz) corresponding to the operating voltage is Pφ, the bit rate error is calculated by the following formula:

$$\text{Error}(\%) = \left(\frac{P\varphi \times 10^6}{B \times 16 \times N} - 1\right) \times 100$$

$$N = \text{INT}\left(\frac{P\varphi \times 10^6}{B \times 16}\right)$$

Pφ: 32 (MHz) when the operating voltage is 3.0 V or above
8 (MHz) when the operating voltage is below 3.0 V
B: New bit rate (bps)
N: Ratio between Pφ and the new bit rate multiplied by 16 (however, 1 ≤ N ≤ 256)

38.10.6.3 Program/Erase Host Command Wait State Transition

This command is used for the transition from the inquiry/setting host command wait state to the program/erase host command wait state.
When the MCU receives this command, it determines whether boot mode ID code protection is enabled or disabled.

When boot mode ID code protection is disabled, all blocks in the user area and data area are erased.
When all blocks are successfully erased, the MCU sends a response (06h) and enters the program/erase host command wait state. If not all blocks are successfully erased, the MCU sends an error response.
When boot mode ID code protection is enabled, the MCU sends a response (16h) and enters boot mode ID code authentication state.

Command	40h

Response	ACK

ACK (1 byte): ACK code
06h: ID code protection is disabled.
16h: ID code protection is enabled.

Error response	C0h	Error

Error (1 byte): Error code
51h: Erase error

38.10.7 ID Code Authentication Command

This command is used for ID code authentication when boot mode ID code protection is enabled.
Table 38.17 lists ID code authentication command. This command can be used only in the boot mode ID code authentication state.

Table 38.17 ID Code Authentication Command

Command	Function
ID code check	Compare the 16-byte code sent from the host and ID code.

38.10.7.1 ID Code Check

This command is used to unlock boot mode ID code protection.
The comparison ID code specified with the command should be set to the same value as the control code and ID code 1 to ID code 15.
If the comparison ID code sent from the host matches the ID code programmed in the user area, the MCU sends a response (06h) and enters program/erase host command wait state.
If the codes do not match or the SUM of the received command does not match, the MCU sends an error response.
When the ID codes do not match three times consecutively while the control code is 45h, all blocks in the user area and data area are erased. If an error occurs during erasure, the MCU sends an error response.
Also, even if all blocks are successfully erased, the MCU sends an error response and continues the boot mode ID code state. Reset the MCU to enter the program/erase host command wait state.

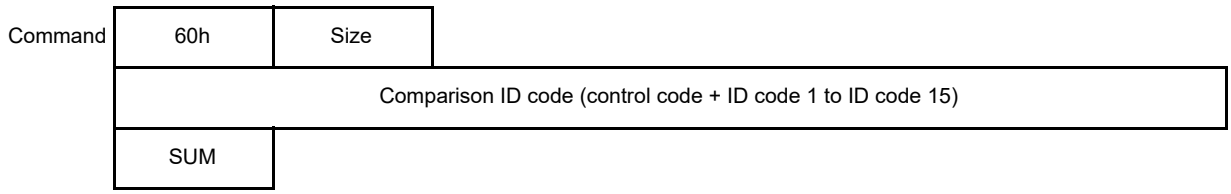

Size (1 byte): Number of bytes of ID codes (the value is always 10h)
ID code (16 bytes): Control code (1 byte) + ID code 1 to ID code 15 (15 bytes)
SUM (1 byte): Value that is calculated so the sum of the command data is 00h

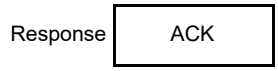

ACK (1 byte): ACK code
06h: The MCU enters the program/erase host command wait state.

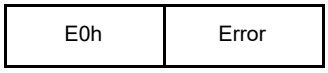

Error (1 byte): Error code
11h: SUM error
61h: ID codes do not match
63h: ID codes do not match and erase error

38.10.8 Program/Erase Commands

Program/erase commands are used to program or erase the user area or data area based on the response to inquiry commands. Table 38.18 lists commands used in each of the program/erase host command wait state, program wait state, and erase wait state. Table 38.19 lists commands that can be accepted in each state.
When a command that is not listed in Table 38.19 is received in each state, the MCU sends a command error response.

Table 38.18 Program/Erase Commands

Command	Function
User/data area program preparation	Select the user area or data area to program, and enter the program wait state.
Program	Program the specified data to the selected area in the user area or data area. Or enter the program/erase host command wait state (end of program).
Data area program	Program the specified-size data to the selected area in the data area. Or enter the program/erase host command wait state (end of program).
Erase preparation	Enter the erase wait state.
Block erase	Erase the selected block, or enter the program/erase host command wait state (end of erase).

Table 38.19 Acceptable Commands for Each State

State	Acceptable Command
Program/erase host command wait state	User/data area program preparation command, and erase preparation command
Program wait state	Program command and data area program command
Erase wait state	Block erase command

38.10.8.1 User/Data Area Program Preparation

This command is used to prepare for accepting the program command and the data area program command.
When the MCU receives this command, it recognizes that an instruction to prepare for the program command is issued from the host. Then, the MCU enters the program wait state, where only the program command and the data area program command can be accepted, and sends a response (06h).

Command	43h
Response	06h

38.10.8.2 Program

This command is used to program the specified data to the user area or data area. Set the lower 8 bits to 0 for the program address selected in this command. When the data length is shorter than 256 bytes, the data cannot be programmed. Fill the gaps with FFh.
When the program from the selected address is successfully completed, the MCU sends a response (06h). If the SUM of the received command does not match or an error occurs during a program operation, the MCU sends an error response.

To enter the program/erase host command wait state after the program operation ends, send 50h FFh FFh FFh FFh B4h from the host. The MCU sends a response (06h), and enters the program/erase host command wait state.

Command	50h	Program address
	Program data	
	SUM	

Program address (4 bytes): Address for program destination
Set the lower 8 bits to 0
Set FFFF FFFFh for end of program
Program data (n bytes): Program data (n = 256, 0 for end of program)
When the program data is less than n bytes, set FFh for the missing data.
No program data for the end of program
SUM (1 byte): Value that is calculated so the sum of command data is 00h

Response	06h

Error response	D0h	Error

Error (1 byte): Error code
11h: SUM error
2Ah: Address error (the address is not in the selected area.)
53h: Program error (the data cannot be programmed.)

38.10.8.3 Data Area Program

This command is used to program the specified data to the data area. Set the lower 2 bits to 0 for the program address selected in this command. When the data length is shorter than 4 bytes, the data cannot be programmed. Fill the gaps with FFh.
When the program from the selected address is successfully completed, the MCU sends a response (06h). If the SUM of the received command does not match or an error occurs during a program operation, the MCU sends an error response.

To enter the program/erase host command wait state after the program operation ends, send 51h FFh FFh FFh FFh 00h B3h from the host. The MCU sends a response (06h), and enters the program/erase host command wait state.

Command	51h	Program address	Program data length
	Program data		
	SUM		

Program address (4 bytes): Address for program destination
Set the lower 2 bits of the selected address to 0
Set FFFF FFFFh for end of data area program
Program data length (1 byte): Size of program data
Set 4-byte data
Set 00h for end of data area program
Program data (n bytes): Program data for the data area (n = program data length, 0 for end of program)
Set data of the program data length
When the program is less than n bytes, set FFh for the missing data.
No program data for the end of data area program
SUM (1 byte): Value that is calculated so the sum of command data is 00h

Response	06h	

Error response	D1h	Error

Error (1 byte): Error code
11h: SUM error
2Ah: Address error (the address is not in the selected area.)
2Bh: Program data length error
53h: Program error (the data or program data cannot be programmed.)

38.10.8.4 Erase Preparation

This command is used to prepare for accepting the block erase command.
When the MCU receives this command, it recognizes that an instruction to prepare for the erase command is issued from the host. Then, the MCU enters the erase wait state, where only the block erase command can be accepted, and sends a response (06h).

Command	48h
Response	06h

38.10.8.5 Block Erase

This command is used to erase the selected block in the user area or data area.
Specify the block start address selected in the command by calculating the address based on the response to the block information inquiry command.
When the block selected in the block start address is successfully erased, the MCU sends a response (06h). If the SUM of the received command does not match or an error occurs during an erase operation, the MCU sends an error response.

To enter the program/erase host command wait state after the erase operation ends, send 59h 04h FFh FFh FFh FFh A7h from the host. The MCU enters the program/erase host command wait state and sends a response (06h).

Command	59h	Size
	Block start address	
Response	SUM	

Size (1 byte): Total bytes of Block start address (the value is always 04h)
Block start address (4 bytes): Start address of the block that is erased
Set FFFF FFFFh for end of erase
SUM (1 byte): Value that is calculated so the sum of response data is 00h

Response	06h	
Error response	D9h	Error

Error (1 byte): Error code
11h: SUM error
29h: Block start address error
51h: Erase error (the selected block cannot be erased)

38.10.9 Read-Check Commands

Read-check commands are used to read data or check whether data is programmed in the user area or data area in the MCU based on the response to inquiry commands.
Table 38.20 lists read-check commands used in the program/erase host command wait state.

Table 38.20 Read-Check Commands

Command	Function
Memory read	Read data from the user area or data area.
User area checksum	Obtain the checksum of the entire user area.
Data area checksum	Obtain the checksum of the entire data area.
User area blank check	Check whether data is programmed in the user area.
Data area blank check	Check whether data is programmed in the data area.
Access window information program	Set the access window.
Access window read	Read the settings of the access window.

38.10.9.1 Memory Read

This command is used to read data programmed in the user area or data area.
For a read start address selected in the command, set a value within the range from the area start address to the area end address received in the response to the user area information inquiry command or the data area information inquiry command.
For a read size selected in the command, set a value so the sum of the read start address and the read size is within the range from the area start address to the area end address received in the response to the user area information inquiry command or the data area information inquiry command.
When the MCU performs a read successfully, it sends data of the specified range. If the SUM of the received command does not match or the MCU fails to perform a read successfully, it sends an error response.

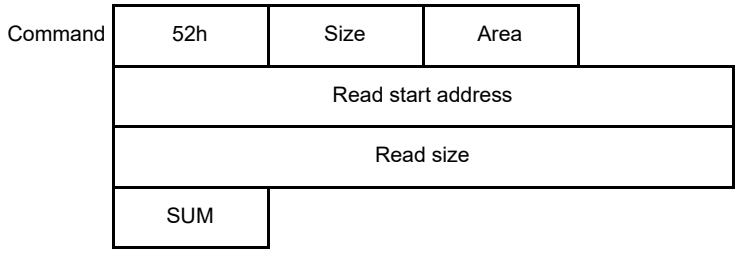

Size (1 byte): Total bytes for Read start address and Read size
Area (1 byte): Area that is read
01h: User area or data area
Read start address (4 bytes): Start address of the area that is read
Read size (4 bytes): Size of data that is read (in bytes)
SUM (1 byte): Value that is calculated so the sum of response data is 00h

Response	52h	Read size
	Read data	
	SUM	

Read size (4 bytes): Size of Data that is read (in bytes)
Read data (n bytes): Data read from the specified range (n = read size)
SUM (1 byte): Value that is calculated so the sum of response data is 00h

Error response	D2h	Error

Error (1 byte): Error code
11h: SUM error
2Ah: Address error
- A value other than 01h is set for the “Area” field.
- The read start address is not in the selected area.

2Bh: Size error
- The read size is set to 0000 0000h.
- The read size exceeds the area size.
- The address calculated from the read start address and read size is not in the selected area.

38.10.9.2 User Area Checksum

This command used to obtain the checksum of the entire user area.
When the MCU receives this command, it adds data from the start address to the end address in bytes in the user area, and sends the calculated result (checksum) as a response.

Command	4Bh	

Response	5Bh	Size
	User area checksum	
	SUM	

Size (1 byte): Number of bytes for checksum of the user area (the value is always 04h)
User area checksum (4 bytes): Calculated result of the data in the user area in bytes
SUM (1 byte): Value that is calculated so the sum of response data is 00h

38.10.9.3 Data Area Checksum

This command used to obtain the checksum of the entire data area.
When the MCU receives this command, it adds data from the start address to the end address in bytes in the data area, and sends the calculated result (checksum) as a response.

Command	61h	
Response	71h	Size
	Data area checksum	
	SUM	

Size (1 byte): Number of bytes for checksum of the data area (the value is always 04h)
Data area checksum (4 bytes): Calculated result of the data in the data area in bytes
SUM (1 byte): Value that is calculated so the sum of response data is 00h

38.10.9.4 User Area Blank Check

This command is used to check whether data is programmed in the user area.
When the MCU receives this command, it checks whether there is data in the entire user area. If there is no programmed data, the MCU sends a response (06h). If there is at least 1 byte of programmed data, the MCU sends an error response.

Command	4Dh	
Response	06h	
Error response	CDh	Error

Error (1 byte): Error code
52h: Not blank

38.10.9.5 Data Area Blank Check

This command is used to check whether data is programmed in the user area.
When the MCU receives this command, it checks whether there is programmed data in the entire user area. If there is no programmed data, the MCU sends a response (06h). If there is at least 1 byte of programmed data, the MCU sends an error response.

Command	62h	
Response	06h	
Error response	E2h	Error

Error (1 byte): Error code
52h: Not blank

38.10.9.6 Access Window Information Program

This command is used to set the access window used for area protection.
For the access window start address selected in the command, set the start address of the start block. For the access window end address, set the end address of the end block.
When the specified access window settings are successfully completed, the MCU sends a response (06h). If the SUM of the received command does not match or an error occurs during the access window settings, the MCU sends an error response.
For details on the access window, see section 38.6, Area Protection.

Command	74h	05h	Access window	
	Access window start address LH	Access window start address HL	Access window end address LH	Access window end address HL
	SUM			

Access window (1 byte): Set the access window or clear the access window settings
Set 00h to set the access window
Set FFh to clear the access window settings
Access window start address LH (1 byte): Start address of the access window (A15 to A8)
Set A15 to A8 of the start address of the start block.
Set FFh to clear the access window settings
Access window start address HL (1 byte): Start address of the access window (A23 to A16)
Set A23 to A16 of the start address of the start block.
Set FFh to clear the access window settings
Access window end address LH (1 byte): End address of the access window (A15 to A8)
Set A15 to A8 of the end address of the end block.
Set FFh to clear the access window settings
Access window end address HL (1 byte): End address of the access window (A23 to A16)
Set A23 to A16 of the end address of the end block.
Set FFh to clear the access window settings
SUM (1 byte): Value that is calculated so the sum of response data is 00h

Response	06h	

Error response	F4h	Error

Error (1 byte): Error code
11h: SUM error
2Ah: Address error (specified address is not in the area)
53h: Program error (access window cannot be set)

38.10.9.7 Access Window Read

This command is used to check the set range of the access window.
When the MCU successfully obtains the access window range, the MCU sends the access window start address and end address that it read. If the SUM of the received command does not match, the MCU sends an error response.

Command	73h	01h	FFh	8Dh

Response	73h	05h		
	Access window start address LH	Access window start address HL	Access window end address LH	Access window end address HL
	FFh			
	SUM			

Access window start address LH (1 byte): Start address of the access window range (A15 to A8)
Access window start address HL (1 byte): Start address of the access window range (A23 to A16)
Access window end address LH (1 byte): End address of the access window range (A15 to A8)
Access window end address HL (1 byte): End address of the access window range (A23 to A16)
SUM (1 byte): Value that is calculated so the sum of response data is 00h

Error response	F3h	Error

Error (1 byte): Error code
11h: SUM error

38.11 Serial Programmer Operation in Boot Mode (SCI Interface)

The following describes the procedure for the serial programmer to program/erase the user area and data area in boot mode (SCI Interface).

1. Automatically adjust the bit rate
2. Receive the MCU information*1
3. Select the device and change the bit rate
4. Enter the program/erase host command wait state
5. Unlock boot mode ID code protection
6. Erase the user area and data area*2, *3
7. Program the user area and data area*2, *3
8. Check data in the user area*2
9. Check data in the data area*2
10. Set the access window in the user area*2
11. Reset the MCU

Note 1. If the necessary information has been already received, step 2 can be skipped.
Note 2. Processing steps from 6 to 10 can be proceeded as necessary, and their order can be changed.
Note 3. When a timeout occurs or invalid response data is received, stop the operation and perform step 11 (reset the MCU).

Refer to section 38.10.5, Inquiry Commands, section 38.10.6, Setting Commands, section 38.10.7, ID Code Authentication Command, section 38.10.8, Program/Erase Commands, and section 38.10.9, Read-Check Commands for details on the commands used in the above steps 2 to 10.

38.11.1 Bit Rate Automatic Adjustment

The MCU measures the low width of data 00h that is sent from the serial programmer at 9,600 or 19,200 bps to automatically adjust the bit rate.

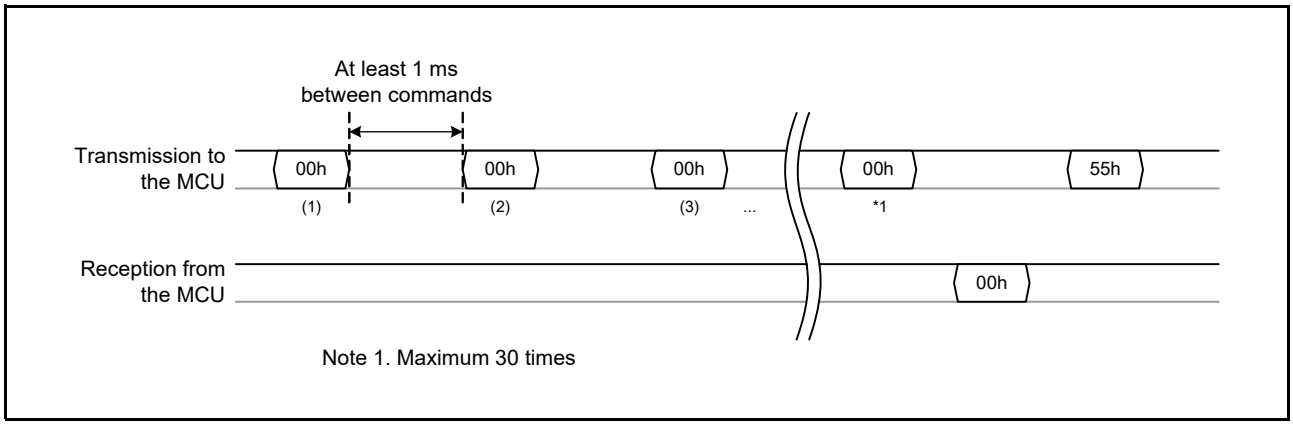

Figure 38.29 Transmit/Receive Data for Bit Rate Automatic Adjustment

After starting up in boot mode, wait for at least 400 ms and then send 00h to the MCU from the serial programmer. When the bit rate adjustment is completed, the MCU sends 00h to the programmer. When the programmer receives 00h, send 55h to the MCU from the programmer. When the programmer can not receive 00h, wait for at least 1 ms and send 00h to the MCU again. When the programmer fails to receive 00h even if it send 00h 30 times, restart the MCU in boot mode and perform the automatic adjustment for the bit rate again.
When the MCU receives 55h, the MCU sends E6h and enters the inquiry/setting command wait state. If the MCU fails to receive 55h, the MCU sends FFh. When the programmer receives FFh, restart the MCU in boot mode, and perform the automatic adjustment for the bit rate again.

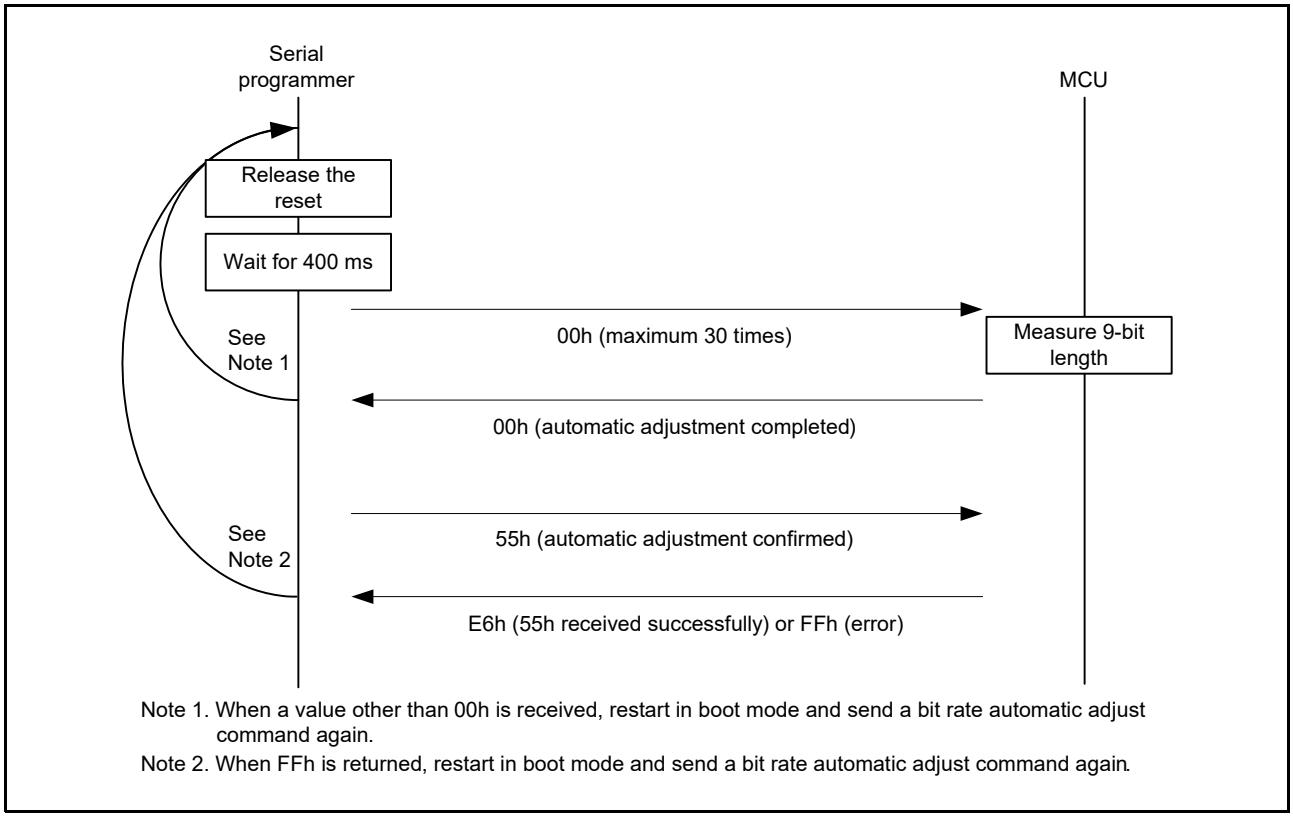

Figure 38.30 Bit Rate Automatic Adjustment Procedure

38.11.2 Receive the MCU Information

Procedure to send inquiry commands, and receive the information necessary to send setting commands, program/erase commands, and read-check commands is as follows.

(1) Send a support device inquiry command (20h) to check what type of endianness the MCU supports. The MCU returns all device codes and series names that it supports.
(2) Send a user area information inquiry command (25h) to check the start and end addresses of the user area. The MCU returns the start and end addresses of the user area.
(3) Send a block information inquiry command (26h) to check the block configuration. The MCU returns the start address, the size of one block, and the number of blocks for the user area and data area.
(4) Send a data area information inquiry command (2Bh) to check the start and end addresses of the data area. The MCU returns the start and end addresses of the data area.

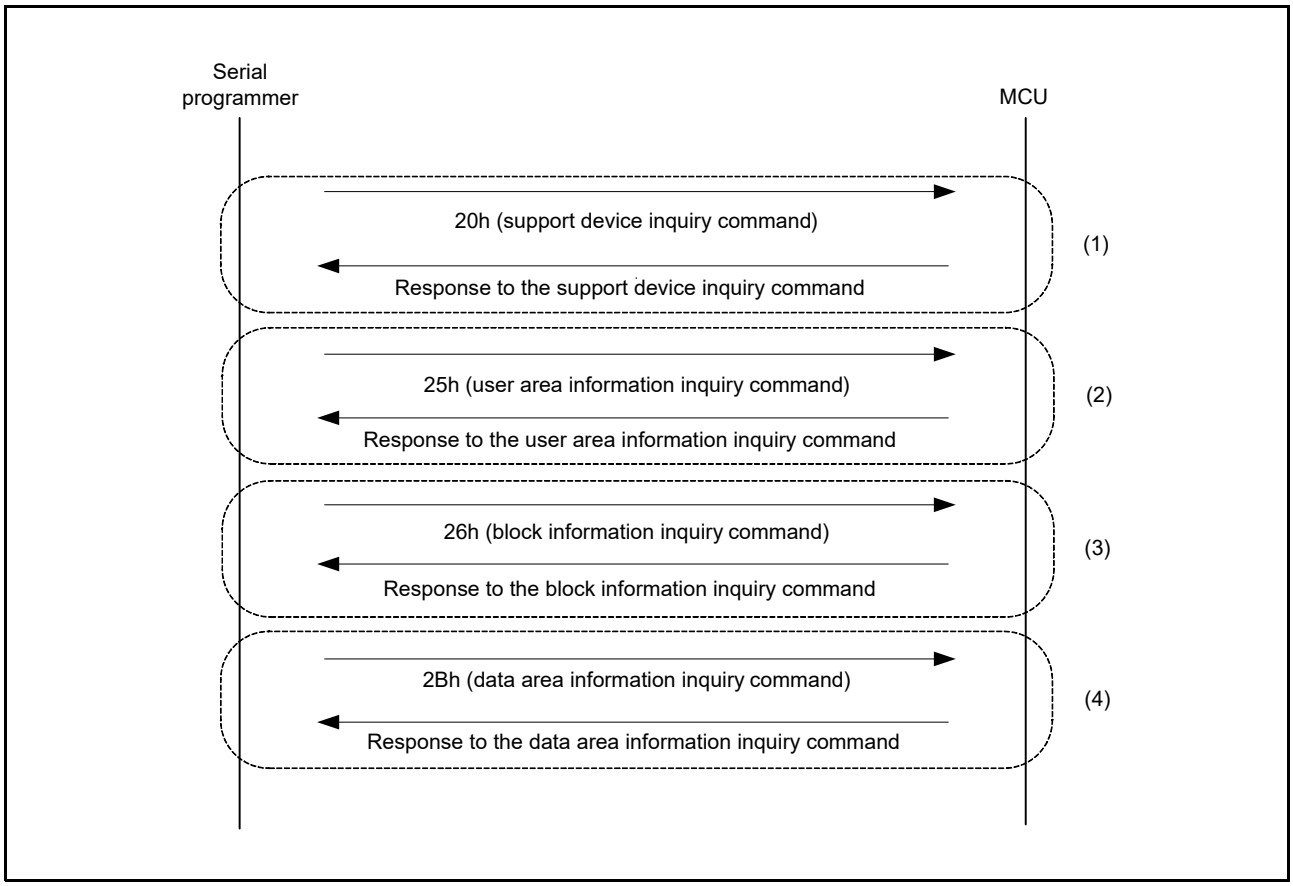

Figure 38.31 Procedure to Receive the MCU Information

38.11.3 Select the Device and Change the Bit Rate

Procedure to select the device to connect with the serial programmer and to change the bit rate for communication is as follows.

(1) Send the device select command (10h). Select the device code according to the endian of developed software.
(2) Send the operating frequency select command (3Fh) to change the communication bit rate from 9,600 or 19,200 bps.

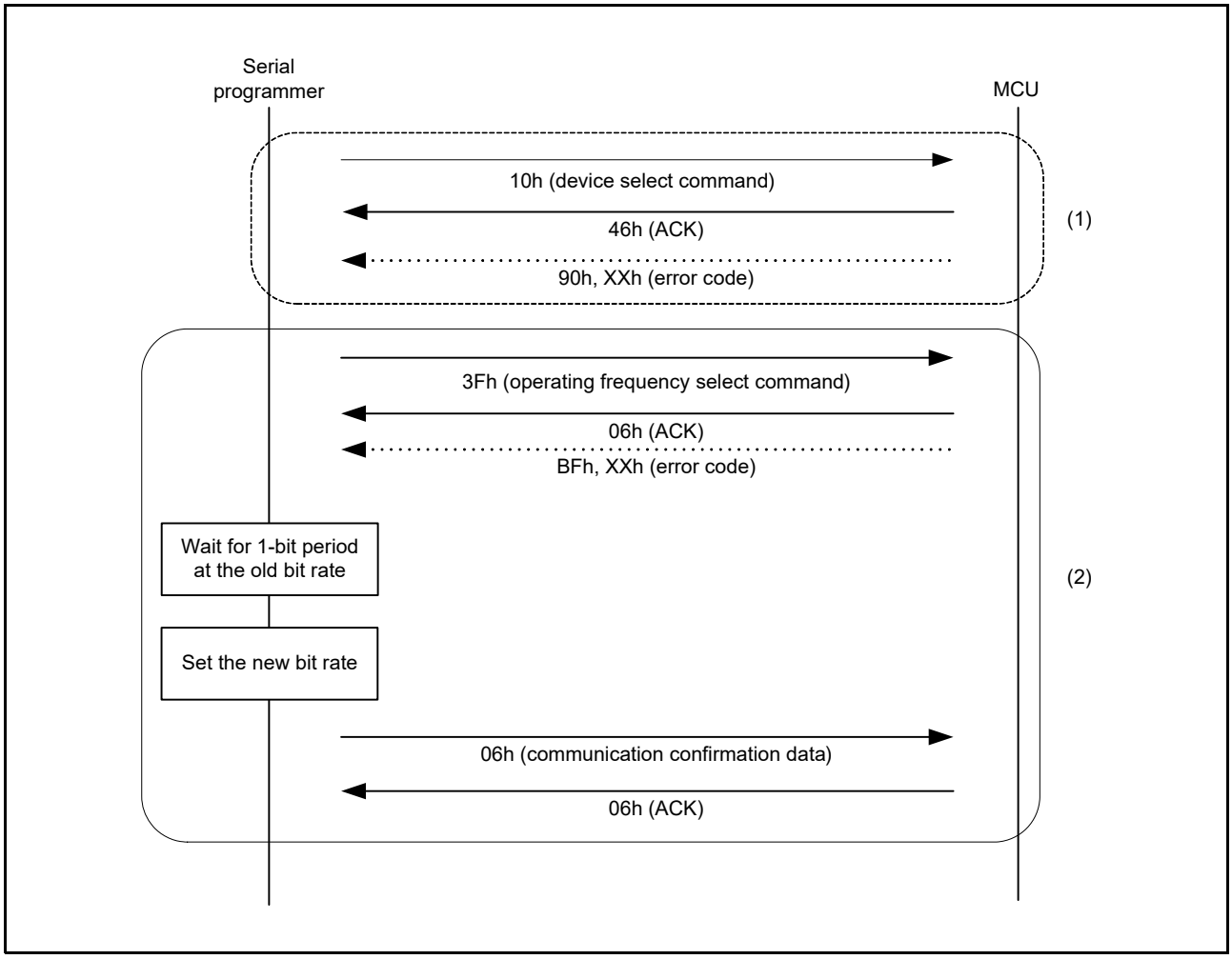

Figure 38.32 Procedure to Select the Device and Change the Bit Rate

38.11.4 Enter the Program/Erase Host Command Wait State

Send the program/erase host command wait state transition command to perform program/erase operations. The MCU sends a response according to whether boot mode ID code protection is enabled or disabled.

(1) When boot mode ID code protection is disabled, the MCU sends a response (06h), and enters the program/erase host command wait state. Use the serial programmer to start from the operation described in section 38.11.6, Erase the User Area and Data Area.

(2) When the boot mode ID code protection is enabled, the MCU sends a response (16h), and enters the ID code authentication wait state. Use the serial programmer to start from the operation described in section 38.11.5, Unlock Boot Mode ID Code Protection.

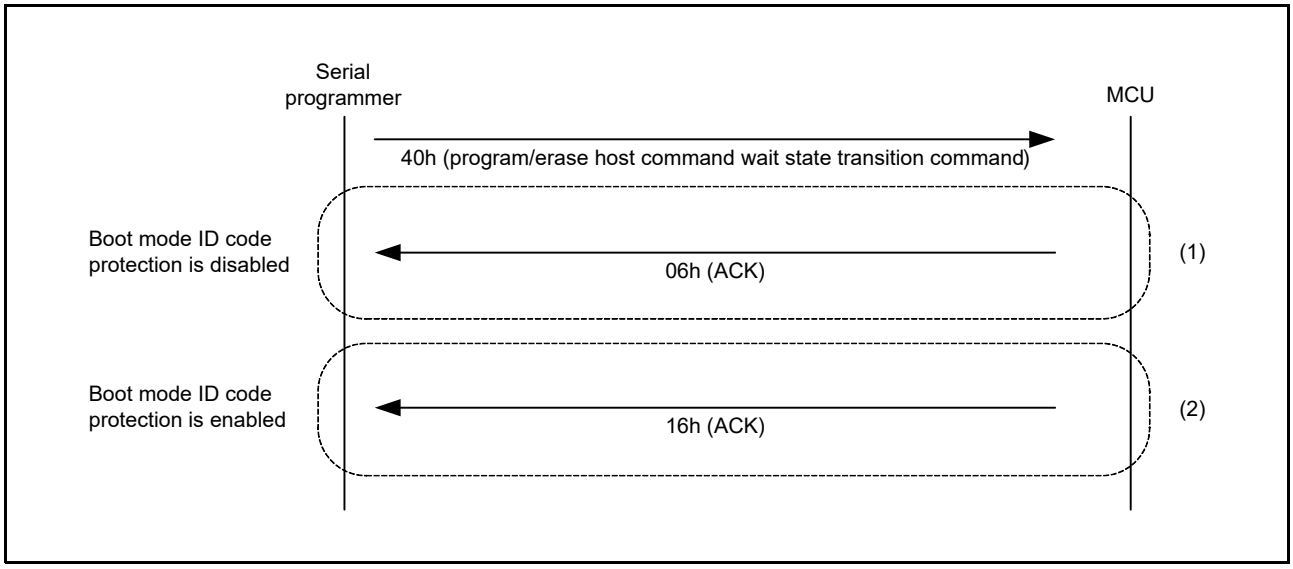

Figure 38.33 Procedure to Transition to the Program/Erase Host Command Wait State

38.11.5 Unlock Boot Mode ID Code Protection

Send the ID code check command to unlock boot mode ID code protection.

(1) When ID codes match, the MCU enters the program/erase host command wait state. Data in the user area and data area are not erased. Use the serial programmer to start from the operation described in section 38.11.6, Erase the User Area and Data Area.

(2) If ID codes do not match consecutively, the MCU remains in the boot mode ID code authentication state. Reset the MCU, and then use the serial programmer to start again from section 38.11.1, Bit Rate Automatic Adjustment.

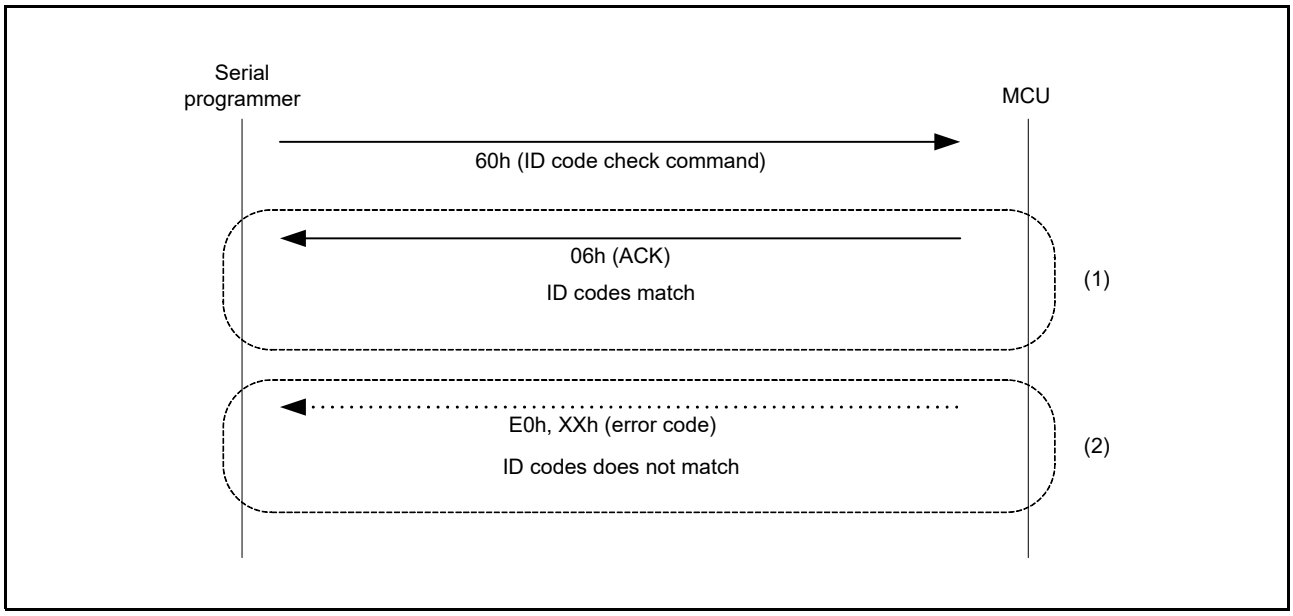

Figure 38.34 Procedure to Unlock ID Code Protection

38.11.6 Erase the User Area and Data Area

Procedure to erase blocks that are programmed in the user area and data area to program a user program and data is as follows.

(1) Send an erase preparation command (48h).
(2) Send a block erase command (59h).
(3) To place the MCU in the program/erase host command wait state, send a block erase command for ending the erasure (59h 04h FFh FFh FFh FFh A7h).

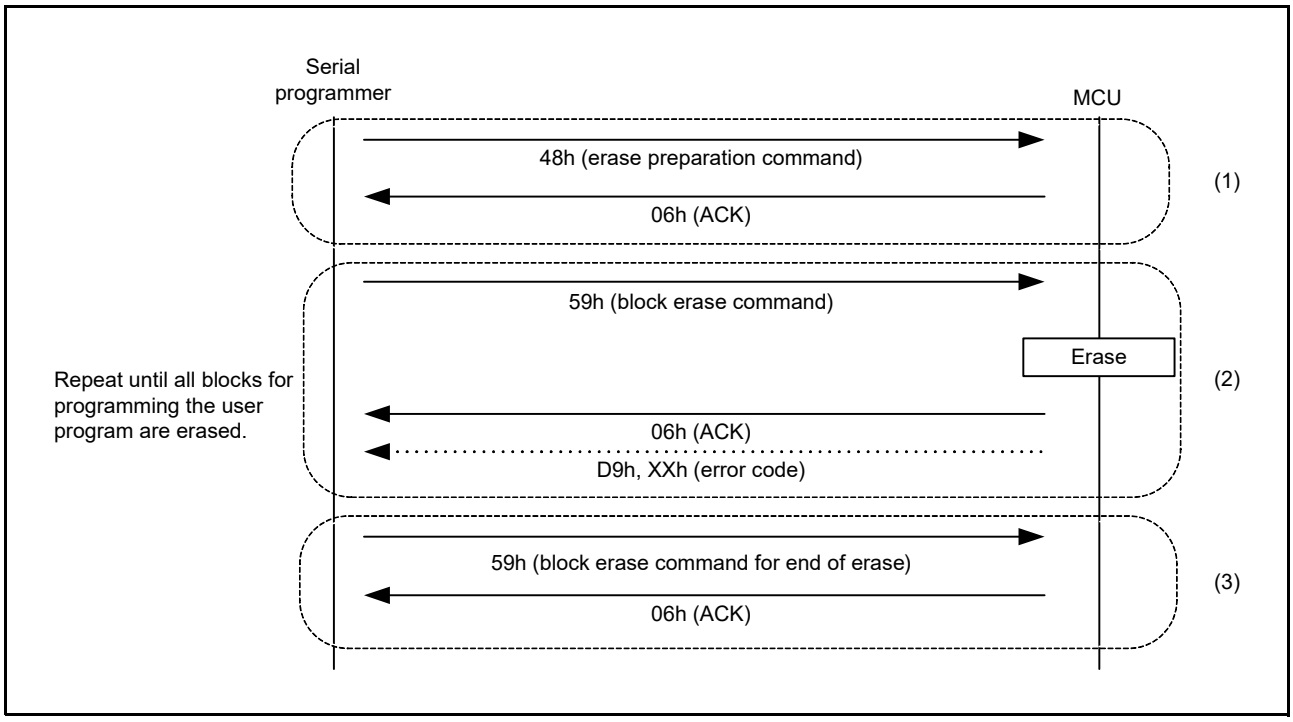

Figure 38.35 Procedure to Erase the User Area and Data Area

38.11.7 Program the User Area and Data Area

Procedure to program a user program and data in the user area and data area is as follows.

(1) Send the user/data area program preparation command (43h).
(2) Send the program command (50h) or the data area program command (51h).
(3) To place the MCU in the program/erase host command wait state, send the program command (50h FFh FFh FFh FFh B4h) or the data area program command (51h FFh FFh FFh FFh 00h B3h) for ending the programming.

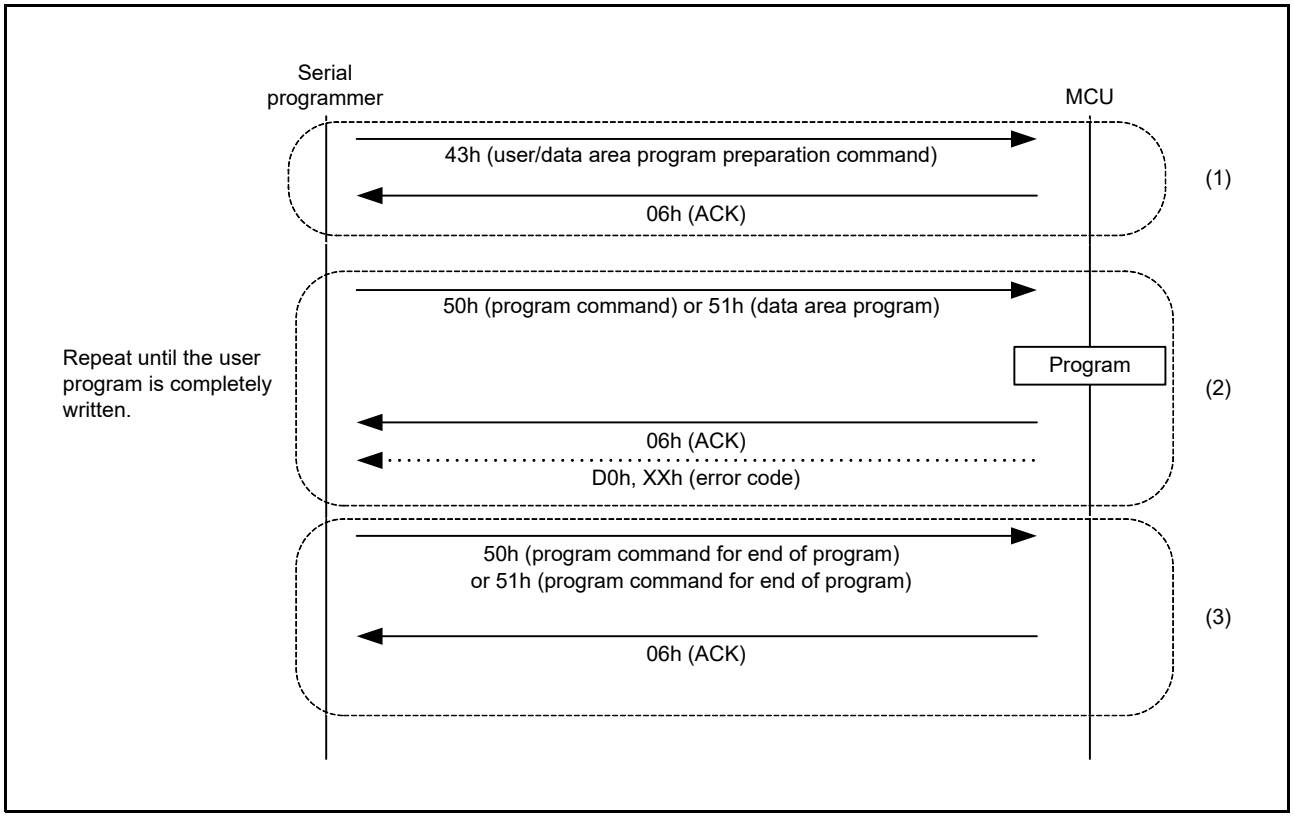

Figure 38.36 Procedure to Program the User Area and Data Area

38.11.8 Check Data in the User Area

Procedure to read and check, checksum, and blank check the user area to check the programmed data in the user area is as follows.

(1) The read and check operation is used to read data in the user area and compare the read data with the programmed data to check if the program operation is performed successfully. Send a memory read command (52h) to read data in the user area.
(2) Send the user area checksum command (4Bh) to check program data using the checksum of user area.
(3) Send a user area blank check command (4Dh) to check if the user area has data.

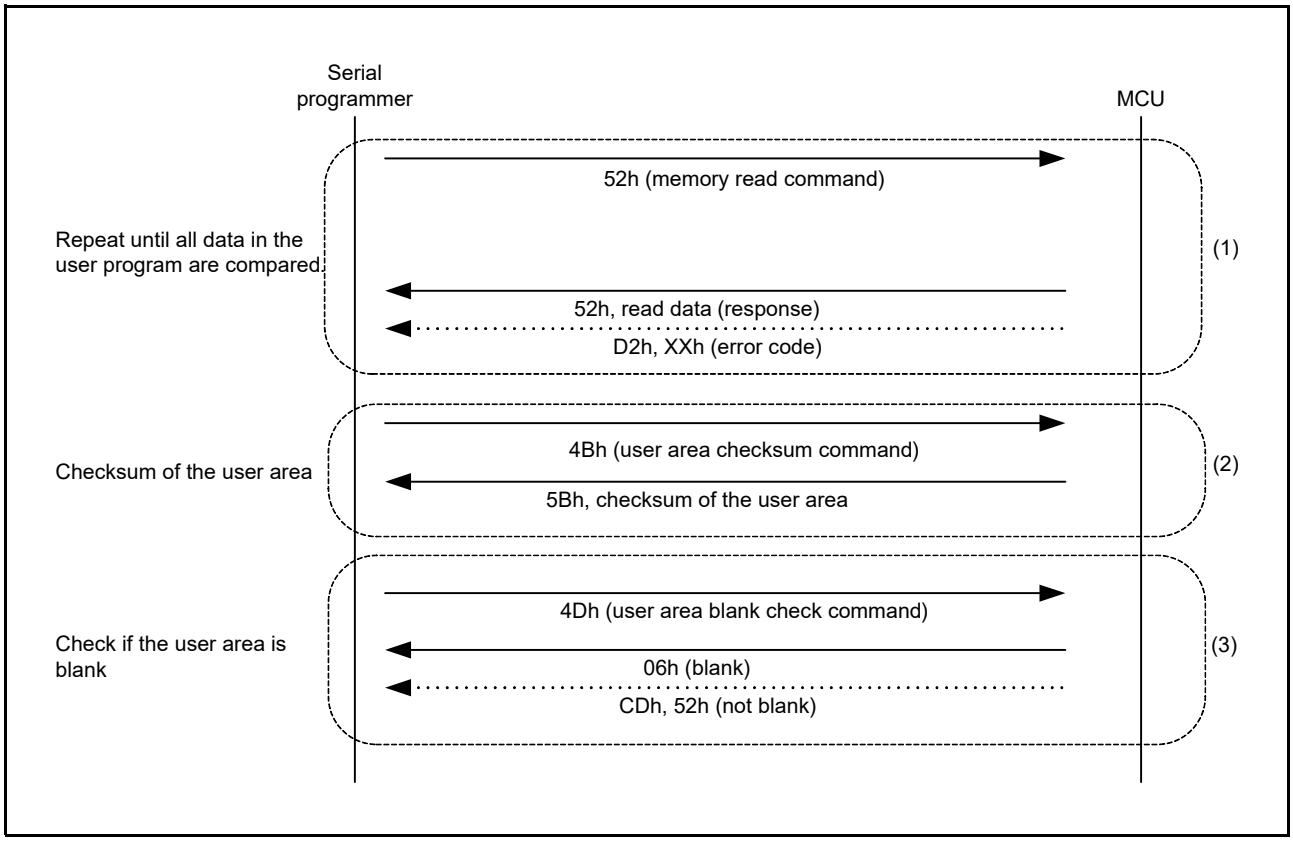

Figure 38.37 Procedure to Check Data in the User Area

38.11.9 Check Data in the Data Area

Procedure to read and check, checksum, and blank check the data area to check the programmed data in the data area is as follows.

(1) The read and check operation is used to read data in the data area and compare the read data with the programmed data to check if the program operation is performed successfully. Send a memory read command (52h) to read data in the data area.
(2) Send the data area checksum command (61h) to check program data using the checksum of data area.
(3) Send the data area blank check command (62h) to check if the data area has data.

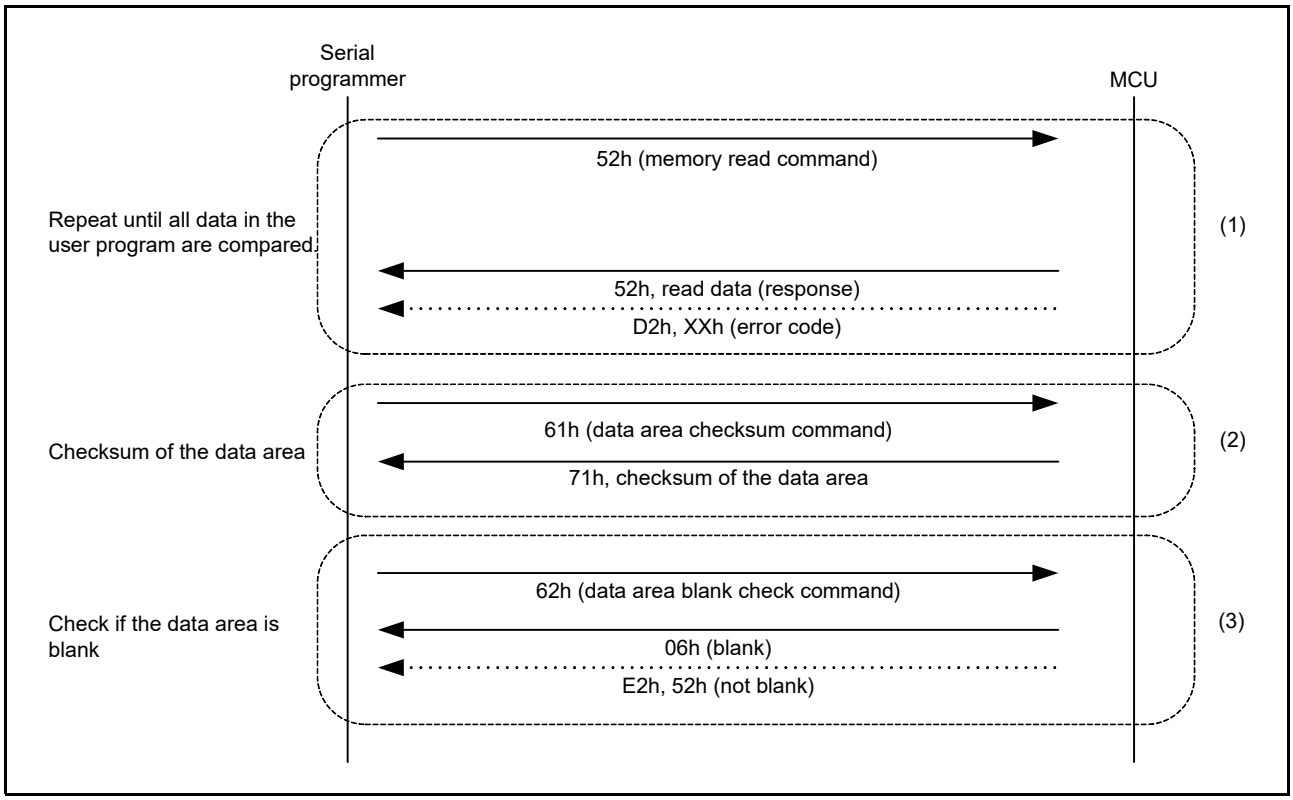

Figure 38.38 Procedure to Check Data in the Data Area

38.11.10 Set the Access Window in the User Area

Procedure to set the access window to avoid unintentionally rewriting the user area during the self-programming is as follows.

(1) Send the access window program command (74h) to set the access window settings.
(2) Send the access window read command (73h) to confirm the access window settings.

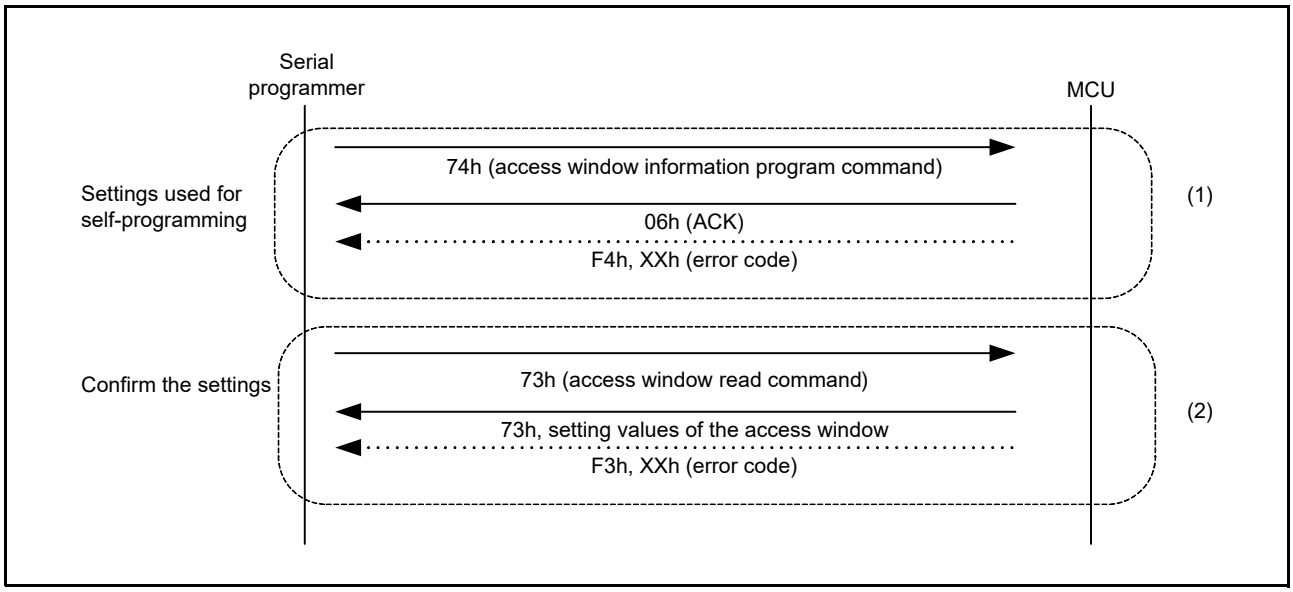

Figure 38.39 Procedure to Set the Access Window in the User Area

38.12 Rewriting by Self-Programming

38.12.1 Overview

The MCU supports rewriting of the flash memory by the user program. The ROM and E2 DataFlash can be rewritten by preparing a routine to rewrite the flash memory (flash rewrite routine) in the user program.
When rewriting the E2 DataFlash, the BGO can be used to execute the flash rewrite routine on the ROM. The E2 DataFlash can also be rewritten by executing the flash rewrite routine that is transferred on the RAM in advance.

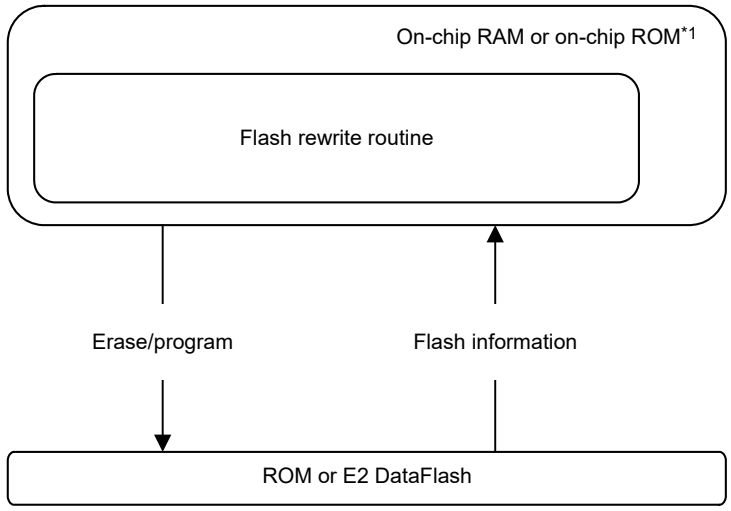

Note 1. The ROM cannot be rewritten by executing the flash rewrite routine on the ROM.

Figure 38.40 Self-Programming Overview

38.13 Usage Notes

(1) Access the Block Where Erase Operation is Forcibly Stopped
When forcibly stopping an erase operation, data in the block where the erase operation is aborted is undefined. To avoid malfunctions caused by reading undefined data, do not execute instructions or read data in the block where an erase operation is forcibly stopped.

(2) Processing After Forced Stop of Erase Operation
When an erase operation is forcibly stopped, issue a block erase command again to the same block.

(3) Additional Programming Disabled
The same address cannot be programmed more than once. When programming an area that has been already programmed, erase the area first.

(4) Reset during Program/Erase
If inputting a reset from the RES# pin, release the reset after reset input time of at least tRESW (refer to section 39, Electrical Characteristics) within the range of the operating voltage defined in the electrical characteristics.
The IWDT reset and software reset can be used regardless of tRESW.

(5) Location of Interrupt Vectors and Exception Vectors during Program/Erase Operation
When an interrupt or an exception occurs during a program/erase operation, the vector may be fetched from the ROM. To avoid fetching the vector from the ROM, allocate the interrupt vector table and exception vector table to the area other than the ROM with the INTB and EXTB registers in the CPU.

(6) Abnormal Termination during Program/Erase
When the voltage exceeds the range of the operating voltage during a program/erase operation or when a program/erase operation is not completed successfully due to a reset or prohibited actions described in (7), erase the area again.

(7) Actions Prohibited during Program/Erase
To prevent the damage to the flash memory, comply with the following instructions.
- Do not use the MCU power supply that is outside the operating voltage range.
- Do not update the value of the OPCCR.OPCM[2:0] bits.
- Do not change the clock source select bit in the SCKCR3 register.
- Do not change the division ratio of the flash interface clock (FCLK).
- Do not place the MCU in deep sleep mode or software standby mode.
- Do not access the E2 DataFlash during a program/erase operation to the ROM.
- Do not change the DFLCTL.DFLEN bit value during a program/erase operation to the E2 DataFlash.

(8) FCLK during Program/Erase
For programming/erasure by self-programming, set the frequency of the FlashIF clock (FCLK), and specify an integer FCLK frequency (MHz) in FISR.PCKA[4:0] bits. Note that when the FCLK is 4 to 32 MHz, a rounded-up value should be set for a non-integer frequency such as 12.5 MHz (i.e. 12.5 MHz should be set rounded up to 13 MHz). If the FCLK is equal to or less than 4 MHz, only 1, 2, 3, or 4 MHz can be used.

38.14 Usage Notes in Boot Mode

(1) Notes on Communication Errors in Boot Mode
When communication with the MCU cannot be performed properly, reset and start up in boot mode again.

(2) Notes on Power Supply Voltage in Boot Mode (SCI Interface)
When the bit rate exceeds 500 kbps in boot mode (SCI Interface), use a voltage that is 3.0 V or higher.

(3) Notes on Option-Setting Memory in Boot Mode
The settings of option function select register 0 (OFS0), option function select register 1 (OFS1), and endian select register (MDE) are disabled in boot mode.

(4) Notes on Switching the Start-Up Area
Switch the start-up area by self-programming.

39. Electrical Characteristics

39.1 Absolute Maximum Ratings

Table 39.1 Absolute Maximum Ratings

Conditions: VSS = AVSS0 = VREFL0 = 0 V

Item		Symbol	Value	Unit
Power supply voltage		VCC	–0.3 to +6.5	V
Input voltage	P16 and P17 (5-V tolerant)	V_{in}	–0.3 to +6.5	V
	Ports other than above		–0.3 to VCC + 0.3	
Reference power supply voltage		VREFH0	–0.3 to AVCC0 + 0.3	V
Analog power supply voltage		AVCC0	–0.3 to +6.5	V
Analog input voltage		V_{AN}	–0.3 to AVCC0 + 0.3	V
Reference voltage for 24-bit delta-sigma A/D converter		REF0P, REF1P	–0.3 to AVCC0 + 0.3	V
		REF0N, REF1N	–0.3 to AVCC0 + 0.3	
Junction temperature	D version	T_j	–40 to +105	°C
	G version		–40 to +112	
Storage temperature		T_{stg}	–55 to +125	°C

Caution: Exceeding absolute maximum ratings may permanently damage the MCU.
To preclude malfunctions due to noise interference, insert capacitors with high frequency characteristics between the VCC and VSS pins, between the AVCC0 and AVSS0 pins, and between the VREFH0 and VREFL0 pins. Place capacitors with values of about 0.1 μF as close as possible to every power supply pin and use the shortest and widest possible traces.
Connect the VCL pin to a VSS pin via a 4.7-μF capacitor. The capacitor must be placed close to the pin. For details, refer to section 39.12.1, Connecting VCL Capacitor and Bypass Capacitors.
Do not input signals to ports other than 5-V tolerant ports while power is not being supplied to the MCU.
The current injection that results from the input of such a signal may lead to malfunctions and the abnormal current that passes through the MCU at such times may cause degradation of internal elements.
However, even if –0.3 to +6.5 V is input to a 5-V tolerant port, this will not cause problems such as damage to the MCU.

39.2 Recommended Operating Conditions

Table 39.2 Recommended Operating Conditions (1)

Item		Symbol	Min.	Typ.	Max.	Unit
Power supply voltages		VCC*1, *2	1.8	—	5.5	V
		VSS	—	0	—	
Analog power supply voltages		AVCC0*1, *2	1.8	—	5.5	V
		AVSS0	—	0	—	
		VREFH0	1.8	—	AVCC0	
		VREFL0	—	0	—	
Input voltage	Ports for 5 V tolerant: P16, P17	V_{in}	–0.3	—	5.8	V
	AIN0 to AIN11, REF0N, REF0P, REF1N, REF1P		–0.3	—	AVCC0 + 0.3	
	Ports other than above		–0.3	—	VCC + 0.3	
Operating temperature	D version	T_{opr}	–40	—	85	°C
	G version		–40	—	105	

Note 1. Use AVCC0 and VCC under the following conditions:
While VCC > 2.4 V: AVCC0 and VCC can be set independently when AVCC0 ≥ 2.4 V
While VCC ≤ 2.4 V: AVCC0 and VCC can be set independently when AVCC0 ≥ VCC

Note 2. When powering on the VCC and AVCC0 pins, power them on at the same time or the VCC pin first and then the AVCC0 pin.

Table 39.3 Recommended Operating Conditions (2)

Item	Symbol	Value
VCL pin external capacitance	C_{VCL}	4.7 μF ± 30%*1

Note 1. Use a multilayer ceramic capacitor with a nominal capacitance of 4.7 μF, for which the sum of the capacitance tolerance and change in the capacitance under the usage conditions will be no greater than ±30%.

39.3 DC Characteristics

Table 39.4 DC Characteristics (1)

Conditions: 2.7 V ≤ VCC ≤ 5.5 V, 2.7 V ≤ AVCC0 ≤ 5.5 V, VSS = AVSS0 = 0 V, T_a = –40 to +105°C

Item		Symbol	Min.	Typ.	Max.	Unit	Test Conditions
Schmitt trigger input voltage	RIIC input pin (except for SMBus, 5-V tolerant)	V_{IH}	0.7 × VCC	—	5.8	V	
	P16 and P17 (5-V tolerant)		0.8 × VCC	—	5.8		
	P14, P15, P26, P27, P30, P31, P35 to P37, PB0, PB1, PC4 to PC7, PH0 to PH3, and RES#		0.8 × VCC	—	VCC + 0.3		
	RIIC input pin (except for SMBus)	V_{IL}	–0.3	—	0.3 × VCC		
	Other than RIIC input pin		–0.3	—	0.2 × VCC		
Hysteresis of Schmitt trigger input	RIIC input pin (except for SMBus)	ΔV_T	0.05 × VCC	—	—		
	P16 and P17		0.05 × VCC	—	—		
	Other than RIIC input pin		0.1 × VCC	—	—		
High-level input voltage (except for Schmitt trigger input pins)	MD	V_{IH}	0.9 × VCC	—	VCC + 0.3	V	
	EXTAL (external clock input)		0.8 × VCC	—	VCC + 0.3		
	RIIC input pin (SMBus)		2.1	—	VCC + 0.3		
Low-level input voltage (except for Schmitt trigger input pins)	MD	V_{IL}	–0.3	—	0.1 × VCC		
	EXTAL (external clock input)		–0.3	—	0.2 × VCC		
	RIIC input pin (SMBus)		–0.3	—	0.8		

Table 39.5 DC Characteristics (2)

Conditions: 1.8 V ≤ VCC < 2.7 V, 1.8 V ≤ AVCC0 < 2.7 V, VSS = AVSS0 = 0 V, T_a = –40 to +105°C

Item		Symbol	Min.	Typ.	Max.	Unit	Test Conditions
Schmitt trigger input voltage	P16 and P17 (5-V tolerant)	V_{IH}	0.8 × VCC	—	5.8	V	
	P14, P15, P26, P27, P30, P31, P35 to P37, PB0, PB1, PC4 to PC7, PH0 to PH3, and RES#		0.8 × VCC	—	VCC + 0.3		
	P14 to P17, P26, P27, P30, P31, P35 to P37, PB0, PB1, PC4 to PC7, PH0 to PH3, and RES#	V_{IL}	–0.3	—	0.2 × VCC		
Hysteresis of Schmitt trigger input	P14 to P17, P26, P27, P30, P31, P35 to P37, PB0, PB1, PC4 to PC7, PH0 to PH3, and RES#	ΔV_T	0.01 × VCC	—	—		
High-level input voltage (except for Schmitt trigger input pins)	MD	V_{IH}	0.9 × VCC	—	VCC + 0.3	V	
	EXTAL (external clock input)		0.8 × VCC	—	VCC + 0.3		
Low-level input voltage (except for Schmitt trigger input pins)	MD	V_{IL}	–0.3	—	0.1 × VCC		
	EXTAL (external clock input)		–0.3	—	0.2 × VCC		

Table 39.6 DC Characteristics (3)

Conditions: 1.8 V ≤ VCC = AVCC0 ≤ 5.5 V, VSS = AVSS0 = 0 V, T_a = –40 to +105°C

Item		Symbol	Min.	Typ.	Max.	Unit	Test Conditions
Input leakage current	RES#, MD, and P35	$\|I_{in}\|$	—	—	1.0	μA	V_{in} = 0 V, VCC
Three-state leakage current (off-state)	P16 and P17	$\|I_{TSI}\|$	—	—	1.0	μA	V_{in} = 0 V, 5.8V
	Ports other than P16 and P17		—	—	0.2		V_{in} = 0 V, VCC
Input capacitance	P14 to P17, P26, P27, P30, P31, P36, P37, PB0, PB1, PC4 to PC7, PH0 to PH3, MD, and RES#	C_{in}	—	—	15	pF	V_{in} = 20 mV, f = 1 MHz, T_a = 25°C
	P35		—	—	30		
Output voltage of the VCL pin		V_{CL}	—	2.12	—	V	

Table 39.7 DC Characteristics (4)

Conditions: 1.8 V ≤ VCC = AVCC0 ≤ 5.5 V, VSS = AVSS0 = 0 V, T_a = –40 to +105°C

Item		Symbol	Min.	Typ.	Max.	Unit	Test Conditions
Input pull-up resistor	All ports (except for P35)	R_U	10	20	50	kΩ	V_{in} = 0 V

Table 39.8 DC Characteristics (5)

Conditions: 1.8 V ≤ VCC = AVCC0 ≤ 5.5 V, VSS = AVSS0 = 0 V, T_a = –40 to +105°C

Item					Symbol	Typ. *4	Max.	Unit	Test Conditions
Supply current *1	High-speed operating mode	Normal operating mode	No peripheral modules are operating.*2	ICLK = 32 MHz	I_{CC}	4.1	—	mA	
				ICLK = 16 MHz		2.9	—		
				ICLK = 8 MHz		2.2	—		
				ICLK = 4 MHz		1.9	—		
			All peripheral modules are in normal operation.	ICLK = 32 MHz*3		16.3	—		
				ICLK = 16 MHz*3		9.1	—		
				ICLK = 8 MHz*3		5.5	—		
				ICLK = 4 MHz*3		3.7	—		
			All peripheral modules are in full operation.	ICLK = 32 MHz*3		—	30.3		
		Sleep mode	No peripheral modules are operating.*2	ICLK = 32 MHz		2.4	—		
				ICLK = 16 MHz		1.9	—		
				ICLK = 8 MHz		1.6	—		
				ICLK = 4 MHz		1.5	—		
			All peripheral modules are in normal operation.	ICLK = 32 MHz*3		8.9	—		
				ICLK = 16 MHz*3		5.4	—		
				ICLK = 8 MHz*3		3.5	—		
				ICLK = 4 MHz*3		2.5	—		
		Deep sleep mode	No peripheral modules are operating.*2	ICLK = 32 MHz		1.5	—		
				ICLK = 16 MHz		1.3	—		
				ICLK = 8 MHz		1.2	—		
				ICLK = 4 MHz		1.2	—		
			All peripheral modules are in normal operation.	ICLK = 32 MHz*3		7.2	—		
				ICLK = 16 MHz*3		4.4	—		
				ICLK = 8 MHz*3		2.8	—		
				ICLK = 4 MHz*3		2.1	—		
		Increase during BGO operation*5				2.5	—		

Item					Symbol	Typ. *4	Max.	Unit	Test Conditions
Supply current *1	Middle-speed operating mode	Normal operating mode	No peripheral modules are operating.*6	ICLK = 12 MHz	I_{CC}	2.1	—	mA	
				ICLK = 8 MHz		1.7	—		
				ICLK = 4 MHz		1.4	—		
				ICLK = 1 MHz		1.1	—		
			All peripheral modules are in normal operation.*7	ICLK = 12 MHz		6.8	—		
				ICLK = 8 MHz		5.0	—		
				ICLK = 4 MHz		3.1	—		
				ICLK = 1 MHz		1.6	—		
			All peripheral modules are in full operation.*7	ICLK = 12 MHz		—	13.5		
		Sleep mode	No peripheral modules are operating.*6	ICLK = 12 MHz		1.4	—		
				ICLK = 8 MHz		1.2	—		
				ICLK = 4 MHz		1.1	—		
				ICLK = 1 MHz		1.0	—		
			All peripheral modules are in normal operation.*7	ICLK = 12 MHz		4.0	—		
				ICLK = 8 MHz		3.0	—		
				ICLK = 4 MHz		2.1	—		
				ICLK = 1 MHz		1.3	—		
		Deep sleep mode	No peripheral modules are operating.*6	ICLK = 12 MHz		1.0	—		
				ICLK = 8 MHz		0.9	—		
				ICLK = 4 MHz		0.9	—		
				ICLK = 1 MHz		0.8	—		
			All peripheral modules are in normal operation.*7	ICLK = 12 MHz		3.3	—		
				ICLK = 8 MHz		2.6	—		
				ICLK = 4 MHz		1.8	—		
				ICLK = 1 MHz		1.2	—		
		Increase during BGO operation*5				2.5	—		

Note 1. Supply current values do not include the output charge/discharge current from all pins. The values apply when internal pull-up resistors are disabled.

Note 2. Peripheral module clocks are stopped. This does not include BGO operation. The clock source is PLL. FCLK and PCLK are set to divided by 64.

Note 3. Peripheral module clocks are supplied. This does not include BGO operation. The clock source is PLL. FCLK and PCLK are the same frequency as that of ICLK.

Note 4. Conditions for typical values are at VCC = 3.3 V and T_a = 25°C.

Note 5. The increase is caused by program/erase operation to the ROM or E2 DataFlash during the execution of a user program.

Note 6. Peripheral module clocks are stopped. The clock source is PLL when ICLK is 12 MHz and HOCO for other cases. FCLK and PCLK are set to divided by 64.

Note 7. Peripheral module clocks are supplied. The clock source is PLL when ICLK is 12 MHz and HOCO for other cases. FCLK and PCLK are the same frequency of that of the ICLK.

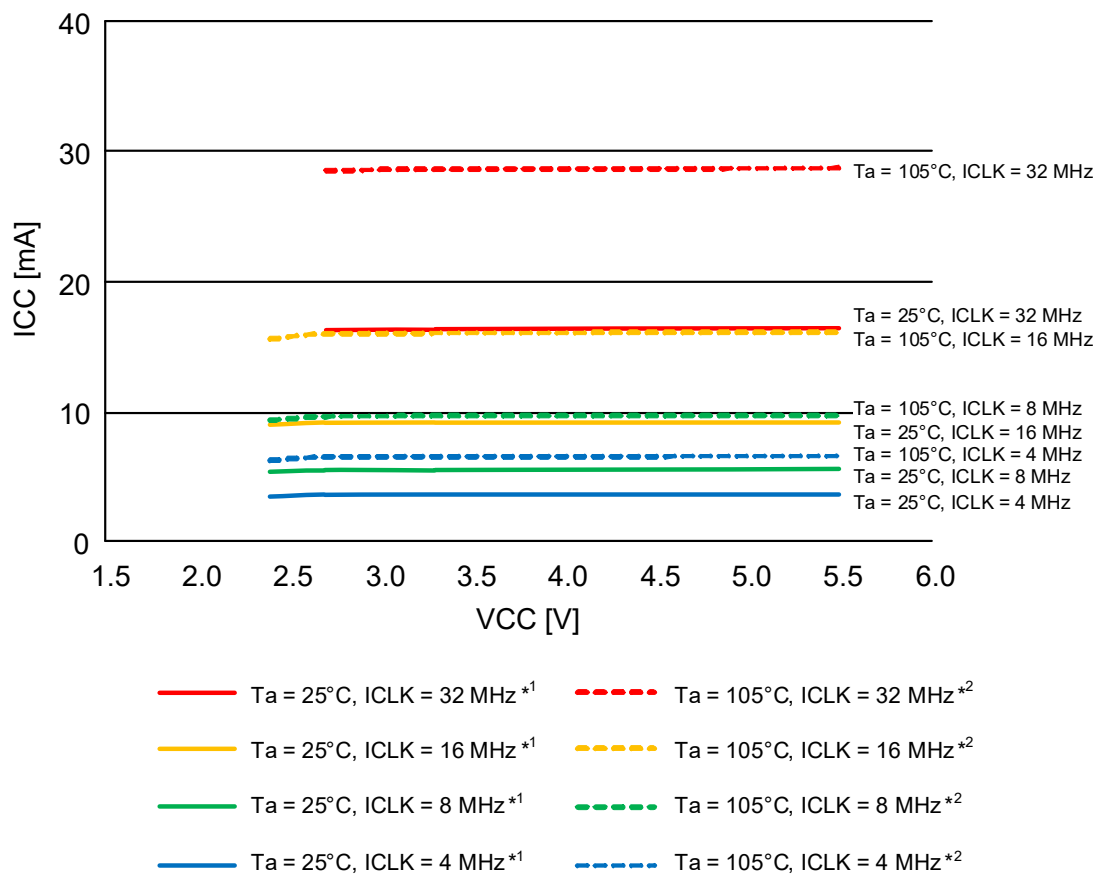

Note 1. This result applies when all peripheral modules are in normal operation but BGO is not in use. Indicates the average of the typical samples through actual measurement during product evaluation.

Note 2. This result applies when all peripheral modules are in full operation but BGO is not in use. Indicates the average of the upper-limit samples through actual measurement during product evaluation.

Figure 39.1 Voltage Dependence in High-Speed Operating Mode (Reference Data)

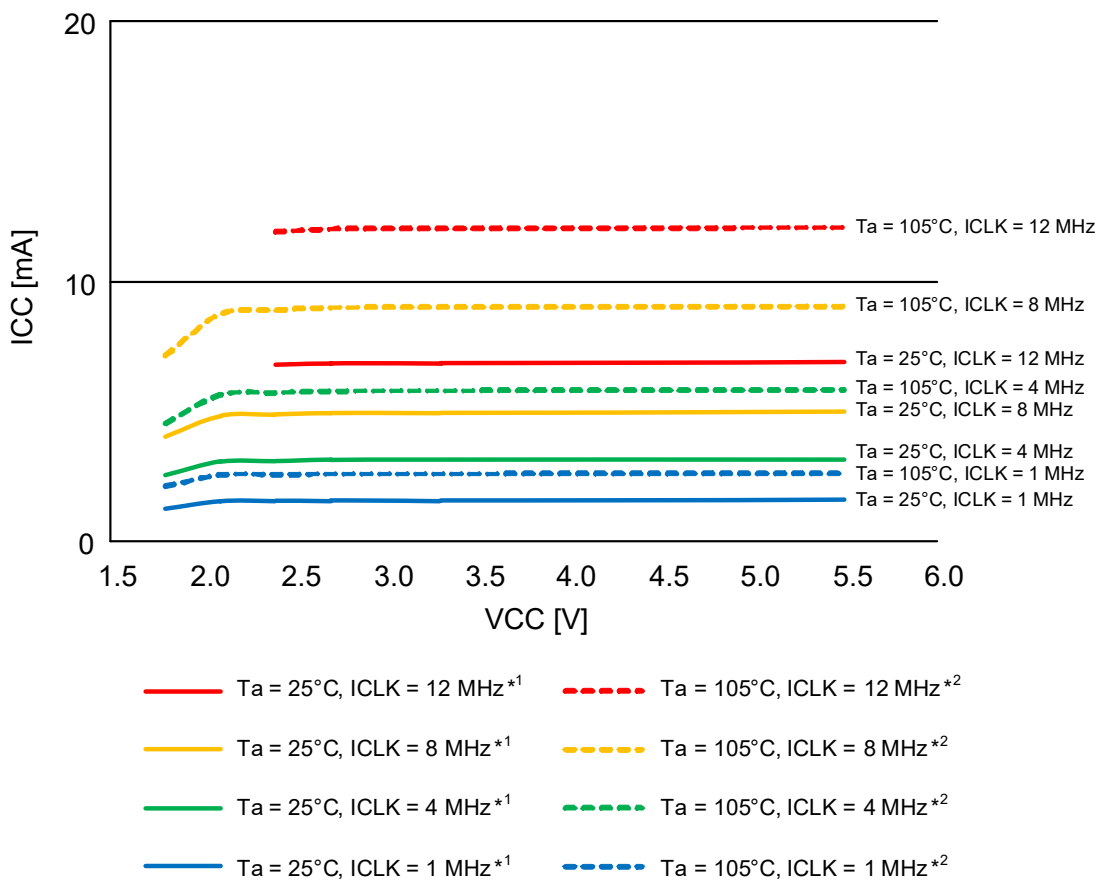

Note 1. This result applies when all peripheral modules are in normal operation but BGO is not in use. Indicates the average of the typical samples through actual measurement during product evaluation.

Note 2. This result applies when all peripheral modules are in full operation but BGO is not in use. Indicates the average of the upper-limit samples through actual measurement during product evaluation.

Figure 39.2 Voltage Dependence in Middle-Speed Operating Mode (Reference Data)

Table 39.9 DC Characteristics (6)

Conditions: 1.8 V ≤ VCC = AVCC0 ≤ 5.5 V, VSS = AVSS0 = 0 V, T_a = –40 to +105°C

Item			Symbol	Typ.*3	Max.	Unit	Test Conditions
Supply current*1	Software standby mode*2	T_a = 25°C	I_{CC}	0.4	2.6	μA	
		T_a = 55°C		0.8	3.0		
		T_a = 85°C		2.5	12.6		
		T_a = 105°C		6.3	31.2		
	Increment for IWDT operation			0.4	—		
	Increment for LPT operation			0.4	—		Use IWDT-Dedicated On-Chip Oscillator for clock source

Note 1. Supply current values were obtained with no load on any output pin and all internal pull-up resistors disabled.
Note 2. The IWDT and LVD are stopped.
Note 3. Conditions for typical values are at VCC = 3.3 V.

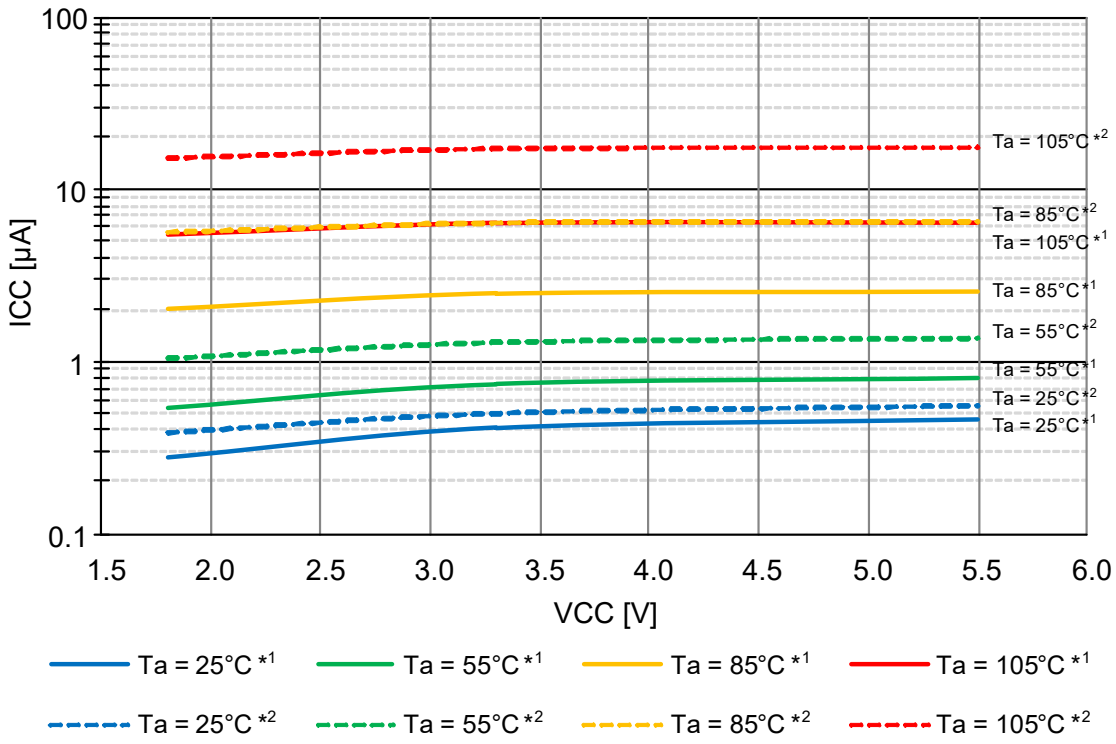

Note 1. Indicates the average of the typical samples through actual measurement during product evaluation.
Note 2. Indicates the average of the upper-limit samples through actual measurement during product evaluation.

Figure 39.3 Voltage Dependence in Software Standby Mode (Reference Data)

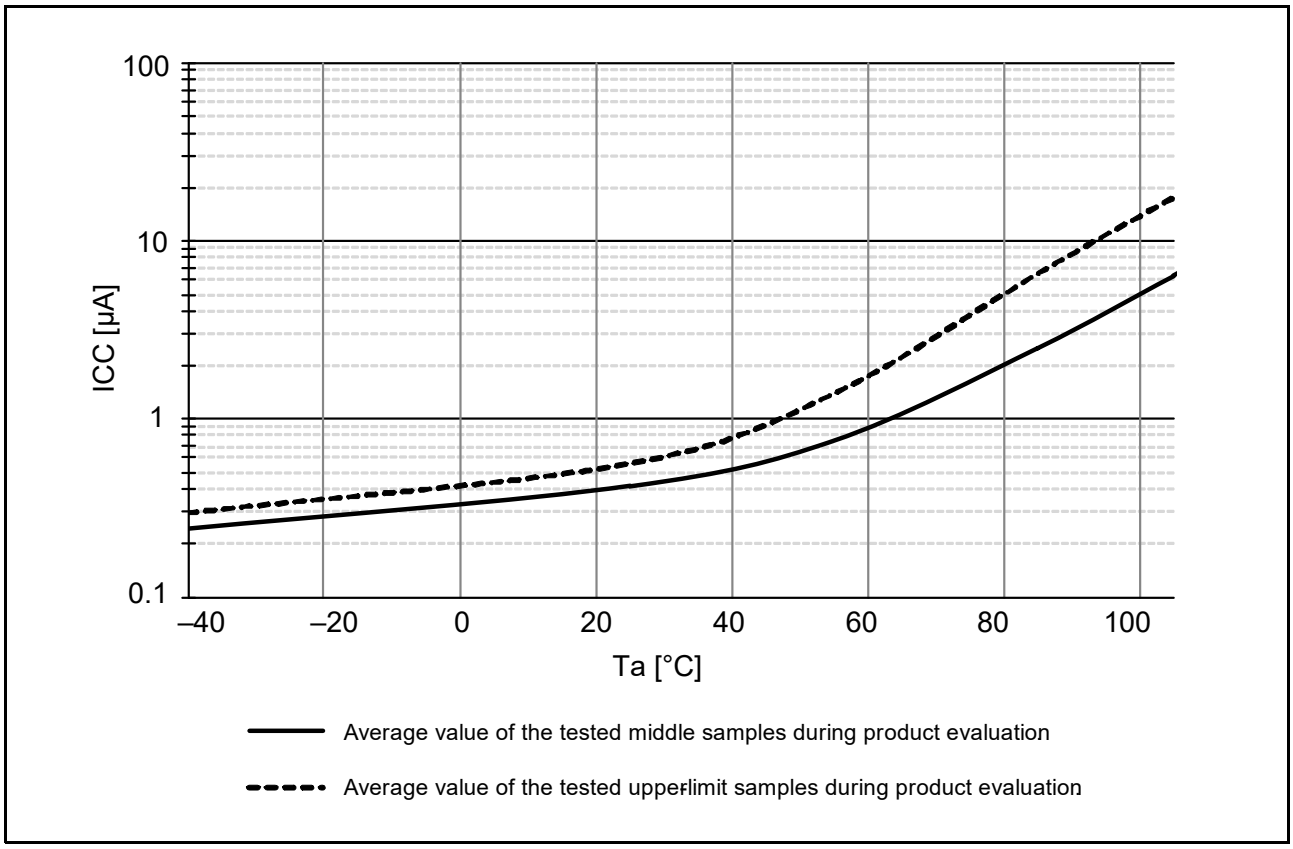

Figure 39.4 Temperature Dependence in Software Standby Mode (Reference Data)

Table 39.10 DC Characteristics (7)

Conditions: 1.8 V ≤ VCC = AVCC0 ≤ 5.5 V, VSS = AVSS0 = 0 V, T_a = –40 to +105°C

Item		Symbol	Min.	Typ.*1	Max.	Unit	Test Conditions
LVD	LVD0	I_{LVD}	—	0.10	—	μA	
	LVD1		—	0.10	—		
	LVD2		—	0.20	—		

Note 1. Conditions for typical values are at VCC = AVCC0 = 3.3 V and T_a = 25°C.

Table 39.11 DC Characteristics (8)

Conditions: 1.8 V ≤ VCC = AVCC0 ≤ 5.5 V, VSS = AVSS0 = 0 V, T_a = –40 to +105°C

Item	Symbol	Min.	Typ.	Max.	Unit	Test Conditions
RAM standby voltage	V_{RAM}	1.8	—	—	V	

Table 39.12 DC Characteristics (9)

Conditions: 0 V ≤ VCC = AVCC0 ≤ 5.5 V, VSS = AVSS0 = 0 V, T_a = –40 to +105°C

Item		Symbol	Min.	Typ.	Max.	Unit	Test Conditions
VCC ramp-up rate at power-on	At normal startup*1	SrVCC	0.02	—	20.00	ms/V	
	During fast startup time*2		0.02	—	2.00		
	Voltage monitoring 0 reset enabled at startup*3, *4		0.02	—	—		

Note 1. When the OFS1.LVDAS and OFS1.FASTSTUP bits are 1
Note 2. When the OFS1.LVDAS bit is 1 and the OFS1.FASTSTUP bit is 0
Note 3. When the OFS1.LVDAS bit is 0
Note 4. Turn on the power supply voltage according to the normal startup rising gradient because the settings in the OFS1 register are not read in boot mode.

Table 39.13 DC Characteristics (10)

Conditions: 1.8 V ≤ VCC = AVCC0 ≤ 5.5 V, VSS = AVSS0 = 0 V, T_a = –40 to +105°C

The result of any ripple must be within the limit on allowable ripple frequency $f_{r\ (VCC)}$ where the ripple voltage is within the range between the VCC upper limit and lower limit. The result of any ripple must be within the limit on the allowable VCC ramp rate in power fluctuation (dt/dVCC) where the change in VCC exceeds VCC ±10%.

Item	Symbol	Min.	Typ.	Max.	Unit	Test Conditions
Allowable ripple frequency	$f_{r\ (VCC)}$	—	—	10	kHz	Figure 39.5 $V_{r\ (VCC)}$ ≤ 0.2 × VCC
		—	—	1	MHz	Figure 39.5 $V_{r\ (VCC)}$ ≤ 0.08 × VCC
		—	—	10	MHz	Figure 39.5 $V_{r\ (VCC)}$ ≤ 0.06 × VCC
Allowable VCC ramp rate at power fluctuation	dt/dVCC	1.0	—	—	ms/V	When VCC change exceeds VCC ±10%

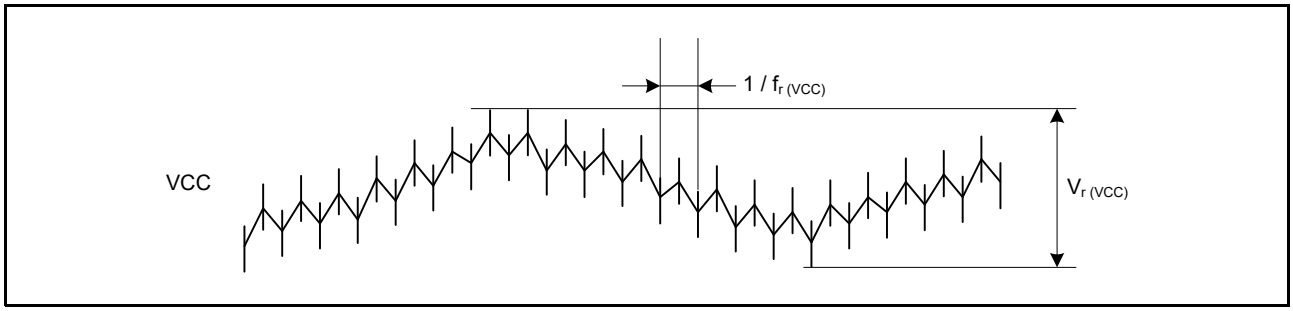

Figure 39.5 Ripple Waveform

Table 39.14 DC Characteristics (11)

Conditions: 1.8 V ≤ VCC ≤ 5.5 V, 2.7 V ≤ AVCC0 ≤ 5.5 V, VSS = AVSS0 = 0 V, T_a = –40 to +105°C

Item		Symbol	Min.	Typ.	Max.	Unit	Test Conditions
Operating current of 24-bit delta-sigma A/D converter (normal mode)	Gain = 1 (PGA disabled, BUF disabled) OPCR.DSADLVM bit = 0	I_{AVCC0} (DSAD)	—	500*1	660	μA	Figure 39.6, Figure 39.7 1 unit, external reference in use, reference buffer disabled, AVCC0 = 3.6 to 5.5 V
	Gain = 1 to 16 (PGA enabled) OPCR.DSADLVM bit = 0		—	840*1	1130		
	Gain = 32 to 128 OPCR.DSADLVM bit = 0		—	1050*1	1360		
	Gain = 1 (PGA disabled, BUF disabled) OPCR.DSADLVM bit = 1		—	490*2	850		Figure 39.8, Figure 39.9 1 unit, external reference in use, reference buffer disabled, AVCC0 = 2.7 to 5.5 V
	Gain = 1 to 16 (PGA enabled) OPCR.DSADLVM bit = 1		—	820*2	1320		
	Gain = 32 to 128 OPCR.DSADLVM bit = 1		—	1040*2	1560		
Operating current of 24-bit delta-sigma A/D converter (low power mode)	Gain = 1 (PGA disabled, BUF disabled) OPCR.DSADLVM bit = 0		—	250*1	280	μA	Figure 39.10, Figure 39.11 1 unit, external reference in use, reference buffer disabled, AVCC0 = 3.6 to 5.5 V
	Gain = 1 to 16 (PGA enabled) OPCR.DSADLVM bit = 0		—	390*1	480		
	Gain = 32 to 128 OPCR.DSADLVM bit = 0		—	430*1	520		
	Gain = 1 (PGA disabled, BUF disabled) OPCR.DSADLVM bit = 1		—	240*2	350		Figure 39.12, Figure 39.13 1 unit, external reference in use, reference buffer disabled, AVCC0 = 2.7 to 5.5 V
	Gain = 1 to 16 (PGA enabled) OPCR.DSADLVM bit = 1		—	380*2	550		
	Gain = 32 to 128 OPCR.DSADLVM bit = 1		—	420*2	590		
Operating current of voltage reference		I_{AVCC0} (VREF)	—	45	75	μA	Figure 39.18
Operating current of temperature sensor		I_{AVCC0} (TEMPS)	—	15	40	μA	Figure 39.19
Operating current of bias voltage generator		I_{AVCC0} (VBIAS)	—	15	25	μA	Figure 39.20
Operating current of excitation current source		I_{AVCC0} (IEXC)	—	55	70	μA	Figure 39.21
Operating current of analog input buffer	Normal mode	I_{AVCC0} (BUF)	—	85	130	μA	Figure 39.14, 1 unit
	Low power mode		—	25	40		Figure 39.15, 1 unit
Operating current of reference buffer	Normal mode	I_{AVCC0} (REFBUF)	—	85	130	μA	Figure 39.16, 1 unit
	Low power mode		—	25	40		Figure 39.17, 1 unit
Operating current of voltage detector	Low voltage detector for power supply	I_{AVCC0} (LVDET)	—	5	9	μA	1 unit
	Excitation current source disconnect detector	I_{AVCC0} (IEXCDET)	—	1	2		
	DSAD input voltage fault detector	I_{AVCC0} (DSIDET)	—	5	7		
	DSAD reference voltage fault detector	I_{AVCC0} (DSRDET)	—	10	15		

Note 1. Conditions for this value is at AVCC0 = 5.0 V and T_a = 25°C.
Note 2. Conditions for this value is at AVCC0 = 3.3 V and T_a = 25°C.

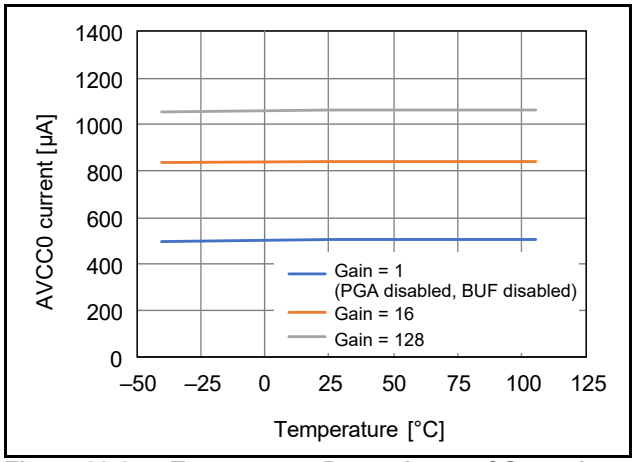

Figure 39.6 Temperature Dependence of Operating Current of 24-Bit Delta-Sigma A/D Converter (AVCC0 = 5.0 V, Normal Mode, OPCR.DSADLVM bit = 0)

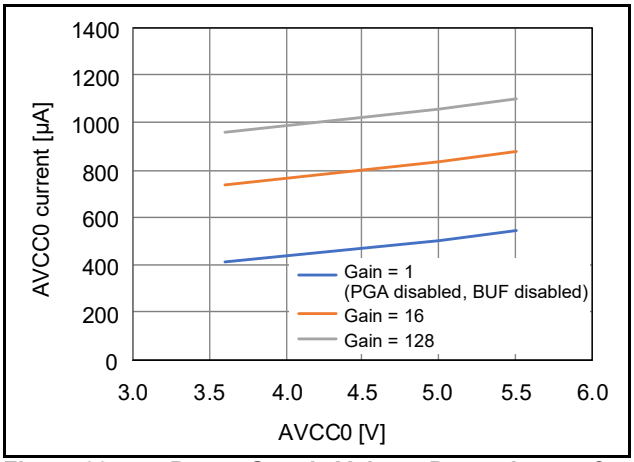

Figure 39.7 Power-Supply Voltage Dependence of Operating Current of 24-Bit Delta-Sigma A/D Converter (T_a = 25°C, Normal Mode, OPCR.DSADLVM bit = 0)

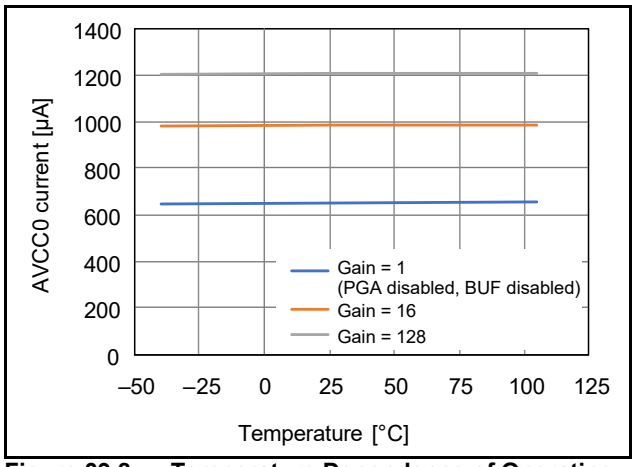

Figure 39.8 Temperature Dependence of Operating Current of 24-Bit Delta-Sigma A/D Converter (AVCC0 = 5.0 V, Normal Mode, OPCR.DSADLVM bit = 1)

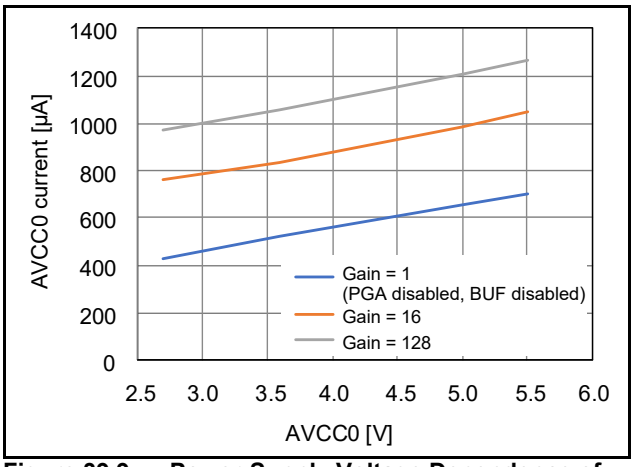

Figure 39.9 Power-Supply Voltage Dependence of Operating Current of 24-Bit Delta-Sigma A/D Converter (T_a = 25°C, Normal Mode, OPCR.DSADLVM bit = 1)

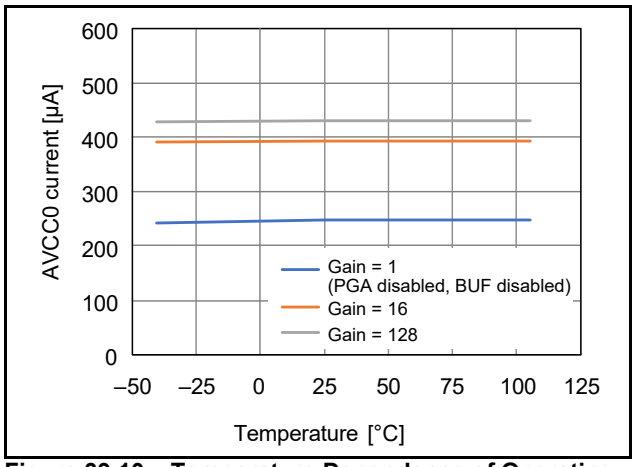

Figure 39.10 Temperature Dependence of Operating Current of 24-Bit Delta-Sigma A/D Converter (AVCC0 = 5.0 V, Low Power Mode, OPCR.DSADLVM bit = 0)

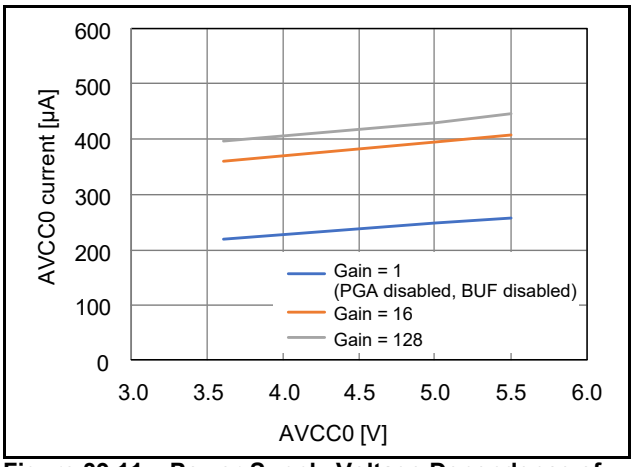

Figure 39.11 Power-Supply Voltage Dependence of Operating Current of 24-Bit Delta-Sigma A/D Converter (T_a = 25°C, Low Power Mode, OPCR.DSADLVM bit = 0)

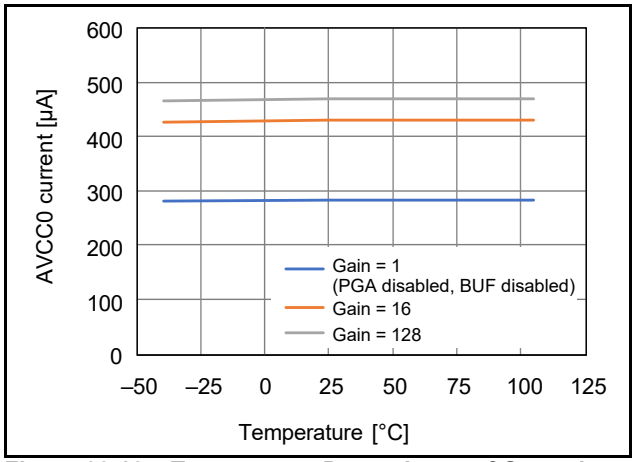

Figure 39.12 Temperature Dependence of Operating Current of 24-Bit Delta-Sigma A/D Converter (AVCC0 = 5.0 V, Low Power Mode, OPCR.DSADLVM bit = 1)

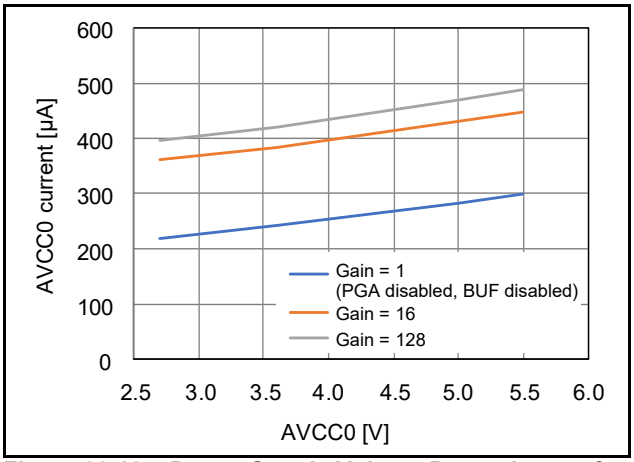

Figure 39.13 Power-Supply Voltage Dependence of Operating Current of 24-Bit Delta-Sigma A/D Converter (T_a = 25°C, Low Power Mode, OPCR.DSADLVM bit = 1)

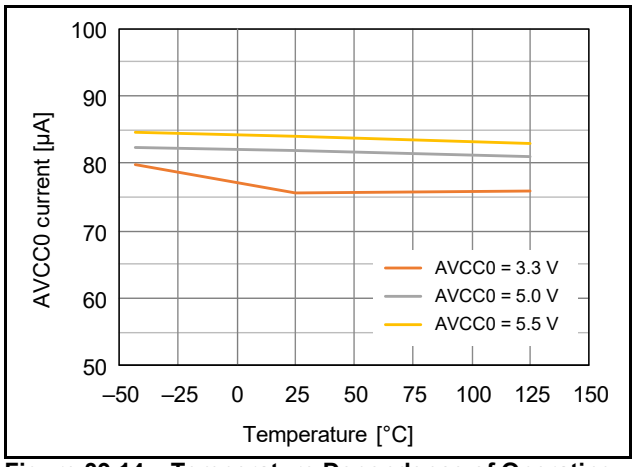

Figure 39.14 Temperature Dependence of Operating Current of Analog Input Buffer (Normal Mode)

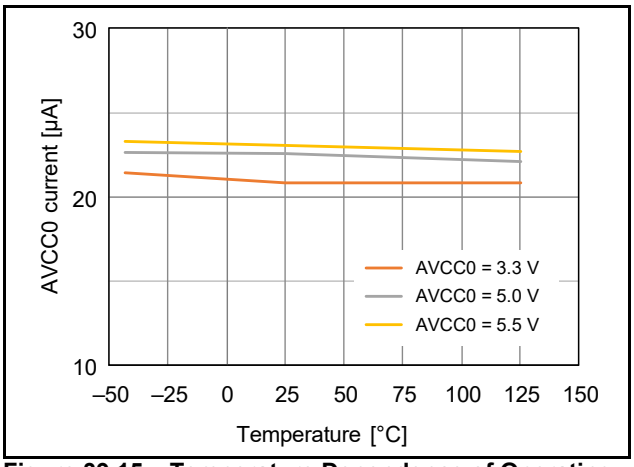

Figure 39.15 Temperature Dependence of Operating Current of Analog Input Buffer (Low Power Mode)

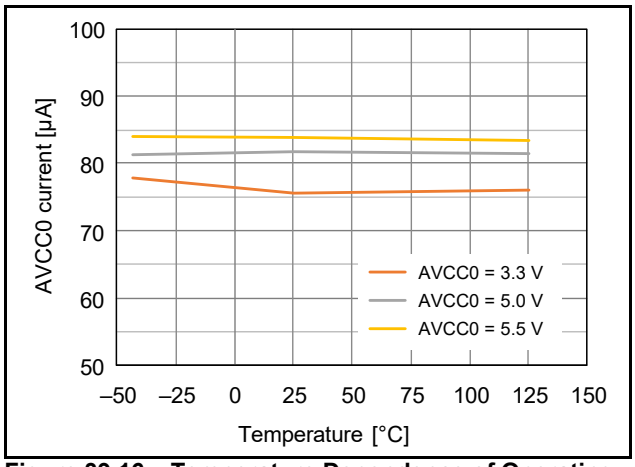

Figure 39.16 Temperature Dependence of Operating Current of Reference Buffer (Normal Mode)

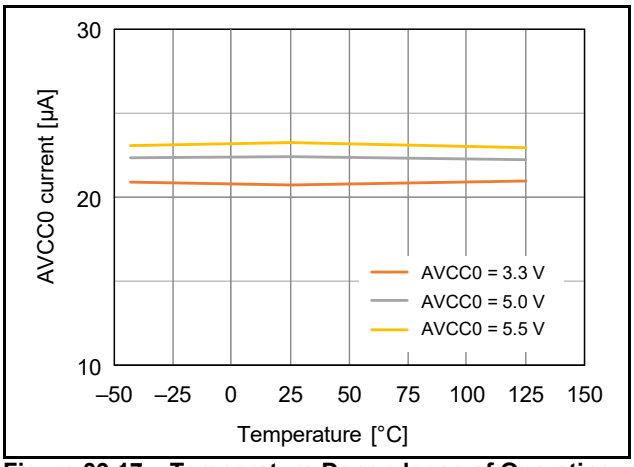

Figure 39.17 Temperature Dependence of Operating Current of Reference Buffer (Low Power Mode)

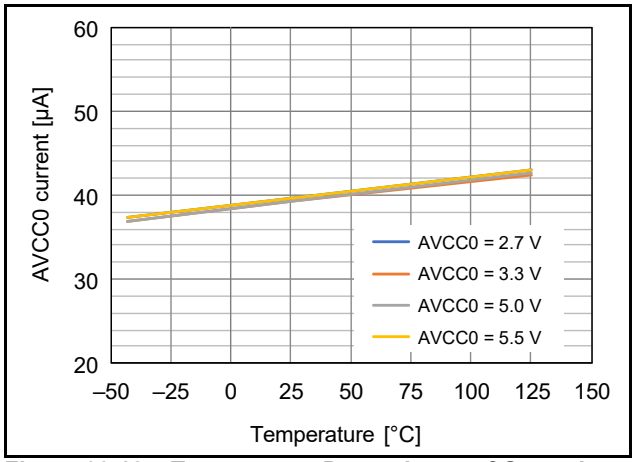

Figure 39.18 Temperature Dependence of Operating Current of Voltage Reference

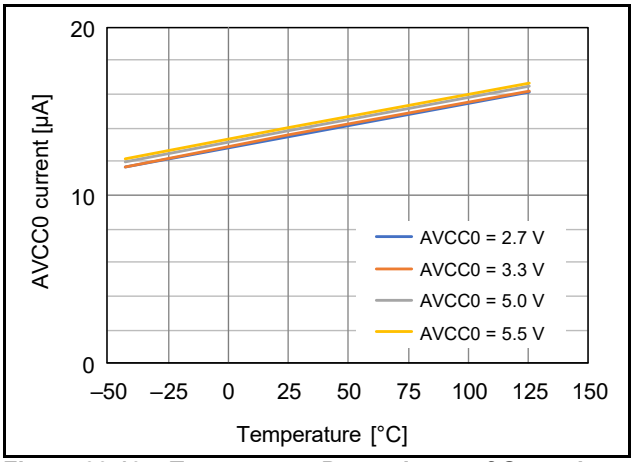

Figure 39.19 Temperature Dependence of Operating Current of Temperature Sensor

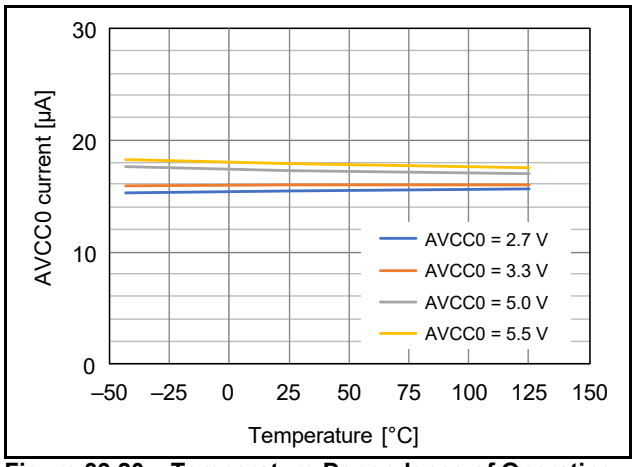

Figure 39.20 Temperature Dependence of Operating Current of Bias Voltage Generator

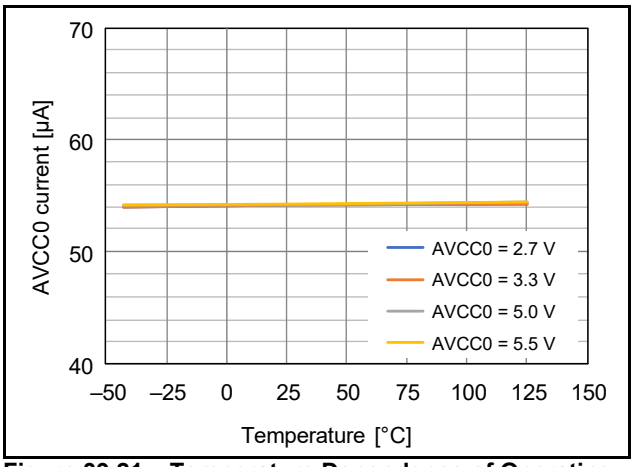

Figure 39.21 Temperature Dependence of Operating Current of Excitation Current Source

Table 39.15 DC Characteristics (12)

Conditions: 1.8 V ≤ VCC ≤ 5.5 V, 1.8 V ≤ AVCC0 ≤ 5.5 V, VSS = AVSS0 = 0 V, T_a = –40 to +105°C

Item		Symbol	Min.	Typ.*1	Max.	Unit	Test Conditions
12-bit A/D converter operating current	During A/D conversion (in high-speed conversion)	I_{AVCC0} (S12AD)	—	1.1	1.8	mA	
	During A/D conversion (in low-current mode)		—	0.6	1.1		
Reference power supply current	During A/D conversion (in high-speed conversion)	I_{REFH0}	—	71	122	μA	
	Current while waiting for A/D conversion (all units)		—	—	60	nA	
AVCC0 power down current		I_{STBY}	—	—	2.2	μA	

Note 1. Conditions for typical values are at AVCC0 = 5.0 V and T_a = 25°C.

Table 39.16 Permissible Output Currents (1)

Conditions: 1.8 V ≤ VCC = AVCC0 ≤ 5.5 V, VSS = AVSS0 = 0 V, T_a = –40 to +85°C

Item			Symbol	Max.	Unit
Permissible low-level output current (average value per pin)	P36 and P37		I_{OL}	4.0	mA
	Ports other than above	Normal drive output mode		4.0	
		High-drive output mode		8.0	
Permissible low-level output current (maximum value per pin)	P36 and P37			4.0	
	Ports other than above	Normal drive output mode		4.0	
		High-drive output mode		8.0	
Permissible low-level output current	Total of P14 to P17, P26, P27, P30, P31, P36, and P37		ΣI_{OL}	40	
	Total of PB0, PB1, PC4 to PC7, and PH0 to PH3			40	
	Total of all output pins			80	
Permissible high-level output current (average value per pin)	P36 and P37		I_{OH}	–4.0	
	Ports other than above	Normal drive output mode		–4.0	
		High-drive output mode		–8.0	
Permissible high-level output current (maximum value per pin)	P36 and P37			–4.0	
	Ports other than above	Normal drive output mode		–4.0	
		High-drive output mode		–8.0	
Permissible high-level output current	Total of P14 to P17, P26, P27, P30, P31, P36, and P37		ΣI_{OH}	–40	
	Total of PB0, PB1, PC4 to PC7, and PH0 to PH3			–40	
	Total of all output pins			–80	

Table 39.17 Permissible Output Currents (2)

Conditions: 1.8 V ≤ VCC = AVCC0 ≤ 5.5 V, VSS = AVSS0 = 0 V, T_a = –40 to +105°C

Item			Symbol	Max.	Unit
Permissible low-level output current (average value per pin)	P36 and P37		I_{OL}	4.0	mA
	Ports other than above	Normal drive output mode		4.0	
		High-drive output mode		8.0	
Permissible low-level output current (maximum value per pin)	P36 and P37			4.0	
	Ports other than above	Normal drive output mode		4.0	
		High-drive output mode		8.0	
Permissible low-level output current	Total of P14 to P17, P26, P27, P30, P31, P36, and P37		ΣI_{OL}	30	
	Total of PB0, PB1, PC4 to PC7, and PH0 to PH3			30	
	Total of all output pins			60	
Permissible high-level output current (average value per pin)	P36 and P37		I_{OH}	–4.0	
	Ports other than above	Normal drive output mode		–4.0	
		High-drive output mode		–8.0	
Permissible high-level output current (maximum value per pin)	P36 and P37			–4.0	
	Ports other than above	Normal drive output mode		–4.0	
		High-drive output mode		–8.0	
Permissible high-level output current	Total of P14 to P17, P26, P27, P30, P31, P36, and P37		ΣI_{OH}	–30	
	Total of PB0, PB1, PC4 to PC7, and PH0 to PH3			–30	
	Total of all output pins			–60	

Table 39.18 Output Voltage (1)

Conditions: 1.8 V ≤ VCC = AVCC0 < 2.7 V, VSS = AVSS0 = 0 V, T_a = –40 to +105°C

Item			Symbol	Min.	Max.	Unit	Test Conditions
Low-level output voltage	All output ports	Normal drive output mode	V_{OL}	—	0.3	V	I_{OL} = 0.5 mA
		High-drive output mode		—	0.3		I_{OL} = 1.0 mA
High-level output voltage	All output ports	Normal drive output mode	V_{OH}	VCC – 0.3	—	V	I_{OH} = –0.5 mA
		High-drive output mode		VCC – 0.3	—		I_{OH} = –1.0 mA

Table 39.19 Output Voltage (2)

Conditions: 2.7 V ≤ VCC = AVCC0 < 4.0 V, VSS = AVSS0 = 0 V, T_a = –40 to +105°C

Item			Symbol	Min.	Max.	Unit	Test Conditions
Low-level output voltage	All output ports (except for RIIC pins)	Normal drive output mode	V_{OL}	—	0.5	V	I_{OL} = 1.0 mA
		High-drive output mode		—	0.5		I_{OL} = 2.0 mA
	RIIC pins	Normal drive output mode		—	0.4		I_{OL} = 3.0 mA
		High-drive output mode		—	0.6		I_{OL} = 6.0 mA
High-level output voltage	All output ports	Normal drive output mode	V_{OH}	VCC – 0.5	—	V	I_{OH} = –1.0 mA
		High-drive output mode		VCC – 0.5	—		I_{OH} = –2.0 mA

Table 39.20 Output Voltage (3)

Conditions: 4.0 V ≤ VCC = AVCC0 ≤ 5.5 V, VSS = AVSS0 = 0 V, T_a = –40 to +105°C

Item			Symbol	Min.	Max.	Unit	Test Conditions
Low-level output voltage	All output ports (except for RIIC pins)	Normal drive output mode	V_{OL}	—	0.8	V	I_{OL} = 2.0 mA
		High-drive output mode		—	0.8		I_{OL} = 4.0 mA
	RIIC pins	Normal drive output mode		—	0.4		I_{OL} = 3.0 mA
		High-drive output mode		—	0.6		I_{OL} = 6.0 mA
High-level output voltage	All output ports	Normal drive output mode	V_{OH}	VCC – 0.8	—	V	I_{OH} = –2.0 mA
		High-drive output mode		VCC – 0.8	—		I_{OH} = –4.0 mA

Table 39.21 Thermal Resistance Value (Reference)

Item	Package	Symbol	Max.	Unit	Test Conditions
Thermal resistance	48-pin LFQFP (PLQP0048KB-B)	θ_{ja}	50.7	°C/W	JESD51-2 and JESD51-7 compliant
	40-pin HWQFN (PWQN0040KC-A)		18.8*1		
	48-pin LFQFP (PLQP0048KB-B)	Ψ_{jt}	1.07	°C/W	JESD51-2 and JESD51-7 compliant
	40-pin HWQFN (PWQN0040KC-A)		0.07*1		

Note: The values are reference values when the 4-layer board is used. Thermal resistance depends on the number of layers or size of the board. For details, refer to the JEDEC standards.

Note 1. This value applies when the exposed die pad for this purpose is connected to VSS.

39.3.1 Typical I/O Pin Output Characteristics (1)

Figure 39.22 to Figure 39.26 show the characteristics when normal drive output is selected by the drive capacity control register.

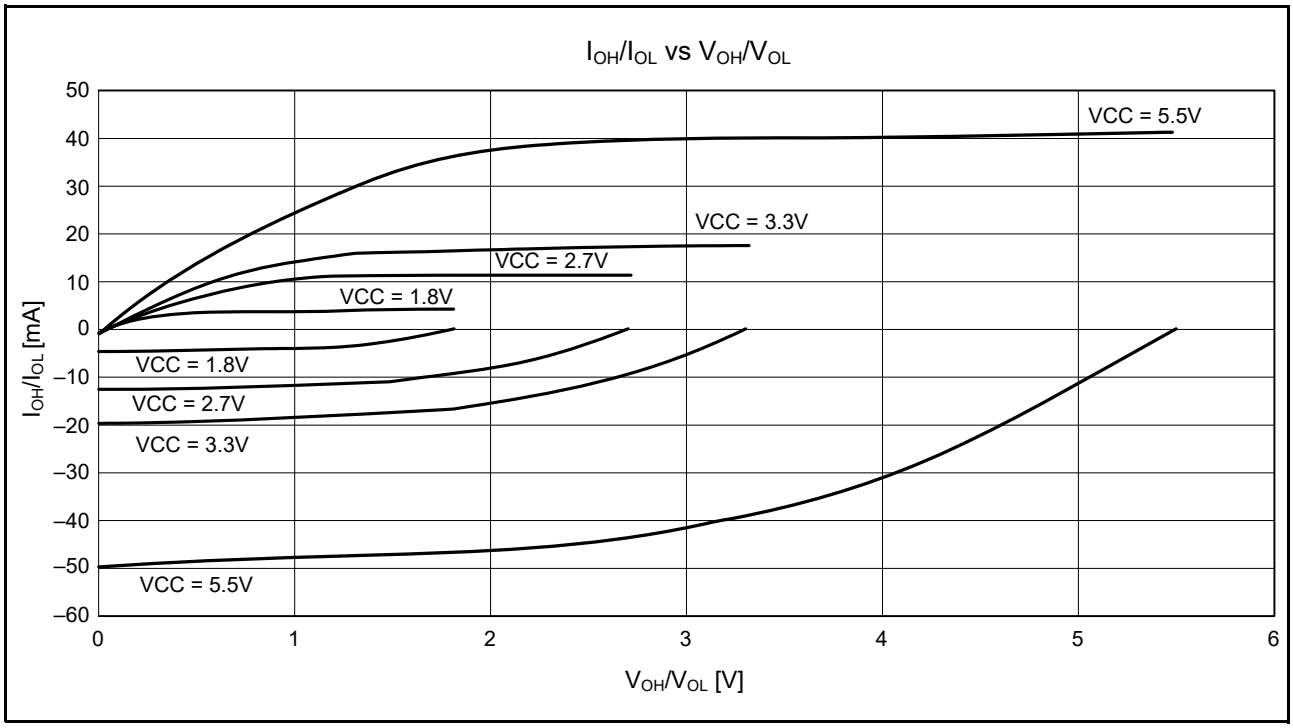

Figure 39.22 V_{OH}/V_{OL} and I_{OH}/I_{OL} Voltage Characteristics at T_a = 25°C When Normal Drive Output is Selected (Reference Data)

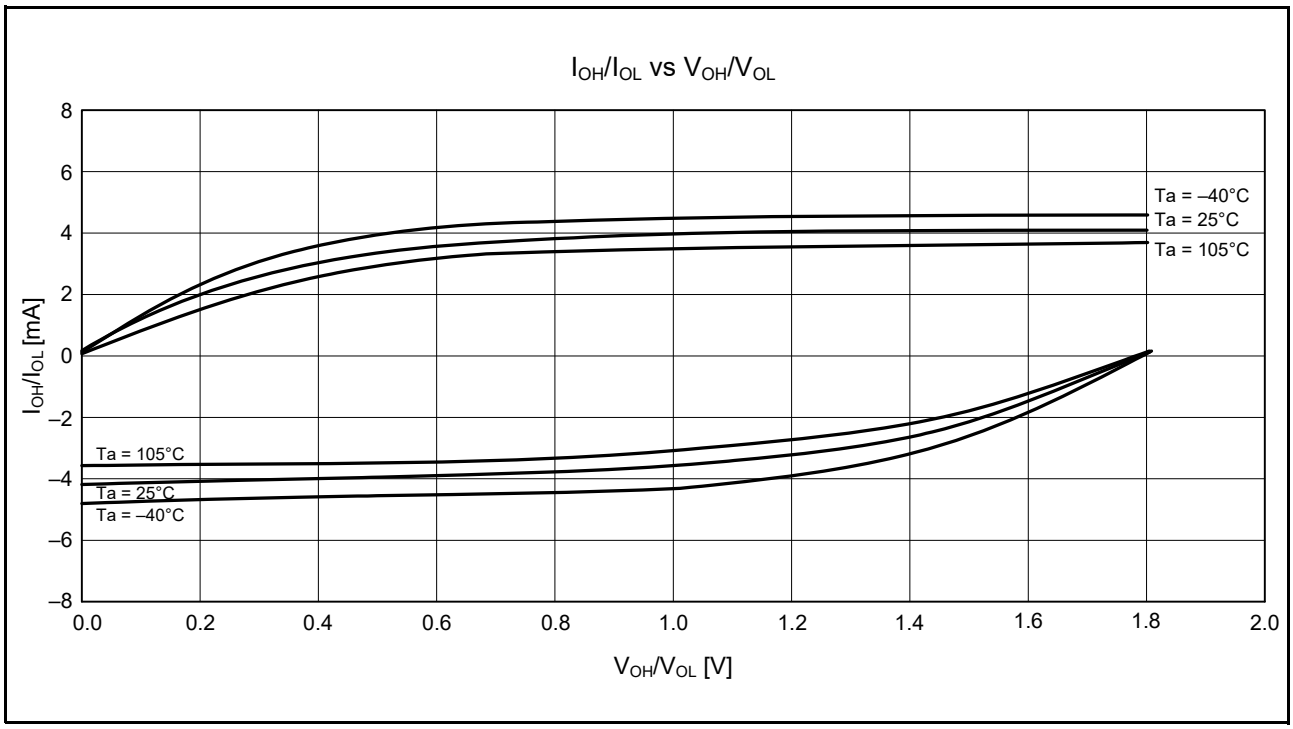

Figure 39.23 V_{OH}/V_{OL} and I_{OH}/I_{OL} Temperature Characteristics at VCC = 1.8 V When Normal Drive Output is Selected (Reference Data)

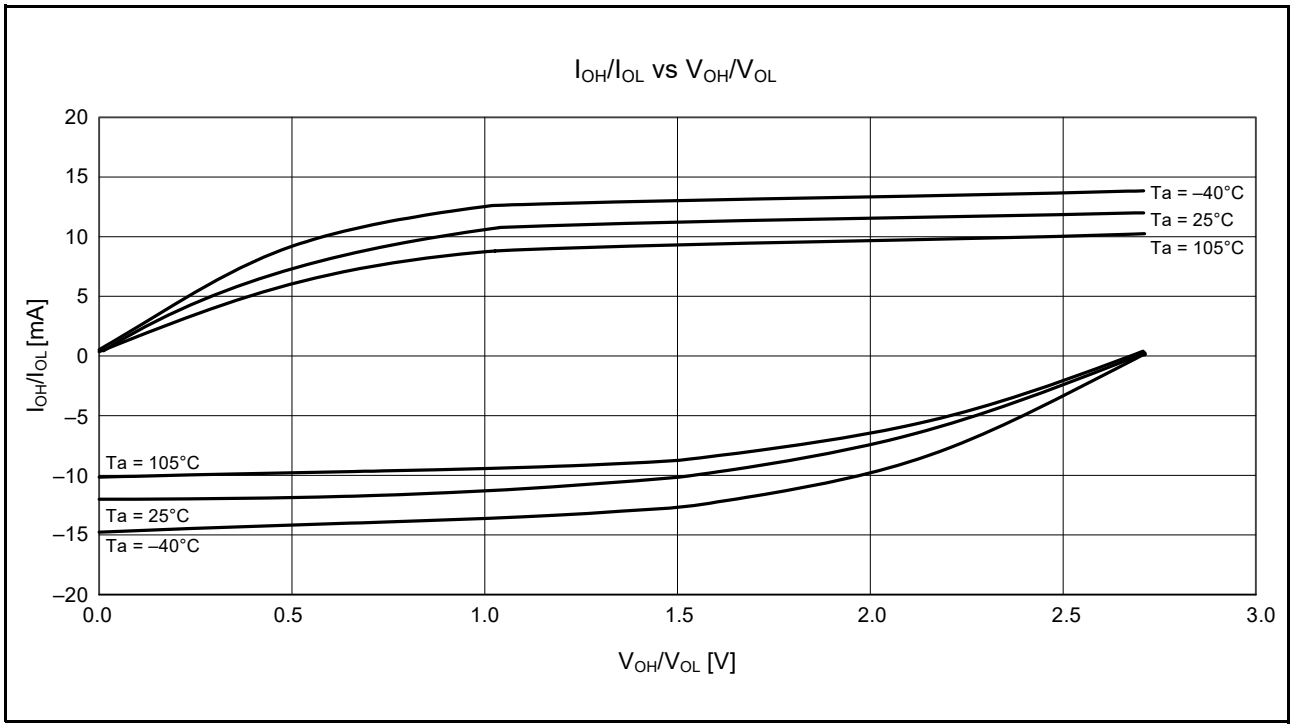

Figure 39.24 V_{OH}/V_{OL} and I_{OH}/I_{OL} Temperature Characteristics at VCC = 2.7 V When Normal Drive Output is Selected (Reference Data)

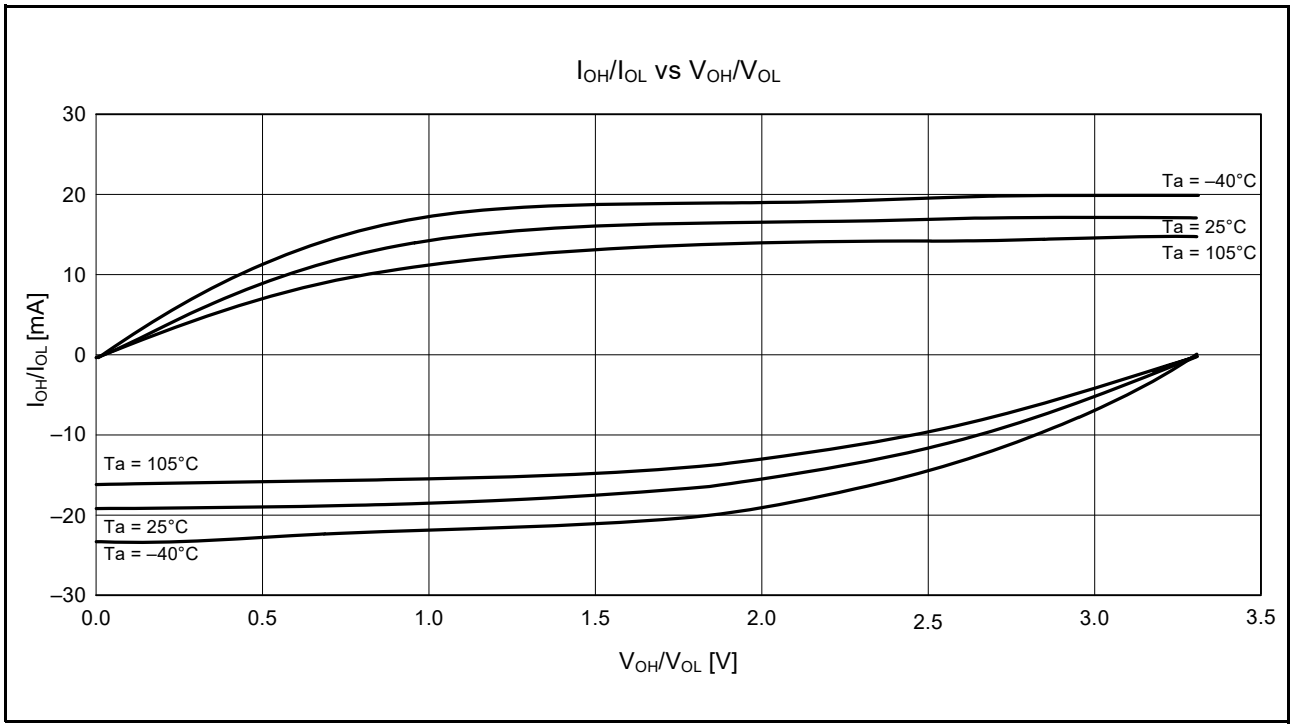

Figure 39.25 V_{OH}/V_{OL} and I_{OH}/I_{OL} Temperature Characteristics at VCC = 3.3 V When Normal Drive Output is Selected (Reference Data)

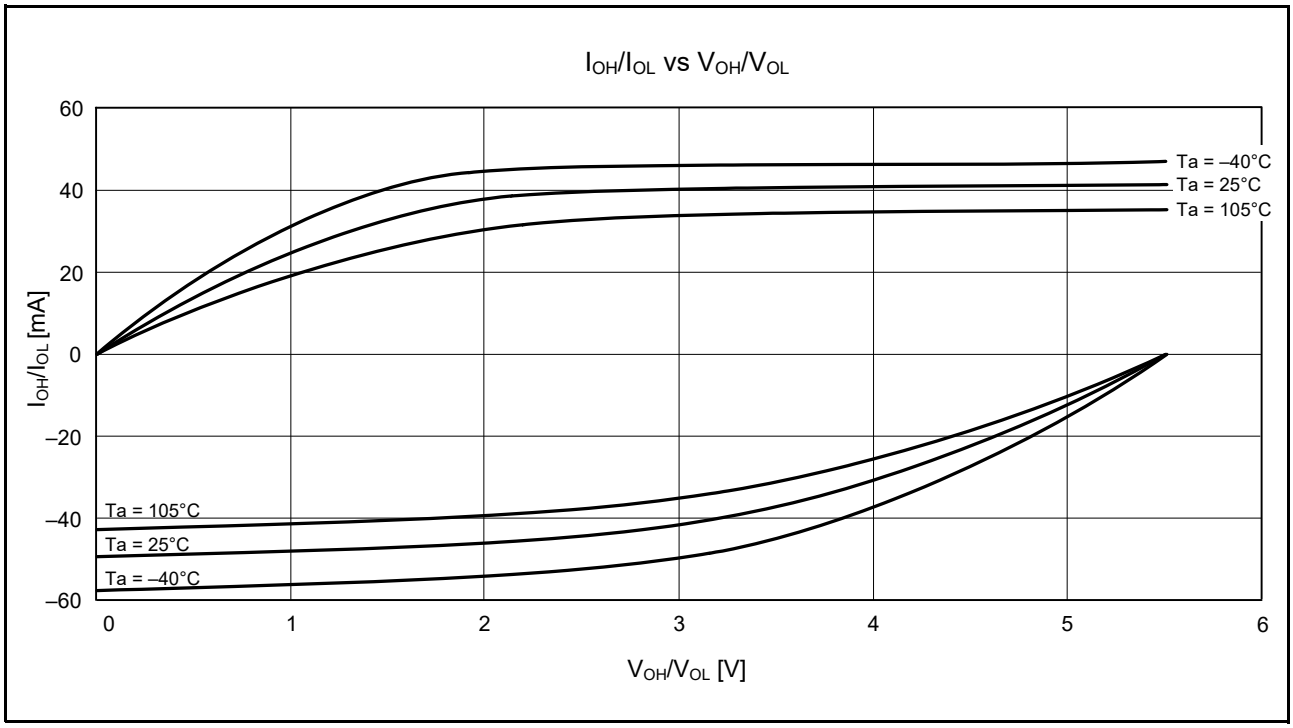

Figure 39.26 V_{OH}/V_{OL} and I_{OH}/I_{OL} Temperature Characteristics at VCC = 5.5 V When Normal Drive Output is Selected (Reference Data)

39.3.2 Typical I/O Pin Output Characteristics (2)

Figure 39.27 to Figure 39.31 show the characteristics when high-drive output is selected by the drive capacity control register.

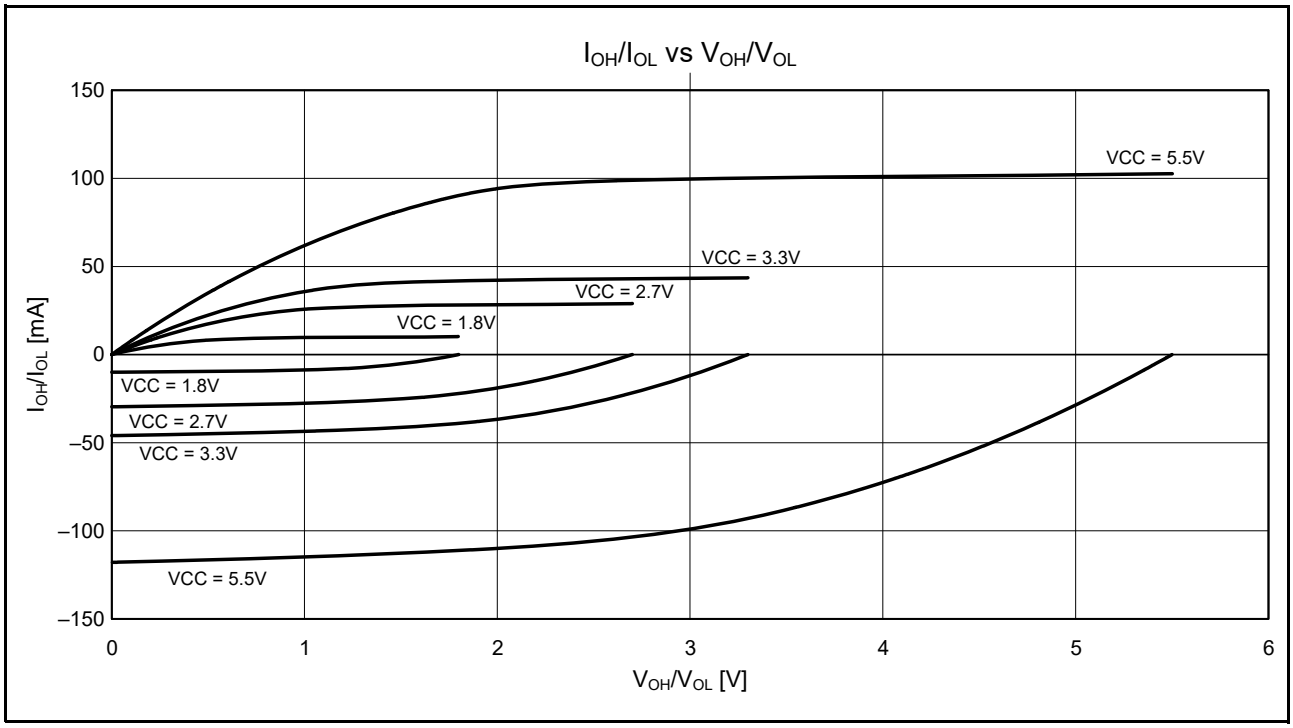

Figure 39.27 V_{OH}/V_{OL} and I_{OH}/I_{OL} Voltage Characteristics at T_a = 25°C When High-Drive Output is Selected (Reference Data)

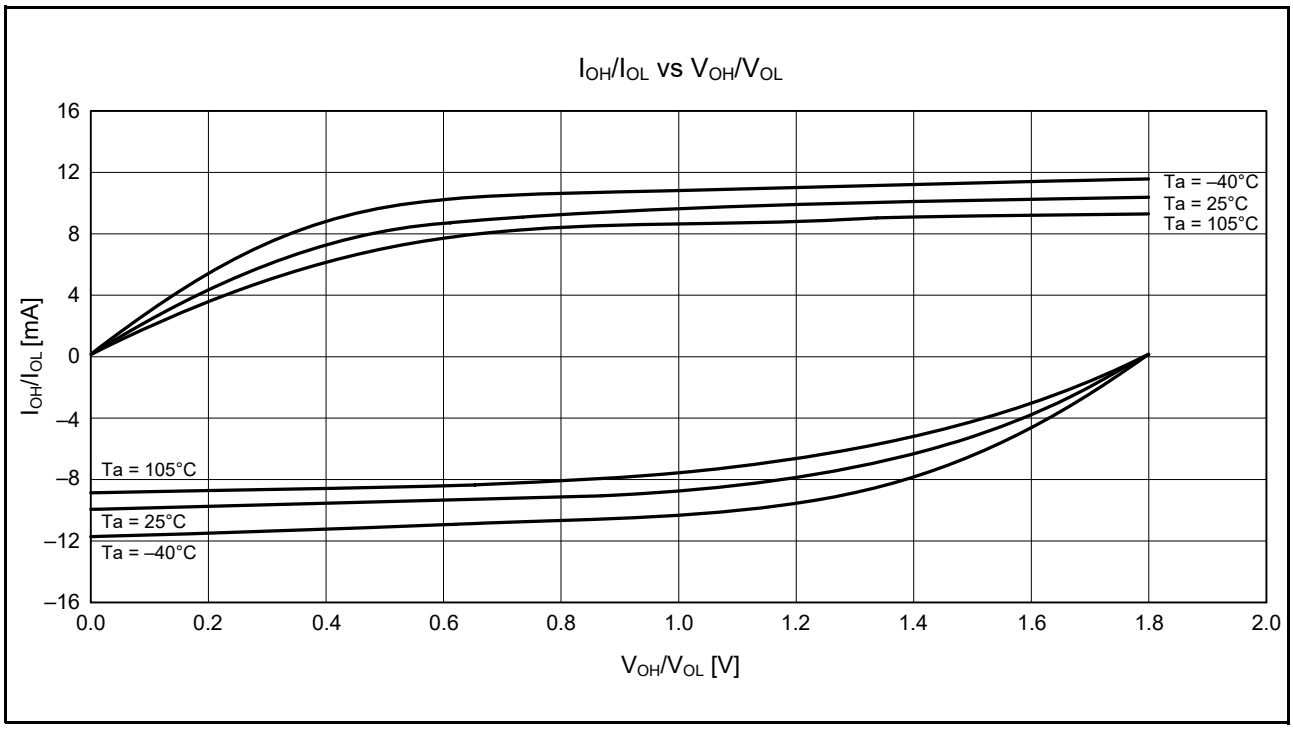

Figure 39.28 V_{OH}/V_{OL} and I_{OH}/I_{OL} Temperature Characteristics at VCC = 1.8 V When High-Drive Output is Selected (Reference Data)

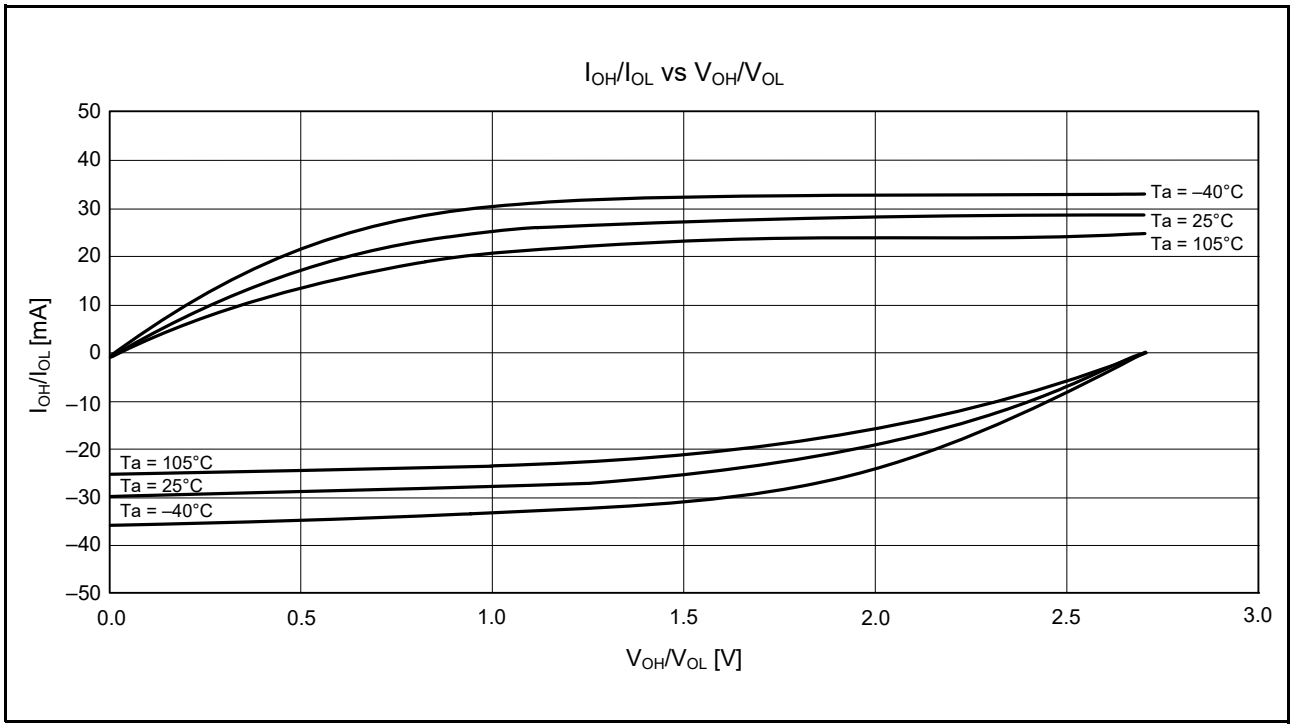

Figure 39.29 **V_{OH}/V_{OL} and I_{OH}/I_{OL} Temperature Characteristics at VCC = 2.7 V When High-Drive Output is Selected (Reference Data)**

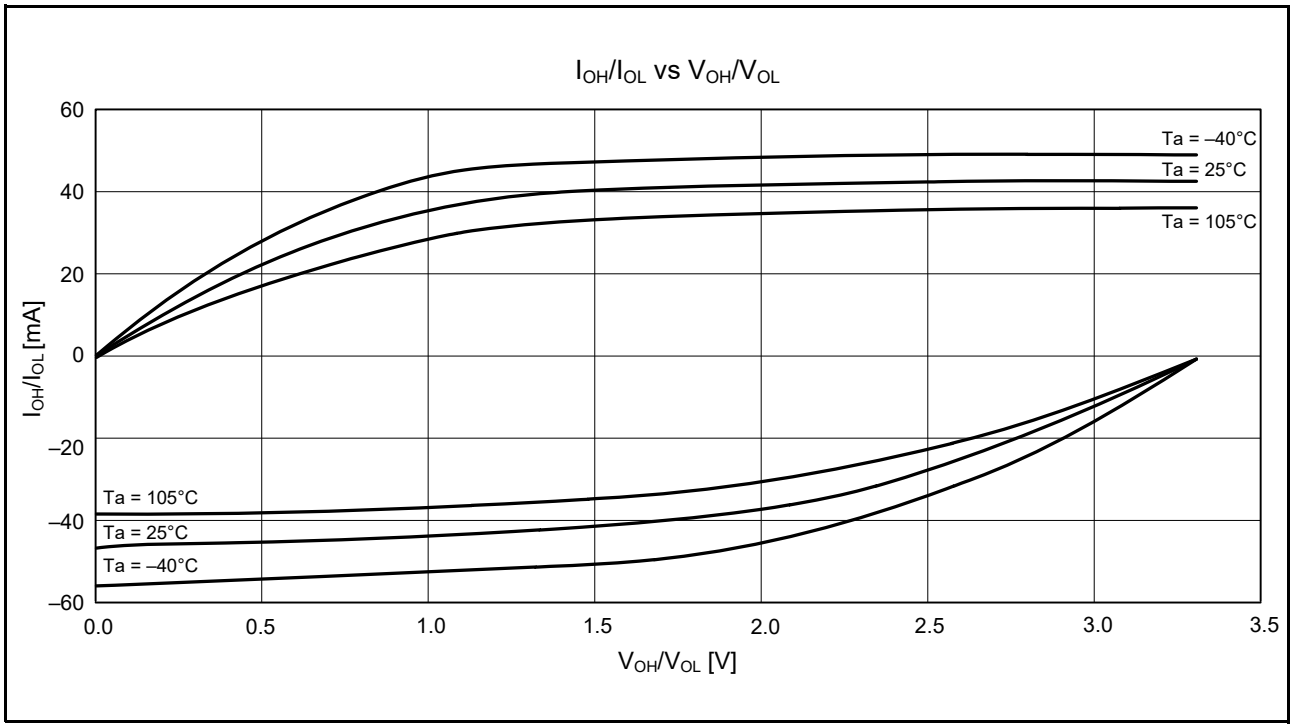

Figure 39.30 **V_{OH}/V_{OL} and I_{OH}/I_{OL} Temperature Characteristics at VCC = 3.3 V When High-Drive Output is Selected (Reference Data)**

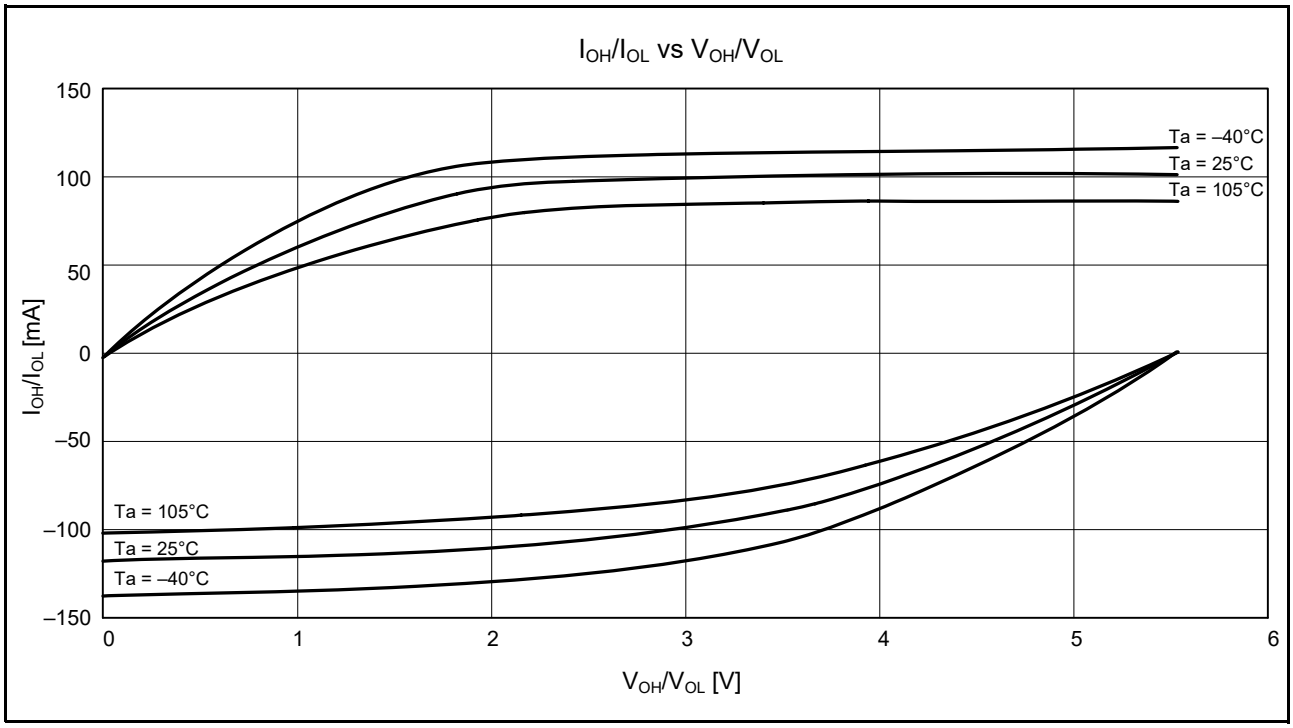

Figure 39.31 V_{OH}/V_{OL} and I_{OH}/I_{OL} Temperature Characteristics at VCC = 5.5 V When High-Drive Output is Selected (Reference Data)

39.3.3 Typical I/O Pin Output Characteristics (3)

Figure 39.32 to Figure 39.35 show the characteristics of the RIIC output pin.

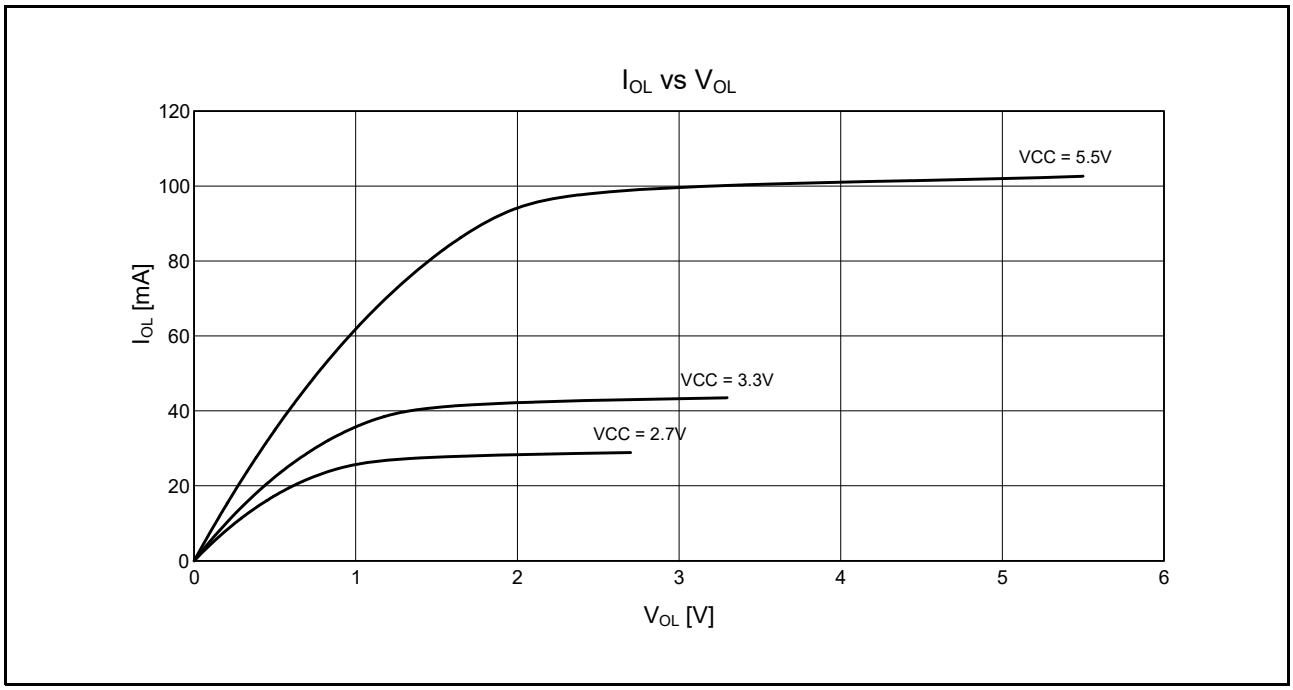

Figure 39.32 V_{OL} and I_{OL} Voltage Characteristics of RIIC Output Pin at T_a = 25°C (Reference Data)

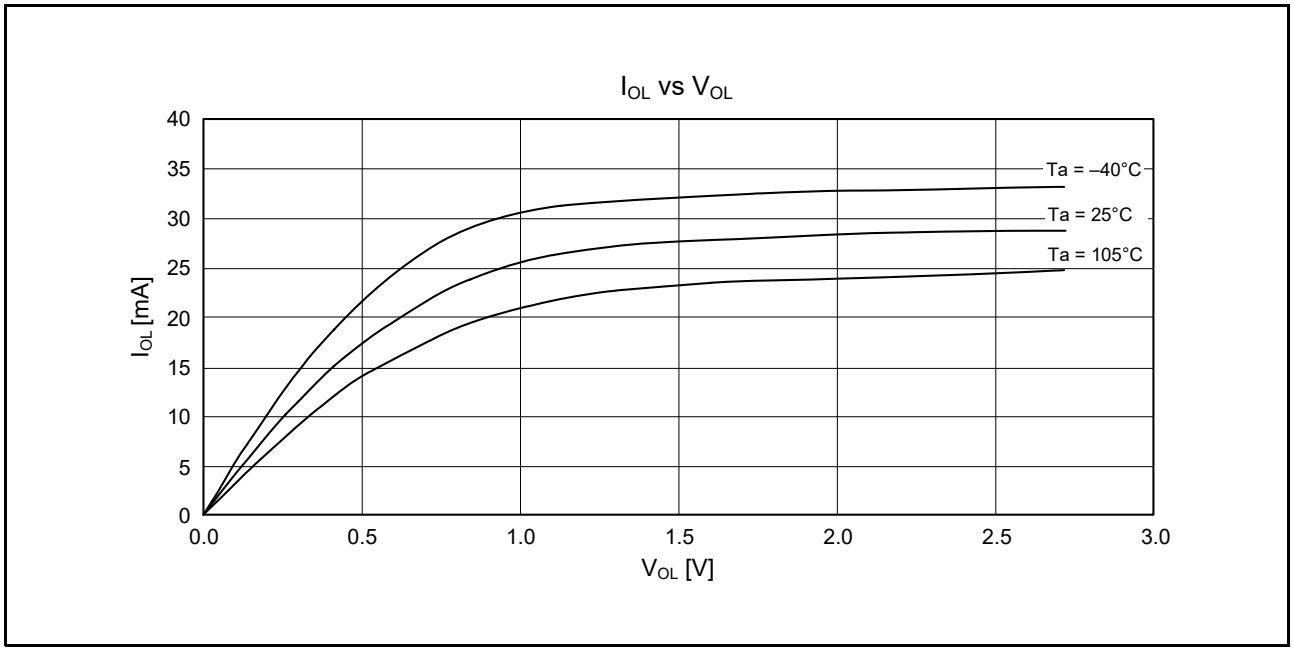

Figure 39.33 V_{OL} and I_{OL} Temperature Characteristics of RIIC Output Pin at VCC = 2.7 V (Reference Data)

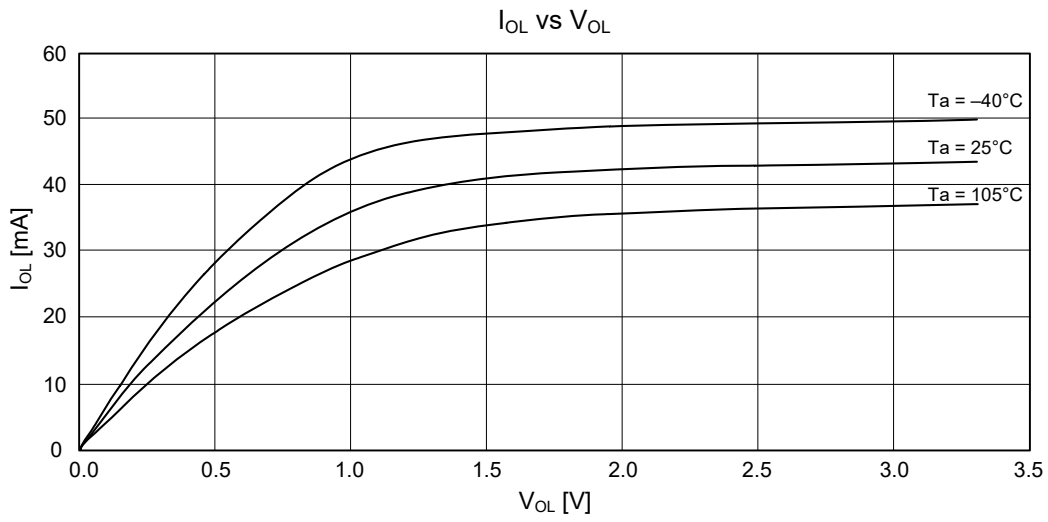

Figure 39.34 V_{OL} and I_{OL} Temperature Characteristics of RIIC Output Pin at VCC = 3.3 V (Reference Data)

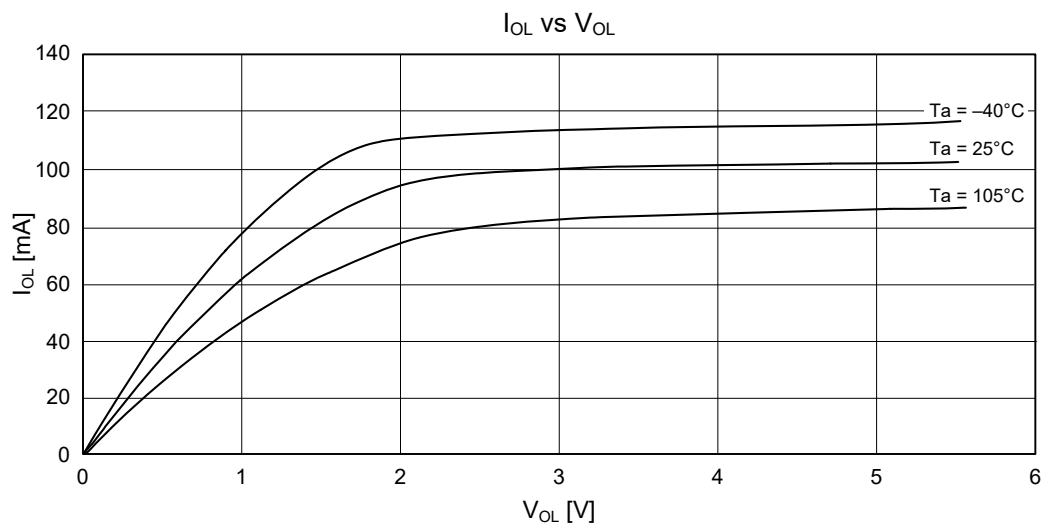

Figure 39.35 V_{OL} and I_{OL} Temperature Characteristics of RIIC Output Pin at VCC = 5.5 V (Reference Data)

39.4 AC Characteristics

39.4.1 Clock Timing

Table 39.22 Operating Frequency Value (High-Speed Operating Mode)

Conditions: 1.8 V ≤ VCC = AVCC0 ≤ 5.5 V, VSS = AVSS0 = VREFL0 = 0 V, T_a = –40 to +105°C

Item		Symbol	VCC			Unit
			1.8 V ≤ VCC < 2.4 V	2.4 V ≤ VCC < 2.7 V	2.7 V ≤ VCC ≤ 5.5 V	
Maximum operating frequency*3	System clock (ICLK)	f_{max}	8	16	32	MHz
	FlashIF clock (FCLK)*1, *2		8	16	32	
	Peripheral module clock (PCLKA)		8	16	32	
	Peripheral module clock (PCLKB)		8	16	32	
	Peripheral module clock (PCLKD)		8	16	32	

Note 1. The lower-limit frequency of FCLK is 1 MHz during programming or erasing of the flash memory. When FCLK is in use at below 4 MHz, the frequency can be set to 1 MHz, 2 MHz, or 3 MHz. A non-integer frequency such as 1.5 MHz cannot be set.
Note 2. The frequency accuracy of FCLK must be within ±3.5%.
Note 3. The maximum operating frequency listed above does not include errors of the external oscillator and internal oscillator. For details on the range for the guaranteed operation, see Table 39.24, Clock Timing.

Table 39.23 Operating Frequency Value (Middle-Speed Operating Mode)

Conditions: 1.8 V ≤ VCC = AVCC0 ≤ 5.5 V, VSS = AVSS0 = VREFL0 = 0 V, T_a = –40 to +105°C

Item		Symbol	VCC			Unit
			1.8 V ≤ VCC < 2.4 V	2.4 V ≤ VCC < 2.7 V	2.7 V ≤ VCC ≤ 5.5 V	
Maximum operating frequency*3	System clock (ICLK)	f_{max}	8	12	12	MHz
	FlashIF clock (FCLK)*1, *2		8	12	12	
	Peripheral module clock (PCLKA)		8	12	12	
	Peripheral module clock (PCLKB)		8	12	12	
	Peripheral module clock (PCLKD)		8	12	12	

Note 1. The lower-limit frequency of FCLK is 1 MHz during programming or erasing of the flash memory. When using FCLK at below 4 MHz, the frequency can be set to 1 MHz, 2 MHz, or 3 MHz. A non-integer frequency such as 1.5 MHz cannot be set.
Note 2. The frequency accuracy of FCLK must be within ±3.5%.
Note 3. The maximum operating frequency listed above does not include errors of the external oscillator and internal oscillator. For details on the range for the guaranteed operation, see Table 39.24, Clock Timing.

Table 39.24 Clock Timing

Conditions: 1.8 V ≤ VCC = AVCC0 ≤ 5.5 V, VSS = AVSS0 = VREFL0 = 0 V, T_a = –40 to +105°C

Item		Symbol	Min.	Typ.	Max.	Unit	Test Conditions
EXTAL external clock input cycle time		t_{Xcyc}	50	—	—	ns	Figure 39.36
EXTAL external clock input high pulse width		t_{XH}	20	—	—	ns	
EXTAL external clock input low pulse width		t_{XL}	20	—	—	ns	
EXTAL external clock rise time		t_{Xr}	—	—	5	ns	
EXTAL external clock fall time		t_{Xf}	—	—	5	ns	
EXTAL external clock input wait time*1		t_{XWT}	0.5	—	—	μs	
Main clock oscillator oscillation frequency*2	2.4 ≤ VCC ≤ 5.5	f_{MAIN}	1	—	20	MHz	
	1.8 ≤ VCC < 2.4		1	—	8		
Main clock oscillation stabilization time (crystal)*2		$t_{MAINOSC}$	—	3	—	ms	Figure 39.37
Main clock oscillation stabilization time (ceramic resonator)*2		$t_{MAINOSC}$	—	50	—	μs	
LOCO clock oscillation frequency		f_{LOCO}	3.44	4.00	4.56	MHz	
LOCO clock oscillation stabilization time		t_{LOCO}	—	—	0.5	μs	Figure 39.38
IWDT-dedicated clock oscillation frequency		f_{ILOCO}	12.75	15.00	17.25	kHz	
IWDT-dedicated clock oscillation stabilization time		t_{ILOCO}	—	—	50	μs	Figure 39.39
HOCO clock oscillation frequency		f_{HOCO}	31.52	32.00	32.48	MHz	T_a = –40 to +85°C
			31.68	32.00	32.32		T_a = –20 to +85°C
			31.36	32.00	32.64		T_a = –40 to +105°C
HOCO clock oscillation stabilization time		t_{HOCO}	—	—	41.3	μs	Figure 39.41
PLL input frequency*3		f_{PLLIN}	4	—	8	MHz	
PLL circuit oscillation frequency*3		f_{PLL}	24	—	32	MHz	
PLL clock oscillation stabilization time		t_{PLL}	—	—	74.4	μs	Figure 39.42
PLL free-running oscillation frequency		f_{PLLFR}	—	8	—	MHz	

Note 1. Time until the clock can be used after the main clock oscillator stop bit (MOSCCR.MOSTP) is set to 0 (operating).

Note 2. Reference values when an 8-MHz resonator is used.
When specifying the main clock oscillator stabilization time, set the MOSCWTCR register with a stabilization time value that is equal to or greater than the resonator-manufacturer-recommended value.
After the MOSCCR.MOSTP bit is changed to enable the main clock oscillator, confirm that the OSCOVFSR.MOOVF flag has become 1, and then start using the main clock.

Note 3. The VCC range should be 2.4 to 5.5 V when the PLL is used.

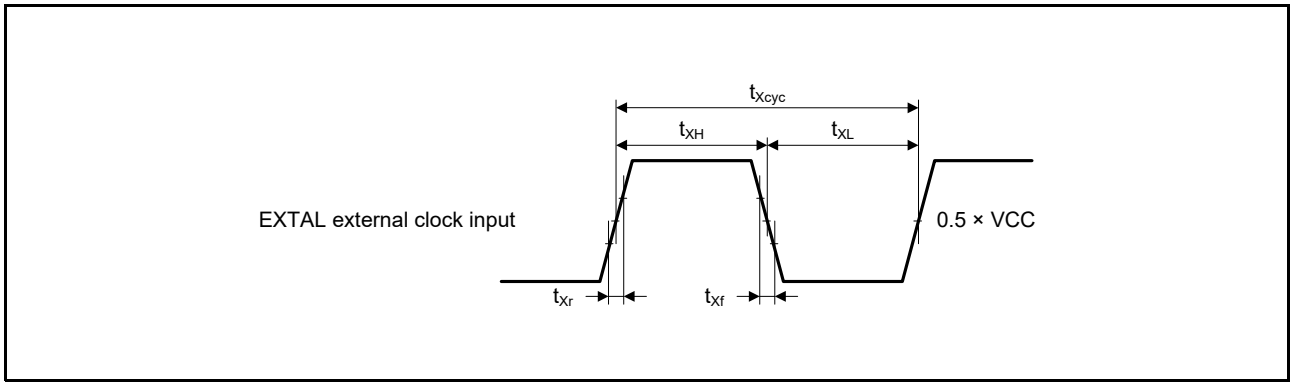

Figure 39.36 EXTAL External Clock Input Timing

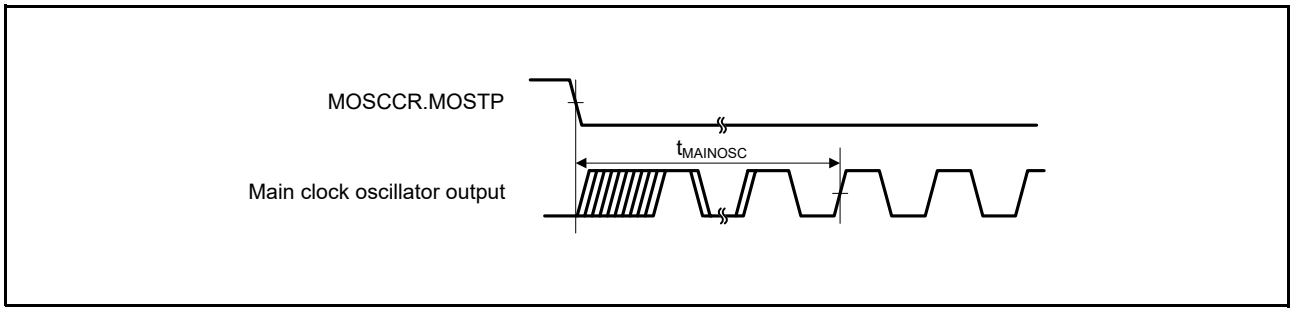

Figure 39.37 Main Clock Oscillation Start Timing

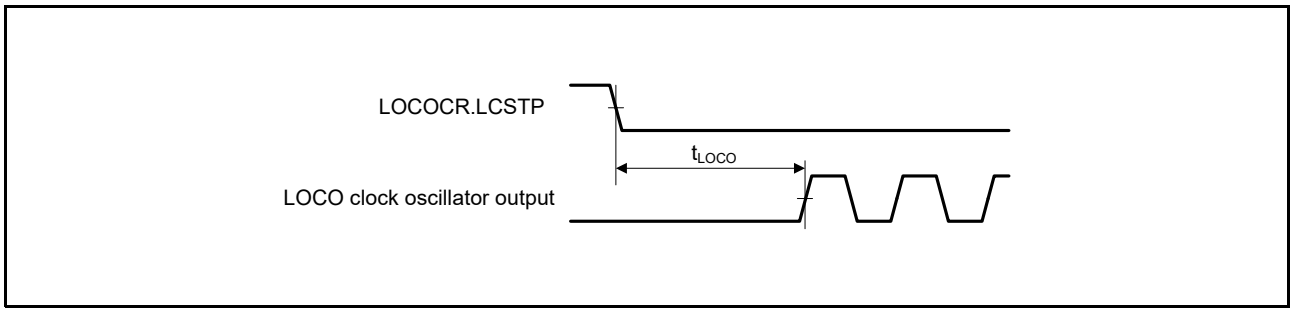

Figure 39.38 LOCO Clock Oscillation Start Timing

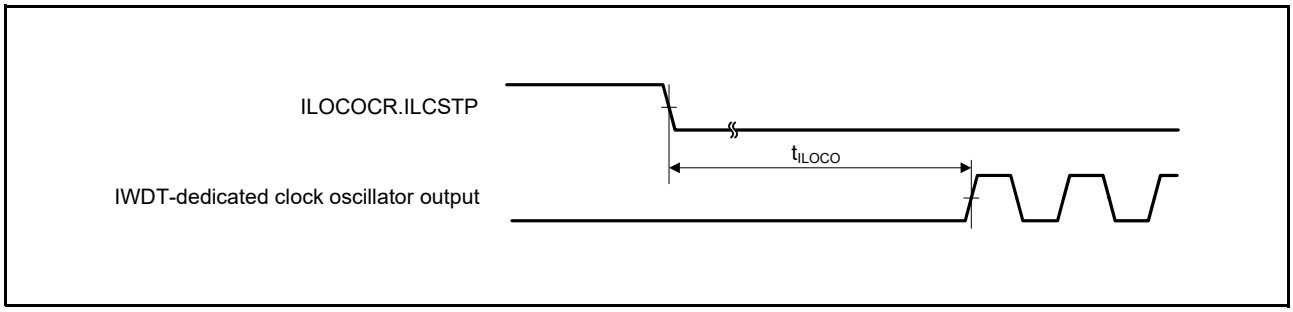

Figure 39.39 IWDT-Dedicated Clock Oscillation Start Timing

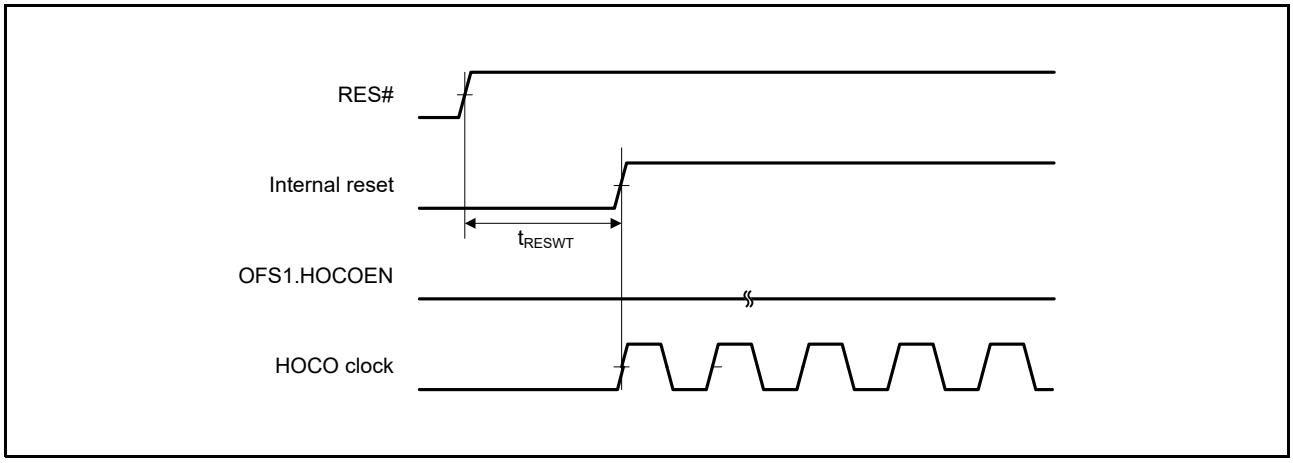

Figure 39.40 HOCO Clock Oscillation Start Timing (After Release from a Reset by Setting OFS1.HOCOEN Bit to 0)

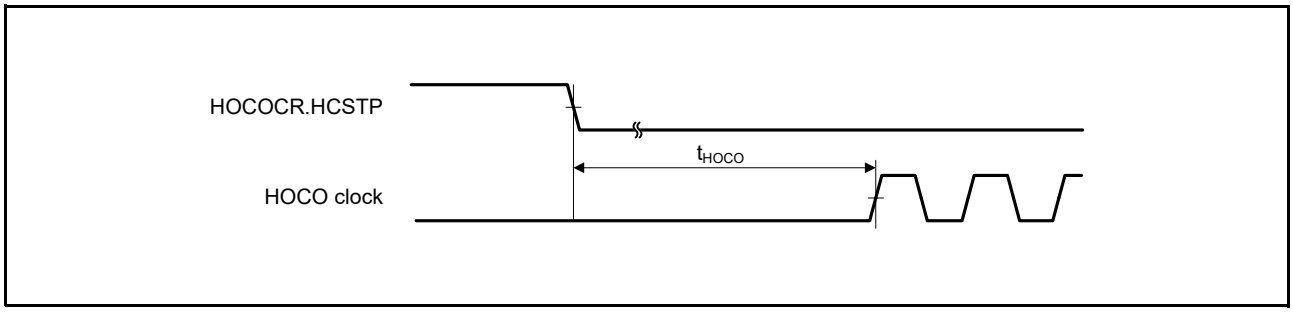

Figure 39.41 HOCO Clock Oscillation Start Timing (Oscillation is Started by Setting HOCOCR.HCSTP Bit)

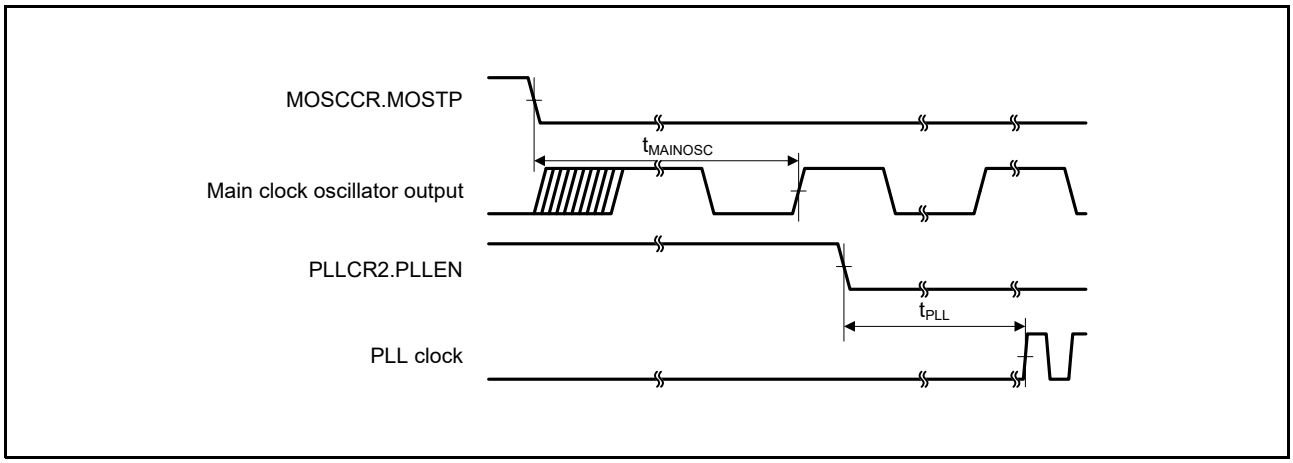

Figure 39.42 PLL Clock Oscillation Start Timing (PLL is Operated after Main Clock Oscillation Has Been Stabled)

39.4.2 Reset Timing

Table 39.25 Reset Timing

Conditions: 1.8 V ≤ VCC = AVCC0 ≤ 5.5 V, VSS = AVSS0 = VREFL0 = 0 V, T_a = –40 to +105°C

Item		Symbol	Min.	Typ.	Max.	Unit	Test Conditions
RES# pulse width	At power-on	t_{RESWP}	3	—	—	ms	Figure 39.43
	Other than above	t_{RESW}	30	—	—	μs	Figure 39.44
Wait time after release from the RES# pin reset (at power-on)	At normal startup*1	t_{RESWT}	—	8.5	—	ms	Figure 39.43
	During fast startup time*2	t_{RESWT}	—	650	—	μs	
Wait time after release from the RES# pin reset (from a warm start)		t_{RESWT}	—	310	—	μs	Figure 39.44
Independent watchdog timer reset period		t_{RESWIW}	—	1	—	IWDT clock cycle	Figure 39.45
Software reset period		t_{RESWSW}	—	1	—	ICLK cycle	
Wait time after release from the independent watchdog timer reset*3		t_{RESWT2}	—	350	—	μs	
Wait time after release from the software reset		t_{RESWT2}	—	220	—	μs	

Note 1. When the OFS1.LVDAS and OFS1.FASTSTUP bits are 1
Note 2. When the OFS1.LVDAS and/or OFS1.FASTSTUP bits are 0
Note 3. When the IWDTCR.CKS[3:0] bits are 0000b

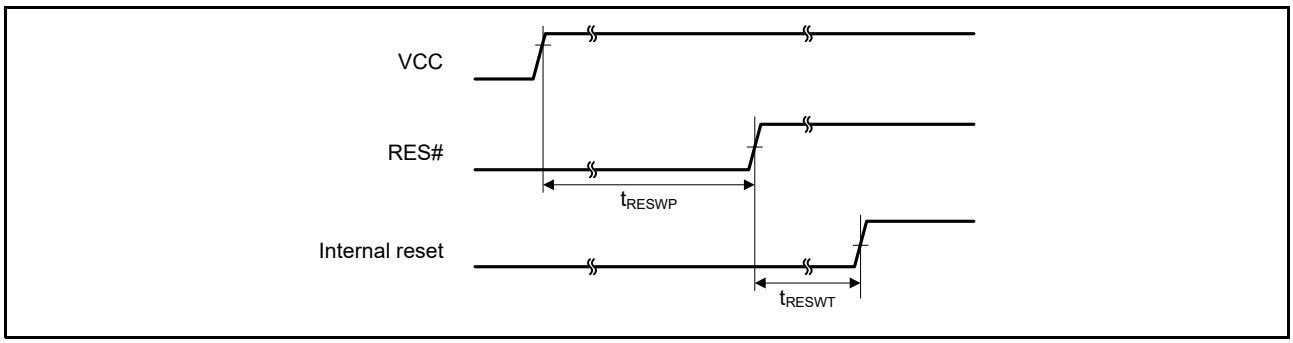

Figure 39.43 Reset Input Timing at Power-On

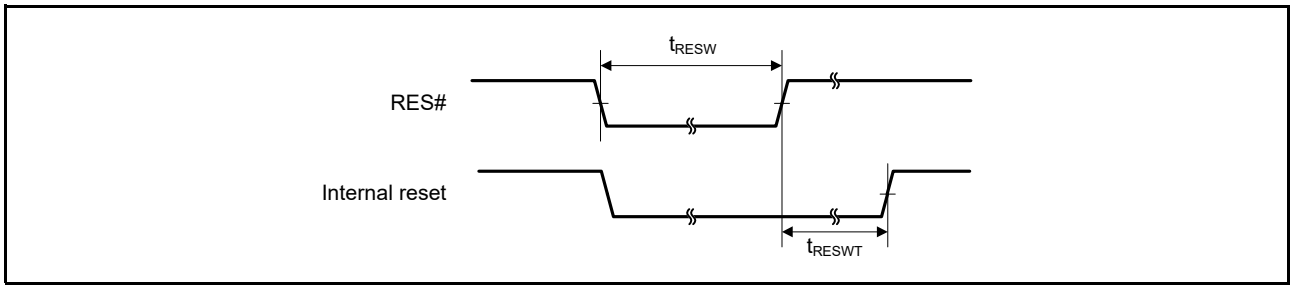

Figure 39.44 Reset Input Timing (1)

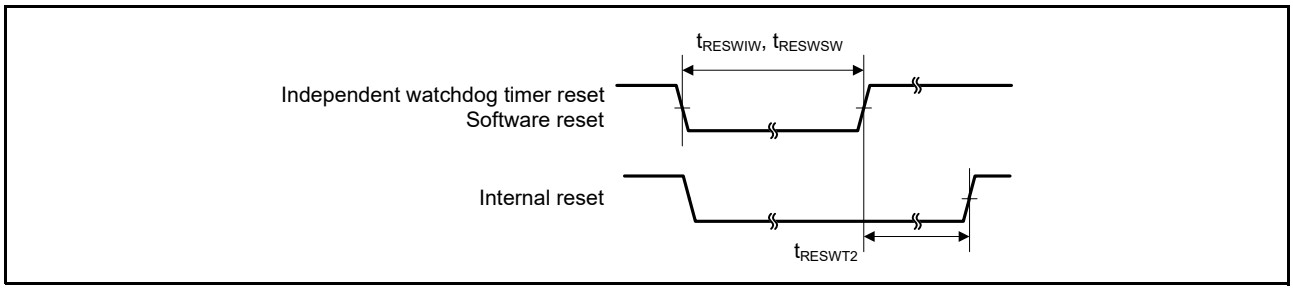

Figure 39.45 Reset Input Timing (2)

39.4.3 Timing of Recovery from Low Power Consumption Modes

Table 39.26 Timing of Recovery from Low Power Consumption Modes (1)

Conditions: 1.8 V ≤ VCC = AVCC0 ≤ 5.5 V, VSS = AVSS0 = VREFL0 = 0 V, T_a = –40 to +105°C

Item				Symbol	Min.	Typ.	Max.	Unit	Test Conditions
Recovery time from software standby mode*1	High-speed mode	Crystal connected to main clock oscillator	Main clock oscillator operating*2	t_{SBYMC}	—	2	3	ms	Figure 39.46
		External clock input to main clock oscillator	Main clock oscillator operating*3	t_{SBYEX}	—	35	50	μs	
		HOCO clock oscillator operating		t_{SBYHO}	—	40	55	μs	
		LOCO clock oscillator operating		t_{SBYLO}	—	40	55	μs	

Note 1. The recovery time varies depending on the state of each oscillator when the WAIT instruction is executed. When multiple oscillators are operating, the recovery time varies depending on the operating state of the oscillators that are not selected as the system clock source. The above table applies when only the corresponding clock is operating.

Note 2. When the frequency of the crystal is 20 MHz
When the main clock oscillator wait control register (MOSCWTCR) is set to 04h

Note 3. When the frequency of the external clock is 20 MHz
When the main clock oscillator wait control register (MOSCWTCR) is set to 00h

Table 39.27 Timing of Recovery from Low Power Consumption Modes (2)

Conditions: 1.8 V ≤ VCC = AVCC0 ≤ 5.5 V, VSS = AVSS0 = VREFL0 = 0 V, T_a = –40 to +105°C

Item				Symbol	Min.	Typ.	Max.	Unit	Test Conditions
Recovery time from software standby mode*1	Middle-speed mode	Crystal connected to main clock oscillator	Main clock oscillator operating*2	t_{SBYMC}	—	2	3	ms	Figure 39.46
			Main clock oscillator and PLL circuit operating*3	t_{SBYPC}	—	2	3	ms	
		External clock input to main clock oscillator	Main clock oscillator operating*4	t_{SBYEX}	—	3	4	μs	
			Main clock oscillator and PLL circuit operating*5	t_{SBYPE}	—	65	85	μs	
		HOCO clock oscillator operating*6		t_{SBYHO}	—	40	50	μs	
		LOCO clock oscillator operating		t_{SBYLO}	—	5	7	μs	

Note 1. The recovery time varies depending on the state of each oscillator when the WAIT instruction is executed. When multiple oscillators are operating, the recovery time varies depending on the operating state of the oscillators that are not selected as the system clock source. The above table applies when only the corresponding clock is operating.

Note 2. When the frequency of the crystal is 12 MHz
When the main clock oscillator wait control register (MOSCWTCR) is set to 04h

Note 3. This is the case when PLL is selected as the system clock and its frequency division is set to be 12 MHz.
When the main clock oscillator wait control register (MOSCWTCR) is set to 04h

Note 4. When the frequency of the external clock is 12 MHz
When the main clock oscillator wait control register (MOSCWTCR) is set to 00h

Note 5. This is the case when PLL is selected as the system clock and its frequency division is set to be 12 MHz.
When the main clock oscillator wait control register (MOSCWTCR) is set to 00h

Note 6. This is the case when HOCO is selected as the system clock and its frequency division is set to be 8 MHz.

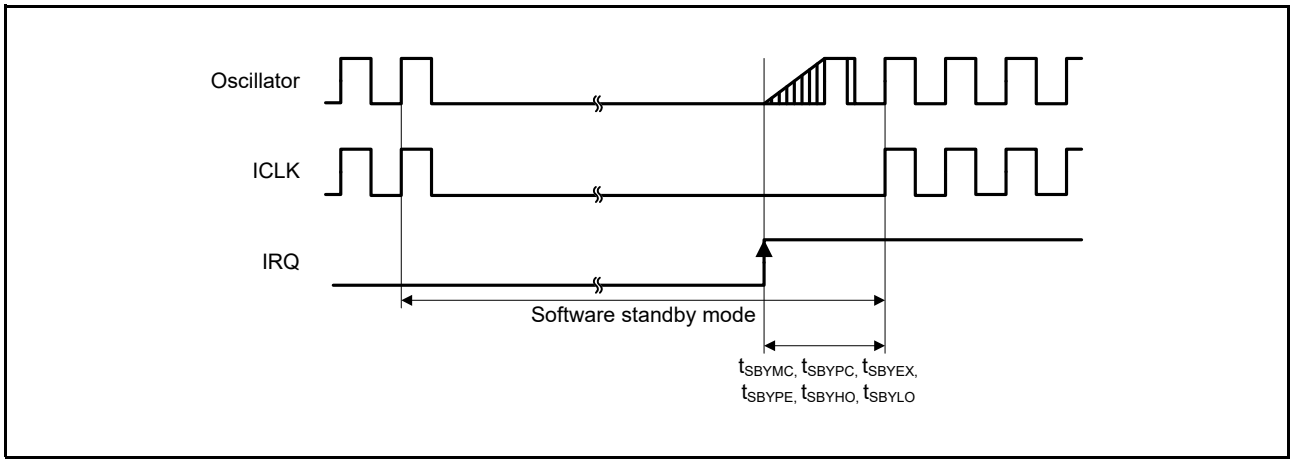

Figure 39.46 Software Standby Mode Recovery Timing

Table 39.28 Timing of Recovery from Low Power Consumption Modes (3)

Conditions: 1.8 V ≤ VCC = AVCC0 ≤ 5.5 V, VSS = AVSS0 = VREFL0 = 0 V, T_a = –40 to +105°C

Item		Symbol	Min.	Typ.	Max.	Unit	Test Conditions
Recovery time from deep sleep mode*1	High-speed mode*2	t_{DSLP}	—	2.0	3.5	μs	Figure 39.47
	Middle-speed mode*3	t_{DSLP}	—	3.0	4.0	μs	

Note 1. Oscillators continue oscillating in deep sleep mode.
Note 2. When the frequency of the system clock is 32 MHz
Note 3. When the frequency of the system clock is 12 MHz

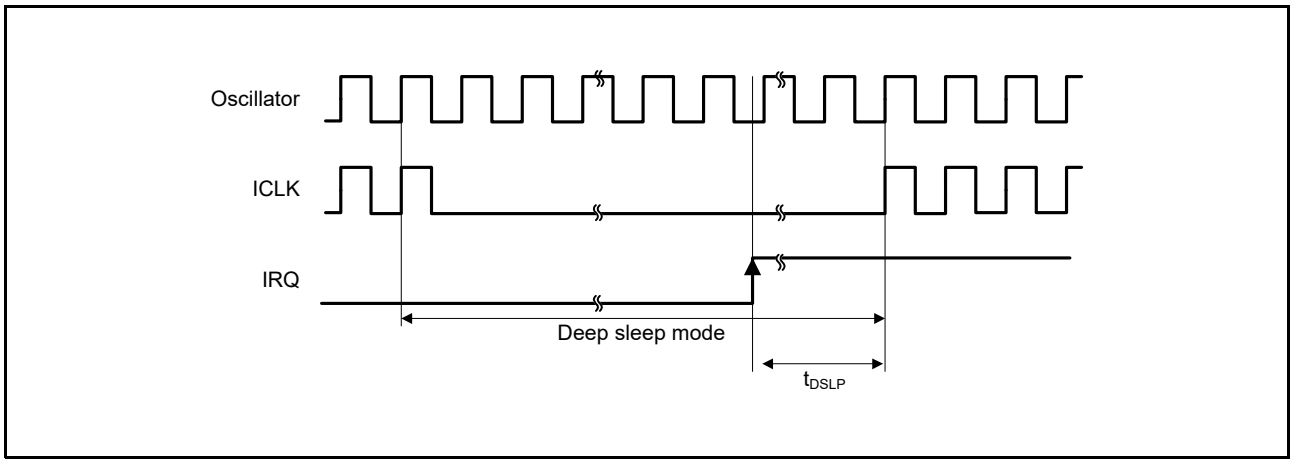

Figure 39.47 Deep Sleep Mode Recovery Timing

Table 39.29 Operating Mode Transition Time

Conditions: 1.8 V ≤ VCC = AVCC0 ≤ 5.5 V, VSS = AVSS0 = VREFL0 = 0 V, T_a = –40 to +105°C

Mode before Transition	Mode after Transition	ICLK Frequency	Transition Time			Unit
			Min.	Typ.	Max.	
High-speed operating mode	Middle-speed operating modes	8 MHz	—	10.0	—	μs
Middle-speed operating modes	High-speed operating mode	8 MHz	—	37.5	—	μs

Note: Values when the frequencies of PCLKA, PCLKB, PCLKD, and FCLK are not divided.

39.4.4 Control Signal Timing

Table 39.30 Control Signal Timing

Conditions: 1.8 V ≤ VCC = AVCC0 ≤ 5.5 V, VSS = AVSS0 = 0 V, T_a = –40 to +105°C

Item	Symbol	Min.	Typ.	Max.	Unit	Test Conditions	
NMI pulse width	t_{NMIW}	200	—	—	ns	NMI digital filter is disabled (NMIFLTE.NFLTEN = 0)	2 × t_{Pcyc} ≤ 200 ns
		2 × t_{Pcyc}*1	—	—			2 × t_{Pcyc} > 200 ns
		200	—	—		NMI digital filter is enabled (NMIFLTE.NFLTEN = 1)	3 × t_{NMICK} ≤ 200 ns
		3.5 × t_{NMICK}*2	—	—			3 × t_{NMICK} > 200 ns
IRQ pulse width	t_{IRQW}	200	—	—	ns	IRQ digital filter is disabled (IRQFLTE0.FLTENi = 0)	2 × t_{Pcyc} ≤ 200 ns
		2 × t_{Pcyc}*1	—	—			2 × t_{Pcyc} > 200 ns
		200	—	—		IRQ digital filter is enabled (IRQFLTE0.FLTENi = 1)	3 × t_{IRQCK} ≤ 200 ns
		3.5 × t_{IRQCK}*3	—	—			3 × t_{IRQCK} > 200 ns

Note: 200 ns minimum in software standby mode.
Note 1. t_{Pcyc} indicates the cycle of PCLKB.
Note 2. t_{NMICK} indicates the cycle of the NMI digital filter sampling clock.
Note 3. t_{IRQCK} indicates the cycle of the IRQi digital filter sampling clock (i = 0 to 7).

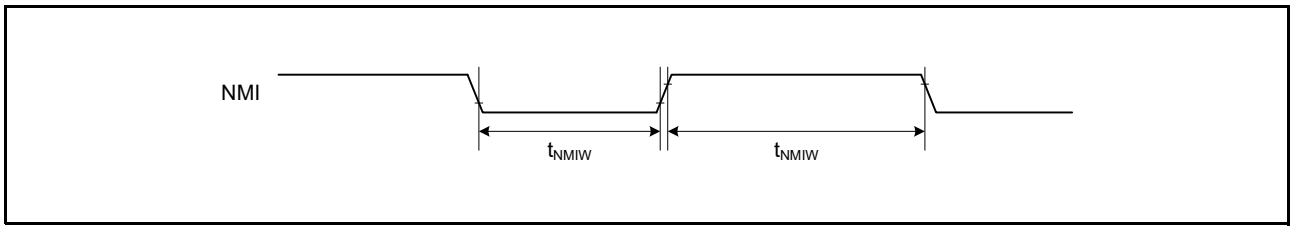

Figure 39.48 NMI Interrupt Input Timing

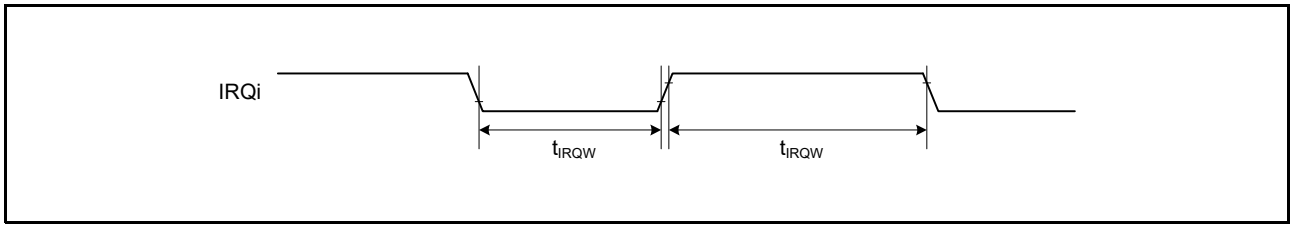

Figure 39.49 IRQ Interrupt Input Timing

39.4.5 Timing of On-Chip Peripheral Modules

39.4.5.1 I/O ports

Table 39.31 Timing of I/O ports

Conditions: 1.8 V ≤ VCC = AVCC0 ≤ 5.5 V, VSS = AVSS0 = 0 V, T_a = –40 to +105°C

Item		Symbol	Min.	Typ.	Max.	Unit*1	Test Conditions
I/O ports	Input data pulse width	t_{PRW}	1.5	—	—	t_{Pcyc}	Figure 39.50

Note 1. t_{Pcyc}: PCLK cycle

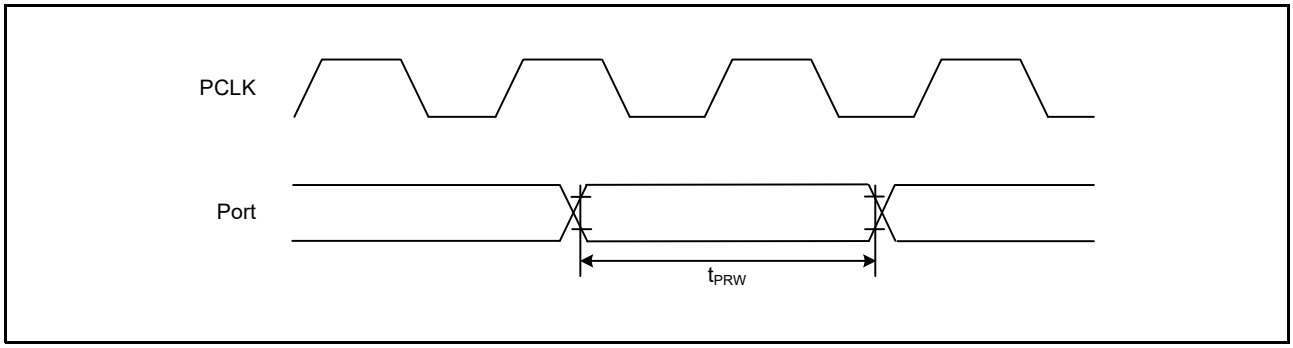

Figure 39.50 I/O Port Input Timing

39.4.5.2 MTU

Table 39.32 Timing of MTU

Conditions: 1.8 V ≤ VCC = AVCC0 ≤ 5.5 V, VSS = AVSS0 = 0 V, T_a = –40 to +105°C

Item			Symbol	Min.	Typ.	Max.	Unit*1	Test Conditions
MTU	Input capture input pulse width	Single-edge setting	t_{TICW}	1.5	—	—	t_{Pcyc}	Figure 39.51
		Both-edge setting		2.5	—	—		
	Input capture input rise/fall time		t_{TICr}, t_{TICf}	—	—	0.1	μs/V	
	Timer clock pulse width	Single-edge setting	t_{TCKWH}, t_{TCKWL}	1.5	—	—	t_{Pcyc}	Figure 39.52
		Both-edge setting		2.5	—	—		
		Phase counting mode		2.5	—	—		
	Timer clock rise/fall time		t_{TCKr}, t_{TCKf}	—	—	0.1	μs/V	

Note 1. t_{Pcyc}: PCLK cycle

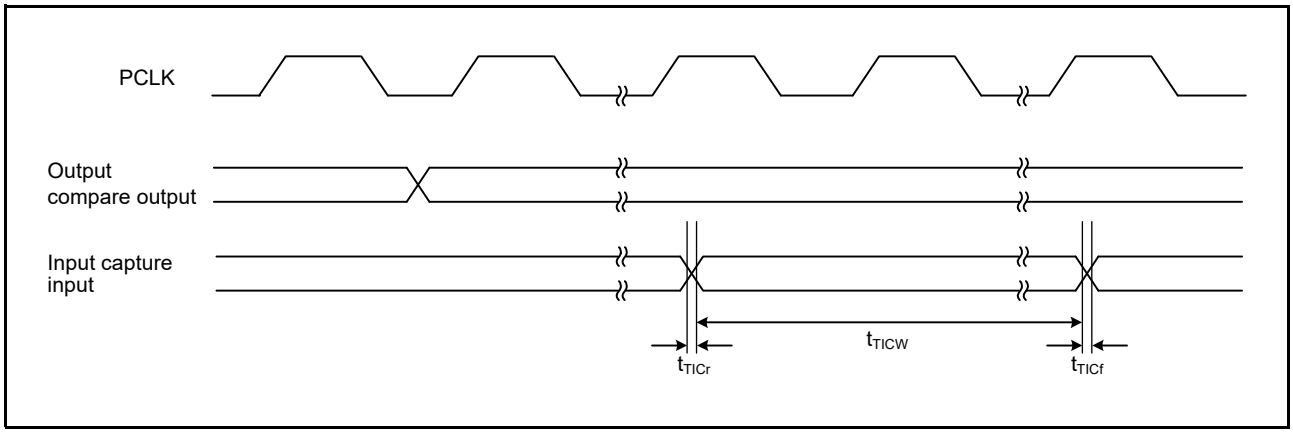

Figure 39.51 MTU Input/Output Timing

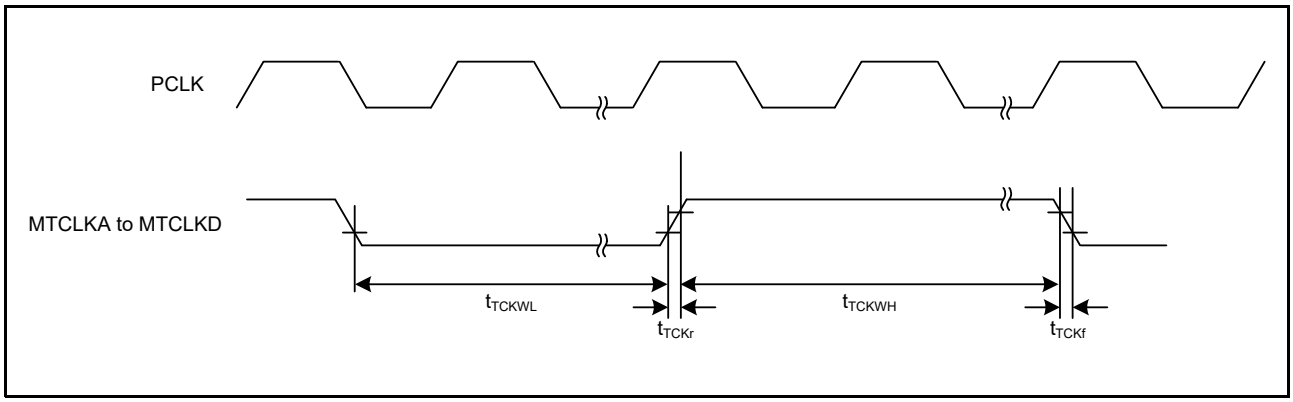

Figure 39.52 MTU Clock Input Timing

39.4.5.3 POE

Table 39.33 Timing of POE

Conditions: 1.8 V ≤ VCC = AVCC0 ≤ 5.5 V, VSS = AVSS0 = 0 V, T_a = –40 to +105°C

Item			Symbol	Min.	Typ.	Max.	Unit*1	Test Conditions
POE	POE# input pulse width		t_{POEW}	1.5	—	—	t_{Pcyc}	Figure 39.53
	POE# input rise/fall time		t_{POEr}, t_{POEf}	—	—	0.1	μs/V	
	Output disable time	Transition of the POE# signal level	t_{POEDI}	—	—	5 PCLKB + 0.24	μs	Figure 39.54 When detecting falling edges (ICSRm.POEnM[1:0] = 00 (m = 1, 2; n = 0 to 3, 8))
		Simultaneous conduction of output pins	t_{POEDO}	—	—	3 PCLKB + 0.2	μs	Figure 39.55
		Register setting	t_{POEDS}	—	—	1 PCLKB + 0.2	μs	Figure 39.56 Time for access to the register is not included.
		Oscillation stop detection	t_{POEDOS}	—	—	21	μs	Figure 39.57

Note 1. t_{Pcyc}: PCLK cycle

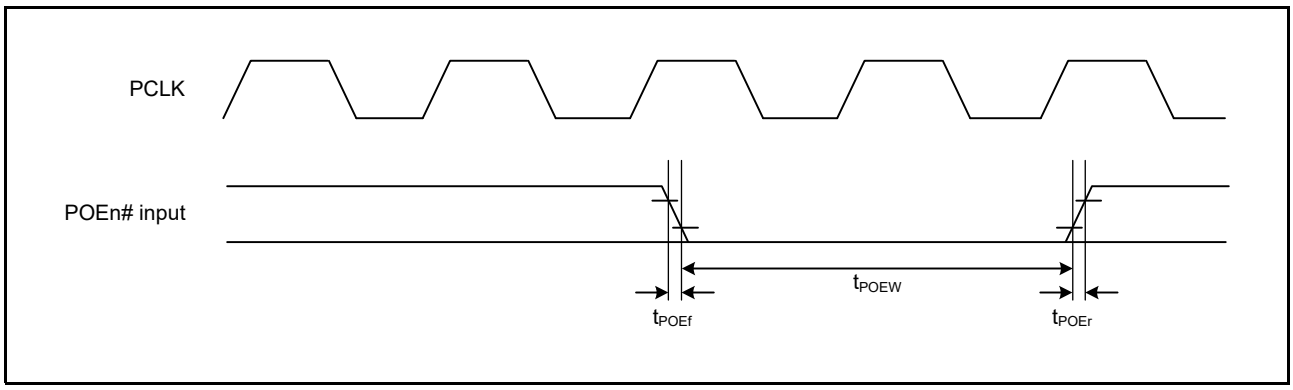

Figure 39.53 POE Input Timing (n = 0 to 3, 8)

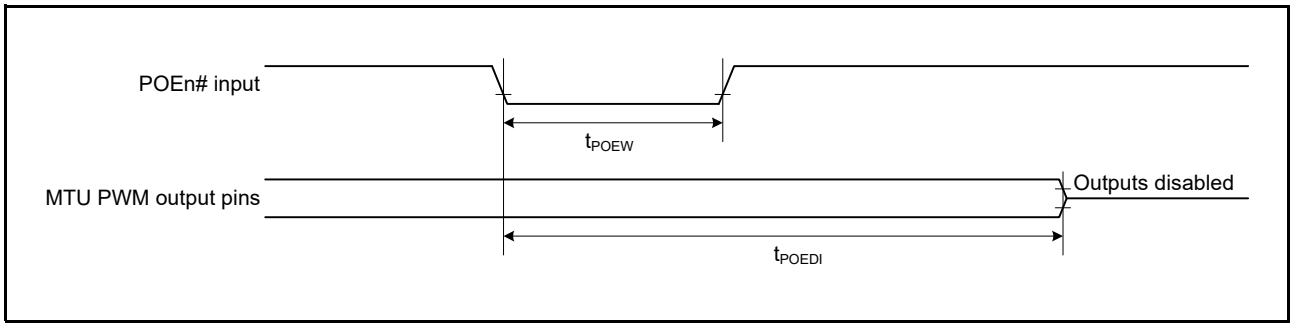

Figure 39.54 Output Disable Time for POE in Response to Transition of the POEn# Signal Level

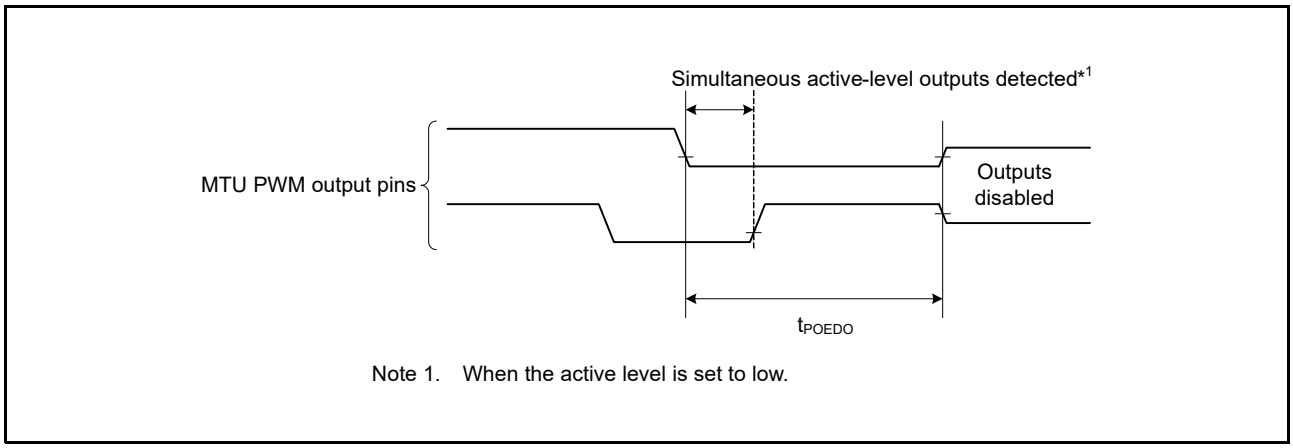

Figure 39.55 Output Disable Time for POE in Response to the Simultaneous Conduction of Output Pins

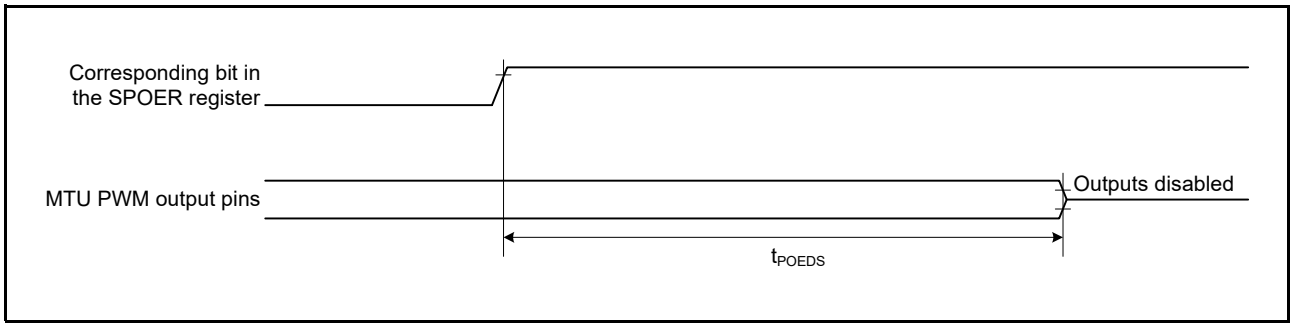

Figure 39.56 Output Disable Time for POE in Response to the Register Setting

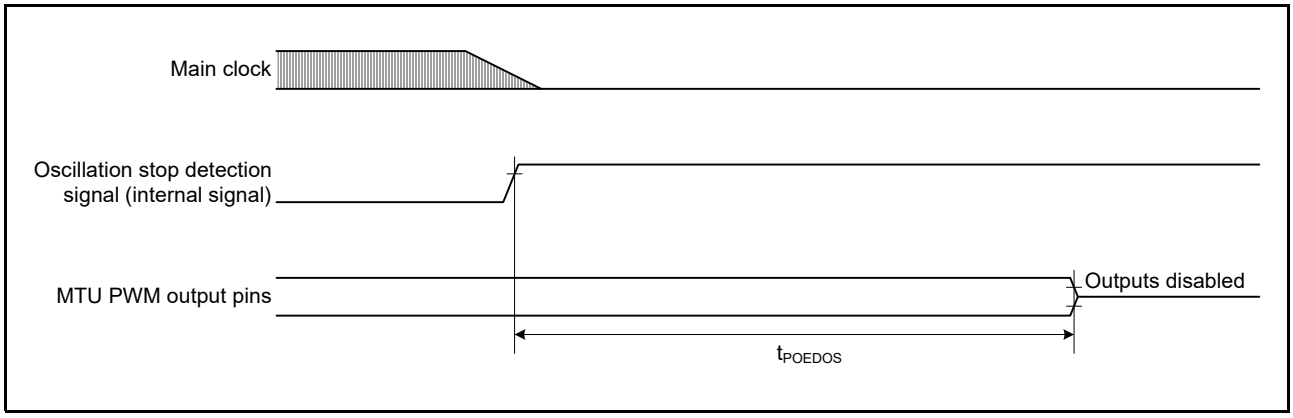

Figure 39.57 Output Disable Time for POE in Response to the Oscillation Stop Detection

39.4.5.4 TMR

Table 39.34 Timing of TMR

Conditions: 1.8 V ≤ VCC = AVCC0 ≤ 5.5 V, VSS = AVSS0 = 0 V, T_a = –40 to +105°C

Item			Symbol	Min.	Typ.	Max.	Unit*1	Test Conditions
TMR	Timer clock pulse width	Single-edge setting	t_{TMCWH}, t_{TMCWL}	1.5	—	—	t_{Pcyc}	Figure 39.58
		Both-edge setting		2.5	—	—		
	Timer clock rise/fall time		t_{TMCr}, t_{TMCf}	—	—	0.1	μs/V	

Note 1. t_{Pcyc}: PCLK cycle

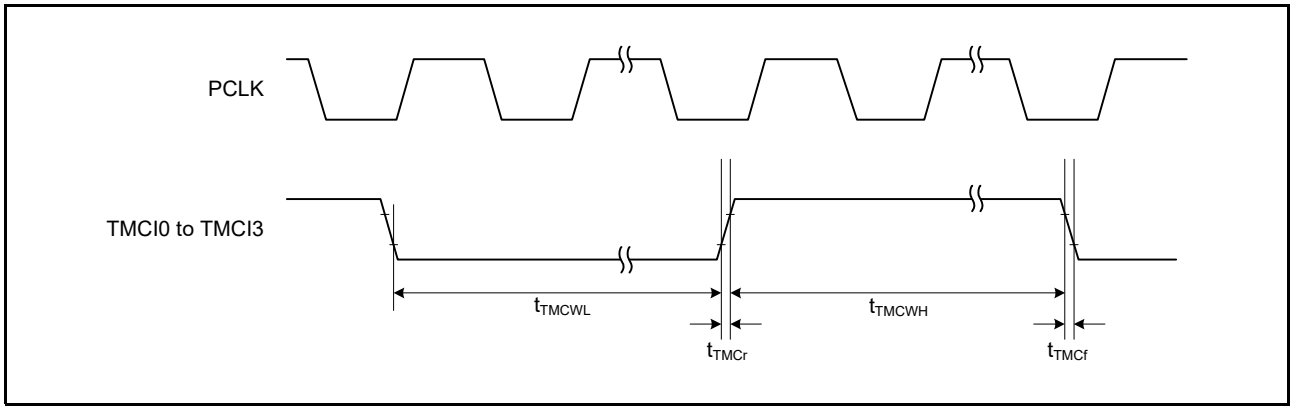

Figure 39.58 TMR Clock Input Timing

39.4.5.5 SCI

Table 39.35 Timing of SCI

Conditions: 1.8 V ≤ VCC = AVCC0 ≤ 5.5 V, VSS = AVSS0 = 0 V, T_a = –40 to +105°C

Item				Symbol	Min.	Typ.	Max.	Unit*1	Test Conditions
SCI	Input clock cycle time		Asynchronous	t_{Scyc}	4	—	—	t_{Pcyc}	Figure 39.59
			Clock synchronous		6	—	—		
	Input clock pulse width			t_{SCKW}	0.4	—	0.6	t_{Scyc}	
	Input clock rise time			t_{SCKr}	—	—	20	ns	
	Input clock fall time			t_{SCKf}	—	—	20	ns	
	Output clock cycle time		Asynchronous	t_{Scyc}	16	—	—	t_{Pcyc}	
			Clock synchronous		4	—	—		
	Output clock pulse width			t_{SCKW}	0.4	—	0.6	t_{Scyc}	
	Output clock rise time			t_{SCKr}	—	—	20	ns	
	Output clock fall time			t_{SCKf}	—	—	20	ns	
	Transmit data delay time (master)	Clock synchronous		t_{TXD}	—	—	40	ns	Figure 39.60
	Transmit data delay time (slave)	Clock synchronous	VCC ≥ 2.7 V		—	—	65	ns	
			VCC < 2.7 V		—	—	100	ns	
	Receive data setup time (master)	Clock synchronous	VCC ≥ 2.7 V	t_{RXS}	65	—	—	ns	
			VCC < 2.7 V		90	—	—	ns	
	Receive data setup time (slave)	Clock synchronous			40	—	—	ns	
	Receive data hold time	Clock synchronous		t_{RXH}	40	—	—	ns	

Note 1. t_{Pcyc}: PCLK cycle

Table 39.36 Timing of Simple I²C

Conditions: 2.7 V ≤ VCC = AVCC0 ≤ 5.5 V, VSS = AVSS0 = 0 V, T_a = –40 to +105°C

Item		Symbol	Min.*1	Max.	Unit	Test Conditions
Simple I²C (Standard mode)	SDA rise time	t_{Sr}	—	1000	ns	Figure 39.61
	SDA fall time	t_{Sf}	—	300	ns	
	SDA spike pulse removal time	t_{SP}	0	4 × t_{Pcyc}	ns	
	Data setup time	t_{SDAS}	250	—	ns	
	Data hold time	t_{SDAH}	0	—	ns	
	SCL, SDA capacitive load	C_b	—	400	pF	
Simple I²C (Fast mode)	SDA rise time	t_{Sr}	—	300	ns	Figure 39.61
	SDA fall time	t_{Sf}	—	300	ns	
	SDA spike pulse removal time	t_{SP}	0	4 × t_{Pcyc}	ns	
	Data setup time	t_{SDAS}	100	—	ns	
	Data hold time	t_{SDAH}	0	—	ns	
	SCL, SDA capacitive load	C_b	—	400	pF	

Note: t_{Pcyc}: PCLK cycle

Note 1. C_b is the total capacitance of the bus lines.

Table 39.37 Timing of Simple SPI

Conditions: 1.8 V ≤ VCC = AVCC0 ≤ 5.5 V, VSS = AVSS0 = 0 V, T_a = –40 to +105°C

Item			Symbol	Min.	Max.	Unit*1	Test Conditions
Simple SPI	SCK clock cycle output (master)		t_{SPcyc}	4	65536	t_{Pcyc}	Figure 39.62
	SCK clock cycle input (slave)			6	—	t_{Pcyc}	
	SCK clock high pulse width		t_{SPCKWH}	0.4	0.6	t_{SPcyc}	
	SCK clock low pulse width		t_{SPCKWL}	0.4	0.6	t_{SPcyc}	
	SCK clock rise/fall time		t_{SPCKr}, t_{SPCKf}	—	20	ns	
	Data input setup time (master)	VCC ≥ 2.7 V	t_{SU}	65	—	ns	Figure 39.63, Figure 39.64
		VCC < 2.7 V		95	—		
	Data input setup time (slave)			40	—		
	Data input hold time		t_H	40	—	ns	
	SSL input setup time		t_{LEAD}	3	—	t_{SPcyc}	
	SSL input hold time		t_{LAG}	3	—	t_{SPcyc}	
	Data output delay time (master)		t_{OD}	—	40	ns	
	Data output delay time (slave)	VCC ≥ 2.7 V		—	65		
		VCC < 2.7 V		—	100		
	Data output hold time (master)	VCC ≥ 2.7 V	t_{OH}	–10	—	ns	
		VCC < 2.7 V		–20	—		
	Data output hold time (slave)			–10	—		
	Data rise/fall time		t_{Dr}, t_{Df}	—	20	ns	
	SSL input rise/fall time		t_{SSLr}, t_{SSLf}	—	20	ns	
	Slave access time		t_{SA}	—	6	t_{Pcyc}	Figure 39.65, Figure 39.66
	Slave output release time		t_{REL}	—	6	t_{Pcyc}	

Note 1. t_{Pcyc}: PCLK cycle

39.4.5.6 RIIC

Table 39.38 Timing of RIIC

Conditions: 2.7 V ≤ VCC = AVCC0 ≤ 5.5 V, VSS = AVSS0 = 0 V, T_a = –40 to +105°C

Item		Symbol	Min.*1, *2	Max.	Unit	Test Conditions
RIIC (Standard mode, SMBus)	SCL cycle time	t_{SCL}	6 (12) × t_{IICcyc} + 1300	—	ns	Figure 39.61
	SCL high pulse width	t_{SCLH}	3 (6) × t_{IICcyc} + 300	—	ns	
	SCL low pulse width	t_{SCLL}	3 (6) × t_{IICcyc} + 300	—	ns	
	SCL, SDA rise time	t_{Sr}	—	1000	ns	
	SCL, SDA fall time	t_{Sf}	—	300	ns	
	SCL, SDA spike pulse removal time	t_{SP}	0	1 (4) × t_{IICcyc}	ns	
	SDA bus free time	t_{BUF}	3 (6) × t_{IICcyc} + 300	—	ns	
	START condition hold time	t_{STAH}	t_{IICcyc} + 300	—	ns	
	RESTART condition setup time	t_{STAS}	1000	—	ns	
	STOP condition setup time	t_{STOS}	1000	—	ns	
	Data setup time	t_{SDAS}	t_{IICcyc} + 50	—	ns	
	Data hold time	t_{SDAH}	0	—	ns	
	SCL, SDA capacitive load	C_b	—	400	pF	
RIIC (Fast mode)	SCL cycle time	t_{SCL}	6 (12) × t_{IICcyc} + 600	—	ns	Figure 39.61
	SCL high pulse width	t_{SCLH}	3 (6) × t_{IICcyc} + 300	—	ns	
	SCL low pulse width	t_{SCLL}	3 (6) × t_{IICcyc} + 300	—	ns	
	SCL, SDA rise time	t_{Sr}	—	300	ns	
	SCL, SDA fall time	t_{Sf}	—	300	ns	
	SCL, SDA spike pulse removal time	t_{SP}	0	1 (4) × t_{IICcyc}	ns	
	SDA bus free time	t_{BUF}	3 (6) × t_{IICcyc} + 300	—	ns	
	START condition hold time	t_{STAH}	t_{IICcyc} + 300	—	ns	
	RESTART condition setup time	t_{STAS}	300	—	ns	
	STOP condition setup time	t_{STOS}	300	—	ns	
	Data setup time	t_{SDAS}	t_{IICcyc} + 50	—	ns	
	Data hold time	t_{SDAH}	0	—	ns	
	SCL, SDA capacitive load	C_b	—	400	pF	

Note: t_{IICcyc}: RIIC internal reference clock (IICφ) cycle

Note 1. The value in parentheses is used when the ICMR3.NF[1:0] bits are set to 11b while a digital filter is enabled with the ICFER.NFE bit = 1.

Note 2. C_b is the total capacitance of the bus lines.

39.4.5.7 RSPI

Table 39.39 Timing of RSPI

Conditions: 1.8 V ≤ VCC = AVCC0 ≤ 5.5 V, VSS = AVSS0 = 0 V, T_a = –40 to +105°C, C = 30 pF, when high-drive output is selected by the drive capacity control register

Item				Symbol	Min.	Max.	Unit*1	Test Conditions
RSPI	RSPCK clock cycle	Master		t_{SPcyc}	2	4096	t_{Pcyc}	Figure 39.62
		Slave			6	—		
	RSPCK clock high pulse width	Master		t_{SPCKWH}	$(t_{SPcyc} - t_{SPCKr} - t_{SPCKf})/2 - 3$	—	ns	
		Slave			$(t_{SPcyc} - t_{SPCKr} - t_{SPCKf})/2$	—		
	RSPCK clock low pulse width	Master		t_{SPCKWL}	$(t_{SPcyc} - t_{SPCKr} - t_{SPCKf})/2 - 3$	—	ns	
		Slave			$(t_{SPcyc} - t_{SPCKr} - t_{SPCKf})/2$	—		
	RSPCK clock rise/fall time	Output	VCC ≥ 2.7 V	t_{SPCKr}, t_{SPCKf}	—	10	ns	
			VCC < 2.7 V		—	15		
		Input			—	0.1	μs/V	
	Data input setup time	Master	VCC ≥ 2.7 V	t_{SU}	10	—	ns	Figure 39.63 to Figure 39.66
			VCC < 2.7 V		30	—		
		Slave			25	—		
	Data input hold time	Master	RSPCK set to a division ratio other than PCLKB divided by 2	t_H	t_{Pcyc}	—	ns	
			RSPCK set to PCLKB divided by 2	t_{HF}	0	—		
		Slave		t_H	20	—		
	SSL setup time	Master		t_{LEAD}	–30 + N*2 × t_{SPcyc}	—	ns	
		Slave			6	—	t_{Pcyc}	
	SSL hold time	Master		t_{LAG}	–30 + N*3 × t_{SPcyc}	—	ns	
		Slave			6	—	t_{Pcyc}	
	Data output delay time	Master	VCC ≥ 2.7 V	t_{OD}	—	14	ns	
			VCC < 2.7 V		—	30		
		Slave	VCC ≥ 2.7 V		—	65		
			VCC < 2.7 V		—	105		
	Data output hold time	Master		t_{OH}	0	—	ns	
		Slave			0	—		
	Successive transmission delay time	Master		t_{TD}	$t_{SPcyc} + 2 \times t_{Pcyc}$	$8 \times t_{SPcyc} + 2 \times t_{Pcyc}$	ns	
		Slave			$6 \times t_{Pcyc}$	—		
	MOSI and MISO rise/fall time	Output	VCC ≥ 2.7 V	t_{Dr}, t_{Df}	—	10	ns	
			VCC < 2.7 V		—	15		
		Input			—	1	μs	
	SSL rise/fall time	Output	VCC ≥ 2.7 V	t_{SSLr}, t_{SSLf}	—	10	ns	
			VCC < 2.7 V		—	15	ns	
		Input			—	1	μs	
	Slave access time		VCC ≥ 2.7 V	t_{SA}	—	6	t_{Pcyc}	Figure 39.65, Figure 39.66
			VCC < 2.7 V		—	7		
	Slave output release time		VCC ≥ 2.7 V	t_{REL}	—	5	t_{Pcyc}	
			VCC < 2.7 V		—	6		

Note 1. t_{Pcyc}: PCLK cycle
Note 2. N: An integer from 1 to 8 that can be set by the RSPI clock delay register (SPCKD)

Note 3. N: An integer from 1 to 8 that can be set by the RSPI slave select negation delay register (SSLND)

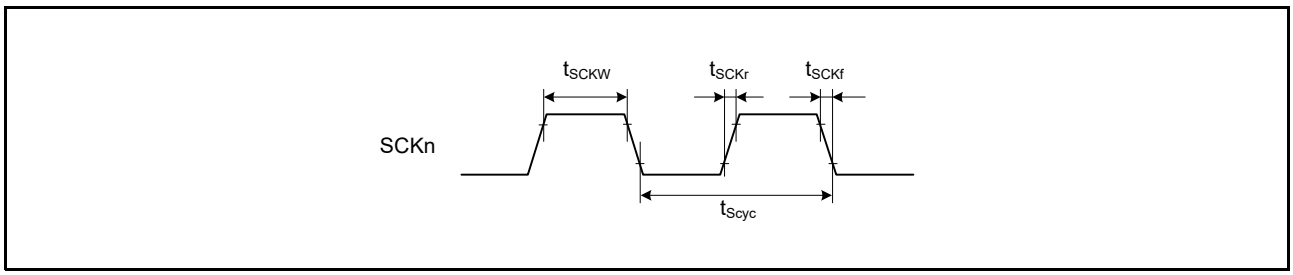

Figure 39.59 SCK Clock Input Timing (n = 1, 5, 6, 12)

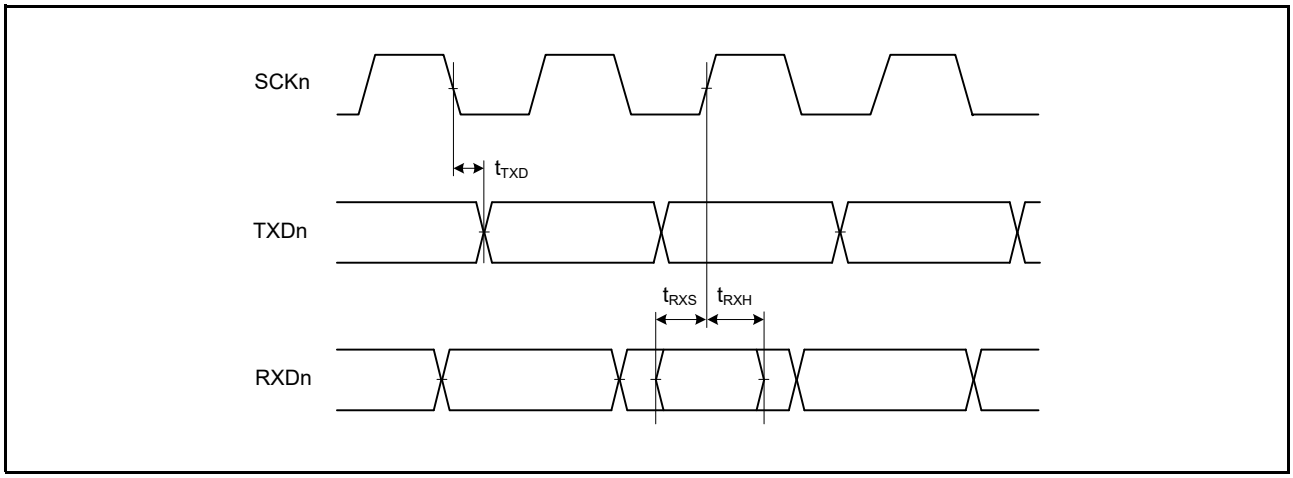

Figure 39.60 SCI Input/Output Timing: Clock Synchronous Mode (n = 1, 5, 6, 12)

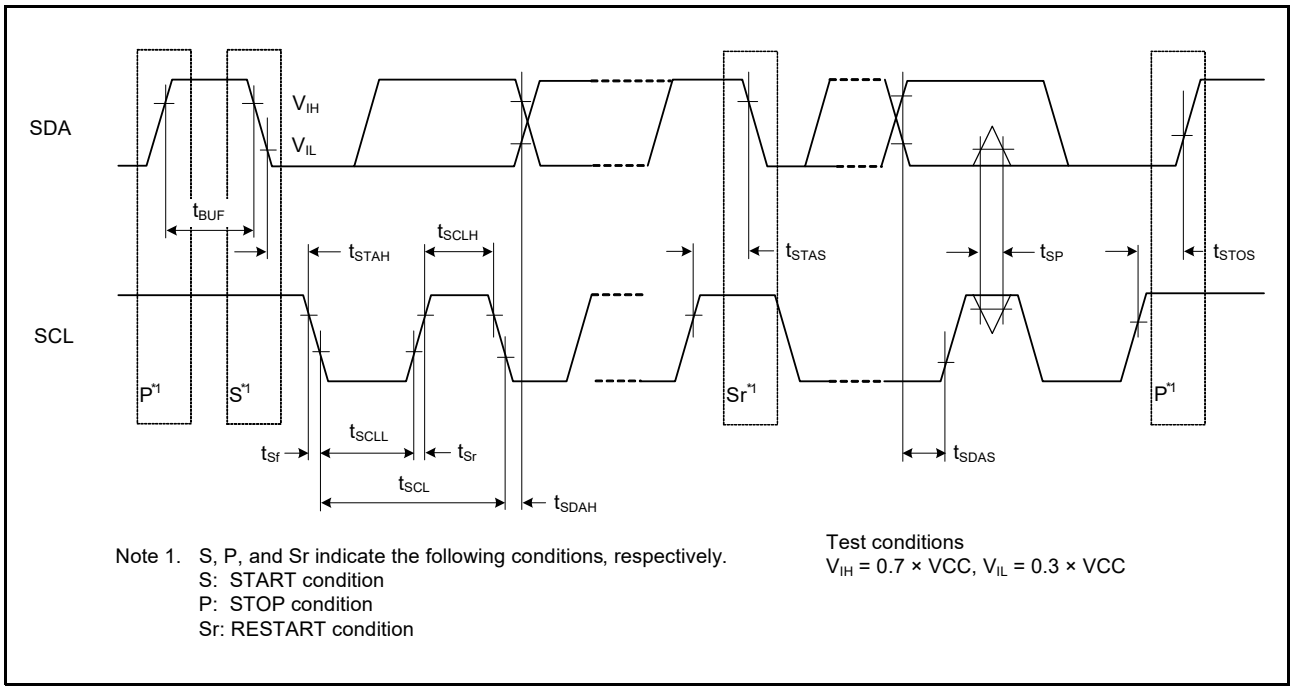

Figure 39.61 RIIC Bus Interface Input/Output Timing and Simple I²C Bus Interface Input/Output Timing

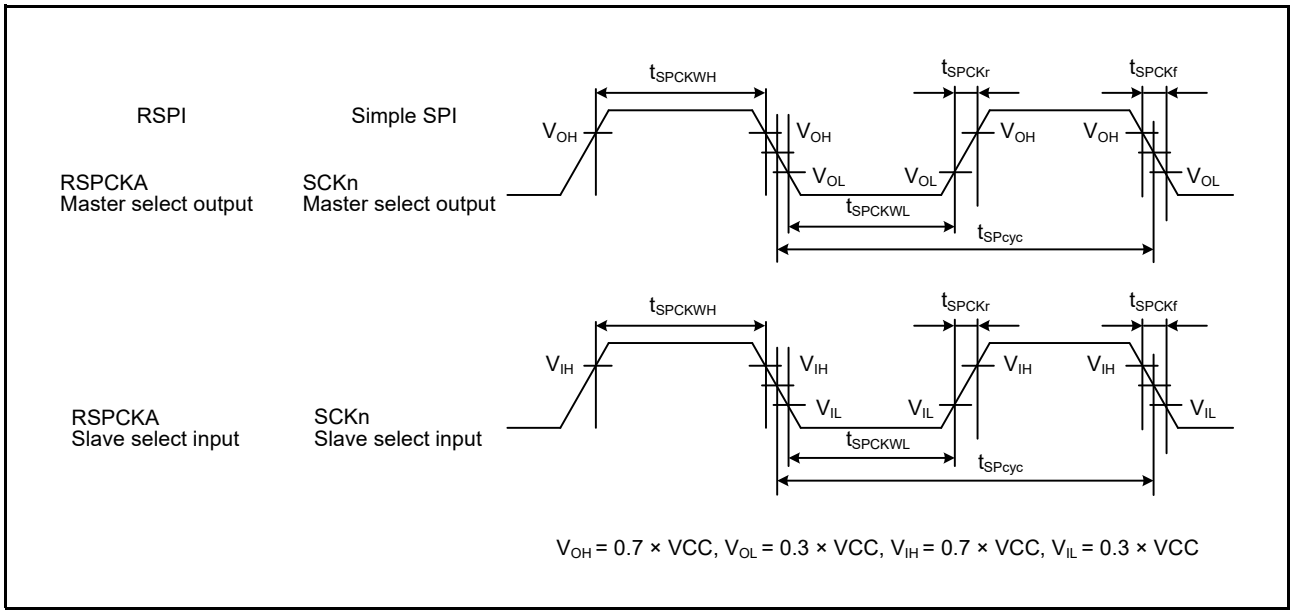

Figure 39.62 RSPI Clock Timing and Simple SPI Clock Timing (n = 1, 5, 6, 12)

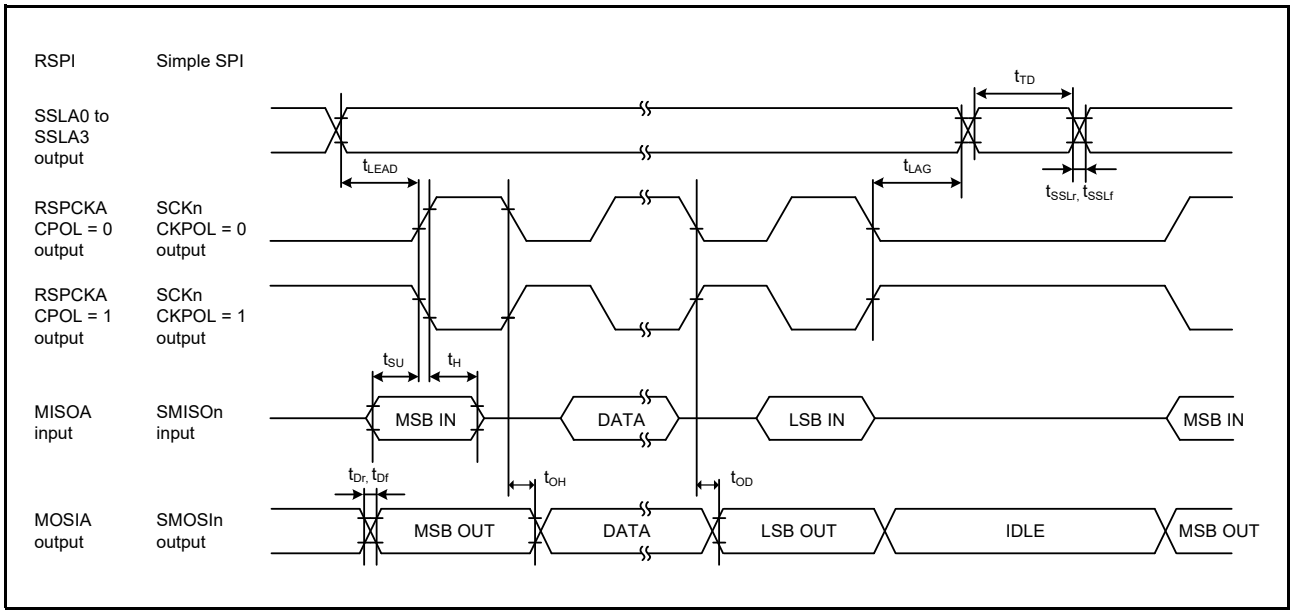

Figure 39.63 RSPI Timing (Master, CPHA = 0) and Simple SPI Clock Timing (Master, CKPH = 1) (n = 1, 5, 6, 12)

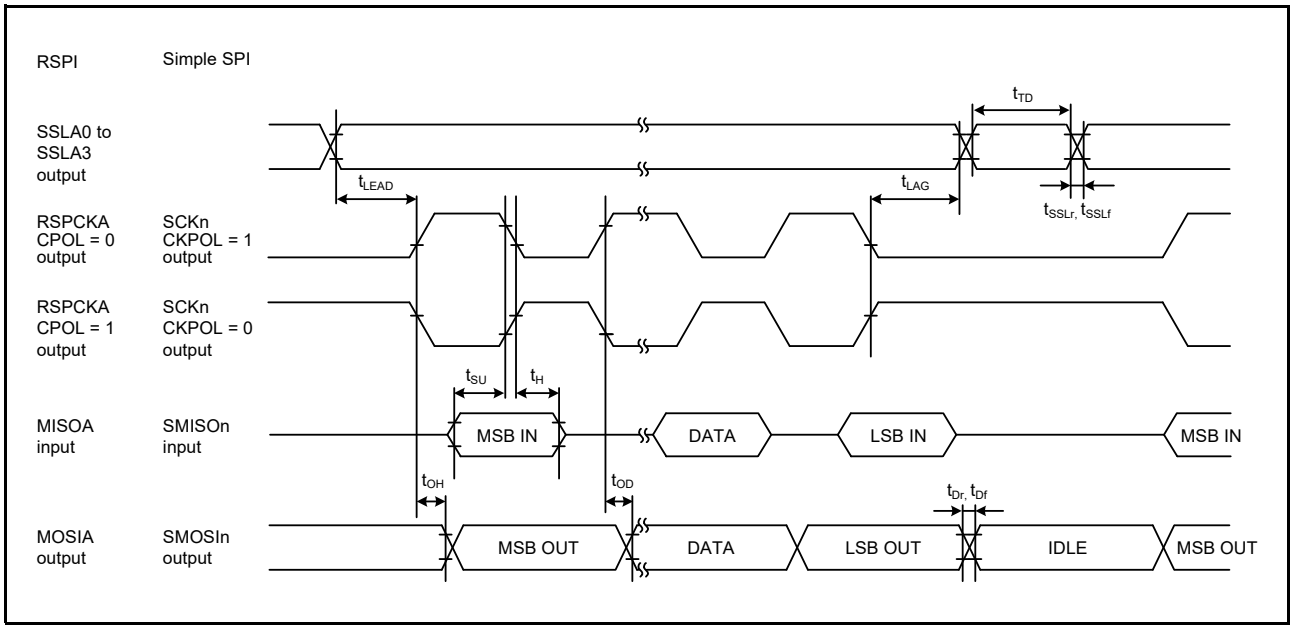

Figure 39.64 RSPI Timing (Master, CPHA = 1) and Simple SPI Clock Timing (Master, CKPH = 0) (n = 1, 5, 6, 12)

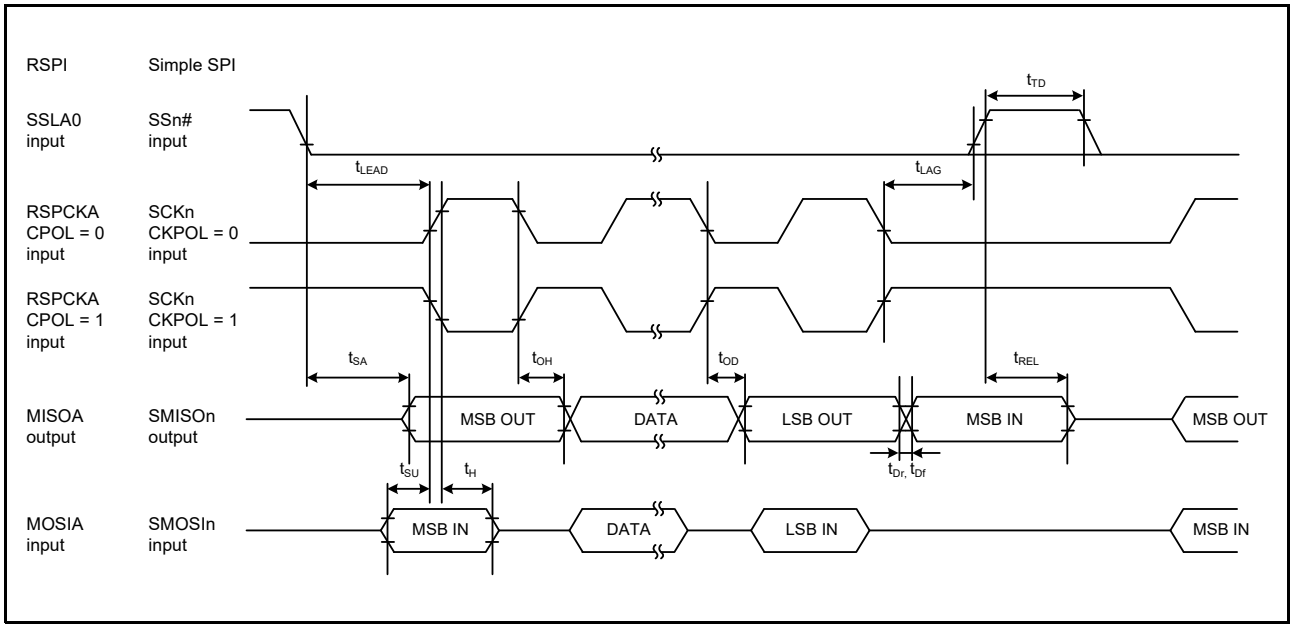

Figure 39.65 RSPI Timing (Slave, CPHA = 0) and Simple SPI Clock Timing (Slave, CKPH = 1) (n = 1, 5, 6, 12)

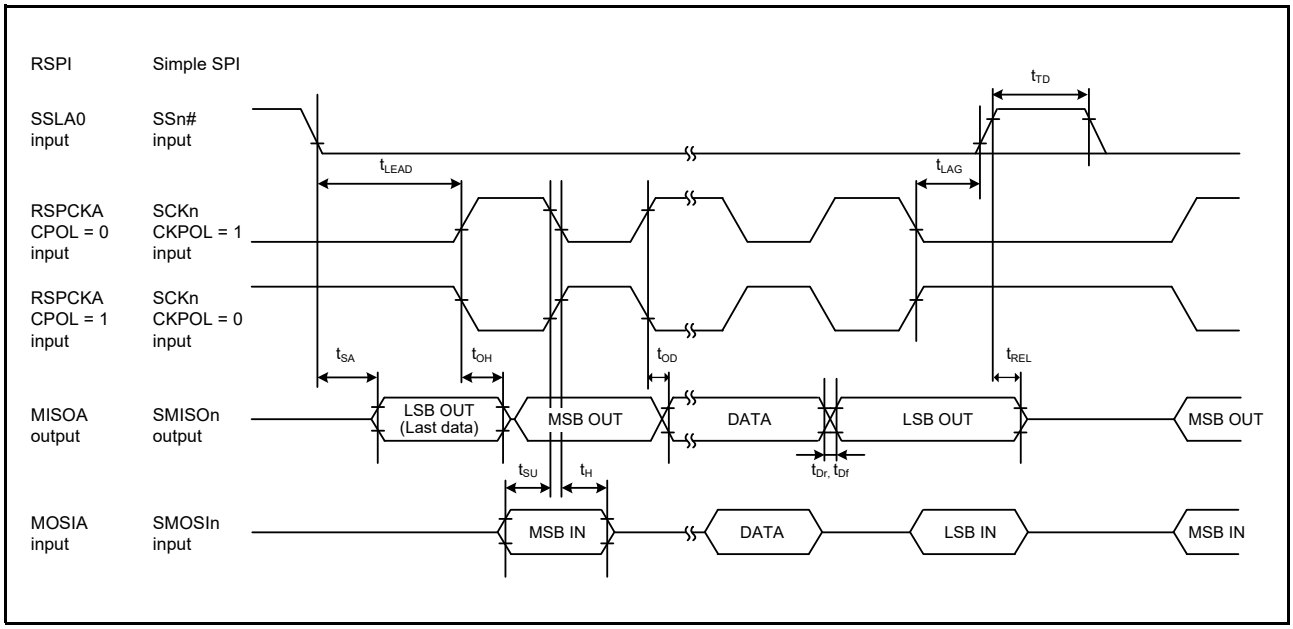

Figure 39.66 RSPI Timing (Slave, CPHA = 1) and Simple SPI Clock Timing (Slave, CKPH = 0) (n = 1, 5, 6, 12)

39.4.5.8 A/D converter Trigger

Table 39.40 Timing of A/D converter Trigger)

Conditions: 1.8 V ≤ VCC = AVCC0 ≤ 5.5 V, VSS = AVSS0 = 0 V, T_a = –40 to +105°C

Item		Symbol	Min.	Typ.	Max.	Unit*1	Test Conditions
A/D converter	Trigger input pulse width	t_{TRGW}	1.5	—	—	t_{Pcyc}	Figure 39.67

Note 1. t_{Pcyc}: PCLK cycle

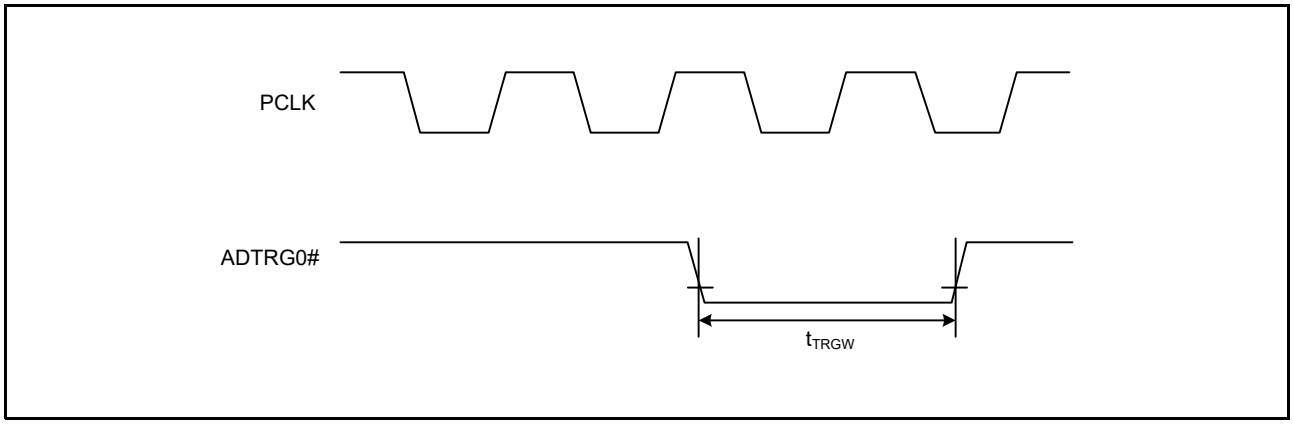

Figure 39.67 A/D Converter External Trigger Input Timing

39.4.5.9 CAC

Table 39.41 Timing of CAC

Conditions: 1.8 V ≤ VCC = AVCC0 ≤ 5.5 V, VSS = AVSS0 = 0 V, T_a = –40 to +105°C

Item			Symbol	Min.	Typ.	Max.	Unit*1	Test Conditions
CAC	CACREF input pulse width	$t_{Pcyc} \le t_{cac}$*2	t_{CACREF}	4.5 t_{cac} + 3 t_{Pcyc}	—	—	ns	
		$t_{Pcyc} > t_{cac}$*2		5 t_{cac} + 6.5 t_{Pcyc}	—			
	CACREF input rise/fall time		$t_{CACREFr}$, $t_{CACREFf}$	—	—	0.1	μs/V	

Note 1. t_{Pcyc}: PCLK cycle
Note 2. t_{cac}: CAC count clock source cycle

39.4.5.10 CLKOUT

Table 39.42 Timing of CLKOUT

Conditions: 1.8 V ≤ VCC = AVCC0 ≤ 5.5 V, VSS = AVSS0 = 0 V, T_a = –40 to +105°C

Item			Symbol	Min.	Typ.	Max.	Unit*1	Test Conditions
CLKOUT	CLKOUT pin output cycle*3	VCC ≥ 2.7 V	t_{Ccyc}	62.5	—	—	ns	Figure 39.68
		VCC < 2.7 V		125	—			
	CLKOUT pin high pulse width*2	VCC ≥ 2.7 V	t_{CH}	15	—	—	ns	
		VCC < 2.7 V		30	—			
	CLKOUT pin low pulse width*2	VCC ≥ 2.7 V	t_{CL}	15	—	—	ns	
		VCC < 2.7 V		30	—			
	CLKOUT pin output rise time	VCC ≥ 2.7 V	t_{Cr}	—	—	12	ns	
		VCC < 2.7 V			—	25		
	CLKOUT pin output fall time	VCC ≥ 2.7 V	t_{Cf}	—	—	12	ns	
		VCC < 2.7 V			—	25		

Note 1. t_{Pcyc}: PCLK cycle
Note 2. When the LOCO is selected as the clock output source (the CKOCR.CKOSEL[2:0] bits are 000b), set the clock output division ratio selection to divided by 2 (the CKOCR.CKODIV[2:0] bits are 001b).
Note 3. When the EXTAL external clock input or an oscillator is used with divided by 1 (the CKOCR.CKOSEL[2:0] bits are 010b and the CKOCR.CKODIV[2:0] bits are 000b) to output from CLKOUT, the above should be satisfied with an input duty cycle of 45 to 55%.

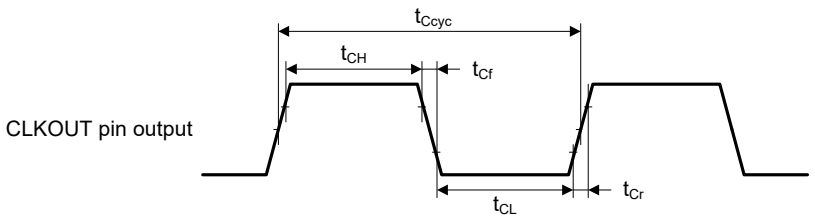

Test conditions: V_{OH} = 0.7 × VCC, V_{OL} = 0.3 × VCC, I_{OH} = -1.0 mA, I_{OL} = 1.0 mA, C = 30 pF

Figure 39.68 CLKOUT Output Timing

39.5 Characteristics of Power-On Reset Circuit and Voltage Detection Circuit

Table 39.43 Characteristics of Power-On Reset Circuit and Voltage Detection Circuit (1)

Conditions: 1.8 V ≤ VCC = AVCC0 ≤ 5.5 V, VSS = AVSS0 = 0 V, T_a = –40 to +105°C

Item		Symbol	Min.	Typ.	Max.	Unit	Test Conditions
Voltage detection level	Power-on reset (POR)	V_{POR}	1.35	1.50	1.65	V	Figure 39.69, Figure 39.70
	Voltage detection circuit (LVD0)*1	V_{det0_0}	3.67	3.84	3.97	V	Figure 39.71 At falling edge VCC
		V_{det0_1}	2.70	2.82	3.00		
		V_{det0_2}	2.37	2.51	2.67		
		V_{det0_3}	1.80	1.90	1.99		
	Voltage detection circuit (LVD1)*2	V_{det1_0}	4.12	4.29	4.42	V	Figure 39.72 At falling edge VCC
		V_{det1_1}	3.98	4.14	4.28		
		V_{det1_2}	3.86	4.02	4.16		
		V_{det1_3}	3.68	3.84	3.98		
		V_{det1_4}	2.99	3.10	3.29		
		V_{det1_5}	2.89	3.00	3.19		
		V_{det1_6}	2.79	2.90	3.09		
		V_{det1_7}	2.68	2.79	2.98		
		V_{det1_8}	2.57	2.68	2.87		
		V_{det1_9}	2.47	2.58	2.67		
		V_{det1_A}	2.37	2.48	2.57		
		V_{det1_B}	2.10	2.20	2.30		
		V_{det1_C}	1.86	1.96	2.06		
		V_{det1_D}	1.80	1.86	1.96		
	Voltage detection circuit (LVD2)*3	V_{det2_0}	4.08	4.29	4.48	V	Figure 39.73 At falling edge VCC
		V_{det2_1}	3.95	4.14	4.35		
		V_{det2_2}	3.82	4.02	4.22		
		V_{det2_3}	3.62	3.84	4.02		

Note: These characteristics apply when noise is not superimposed on the power supply. When a setting is made so that the voltage detection level overlaps with that of the voltage detection circuit (LVD2), it cannot be specified which of LVD1 and LVD2 is used for voltage detection.

Note 1. n in the symbol Vdet0_n denotes the value of the OFS1.VDSEL[1:0] bits.

Note 2. n in the symbol Vdet1_n denotes the value of the LVDLVLR.LVD1LVL[3:0] bits.

Note 3. n in the symbol Vdet2_n denotes the value of the LVDLVLR.LVD2LVL[1:0] bits.

Table 39.44 Characteristics of Power-On Reset Circuit and Voltage Detection Circuit (2)

Conditions: 1.8 V ≤ VCC = AVCC0 ≤ 5.5 V, VSS = AVSS0 = 0 V, T_a = –40 to +105°C

Item		Symbol	Min.	Typ.	Max.	Unit	Test Conditions
Wait time after release from the power-on reset	At normal startup	t_{POR}	—	9.1	—	ms	Figure 39.70
	During fast startup time	t_{POR}	—	1.6	—		
Wait time after release from voltage monitoring 0 reset		t_{LVD0}	—	600	—	μs	Figure 39.71
Wait time after release from voltage monitoring 1 reset		t_{LVD1}	—	150	—	μs	Figure 39.72
Wait time after release from voltage monitoring 2 reset		t_{LVD2}	—	150	—	μs	Figure 39.73
Response delay time		t_{det}	—	—	350	μs	Figure 39.69
Minimum VCC down time*1		t_{VOFF}	350	—	—	μs	Figure 39.69, VCC = 1.0 V or above
Power-on reset enable time		$t_{W(POR)}$	1	—	—	ms	Figure 39.70, VCC = below 1.0 V
LVD operation stabilization time (after LVD is enabled)		$Td_{(E-A)}$	—	—	300	μs	Figure 39.72, Figure 39.73
Hysteresis width (power-on rest (POR))		V_{PORH}	—	110	—	mV	
Hysteresis width (voltage detection circuit: LVD0, LVD1 and LVD2)		V_{LVH}	—	70	—	mV	When Vdet1_0 to Vdet1_4 is selected
			—	60	—		When Vdet1_5 to Vdet1_9 is selected
			—	50	—		When Vdet1_A or Vdet1_B is selected
			—	40	—		When Vdet1_C or Vdet1_D is selected
			—	60	—		When LVD0 or LVD2 is selected

Note: These characteristics apply when noise is not superimposed on the power supply. When a setting is made so that the voltage detection level overlaps with that of the voltage detection circuit (LVD1), it cannot be specified which of LVD1 and LVD2 is used for voltage detection.

Note 1. The minimum VCC down time indicates the time when VCC is below the minimum value of voltage detection levels V_{POR}, V_{det0}, V_{det1}, and V_{det2} for the POR/LVD.

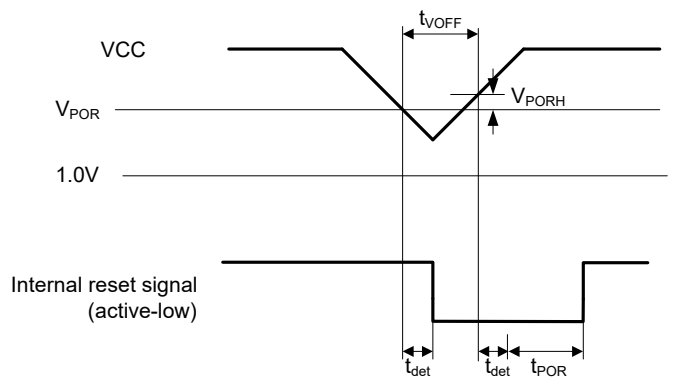

Figure 39.69 Voltage Detection Reset Timing

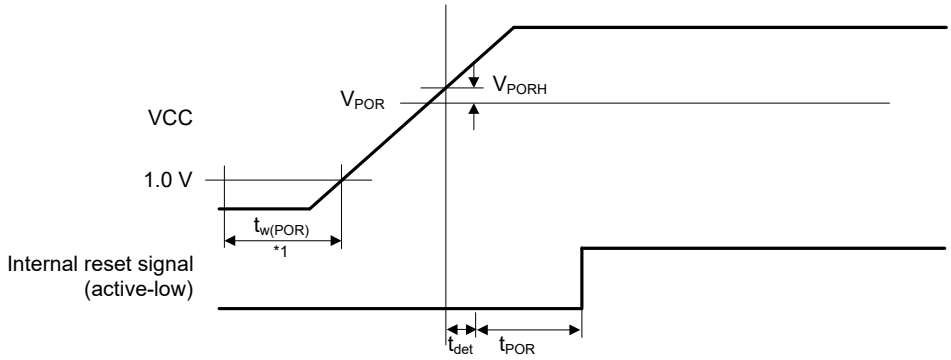

Note 1. $t_{w(POR)}$ is the time required for a power-on reset to be enabled while the external power VCC is being held below the valid voltage (1.0 V).
When turning the VCC on, maintain a voltage below 1.0V for at least 1.0ms.

Figure 39.70 Power-On Reset Timing

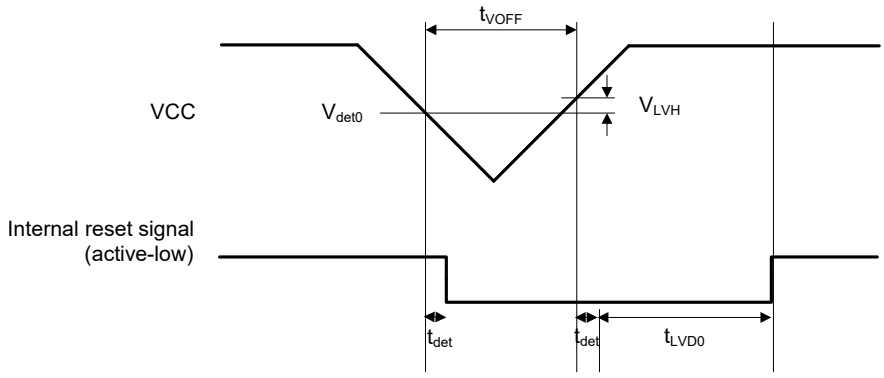

Figure 39.71 Voltage Detection Circuit Timing (Vdet0)

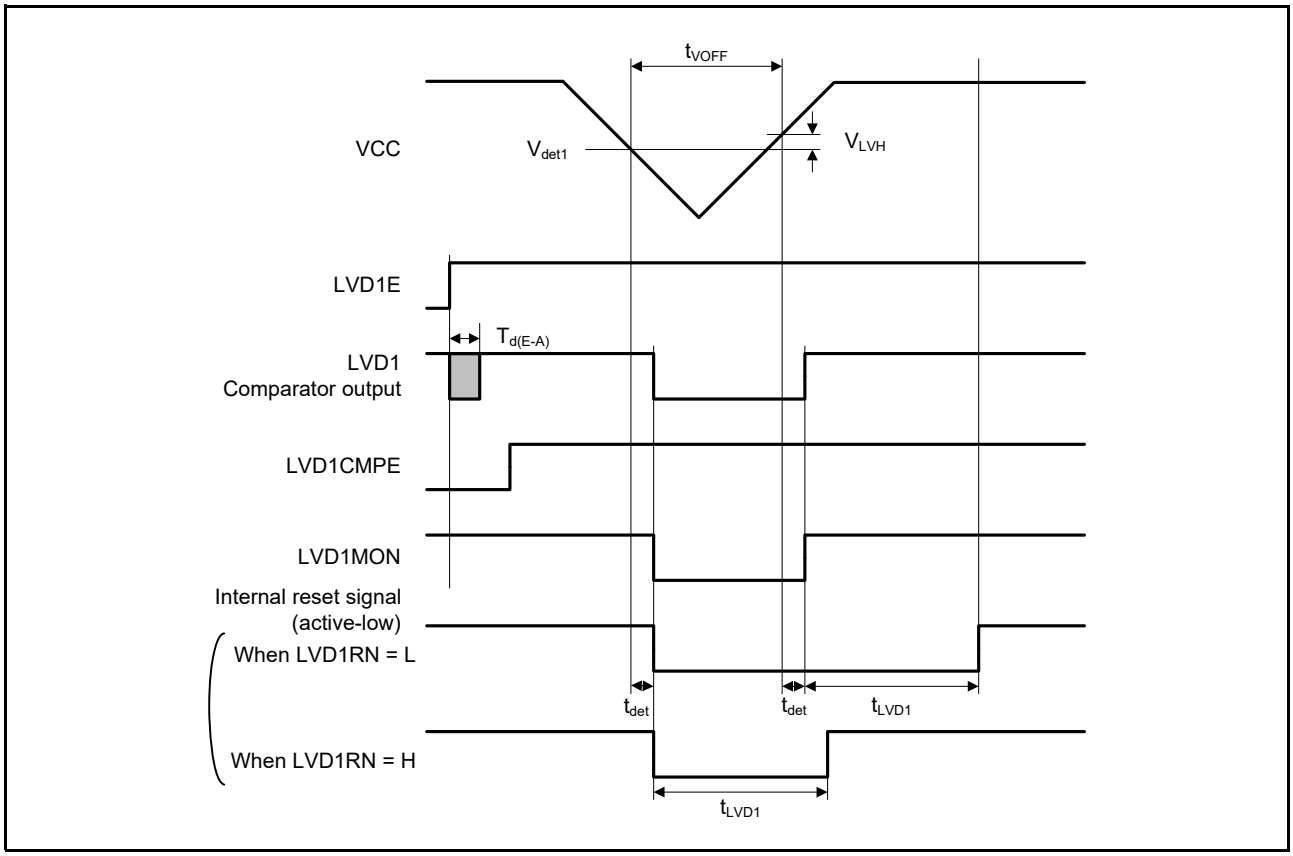

Figure 39.72 Voltage Detection Circuit Timing (V_{det1})

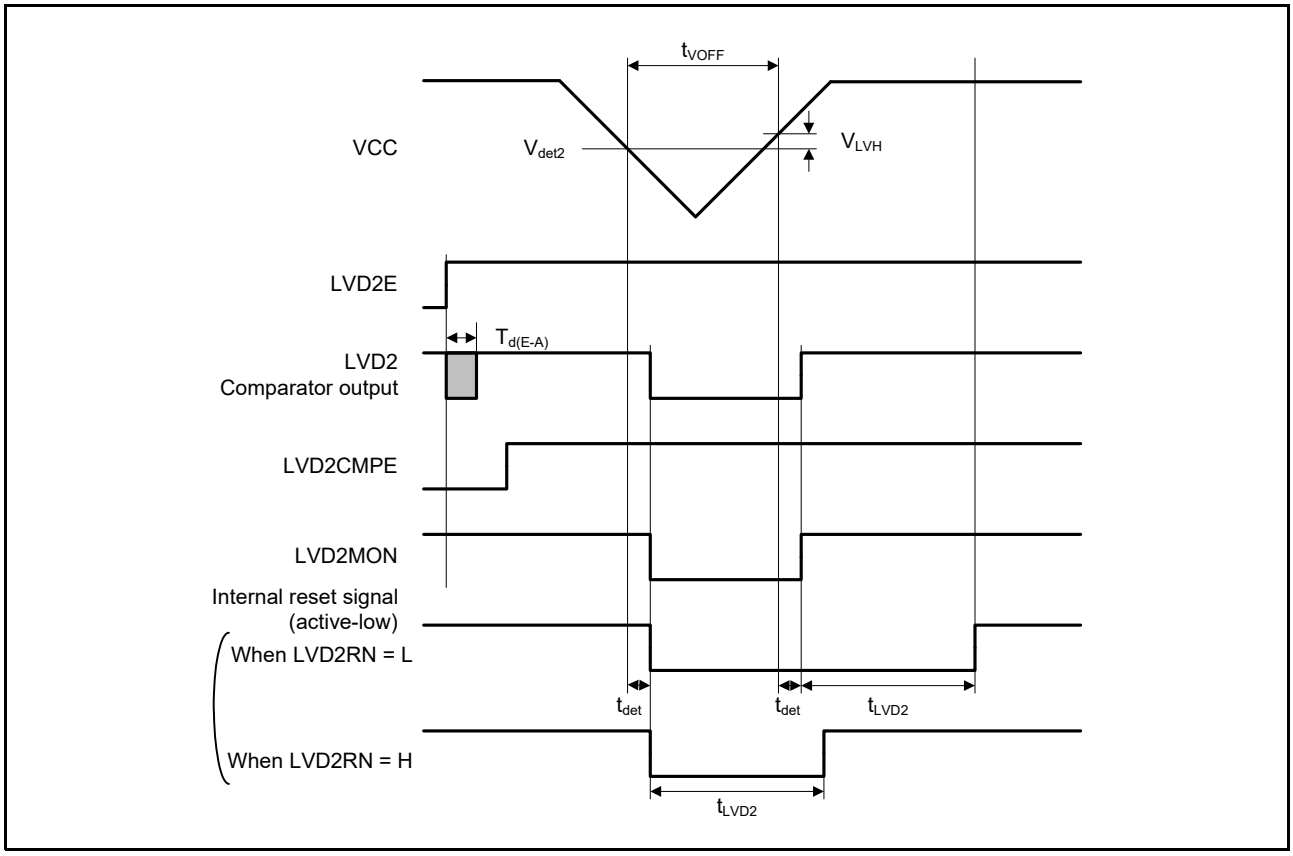

Figure 39.73 Voltage Detection Circuit Timing (V_{det2})

39.6 Oscillation Stop Detection Timing

Table 39.45 Oscillation Stop Detection Timing

Conditions: 1.8 V ≤ VCC = AVCC0 ≤ 5.5 V, VSS = AVSS0 = VREFL0 = 0 V, T_a = –40 to +105°C

Item	Symbol	Min.	Typ.	Max.	Unit	Test Conditions
Detection time	t_{dr}	—	—	1	ms	Figure 39.74

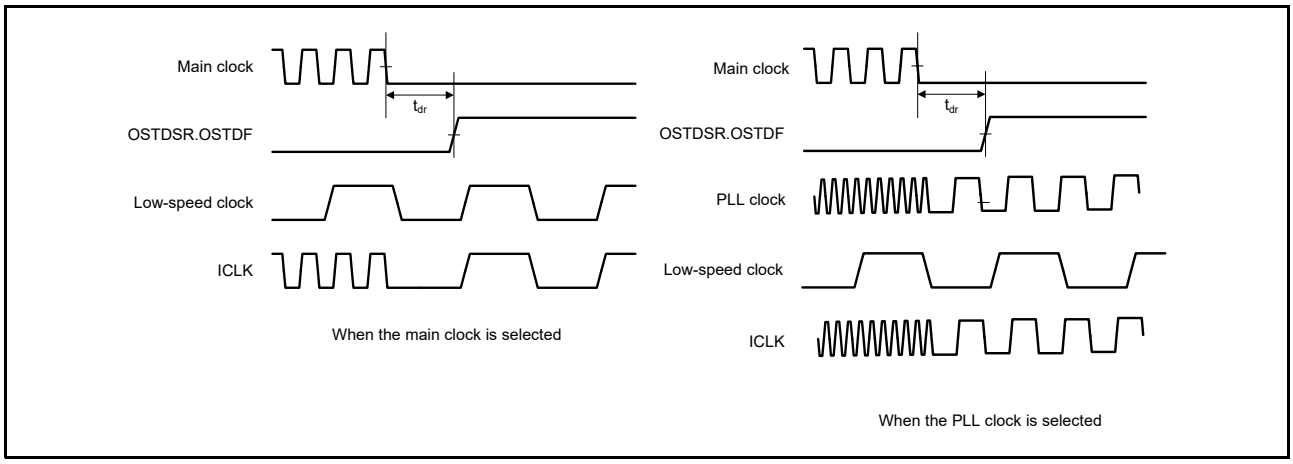

Figure 39.74 Oscillation Stop Detection Timing

39.7 ROM (Code Flash Memory) Characteristics

Table 39.46 ROM (Code Flash Memory) Characteristics (1)

Item		Symbol	Min.	Typ.	Max.	Unit	Conditions
Program/erase cycles*1		N_{PEC}	1000	—	—	Times	
Data retention	After 1000 times of erase	t_{DRP}	20*2, *3	—	—	Year	T_a = 85°C

Note 1. Definition of program/erase cycle:
The program/erase cycle is the number of erasing for each block. When the number of program/erase cycles is n, each block can be erased n times. For instance, when 4-byte program is performed 256 times for different addresses in a 1-Kbyte block and then the block is erased, the program/erase cycle is counted as one. However, the same address cannot be programmed more than once before the next erase cycle (overwriting is prohibited).
Note 2. Characteristic when using the flash programmer and the self-programming library provided from Renesas Electronics.
Note 3. This result is obtained from reliability testing.

Table 39.47 ROM (Code Flash Memory) Characteristics (2) (High-Speed Operating Mode)

Conditions: 2.7 V ≤ VCC = AVCC0 ≤ 5.5 V, VSS = AVSS0 = 0 V

Temperature range for the programming/erasure operation: T_a = –40 to +105°C

Item		Symbol	FCLK = 1 MHz			FCLK = 32 MHz			Unit
			Min.	Typ.	Max.	Min.	Typ.	Max.	
Program time	8-byte	t_{P8}	—	112.0	967.0	—	52.3	490.5	μs
Erase time	2-Kbyte	t_{E2K}	—	8.7	278.1	—	5.5	214.6	ms
	256-Kbyte (when block erase command is used)	t_{E256K}	—	469.1	9813.6	—	41.2	1049.2	ms
	256-Kbyte (when all-block erase command is used)	t_{EA256K}	—	463.9	9609.0	—	36.0	839.5	ms
Blank check time	8-byte	t_{BC8}	—	—	55.0	—	—	16.1	μs
	2-Kbyte	t_{BC2K}	—	—	1840.0	—	—	135.7	μs
Erase operation forced stop time		t_{SED}	—	—	18.0	—	—	10.7	μs
Start-up area switching time		t_{SAS}	—	12.3	566.5	—	6.2	433.5	ms
Access window setting time		t_{AWS}	—	12.3	566.5	—	6.2	433.5	ms
ROM mode transition wait time 1		t_{DIS}	2.0	—	—	2.0	—	—	μs
ROM mode transition wait time 2		t_{MS}	5.0	—	—	5.0	—	—	μs

Note: The time until each operation of the flash memory is started after instructions are executed by software is not included.
Note: The lower-limit frequency of FCLK is 1 MHz during programming or erasing of the flash memory. When using FCLK at below 4 MHz, the frequency can be set to 1 MHz, 2 MHz, or 3 MHz. A non-integer frequency such as 1.5 MHz cannot be set.
Note: The frequency accuracy of FCLK must be within ±3.5%.

Table 39.48 ROM (Code Flash Memory) Characteristics (3) (Middle-Speed Operating Mode)

Conditions: 1.8 V ≤ VCC = AVCC0 ≤ 5.5 V, VSS = AVSS0 = 0 V

Temperature range for the programming/erasure operation: T_a = –40 to +85°C

Item		Symbol	FCLK = 1 MHz			FCLK = 8 MHz			Unit
			Min.	Typ.	Max.	Min.	Typ.	Max.	
Program time	8-byte	t_{P8}	—	152.0	1367.0	—	97.9	936.0	μs
Erase time	2-Kbyte	t_{E2K}	—	8.8	279.7	—	5.9	220.8	ms
	256-Kbyte (when block erase command is used)	t_{E256K}	—	469.2	9816.9	—	100.5	2260.1	ms
	256-Kbyte (when all-block erase command is used)	t_{EA256K}	—	464.0	9610.7	—	95.3	2053.7	ms
Blank check time	8-byte	t_{BC8}	—	—	85.0	—	—	50.9	μs
	2-Kbyte	t_{BC2K}	—	—	1870.0	—	—	401.5	μs
Erase operation forced stop time		t_{SED}	—	—	28.0	—	—	21.3	μs
Start-up area switching time		t_{SAS}	—	13.0	573.3	—	7.7	450.1	ms
Access window setting time		t_{AWS}	—	13.0	573.3	—	7.7	450.1	ms
ROM mode transition wait time 1		t_{DIS}	2.0	—	—	2.0	—	—	μs
ROM mode transition wait time 2		t_{MS}	3.0	—	—	3.0	—	—	μs

Note: The time until each operation of the flash memory is started after instructions are executed by software is not included.

Note: The lower-limit frequency of FCLK is 1 MHz during programming or erasing of the flash memory. When using FCLK at below 4 MHz, the frequency can be set to 1 MHz, 2 MHz, or 3 MHz. A non-integer frequency such as 1.5 MHz cannot be set.

Note: The frequency accuracy of FCLK must be within ±3.5%.

39.8 E2 DataFlash (Data Flash Memory) Characteristics

Table 39.49 E2 DataFlash Characteristics (1)

Item		Symbol	Min.	Typ.	Max.	Unit	Conditions
Program/erase cycles*1		N_{DPEC}	100000	1000000	—	Times	
Data retention	After 10000 times of erase	t_{DDRP}	20*2, *3	—	—	Year	T_a = 85°C
	After 100000 times of erase		5*2, *3	—	—	Year	
	After 1000000 times of erase		—	1*2, *3	—	Year	T_a = 25°C

Note 1. Definition of program/erase cycle:
The program/erase cycle is the number of erasing for each block. When the number of program/erase cycle is n, each block can be erased n times. For instance, when 1-byte program is performed 1000 times for different addresses in a 1-Kbyte block and then the block is erased, the program/erase cycle is counted as one. However, the same address cannot be programmed more than once before the next erase cycle (overwriting is prohibited).
Note 2. Characteristic when the flash programmer is used and the self-programming library is provided from Renesas Electronics.
Note 3. These results are obtained from reliability testing.

Table 39.50 E2 DataFlash Characteristics (2) (High-Speed Operating Mode)

Conditions: 2.7 V ≤ VCC = AVCC0 ≤ 5.5 V, VSS = AVSS0 = 0 V

Temperature range for the programming/erasure operation: T_a = –40 to +105°C

Item		Symbol	FCLK = 1 MHz			FCLK = 32 MHz			Unit
			Min.	Typ.	Max.	Min.	Typ.	Max.	
Program time	1 byte	t_{DP1}	—	95.0	797.0	—	40.8	375.5	μs
Erase time	1 Kbyte	t_{DE1K}	—	19.5	498.5	—	6.2	229.4	ms
	8 Kbyte	t_{DE8K}	—	119.8	2555.7	—	12.9	367.2	ms
Blank check time	1 byte	t_{DBC1}	—	—	55.0	—	—	16.1	μs
	1 Kbyte	t_{DBC1K}	—	—	7216.0	—	—	495.7	μs
Erase operation forced stop time		t_{DSED}	—	—	16.0	—	—	10.7	μs
DataFlash STOP recovery time		t_{DSTOP}	5.0	—	—	5.0	—	—	μs

Note: The time until each operation of the flash memory is started after instructions are executed by software is not included.
Note: The lower-limit frequency of FCLK is 1 MHz during programming or erasing of the flash memory. When using FCLK at below 4 MHz, the frequency can be set to 1 MHz, 2 MHz, or 3 MHz. A non-integer frequency such as 1.5 MHz cannot be set.
Note: The frequency accuracy of FCLK must be within ±3.5%.

Table 39.51 E2 DataFlash Characteristics (3) (Middle-Speed Operating Mode)

Conditions: 1.8 V ≤ VCC = AVCC0 ≤ 5.5 V, VSS = AVSS0 = 0 V

Temperature range for the programming/erasure operation: T_a = –40 to +85°C

Item		Symbol	FCLK = 1 MHz			FCLK = 8 MHz			Unit
			Min.	Typ.	Max.	Min.	Typ.	Max.	
Programming time	1 byte	t_{DP1}	—	135.0	1197.0	—	86.5	822.5	μs
Erasure time	1 Kbyte	t_{DE1K}	—	19.6	500.1	—	8.0	264.1	ms
	8 Kbyte	t_{DE8K}	—	119.9	2557.4	—	27.7	668.2	ms
Blank check time	1 byte	t_{DBC1}	—	—	85.0	—	—	50.9	μs
	1 Kbyte	t_{DBC1K}	—	—	7246.0	—	—	1457.5	μs
Erase operation forced stop time		t_{DSED}	—	—	28.0	—	—	21.3	μs
DataFlash STOP recovery time		t_{DSTOP}	0.72	—	—	0.72	—	—	μs

Note: The time until each operation of the flash memory is started after instructions are executed by software is not included.
Note: The lower-limit frequency of FCLK is 1 MHz during programming or erasing of the flash memory. When using FCLK at below 4 MHz, the frequency can be set to 1 MHz, 2 MHz, or 3 MHz. A non-integer frequency such as 1.5 MHz cannot be set.
Note: The frequency accuracy of FCLK must be within ±3.5%.

39.9 24-Bit Delta-Sigma A/D Converter Characteristics

Table 39.52 24-Bit Delta-Sigma A/D Converter Characteristics

Conditions: 1.8 V ≤ VCC ≤ 5.5 V, 2.7 V ≤ AVCC0 ≤ 5.5 V, VSS = AVSS0 = 0 V, V_{REF} = 2.5 V, T_a = –40 to +105°C

Item		Symbol	Min.	Typ.	Max.	Unit	Test Conditions
Gain		Gain	1, 2, 4, 8, 16, 32, 64, 128			—	
Output data rate	Normal mode	f_{DR}	7.6	—	15625	SPS	
	Low power mode		1.9	—	3906		
Resolution (no missing codes)		—	24	—	—	Bits	
RMS noise		V_N	—	Table 39.53, Table 39.55	—	—	Figure 39.75 to Figure 39.91
Integral non-linearity	Gain = 1 (PGA enabled), Normal/low power mode, OPCR.DSADLVM bit = 0	INL	—	±7	±15	ppmFSR	Figure 39.92, Figure 39.93 AVCC0 = 3.6 to 5.5 V
	Gain = 2 to 64, Normal/low power mode, OPCR.DSADLVM bit = 0		—	±4	±15		
	Gain = 128, Normal mode, OPCR.DSADLVM bit = 0		—	±5	±15		
	Gain = 128, Low power mode, OPCR.DSADLVM bit = 0		—	±7	±20		
	Gain = 1 to 128 (PGA enabled), Normal/low power mode, OPCR.DSADLVM bit = 1		—	±7	±30		AVCC0 = 2.7 to 5.5 V
	Gain = 1 (PGA disabled, BUF disabled)		—	±7	±20		AVCC0 = 2.7 to 5.5 V, V_I < 2.6 V
	Gain = 1 (PGA disabled, BUF enabled)		—	±7	—		
Offset error	Before calibration	E_O	—	—	±10	μV	Figure 39.94 AVCC0 = 5.0 V, T_a = 25°C, Normal mode, Gain = 2
	After calibration		—	Less than or equal to the RMS noise	—		
Offset drift	Gain = 1 or 2 (PGA enabled)	dE_O	—	60	220	nV/°C	Figure 39.94
	Gain = 4 to 8		—	40	140		
	Gain = 16 to 32		—	15	40		
	Gain = 64 to 128		—	10	25		
	Gain = 1 (PGA disabled, BUF disabled)		—	50	140		
Gain error	Gain = 1 to 64 (PGA enabled)	E_G	—	±0.01	±0.03	%	Figure 39.95 T_a = 25°C
	Gain = 128		—	±0.01	±0.04		
	Gain = 1 (PGA disabled, BUF disabled)		—	±0.015	±0.04		
	Gain = 1 (PGA disabled, BUF enabled)		—	±0.03	—		
	After calibration of gain errors		—	Less than or equal to the RMS noise	—		

Item		Symbol	Min.	Typ.	Max.	Unit	Test Conditions
Gain drift	Gain = 1 to 128 (PGA enabled), OPCR.DSADLVM bit = 0	dE_G	—	1	3	ppm/°C	Figure 39.95
	Gain = 1 to 128 (PGA enabled), OPCR.DSADLVM bit = 1		—	1	5		AVCC0 = 3.0 to 5.5 V
			—	—	10		AVCC0 < 3.0 V
	Gain = 1 (PGA disabled)		—	1.4	—		Figure 39.95 V_I < 2.6 V
Power supply rejection ratio	Gain = 1 (PGA enabled)	PSRR	80	88	—	dB	V_{ID} = 1 V/Gain (DC)
	Gain = 2 to 16		89	95	—		
	Gain = 32 to 128		102	115	—		
	Gain = 1 (PGA disabled, BUF disabled)		68	88	—		V_{ID} = 1 V (DC)
	Gain = 1 (PGA disabled, BUF enabled)		—	78	—		
Common mode rejection ratio	Gain = 1 to 8 (PGA enabled), OPCR.DSADLVM bit = 0	CMRR	95	100	—	dB	V_{ID} = 1 V/Gain (DC)
	Gain = 16 to 32, OPCR.DSADLVM bit = 0		110	120	—		
	Gain = 64 to 128, OPCR.DSADLVM bit = 0		120	130	—		
	Gain = 1 to 8 (PGA enabled), OPCR.DSADLVM bit = 1		80	100	—		
	Gain = 16 to 32, OPCR.DSADLVM bit = 1		88	120	—		
	Gain = 64 to 128, OPCR.DSADLVM bit = 1		100	130	—		
	Gain = 1 (PGA disabled, BUF disabled)		60	88	—		V_{ID} = 1 V (DC)
	Gain = 1 (PGA disabled, BUF enabled)		—	78	—		
Normal mode rejection ratio	External clock, 50 Hz, 60 Hz	NMRR	120	—	—	dB	10 SPS, 50 ± 1 Hz, 60 ± 1 Hz
			75	—	—		54 SPS, 50 ± 1 Hz, 60 ± 1 Hz
	External clock, 50 Hz		120	—	—		50 SPS, 50 ± 1 Hz
	External clock, 60 Hz		120	—	—		60 SPS, 60 ± 1 Hz
	Internal clock (HOCO), 50 Hz, 60 Hz		110	—	—		10 SPS, 50 ± 1 Hz, 60 ± 1 Hz
			70	—	—		54 SPS, 50 ± 1 Hz, 60 ± 1 Hz
	Internal clock (HOCO), 50 Hz		110	—	—		50 SPS, 50 ± 1 Hz
	Internal clock (HOCO), 60 Hz		110	—	—		60 SPS, 60 ± 1 Hz
Burnout current		I_{BO}	0.5, 2, 4, 20			μA	
Modulator clock	Normal mode	f_{MOD}	430	500	570	kHz	
	Low power mode		107.5	125.0	142.5		

Table 39.53 Typical Noise Characteristics (Normal Mode)

Conditions: AVCC0 = 5.0 V, T_a = 25°C, f_{MOD} = 500 kHz, V_{ID} = 0 V, V_{REF} = 2.5 V

f_{DR} (SPS)	OSR	Gain = 1 (Bypass)	Gain = 1 (BUF)	Gain = 1 (PGA)	Gain = 2	Gain = 4	Gain = 8	Gain = 16	Gain = 32	Gain = 64	Gain = 128
7.6	65536	0.383 (2.39)	0.524 (2.69)	0.601 (3.89)	0.563 (3.59)	0.284 (2.02)	0.166 (1.08)	0.097 (0.60)	0.052 (0.34)	0.036 (0.28)	0.029 (0.20)
10	50048	0.426 (2.64)	0.671 (3.96)	0.680 (4.40)	0.618 (4.18)	0.322 (2.53)	0.185 (1.15)	0.108 (0.71)	0.056 (0.40)	0.041 (0.27)	0.033 (0.20)
50	9984	0.878 (5.42)	1.117 (7.59)	1.308 (9.76)	1.196 (7.59)	0.667 (5.15)	0.369 (2.51)	0.230 (1.69)	0.121 (0.92)	0.084 (0.61)	0.072 (0.52)
54	9216	0.929 (6.35)	1.225 (9.71)	1.359 (10.5)	1.254 (9.52)	0.702 (4.85)	0.392 (2.85)	0.240 (1.70)	0.127 (0.88)	0.090 (0.59)	0.076 (0.51)
60	8320	0.973 (7.31)	1.279 (8.99)	1.450 (10.7)	1.345 (9.27)	0.723 (4.50)	0.426 (3.30)	0.258 (1.48)	0.129 (1.07)	0.093 (0.59)	0.080 (0.58)
100	4992	1.228 (8.67)	1.673 (11.4)	1.873 (13.0)	1.673 (9.76)	0.904 (5.96)	0.536 (3.46)	0.327 (2.41)	0.172 (1.19)	0.128 (0.96)	0.100 (0.68)
195	2560	1.681 (12.7)	2.206 (18.6)	2.530 (16.7)	2.378 (16.7)	1.277 (8.45)	0.710 (4.65)	0.460 (3.15)	0.238 (1.55)	0.176 (1.16)	0.139 (0.90)
488	1024	2.697 (17.3)	3.311 (22.4)	3.954 (29.3)	3.881 (27.4)	2.007 (13.5)	1.175 (8.52)	0.723 (4.73)	0.355 (2.28)	0.264 (1.80)	0.231 (1.55)
977	512	3.691 (27.5)	4.740 (29.0)	5.758 (36.5)	5.442 (35.7)	2.871 (20.0)	1.656 (12.0)	1.025 (6.67)	0.522 (3.53)	0.389 (2.57)	0.321 (2.21)
1953	256	5.734 (35.3)	6.572 (42.5)	8.535 (55.3)	7.438 (48.9)	4.130 (28.2)	2.308 (15.8)	1.434 (9.34)	0.768 (4.85)	0.567 (4.05)	0.476 (2.71)
3906	128	7.446 (51.1)	9.607 (65.8)	12.32 (70.0)	11.15 (76.5)	5.778 (38.6)	3.476 (27.2)	2.237 (14.7)	1.162 (7.83)	0.831 (5.98)	0.669 (4.21)
7813	64	13.60 (102)	15.91 (110)	21.39 (143)	19.22 (120)	10.43 (67.6)	5.971 (39.0)	3.760 (26.4)	2.161 (13.9)	1.482 (11.0)	1.112 (6.96)
15625	32	120.5 (644)	117.5 (720)	112.5 (735)	67.81 (347)	36.42 (218)	17.96 (109)	9.766 (58.7)	5.812 (37.6)	3.726 (22.2)	2.498 (16.9)

Note: "Bypass" indicates the state where both PGA and BUF are disabled, "BUF" indicates the state where PGA is disabled and BUF is enabled, and "PGA" indicates the state where PGA is enabled.

Note: The upper rows indicate RMS noise (μV_{RMS}) and the lower rows (in parentheses) indicate peak-to-peak noise (μV_{PP}).

Table 39.54 Effective Resolution (Normal Mode)

Conditions: AVCC0 = 5.0 V, T_a = 25°C, f_{MOD} = 500 kHz, V_{ID} = 0 V, V_{REF} = 2.5 V

f_{DR} (SPS)	OSR	Gain = 1 (Bypass)	Gain = 1 (BUF)	Gain = 1 (PGA)	Gain = 2	Gain = 4	Gain = 8	Gain = 16	Gain = 32	Gain = 64	Gain = 128
7.6	65536	23.6 (21.0)	23.1 (20.8)	23.0 (20.3)	22.1 (19.4)	22.1 (19.2)	21.8 (19.1)	21.6 (19.0)	21.5 (18.8)	21.0 (18.1)	20.4 (17.6)
10	50048	23.5 (20.9)	22.8 (20.2)	22.8 (20.1)	22.0 (19.2)	21.9 (18.9)	21.7 (19.1)	21.5 (18.7)	21.4 (18.6)	20.9 (18.2)	20.2 (17.6)
50	9984	22.4 (19.8)	22.0 (19.3)	21.9 (19.0)	21.0 (18.3)	20.8 (17.9)	20.7 (17.9)	20.4 (17.5)	20.3 (17.4)	19.8 (17.0)	19.0 (16.2)
54	9216	22.4 (19.6)	21.9 (18.9)	21.8 (18.9)	20.9 (18.0)	20.8 (18.0)	20.6 (17.7)	20.3 (17.5)	20.2 (17.5)	19.7 (17.0)	19.0 (16.2)
60	8320	22.3 (19.4)	21.8 (19.0)	21.7 (18.8)	20.8 (18.0)	20.7 (18.1)	20.5 (17.5)	20.2 (17.7)	20.2 (17.2)	19.7 (17.0)	18.9 (16.1)
100	4992	22.0 (19.1)	21.5 (18.7)	21.4 (18.6)	20.5 (18.0)	20.4 (17.7)	20.2 (17.5)	19.9 (17.0)	19.8 (17.0)	19.2 (16.3)	18.6 (15.8)
195	2560	21.5 (18.6)	21.1 (18.0)	21.0 (18.2)	20.0 (17.2)	19.9 (17.2)	19.8 (17.0)	19.4 (16.6)	19.3 (16.6)	18.8 (16.0)	18.1 (15.4)
488	1024	20.8 (18.1)	20.5 (17.7)	20.3 (17.4)	19.3 (16.5)	19.3 (16.5)	19.0 (16.2)	18.7 (16.0)	18.8 (16.1)	18.2 (15.4)	17.4 (14.6)
977	512	20.4 (17.5)	20.0 (17.3)	19.7 (17.1)	18.8 (16.1)	18.7 (15.9)	18.5 (15.7)	18.2 (15.5)	18.2 (15.4)	17.6 (14.9)	16.9 (14.1)
1953	256	19.7 (17.1)	19.5 (16.8)	19.2 (16.5)	18.4 (15.6)	18.2 (15.4)	18.1 (15.3)	17.7 (15.0)	17.6 (15.0)	17.1 (14.2)	16.3 (13.8)
3906	128	19.4 (16.6)	18.9 (16.2)	18.6 (16.1)	17.8 (15.0)	17.7 (15.0)	17.5 (14.5)	17.1 (14.4)	17.0 (14.3)	16.5 (13.7)	15.8 (13.2)
7813	64	18.5 (15.6)	18.2 (15.4)	17.8 (15.1)	17.0 (14.3)	16.9 (14.2)	16.7 (14.0)	16.3 (13.5)	16.1 (13.5)	15.7 (12.8)	15.1 (12.5)
15625	32	15.3 (12.9)	15.3 (12.7)	15.4 (12.7)	15.2 (12.8)	15.1 (12.5)	15.1 (12.5)	15.0 (12.4)	14.7 (12.0)	14.4 (11.8)	13.9 (11.2)

Effective resolution = $\log_2$(full-scale voltage/RMS noise)

Noise-free resolution = $\log_2$(full-scale voltage/peak-to-peak noise)

Note: “Bypass” indicates the state where both PGA and BUF are disabled, “BUF” indicates the state where PGA is disabled and BUF is enabled, and “PGA” indicates the state where PGA is enabled.

Note: The upper rows indicate effective resolution (bits) and the lower rows (in parentheses) indicate noise-free resolution (bits).

Table 39.55 Typical Noise Characteristics (Low Power Mode)

Conditions: AVCC0 = 5.0 V, T_a = 25°C, f_{MOD} = 125 kHz, V_{ID} = 0 V, V_{REF} = 2.5 V

f_{DR} (SPS)	OSR	Gain = 1 (Bypass)	Gain = 1 (BUF)	Gain = 1 (PGA)	Gain = 2	Gain = 4	Gain = 8	Gain = 16	Gain = 32	Gain = 64	Gain = 128
1.9	65536	0.463 (3.29)	0.640 (4.19)	0.892 (5.38)	0.708 (4.63)	0.444 (2.62)	0.245 (1.72)	0.140 (0.90)	0.070 (0.47)	0.048 (0.34)	0.038 (0.25)
10	12512	1.053 (7.03)	1.313 (8.79)	1.596 (11.4)	1.492 (10.6)	0.797 (5.27)	0.437 (2.86)	0.286 (1.79)	0.143 (1.00)	0.109 (0.72)	0.085 (0.61)
50	2496	2.412 (15.7)	2.883 (18.4)	3.390 (21.7)	3.093 (22.5)	1.669 (11.0)	0.954 (5.96)	0.592 (3.86)	0.317 (2.35)	0.228 (1.69)	0.187 (1.22)
54	2304	2.558 (19.4)	3.098 (20.5)	3.544 (23.9)	3.139 (19.4)	1.719 (11.3)	0.962 (6.39)	0.637 (3.92)	0.333 (2.12)	0.242 (1.81)	0.199 (1.39)
60	2080	2.491 (16.3)	3.230 (20.8)	3.598 (26.4)	3.348 (25.0)	1.810 (13.6)	1.024 (7.38)	0.645 (4.50)	0.346 (2.30)	0.257 (1.88)	0.207 (1.37)
100	1248	3.237 (21.7)	3.843 (26.6)	4.794 (32.5)	4.274 (27.1)	2.319 (15.3)	1.357 (9.35)	0.872 (6.37)	0.454 (2.98)	0.338 (2.29)	0.268 (1.83)
195	640	4.663 (37.7)	5.666 (37.7)	6.826 (46.5)	5.799 (39.7)	3.245 (21.3)	1.930 (12.9)	1.164 (7.50)	0.627 (4.61)	0.474 (3.31)	0.371 (2.68)
488	256	7.451 (46.6)	9.151 (62.5)	10.30 (70.9)	9.404 (59.6)	5.216 (35.7)	2.934 (20.2)	1.869 (13.6)	1.006 (6.13)	0.729 (5.46)	0.599 (4.56)
977	128	10.37 (72.4)	13.13 (83.1)	15.63 (111)	13.71 (93.3)	7.605 (63.0)	4.383 (30.3)	2.796 (18.0)	1.510 (9.78)	1.099 (7.60)	0.908 (7.23)
1953	64	16.80 (117)	19.92 (153)	25.41 (177)	22.23 (138)	12.30 (94.9)	7.226 (50.9)	4.520 (30.6)	2.531 (16.2)	1.927 (13.6)	1.499 (11.1)
3906	32	120.9 (720)	120.4 (761)	126.6 (634)	73.29 (507)	36.82 (216)	19.83 (124)	11.22 (78.4)	6.332 (39.1)	4.427 (27.3)	3.143 (20.0)

Note: "Bypass" indicates the state where both PGA and BUF are disabled, "BUF" indicates the state where PGA is disabled and BUF is enabled, and "PGA" indicates the state where PGA is enabled.

Note: The upper rows indicate RMS noise (μV_{RMS}) and the lower rows (in parentheses) indicate peak-to-peak noise (μV_{PP}).

Table 39.56 Effective Resolution (Low Power Mode)

Conditions: AVCC0 = 5.0 V, T_a = 25°C, f_{MOD} = 125 kHz, V_{ID} = 0 V, V_{REF} = 2.5 V

f_{DR} (SPS)	OSR	Gain = 1 (Bypass)	Gain = 1 (BUF)	Gain = 1 (PGA)	Gain = 2	Gain = 4	Gain = 8	Gain = 16	Gain = 32	Gain = 64	Gain = 128
1.9	65536	23.4 (20.5)	22.8 (20.1)	22.4 (19.8)	21.8 (19.0)	21.4 (18.9)	21.3 (18.5)	21.1 (18.4)	21.1 (18.4)	20.6 (17.8)	20.0 (17.3)
10	12512	22.2 (19.4)	21.8 (19.1)	21.6 (18.7)	20.7 (17.9)	20.6 (17.9)	20.5 (17.7)	20.1 (17.4)	20.1 (17.3)	19.5 (16.7)	18.8 (16.0)
50	2496	21.0 (18.3)	20.7 (18.0)	20.5 (17.8)	19.6 (16.8)	19.5 (16.8)	19.3 (16.7)	19.0 (16.3)	18.9 (16.0)	18.4 (15.5)	17.7 (15.0)
54	2304	20.9 (18.0)	20.6 (17.8)	20.4 (17.7)	19.6 (17.0)	19.5 (16.8)	19.3 (16.6)	18.9 (16.3)	18.8 (16.2)	18.3 (15.4)	17.6 (14.8)
60	2080	20.9 (18.2)	20.5 (17.8)	20.4 (17.5)	19.5 (16.6)	19.4 (16.5)	19.2 (16.4)	18.9 (16.1)	18.8 (16.1)	18.2 (15.3)	17.5 (14.8)
100	1248	20.6 (17.8)	20.3 (17.5)	20.0 (17.2)	19.2 (16.5)	19.0 (16.3)	18.8 (16.0)	18.5 (15.6)	18.4 (15.7)	17.8 (15.1)	17.2 (14.4)
195	640	20.0 (17.0)	19.7 (17.0)	19.5 (16.7)	18.7 (15.9)	18.6 (15.8)	18.3 (15.6)	18.0 (15.4)	17.9 (15.1)	17.3 (14.5)	16.7 (13.8)
488	256	19.4 (16.7)	19.0 (16.2)	18.9 (16.1)	18.0 (15.4)	17.9 (15.1)	17.7 (14.9)	17.4 (14.5)	17.3 (14.6)	16.7 (13.8)	16.0 (13.1)
977	128	18.9 (16.1)	18.5 (15.8)	18.3 (15.4)	17.5 (14.7)	17.3 (14.3)	17.1 (14.3)	16.8 (14.1)	16.7 (14.0)	16.1 (13.3)	15.4 (12.4)
1953	64	18.2 (15.4)	17.9 (14.9)	17.6 (14.8)	16.8 (14.2)	16.6 (13.7)	16.4 (13.6)	16.1 (13.3)	15.9 (13.2)	15.3 (12.5)	14.7 (11.8)
3906	32	15.3 (12.8)	15.3 (12.6)	15.3 (12.9)	15.1 (12.3)	15.1 (12.5)	14.9 (12.3)	14.8 (12.0)	14.6 (12.0)	14.1 (11.5)	13.6 (10.9)

Effective resolution = $\log_2$(full-scale voltage/RMS noise)

Noise-free resolution = $\log_2$(full-scale voltage/peak-to-peak noise)

Note: "Bypass" indicates the state where both PGA and BUF are disabled, "BUF" indicates the state where PGA is disabled and BUF is enabled, and "PGA" indicates the state where PGA is enabled.

Note: The upper rows indicate effective resolution (bits) and the lower rows (in parentheses) indicate noise-free resolution (bits).

Table 39.57 24-Bit Delta-Sigma A/D Converter Analog Input Characteristics

Conditions: 1.8 V ≤ VCC ≤ 5.5 V, 2.7 V ≤ AVCC0 ≤ 5.5 V, VSS = AVSS0 = 0 V, T_a = –40 to +105°C

Item		Symbol	Min.	Typ.	Max.	Unit	Test Conditions
Differential input voltage range	Gain = 1 (PGA disabled)	V_{IDR}	$-V_{REF}$	—	$+V_{REF}$	V	$V_{REF} = V_{(REFnP)} - V_{(REFnN)}$ (n = 0, 1), or $V_{REF} = V_{REFOUT}$
	Gain = 1 (PGA enabled)		Whichever is greater of the values of $-V_{REF}$ and −(AVCC0 – AVSS0 – 0.5V)	—	Whichever is smaller of the values of $+V_{REF}$ and +(AVCC0 – AVSS0 – 0.5V)		
	Gain ≥ 2		$-V_{REF}$/ Gain	—	$+V_{REF}$ / Gain		
Absolute input voltage range	Gain = 1 (PGA disabled, BUF disabled)	V_I	AVSS0 – 0.05	—	AVCC0 + 0.05	V	
	Gain = 1 (PGA disabled, BUF enabled)		AVSS0 + 0.1	—	AVCC0 – 0.1		
	Gain = 1 to 128 (PGA enabled)		AVSS0 – 0.05	—	AVCC0 + 0.05		
Input bias current	Gain = 1 to 128 (PGA enabled)	I_{IB}	—	±5	±25	nA	Figure 39.96 T_a = 25°C
	Gain = 1 (PGA disabled, BUF disabled), OPCR.DSADLVM = 0		—	±1	±5		
	Gain = 1 (PGA disabled, BUF enabled)		—	±1	±5		
	Gain = 1 (PGA disabled, BUF disabled), OPCR.DSADLVM = 1		—	±1.5	±3.0	μA	
Input offset current	Gain = 1 to 128 (PGA enabled)	I_{IO}	—	±3	±10	nA	Figure 39.97 T_a = 25°C
	Gain = 1 (PGA disabled, BUF enabled)		—	±0.5	±2.0		
	Gain = 1 (PGA disabled, BUF disabled)		—	5	10	μA/V	
Input bias current drift	Gain = 1 to 16 (PGA enabled)	dI_{IB}	—	50	180	pA/°C	
	Gain = 32 to 128		—	70	200		
	Gain = 1 (PGA disabled, BUF enabled)		—	50	100		
	Gain = 1 (PGA disabled, BUF disabled), OPCR.DSADLVM = 0		—	50	100		
	Gain = 1 (PGA disabled, BUF disabled), OPCR.DSADLVM = 1		—	300	500		
Input offset current drift	Gain = 1 to 128 (PGA enabled)	dI_{IO}	—	50	200	pA/°C	
	Gain = 1 (PGA disabled, BUF enabled)		—	45	80		
	Gain = 1 (PGA disabled, BUF disabled)		—	170	350	pA/V/°C	

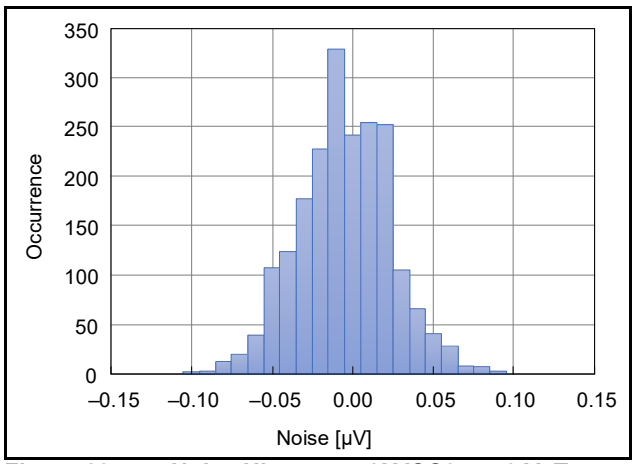

Figure 39.75 Noise Histogram (AVCC0 = 5.0 V, T_a = 25°C, Normal Mode, Gain = 128, f_{DR} = 7.6 SPS, V_{ID} = 0V, V_{REF} = 2.5V)

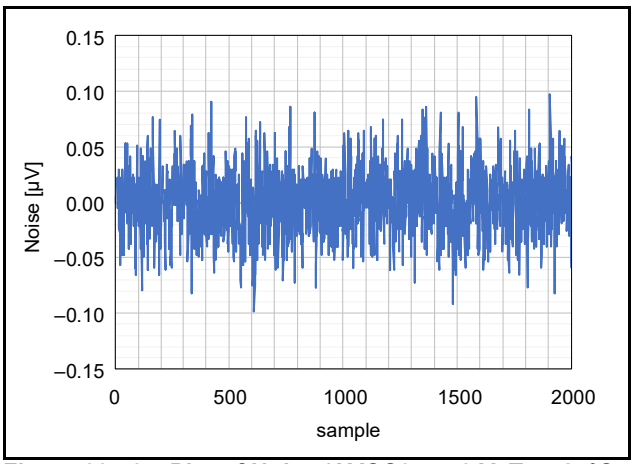

Figure 39.76 Plot of Noise (AVCC0 = 5.0 V, T_a = 25°C, Normal Mode, Gain = 128, f_{DR} = 7.6 SPS, V_{ID} = 0V, V_{REF} = 2.5V)

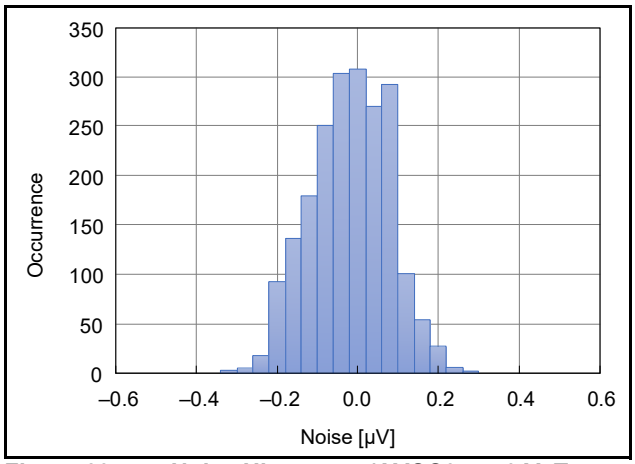

Figure 39.77 Noise Histogram (AVCC0 = 5.0 V, T_a = 25°C, Normal Mode, Gain = 16, f_{DR} = 7.6 SPS, V_{ID} = 0V, V_{REF} = 2.5V)

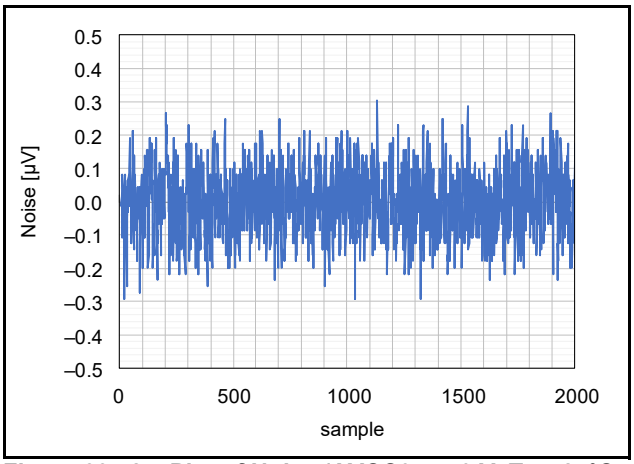

Figure 39.78 Plot of Noise (AVCC0 = 5.0 V, T_a = 25°C, Normal Mode, Gain = 16, f_{DR} = 7.6 SPS, V_{ID} = 0V, V_{REF} = 2.5V)

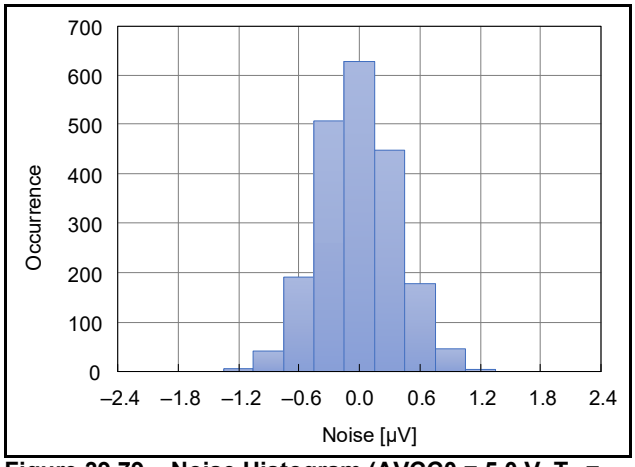

Figure 39.79 Noise Histogram (AVCC0 = 5.0 V, T_a = 25°C, Normal Mode, Gain = 1 (PGA disabled, BUF disabled), f_{DR} = 7.6 SPS, V_{ID} = 0V, V_{REF} = 2.5V)

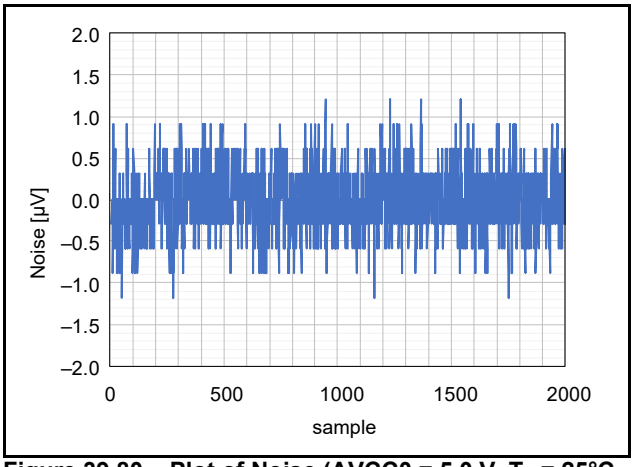

Figure 39.80 Plot of Noise (AVCC0 = 5.0 V, T_a = 25°C, Normal Mode, Gain = 1 (PGA disabled, BUF disabled), f_{DR} = 7.6 SPS, V_{ID} = 0V, V_{REF} = 2.5V)

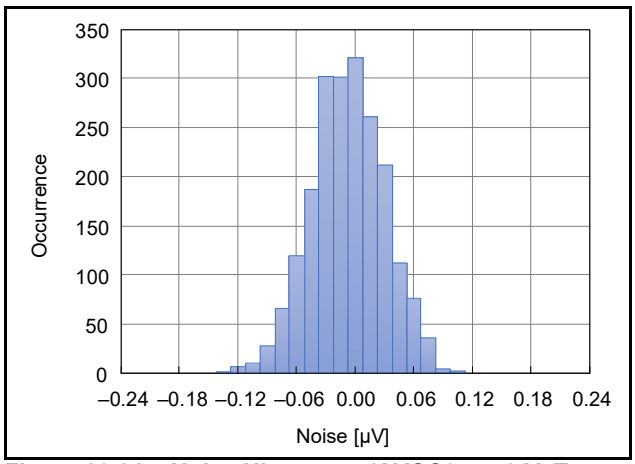

Figure 39.81 Noise Histogram (AVCC0 = 5.0 V, T_a = 25°C, Low Power Mode, Gain = 128, f_{DR} = 1.9 SPS, V_{ID} = 0V, V_{REF} = 2.5V)

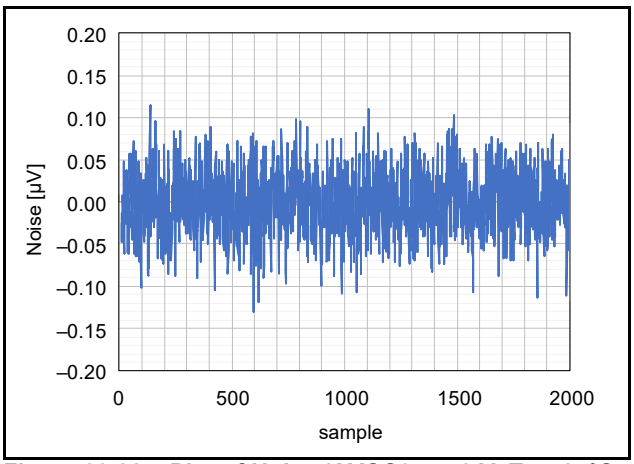

Figure 39.82 Plot of Noise (AVCC0 = 5.0 V, T_a = 25°C, Low Power Mode, Gain = 128, f_{DR} = 1.9 SPS, V_{ID} = 0V, V_{REF} = 2.5V)

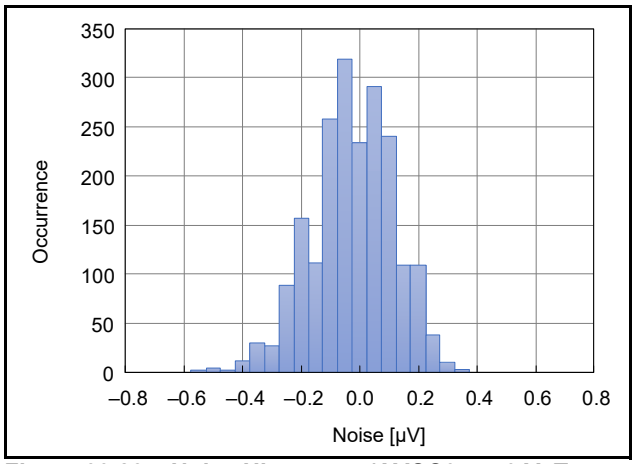

Figure 39.83 Noise Histogram (AVCC0 = 5.0 V, T_a = 25°C, Low Power Mode, Gain = 16, f_{DR} = 1.9 SPS, V_{ID} = 0V, V_{REF} = 2.5V)

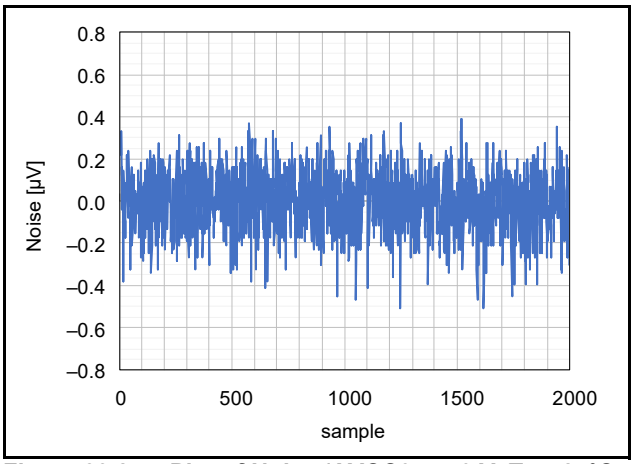

Figure 39.84 Plot of Noise (AVCC0 = 5.0 V, T_a = 25°C, Low Power Mode, Gain = 16, f_{DR} = 1.9 SPS, V_{ID} = 0V, V_{REF} = 2.5V)

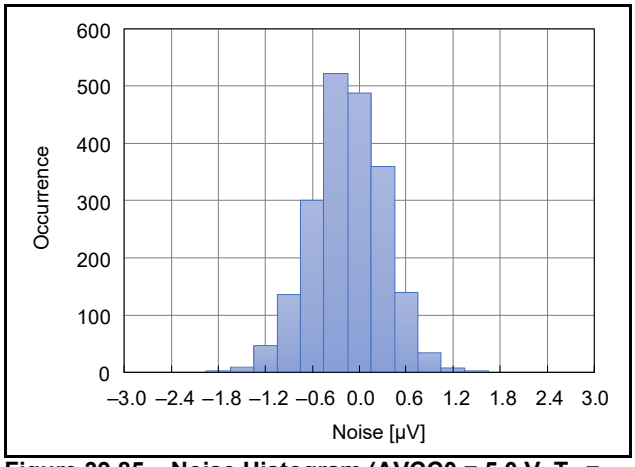

Figure 39.85 Noise Histogram (AVCC0 = 5.0 V, T_a = 25°C, Low Power Mode, Gain = 1 (PGA disabled, BUF disabled), f_{DR} = 1.9 SPS, V_{ID} = 0V, V_{REF} = 2.5V)

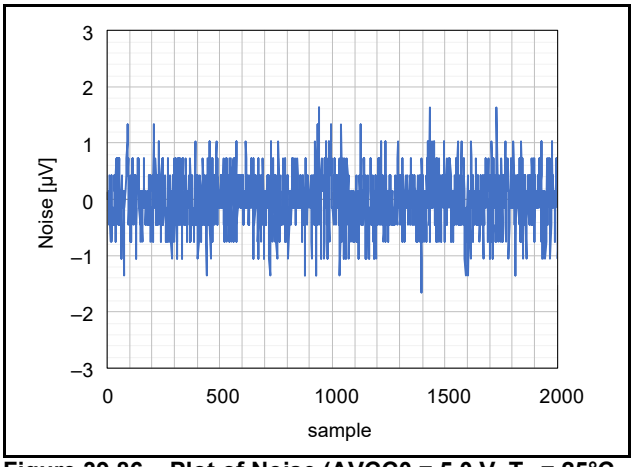

Figure 39.86 Plot of Noise (AVCC0 = 5.0 V, T_a = 25°C, Low Power Mode, Gain = 1 (PGA disabled, BUF disabled), f_{DR} = 1.9 SPS, V_{ID} = 0V, V_{REF} = 2.5V)

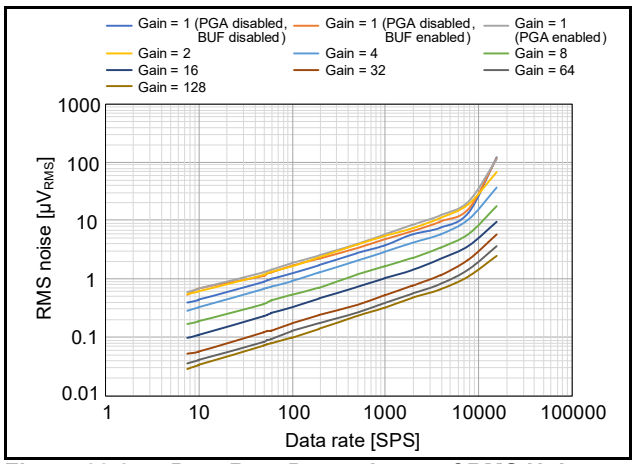

Figure 39.87 Data Rate Dependence of RMS Noise (AVCC0 = 5.0 V, T_a = 25°C, Normal Mode, V_{ID} = 0V, V_{REF} = 2.5V)

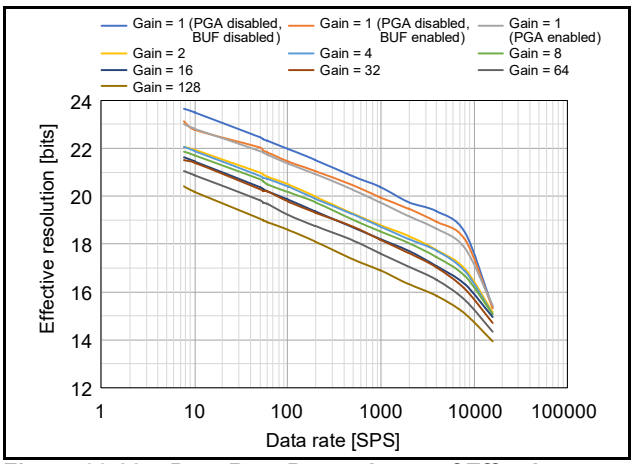

Figure 39.88 Data Rate Dependence of Effective Resolution (AVCC0 = 5.0 V, T_a = 25°C, Normal Mode, V_{ID} = 0V, V_{REF} = 2.5V)

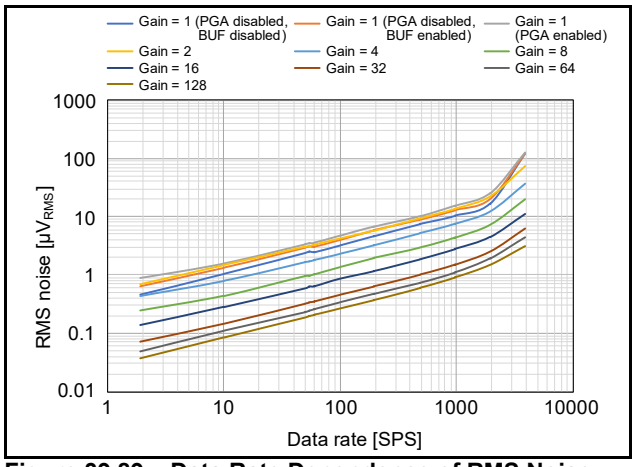

Figure 39.89 Data Rate Dependence of RMS Noise (AVCC0 = 5.0 V, T_a = 25°C, Low Power Mode, V_{ID} = 0V, V_{REF} = 2.5V)

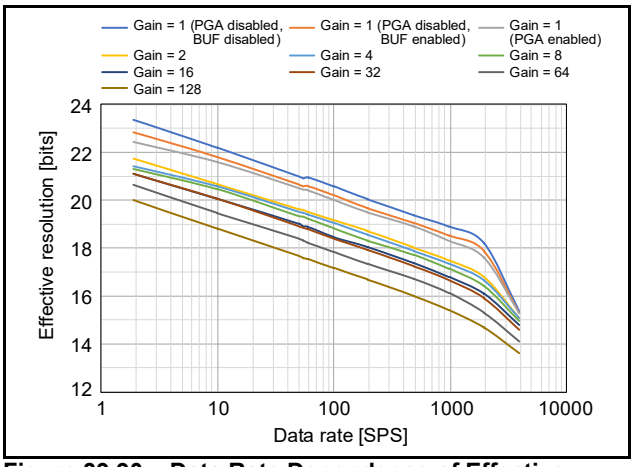

Figure 39.90 Data Rate Dependence of Effective Resolution (AVCC0 = 5.0 V, T_a = 25°C, Low Power Mode, V_{ID} = 0V, V_{REF} = 2.5V)

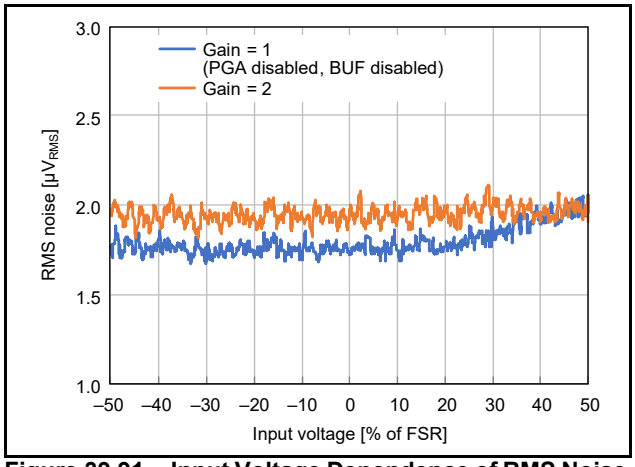

Figure 39.91 Input Voltage Dependence of RMS Noise (AVCC0 = 5.0 V, T_a = 25°C, Normal Mode, f_{DR} = 122 SPS, V_{REF} = 2.5V)

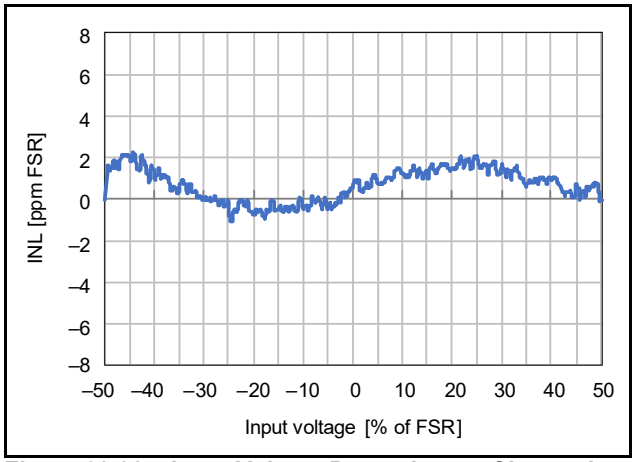

Figure 39.92 Input Voltage Dependence of Integral Non-Linearity (AVCC0 = 5.0 V, T_a = 25°C, Normal Mode, Gain = 2, OPCR.DSADLVM bit = 0, V_{REF} = 2.5V)

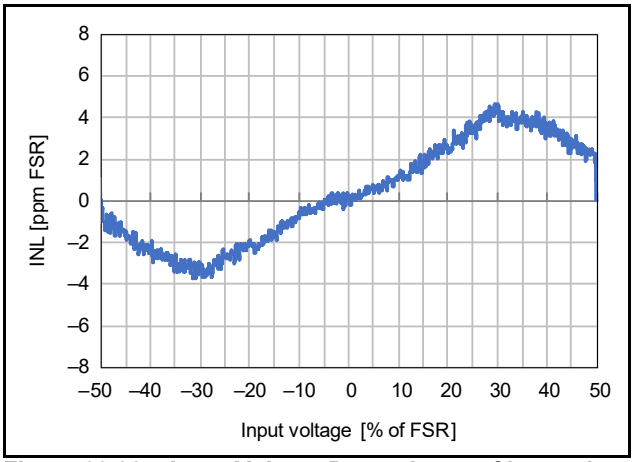

Figure 39.93 Input Voltage Dependence of Integral Non-Linearity (AVCC0 = 5.0 V, T_a = 25°C, Normal Mode, Gain = 1 (PGA disabled, BUF disabled), OPCR.DSADLVM bit = 0, V_{REF} = 2.5V)

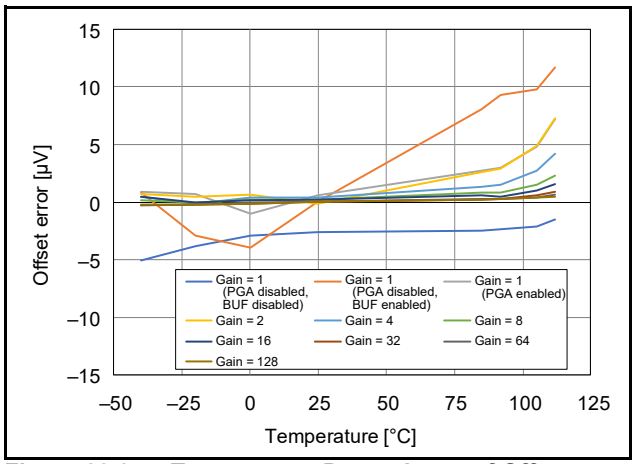

Figure 39.94 Temperature Dependence of Offset Error (AVCC0 = 5.0 V, V_{ID} = 0V, V_{REF} = 2.5V)

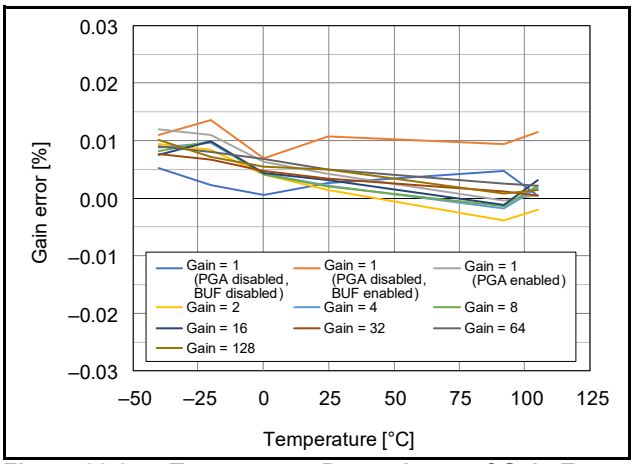

Figure 39.95 Temperature Dependence of Gain Error (AVCC0 = 5.0 V, OPCR.DSADLVM bit = 0, V_{REF} = 2.5V)

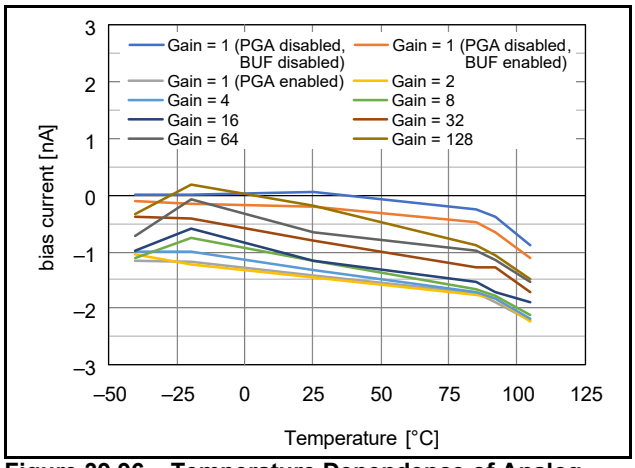

Figure 39.96 Temperature Dependence of Analog Input Bias Current (AVCC0 = 5.0 V)

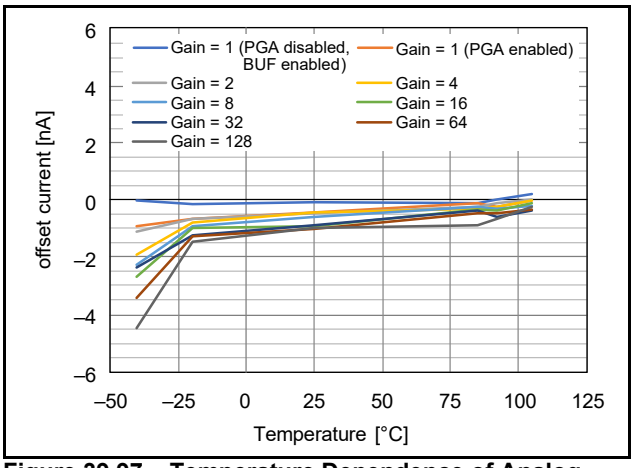

Figure 39.97 Temperature Dependence of Analog Input Offset Current (AVCC0 = 5.0 V)

39.10 Analog Front End Characteristics

Table 39.58 Voltage Reference Characteristics

Conditions: 1.8 V ≤ VCC ≤ 5.5 V, 2.7 V ≤ AVCC0 ≤ 5.5 V, VSS = AVSS0 = 0 V, T_a = –40 to +105°C

Item	Symbol	Min.	Typ.	Max.	Unit	Test Conditions
Output voltage	V_{REFOUT}	—	2.5	—	V	Figure 39.98
Initial accuracy	—	—	±0.04	—	%	Figure 39.99 T_a = 25°C
Temperature drift	—	—	10	—	ppm/°C	T_a = –40 to +85°C
		—	10	—		T_a = –40 to +105°C
Load current	I_L	—	—	±10	mA	
Load regulation	—	—	–35	–50	μV/mA	Figure 39.100 I_L= 0 to +10 mA
		—	250	400		I_L = –10 to 0 mA
Power supply rejection ratio	PSRR	70	80	—	dB	DC

Table 39.59 Bias Voltage Generator Characteristics

Conditions: 1.8 V ≤ VCC ≤ 5.5 V, 2.7 V ≤ AVCC0 ≤ 5.5 V, VSS = AVSS0 = 0 V, T_a = –40 to +105°C

Item	Symbol	Min.	Typ.	Max.	Unit	Test Conditions
Output voltage	V_{BIAS}	(AVCC0 + AVSS0)/2 – 0.02	(AVCC0 + AVSS0)/2	(AVCC0 + AVSS0)/2 + 0.02	V	
Startup time	t_{START}	—	—	20	μs/nF	

Table 39.60 Temperature Sensor Characteristics

Conditions: 1.8 V ≤ VCC ≤ 5.5 V, 2.7 V ≤ AVCC0 ≤ 5.5 V, VSS = AVSS0 = 0 V, T_a = –40 to +105°C

Item		Symbol	Min.	Typ.	Max.	Unit	Test Conditions
Accuracy		—	—	—	±5	°C	Figure 39.101
Voltage sensitivity coefficient	Second-order	TC_{SNS}	—	$–6.2 \times 10^{–13}$	—	°C/LSB^2	
	First-order		—	$7.5 \times 10^{–5}$	—	°C/LSB	
Output code		—	—	3D4F50h (4018000)	—	—	

Table 39.61 Excitation Current Source Characteristics

Conditions: 1.8 V ≤ VCC ≤ 5.5 V, 2.7 V ≤ AVCC0 ≤ 5.5 V, VSS = AVSS0 = 0 V, T_a = –40 to +105°C

Item		Symbol	Min.	Typ.	Max.	Unit	Test Conditions
Output current	2 channels mode	IEXC	50, 100, 250, 500, 750, 1000			μA	Figure 39.102
	4 channels mode		50, 100, 250, 500				
Initial accuracy		—	—	±1	±5	%	Figure 39.103 T_a = 25°C
Temperature drift		—	—	25	60	ppm/°C	
Current matching		—	—	±0.2	±2.0	%	Figure 39.104, Figure 39.105 T_a = 25°C
Drift matching		—	—	5	30	ppm/°C	Matching between IEXC0 and IEXC1 Matching between IEXC2 and IEXC3
Line regulation		—	—	0.05	0.30	%/V	
Load regulation		—	—	0.1	0.5	%/V	
Compliance voltage		V_{COMP}	AVSS0 – 0.05	—	AVCC0 – 0.5	V	Figure 39.106 Output current error = –2.0%

Table 39.62 External Reference Input Characteristics

Conditions: 1.8 V ≤ VCC ≤ 5.5 V, 2.7 V ≤ AVCC0 ≤ 5.5 V, VSS = AVSS0 = 0 V, T_a = –40 to +105°C

Item		Symbol	Min.	Typ.	Max.	Unit	Test Conditions
Differential input voltage range		V_{REF}	1	2.5	AVCC0	V	$V_{REF} = V_{(REFnP)} – V_{(REFnN)}$ (n = 0, 1)
Absolute input voltage range	Reference buffer disabled	$V_{(REF0P)}$, $V_{(REF1P)}$, $V_{(REF0N)}$, $V_{(REF1N)}$	AVSS0 – 0.05	—	AVCC0 + 0.05	V	
	Reference buffer enabled		AVSS0 + 0.1	—	AVCC0 – 0.1		
Input current	Reference buffer disabled	I_b	—	7	15	μA/V	Figure 39.107 T_a = 25°C
	Reference buffer enabled		—	±1	±3	nA	Figure 39.108 T_a = 25°C
Input current drift	Reference buffer disabled	dI_b	—	0.8	1.5	nA/V/°C	T_a = –40 to +105°C
	Reference buffer enabled		—	18	60	pA/°C	T_a = –40 to +85°C
			—	30	150	pA/°C	T_a = –40 to +105°C
Common mode rejection ratio	Reference buffer disabled	CMRR	70	90	—	dB	
	Reference buffer enabled		70	80	—		

Table 39.63 Low Side Switch Characteristics

Conditions: 1.8 V ≤ VCC ≤ 5.5 V, 2.7 V ≤ AVCC0 ≤ 5.5 V, VSS = AVSS0 = 0 V, T_a = –40 to +105°C

Item	Symbol	Min.	Typ.	Max.	Unit	Test Conditions
On-state resistance	R_{ON}	—	—	10	Ω	
Off-state leakage current	I_{lkg}	—	—	0.1	μA	
Allowable current	I_{LIMIT}	—	—	30	mA	

Table 39.64 Low Power-Supply Voltage Detector Characteristics

Conditions: 1.8 V ≤ VCC ≤ 5.5 V, 2.7 V ≤ AVCC0 ≤ 5.5 V, VSS = AVSS0 = 0 V, T_a = –40 to +105°C

Item		Symbol	Min.	Typ.	Max.	Unit	Test Conditions
Detection voltage (LVDET0)	DET0LVL = 0	V_{DET0}	1.88	2.00	2.12	V	Negative-going AVCC0
	DET0LVL = 1		1.74	1.86	1.98		
Non-responsive period (LVDET0)		t_{DET0}	—	—	20	μs	
Detection voltage (LVDET1)	DET1LVL[1:0] = 00b	V_{DET1}	2.75	2.91	3.07	V	Negative-going AVCC0
	DET1LVL[1:0] = 01b		2.65	2.82	2.99		
	DET1LVL[1:0] = 10b		3.60	3.80	4.00		
	DET1LVL[1:0] = 11b		3.50	3.70	3.90		
Non-responsive period (LVDET1)		t_{DET1}	—	—	20	μs	

Table 39.65 Input Voltage Fault Detector Characteristics

Conditions: 1.8 V ≤ VCC ≤ 5.5 V, 2.7 V ≤ AVCC0 ≤ 5.5 V, VSS = AVSS0 = 0 V, T_a = –40 to +105°C

Item	Symbol	Min.	Typ.	Max.	Unit	Test Conditions
Upper detection level for the analog input voltage	V_{IDETH}	AVCC0 + 0.05	AVCC0 + 0.2	—	V	
Lower detection level for the analog input voltage	V_{IDETL}	—	AVSS0 – 0.2	AVSS0 – 0.05	V	
Non-responsive period	t_{IDET}	—	—	20	μs	

Table 39.66 Reference Voltage Fault Detector Characteristics

Conditions: 1.8 V ≤ VCC ≤ 5.5 V, 2.7 V ≤ AVCC0 ≤ 5.5 V, VSS = AVSS0 = 0 V, T_a = –40 to +105°C

Item	Symbol	Min.	Typ.	Max.	Unit	Test Conditions
Detection level for external reference voltage differential	V_{RDET}	0.70	0.85	1.00	V	
Upper detection level for the external reference voltage	V_{RDETH}	AVCC0 – 0.5	AVCC0 – 0.4	—	V	
Lower detection level for the external reference voltage	V_{RDETL}	—	AVSS0 + 0.4	AVSS0 + 0.5	V	
Non-responsive period	t_{RDET}	—	—	20	μs	

Table 39.67 Excitation Current Source Disconnect Detector Characteristics

Conditions: 1.8 V ≤ VCC ≤ 5.5 V, 2.7 V ≤ AVCC0 ≤ 5.5 V, VSS = AVSS0 = 0 V, T_a = –40 to +105°C

Item	Symbol	Min.	Typ.	Max.	Unit	Test Conditions
Detection level for disconnection of the excitation current source	$V_{IEXCDET}$	AVCC0 – 0.18	AVCC0 – 0.06	—	V	
Non-responsive period	$t_{IEXCDET}$	—	—	20	μs	

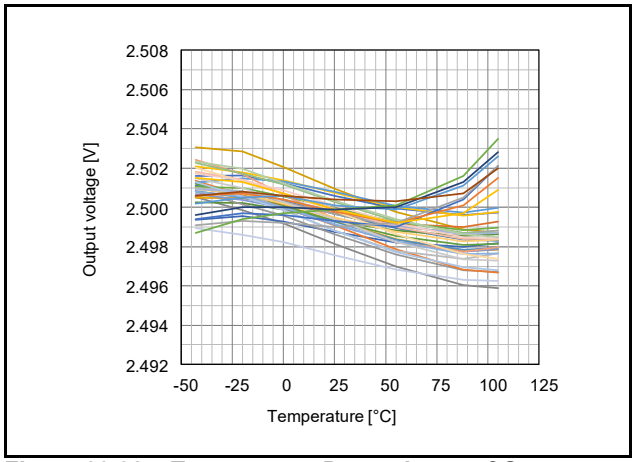

Figure 39.98 Temperature Dependence of Output Voltage of Voltage Reference (AVCC0 = 5.0 V)

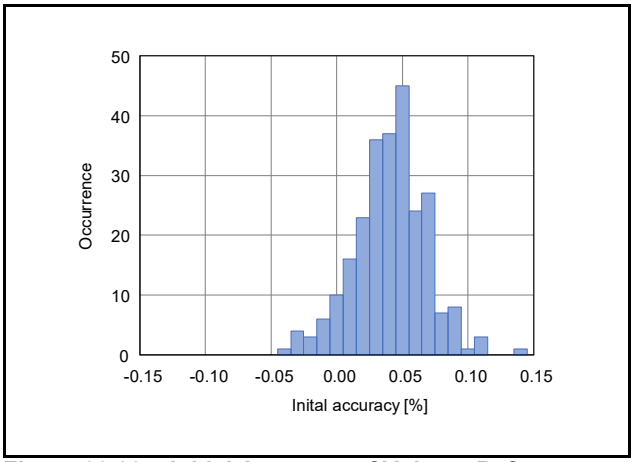

Figure 39.99 Initial Accuracy of Voltage Reference (AVCC0 = 5.0 V)

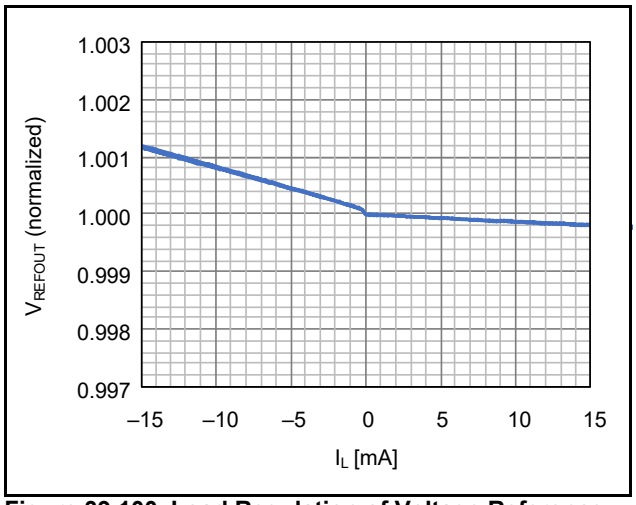

Figure 39.100 Load Regulation of Voltage Reference (AVCC0 = 5.0 V, T_a = 25°C)

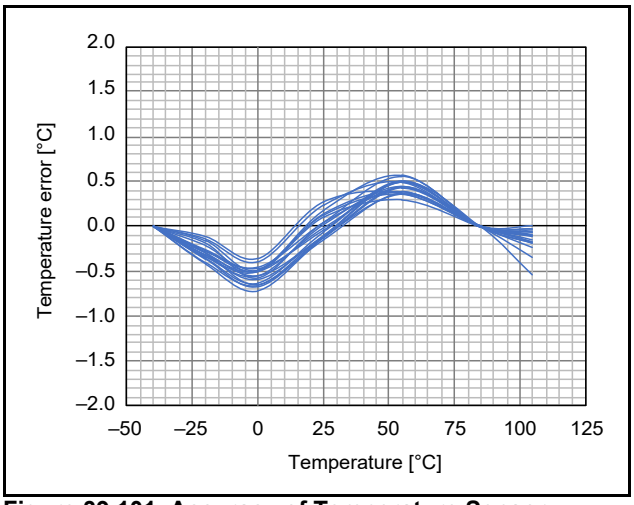

Figure 39.101 Accuracy of Temperature Sensor (AVCC0 = 5.0 V)

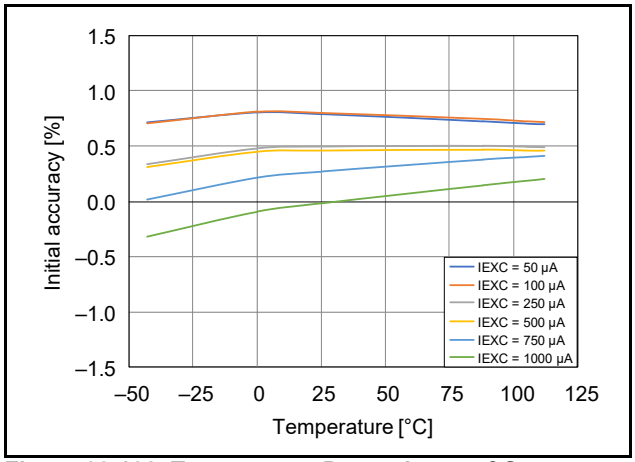

Figure 39.102 Temperature Dependence of Output Current of Excitation Current Source (AVCC0 = 5.0 V)

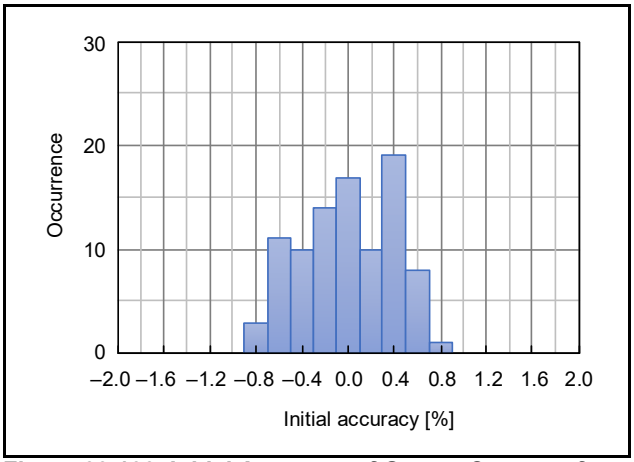

Figure 39.103 Initial Accuracy of Output Current of Excitation Current Source (AVCC0 = 5.0 V, T_a = 25°C, IEXC = 250 μA, 93 samples)

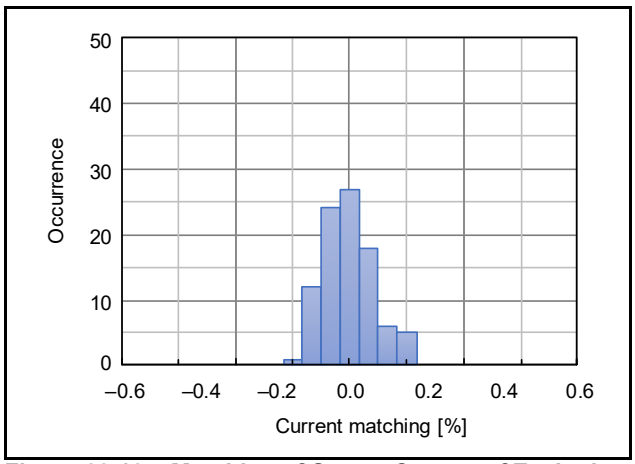

Figure 39.104 Matching of Output Current of Excitation Current Source (AVCC0 = 5.0 V, T_a = 25°C, IEXC = 250 μA, 93 samples)

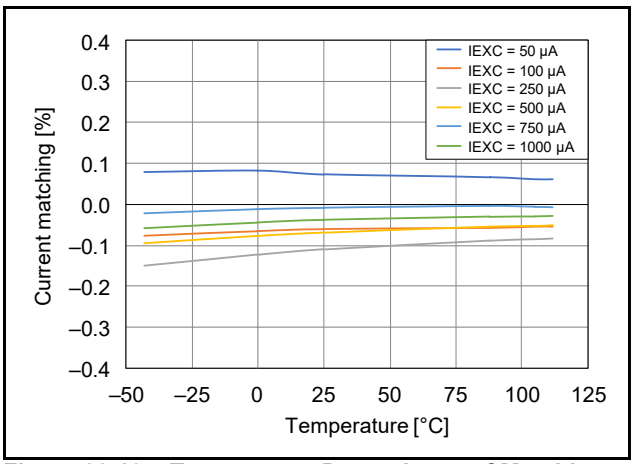

Figure 39.105 Temperature Dependence of Matching of Output Current of Excitation Current Source (AVCC0 = 5.0 V)

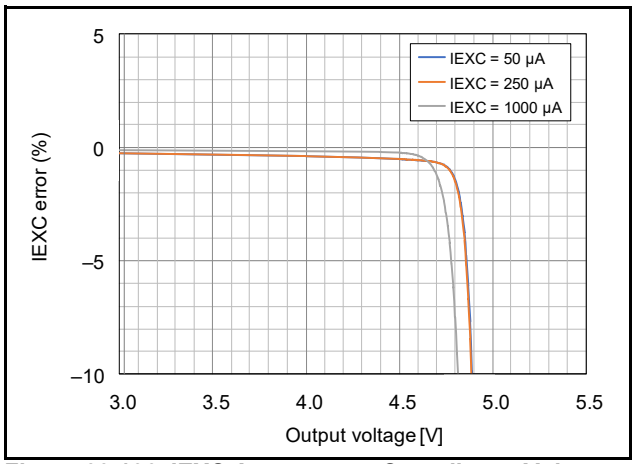

Figure 39.106 IEXC Accuracy vs Compliance Voltage (AVCC0 = 5.0 V, T_a = 25°C)

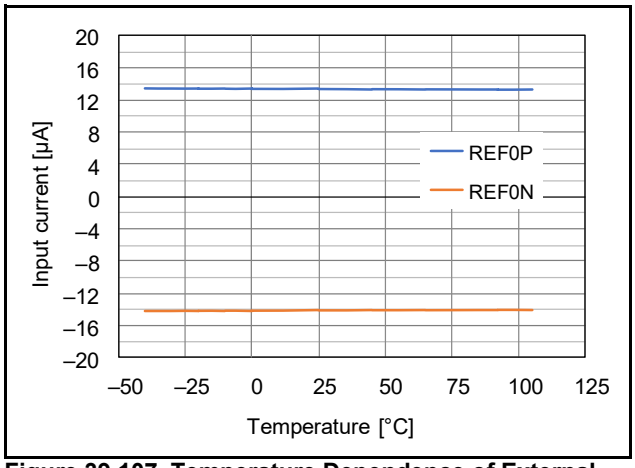

Figure 39.107 Temperature Dependence of External Reference Input Current (AVCC0 = 5.0 V, Reference Buffer Disabled)

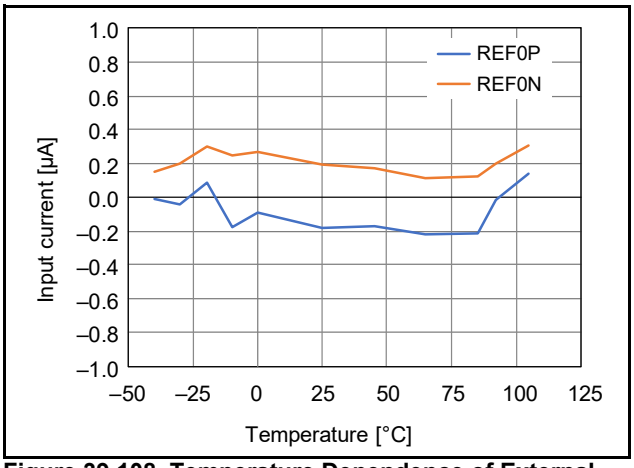

Figure 39.108 Temperature Dependence of External Reference Input Current (AVCC0 = 5.0 V, Reference Buffer Enabled)

39.11 12-Bit A/D Conversion Characteristics

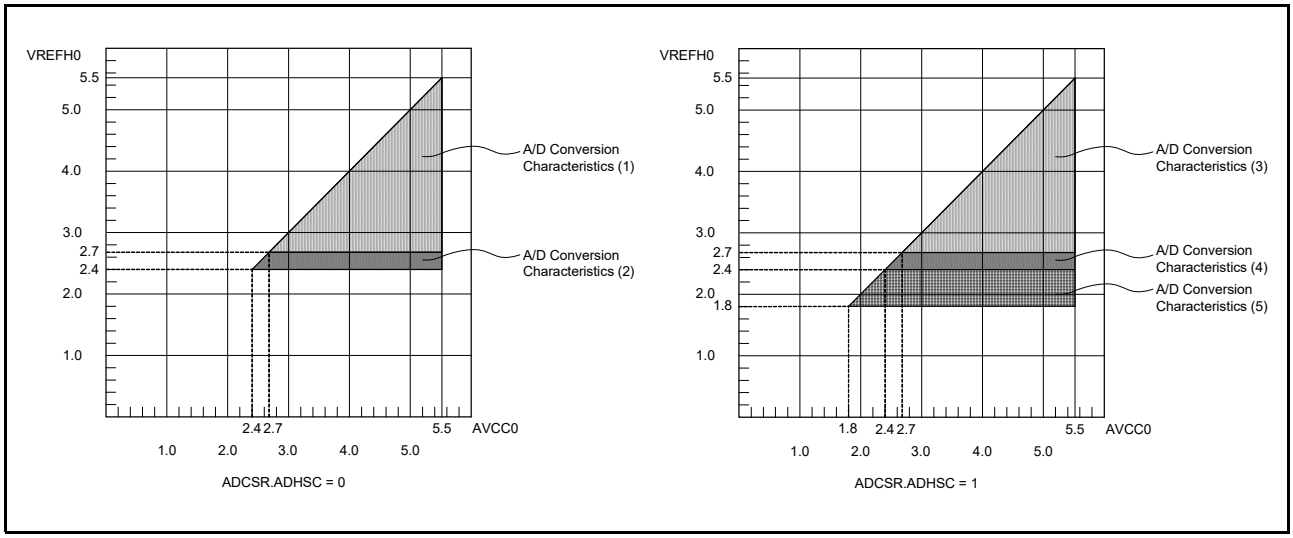

Figure 39.109 AVCC0 to VREFH0 Voltage Range

Table 39.68 12-Bit A/D Conversion Characteristics (1)

Conditions: 2.7 V ≤ VCC ≤ 5.5 V, 2.7 V ≤ AVCC0 ≤ 5.5 V, 2.7 V ≤ VREFH0 ≤ AVCC0, Reference voltage = VREFH0, VSS = AVSS0 = VREFL0 = 0 V, T_a = –40 to +105°C, Source impedance = 0.3 kΩ

Item		Min.	Typ.	Max.	Unit	Test Conditions
Frequency		1	—	32	MHz	
Resolution		—	—	12	Bit	
Conversion time*1 (Operation at PCLKD = 32 MHz)		1.41	—	—	μs	ADCSR.ADHSC bit = 0 ADSSTRn = 0Dh
Analog input capacitance	Cs	—	—	25	pF	Pin capacitance included
Analog input resistance	Rs	—	—	2.5	kΩ	
Analog input effective range		0	—	VREFH0	V	
Offset error		—	±0.5	±4.5	LSB	
Full-scale error		—	±0.75	±4.50	LSB	
Quantization error		—	± 0.5	—	LSB	
Absolute accuracy		—	±1.25	±5.00	LSB	
DNL differential nonlinearity error		—	±1.0	—	LSB	
INL integral nonlinearity error		—	±1.0	±3.0	LSB	

Note: The characteristics apply when no pin functions other than A/D converter input are used. Absolute accuracy includes quantization errors. Offset error, full-scale error, DNL differential nonlinearity error, and INL integral nonlinearity error do not include quantization errors.

Note 1. The conversion time is the sum of the sampling time and the comparison time. As the test conditions, the number of sampling states is indicated.

Table 39.69 12-Bit A/D Conversion Characteristics (2)

Conditions: 2.4 V ≤ VCC ≤ 5.5 V, 2.4 V ≤ AVCC0 ≤ 5.5 V, 2.4 V ≤ VREFH0 ≤ AVCC0, Reference voltage = VREFH0, VSS = AVSS0 = VREFL0 = 0 V, T_a = –40 to +105°C, Source impedance = 1.3 kΩ

Item		Min.	Typ.	Max.	Unit	Test Conditions
Frequency		1	—	16	MHz	
Resolution		—	—	12	Bit	
Conversion time*1 (Operation at PCLKD = 16 MHz)		2.82	—	—	μs	ADCSR.ADHSC bit = 0 ADSSTRn = 0Dh
Analog input capacitance	Cs	—	—	25	pF	Pin capacitance included
Analog input resistance	Rs	—	—	2.5	kΩ	
Analog input effective range		0	—	VREFH0	V	
Offset error		—	±0.5	±4.5	LSB	
Full-scale error		—	±0.75	±4.50	LSB	
Quantization error		—	±0.5	—	LSB	
Absolute accuracy		—	±1.25	±5.00	LSB	
DNL differential nonlinearity error		—	±1.0	—	LSB	
INL integral nonlinearity error		—	±1.0	±4.5	LSB	

Note: The characteristics apply when no pin functions other than A/D converter input are used. Absolute accuracy includes quantization errors. Offset error, full-scale error, DNL differential nonlinearity error, and INL integral nonlinearity error do not include quantization errors.

Note 1. The conversion time is the sum of the sampling time and the comparison time. As the test conditions, the number of sampling states is indicated.

Table 39.70 12-Bit A/D Conversion Characteristics (3)

Conditions: 2.7 V ≤ VCC ≤ 5.5 V, 2.7 V ≤ AVCC0 ≤ 5.5 V, 2.7 V ≤ VREFH0 ≤ AVCC0, Reference voltage = VREFH0, VSS = AVSS0 = VREFL0 = 0 V, Ta = –40 to +105°C, Source impedance = 1.1 kΩ

Item		Min.	Typ.	Max.	Unit	Test Conditions
Frequency		1	—	27	MHz	
Resolution		—	—	12	Bit	
Conversion time*1 (Operation at PCLKD = 27 MHz)		3	—	—	μs	ADCSR.ADHSC bit = 1 ADSSTRn = 28h
Analog input capacitance	Cs	—	—	25	pF	Pin capacitance included
Analog input resistance	Rs	—	—	2.5	kΩ	
Analog input effective range		0	—	VREFH0	V	
Offset error		—	±0.5	±4.5	LSB	
Full-scale error		—	±0.75	±4.50	LSB	
Quantization error		—	±0.5	—	LSB	
Absolute accuracy		—	±1.25	±5.00	LSB	
DNL differential nonlinearity error		—	±1.0	—	LSB	
INL integral nonlinearity error		—	±1.0	±3.0	LSB	

Note: The characteristics apply when no pin functions other than A/D converter input are used. Absolute accuracy includes quantization errors. Offset error, full-scale error, DNL differential nonlinearity error, and INL integral nonlinearity error do not include quantization errors.

Note 1. The conversion time is the sum of the sampling time and the comparison time. As the test conditions, the number of sampling states is indicated.

Table 39.71 12-Bit A/D Conversion Characteristics (4)

Conditions: 2.4 V ≤ VCC ≤ 5.5 V, 2.4 V ≤ AVCC0 ≤ 5.5 V, 2.4 V ≤ VREFH0 ≤ AVCC0, Reference voltage = VREFH0, VSS = AVSS0 = VREFL0 = 0 V, Ta = –40 to +105°C, Source impedance = 2.2 kΩ

Item		Min.	Typ.	Max.	Unit	Test Conditions
Frequency		1	—	16	MHz	
Resolution		—	—	12	Bit	
Conversion time*1 (Operation at PCLKD = 16 MHz)		5.06	—	—	μs	ADCSR.ADHSC bit = 1 ADSSTRn = 28h
Analog input capacitance	Cs	—	—	25	pF	Pin capacitance included
Analog input resistance	Rs	—	—	2.5	kΩ	
Analog input effective range		0	—	VREFH0	V	
Offset error		—	±0.5	±4.5	LSB	
Full-scale error		—	±0.75	±4.50	LSB	
Quantization error		—	±0.5	—	LSB	
Absolute accuracy		—	±1.25	±5.00	LSB	
DNL differential nonlinearity error		—	±1.0	—	LSB	
INL integral nonlinearity error		—	±1.0	±3.0	LSB	

Note: The characteristics apply when no pin functions other than A/D converter input are used. Absolute accuracy includes quantization errors. Offset error, full-scale error, DNL differential nonlinearity error, and INL integral nonlinearity error do not include quantization errors.

Note 1. The conversion time is the sum of the sampling time and the comparison time. As the test conditions, the number of sampling states is indicated.

Table 39.72 12-Bit A/D Conversion Characteristics (5)

Conditions: 1.8 V ≤ VCC ≤ 5.5 V, 1.8 V ≤ AVCC0 ≤ 5.5 V, 1.8 V ≤ VREFH0 ≤ AVCC0, Reference voltage = VREFH0, VSS = AVSS0 = VREFL0 = 0 V, Ta = –40 to +105°C, Source impedance = 5 kΩ

Item		Min.	Typ.	Max.	Unit	Test Conditions
Frequency		1	—	8	MHz	
Resolution		—	—	12	Bit	
Conversion time*1 (Operation at PCLKD = 8 MHz)		10.13	—	—	μs	ADCSR.ADHSC bit = 1 ADSSTRn = 28h
Analog input capacitance	Cs	—	—	25	pF	Pin capacitance included
Analog input resistance	Rs	—	—	2.5	kΩ	
Analog input effective range		0	—	VREFH0	V	
Offset error		—	±1.0	±7.5	LSB	
Full-scale error		—	±1.5	±7.5	LSB	
Quantization error		—	±0.5	—	LSB	
Absolute accuracy		—	±3.0	±8.0	LSB	
DNL differential nonlinearity error		—	±1.0	—	LSB	
INL integral nonlinearity error		—	±1.25	±3.00	LSB	

Note: The characteristics apply when no pin functions other than A/D converter input are used. Absolute accuracy includes quantization errors. Offset error, full-scale error, DNL differential nonlinearity error, and INL integral nonlinearity error do not include quantization errors.

Note 1. The conversion time is the sum of the sampling time and the comparison time. As the test conditions, the number of sampling states is indicated.

Table 39.73 12-Bit A/D Converter Channel Classification

Classification	Channel	Conditions	Remarks
Analog input channel	AN000 to AN005	AVCC0 = 1.8 to 5.5 V	

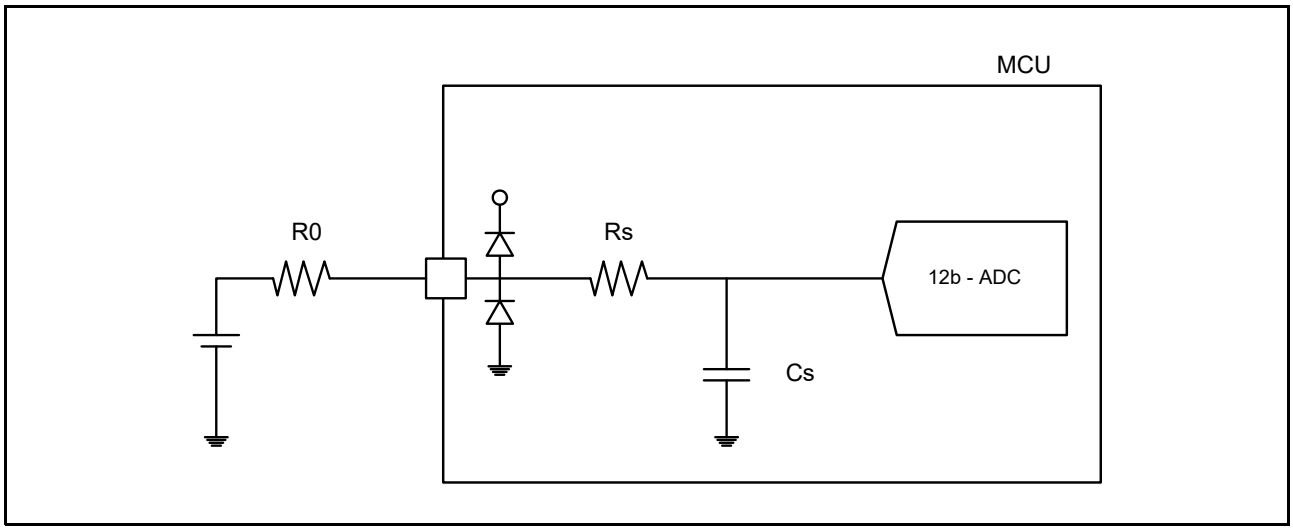

Figure 39.110 Equivalent Circuit

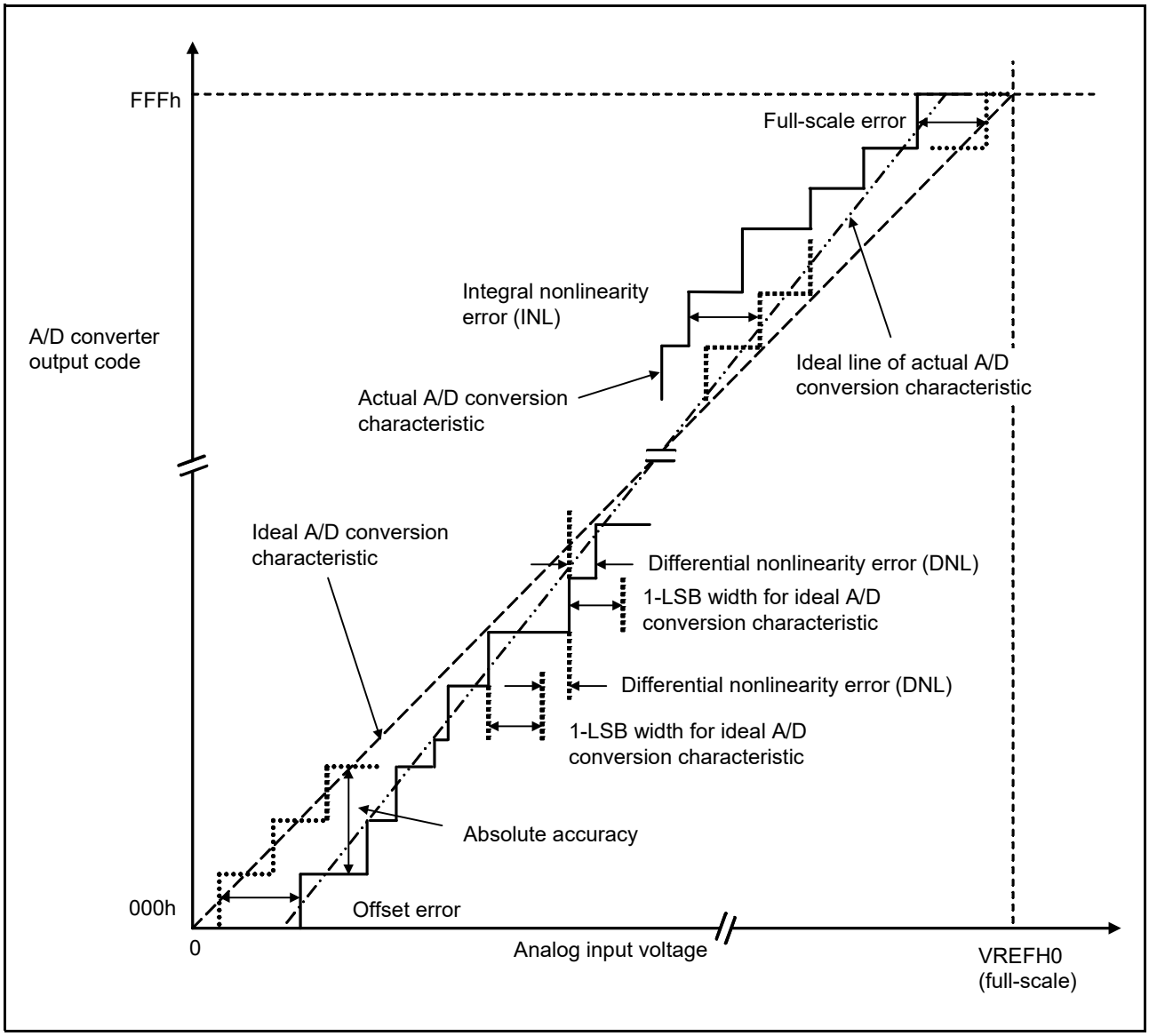

Figure 39.111 Illustration of A/D Converter Characteristic Terms

Absolute accuracy

Absolute accuracy is the difference between output code based on the theoretical A/D conversion characteristics, and the actual A/D conversion result. When measuring absolute accuracy, the voltage at the midpoint of the width of analog input voltage (1-LSB width), that can meet the expectation of outputting an equal code based on the theoretical A/D conversion characteristics, is used as an analog input voltage. For example, if 12-bit resolution is used and if reference voltage (VREFH0 = 3.072 V), then 1-LSB width becomes 0.75 mV, and 0 mV, 0.75 mV, 1.5 mV, ... are used as analog input voltages.

If analog input voltage is 6 mV, absolute accuracy = ±5 LSB means that the actual A/D conversion result is in the range of 003h to 00Dh though an output code, 008h, can be expected from the theoretical A/D conversion characteristics.

Integral nonlinearity error (INL)

Integral nonlinearity error is the maximum deviation between the ideal line when the measured offset and full-scale errors are zeroed, and the actual output code.

Differential nonlinearity error (DNL)

Differential nonlinearity error is the difference between 1-LSB width based on the ideal A/D conversion characteristics and the width of the actual output code.

Offset error

Offset error is the difference between a transition point of the ideal first output code and the actual first output code.

Full-scale error

Full-scale error is the difference between a transition point of the ideal last output code and the actual last output code.

39.12 Usage Notes

39.12.1 Connecting VCL Capacitor and Bypass Capacitors

This MCU integrates an internal voltage-down circuit, which is used for lowering the power supply voltage in the internal MCU automatically to the optimum level. A 4.7-µF capacitor needs to be connected between this internal voltage-down power supply (VCL pin) and the VSS pin. Figure 39.112 and Figure 39.113 shows how to connect external capacitors. Place an external capacitor close to the pins. Do not apply the power supply voltage to the VCL pin. Insert a multilayer ceramic capacitor as a bypass capacitor between each pair of the power supply pins. Implement a bypass capacitor as closer to the MCU power supply pins as possible. Use a recommended value of 0.1 µF as the capacitance of the capacitors. For the capacitors related to crystal oscillation, see section 9, Clock Generation Circuit. For the capacitors related to analog modules, also see section 33, Analog Front End (AFE), and section 35, 12-Bit A/D Converter (S12ADE).

For notes on designing the printed circuit board, see the descriptions of the application note, the Hardware Design Guide (R01AN1411EJ). The latest version can be downloaded from the Renesas Electronics website.

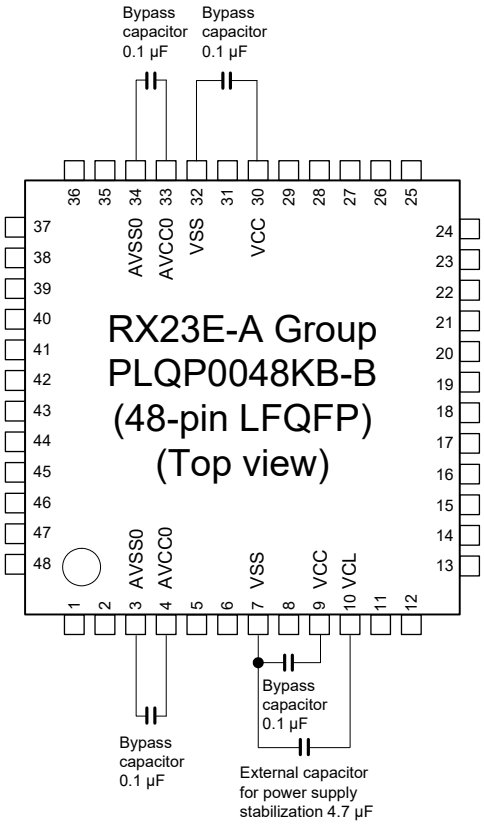

Note: Do not apply the power supply voltage to the VCL pin.
Use a 4.7-µF multilayer ceramic capacitor for the VCL pin and place it close to the pin.
A recommended value is shown for the capacitance of the bypass capacitors.

Figure 39.112 Connecting Capacitors (48 Pins)

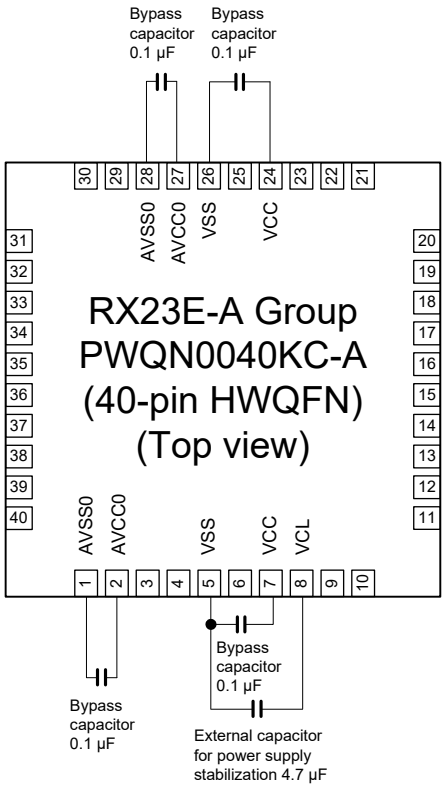

Note: Do not apply the power supply voltage to the VCL pin.
Use a 4.7-μF multilayer ceramic capacitor for the VCL pin and place it close to the pin.
A recommended value is shown for the capacitance of the bypass capacitors.

Figure 39.113 Connecting Capacitors (40 Pins)

Appendix 1. Port States in Each Processing Mode

Table 1.1 Port States in Each Processing Mode

Port Name (Pin Name)	Reset	Software Standby Mode
P14 (IRQ4)	Hi-Z	Keep-O*1
P15 (IRQ5)	Hi-Z	Keep-O*1
P16 (IRQ6)	Hi-Z	Keep-O*1
P17 (IRQ7)	Hi-Z	Keep-O*1
P26 (IRQ2)	Hi-Z	Keep-O*1
P27 (IRQ3)	Hi-Z	Keep-O*1
P30 (IRQ0)	Hi-Z	Keep-O*1
P31 (IRQ1)	Hi-Z	Keep-O*1
P35 (NMI)	Hi-Z	Hi-Z
P36	Hi-Z	Keep-O
P37	Hi-Z	Keep-O
PB0 (IRQ4)	Hi-Z	Keep-O*1
PB1	Hi-Z	Keep-O
PC4	Hi-Z	Keep-O
PC5	Hi-Z	Keep-O
PC6	Hi-Z	Keep-O
PC7	Hi-Z	Keep-O
PH0	Hi-Z	Keep-O
PH1 (IRQ0)	Hi-Z	Keep-O*1
PH2 (IRQ1)	Hi-Z	Keep-O*1
PH3	Hi-Z	Keep-O

Keep-O: Output pins retain their previous values, and input pins become high-impedance.
Hi-Z: High-impedance
Note 1. Input is enabled if the pin is specified as the software standby mode canceling source while it is used as an external interrupt pin.

Appendix 2. Package Dimensions

Information on the latest version of the package dimensions or mountings has been displayed in “Packages” on Renesas Electronics Corporation website.

JEITA Package Code	RENESAS Code	Previous Code	MASS (Typ) [g]
P-LFQFP48-7x7-0.50	PLQP0048KB-B	—	0.2

Unit: mm

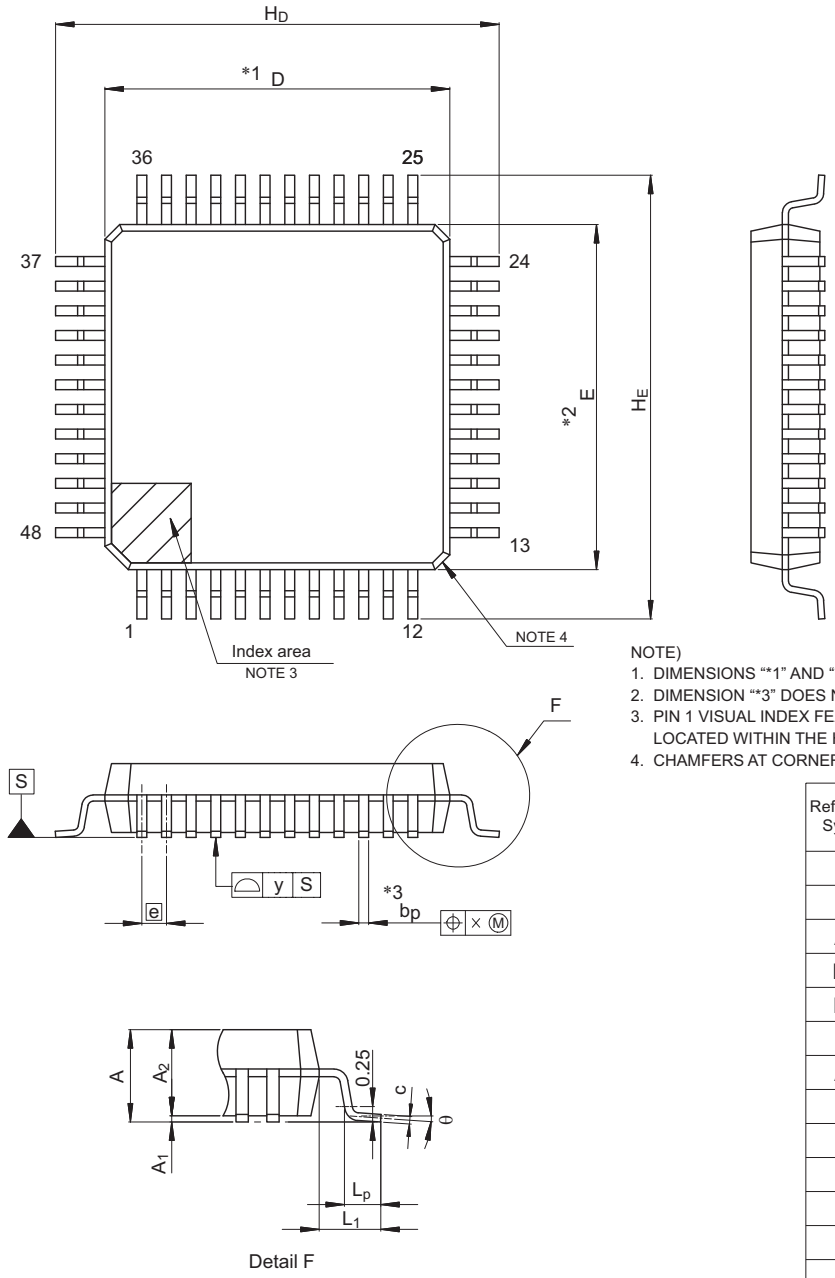

NOTE)
1. DIMENSIONS “*1” AND “*2” DO NOT INCLUDE MOLD FLASH.
2. DIMENSION “*3” DOES NOT INCLUDE TRIM OFFSET.
3. PIN 1 VISUAL INDEX FEATURE MAY VARY, BUT MUST BE LOCATED WITHIN THE HATCHED AREA.
4. CHAMFERS AT CORNERS ARE OPTIONAL, SIZE MAY VARY.

Reference Symbol	Dimensions in millimeters		
	Min	Nom	Max
D	6.9	7.0	7.1
E	6.9	7.0	7.1
A_2	—	1.4	—
H_D	8.8	9.0	9.2
H_E	8.8	9.0	9.2
A	—	—	1.7
A_1	0.05	—	0.15
b_p	0.17	0.20	0.27
c	0.09	—	0.20
θ	0°	3.5°	8°
e	—	0.5	—
x	—	—	0.08
y	—	—	0.08
L_p	0.45	0.6	0.75
L_1	—	1.0	—

Figure A 48-Pin LFQFP (PLQP0048KB-B)

JEITA Package code	RENESAS code	MASS(TYP.)[g]
P-HWQFN040-6x6-0.50	PWQN0040KD-A	0.08

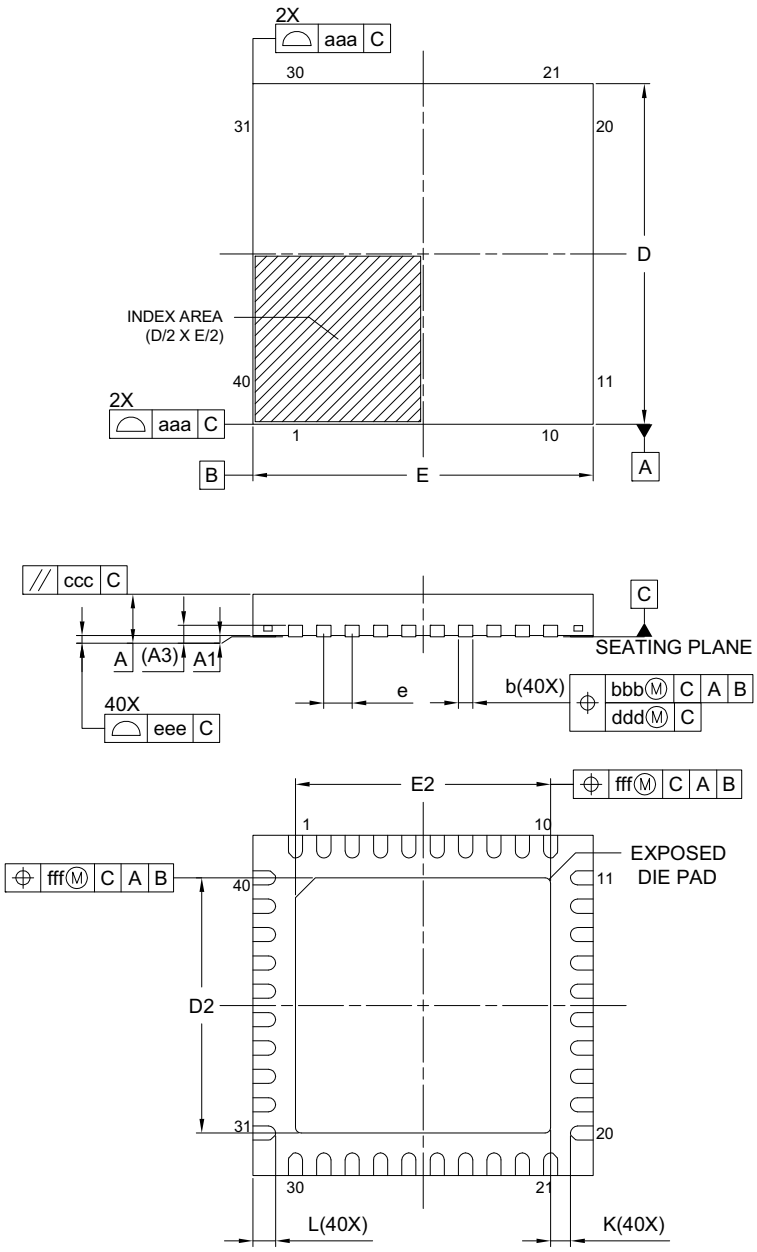

Reference Symbol	Dimension in Millimeters		
	Min.	Nom.	Max.
A	—	—	0.80
A_1	0.00	0.02	0.05
A_3	0.203 REF.		
b	0.18	0.25	0.30
D	6.00 BSC		
E	6.00 BSC		
e	0.50 BSC		
L	0.30	0.40	0.50
K	0.20	—	—
D_2	4.45	4.50	4.55
E_2	4.45	4.50	4.55
aaa	0.15		
bbb	0.10		
ccc	0.10		
ddd	0.05		
eee	0.08		
fff	0.10		

Figure B 40-Pin HWQFN (PWQN0040KD-A)

REVISION HISTORY	RX23E-A Group User's Manual: Hardware

Classifications
- Items with Technical Update document number: Changes according to the corresponding issued Technical Update
- Items without Technical Update document number: Minor changes that do not require Technical Update to be issued

Rev.	Date	Description		Classification
		Page	Summary	
1.00	Aug 30, 2019	—	First edition, issued	
1.10	Oct 09, 2020	1. Overview		
		47	Table 1.3 List of Products, changed	TN-RX*-A0253A/E
		48	Figure 1.1 How to Read the Product Part Number, changed	
		9. Clock Generation Circuit		
		180	9.7.2 Note on Rewriting the SCKCR3 Register, added	TN-RX*-A0224B/E
		18. Data Transfer Controller (DTCa)		
		344	18.2.8 DTC Vector Base Register (DTCVBR), changed	
		19. Event Link Controller (ELC)		
		371	Table 19.3 Correspondence between Values Set in ELSRn.ELS[7:0] Bits and Event Signals (1/2), changed	
		374	19.2.5 Event Link Option Setting Register C (ELOPC), changed	
		24. 8-Bit Timer (TMRa)		
		606	24.1 Overview, changed	
			Table 24.1 Specifications of TMR, changed	
		607	Table 24.2 TMR Functions, changed	
		611	24.2.1 Timer Counter (TCNT), changed	
		612	24.2.2 Time Constant Register A (TCORA), changed	
			24.2.3 Time Constant Register B (TCORB), changed	
		613	24.2.4 Timer Control Register (TCR), changed	
		26. Low-Power Timer (LPT)		
		641	Table 26.1 LPT Specifications, changed	
		642, 643	26.2.1 Low-Power Timer Control Register 1 (LPTCR1), changed	
		644	26.2.3 Low-Power Timer Control Register 3 (LPTCR3), changed	
		645, 646	26.2.4 Low-Power Timer Period Setting Register (LPTPRD), changed	
		646	Table 26.2 Example of Low-Power Timer Period Settings for IWDTCLK, changed	
		647	26.2.5 Low-Power Timer Compare Register 0 (LPCMR0), changed	
		649, 650	26.3.1 Periodic Counting Operation, changed	
		28. Serial Communications Interface (SCIg, SCIh)		
		672	Table 28.1 SCIg Specifications (1/2), changed	
		674	Table 28.2 SCIh Specifications (2/2), changed	
		688	28.2.8 Serial Control Register (SCR), changed	
		688 to 694	(1) Non-Smart Card Interface Mode (SCMR.SMIF = 0), changed	
		694 to 696	(2) Smart Card Interface Mode (SCMR.SMIF = 1), changed	
		697, 698	28.2.10 Smart Card Mode Register (SCMR)	
		708 to 710	28.2.13 Serial Extended Mode Register (SEMR), Note 1, changed	
		731	28.3.2 Receive Data Sampling Timing and Reception Margin in Asynchronous Mode, Note 1, changed	
		734	28.3.6 SCI Initialization (Asynchronous Mode), changed	
			Figure 28.8 Sample SCI Initialization Flowchart (Asynchronous Mode), changed	
		740 to 743	28.3.8 Serial Data Reception (Asynchronous Mode), changed	
		741	Table 28.28 Status Flags in the SSR Register and Receive Data Handling, changed	
		750	28.5.2 CTS and RTS Functions, changed	
		751	28.5.3 SCI Initialization (Clock Synchronous Mode), changed	
			Figure 28.24 Example of SCI Initialization Flowchart (Clock Synchronous Mode), changed	
		756, 758	28.5.5 Serial Data Reception (Clock Synchronous Mode), changed	

Rev.	Date	Description		Classification
		Page	Summary	
1.10	Oct 09, 2020	758	Figure 28.31 Example Flowchart of Serial Reception in Clock Synchronous Mode, changed	
		759	Figure 28.32 Example Flowchart of Simultaneous Serial Transmission and Reception in Clock Synchronous Mode, changed	
		762	28.6.3 Block Transfer Mode, changed	
		764	Figure 28.38 Example of SCI Initialization Flowchart (Smart Card Interface Mode), changed	
		766 to 768	28.6.6 Serial Data Transmission (Except in Block Transfer Mode), changed	
		769, 770	28.6.7 Serial Data Reception (Except in Block Transfer Mode), changed	
		777	Figure 28.51 Example of the Flowchart of SCI Initialization (for Simple I2C Mode), changed	
		779	Figure 28.54 Example of the Procedure for Master Transmission Operations in Simple I2C Mode (with Transmission Interrupts and Reception Interrupts in Use), changed	
		786	28.8.5 SCI Initialization (Simple SPI Mode), changed	
		803	Figure 28.75 Block Diagram of Digital Noise Filter, Title, changed	
		804	28.12.2 Interrupts in Asynchronous Mode, Clock Synchronous Mode, and Simple SPI Mode, changed	
		816	Figure 28.82 Example of Flowchart for Receive Error Handling (during Reception of the Start Frame), changed	
		29. I2C-bus Interface (RIICa)		
		818	29.1 Overview, changed	
			Table 29.1 RIIC Specifications (1/2), changed	
		819	Table 29.1 RIIC Specifications (2/2), changed	
			Figure 29.1 RIIC Block Diagram, changed	
		820	Figure 29.2 I/O Pin Connection to the External Circuit (I2C-bus Configuration Example), changed	
		821, 822	29.2.1 I2C-bus Control Register 1 (ICCR1), changed	
		823 to 826	29.2.2 I2C-bus Control Register 2 (ICCR2), changed	
		827	29.2.3 I2C-bus Mode Register 1 (ICMR1), changed	
		828, 829	29.2.4 I2C-bus Mode Register 2 (ICMR2), changed	
		830, 831	29.2.5 I2C-bus Mode Register 3 (ICMR3), changed	
		832, 833	29.2.6 I2C-bus Function Enable Register (ICFER), changed	TN-RX*-A0227A/E
		838 to 840	29.2.9 I2C-bus Status Register 1 (ICSR1), changed	
		841 to 843	29.2.10 I2C-bus Status Register 2 (ICSR2), changed	TN-RX*-A0227A/E
		844	29.2.11 Slave Address Register Ly (SARLy) (y = 0 to 2), changed	
		845	29.2.12 Slave Address Register Uy (SARUy) (y = 0 to 2), changed	
		846	29.2.13 I2C-bus Bit Rate Low-Level Register (ICBRL)	
		847, 848	29.2.14 I2C-bus Bit Rate High-Level Register (ICBRH), changed	
		848	Table 29.5 Examples of ICBRH/ICBRL Settings for Transfer Rate, changed	
		849	29.2.16 I2C-bus Receive Data Register (ICDRR), changed	
		850 to 864	29.3 Operation, changed	
		850	Figure 29.4 I2C-bus Timing (SLA = 7 Bits), changed	
		852, 855	29.3.3 Master Transmit Operation, changed	
		853	Figure 29.6 Example of Master Transmission Flowchart, changed	
		855 to 858	29.3.4 Master Receive Operation, changed	
		857	Figure 29.10 Example of Master Reception (7-Bit Address Format, 1 or 2 bytes), changed	
		858	Figure 29.11 Example of Master Reception (7-Bit Address Format, 3 Bytes or More), changed	
		861, 862	29.3.5 Slave Transmit Operation, changed	
		862	Figure 29.15 Example of Slave Transmission, changed	
		864	29.3.6 Slave Receive Operation, changed	
		866	29.4 SCL Synchronization Circuit, changed	
			Figure 29.21 Generation and Synchronization of the SCL Signal from the RIIC, changed	
		867	29.5 SDA Output Delay Function, changed	
			Figure 29.22 SDA Output Delay Function, changed	
		868	29.6 Digital Noise Filters, changed	
			Figure 29.23 Block Diagram of the Digital Noise Filter, changed	

Rev.	Date	Description		Classification
		Page	Summary	
1.10	Oct 09, 2020	869, 870	29.7.1 Slave-Address Match, changed	
		871	29.7.2 Detection of the General Call Address, changed	
		872, 873	29.7.3 Device-ID Address Detection, changed	TN-RX*-A0227A/E
		873	Figure 29.28 Set/Clear Timing of the AASy and DID Flags during Reception of Device-ID Address, changed	
		874	29.7.4 Host Address Detection, changed	
		875	29.8.1 Function to Prevent Wrong Transmission of Transmit Data, changed	
		876	29.8.2 NACK Reception Transfer Suspension Function, changed	TN-RX*-A0227A/E
			Figure 29.31 Suspension of Data Transmission When NACK is Received (NACKE = 1), changed	
		877	29.8.3 Function to Prevent Failure to Receive Data, changed	
		879 to 882	29.9 Arbitration-Lost Detection Functions, changed	
		879, 880	29.9.1 Master Arbitration-Lost Detection (MALE Bit), changed	
		880	Figure 29.34 Arbitration-Lost When a Start Condition is Generated (MALE = 1), Title, changed	
		881, 882	29.9.2 Function to Detect Loss of Arbitration during NACK Transmission (NALE Bit), changed	
		882	29.9.3 Slave Arbitration-Lost Detection (SALE Bit), changed	
		883, 884	29.10 Start Condition/Restart Condition/Stop Condition Generating Function, changed	
		885 to 880	29.11 Bus Hanging, changed	
		886	Figure 29.39 Timeout Function, changed	
		887	29.11.2 Additional SCL Output Function	TN-RX*-A0227A/E
			Conditions for using the ICCR1.CLO bit, changed	
			Figure 29.40 Additional SCL Output Function (CLO Bit), changed	TN-RX*-A0227A/E
		888	29.11.3 RIIC Reset and Internal Reset, changed	
		889, 890	29.12 SMBus Operation, changed	
		889, 890	29.12.1 SMBus Timeout Measurement, changed	
		890	Figure 29.41 SMBus Timeout Measurement, changed	
			29.12.2 Packet Error Code (PEC), changed	
		891	29.13 Interrupt Sources, changed	
		892	29.14 Initialization of Registers and Functions When a Reset is Applied or a Condition is Detectedhe, changed	
			Table 29.7 Reset States of Registers and Functions When a Reset is Applied or a Condition is Detected, changed	TN-RX*-A0227A/E
		31. Serial Peripheral Interface (RSPIb)		
		1007 to 1009	31.1 Overview, changed	
		1007, 1008	Table 31.1 RSPI Specifications, changed	
		1009	Figure 31.1 RSPI Block Diagram, changed	
		1011, 1012	31.2.1 RSPI Control Register (SPCR), changed	
		1013	31.2.2 RSPI Slave Select Polarity Register (SSLP), changed	
		1014	31.2.3 RSPI Pin Control Register (SPPCR), changed	
		1024, 1025	31.2.9 RSPI Data Control Register (SPDCR), changed	
		1027	31.2.11 RSPI Slave Select Negation Delay Register (SSLND), changed	
		1029	31.2.13 RSPI Control Register 2 (SPCR2), changed	
		1030 to 1032	31.2.14 RSPI Command Register m (SPCMDm) (m = 0 to 7), changed	
		1033	Table 31.5 Relationship between RSPI Modes and SPCR Settings and Description of Each Mode, changed	
		1034	31.3.2 Controlling RSPI Pins, changed	
		1043	31.3.4.1 When Parity is Disabled (SPCR2.SPPE = 0) (2) MSB First Transfer (24-Bit Data), changed	
		1045	(4) LSB First Transfer (24-Bit Data), changed	
		1047	31.3.4.2 When Parity is Enabled (SPCR2.SPPE = 1) (2) MSB First Transfer (24-Bit Data), changed	
		1052, 1053	31.3.6 Communications Operating Mode, changed	
		1052	31.3.6.1 Full-Duplex Communications (SPCR.TXMD = 0), changed	
			Figure 31.24 Operation Example of SPCR.TXMD = 0, changed	
		1053	31.3.6.2 Transmit-only Simplex Communications (SPCR.TXMD = 1), changed	
		1054, 1055	31.3.7 Transmit Buffer Empty/Receive Buffer Full Interrupts, changed	

Rev.	Date	Description		Classification
		Page	Summary	
1.10	Oct 09, 2020	1055	31.3.8 Idle Interrupt, added	
		1056	Table 31.8 Relationship between Non-Normal Transfer Operations and RSPI Error Detection Function, changed	
		1057, 1058	31.3.9.1 Overrun Error, changed	
		1059	31.3.9.2 Parity Error, changed	
		1060	31.3.9.3 Mode Fault Error, changed	
			31.3.9.4 Underrun Error, changed	
		1061	31.3.10.1 Initialization by Clearing the SPE Bit, changed	
		1065	31.3.11.1 Master Mode Operation (4) Burst Transfer, changed	
		1066	(5) RSPCK Delay (t1), changed	
			(6) SSL Negation Delay (t2), changed	
		1067	(7) Next-Access Delay (t3), changed	
		1068	Figure 31.35 Example of Initialization Flowchart in Master Mode (SPI Operation), changed	
		1069	(9) Software Processing Flow (a) Transmit Processing Flow, changed	
		1070	(b) Receive Processing Flow, changed	
		1071	(c) Flow of Error Processing, changed	
		1074	31.3.11.2 Slave Mode Operation (6) Software Processing Flow (b) Receive Processing Flow, changed	
		1075	(c) Flow of Error Processing, changed	
		1076 to 1081	31.3.12 Clock Synchronous Operation, changed	
		1080	31.3.12.1 Master Mode Operation (5) Flow of Software Processing, changed	
		1081	31.3.12.2 Slave Mode Operation (4) Flow of Software Processing, changed	
		1083	Figure 31.49 Flowchart for Self-Diagnosis of Parity Circuit, changed	
		1084	31.3.15 Interrupt Sources, changed	
			Table 31.13 Interrupt Sources of RSPI, changed	
		1085	31.4.3 Mode Fault, Underrun, Overrun, or Parity Error Event Output, changed	
		1086	31.4.4 Idle Event Output, changed	
			31.4.5 Transmit End Event Output, changed	
		36. Data Operation Circuit (DOC)		
		1250 to 1256	Full review	
		39. Electrical Characteristics		
		1372 to 1384	39.4.5 Timing of On-Chip Peripheral Modules, Layout changed	
		Appendix 2. Package		
		1419	Figure C 40-Pin HWQFN (PWQN0040KD-A), added	TN-RX*-A0253A/E
1.20	Apr 20, 2022	Features		
		41	Package type, changed	
		41	Analog functions, changed	TN-RX*-A0255A/E
		1. Overview		
		45	Table 1.1 Outline of Specifications (4/4), changed	
		47	Table 1.3 List of Products, changed	
		3. Operating Modes		
		85	3.1 Operating Mode Types and Selection, changed	
		6. Resets		
		118	Table 6.2 Targets Initialized by Each Reset Source	
		8. Voltage Detection Circuit (LVDAb)		
		145	8.2.8 Voltage Monitoring 2 Circuit Control Register 0 (LVD2CR0), changed	
		10. Clock Frequency Accuracy Measurement Circuit (CAC)		
		190, 191	10.3.1 Measuring Clock Frequency, changed	
		14. Interrupt Controller (ICUb)		
		226	Table 14.1 Specifications of Interrupt Controller, changed	

Rev.	Date	Description		Classification
		Page	Summary	
1.20	Apr 20, 2022	22. Multi-Function Timer Pulse Unit 2 (MTU2a)		
		All	Term correction A/D converter → A/D conversion	
		409	Table 22.2 MTU Functions (1/3), changed	
		436	22.2.18 Timer Output Control Register 1 (TOCR1), changed	
		488	Table 22.52 Output Pins for Reset-Synchronized PWM Mode, changed	
		496	Figure 22.40 Example of Operation in Complementary PWM Mode, changed	
		498	Figure 22.41 Example of Operation without Dead Time, changed	
		499	Figure 22.42 Example of PWM Cycle Updating, changed	
		500	Figure 22.43 Example of Data Updating in Complementary PWM Mode, changed	
		532	22.4.2 DTC/DMAC Trigger Sources, changed	
		532, 533	22.4.3 A/D Converter Trigger Source, changed	
		554	22.6.21 Interrupts during Periods in the Module Stop State, changed	
		28. Serial Communications Interface (SCIg, SCIh)		
		751	Figure 28.24 Example of SCI Initialization Flowchart (Clock Synchronous Mode), changed	
		29. I^{2}C-bus Interface (RIICa)		
		All	Term correction Transmit → Transmission	
		821, 822	29.2.1 I^{2}C-bus Control Register 1 (ICCR1), changed	
		852	29.3.3 Master Transmit Operation (5), changed	
		853	Figure 29.5 Example of Master Transmission Flowchart, changed	
		854	Figure 29.7 Master Transmit Operation Timing (2) (10-Bit Address Format), changed	
		859	Figure 29.12 Master Receive Operation Timing (2) (10-Bit Address Format, When RDRFS bit is 0), changed	
		860	Figure 29.13 Master Receive Operation Timing (3) (When RDRFS bit is 0), changed	
		864	29.3.6 Slave Receive Operation (4), changed	
		31. Serial Peripheral Interface (RSPIb)		
		1033, 1034	Table 31.5 Relationship between Pin States and Bit Settings was merged into Table 31.6 Relationship between RSPI Modes and SPCR Settings and Description of Each Mode.	
		1068	Figure 31.35 Example of Initialization Flowchart in Master Mode (SPI Operation), changed	
		1079	Figure 31.46 Example of Initialization Flowchart in Master Mode (Clock Synchronous Operation), changed	
		33. Analog Front End (AFE)		
		1096	Table 33.2 AFE Specifications, changed	TN-RX*-A0255A/E
		1124	33.3.6.2 DSAD Input Voltage Fault Detector (DSIDET), changed	
		1129	33.4.5 Notes on Setting the Analog Power Supply Pins, changed	
		34. 24-bit Delta-Sigma A/D Converters (DSADA)		
		1135, 1136	34.2.2 DSAD Operating Mode Register (MR), changed	
		1171	34.5.6 Notes on Using Two DSAD units, added	TN-RX*-A0254A/E
		35. 12-Bit A/D Converter (S12ADE)		
		All	Term correction PCLK → PCLKB	
		1235	35.3.5.2 ELC Output of Compare Function (2), changed	
		1245	35.7 Allowable Impedance of Signal Source	
		1247	35.8.3 A/D Conversion Restarting Timing and Termination Timing, changed	
		38. Flash Memory (FLASH)		
		1272, 1273	38.4.10 Flash Extra Area Control Register (FEXCR), changed	
		1280	38.4.20 Flash Start-Up Setting Monitor Register (FSCMR), changed	
		1285	Figure 38.7 Procedure for Transition from E2 DataFlash Access Disabled Mode to ROM/E2 DataFlash Read Mode, changed	

Rev.	Date	Description		Classification
		Page	Summary	
1.20	Apr 20, 2022	1299	Figure 38.20 Procedure to Issue the Start-Up Area Information Program Command/Access Window Information Program Command, changed	
		1316	38.10.6.2 Operating Frequency Select • Bit rate selection error, changed	
		1318	38.10.8.1 User/Data Area Program Preparation, changed	
		1320	38.10.8.3 Data Area Program, changed	
		39. Electrical Characteristics		
		1405	Table 39.58 Voltage Reference Characteristics, changed	TN-RX*-A0255A/E
		1408	Figure 39.98 Temperature Dependence of Output Voltage of Voltage Reference (AVCC0 = 5.0 V), changed	
		1408	Figure 39.99 Initial Accuracy of Voltage Reference (AVCC0 = 5.0 V), changed	
		Appendix 2. Package Dimensions		
		—	Figure B 40-Pin HWQFN (PWQN0040KC-A), deleted	
1.30	Dec 25, 2024	1. Overview		
		50	Figure 1.3 Analog Block Diagram, added	
		3. Operating Modes		
		86	3.1 Operating Mode Types and Selection, changed	
		86	Table 3.1 Selection of Operating Modes by the Mode-Setting Pins, changed	
		88	3.2.2 System Control Register 1 (SYSCR1), changed	
		89	3.3.3 Boot Mode (FINE Interface), added	
		90	Figure 3.1 Mode-Setting Pin Levels and Operating Modes, changed	
		5. I/O Registers		
		95	Table 5.1 List of I/O Registers (Address Order) (1/23), changed	
		98	Table 5.1 List of I/O Registers (Address Order) (4/23), changed	
		115	Table 5.1 List of I/O Registers (Address Order) (21/23), changed	
		8. Voltage Detection Circuit (LVDAb)		
		136	Table 8.1 LVD Specifications, changed	
		145	8.2.7 Voltage Monitoring 1 Circuit Control Register 0 (LVD1CR0), changed	
		146	8.2.8 Voltage Monitoring 2 Circuit Control Register 0 (LVD2CR0), changed	
		10. Clock Frequency Accuracy Measurement Circuit (CAC)		
		183	10.1 Overview, changed	
		14. Interrupt Controller (ICUb)		
		227	Table 14.1 Specifications of Interrupt Controller	
		260	14.5 Non-maskable Interrupt Operation, changed	
		261	14.6.2 Return from Software Standby Mode, changed	
		19. Event Link Controller (ELC)		
		371	Table 19.2 Correspondence between the ELSRn Register and the Peripheral Modules, changed	
		372, 373	Table 19.3 Correspondence between Values Set in ELSRn.ELS[7:0] Bits and Event Signals, changed	
		—	19.4.1 Setting ELSRn Register (3) Setting ELSR24 and ELSR25 Registers, deleted	
		20. I/O Ports		
		386	Figure 20.2 I/O Port Configuration (2), changed	
		24. 8-Bit Timer (TMRa)		
		628	24.7.2 TMR Operation when Receiving an Event Signal from ELC (1) Count Start, changed	
		27. Independent Watchdog Timer (IWDTa)		
		654	Opening section, changed	
		654	27.1 Overview, changed	
		654	Table 27.1 IWDT Specifications, changed	
		655	Figure 27.1 IWDT Block Diagram, changed	
		657 to 659	27.2.2 IWDT Control Register (IWDTCR), changed	
		660	27.2.3 IWDT Status Register (IWDTSR), changed	
		661	27.2.4 IWDT Reset Control Register (IWDTRCR), changed	
		662	27.2.5 IWDT Count Stop Control Register (IWDTCSTPR), changed	
		663	27.3.1.1 Register Start Mode, changed	

Rev.	Date	Description		Classification
		Page	Summary	
1.30	Dec 25, 2024	664	Figure 27.3 Operation Example in Register Start Mode, changed	
		665	27.3.1.2 Auto-Start Mode, changed	
		665	Figure 27.4 Operation Example in Auto-Start Mode, changed	
		—	27.3.2 Control over Writing to the IWDTCR, IWDTRCR, and IWDTCSTPR Registers, deleted	
		666	27.3.2 Refresh Operation, changed	
		667	Figure 27.5 IWDT Refresh Operation Waveforms (IWDTCR.CKS[3:0] = 0000b, IWDTCR.TOPS[1:0] = 10b), changed	
		668	27.3.4 Reset Output, changed	
		668	27.3.5 Interrupt Sources, changed	
		668	Table 27.4 IWDT Interrupt Source, changed	
		669	27.3.6 Reading the Counter Value, changed	
		669	Figure 27.6 Processing for Reading IWDT Counter Value (IWDTCR.CKS[3:0] = 0000b, IWDTCR.TOPS[1:0] = 10b), changed	
		28. Serial Communications Interface (SCIg, SCIh)		
		701	Table 28.15 Maximum Bit Rate for Each Operating Frequency (Asynchronous Mode), changed	
		705	Table 28.22 BRR Settings for Various Bit Rates (Simple I^{2}C Mode), changed	
		705	Table 28.23 Minimum Widths at High and Low Level for SCL at Various Bit Rates (Simple I^{2}C Mode), changed	
		34. 24-bit Delta-Sigma A/D Converters (DSADA)		
		1143	34.2.7 Data Register (DR), changed	
		1158	34.3.7.2 Settling Time, changed	
		35. 12-Bit A/D Converter (S12ADE)		
		1189	Table 35.6 Selection of A/D Activation Sources by the TRSB[5:0] Bits, changed	
		1189	Table 35.7 Selection of A/D Activation Sources by the TRSA[5:0] Bits, changed	
		1198	Figure 35.3 Explanation of Compare Function Window A Comparison Conditions, changed	
		1207	Figure 35.4 Explanation of Compare Function Window B Compare Conditions, changed	
		1251	35.8.14 Notes on Setting the Reference Voltage, changed	
		39. Electrical Characteristics		
		1342	Table 39.2 Recommended Operating Conditions (1), changed	
		1342	Table 39.3 Recommended Operating Conditions (2), changed	TN-RX*-A0269A/E
		1357	Table 39.21 Thermal Resistance Value (Reference), changed	
		1379	Table 39.38 Timing of RIIC, changed	
		1381	Figure 39.61 RIIC Bus Interface Input/Output Timing and Simple I^{2}C Bus Interface Input/Output Timing, changed	

RX23E-A Group User's Manual: Hardware

Publication Date: Rev.1.00 Aug 30, 2019
Rev.1.30 Dec 25, 2024

Published by: Renesas Electronics Corporation

RX23E-A Group

Renesas Electronics Corporation

R01UH0801EJ0130