User's Manual

16

RL78/G1F

User's Manual: Hardware

16-Bit Single-Chip Microcontrollers

All information contained in these materials, including products and product specifications, represents information on the product at the time of publication and is subject to change by Renesas Electronics Corp. without notice. Please review the latest information published by Renesas Electronics Corp. through various means, including the Renesas Electronics Corp. website (http://www.renesas.com).

Renesas Electronics
www.renesas.com

Rev.1.30 Apr 2024

Notice

1. Descriptions of circuits, software and other related information in this document are provided only to illustrate the operation of semiconductor products and application examples. You are fully responsible for the incorporation or any other use of the circuits, software, and information in the design of your product or system. Renesas Electronics disclaims any and all liability for any losses and damages incurred by you or third parties arising from the use of these circuits, software, or information.
2. Renesas Electronics hereby expressly disclaims any warranties against and liability for infringement or any other claims involving patents, copyrights, or other intellectual property rights of third parties, by or arising from the use of Renesas Electronics products or technical information described in this document, including but not limited to, the product data, drawings, charts, programs, algorithms, and application examples.
3. No license, express, implied or otherwise, is granted hereby under any patents, copyrights or other intellectual property rights of Renesas Electronics or others.
4. You shall be responsible for determining what licenses are required from any third parties, and obtaining such licenses for the lawful import, export, manufacture, sales, utilization, distribution or other disposal of any products incorporating Renesas Electronics products, if required.
5. You shall not alter, modify, copy, or reverse engineer any Renesas Electronics product, whether in whole or in part. Renesas Electronics disclaims any and all liability for any losses or damages incurred by you or third parties arising from such alteration, modification, copying or reverse engineering.
6. Renesas Electronics products are classified according to the following two quality grades: “Standard” and “High Quality”. The intended applications for each Renesas Electronics product depends on the product’s quality grade, as indicated below.
   "Standard": Computers; office equipment; communications equipment; test and measurement equipment; audio and visual equipment; home electronic appliances; machine tools; personal electronic equipment; industrial robots; etc.
   "High Quality": Transportation equipment (automobiles, trains, ships, etc.); traffic control (traffic lights); large-scale communication equipment; key financial terminal systems; safety control equipment; etc.
   Unless expressly designated as a high reliability product or a product for harsh environments in a Renesas Electronics data sheet or other Renesas Electronics document, Renesas Electronics products are not intended or authorized for use in products or systems that may pose a direct threat to human life or bodily injury (artificial life support devices or systems; surgical implantations; etc.), or may cause serious property damage (space system; undersea repeaters; nuclear power control systems; aircraft control systems; key plant systems; military equipment; etc.). Renesas Electronics disclaims any and all liability for any damages or losses incurred by you or any third parties arising from the use of any Renesas Electronics product that is inconsistent with any Renesas Electronics data sheet, user’s manual or other Renesas Electronics document.
7. No semiconductor product is absolutely secure. Notwithstanding any security measures or features that may be implemented in Renesas Electronics hardware or software products, Renesas Electronics shall have absolutely no liability arising out of any vulnerability or security breach, including but not limited to any unauthorized access to or use of a Renesas Electronics product or a system that uses a Renesas Electronics product. RENESAS ELECTRONICS DOES NOT WARRANT OR GUARANTEE THAT RENESAS ELECTRONICS PRODUCTS, OR ANY SYSTEMS CREATED USING RENESAS ELECTRONICS PRODUCTS WILL BE INVULNERABLE OR FREE FROM CORRUPTION, ATTACK, VIRUSES, INTERFERENCE, HACKING, DATA LOSS OR THEFT, OR OTHER SECURITY INTRUSION (“Vulnerability Issues”). RENESAS ELECTRONICS DISCLAIMS ANY AND ALL RESPONSIBILITY OR LIABILITY ARISING FROM OR RELATED TO ANY VULNERABILITY ISSUES. FURTHERMORE, TO THE EXTENT PERMITTED BY APPLICABLE LAW, RENESAS ELECTRONICS DISCLAIMS ANY AND ALL WARRANTIES, EXPRESS OR IMPLIED, WITH RESPECT TO THIS DOCUMENT AND ANY RELATED OR ACCOMPANYING SOFTWARE OR HARDWARE, INCLUDING BUT NOT LIMITED TO THE IMPLIED WARRANTIES OF MERCHANTABILITY, OR FITNESS FOR A PARTICULAR PURPOSE.
8. When using Renesas Electronics products, refer to the latest product information (data sheets, user’s manuals, application notes, “General Notes for Handling and Using Semiconductor Devices” in the reliability handbook, etc.), and ensure that usage conditions are within the ranges specified by Renesas Electronics with respect to maximum ratings, operating power supply voltage range, heat dissipation characteristics, installation, etc. Renesas Electronics disclaims any and all liability for any malfunctions, failure or accident arising out of the use of Renesas Electronics products outside of such specified ranges.
9. Although Renesas Electronics endeavors to improve the quality and reliability of Renesas Electronics products, semiconductor products have specific characteristics, such as the occurrence of failure at a certain rate and malfunctions under certain use conditions. Unless designated as a high reliability product or a product for harsh environments in a Renesas Electronics data sheet or other Renesas Electronics document, Renesas Electronics products are not subject to radiation resistance design. You are responsible for implementing safety measures to guard against the possibility of bodily injury, injury or damage caused by fire, and/or danger to the public in the event of a failure or malfunction of Renesas Electronics products, such as safety design for hardware and software, including but not limited to redundancy, fire control and malfunction prevention, appropriate treatment for aging degradation or any other appropriate measures. Because the evaluation of microcomputer software alone is very difficult and impractical, you are responsible for evaluating the safety of the final products or systems manufactured by you.
10. Please contact a Renesas Electronics sales office for details as to environmental matters such as the environmental compatibility of each Renesas Electronics product. You are responsible for carefully and sufficiently investigating applicable laws and regulations that regulate the inclusion or use of controlled substances, including without limitation, the EU RoHS Directive, and using Renesas Electronics products in compliance with all these applicable laws and regulations. Renesas Electronics disclaims any and all liability for damages or losses occurring as a result of your noncompliance with applicable laws and regulations.
11. Renesas Electronics products and technologies shall not be used for or incorporated into any products or systems whose manufacture, use, or sale is prohibited under any applicable domestic or foreign laws or regulations. You shall comply with any applicable export control laws and regulations promulgated and administered by the governments of any countries asserting jurisdiction over the parties or transactions.
12. It is the responsibility of the buyer or distributor of Renesas Electronics products, or any other party who distributes, disposes of, or otherwise sells or transfers the product to a third party, to notify such third party in advance of the contents and conditions set forth in this document.
13. This document shall not be reprinted, reproduced or duplicated in any form, in whole or in part, without prior written consent of Renesas Electronics.
14. Please contact a Renesas Electronics sales office if you have any questions regarding the information contained in this document or Renesas Electronics products.

(Note1) “Renesas Electronics” as used in this document means Renesas Electronics Corporation and also includes its directly or indirectly controlled subsidiaries.
(Note2) “Renesas Electronics product(s)” means any product developed or manufactured by or for Renesas Electronics.

(Rev.5.0-1 October 2020)

Corporate Headquarters

TOYOSU FORESIA, 3-2-24 Toyosu,
Koto-ku, Tokyo 135-0061, Japan
www.renesas.com

Contact Information

For further information on a product, technology, the most up-to-date version of a document, or your nearest sales office, please visit:
www.renesas.com/contact/

Trademarks

Renesas and the Renesas logo are trademarks of Renesas Electronics Corporation. All trademarks and registered trademarks are the property of their respective owners.

© 2024 Renesas Electronics Corporation. All rights reserved.

General Precautions in the Handling of Microprocessing Unit and Microcontroller Unit Products

The following usage notes are applicable to all Microprocessing unit and Microcontroller unit products from Renesas. For detailed usage notes on the products covered by this document, refer to the relevant sections of the document as well as any technical updates that have been issued for the products.

1. Precaution against Electrostatic Discharge (ESD)
   A strong electrical field, when exposed to a CMOS device, can cause destruction of the gate oxide and ultimately degrade the device operation. Steps must be taken to stop the generation of static electricity as much as possible, and quickly dissipate it when it occurs. Environmental control must be adequate. When it is dry, a humidifier should be used. This is recommended to avoid using insulators that can easily build up static electricity. Semiconductor devices must be stored and transported in an anti-static container, static shielding bag or conductive material. All test and measurement tools including work benches and floors must be grounded. The operator must also be grounded using a wrist strap. Semiconductor devices must not be touched with bare hands. Similar precautions must be taken for printed circuit boards with mounted semiconductor devices.
2. Processing at power-on
   The state of the product is undefined at the time when power is supplied. The states of internal circuits in the LSI are indeterminate and the states of register settings and pins are undefined at the time when power is supplied. In a finished product where the reset signal is applied to the external reset pin, the states of pins are not guaranteed from the time when power is supplied until the reset process is completed. In a similar way, the states of pins in a product that is reset by an on-chip power-on reset function are not guaranteed from the time when power is supplied until the power reaches the level at which resetting is specified.
3. Input of signal during power-off state
   Do not input signals or an I/O pull-up power supply while the device is powered off. The current injection that results from input of such a signal or I/O pull-up power supply may cause malfunction and the abnormal current that passes in the device at this time may cause degradation of internal elements. Follow the guideline for input signal during power-off state as described in your product documentation.
4. Handling of unused pins
   Handle unused pins in accordance with the directions given under handling of unused pins in the manual. The input pins of CMOS products are generally in the high-impedance state. In operation with an unused pin in the open-circuit state, extra electromagnetic noise is induced in the vicinity of the LSI, an associated shoot-through current flows internally, and malfunctions occur due to the false recognition of the pin state as an input signal become possible.
5. Clock signals
   After applying a reset, only release the reset line after the operating clock signal becomes stable. When switching the clock signal during program execution, wait until the target clock signal is stabilized. When the clock signal is generated with an external resonator or from an external oscillator during a reset, ensure that the reset line is only released after full stabilization of the clock signal. Additionally, when switching to a clock signal produced with an external resonator or by an external oscillator while program execution is in progress, wait until the target clock signal is stable.
6. Voltage application waveform at input pin
   Waveform distortion due to input noise or a reflected wave may cause malfunction. If the input of the CMOS device stays in the area between V_{IL} (Max.) and V_{IH} (Min.) due to noise, for example, the device may malfunction. Take care to prevent chattering noise from entering the device when the input level is fixed, and also in the transition period when the input level passes through the area between V_{IL} (Max.) and V_{IH} (Min.).
7. Prohibition of access to reserved addresses
   Access to reserved addresses is prohibited. The reserved addresses are provided for possible future expansion of functions. Do not access these addresses as the correct operation of the LSI is not guaranteed.
8. Differences between products
   Before changing from one product to another, for example to a product with a different part number, confirm that the change will not lead to problems. The characteristics of a microprocessing unit or microcontroller unit products in the same group but having a different part number might differ in terms of internal memory capacity, layout pattern, and other factors, which can affect the ranges of electrical characteristics, such as characteristic values, operating margins, immunity to noise, and amount of radiated noise. When changing to a product with a different part number, implement a system-evaluation test for the given product.

How to Use This Manual

Readers

This manual is intended for user engineers who wish to understand the functions of the RL78/G1F and design and develop application systems and programs for these devices.
The target products are as follows.

- 24-pin: R5F11B7x (x = C, E)
- 32-pin: R5F11BBx (x = C, E)
- 36-pin: R5F11BCx (x = C, E)
- 48-pin: R5F11BGx (x = C, E)
- 64-pin: R5F11BLx (x = C, E)

Purpose

This manual is intended to give users an understanding of the functions described in the **Organization** below.

Organization

The RL78/G1F manual is separated into two parts: this manual and the software edition (common to the RL78 family).

RL78/G1F User's Manual Hardware (This Manual)	**RL78 Family User's Manual Software**
• Pin functions • Internal block functions • Interrupts • Other on-chip peripheral functions • Electrical specifications	• CPU functions • Instruction set • Explanation of each instruction

How to Read This Manual

It is assumed that the readers of this manual have general knowledge of electrical engineering, logic circuits, and microcontrollers.

- To gain a general understanding of functions:
  → Read this manual in the order of the **CONTENTS**. The mark "<R>" shows major revised points. The revised points can be easily searched by copying an "<R>" in the PDF file and specifying it in the "Find what:" field.
- How to interpret the register format:
  → For a bit number enclosed in angle brackets, the bit name is defined as a reserved word in the assembler, and is defined as an sfr variable using the #pragma sfr directive in the compiler.
- To know details of the RL78/G1F Microcontroller instructions:
  → Refer to the separate document **RL78 Family User's Manual Software (R01US0015E)**.

Conventions	Data significance:	Higher digits on the left and lower digits on the right
	Active low representations:	$\overline{\times\times\times}$ (overscore over pin and signal name)
	Note:	Footnote for item marked with Note in the text
	Caution:	Information requiring particular attention
	Remark:	Supplementary information
	Numerical representations:	Binary.....×××× or ××××B
		Decimal.....××××
		Hexadecimal .....××××H

Related Documents The related documents indicated in this publication may include preliminary versions. However, preliminary versions are not marked as such.

Documents Related to Devices

Document Name	Document No.
RL78/G1F User's Manual Hardware	This manual
RL78 Family User's Manual Software	R01US0015E

Documents Related to Flash Memory Programming (User's Manual)

Document Name	Document No.
PG-FP5 Flash Memory Programmer User's Manual	—
RL78, 78K, V850, RX100, RX200, RX600 (Except RX64x), R8C, SH	R20UT2923E
Common	R20UT2922E
Setup Manual	R20UT0930E

Caution The related documents listed above are subject to change without notice. Be sure to use the latest version of each document when designing.

Other Documents

Document Name	Document No.
Renesas Microcontrollers RL78 Family	R01CP0003E
Semiconductor Package Mount Manual	R50ZZ0003E
Semiconductor Reliability Handbook	R51ZZ0001E

Caution The related documents listed above are subject to change without notice. Be sure to use the latest version of each document when designing.

All trademarks and registered trademarks are the property of their respective owners.

EEPROM is a trademark of Renesas Electronics Corporation.

SuperFlash is a registered trademark of Silicon Storage Technology, Inc. in several countries including the United States and Japan.

Caution: This product uses SuperFlash® technology licensed from Silicon Storage Technology, Inc.

CONTENTS

1. OUTLINE 1
1.1 Features 1
1.2 Ordering Information 4
1.3 Pin Configuration (Top View) 6
1.3.1 24-pin products 6
1.3.2 32-pin products 7
1.3.3 36-pin products 9
1.3.4 48-pin products 10
1.3.5 64-pin products 11
1.4 Pin Identification 12
1.5 Block Diagram 13
1.6 Outline of Functions 14

2. PIN FUNCTIONS 16
2.1 Port Functions 16
2.1.1 24-pin products 17
2.1.2 32-pin products 19
2.1.3 36-pin products 21
2.1.4 48-pin products 23
2.1.5 64-pin products 25
2.2 Functions other than port pins 27
2.2.1 Functions for each product 27
2.2.2 Pins for each product (pins other than port pins) 31
2.3 Connection of Unused Pins 33
2.4 Pin Block Diagrams 34

3. CPU ARCHITECTURE 57
3.1 Overview 57
3.2 Memory Space 57
3.2.1 Internal program memory space 62
3.2.2 Mirror area 65
3.2.3 Internal data memory space 67
3.2.4 Special function register (SFR) area 68
3.2.5 Extended special function register (2nd SFR: 2nd Special Function Register) area 68
3.2.6 Data memory addressing 69
3.3 Processor Registers 70
3.3.1 Control registers 70
3.3.2 General-purpose registers 72
3.3.3 ES and CS registers 73
3.3.4 Special function registers (SFRs) 74
3.3.5 Extended special function registers (2nd SFRs: 2nd Special Function Registers) 80
3.4 Instruction Address Addressing 89
3.4.1 Relative addressing 89
3.4.2 Immediate addressing 89
3.4.3 Table indirect addressing 90

3.4.4 Register direct addressing 91
3.5 Addressing for Processing Data Addresses 92
3.5.1 Implied addressing 92
3.5.2 Register addressing 92
3.5.3 Direct addressing 93
3.5.4 Short direct addressing 94
3.5.5 SFR addressing 95
3.5.6 Register indirect addressing 96
3.5.7 Based addressing 97
3.5.8 Based indexed addressing 100
3.5.9 Stack addressing 101

4. PORT FUNCTIONS 104
4.1 Port Functions 104
4.2 Port Configuration 105
4.2.1 Port 0 106
4.2.2 Port 1 106
4.2.3 Port 2 107
4.2.4 Port 3 108
4.2.5 Port 4 108
4.2.6 Port 5 108
4.2.7 Port 6 109
4.2.8 Port 7 109
4.2.9 Port 12 109
4.2.10 Port 13 110
4.2.11 Port 14 110
4.3 Registers Controlling Port Function 111
4.3.1 Port mode registers (PMxx) 114
4.3.2 Port registers (Pxx) 115
4.3.3 Pull-up resistor option registers (PUxx) 116
4.3.4 Port input mode registers (PIMxx) 117
4.3.5 Port output mode registers (POMxx) 118
4.3.6 Port mode control registers (PMCxx) 119
4.3.7 Peripheral I/O redirection register 0 (PIOR0) 120
4.3.8 Peripheral I/O redirection register 1 (PIOR1) 122
4.3.9 Peripheral I/O redirection register 2 (PIOR2) 123
4.3.10 Peripheral I/O redirection register 3 (PIOR3) 124
4.3.11 Global digital input disable register (GDIDIS) 126
4.4 Port Function Operations 127
4.4.1 Writing to I/O port 127
4.4.2 Reading from I/O port 127
4.4.3 Operations on I/O port 127
4.4.4 Handling different potential (1.8 V, 2.5 V, 3 V) by using $EV_{DD} \leq V_{DD}$ 128
4.4.5 Handling different potential (1.8 V, 2.5 V, 3 V) by using I/O buffers 128
4.5 Register Settings When Using Alternate Function 131
4.5.1 Basic concept when using alternate function 131
4.5.2 Register settings for alternate function whose output function is not used 132
4.5.3 Register setting examples for used port and alternate functions 134
4.6 Cautions When Using Port Function 144

4.6.1 Cautions on 1-Bit Manipulation Instruction for Port Register n (Pn) 144
4.6.2 Notes on specifying the pin settings 145

5. CLOCK GENERATOR 146
5.1 Functions of Clock Generator 146
5.2 Configuration of Clock Generator 149
5.3 Registers Controlling Clock Generator 151
5.3.1 Clock operation mode control register (CMC) 151
5.3.2 System clock control register (CKC) 154
5.3.3 Clock operation status control register (CSC) 156
5.3.4 Oscillation stabilization time counter status register (OSTC) 157
5.3.5 Oscillation stabilization time select register (OSTS) 159
5.3.6 Peripheral enable registers 0, 1 (PER0, PER1) 161
5.3.7 Subsystem clock supply mode control register (OSMC) 166
5.3.8 High-speed on-chip oscillator frequency select register (HOCODIV) 167
5.3.9 High-speed on-chip oscillator trimming register (HIOTRM) 169
5.4 System Clock Oscillator 170
5.4.1 X1 oscillator 170
5.4.2 XT1 oscillator 170
5.4.3 High-speed on-chip oscillator 174
5.4.4 Low-speed on-chip oscillator 174
5.5 Clock Generator Operation 175
5.6 Controlling Clock 177
5.6.1 Example of setting high-speed on-chip oscillator 177
5.6.2 Example of setting X1 oscillation clock 179
5.6.3 Example of setting XT1 oscillation clock 180
5.6.4 CPU clock status transition diagram 181
5.6.5 Condition before changing CPU clock and processing after changing CPU clock 187
5.6.6 Time required for switchover of CPU clock and main system clock 189
5.6.7 Conditions before clock oscillation is stopped 190
5.7 Resonator and Oscillator Constants 191

6. TIMER ARRAY UNIT 194
6.1 Functions of Timer Array Unit 196
6.1.1 Independent channel operation function 196
6.1.2 Simultaneous channel operation function 197
6.1.3 8-bit timer operation function (channels 1 and 3 only) 198
6.1.4 LIN-bus supporting function (channel 3 of unit 0 only) 199
6.2 Configuration of Timer Array Unit 200
6.2.1 Timer count register mn (TCRmn) 205
6.2.2 Timer data register mn (TDRmn) 207
6.3 Registers Controlling Timer Array Unit 208
6.3.1 Peripheral enable register 0 (PER0) 209
6.3.2 Timer clock select register m (TPSm) 210
6.3.3 Timer mode register mn (TMRmn) 213
6.3.4 Timer status register mn (TSRmn) 218
6.3.5 Timer channel enable status register m (TEm) 219
6.3.6 Timer channel start register m (TSm) 220
6.3.7 Timer channel stop register m (TTm) 222

6.3.8 Timer I/O select register 0 (TIOS0) 223
6.3.9 Timer output enable register m (TOEm) 224
6.3.10 Timer output register m (TOm) 225
6.3.11 Timer output level register m (TOLm) 226
6.3.12 Timer output mode register m (TOMm) 227
6.3.13 Input switch control register (ISC) 228
6.3.14 Noise filter enable register 1 (NFEN1) 229
6.3.15 Registers controlling port functions of pins to be used for timer I/O 231
6.4 Basic Rules of Timer Array Unit 232
6.4.1 Basic rules of simultaneous channel operation function 232
6.4.2 Basic rules of 8-bit timer operation function (channels 1 and 3 only) 234
6.5 Operation of Counter 235
6.5.1 Count clock (fTCLK) 235
6.5.2 Start timing of counter 237
6.5.3 Operation of counter 238
6.6 Channel Output (TOmn pin) Control 243
6.6.1 TOmn pin output circuit configuration 243
6.6.2 TOmn Pin Output Setting 244
6.6.3 Cautions on Channel Output Operation 245
6.6.4 Collective manipulation of TOmn bit 250
6.6.5 Timer Interrupt and TOmn Pin Output at Operation Start 251
6.7 Timer Input (TImn) Control 252
6.7.1 TImn input circuit configuration 252
6.7.2 Noise filter 252
6.7.3 Cautions on channel input operation 253
6.8 Independent Channel Operation Function of Timer Array Unit 254
6.8.1 Operation as interval timer/square wave output 254
6.8.2 Operation as external event counter 259
6.8.3 Operation as frequency divider (channel 0 of unit 0 only) 263
6.8.4 Operation as input pulse interval measurement 267
6.8.5 Operation as input signal high-/low-level width measurement 271
6.8.6 Operation as delay counter 275
6.9 Simultaneous Channel Operation Function of Timer Array Unit 279
6.9.1 Operation as one-shot pulse output function 279
6.9.2 Operation as PWM function 286
6.9.3 Operation as multiple PWM output function 293
6.10 Cautions When Using Timer Array Unit 301
6.10.1 Cautions When Using Timer output 301

7. TIMER RJ 302
7.1 Functions of Timer RJ 302
7.2 Configuration of Timer RJ 303
7.3 Registers Controlling Timer RJ 304
7.3.1 Peripheral enable register 1 (PER1) 305
7.3.2 Subsystem clock supply mode control register (OSMC) 306
7.3.3 Timer RJ counter register 0 (TRJ0) 307
7.3.4 Timer RJ control register 0 (TRJCR0) 308
7.3.5 Timer RJ I/O control register 0 (TRJIOC0) 310
7.3.6 Timer RJ mode register 0 (TRJMR0) 312

7.3.7 Timer RJ event pin select register 0 (TRJISR0) 313
7.3.8 Port mode registers 0, 3, 4, 5, 7 (PM0, PM3, PM4, PM5, PM7) 314
7.4 Timer RJ Operation 316
7.4.1 Reload Register and Counter Rewrite Operation 316
7.4.2 Timer Mode 317
7.4.3 Pulse Output Mode 318
7.4.4 Event Counter Mode 319
7.4.5 Pulse Width Measurement Mode 321
7.4.6 Pulse Period Measurement Mode 322
7.4.7 Coordination with Event Link Controller (ELC) 323
7.4.8 Output Settings for Each Mode 323
7.5 Cautions for Timer RJ 324
7.5.1 Count Operation Start and Stop Control 324
7.5.2 Access to Flags (Bits TEDGF and TUNDF in TRJCR0 Register) 324
7.5.3 Access to Counter Register 324
7.5.4 When Changing Mode 324
7.5.5 Procedure for Setting Pins TRJO0 and TRJIO0 325
7.5.6 When Timer RJ is not Used 325
7.5.7 When Timer RJ Operating Clock is Stopped 325
7.5.8 Procedure for Setting STOP Mode (Event Counter Mode) 326
7.5.9 Functional Restriction in STOP Mode (Event Counter Mode Only) 326
7.5.10 When Count is Forcibly Stopped by TSTOP Bit 326
7.5.11 Digital Filter 326
7.5.12 When Selecting f_{IL} as Count Source 326

8. TIMER RD 327
8.1 Functions of Timer RD 327
8.2 Configuration of Timer RD 328
8.3 Registers Controlling Timer RD 329
8.3.1 Peripheral enable register 1 (PER1) 330
8.3.2 Timer RD ELC register (TRDELC) 331
8.3.3 Timer RD start register (TRDSTR) 332
8.3.4 Timer RD mode register (TRDMR) 333
8.3.5 Timer RD PWM function select register (TRDPMR) 334
8.3.6 Timer RD function control register (TRDFCR) 335
8.3.7 Timer RD output master enable register 1 (TRDOER1) 337
8.3.8 Timer RD output master enable register 2 (TRDOER2) 338
8.3.9 Timer RD output control register (TRDOCR) 339
8.3.10 Timer RD digital filter function select register i (TRDDFi) (i = 0 or 1) 343
8.3.11 Timer RD control register i (TRDCRi) (i = 0 or 1) 345
8.3.12 Timer RD I/O control register Ai (TRDIORAi) (i = 0 or 1) 350
8.3.13 Timer RD I/O control register Ci (TRDIORCi) (i = 0 or 1) 352
8.3.14 Timer RD status register 0 (TRDSR0) 354
8.3.15 Timer RD status register 1 (TRDSR1) 358
8.3.16 Timer RD interrupt enable register i (TRDIERi) (i = 0 or 1) 362
8.3.17 Timer RD PWM function output level control register i (TRDPOCRi) (i = 0 or 1) 363
8.3.18 Timer RD counter i (TRDi) (i = 0 or 1) 364
8.3.19 Timer RD general registers Ai, Bi, Ci, and Di (TRDGRAi, TRDGRBi,TRDGRCi, TRDGRDi) (i = 0 or 1) [Input Capture Function] 366

8.3.20 Port mode register 1 (PM1) ... 377
8.4 Items Common to Multiple Modes ... 378
8.4.1 Count Sources ... 378
8.4.2 Buffer Operation ... 379
8.4.3 Synchronous Operation ... 382
8.4.4 Pulse Output Forced Cutoff ... 383
8.4.5 Event Input from Event Link Controller (ELC) ... 385
8.4.6 Event Output to Event Link Controller (ELC)/Data Transfer Controller (DTC) ... 385
8.5 Timer RD Operation ... 386
8.5.1 Input Capture Function ... 386
8.5.2 Output Compare Function ... 391
8.5.3 PWM Function ... 397
8.5.4 Reset Synchronous PWM Mode ... 402
8.5.5 Complementary PWM Mode ... 406
8.5.6 PWM3 Mode ... 411
8.6 Timer RD Interrupt ... 415
8.7 Cautions for Timer RD ... 417
8.7.1 SFR Read/Write Access ... 417
8.7.2 Mode Switching ... 418
8.7.3 Count Source ... 418
8.7.4 Input Capture Function ... 418
8.7.5 Procedure for Setting Pins TRDIOAi, TRDIOBi, TRDIOCi, and TRDIODi (i = 0 or 1) ... 419
8.7.6 External clock TRDCLK ... 419
8.7.7 Reset Synchronous PWM Mode ... 419
8.7.8 Complementary PWM Mode ... 420
8.8 PWM Option Unit A (PWMOPA) ... 424
8.8.1 Overview of PWM option unit ... 425
8.8.2 Registers controlling PWM option unit ... 425
8.8.3 Operation ... 432
8.8.3.1 Forced cutoff ... 432
8.8.3.2 Hardware release (HS_SEL = 0) ... 432
8.8.3.3 Software cutoff release (HS_SEL = 1) ... 442
8.8.3.4 Hazard measures ... 448
8.8.3.5 Output cutoff source detected state and output cutoff source undetected state ... 449
8.8.3.6 Timing when timer RD counter value becomes 0000H ... 449
8.8.3.7 Setting procedure ... 453
8.8.4 Cautions ... 454

9. TIMER RG ... 455
9.1 Functions of Timer RG ... 455
9.2 Configuration of Timer RG ... 456
9.3 Registers Controlling Timer RG ... 457
9.3.1 Peripheral enable register 1 (PER1) ... 458
9.3.2 Timer RG mode register (TRGMR) ... 459
9.3.3 Timer RG count control register (TRGCNTC) ... 460
9.3.4 Timer RG control register (TRGCR) ... 461
9.3.5 Timer RG interrupt enable register (TRGIER) ... 462
9.3.6 Timer RG status register (TRGSR) ... 463
9.3.7 Timer RG I/O control register (TRGIOR) ... 465

9.3.8 Timer RG counter (TRG) 467
9.3.9 Timer RG general registers A, B, C, and D (TRGGRA, TRGGRB, TRGGRC, TRGGRD) 468
9.3.10 Port mode registers 0, 5 (PM0, PM5) 470
9.4 Timer RG Operation 471
9.4.1 Items Common to Multiple Modes and Functions 471
9.4.2 Timer Mode (Input Capture Function) 476
9.4.3 Timer Mode (Output Compare Function) 479
9.4.4 PWM Mode 483
9.4.5 Phase Counting Mode 487
9.5 Timer RG Interrupt 489
9.6 Cautions for Timer RG 491
9.6.1 Phase Difference, Overlap, and Pulse Width in Phase Counting Mode 491
9.6.2 Mode Switching 491
9.6.3 Count Source Switching 491
9.6.4 Procedure for Setting Pins TRGIOA and TRGIOB 492
9.6.5 External Clock TRGCLKA, TRGCLKB 492
9.6.6 SFR Read/Write Access 493
9.6.7 Input Capture Operation when Count is Stopped 493

10. TIMER RX 494
10.1 Functions of Timer RX 494
10.2 Configuration of Timer RX 495
10.3 Registers That Control Timer RX 496
10.3.1 Peripheral enable register 1 (PER1) 497
10.3.2 Timer RX counter (TRX) 498
10.3.3 Timer RX count buffer counter (TRXBUF) 498
10.3.4 Timer RX function control register 1 (TRXCR1) 499
10.3.5 Timer RX function control register 2 (TRXCR2) 501
10.3.6 Timer RX status register (TRXSR) 502
10.4 Operation of Timer RX 503
10.4.1 Count source 503
10.4.2 Starting timer RX counting 503
10.4.2.1 Setting and operation when trigger from timer RD is selected 504
10.4.2.2 Setting and operation when software trigger is selected 505
10.4.3 Stopping timer RX counting 506
10.4.3.1 Setting and operation when trigger from comparator 1 is selected 506
10.4.3.2 Setting and operation when software trigger is selected 506
10.4.4 Input capture operation 507
10.4.5 Resetting timer RX count 508
10.4.6 Timer RX interrupt operation 509
10.5 Notes on Using Timer RX 510
10.5.1 SFR read/write access 510
10.5.2 Overflow interrupt 510
10.5.3 Input capture and timer RX count reset operations 510
10.5.4 Coordination between timer RX and timer RD or comparator 1 510

11. REAL-TIME CLOCK 511
11.1 Functions of Real-time Clock 511
11.2 Configuration of Real-time Clock 511

11.3 Registers Controlling Real-time Clock 513
11.3.1 Peripheral enable register 0 (PER0) 514
11.3.2 Subsystem clock supply mode control register (OSMC) 515
11.3.3 Real-time clock control register 0 (RTCC0) 516
11.3.4 Real-time clock control register 1 (RTCC1) 517
11.3.5 Second count register (SEC) 519
11.3.6 Minute count register (MIN) 519
11.3.7 Hour count register (HOUR) 520
11.3.8 Day count register (DAY) 522
11.3.9 Week count register (WEEK) 523
11.3.10 Month count register (MONTH) 524
11.3.11 Year count register (YEAR) 524
11.3.12 Watch error correction register (SUBCUD) 525
11.3.13 Alarm minute register (ALARMWM) 526
11.3.14 Alarm hour register (ALARMWH) 526
11.3.15 Alarm week register (ALARMWW) 526
11.3.16 Port mode register 3 (PM3) 527
11.3.17 Port register 3 (P3) 527
11.4 Real-time Clock Operation 528
11.4.1 Starting operation of real-time clock 528
11.4.2 Shifting to HALT/STOP mode after starting operation 529
11.4.3 Reading/writing real-time clock 530
11.4.4 Setting alarm of real-time clock 532
11.4.5 1 Hz output of real-time clock 533
11.4.6 Example of watch error correction of real-time clock 534

12. 12-BIT INTERVAL TIMER 539
12.1 Functions of 12-bit Interval Timer 539
12.2 Configuration of 12-bit Interval Timer 539
12.3 Registers Controlling 12-bit Interval Timer 540
12.3.1 Peripheral enable register 0 (PER0) 540
12.3.2 Subsystem clock supply mode control register (OSMC) 541
12.3.3 12-bit interval timer control register (ITMC) 542
12.4 12-bit Interval Timer Operation 543
12.4.1 12-bit interval timer operation timing 543
12.4.2 Start of count operation and re-enter to HALT/STOP mode after returned from HALT/STOP mode 544

13. CLOCK OUTPUT/BUZZER OUTPUT CONTROLLER 545
13.1 Functions of Clock Output/Buzzer Output Controller 545
13.2 Configuration of Clock Output/Buzzer Output Controller 547
13.3 Registers Controlling Clock Output/Buzzer Output Controller 547
13.3.1 Clock output select registers n (CKSn) 547
13.3.2 Registers controlling port functions of pins to be used for clock or buzzer output 549
13.4 Operations of Clock Output/Buzzer Output Controller 550
13.4.1 Operation as output pin 550
13.5 Cautions of clock output/buzzer output controller 550

14. WATCHDOG TIMER 551
14.1 Functions of Watchdog Timer 551
14.2 Configuration of Watchdog Timer 552
14.3 Register Controlling Watchdog Timer 553
14.3.1 Watchdog timer enable register (WDTE) 553
14.4 Operation of Watchdog Timer 554
14.4.1 Controlling operation of watchdog timer 554
14.4.2 Setting overflow time of watchdog timer 556
14.4.3 Setting window open period of watchdog timer 557
14.4.4 Setting watchdog timer interval interrupt 559

15. A/D CONVERTER 560
15.1 Function of A/D Converter 560
15.2 Configuration of A/D Converter 563
15.3 Registers Controlling A/D Converter 565
15.3.1 Peripheral enable register 0 (PER0) 566
15.3.2 A/D converter mode register 0 (ADM0) 567
15.3.3 A/D converter mode register 1 (ADM1) 575
15.3.4 A/D converter mode register 2 (ADM2) 576
15.3.5 10-bit A/D conversion result register (ADCR) 578
15.3.6 8-bit A/D conversion result register (ADCRH) 578
15.3.7 Analog input channel specification register (ADS) 579
15.3.8 Conversion result comparison upper limit setting register (ADUL) 581
15.3.9 Conversion result comparison lower limit setting register (ADLL) 581
15.3.10 A/D test register (ADTES) 582
15.3.11 Registers controlling port function of analog input pins 583
15.4 A/D Converter Conversion Operations 584
15.5 Input Voltage and Conversion Results 586
15.6 A/D Converter Operation Modes 587
15.6.1 Software trigger mode (select mode, sequential conversion mode) 587
15.6.2 Software trigger mode (select mode, one-shot conversion mode) 588
15.6.3 Software trigger mode (scan mode, sequential conversion mode) 589
15.6.4 Software trigger mode (scan mode, one-shot conversion mode) 590
15.6.5 Hardware trigger no-wait mode (select mode, sequential conversion mode) 591
15.6.6 Hardware trigger no-wait mode (select mode, one-shot conversion mode) 592
15.6.7 Hardware trigger no-wait mode (scan mode, sequential conversion mode) 593
15.6.8 Hardware trigger no-wait mode (scan mode, one-shot conversion mode) 594
15.6.9 Hardware trigger wait mode (select mode, sequential conversion mode) 595
15.6.10 Hardware trigger wait mode (select mode, one-shot conversion mode) 596
15.6.11 Hardware trigger wait mode (scan mode, sequential conversion mode) 597
15.6.12 Hardware trigger wait mode (scan mode, one-shot conversion mode) 598
15.7 A/D Converter Setup Flowchart 599
15.7.1 Setting up software trigger mode 600
15.7.2 Setting up hardware trigger no-wait mode 601
15.7.3 Setting up hardware trigger wait mode 602
15.7.4 Setup when temperature sensor output voltage/internal reference voltage is selected (example for software trigger mode and one-shot conversion mode) 603
15.7.5 Setting up test mode 604
15.8 SNOOZE Mode Function 605

15.9 How to Read A/D Converter Characteristics Table 609
15.10 Cautions for A/D Converter 612

16. D/A CONVERTER 616
16.1 Functions of D/A Converter 616
16.2 Configuration of D/A Converter 617
16.3 Registers Controlling D/A Converter 618
16.3.1 Peripheral enable register 1 (PER1) 618
16.3.2 D/A converter mode register (DAM) 619
16.3.3 D/A conversion value setting register i (DACSi) (i = 0, 1) 619
16.3.4 Event output destination select register n (ELSELRn) (n = 00 to 21) 620
16.3.5 Registers controlling port functions of analog input pins 620
16.4 Operations of D/A Converter 621
16.4.1 Operation in Normal Mode 621
16.4.2 Operation in Real-Time Output Mode 622
16.4.3 Timing for Outputting D/A Conversion Value 623
16.5 Cautions for D/A Converter 624

17. COMPARATOR (CMP) 625
17.1 Functions of Comparator 625
17.2 Configuration of CMP 626
17.3 Registers Controlling Comparator 628
17.3.1 Peripheral enable register 1 (PER1) 629
17.3.2 Comparator mode setting register (COMPMDR) 630
17.3.3 Comparator filter control register (COMPFIR) 631
17.3.4 Comparator output control register (COMPOCR) 633
17.3.5 Comparator internal reference voltage control register (CVRCTL) 635
17.3.6 Comparator internal reference voltage select register i (CiRVM) (i = 0, 1) 636
17.3.7 Comparator 0 input signal selection control register (CMPSEL0) 637
17.3.8 Comparator 1 input signal selection control register (CMPSEL1) 638
17.3.9 Registers controlling port functions of analog input pins 639
17.4 Operation 640
17.4.1 Comparator i digital filter (i = 0 or 1) 642
17.4.2 Comparator i (i = 0 or 1) interrupts 643
17.4.3 Event signal output to event link controller (ELC) 644
17.4.4 Comparator i output (i = 0 or 1) 645
17.4.5 Stopping or supplying comparator clock 645

18. PROGRAMMABLE GAIN AMPLIFIER (PGA) 646
18.1 Functions of Programmable Gain Amplifier 646
18.2 Configuration of Programmable Gain Amplifier 646
18.3 Registers Controlling Programmable Gain Amplifier 647
18.3.1 Peripheral enable register 1 (PER1) 648
18.3.2 PGA control register (PGACTL) 649
18.3.3 Port mode control register 2 (PMC2) 650
18.3.4 Port mode register 2 (PM2) 650
18.4 Operation of Programmable Gain Amplifier 651
18.4.1 Setting procedure of programmable gain amplifier 651
18.4.2 Setting procedure of programmable gain amplifier 652

19. SERIAL ARRAY UNIT 653
19.1 Functions of Serial Array Unit 654
19.1.1 Simplified SPI (CSI00, CSI01, CSI10, CSI11, CSI20, CSI21) 654
19.1.2 UART (UART0 to UART2) 655
19.1.3 Simplified I^2C (IIC00, IIC01, IIC10, IIC11, IIC20, IIC21) 656
19.2 Configuration of Serial Array Unit 657
19.2.1 Shift register 661
19.2.2 Lower 8/9 bits of the serial data register mn (SDRmn) 661
19.3 Registers Controlling Serial Array Unit 663
19.3.1 Peripheral enable register 0 (PER0) 664
19.3.2 Serial clock select register m (SPSm) 665
19.3.3 Serial mode register mn (SMRmn) 667
19.3.4 Serial communication operation setting register mn (SCRmn) 668
19.3.5 Serial data register mn (SDRmn) 671
19.3.6 Serial flag clear trigger register mn (SIRmn) 673
19.3.7 Serial status register mn (SSRmn) 674
19.3.8 Serial channel start register m (SSm) 676
19.3.9 Serial channel stop register m (STm) 677
19.3.10 Serial channel enable status register m (SEm) 678
19.3.11 Serial output enable register m (SOEm) 679
19.3.12 Serial output register m (SOm) 680
19.3.13 Serial output level register m (SOLm) 681
19.3.14 Serial standby control register 0 (SSC0) 683
19.3.15 Input switch control register (ISC) 684
19.3.16 Noise filter enable register 0 (NFEN0) 685
19.3.17 Registers controlling port functions of serial input/output pins 686
19.4 Operation Stop Mode 687
19.4.1 Stopping the operation by units 687
19.4.2 Stopping the operation by channels 688
19.5 Operation of Simplified SPI (CSI00, CSI01, CSI10, CSI11, CSI20, CSI21) Communication 689
19.5.1 Master transmission 691
19.5.2 Master reception 699
19.5.3 Master transmission/reception 707
19.5.4 Slave transmission 715
19.5.5 Slave reception 723
19.5.6 Slave transmission/reception 729
19.5.7 SNOOZE mode function 737
19.5.8 Calculating transfer clock frequency 742
19.5.9 Procedure for processing errors that occurred during simplified SPI (CSI00, CSI01, CSI10, CSI11, CSI20, CSI21) communication 744
19.6 Clock Synchronous Serial Communication with Slave Select Input Function 745
19.6.1 Slave transmission 749
19.6.2 Slave reception 759
19.6.3 Slave transmission/reception 766
19.6.4 Calculating transfer clock frequency 776
19.6.5 Procedure for processing errors that occurred during slave select input function communication 778
19.7 Operation of UART (UART0 to UART2) Communication 779
19.7.1 UART transmission 781

19.7.2 UART reception 790
19.7.3 SNOOZE mode function 797
19.7.4 Calculating baud rate 805
19.7.5 Procedure for processing errors that occurred during UART (UART0 to UART2) communication 809
19.8 LIN Communication Operation 810
19.8.1 LIN transmission 810
19.8.2 LIN reception 813
19.9 Operation of Simplified I2C (IIC00, IIC01, IIC10, IIC11, IIC20, IIC21) Communication 818
19.9.1 Address field transmission 820
19.9.2 Data transmission 825
19.9.3 Data reception 828
19.9.4 Stop condition generation 832
19.9.5 Calculating transfer rate 833
19.9.6 Procedure for processing errors that occurred during simplified I2C (IIC00, IIC01, IIC10, IIC11, IIC20, IIC21) communication 836

20. SERIAL INTERFACE IICA 837
20.1 Functions of Serial Interface IICA 837
20.2 Configuration of Serial Interface IICA 840
20.3 Registers Controlling Serial Interface IICA 843
20.3.1 Peripheral enable register 0 (PER0) 844
20.3.2 IICA control register n0 (IICCTLn0) 844
20.3.3 IICA status register n (IICSn) 849
20.3.4 IICA flag register n (IICFn) 851
20.3.5 IICA control register n1 (IICCTLn1) 853
20.3.6 IICA low-level width setting register n (IICWLn) 855
20.3.7 IICA high-level width setting register n (IICWHn) 855
20.3.8 Port mode registers 1, 6 (PM1, PM6) 856
20.4 I2C Bus Mode Functions 857
20.4.1 Pin configuration 857
20.4.2 Setting transfer clock by using IICWLn and IICWHn registers 858
20.5 I2C Bus Definitions and Control Methods 860
20.5.1 Start conditions 860
20.5.2 Addresses 861
20.5.3 Transfer direction specification 861
20.5.4 Acknowledge (ACK) 862
20.5.5 Stop condition 863
20.5.6 Clock stretch 864
20.5.7 Canceling clock stretch 866
20.5.8 Interrupt request (INTIICAn) generation timing and clock stretch control 867
20.5.9 Address match detection method 868
20.5.10 Error detection 868
20.5.11 Extension code 869
20.5.12 Arbitration 870
20.5.13 Wakeup function 872
20.5.14 Communication reservation 875
20.5.15 Cautions 879
20.5.16 Communication operations 880

20.5.17 Timing of I2C interrupt request (INTIICAn) occurrence 888
20.6 Timing Charts 909

21. IrDA 924
21.1 Functions of IrDA 924
21.2 Registers 925
21.2.1 Peripheral enable register 0 (PER0) 925
21.2.2 IrDA control register (IRCR) 926
21.3 Operation 927
21.3.1 IrDA communication operation procedure 927
21.3.2 Transmission 928
21.3.3 Reception 929
21.3.4 Selecting High-Level Pulse Width 929
21.4 Usage Notes on IrDA 930

22. DATA TRANSFER CONTROLLER (DTC) 931
22.1 Functions of DTC 931
22.2 Configuration of DTC 933
22.3 Registers Controlling DTC 934
22.3.1 Allocation of DTC Control Data Area and DTC Vector Table Area 935
22.3.2 Control Data Allocation 936
22.3.3 Vector Table 937
22.3.4 Peripheral enable register 1 (PER1) 939
22.3.5 DTC control register j (DTCCRj) (j = 0 to 23) 940
22.3.6 DTC block size register j (DTBLSj) (j = 0 to 23) 941
22.3.7 DTC transfer count register j (DTCCTj) (j = 0 to 23) 941
22.3.8 DTC transfer count reload register j (DTRLDj) (j = 0 to 23) 942
22.3.9 DTC source address register j (DTSARj) (j = 0 to 23) 942
22.3.10 DTC destination address register j (DTDARj) (j = 0 to 23) 942
22.3.11 DTC activation enable register i (DTCENi) (i = 0 to 4) 943
22.3.12 DTC base address register (DTCBAR) 946
22.4 DTC Operation 946
22.4.1 Activation Sources 947
22.4.2 Normal Mode 948
22.4.3 Repeat Mode 951
22.4.4 Chain Transfers 955
22.5 Cautions for DTC 957
22.5.1 Setting DTC Control Data and Vector Table 957
22.5.2 Allocation of DTC Control Data Area and DTC Vector Table Area 957
22.5.3 DTC Pending Instruction 958
22.5.4 Operation when Accessing Data Flash Memory Space 958
22.5.5 Number of DTC Execution Clock Cycles 959
22.5.6 DTC Response Time 960
22.5.7 DTC Activation Sources 960
22.5.8 Operation in Standby Mode Status 961

23. EVENT LINK CONTROLLER (ELC) 962
23.1 Functions of ELC 962
23.2 Configuration of ELC 962

23.3 Registers Controlling ELC 963
23.3.1 Event output destination select register n (ELSELRn) (n = 00 to 21) 964
23.4 ELC Operation 967

24. INTERRUPT FUNCTIONS 969
24.1 Interrupt Function Types 969
24.2 Interrupt Sources and Configuration 969
24.3 Registers Controlling Interrupt Functions 975
24.3.1 Interrupt request flag registers (IF0L, IF0H, IF1L, IF1H, IF2L, IF2H) 979
24.3.2 Interrupt mask flag registers (MK0L, MK0H, MK1L, MK1H, MK2L, MK2H) 981
24.3.3 Priority specification flag registers (PR00L, PR00H, PR01L, PR01H, PR02L, PR02H, PR10L, PR10H, PR11L, PR11H, PR12L, PR12H) 983
24.3.4 External interrupt rising edge enable registers (EGP0, EGP1), external interrupt falling edge enable registers (EGN0, EGN1) 986
24.3.5 Program status word (PSW) 988
24.4 Interrupt Servicing Operations 989
24.4.1 Maskable interrupt request acknowledgment 989
24.4.2 Software interrupt request acknowledgment 992
24.4.3 Multiple interrupt servicing 992
24.4.4 Interrupt servicing during division instruction 996
24.4.5 Interrupt request hold 998

25. KEY INTERRUPT FUNCTION 999
25.1 Functions of Key Interrupt 999
25.2 Configuration of Key Interrupt 999
25.3 Register Controlling Key Interrupt 1001
25.3.1 Key return mode register (KRM) 1001
25.3.2 Port mode register 7 (PM7) 1002

26. STANDBY FUNCTION 1003
26.1 Standby Function 1003
26.2 Registers controlling standby function 1004
26.3 Standby Function Operation 1005
26.3.1 HALT mode 1005
26.3.2 STOP mode 1010
26.3.3 SNOOZE mode 1015

27. RESET FUNCTION 1019
27.1 Timing of Reset Operation 1021
27.2 Register for Confirming Reset Source 1025
27.2.1 Reset control flag register (RESF) 1025

28. POWER-ON-RESET CIRCUIT 1028
28.1 Functions of Power-on-reset Circuit 1028
28.2 Configuration of Power-on-reset Circuit 1029
28.3 Operation of Power-on-reset Circuit 1029

29. VOLTAGE DETECTOR 1033
29.1 Functions of Voltage Detector 1033

29.2 Configuration of Voltage Detector 1034
29.3 Registers Controlling Voltage Detector 1034
29.3.1 Voltage detection register (LVIM) 1035
29.3.2 Voltage detection level register (LVIS) 1036
29.4 Operation of Voltage Detector 1039
29.4.1 When used as reset mode 1039
29.4.2 When used as interrupt mode 1041
29.4.3 When used as interrupt and reset mode 1043
29.5 Cautions for Voltage Detector 1049

30. SAFETY FUNCTIONS 1051
30.1 Overview of Safety Functions 1051
30.2 Registers Used by Safety Functions 1052
30.3 Operation of Safety Functions 1052
30.3.1 Flash memory CRC operation function (high-speed CRC) 1052
30.3.1.1 Flash memory CRC control register (CRC0CTL) 1053
30.3.1.2 Flash memory CRC operation result register (PGCRCL) 1054
30.3.2 CRC operation function (general-purpose CRC) 1056
30.3.2.1 CRC input register (CRCIN) 1057
30.3.2.2 CRC data register (CRCD) 1058
30.3.3 RAM parity error detection function 1059
30.3.3.1 RAM parity error control register (RPECTL) 1059
30.3.4 RAM guard function 1061
30.3.4.1 Invalid memory access detection control register (IAWCTL) 1061
30.3.5 SFR guard function 1062
30.3.5.1 Invalid memory access detection control register (IAWCTL) 1062
30.3.6 Invalid memory access detection function 1063
30.3.6.1 Invalid memory access detection control register (IAWCTL) 1064
30.3.7 Frequency detection function 1065
30.3.7.1 Timer I/O select register 0 (TIOS0) 1066
30.3.8 A/D test function 1067
30.3.8.1 A/D test register (ADTES) 1069
30.3.8.2 Analog input channel specification register (ADS) 1070
30.3.9 Digital output signal level detection function for I/O pins 1072
30.3.9.1 Port mode select register (PMS) 1072

31. REGULATOR 1073
31.1 Regulator Overview 1073

32. OPTION BYTE 1074
32.1 Functions of Option Bytes 1074
32.1.1 User option byte (000C0H to 000C2H/010C0H to 010C2H) 1074
32.1.2 On-chip debug option byte (000C3H/ 010C3H) 1075
32.2 Format of User Option Byte 1076
32.3 Format of On-chip Debug Option Byte 1082
32.4 Setting of Option Byte 1083

33. FLASH MEMORY 1084
33.1 Serial Programming Using Flash Memory Programmer 1085

33.1.1 Programming Environment 1087
33.1.2 Communication Mode 1087
33.2 Serial Programming Using External Device (that Incorporates UART) 1088
33.2.1 Programming Environment 1088
33.2.2 Communication Mode 1089
33.3 Connection of Pins on Board 1090
33.3.1 P40/TOOL0 pin 1090
33.3.2 $\overline{\text{RESET}}$ pin 1090
33.3.3 Port pins 1091
33.3.4 REGC pin 1091
33.3.5 X1 and X2 pins 1091
33.3.6 Power supply 1091
33.4 Programming Method 1092
33.4.1 Serial programming procedure 1092
33.4.2 Flash memory programming mode 1093
33.4.3 Selecting communication mode 1095
33.4.4 Communication commands 1096
33.5 Processing Time for Each Command When PG-FP5 Is in Use (Reference Value) 1098
33.6 Self-Programming 1099
33.6.1 Self-programming procedure 1100
33.6.2 Boot swap function 1101
33.6.3 Flash shield window function 1103
33.7 Security Settings 1104
33.8 Data Flash 1106
33.8.1 Data flash overview 1106
33.8.2 Register controlling data flash memory 1107
33.8.2.1 Data flash control register (DFLCTL) 1107
33.8.3 Procedure for accessing data flash memory 1108

34. ON-CHIP DEBUG FUNCTION 1109
34.1 Connecting E1 On-chip Debugging Emulator 1109
34.2 On-Chip Debug Security ID 1110
34.3 Securing of User Resources 1110

35. BCD CORRECTION CIRCUIT 1112
35.1 BCD Correction Circuit Function 1112
35.2 Registers Used by BCD Correction Circuit 1112
35.2.1 BCD correction result register (BCDADJ) 1112
35.3 BCD Correction Circuit Operation 1113

36. INSTRUCTION SET 1115
36.1 Conventions Used in Operation List 1116
36.1.1 Operand identifiers and specification methods 1116
36.1.2 Description of operation column 1117
36.1.3 Description of flag operation column 1118
36.1.4 PREFIX instruction 1118
36.2 Operation List 1119

37. ELECTRICAL SPECIFICATIONS (T_A = -40 to +85°C) 1137
37.1 Absolute Maximum Ratings 1138
37.2 Oscillator Characteristics 1140
37.2.1 X1, XT1 characteristics 1140
37.2.2 On-chip oscillator characteristics 1140
37.3 DC Characteristics 1141
37.3.1 Pin characteristics 1141
37.3.2 Supply current characteristics 1146
37.4 AC Characteristics 1152
37.5 Peripheral Functions Characteristics 1159
37.5.1 Serial array unit 1159
37.5.2 Serial interface IICA 1187
37.6 Analog Characteristics 1191
37.6.1 A/D converter characteristics 1191
37.6.2 Temperature sensor characteristics/internal reference voltage characteristic 1195
37.6.3 D/A converter characteristics 1195
37.6.4 Comparator 1196
37.6.5 PGA 1196
37.6.6 POR circuit characteristics 1197
37.6.7 LVD circuit characteristics 1198
37.6.8 Power supply voltage rising slope characteristics 1199
37.7 RAM Data Retention Characteristics 1200
37.8 Flash Memory Programming Characteristics 1200
37.9 Dedicated Flash Memory Programmer Communication (UART) 1200
37.10 Timing of Entry to Flash Memory Programming Modes 1201

38. ELECTRICAL SPECIFICATIONS (G: T_A = -40 to +105°C) 1202
38.1 Absolute Maximum Ratings 1204
38.2 Oscillator Characteristics 1206
38.2.1 X1, XT1 characteristics 1206
38.2.2 On-chip oscillator characteristics 1206
38.3 DC Characteristics 1207
38.3.1 Pin characteristics 1207
38.3.2 Supply current characteristics 1212
38.4 AC Characteristics 1218
38.5 Peripheral Functions Characteristics 1224
38.5.1 Serial array unit 1224
38.5.2 Serial interface IICA 1247
38.6 Analog Characteristics 1248
38.6.1 A/D converter characteristics 1248
38.6.2 Temperature sensor characteristics/internal reference voltage characteristic 1252
38.6.3 D/A converter characteristics 1252
38.6.4 Comparator 1253
38.6.5 PGA 1253
38.6.6 POR circuit characteristics 1254
38.6.7 LVD circuit characteristics 1255
38.6.8 Power supply voltage rising slope characteristics 1256
38.7 RAM Data Retention Characteristics 1256
38.8 Flash Memory Programming Characteristics 1256

38.9 Dedicated Flash Memory Programmer Communication (UART) 1257
38.10 Timing of Entry to Flash Memory Programming Modes 1258

39. PACKAGE DRAWINGS 1259
39.1 24-pin products 1259
39.2 32-pin products 1262
39.3 36-pin products 1266
39.4 48-pin products 1267
39.5 64-pin products 1269

APPENDIX A REVISION HISTORY 1271
A.1 Major Revisions in This Edition 1271
A.2 Revision History of Preceding Editions 1272

CHAPTER 1 OUTLINE

1.1 Features

Ultra-low power consumption technology

- V_{DD} = single power supply voltage of 1.6 to 5.5 V which can operate a 1.8 V device at a low voltage
- HALT mode
- STOP mode
- SNOOZE mode

RL78 CPU core

- CISC architecture with 3-stage pipeline
- Minimum instruction execution time: Can be changed from high speed (0.03125 μs: @ 32 MHz operation with high-speed on-chip oscillator) to ultra-low speed (30.5 μs: @ 32.768 kHz operation with subsystem clock)
- Multiply/divide/multiply & accumulate instructions are supported.
- Address space: 1 MB
- General-purpose registers: (8-bit register × 8) × 4 banks
- On-chip RAM: 5.5 KB

Code flash memory

- Code flash memory: 32/64 KB
- Block size: 1 KB
- Prohibition of block erase and rewriting (security function)
- On-chip debug function
- Self-programming (with boot swap function/flash shield window function)

Data flash memory

- Data flash memory: 4 KB
- Back ground operation (BGO): Instructions can be executed from the program memory while rewriting the data flash memory.
- Number of rewrites: 1,000,000 times (TYP.)
- Voltage of rewrites: V_{DD} = 1.8 to 5.5 V

High-speed on-chip oscillator

- Select from 64 MHz, 48 MHz, 32 MHz, 24 MHz, 16 MHz, 12 MHz, 8 MHz, 6 MHz, 4 MHz, 3 MHz, 2 MHz, and 1 MHz
- High accuracy: ±1.0% (V_{DD} = 1.8 to 5.5 V, T_A = -20 to +85°C)

Operating ambient temperature

- T_A = –40 to +85°C (A: Consumer applications)
- T_A = –40 to +105°C (G: Industrial applications)

Power management and reset function

- On-chip power-on-reset (POR) circuit
- On-chip voltage detector (LVD) (Select interrupt and reset from 14 levels)

Data transfer controller (DTC)

- Transfer modes: Normal transfer mode, repeat transfer mode, block transfer mode
- Activation sources: Activated by interrupt sources.
- Chain transfer function

Event link controller (ELC)

- Event signals of 22 types can be linked to the specified peripheral function.

Serial interfaces

- Simplified SPI (CSI [Note]): 3 to 6 channels
- UART/UART (LIN-bus supported): 3 channels
- I^2C/simplified I^2C: 3 to 6 channels
- IrDA: 1 channel

Timer

- 16-bit timer: 9 channels
  (Timer Array Unit (TAU): 4 channels, Timer RJ: 1 channel, Timer RD: 2 channels (with PWMOPA), Timer RG: 1 channel, Timer RX: 1 channel)
- 12-bit interval timer: 1 channel
- Real-time clock: 1 channel (calendar for 99 years, alarm function, and clock correction function)
- Watchdog timer: 1 channel (operable with the dedicated low-speed on-chip oscillator)

A/D converter

- 8/10-bit resolution A/D converter (V_{DD} = 1.6 to 5.5 V)
- Analog input: 8 to 17 channels
- Internal reference voltage (1.45 V) and temperature sensor

D/A converter

- 8-bit resolution D/A converter (V_{DD} = 1.6 to 5.5 V)
- Analog output: 1 or 2 channels
- Output voltage: 0 V to V_{DD}
- Real-time output function

Comparator

- 2 channels (pin selector is provided for 1 channel)
- Incorporates a function for the output of a timer window in combination with the timer array unit.
- The external reference voltage or internal reference voltage can be selected as the reference voltage.

Programmable gain amplifier (PGA)

- 1 channel

Note Although the CSI function is generally called SPI, it is also called CSI in this product, so it is referred to as such in this manual.

I/O port

- I/O port: 20 to 58 (N-ch open drain I/O [withstand voltage of 6 V]: 2 to 4, N-ch open drain I/O [V_{DD} withstand voltage/EV_{DD} withstand voltage]: 10 to 16)
- Can be set to N-ch open drain, TTL input buffer, and on-chip pull-up resistor
- Different potential interface: Can connect to a 1.8/2.5/3 V device
- On-chip key interrupt function
- On-chip clock output/buzzer output controller

Others

- On-chip BCD (binary-coded decimal) correction circuit

Remark The functions mounted depend on the product. See **1.6 Outline of Functions**.

○ ROM, RAM capacities

Flash ROM	Data flash	RAM	RL78/G1F				
			24 pins	32 pins	36 pins	48 pins	64 pins
64 KB	4 KB	5.5 KB Note	R5F11B7E	R5F11BBE	R5F11BCE	R5F11BGE	R5F11BLE
32 KB	4 KB	5.5 KB Note	R5F11B7C	R5F11BBC	R5F11BCC	R5F11BGC	R5F11BLC

Note This is about 4.5 KB when performing self-programming and rewriting the data flash memory (For details, see **CHAPTER 3 CPU ARCHITECTURE**).

1.2 Ordering Information

<R>

Figure 1 - 1 Part Number, Memory Size, and Package of RL78/G1F

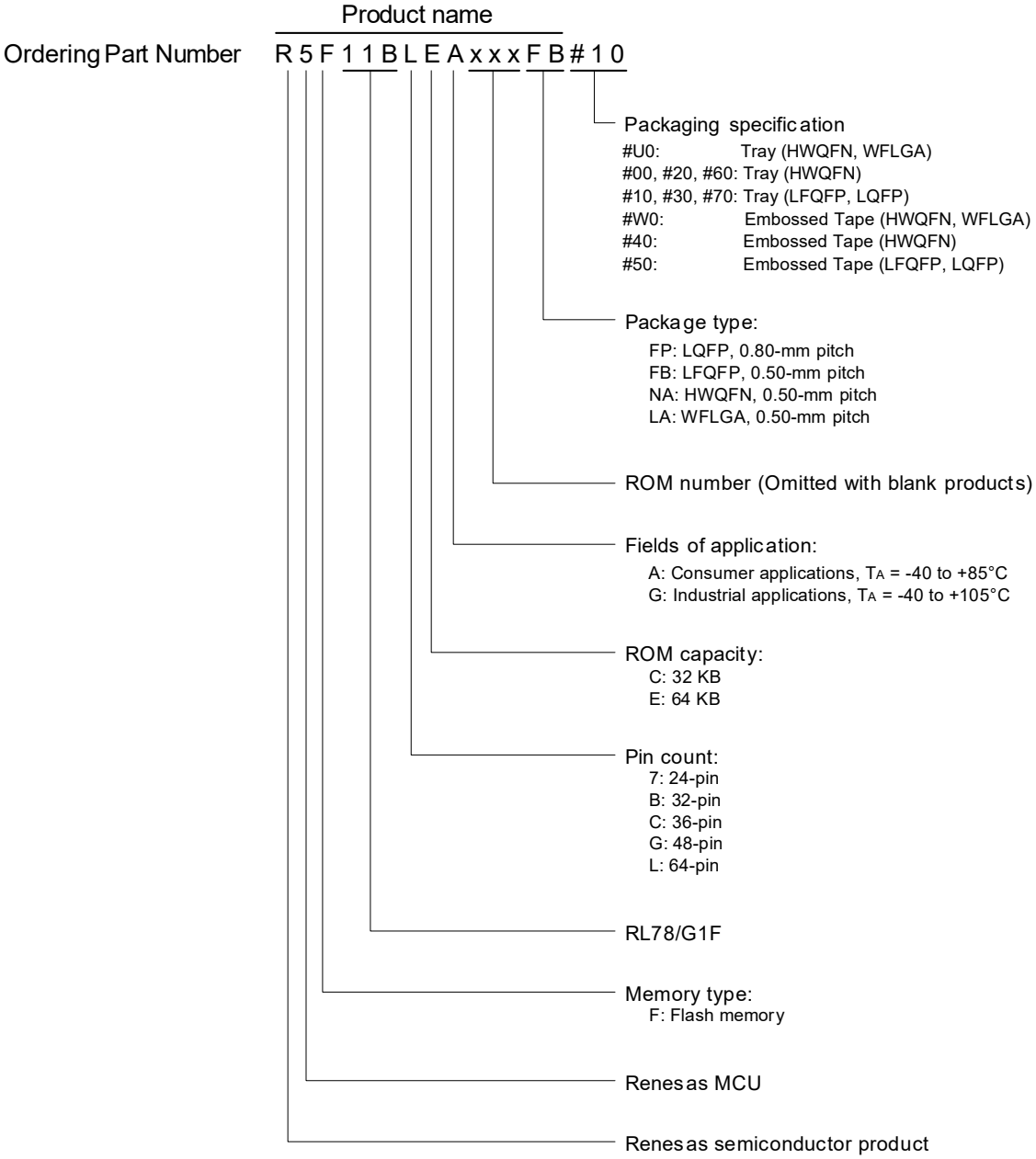

Table 1 - 1 List of Ordering Part Numbers

Pin count	Package	Fields of Application Note	Ordering Part Number		RENESAS Code
			Product name	Packaging specification	
24 pins	24-pin plastic HWQFN (4 × 4 mm, 0.5 mm pitch)	A	R5F11B7CANA, R5F11B7EANA	#U0, #W0	PWQN0024KE-A
<R>				#00, #20, #40, #60	PWQN0024KF-A PWQN0024KH-A
		G	R5F11B7CGNA, R5F11B7EGNA	#U0, #W0	PWQN0024KE-A
<R>				#00, #20, #40, #60	PWQN0024KF-A PWQN0024KH-A
<R> 32 pins	32-pin plastic HWQFN (5 × 5 mm, 0.5 mm pitch)	A	R5F11BBCANA, R5F11BBEANA	#00, #20, #40, #60	PWQN0032KE-A PWQN0032KG-A
		G	R5F11BBCGNA, R5F11BBEGNA		
<R>	32-pin plastic LQFP (7 × 7 mm, 0.8 mm pitch)	A	R5F11BBCAFP, R5F11BBEAFP	#10, #50, #70	PLQP0032GB-A PLQP0032GE-A
				#30	PLQP0032GB-A
<R>		G	R5F11BBCGFP, R5F11BBEGFP	#10, #50, #70	PLQP0032GB-A PLQP0032GE-A
				#30	PLQP0032GB-A
36 pins	36-pin plastic WFLGA (4 × 4 mm, 0.5 mm pitch)	A	R5F11BCCALA, R5F11BCEALA	#U0, #W0	PWLG0036KA-A
		G	R5F11BCCGLA, R5F11BCEGLA		
<R> 48 pins	48-pin plastic LFQFP (7 × 7 mm, 0.5 mm pitch)	A	R5F11BGCAFB, R5F11BGEAFB	#10, #50, #70	PLQP0048KB-B PLQP0048KL-A
				#30	PLQP0048KB-B
<R>		G	R5F11BGCGFB, R5F11BGEGFB	#10, #50, #70	PLQP0048KB-B PLQP0048KL-A
				#30	PLQP0048KB-B
<R> 64 pins	64-pin plastic LFQFP (10 × 10 mm, 0.5 mm pitch)	A	R5F11BLCAFB, R5F11BLEAFB	#10, #50, #70	PLQP0064KB-C PLQP0064KL-A
				#30	PLQP0064KB-C
<R>		G	R5F11BLCGFB, R5F11BLEGFB	#10, #50, #70	PLQP0064KB-C PLQP0064KL-A
				#30	PLQP0064KB-C

Note For the fields of application, refer to **Figure 1 - 1 Part Number, Memory Size, and Package of RL78/G1F**.

Caution **The ordering part numbers represent the numbers at the time of publication. For the latest ordering part numbers, refer to the target product page of the Renesas Electronics website.**

1.3 Pin Configuration (Top View)

1.3.1 24-pin products

• 24-pin plastic HWQFN (4 × 4 mm, 0.5-mm pitch)

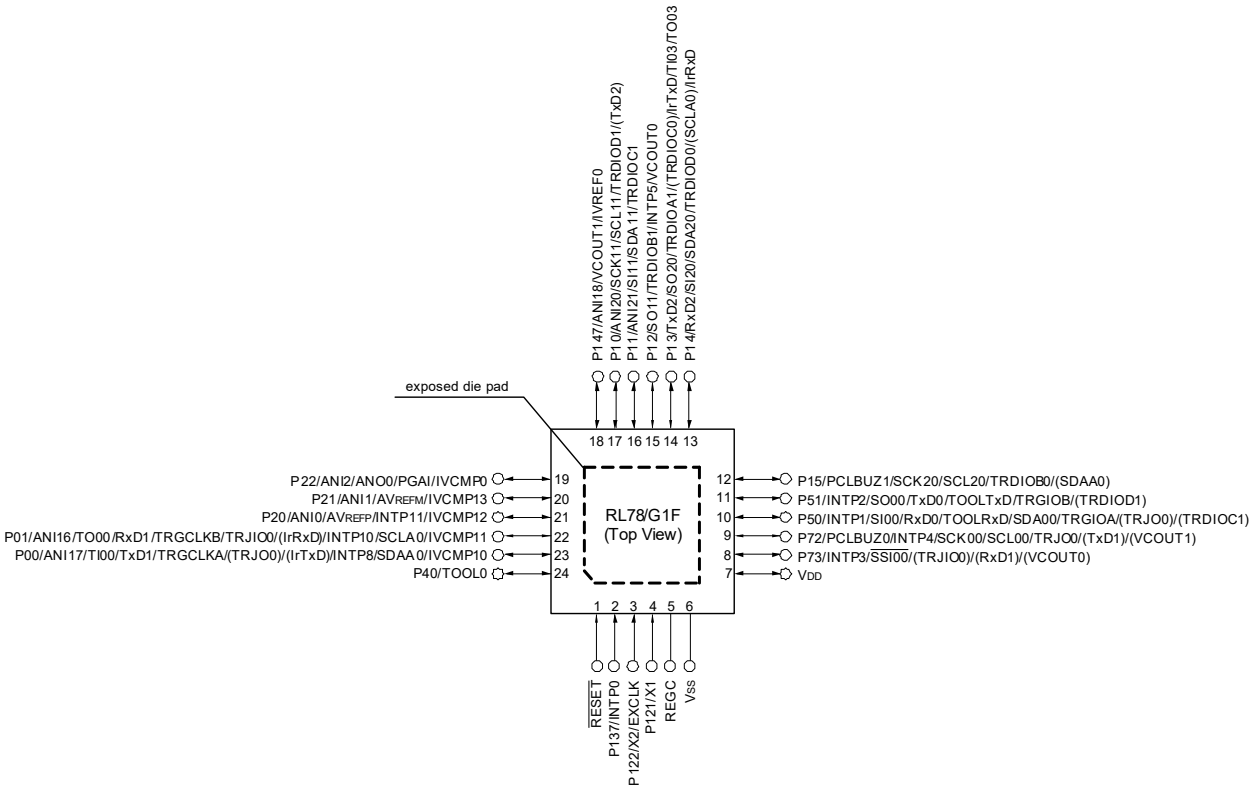

Caution Connect the REGC pin to Vss pin via a capacitor (0.47 to 1 μF).

Remark 1. For pin identification, see **1.4 Pin Identification**.

Remark 2. Functions in parentheses in the above figure can be assigned via settings in the peripheral I/O redirection registers 0 to 3 (PIOR0 to PIOR3).

1.3.2 32-pin products

• 32-pin plastic HWQFN (5 × 5 mm, 0.5-mm pitch)

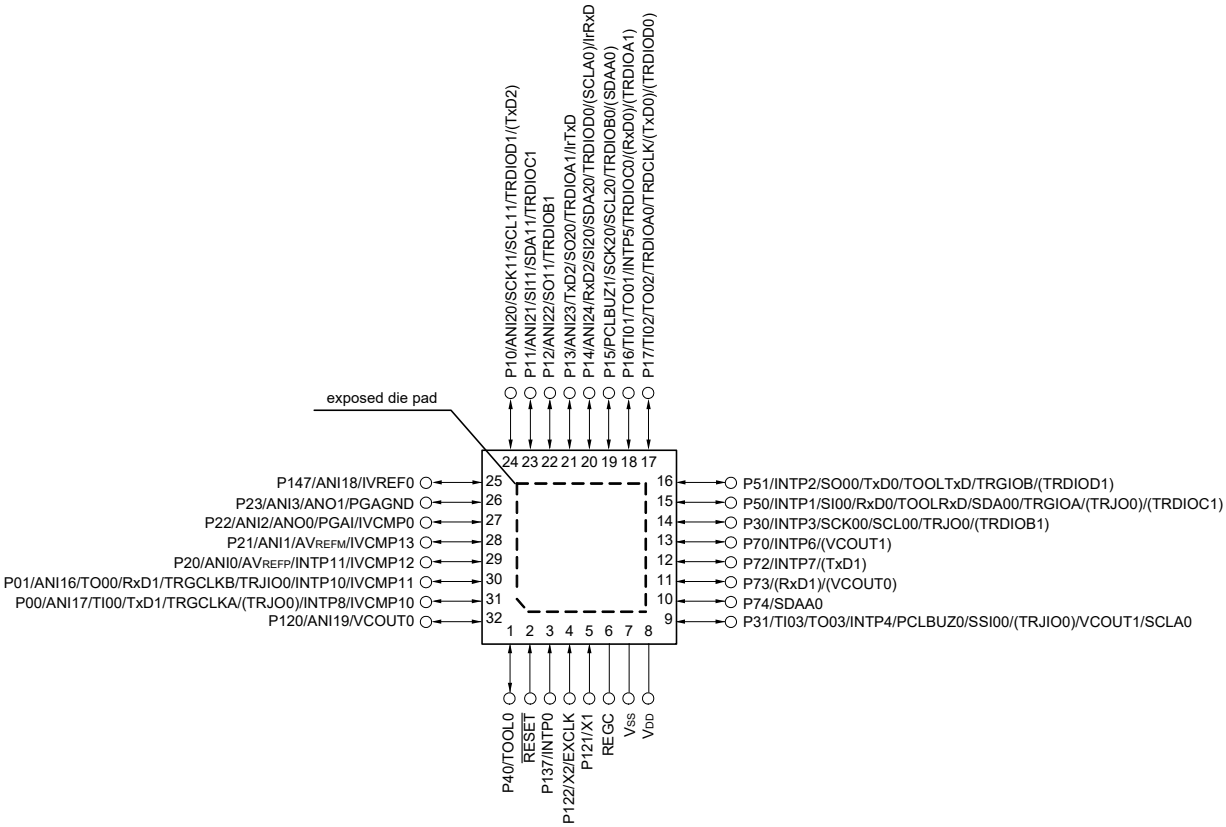

Caution Connect the REGC pin to Vss pin via a capacitor (0.47 to 1 μF).

Remark 1. Functions in parentheses in the above figure can be assigned via settings in the peripheral I/O redirection registers 0 to 3 (PIOR0 to PIOR3).

Remark 2. It is recommended to connect an exposed die pad to Vss.

• 32-pin plastic LQFP (7 × 7 mm, 0.8-mm pitch)

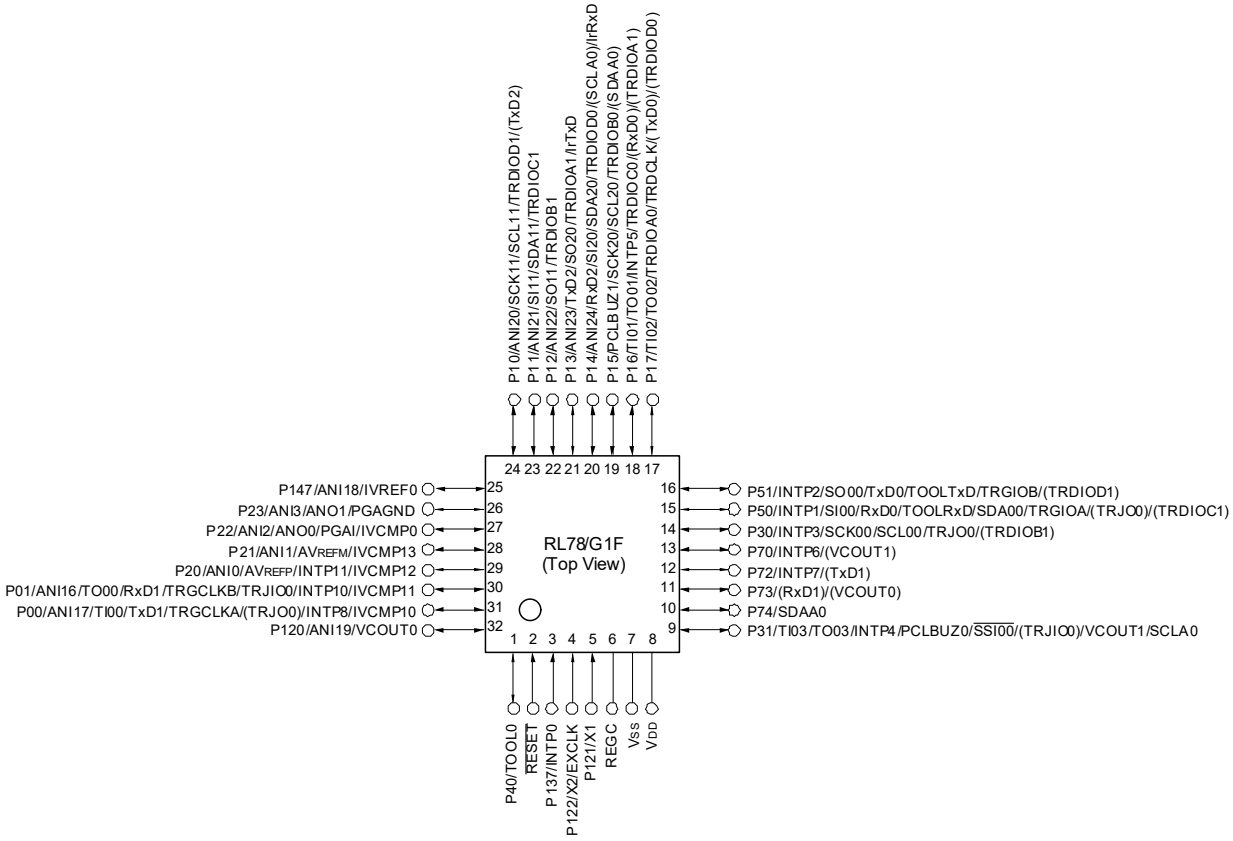

Caution Connect the REGC pin to Vss pin via a capacitor (0.47 to 1 μF).

Remark 1. For pin identification, see **1.4 Pin Identification**.

Remark 2. Functions in parentheses in the above figure can be assigned via settings in the peripheral I/O redirection registers 0 to 3 (PIOR0 to PIOR3).

1.3.3 36-pin products

• 36-pin plastic WFLGA (4 × 4 mm, 0.5-mm pitch)

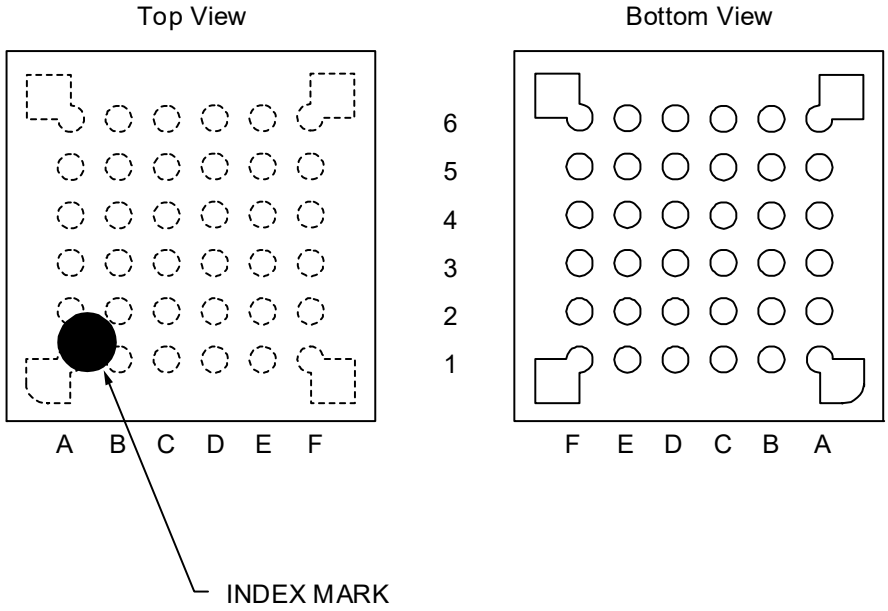

	A	B	C	D	E	F	
6	EV_{DD0}	V_{DD}	P121/X1	P122/X2/EXCLK	P137/INTP0	P40/TOOL0	6
5	P61/SDAA0	P60/SCLA0	V_{SS}	REGC	RESET	P124/XT2/ EXCLKS	5
4	P31/TI03/TO03/ INTP4/PCLBUZ0/ $\overline{SSI00}$/(TRJIO0)/ VCOUT1	P14/ANI24/RxD2/ SI20/SDA20/ TRDIOD0/ (SCLA0)/IrRxD	P20/ANI0/ AV_{REFP}/IVCMP12/ INTP11	P21/ANI1/ AV_{REFM}/IVCMP13	P01/ANI16/TO00/ RxD1/TRGCLKB/ TRJIO0/INTP10/ IVCMP11	P123/XT1	4
3	P50/INTP1/SI00/ RxD0/TOOLRxD/ SDA00/TRGIOA/ (TRJO0)/ (TRDIOC1)	P70/INTP6/ (VCOUT0)/ (VCOUT1)	P15/PCLBUZ1/ SCK20/SCL20/ TRDIOB0/ (SDAA0)	P23/ANI3/ANO1/ PGAGND	P00/ANI17/TI00/ TxD1/TRGCLKA/ (TRJO0)/INTP8/ IVCMP10	P120/ANI19/ VCOUT0	3
2	P30/INTP3/ RTC1HZ/SCK00/ SCL00/TRJO0/ (TRDIOB1)	P16/TI01/TO01/ INTP5/TRDIOC0/ (RxD0)/ (TRDIOA1)	P12/ANI22/SO11/ TRDIOB1	P11/ANI21/SI11/ SDA11/TRDIOC1	P24/ANI4	P22/ANI2/ANO0/ PGAI/IVCMP0	2
1	P51/INTP2/SO00/ TxD0/TOOLTxD/ TRGIOB/ (TRDIOD1)	P17/TI02/TO02/ TRDIOA0/ TRDCLK0/(TxD0)/ (TRDIOD0)	P13/ANI23/TxD2/ SO20/TRDIOA1/ IrTxD	P10/ANI20/ SCK11/SCL11/ TRDIOD1/(TxD2)	P147/ANI18/ IVREF0	P25/ANI5	1
	A	B	C	D	E	F	

Caution 1. Connect the REGC pin to V_{SS} pin via a capacitor (0.47 to 1 μF).

Caution 2. Make V_{DD} pin the potential that is higher than EV_{DD0} pin.

Remark 1. For pin identification, see **1.4 Pin Identification**.

Remark 2. Functions in parentheses in the above figure can be assigned via settings in the peripheral I/O redirection registers 0 to 3 (PIOR0 to PIOR3).

Remark 3. When using the microcontroller for an application where the noise generated inside the microcontroller must be reduced, it is recommended to supply separate powers to the V_{DD} and EV_{DD0} pins.

1.3.4 48-pin products

• 48-pin plastic LFQFP (7 × 7 mm, 0.5-mm pitch)

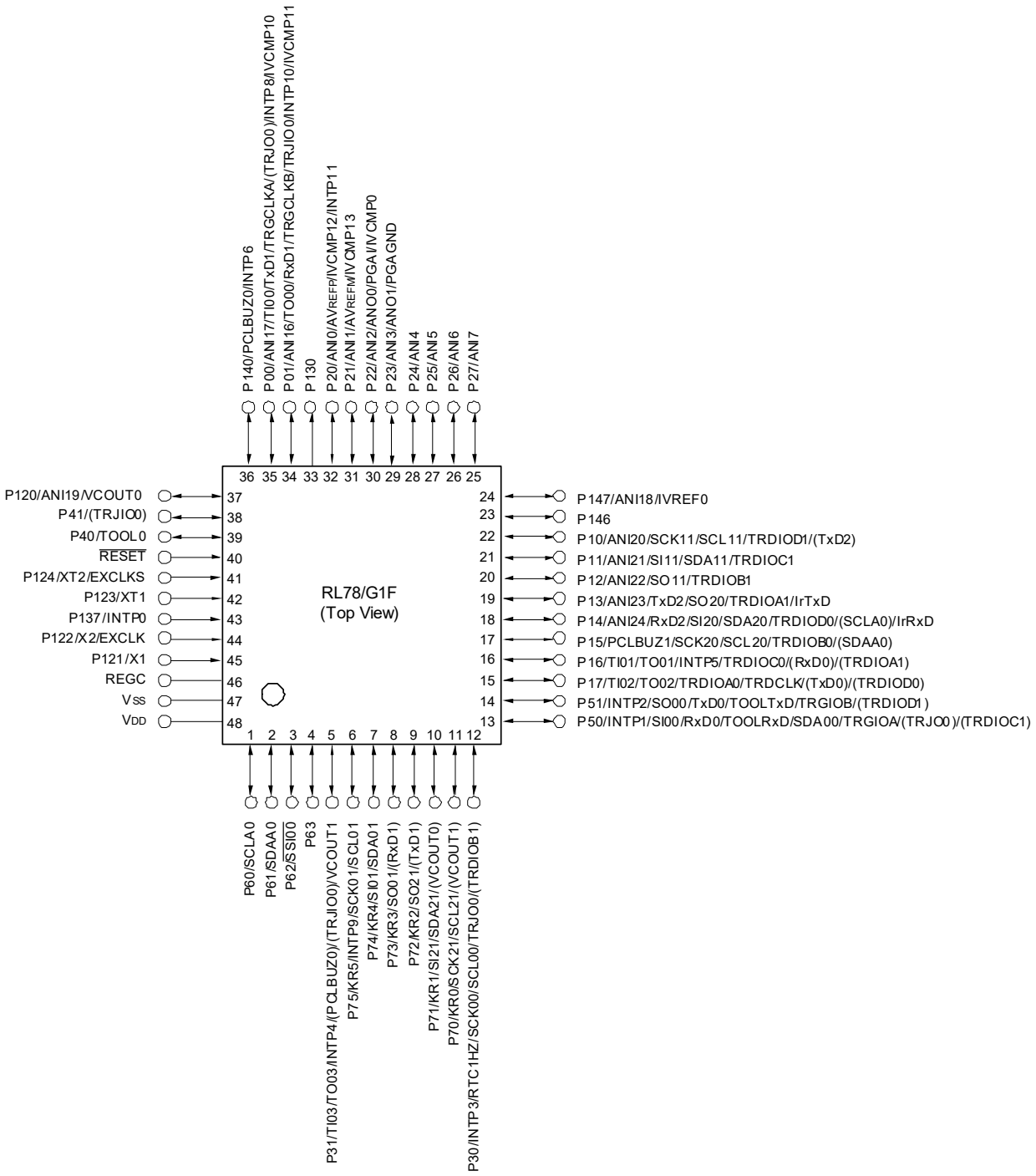

Caution Connect the REGC pin to Vss pin via a capacitor (0.47 to 1 μF).

Remark 1. For pin identification, see **1.4 Pin Identification**.

Remark 2. Functions in parentheses in the above figure can be assigned via settings in the peripheral I/O redirection registers 0 to 3 (PIOR0 to PIOR3).

1.3.5 64-pin products

• 64-pin plastic LFQFP (10 × 10 mm, 0.5-mm pitch)

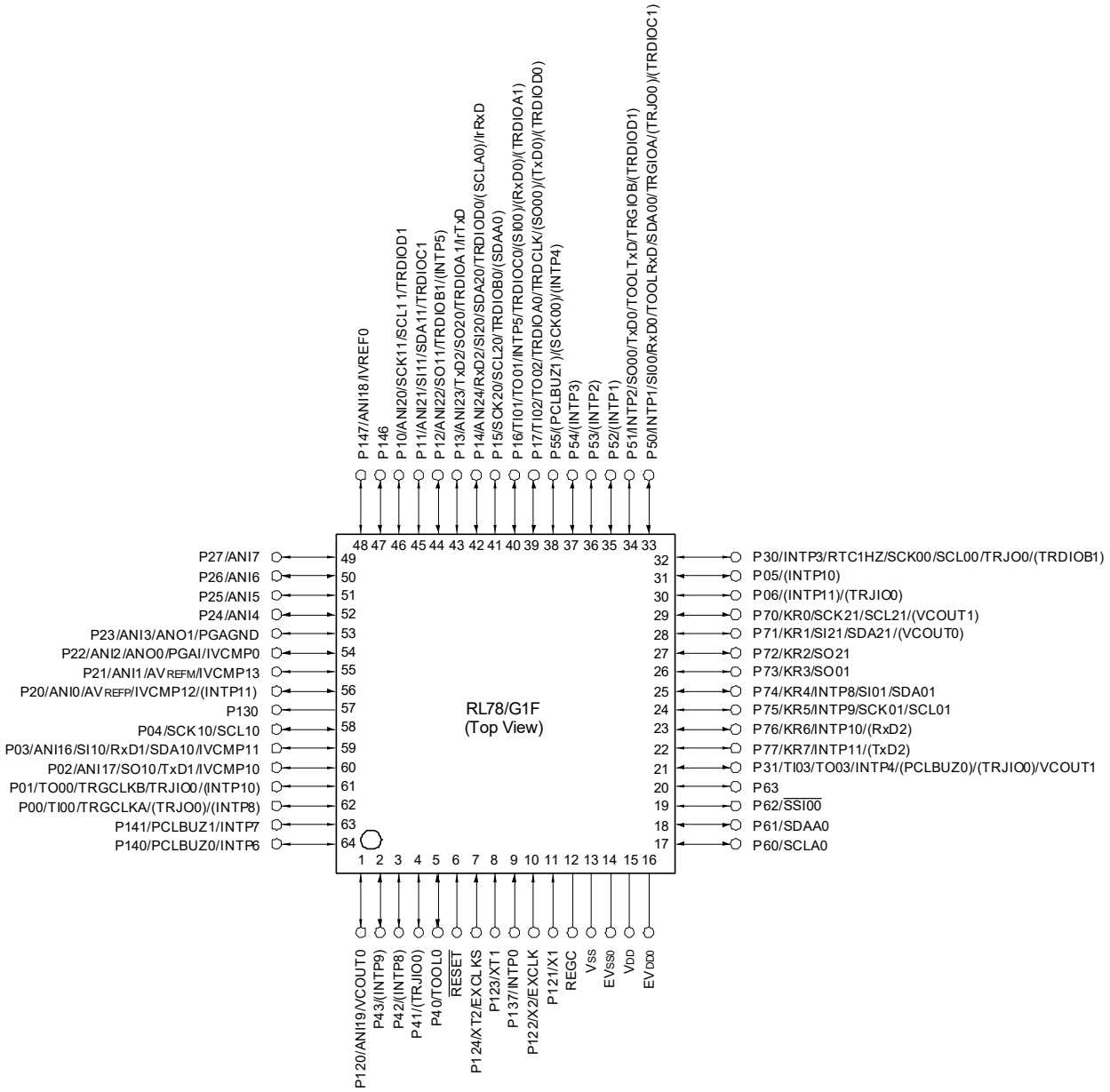

Caution 1. Make EV_{SS0} pin the same potential as V_{SS} pin.

Caution 2. Make V_{DD} pin the potential that is higher than EV_{DD0} pin.

Caution 3. Connect the REGC pin to V_{SS} pin via a capacitor (0.47 to 1 μF).

Remark 1. For pin identification, see **1.4 Pin Identification**.

Remark 2. When using the microcontroller for an application where the noise generated inside the microcontroller must be reduced, it is recommended to supply separate powers to the V_{DD} and EV_{DD0} pins and connect the V_{SS} and EV_{SS0} pins to separate ground lines.

Remark 3. Functions in parentheses in the above figure can be assigned via settings in the peripheral I/O redirection registers 0 to 3 (PIOR0 to PIOR3).

1.4 Pin Identification

ANI0 to ANI7:	Analog input
ANI16 to ANI24:	Analog input
ANO0, ANO1:	Analog output
AV_{REFM}:	Analog reference voltage minus
AV_{REFP}:	Analog reference voltage plus
EV_{DD0}:	Power supply for port
EV_{SS0}:	Ground for port
EXCLK:	External clock input (main system clock)
EXCLKS:	External clock input (subsystem clock)
INTP0 to INTP11:	External interrupt input
IrRxD:	Receive Data for IrDA
IrTxD:	Transmit Data for IrDA
IVCMP0:	Comparator 0 input
IVCMP10 to IVCMP13:	Comparator 1 input / reference input
IVREF0:	Comparator 0 reference input
KR0 to KR7:	Key return
P00 to P06:	Port 0
P10 to P17:	Port 1
P20 to P27:	Port 2
P30, P31:	Port 3
P40 to P43:	Port 4
P50 to P55:	Port 5
P60 to P63:	Port 6
P70 to P77:	Port 7
P120 to P124:	Port 12
P130, P137	Port 13
P140, P141, P146, P147:	Port 14
PCLBUZ0, PCLBUZ1:	Programmable clock output/ buzzer output
REGC:	Regulator capacitance
$\overline{\text{RESET}}$:	Reset
PGAI:	PGA input
PGAGND:	PGA input
RTC1HZ:	Real-time clock correction clock (1 Hz) output
RxD0 to RxD2:	Receive data
SCK00, SCK01, SCK10:	Serial clock input/output
SCK11, SCK20, SCK21:	Serial clock input/output
SCLA0:	Serial clock input/output
SCL00, SCL01, SCL10, SCL11:	Serial clock output
SCL20,SCL21:	Serial clock output
SDAA0:	Serial data input/output
SDA00, SDA01, SDA10:	Serial data input/output
SDA11, SDA20, SDA21:	Serial data input/output
SI00, SI01, SI10, SI11:	Serial data input
SI20, SI21:	Serial data input
SO00, SO01, SO10:	Serial data output
SO11, SO20, SO21:	Serial data output
$\overline{\text{SSI00}}$:	Serial interface chip select input
TI00 to TI03:	Timer input
TO00 to TO03:	Timer output
TRJO0:	Timer output
TOOL0:	Data input/output for tool
TOOLRxD, TOOLTxD:	Data input/output for external device
TRDCLK, TRGCLKA:	Timer external input clock
TRGCLKB:	Timer external Input clock
TRDIOA0, TRDIOB0:	Timer input/output
TRDIOC0, TRDIOD0:	Timer input/output
TRDIOA1, TRDIOB1:	Timer input/output
TRDIOC1, TRDIOD1:	Timer input/output
TRGIOA, TRGIOB, TRJIO0:	Timer input/output
TxD0 to TxD2:	Transmit data
VCOUT0, VCOUT1:	Comparator output
V_{DD}:	Power supply
V_{SS}:	Ground
X1, X2:	Crystal oscillator (main system clock)
XT1, XT2:	Crystal oscillator (subsystem clock)

1.5 Block Diagram

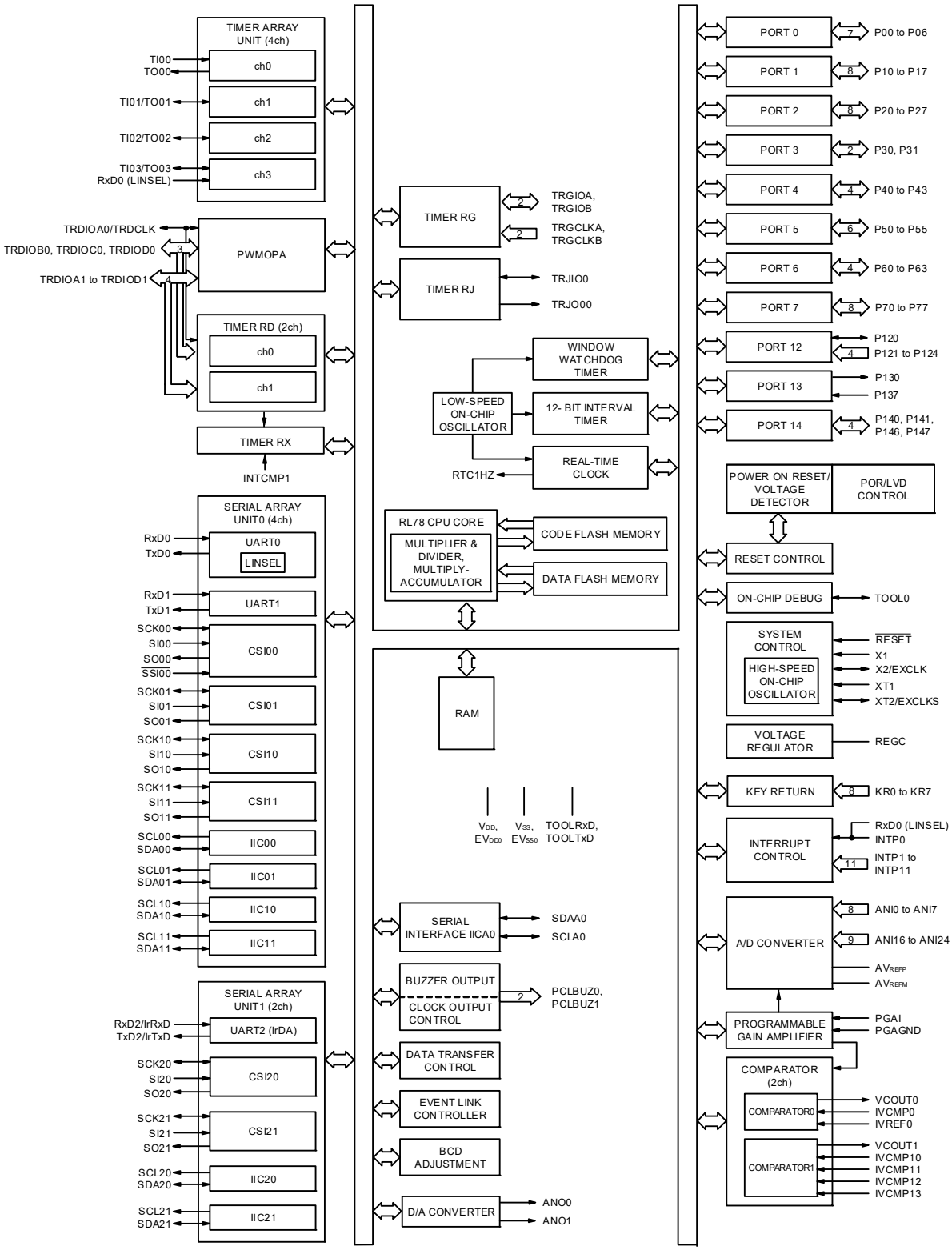

Remark Block diagram of 64-pin products is shown as an example. For difference of the block diagram other than 64-pin products, refer to **1.6 Outline of Functions**.

1.6 Outline of Functions

Caution This outline describes the functions at the time when Peripheral I/O redirection register 0, 1 (PIOR0, 1) are set to 00H.

(1/2)

Item		24-pin	32-pin	36-pin	48-pin	64-pin
		R5F11B7x (x = C, E)	R5F11BBx (x = C, E)	R5F11BCx (x = C, E)	R5F11BGx (x = C, E)	R5F11BLx (x = C, E)
Code flash memory (KB)		32, 64	32, 64	32, 64	32, 64	32, 64
Data flash memory (KB)		4	4	4	4	4
RAM (KB)		5.5 Note	5.5 Note	5.5 Note	5.5 Note	5.5 Note
Address space		1 MB				
Main system clock	High-speed system clock	X1 (crystal/ceramic) oscillation, external main system clock input (EXCLK) HS (high-speed main) mode: 1 to 20 MHz (V_{DD} = 2.7 to 5.5 V), HS (high-speed main) mode: 1 to 16 MHz (V_{DD} = 2.4 to 5.5 V), LS (low-speed main) mode: 1 to 8 MHz (V_{DD} = 1.8 to 2.7 V), LV (low-voltage main) mode: 1 to 4 MHz (V_{DD} = 1.6 to 1.8 V)				
	High-speed on-chip oscillator clock (f_{IH})	HS (high-speed main) mode: 1 to 32 MHz (V_{DD} = 2.7 to 5.5 V), HS (high-speed main) mode: 1 to 16 MHz (V_{DD} = 2.4 to 5.5 V), LS (low-speed main) mode: 1 to 8 MHz (V_{DD} = 1.8 to 5.5 V), LV (low-voltage main) mode: 1 to 4 MHz (V_{DD} = 1.6 to 5.5 V)				
Subsystem clock		—		XT1 (crystal) oscillation, external subsystem clock input (EXCLKS) 32.768 kHz		
Low-speed on-chip oscillator clock		15 kHz (TYP.): V_{DD} = 1.6 to 5.5 V				
General-purpose register		8 bits × 32 registers (8 bits × 8 registers × 4 banks)				
Minimum instruction execution time		0.03125 μs (High-speed on-chip oscillator clock: f_{IH} = 32 MHz operation)				
		0.05 μs (High-speed system clock: f_{MX} = 20 MHz operation)				
		—		30.5 μs (Subsystem clock: f_{SUB} = 32.768 kHz operation)		
Instruction set		• Data transfer (8/16 bits) • Adder and subtractor/logical operation (8/16 bits) • Multiplication (8 bits × 8 bits, 16 bits × 16 bits), Division (16 bits ÷ 16 bits, 32 bits ÷ 32 bits) • Multiplication and Accumulation (16 bits × 16 bits + 32 bits) • Rotate, barrel shift, and bit manipulation (Set, reset, test, and Boolean operation), etc.				
I/O port	Total	20	28	31	44	58
	CMOS I/O	17 (N-ch O.D. output [V_{DD} withstand voltage]: 10)	25 (N-ch O.D. output [V_{DD} withstand voltage]: 12)	24 (N-ch O.D. output [V_{DD} withstand voltage]: 10)	34 (N-ch O.D. output [V_{DD} withstand voltage]: 12)	48 (N-ch O.D. output [V_{DD} withstand voltage]: 12)
	CMOS input	3	3	5	5	5
	CMOS output	—	—	—	1	1
	N-ch open-drain I/O (6 V tolerance)	—	—	2	4	4
Timer	16-bit timer	9 channels (TAU: 4 channels, Timer RJ: 1 channel, Timer RD: 2 channels (with PWMOPA), Timer RX: 1 channel, Timer RG: 1 channel)				
	Watchdog timer	1 channel				
	Real-time clock (RTC)	1 channel				
	12-bit interval timer	1 channel				
	Timer output	Timer outputs: 13 channels PWM outputs: 8 channels	Timer outputs: 16 channels PWM outputs: 9 channels			
	RTC output	—		1 • 1 Hz (subsystem clock: f_{SUB} = 32.768 kHz)		

Note This is about 4.5 KB when the self-programming function and data flash function are used (For details, see **CHAPTER 3**).

(2/2)

Item		24-pin	32-pin	36-pin	48-pin	64-pin
		R5F11B7x (x = C, E)	R5F11BBx (x = C, E)	R5F11BCx (x = C, E)	R5F11BGx (x = C, E)	R5F11BLx (x = C, E)
Clock output/buzzer output		2	2	2	2	2
		• 2.44 kHz, 4.88 kHz, 9.76 kHz, 1.25 MHz, 2.5 MHz, 5 MHz, 10 MHz (Main system clock: f_{MAIN} = 20 MHz operation)				
8/10-bit resolution A/D converter		8 channels	13 channels	15 channels	17 channels	17 channels
8-bit D/A converter		1 channel	2 channels			
Comparator		2 channels				
Programmable gain amplifier (PGA)		1 channel				
Serial interface		[24-pin, 32-pin, 36-pin products] • Simplified SPI (CSI): 1 channel/UART (UART supporting LIN-bus): 1 channel/simplified I²C: 1 channel • Simplified SPI (CSI): 1 channel/UART: 1 channel/simplified I²C: 1 channel • Simplified SPI (CSI): 1 channel/UART: 1 channel/simplified I²C: 1 channel [48-pin products] • Simplified SPI (CSI): 2 channels/UART (UART supporting LIN-bus): 1 channel/simplified I²C:2 channels • Simplified SPI (CSI): 1 channel/UART: 1 channel/simplified I²C: 1 channel • Simplified SPI (CSI): 2 channels/UART: 1 channel/simplified I²C: 2 channels [64-pin products] • Simplified SPI (CSI): 2 channels/UART (UART supporting LIN-bus): 1 channel/simplified I²C: 2 channels • Simplified SPI (CSI): 2 channels/UART: 1 channel/simplified I²C: 2 channels • Simplified SPI (CSI): 2 channels/UART: 1 channel/simplified I²C: 2 channels				
	I²C bus	1 channel	1 channel	1 channel	1 channel	1 channel
Data transfer controller (DTC)		30 sources	32 sources	31 sources	32 sources	33 sources
Event link controller (ELC)	Event input	21	21	21	22	22
	Event trigger output	9	10	10	10	10
Vectored interrupt sources	Internal	25	25	25	25	25
	External	9	11	10	12	13
Key interrupt		—	—	—	6	8
Reset		• Reset by $\overline{\text{RESET}}$ pin • Internal reset by watchdog timer • Internal reset by power-on-reset • Internal reset by voltage detector • Internal reset by illegal instruction execution Note • Internal reset by RAM parity error • Internal reset by illegal-memory access				
Power-on-reset circuit		• Power-on-reset: 1.51 ±0.04 V (T_A = –40 to +85°C) 1.51 ±0.06 V (T_A = –40 to +105°C) • Power-down-reset: 1.50 ±0.04 V (T_A = –40 to +85°C) 1.50 ±0.06 V (T_A = –40 to +105°C)				
Voltage detector		[T_A = –40 to +85°C] • Rising edge: 1.67 ±0.03 V to 4.00 ±0.08 V (14 stages) • Falling edge: 1.63 ±0.03 V to 3.98 ±0.08 V (14 stages) [T_A = –40 to +105°C (G: Industrial applications)] • Rising edge: 2.61 ±0.1 V to 4.06 ±0.16 V (8 stages) • Falling edge: 2.55 ±0.1 V to 3.98 ±0.15 V (8 stages)				
On-chip debug function		Provided				
Power supply voltage		V_{DD} = 1.6 to 5.5 V (T_A = –40 to +85°C) V_{DD} = 2.4 to 5.5 V (T_A = –40 to +105°C)				
Operating ambient temperature		T_A = –40 to +85°C (A: Consumer applications), T_A = –40 to +105°C (Industrial applications),				

Note The illegal instruction is generated when instruction code FFH is executed.
Reset by the illegal instruction execution not is issued by emulation with the in-circuit emulator or on-chip debug emulator.

CHAPTER 2 PIN FUNCTIONS

2.1 Port Functions

Pin I/O buffer power supplies depend on the product. The relationship between these power supplies and the pins is shown below.

Table 2 - 1 Pin I/O Buffer Power Supplies

(1) 24-pin, 32-pin, 48-pin products

Power Supply	Corresponding Pins
V_{DD}	All pins

(2) 36-pin products

Power Supply	Corresponding Pins
EV_{DD0}	Port pins other than P20 to P25, P121 to P124, and P137
V_{DD}	• P20 to P25, P121 to P124, and P137 • $\overline{RESET}$ and REGC

(3) 64-pin products

Power Supply	Corresponding Pins
EV_{DD0}	Port pins other than P20 to P27, P121 to P124, and P137
V_{DD}	• P20 to P27, P121 to P124, and P137 • $\overline{RESET}$ and REGC

Set in each port I/O, buffer, pull-up resistor is also valid for alternate functions.

2.1.1 24-pin products

(1/2)

Function Name	Pin Type	I/O	After Reset Release	Alternate Function	Function
P00	8-9-2	I/O	Analog function	ANI17/TI00/TxD1/TRGCLKA/(TRJO0)/(IrTxD)/INTP8/SDAA0/IVCMP10	Port 0. 2-bit I/O port. Input/output can be specified in 1-bit units. Use of an on-chip pull-up resistor can be specified by a software setting at input port. Input of P00 and P01 can be set to TTL input buffer. Output of P00 and P01 can be set to N-ch open-drain output (V_{DD} tolerance). P00 and P01 can be set to analog input[Note].
P01				ANI16/TO00/RxD1/TRGCLKB/TRJIO0/(IrRxD)/INTP10/SCLA0/IVCMP11	
P10	8-3-8	I/O	Analog function	ANI20/SCK11/SCL11/TRDIOD1/(TxD2)	Port 1. 6-bit I/O port. Input/output can be specified in 1-bit units. Use of an on-chip pull-up resistor can be specified by a software setting at input port. Input of P10, P14, and P15 can be set to TTL input buffer. Output of P10, P11, and P13 to P15 can be set to N-ch open-drain output (V_{DD} tolerance). P10 and P11 can be set to analog input[Note].
P11	7-3-8			ANI21/SI11/SDA11/TRDIOC1	
P12	7-1-7		Input port	SO11/TRDIOB1/INTP5/VCOUT0	
P13	7-1-8			TxD2/SO20/TRDIOA1/(TRDIOC0)/IrTxD/TI03/TO03	
P14	8-1-8			RxD2/SI20/SDA20/TRDIOD0/(SCLA0)/IrRxD	
P15				PCLBUZ1/SCK20/SCL20/TRDIOB0/(SDAA0)	
P20	4-9-1	I/O	Analog function	ANI0/AV_{REFP}/IVCMP12/INTP11	Port 2. 3-bit I/O port. Input/output can be specified in 1-bit units. Can be set to analog input[Note].
P21				ANI1/AV_{REFM}/IVCMP13	
P22	4-16-1			ANI2/ANO0/PGAI/IVCMP0	
P40	7-1-3	I/O	Input port	TOOL0	Port 4. 1-bit I/O port. Input/output can be specified. Use of an on-chip pull-up resistor can be specified by a software setting at input port.
P50	8-1-4	I/O	Input port	INTP1/SI00/RxD0/TOOLRxD/SDA00/TRGIOA/(TRJO0)/(TRDIOC1)	Port 5. 2-bit I/O port. Input/output can be specified in 1-bit units. Use of an on-chip pull-up resistor can be specified by a software setting at input port. Input of P50 can be set to TTL input buffer. Output of P50 and P51 can be set to N-ch open-drain output (V_{DD} tolerance).
P51	7-1-4			INTP2/SO00/TxD0/TOOLTxD/TRGIOB/(TRDIOD1)	

Note Each pin can be specified as either digital or analog by setting port mode control register x (PMCx) (Can be specified in 1-bit units).

Remark Functions in parentheses in the above figure can be assigned via settings in the peripheral I/O redirection registers 0 to 3 (PIOR0 to PIOR3).

(2/2)

Function Name	Pin Type	I/O	After Reset Release	Alternate Function	Function
P72	8-1-4	I/O	Input port	PCLBUZ0/INTP4/SCK00/SCL00/ TRJO0/(TxD1)/(VCOUT1)	Port 7. 2-bit I/O port. Input/output can be specified in 1-bit units. Input of P72 can be set to TTL input buffer. Output of P72 can be set to N-ch open-drain output (V_{DD} tolerance).
P73	7-1-3			INTP3/$\overline{\text{SSI00}}$/(TRJIO0)/(RxD1)/ (VCOUT0)	
P121	2-2-1	Input	Input port	X1	Port 12. 2-bit input-only port.
P122				X2/EXCLK	
P137	2-1-2	Input	Input port	INTP0	Port 13. 1-bit input-only port.
P147	7-9-1	I/O	Analog function	ANI18/VCOUT1/IVREF0	Port 14. 1-bit I/O port. Input/output can be specified. Use of an on-chip pull-up resistor can be specified by a software setting at input port. P147 can be set to analog input[Note].
$\overline{\text{RESET}}$	2-1-1	Input	—	—	Input-only pin for external reset. Connect to V_{DD} directly or via a resistor when external reset is not used.

Note Each pin can be specified as either digital or analog by setting port mode control register x (PMCx) (Can be specified in 1-bit units).

Remark Functions in parentheses in the above figure can be assigned via settings in the peripheral I/O redirection registers 0 to 3 (PIOR0 to PIOR3).

2.1.2 32-pin products

(1/2)

Function Name	Pin Type	I/O	After Reset Release	Alternate Function	Function
P00	7-9-2	I/O	Analog function	ANI17/TI00/TxD1/TRGCLKA/(TRJO0)/INTP8/IVCMP10	Port 0. 2-bit I/O port. Input/output can be specified in 1-bit units. Use of an on-chip pull-up resistor can be specified by a software setting at input port. Input of P01 can be set to TTL input buffer. Output of P00 can be set to N-ch open-drain output (V_{DD} tolerance). P00 and P01 can be set to analog input[Note].
P01	8-9-1			ANI16/TO00/RxD1/TRGCLKB/TRJIO0/INTP10/IVCMP11	
P10	8-3-8	I/O	Analog function	ANI20/SCK11/SCL11/TRDIOD1/(TxD2)	Port 1. 8-bit I/O port. Input/output can be specified in 1-bit units. Use of an on-chip pull-up resistor can be specified by a software setting at input port. Input of P10 and P14 to P17 can be set to TTL input buffer. Output of P10, P11, P13 to P15, and P17 can be set to N-ch open-drain output (V_{DD} tolerance). P10 to P14 can be set to analog input[Note].
P11	7-3-8			ANI21/SI11/SDA11/TRDIOC1	
P12	7-3-7			ANI22/SO11/TRDIOB1	
P13	7-3-8			ANI23/TxD2/SO20/TRDIOA1/IrTxD	
P14	8-3-8			ANI24/RxD2/SI20/SDA20/TRDIOD0/(SCLA0)/IrRxD	
P15	8-1-8		Input port	PCLBUZ1/SCK20/SCL20/TRDIOB0/(SDAA0)	
P16	8-1-7			TI01/TO01/INTP5/TRDIOC0/(RxD0)/(TRDIOA1)	
P17	8-1-8			TI02/TO02/TRDIOA0/TRDCLK/(TxD0)/(TRDIOD0)	
P20	4-9-1	I/O	Analog function	ANI0/AV_{REFP}/IVCMP12/INTP11	Port 2. 4-bit I/O port. Input/output can be specified in 1-bit units. Can be set to analog input[Note]
P21				ANI1/AV_{REFM}/IVCMP13	
P22	4-16-1			ANI2/ANO0/PGAI/IVCMP0	
P23	4-15-1			ANI3/ANO1/PGAGND	
P30	8-1-4	I/O	Input port	INTP3/SCK00/SCL00/TRJO0/(TRDIOB1)	Port 3. 2-bit I/O port. Input/output can be specified in 1-bit units. Use of an on-chip pull-up resistor can be specified by a software setting at input port. Input of P30 and P31 can be set to TTL input buffer. Output of P30 and P31 can be set to N-ch open-drain output (V_{DD} tolerance).
P31				TI03/TO03/INTP4/PCLBUZ0/$\overline{SSI00}$/(TRJIO0)/VCOUT1/SCLA0	
P40	7-1-3	I/O	Input port	TOOL0	Port 4. 1-bit I/O port. Input/output can be specified. Use of an on-chip pull-up resistor can be specified by a software setting at input port.

Note Each pin can be specified as either digital or analog by setting port mode control register x (PMCx) (Can be specified in 1-bit units).

Remark Functions in parentheses in the above figure can be assigned via settings in the peripheral I/O redirection registers 0 to 2 (PIOR0 to PIOR2).

(2/2)

Function Name	Pin Type	I/O	After Reset Release	Alternate Function	Function
P50	8-1-4	I/O	Input port	INTP1/SI00/RxD0/TOOLRxD/SDA00/TRGIOA/(TRJO0)/(TRDIOC1)	Port 5. 2-bit I/O port. Input/output can be specified in 1-bit units. Use of an on-chip pull-up resistor can be specified by a software setting at input port. Input of P50 can be set to TTL input buffer. Output of P50 and P51 can be set to N-ch open-drain output (V_{DD} tolerance).
P51	7-1-4			INTP2/SO00/TxD0/TOOLTxD/TRGIOB/(TRDIOD1)	
P70	7-1-3	I/O	Input port	INTP6/(VCOUT1)	Port 7. 1-bit I/O port. Input/output can be specified. Use of an on-chip pull-up resistor can be specified by a software setting at input port. Input of P74 can be set to TTL input buffer. Output of P74 can be set to N-ch open-drain output (V_{DD} tolerance).
P72		I/O	Input port	INTP7/(TxD1)	
P73		I/O	Input port	(RxD1)/(VCOUT0)	
P74	8-1-4	I/O	Input port	SDAA0	
P120	7-3-3	I/O	Analog function	ANI19/VCOUT0	Port 12. 1-bit I/O port and 2-bit input-only port. For only P120, input/output can be specified. For only P120, use of an on-chip pull-up resistor can be specified by a software setting at input port. P120 can be set to analog input[Note].
P121	2-2-1	Input	Input port	X1	
P122				X2/EXCLK	
P137	2-1-2	Input	Input port	INTP0	Port 13. 1-bit input-only port.
P147	7-9-1	I/O	Analog function	ANI18/IVREF0	Port 14. 1-bit I/O port. Input/output can be specified. Use of an on-chip pull-up resistor can be specified by a software setting at input port. P147 can be set to analog input[Note].
$\overline{\text{RESET}}$	2-1-1	Input	—	—	Input-only pin for external reset. Connect to V_{DD} directly or via a resistor when external reset is not used.

Note Each pin can be specified as either digital or analog by setting port mode control register x (PMCx) (Can be specified in 1-bit units).

Remark Functions in parentheses in the above figure can be assigned via settings in the peripheral I/O redirection registers 0 to 2 (PIOR to PIOR2).

2.1.3 36-pin products

(1/2)

Function Name	Pin Type	I/O	After Reset Release	Alternate Function	Function
P00	7-9-2	I/O	Analog function	ANI17/TI00/TxD1/TRGCLKA/(TRJO0)/ INTP8/IVCMP10	Port 0. 2-bit I/O port. Input/output can be specified in 1-bit units. Use of an on-chip pull-up resistor can be specified by a software setting at input port. Input of P01 can be set to TTL input buffer. Output of P00 can be set to N-ch open-drain output (EV_{DD} tolerance). P00 to P01 can be set to analog input[Note].
P01	8-9-1			ANI16/TO00/RxD1/TRGCLKB/TRJIO0/ /INTP10/IVCMP11	
P10	8-3-8	I/O	Analog function	ANI20/SCK11/SCL11/TRDIOD1/ (TxD2)	Port 1. 8-bit I/O port. Input/output can be specified in 1-bit units. Use of an on-chip pull-up resistor can be specified by a software setting at input port. Input of P10 and P14 to P17 can be set to TTL input buffer. Output of P10, P11, P13 to P15, and P17 can be set to N-ch open-drain output (EV_{DD} tolerance). P10 to P14 can be set to analog input[Note].
P11	7-3-8			ANI21/SI11/SDA11/TRDIOC1	
P12	7-3-7			ANI22/SO11/TRDIOB1	
P13	7-3-8			ANI23/TxD2/SO20/TRDIOA1/IrTxD	
P14	8-3-8			ANI24/RxD2/SI20/SDA20/TRDIOD0/ (SCLA0)/IrRxD	
P15	8-1-8		Input port	PCLBUZ1/SCK20/SCL20/TRDIOB0/ (SDAA0)	
P16	8-1-7			TI01/TO01/INTP5/TRDIOC0/(RxD0)/ (TRDIOA1)	
P17	8-1-8			TI02/TO02/TRDIOA0/TRDCLK/(TxD0)/ (TRDIOD0)	
P20	4-9-1	I/O	Analog function	ANI0/AV_{REFP}/IVCMP12/INTP11	Port 2. 6-bit I/O port. Input/output can be specified in 1-bit units. Can be set to analog input [Note].
P21				ANI1/AV_{REFM}/IVCMP13	
P22	4-16-1			ANI2/ANO0/PGAI/IVCMP0	
P23	4-15-1			ANI3/ANO1/PGAGND	
P24	4-3-3			ANI4	
P25				ANI5	
P30	8-1-4	I/O	Input port	INTP3/RTC1HZ/SCK00/SCL00/ TRJO0/(TRDIOB1)	Port 3. 2-bit I/O port. Input/output can be specified in 1-bit units. Use of an on-chip pull-up resistor can be specified by a software setting at input port. Input of P30 can be set to TTL input buffer. Output of P30 can be set to N-ch open-drain output (EV_{DD} tolerance).
P31	7-1-3			TI03/TO03/INTP4/PCLBUZ0/$\overline{SSI00}$/ (TRJIO0)/VCOUT1	
P40	7-1-3	I/O	Input port	TOOL0	Port 4. 1-bit I/O port. Input/output can be specified. Use of an on-chip pull-up resistor can be specified by a software setting at input port.

Note Each pin can be specified as either digital or analog by setting port mode control register x (PMCx) (Can be specified in 1-bit units).

Remark Functions in parentheses in the above figure can be assigned via settings in the peripheral I/O redirection registers 0 to 2 (PIOR0 to PIOR2).

(2/2)

Function Name	Pin Type	I/O	After Reset Release	Alternate Function	Function
P50	8-1-4	I/O	Input port	INTP1/SI00/RxD0/TOOLRxD/SDA00/TRGIOA/(TRJO0)/(TRDIOC1)	Port 5. 2-bit I/O port. Input/output can be specified in 1-bit units. Use of an on-chip pull-up resistor can be specified by a software setting at input port. Input of P50 can be set to TTL input buffer. Output of P50 and P51 can be set to N-ch open-drain output (EV_{DD} tolerance).
P51	7-1-4			INTP2/SO00/TxD0/TOOLTxD/TRGIOB/(TRDIOD1)	
P60	12-1-2	I/O	Input port	SCLA0	Port 6. 2-bit I/O port. Input/output can be specified in 1-bit units. Output of P60 and P61 is N-ch open-drain output (6 V tolerance).
P61				SDAA0	
P70	7-1-3	I/O	Input port	INTP6/(VCOUT0)/(VCOUT1)	Port 7. 1-bit I/O port. Input/output can be specified in 1-bit units. Use of an on-chip pull-up resistor can be specified by a software setting at input port.
P120	7-3-3	I/O	Analog function	ANI19/VCOUT0	Port 12. 1-bit I/O port and 4-bit input-only port. For only P120, input/output can be specified. For only P120, use of an on-chip pull-up resistor can be specified by a software setting at input port. P120 can be set to analog input[Note].
P121	2-2-1	Input	Input port	X1	
P122				X2/EXCLK	
P123				XT1	
P124				XT2/EXCLKS	
P137	2-1-2	Input	Input port	INTP0	Port 13. 1-bit input-only port.
P147	7-9-1	I/O	Analog function	ANI18/IVREF0	Port 14. 1-bit I/O port. Use of an on-chip pull-up resistor can be specified by a software setting at input port. P147 can be set to analog input[Note].
$\overline{\text{RESET}}$	2-1-1	Input	—	—	Input-only pin for external reset. Connect to V_{DD} directly or via a resistor when external reset is not used.

Note Each pin can be specified as either digital or analog by setting port mode control register x (PMCx) (Can be specified in 1-bit units).

Remark Functions in parentheses in the above figure can be assigned via settings in the peripheral I/O redirection registers 0 to 2 (PIOR0 to PIOR2).

2.1.4 48-pin products

(1/2)

Function Name	Pin Type	I/O	After Reset Release	Alternate Function	Function
P00	7-9-2	I/O	Analog function	ANI17/TI00/TxD1/TRGCLKA/(TRJO0)/INTP8/IVCMP10	Port 0. 2-bit I/O port. Input/output can be specified in 1-bit units. Use of an on-chip pull-up resistor can be specified by a software setting at input port. Input of P01 can be set to TTL input buffer. Output of P00 can be set to N-ch open-drain output (V_{DD} tolerance). P00 and P01 can be set to analog input[Note].
P01	8-9-1			ANI16/TO00/RxD1/TRGCLKB/TRJIO0/INTP10/IVCMP11	
P10	8-3-8	I/O	Analog function	ANI20/SCK11/SCL11/TRDIOD1/(TxD2)	Port 1. 8-bit I/O port. Input/output can be specified in 1-bit units. Use of an on-chip pull-up resistor can be specified by a software setting at input port. Input of P10 and P14 to P17 can be set to TTL input buffer. Output of P10, P11, P13 to P15, and P17 can be set to N-ch open-drain output (V_{DD} tolerance). P10 to P14 can be set to analog input[Note].
P11	7-3-8			ANI21/SI11/SDA11/TRDIOC1	
P12	7-3-7			ANI22/SO11/TRDIOB1	
P13	7-3-8			ANI23/TxD2/SO20/TRDIOA1/IrTxD	
P14	8-3-8			ANI24/RxD2/SI20/SDA20/TRDIOD0/(SCLA0)/IrRxD	
P15	8-1-8		Input port	PCLBUZ1/SCK20/SCL20/TRDIOB0/(SDAA0)	
P16	8-1-7			TI01/TO01/INTP5/TRDIOC0/(RxD0)/(TRDIOA1)	
P17	8-1-8			TI02/TO02/TRDIOA0/TRDCLK/(TxD0)/(TRDIOD0)	
P20	4-9-1	I/O	Analog function	ANI0/AV_{REFP}/IVCMP12/INTP11	Port 2. 8-bit I/O port. Input/output can be specified in 1-bit units. Can be set to analog input[Note].
P21				ANI1/AV_{REFM}/IVCMP13	
P22	4-16-1			ANI2/ANO0/PGAI/IVCMP0	
P23	4-15-1			ANI3/ANO1/PGAGND	
P24	4-3-3			ANI4	
P25				ANI5	
P26				ANI6	
P27				ANI7	
P30	8-1-4	I/O	Input port	INTP3/RTC1HZ/SCK00/SCL00/TRJO0/(TRDIOB1)	Port 3. 2-bit I/O port. Input/output can be specified in 1-bit units. Use of an on-chip pull-up resistor can be specified by a software setting at input port. Input of P30 can be set to TTL input buffer. Output of P30 can be set to N-ch open-drain output (V_{DD} tolerance).
P31	7-1-3			TI03/TO03/INTP4/(TRJIO0)/(PCLBUZ0)/VCOUT1	

Note Each pin can be specified as either digital or analog by setting port mode control register x (PMCx) (Can be specified in 1-bit units).

Remark Functions in parentheses in the above figure can be assigned via settings in the peripheral I/O redirection registers 0 to 2 (PIOR0 to PIOR2).

(2/2)

Function Name	Pin Type	I/O	After Reset Release	Alternate Function	Function
P40	7-1-3	I/O	Input port	TOOL0	Port 4. 2-bit I/O port. Input/output can be specified in 1-bit units. Use of an on-chip pull-up resistor can be specified by a software setting at input port.
P41				(TRJIO0)	
P50	8-1-4	I/O	Input port	INTP1/SI00/RxD0/TOOLRxD/SDA00/TRGIOA/(TRJO0)/(TRDIOC1)	Port 5. 2-bit I/O port. Input/output can be specified in 1-bit units. Use of an on-chip pull-up resistor can be specified by a software setting at input port. Input of P50 can be set to TTL input buffer. Output of P50 and P51 can be set to N-ch open-drain output (V_{DD} tolerance).
P51	7-1-4			INTP2/SO00/TxD0/TOOLTxD/TRGIOB/(TRDIOD1)	
P60	12-1-2	I/O	Input port	SCLA0	Port 6. 4-bit I/O port. Input/output can be specified in 1-bit units. Output of P60 to P63 is N-ch open-drain output (6 V tolerance).
P61				SDAA0	
P62				$\overline{\text{SSI00}}$	
P63				—	
P70	7-1-3	I/O	Input port	KR0/SCK21/SCL21/(VCOUT1)	Port 7. 6-bit I/O port. Input/output can be specified in 1-bit units. Use of an on-chip pull-up resistor can be specified by a software setting at input port. Output of P71 and P74 can be set to N-ch open-drain output (V_{DD} tolerance).
P71	7-1-4			KR1/SI21/SDA21/(VCOUT0)	
P72	7-1-3			KR2/SO21/(TxD1)	
P73				KR3/SO01/(RxD1)	
P74	7-1-4			KR4/SI01/SDA01	
P75	7-1-3			KR5/INTP9/SCK01/SCL01	
P120	7-3-3	I/O	Analog function	ANI19/VCOUT0	Port 12. 1-bit I/O port and 4-bit input-only port. For only P120, input/output can be specified. For only P120, use of an on-chip pull-up resistor can be specified by a software setting at input port. P120 can be set to analog input[Note].
P121	2-2-1	Input	Input port	X1	
P122				X2/EXCLK	
P123				XT1	
P124				XT2/EXCLKS	
P130	1-1-1	Output	Output port	—	Port 13. 1-bit output-only port and 1-bit input-only port.
P137	2-1-2	Input	Input port	INTP0	
P140	7-1-3	I/O	Input port	PCLBUZ0/INTP6	Port 14. 3-bit I/O port. Input/output can be specified in 1-bit units. Use of an on-chip pull-up resistor can be specified by a software setting at input port. P147 can be set to analog input[Note].
P146				—	
P147	7-9-1		Analog function	ANI18/IVREF0	
$\overline{\text{RESET}}$	2-1-1	Input	—	—	Input-only pin for external reset. Connect to V_{DD} directly or via a resistor when external reset is not used.

Note Each pin can be specified as either digital or analog by setting port mode control register x (PMCx) (Can be specified in 1-bit units).

Remark Functions in parentheses in the above figure can be assigned via settings in the peripheral I/O redirection registers 0 to 2 (PIOR0 to PIOR2).

2.1.5 64-pin products

(1/2)

Function Name	Pin Type	I/O	After Reset Release	Alternate Function	Function
P00	7-1-4	I/O	Input port	TI00/TRGCLKA/(TRJO0)/(INTP8)	Port 0. 7-bit I/O port. Input/output can be specified in 1-bit units. Use of an on-chip pull-up resistor can be specified by a software setting at input port. Input of P01, P03 and P04 can be set to TTL input buffer. Output of P00 and P02 to P04 can be set to N-ch open-drain output (EV_{DD} tolerance). P02 and P03 can be set to analog input[Note].
P01	8-1-3			TO00/TRGCLKB/TRJIO0/(INTP10)	
P02	7-9-2		Analog function	ANI17/SO10/TxD1/IVCMP10	
P03	8-9-2			ANI16/SI10/RxD1/SDA10/IVCMP11	
P04	8-1-4		Input port	SCK10/SCL10	
P05	7-1-3			(INTP10)	
P06				(INTP11)/(TRJIO0)	
P10	8-3-8	I/O	Analog function	ANI20/SCK11/SCL11/TRDIOD1	Port 1. 8-bit I/O port. Input/output can be specified in 1-bit units. Use of an on-chip pull-up resistor can be specified by a software setting at input port. Input of P10, P14 to P17 can be set to TTL input buffer. Output of P10, P11, P13 to P15, and P17 can be set to N-ch open-drain output (EV_{DD} tolerance). P10 to P14 can be set to analog input[Note].
P11	7-3-8			ANI21/SI11/SDA11/TRDIOC1	
P12	7-3-7			ANI22/SO11/TRDIOB1/(INTP5)	
P13	7-3-8			ANI23/TxD2/SO20/TRDIOA1/IrTxD	
P14	8-3-8			ANI24/RxD2/SI20/SDA20/TRDIOD0/(SCLA0)/IrRxD	
P15	8-1-8		Input port	SCK20/SCL20/TRDIOB0/(SDAA0)	
P16	8-1-7			TI01/TO01/INTP5/TRDIOC0/(SI00/RxD0)/(TRDIOA1)	
P17	8-1-8			TI02/TO02/TRDIOA0/TRDCLK/(SO00/TxD0)/(TRDIOD0)	
P20	4-9-1	I/O	Analog function	ANI0/AV_{REFP}/IVCMP12/(INTP11)	Port 2. 8-bit I/O port. Input/output can be specified in 1-bit units. Can be set to analog input[Note].
P21				ANI1/AV_{REFM}/IVCMP13	
P22	4-16-1			ANI2/ANO0/PGAI/IVCMP0	
P23	4-15-1			ANI3/ANO1/PGAGND	
P24	4-3-3			ANI4	
P25				ANI5	
P26				ANI6	
P27				ANI7	
P30	8-1-4	I/O	Input port	INTP3/RTC1HZ/SCK00/SCL00/TRJO0/(TRDIOB1)	Port 3. 2-bit I/O port. Input/output can be specified in 1-bit units. Use of an on-chip pull-up resistor can be specified by a software setting at input port. Input of P30 can be set to TTL input buffer. Output of P30 can be set to N-ch open-drain output (EV_{DD} tolerance).
P31	7-1-3			TI03/TO03/INTP4/(TRJIO0)/(PCLBUZ0)/VCOUT1	

Note Each pin can be specified as either digital or analog by setting port mode control register x (PMCx) (Can be specified in 1-bit units).

Remark Functions in parentheses in the above figure can be assigned via settings in the peripheral I/O redirection registers 0 to 2 (PIOR0 to PIOR2).

(2/2)

Function Name	Pin Type	I/O	After Reset Release	Alternate Function	Function
P40	7-1-3	I/O	Input port	TOOL0	Port 4. 4-bit I/O port. Input/output can be specified in 1-bit units. Use of an on-chip pull-up resistor can be specified by a software setting at input port.
P41				(TRJIO0)	
P42				(INTP8)	
P43				(INTP9)	
P50	8-1-4	I/O	Input port	INTP1/SI00/RxD0/TOOLRxD/SDA00/TRGIOA/(TRJO0)/(TRDIOC1)	Port 5. 6-bit I/O port. Input/output can be specified in 1-bit units. Use of an on-chip pull-up resistor can be specified by a software setting at input port. Input of P50 and P55 can be set to TTL input buffer. Output of P50, P51, and P55 can be set to N-ch open-drain output (EV_{DD} tolerance).
P51	7-1-4			INTP2/SO00/TxD0/TOOLTxD/TRGIOB/(TRDIOD1)	
P52	7-1-3			(INTP1)	
P53				(INTP2)	
P54				(INTP3)	
P55	8-1-4			(INTP4)/(PCLBUZ1)/(SCK00)	
P60	12-1-2	I/O	Input port	SCLA0	Port 6. 4-bit I/O port. Input/output can be specified in 1-bit units. Output of P60 to P63 is N-ch open-drain output (6 V tolerance).
P61				SDAA0	
P62				$\overline{\text{SSI00}}$	
P63				—	
P70	7-1-3	I/O	Input port	KR0/SCK21/SCL21/(VCOUT1)	Port 7. 8-bit I/O port. Input/output can be specified in 1-bit units. Use of an on-chip pull-up resistor can be specified by a software setting at input port. Output of P71 and P74 can be set to N-ch open-drain output (EV_{DD} tolerance).
P71	7-1-4			KR1/SI21/SDA21/(VCOUT0)	
P72	7-1-3			KR2/SO21	
P73				KR3/SO01	
P74	7-1-4			KR4/INTP8/SI01/SDA01	
P75	7-1-3			KR5/INTP9/SCK01/SCL01	
P76				KR6/INTP10/(RxD2)	
P77				KR7/INTP11/(TxD2)	
P120	7-3-3	I/O	Analog function	ANI19/VCOUT0	Port 12. 1-bit I/O port and 4-bit input-only port. P120 can be set to analog input. For only P120, input/output can be specified. For only P120, use of an on-chip pull-up resistor can be specified by a software setting at input port. P120 can be set to analog input[Note].
P121	2-2-1	Input	Input port	X1	
P122				X2/EXCLK	
P123				XT1	
P124				XT2/EXCLKS	
P130	1-1-1	Output	Output port	—	Port 13. 1-bit output-only port and 1-bit input-only port.
P137	2-1-2	Input	Input port	INTP0	
P140	7-1-3	I/O	Input port	PCLBUZ0/INTP6	Port 14. 4-bit I/O port. Input/output can be specified in 1-bit units. Use of an on-chip pull-up resistor can be specified by a software setting at input port. P147 can be set to analog input[Note].
P141				PCLBUZ1/INTP7	
P146				—	
P147	7-3-3		Analog function	ANI18/IVREF0	
$\overline{\text{RESET}}$	2-1-1	Input	—	—	Input-only pin for external reset. Connect to V_{DD} directly or via a resistor when external reset is not used.

Note Each pin can be specified as either digital or analog by setting port mode control register x (PMCx) (Can be specified in 1-bit units).

Remark Functions in parentheses in the above figure can be assigned via settings in the peripheral I/O redirection registers 0 to 2 (PIOR0 to PIOR2).

2.2 Functions other than port pins

2.2.1 Functions for each product

(1/4)

Function Name	64-pin	48-pin	36-pin	32-pin	24-pin
ANI0	√	√	√	√	√
ANI1	√	√	√	√	√
ANI2	√	√	√	√	√
ANI3	√	√	√	√	—
ANI4	√	√	√	—	—
ANI5	√	√	√	—	—
ANI6	√	√	—	—	—
ANI7	√	√	—	—	—
ANI16	√	√	√	√	√
ANI17	√	√	√	√	√
ANI18	√	√	√	√	√
ANI19	√	√	√	√	—
ANI20	√	√	√	√	√
ANI21	√	√	√	√	√
ANI22	√	√	√	√	—
ANI23	√	√	√	√	—
ANI24	√	√	√	√	—
ANO0	√	√	√	√	√
ANO1	√	√	√	√	—
INTP0	√	√	√	√	√
INTP1	√	√	√	√	√
INTP2	√	√	√	√	√
INTP3	√	√	√	√	√
INTP4	√	√	√	√	√
INTP5	√	√	√	√	√
INTP6	√	√	√	√	—
INTP7	√	—	—	√	—
INTP8	√	√	√	√	√
INTP9	√	√	—	—	—
INTP10	√	√	√	√	√
INTP11	√	√	√	√	√
IrRxD	√	√	√	√	√
IrTxD	√	√	√	√	√
IVCMP0	√	√	√	√	√
IVREF0	√	√	√	√	√
IVCMP10	√	√	√	√	√
IVCMP11	√	√	√	√	√
IVCMP12	√	√	√	√	√
IVCMP13	√	√	√	√	√

(2/4)

Function Name	64-pin	48-pin	36-pin	32-pin	24-pin
KR0	√	√	—	—	—
KR1	√	√	—	—	—
KR2	√	√	—	—	—
KR3	√	√	—	—	—
KR4	√	√	—	—	—
KR5	√	√	—	—	—
KR6	√	—	—	—	—
KR7	√	—	—	—	—
PCLBUZ0	√	√	√	√	√
PCLBUZ1	√	√	√	√	√
PGAI	√	√	√	√	√
PGAGND	√	√	√	√	—
REGC	√	√	√	√	√
RTC1HZ	√	√	√	—	—
$\overline{\text{RESET}}$	√	√	√	√	√
RxD0	√	√	√	√	√
RxD1	√	√	√	√	√
RxD2	√	√	√	√	√
SCK00	√	√	√	√	√
SCK01	√	√	—	—	—
SCK10	√	—	—	—	—
SCK11	√	√	√	√	√
SCK20	√	√	√	√	√
SCK21	√	√	—	—	—
SCLA0	√	√	√	√	√
SCL00	√	√	√	√	√
SCL01	√	√	—	—	—
SCL10	√	—	—	—	—
SCL11	√	√	√	√	√
SCL20	√	√	√	√	√
SCL21	√	√	—	—	—
SDAA0	√	√	√	√	√
SDA00	√	√	√	√	√
SDA01	√	√	—	—	—
SDA10	√	—	—	—	—
SDA11	√	√	√	√	√
SDA20	√	√	√	√	√
SDA21	√	√	—	—	—
SI00	√	√	√	√	√
SI01	√	√	—	—	—
SI10	√	—	—	—	—
SI11	√	√	√	√	√

(3/4)

Function Name	64-pin	48-pin	36-pin	32-pin	24-pin
SI20	√	√	√	√	√
SI21	√	√	—	—	—
SO00	√	√	√	√	√
SO01	√	√	—	—	—
SO10	√	—	—	—	—
SO11	√	√	√	√	√
SO20	√	√	√	√	√
SO21	√	√	—	—	—
$\overline{\text{SSI00}}$	√	√	√	√	√
TI00	√	√	√	√	√
TI01	√	√	√	√	—
TI02	√	√	√	√	—
TI03	√	√	√	√	√
TO00	√	√	√	√	√
TO01	√	√	√	√	—
TO02	√	√	√	√	—
TO03	√	√	√	√	√
TRJIO0	√	√	√	√	√
TRJO0	√	√	√	√	√
TRDCLK	√	√	√	√	—
TRDIOA0	√	√	√	√	—
TRDIOB0	√	√	√	√	√
TRDIOC0	√	√	√	√	√
TRDIOD0	√	√	√	√	√
TRDIOA1	√	√	√	√	√
TRDIOB1	√	√	√	√	√
TRDIOC1	√	√	√	√	√
TRDIOD1	√	√	√	√	√
TRGIOA	√	√	√	√	√
TRGIOB	√	√	√	√	√
TRGCLKA	√	√	√	√	√
TRGCLKB	√	√	√	√	√
TxD0	√	√	√	√	√
TxD1	√	√	√	√	√
TxD2	√	√	√	√	√
VCOUT0	√	√	√	√	√
VCOUT1	√	√	√	√	√

(4/4)

Function Name	64-pin	48-pin	36-pin	32-pin	24-pin
X1	√	√	√	√	√
X2	√	√	√	√	√
EXCLK	√	√	√	√	√
EXCLKS	√	√	√	—	—
XT1	√	√	√	—	—
XT2	√	√	√	—	—
V_{DD}	√	√	√	√	√
EV_{DD0}	√	—	√	—	—
AV_{REFP}	√	√	√	√	√
AV_{REFM}	√	√	√	√	√
V_{SS}	√	√	√	√	√
EV_{SS0}	√	—	—	—	—
TOOLRxD	√	√	√	√	√
TOOLTxD	√	√	√	√	√
TOOL0	√	√	√	√	√

2.2.2 Pins for each product (pins other than port pins)

(1/2)

Function Name	I/O	Function
ANI0 to ANI17, ANI16 to ANI24	Input	A/D converter analog input (see **Figure 15 - 46 Analog Input Pin Connection**)
ANO0, ANO1	Output	D/A converter output
INTP0 to INTP11	Input	External interrupt request input pin for which the valid edge (rising edge, falling edge, or both rising and falling edges) can be specified.
IrRxD	Input	IrDA receive data
IrTxD	Output	IrDA transmit data
IVCMP0	Input	Comparator 0 analog voltage input
IVCMP10 IVCMP11, IVCMP12, IVCMP13	Input	Comparator 1 analog voltage input/reference voltage input
IVREF0	Input	Comparator 0 reference voltage input
VCOUT0, VCOUT1	Output	Comparator output
KR0 to KR7	Input	Key interrupt input
PCLBUZ0, PCLBUZ1	Output	Clock output/buzzer output
PGAI	Input	PGA voltage input
PGAGND	Input	PGA reference voltage input
REGC	—	Pin for connecting regulator output stabilization capacitance for internal operation. Connect this pin to V_{SS} via a capacitor (0.47 to 1 μF). Also, use a capacitor with good characteristics, since it is used to stabilize internal voltage.
RTC1HZ	Output	Real-time clock correction clock (1 Hz) output
$\overline{\text{RESET}}$	Input	This is the active-low system reset input pin. When the external reset pin is not used, connect this pin directly or via a resistor to V_{DD}.
RxD0 to RxD2	Input	Serial data input pins of serial interface UART0 to UART2
TxD0 to TxD2	Output	Serial data output pins of serial interface UART0 to UART2
SCK00, SCK01, SCK10, SCK11, SCK20, SCK21	I/O	Serial clock I/O pins of serial interface CSI00, CSI01, CSI10, CSI11, CSI20, and CSI21
SCL00, SCL01, SCL10, SCL11, SCL20, SCL21	Output	Serial clock output pins of serial interface IIC00, IIC01, IIC10, IIC11, IIC20, and IIC21
SDA00, SDA01, SDA10, SDA11, SDA20, SDA21	I/O	Serial data I/O pins of serial interface IIC00, IIC01, IIC10, IIC11, IIC20, and IIC21
SI00, SI01, SI10, SI11, SI20, SI21	Input	Serial data input pins of serial interface CSI00, CSI01, CSI10, CSI11, CSI20, and CSI21
$\overline{\text{SSI00}}$	Input	Chip select input pin of serial interface CSI00
SO00, SO01, SO10, SO11, SO20, SO21	Output	Serial data output pins of serial interface CSI00, CSI01, CSI10, CSI11, CSI20, and CSI21
SCLA0	I/O	Serial clock I/O pins of serial interface IICA0
SDAA0	I/O	Serial data I/O pins of serial interface IICA0
TI00 to TI03	Input	The pins for inputting an external count clock/capture trigger to 16-bit timers 00 to 03
TO00 to TO03	Output	Timer output pins of 16-bit timers 00 to 03

(2/2)

Function Name	I/O	Function
TRJIO0	I/O	Timer RJ input/output
TRJO0	Output	Timer RJ output
TRDCLK	Input	Timer RD external clock input
TRDIOA0, TRDIOB0, TRDIOC0, TRDIOD0, TRDIOA1, TRDIOB1, TRDIOC1, TRDIOD1	I/O	Timer RD input/output
TRGIOA, TRGIOB	I/O	Timer RG input/output
TRGCLKA, TRGCLKB	Input	Timer RG external clock input
X1, X2	—	Resonator connection for main system clock
EXCLK	Input	External clock input for main system clock
XT1, XT2	—	Resonator connection for subsystem clock
EXCLKS	Input	External clock input for subsystem clock
V_{DD}	—	<24-pin, 32-pin, 48-pin> Positive power supply for all pins <36-pin, 64-pin> Positive power supply for P20 to P27, P121 to P124, P137 and other than ports
EV_{DD0}	—	Positive power supply for ports (other than P20 to P27, P121 to P124, P137)
AV_{REFP}	Input	A/D converter reference potential (+ side) input
AV_{REFM}	Input	A/D converter reference potential (- side) input
V_{SS}	—	<24-pin, 32-pin, 36-pin, 48-pin> Ground potential for all pins <64-pin> Ground potential for P20 to P27, P121 to P124, P137 and other than ports
EV_{SS0}	—	Ground potential for ports (other than P20 to P27, P121 to P124, P137)
TOOLRxD	Input	UART reception pin for the external device connection used during flash memory programming
TOOLTxD	Output	UART transmission pin for the external device connection used during flash memory programming
TOOL0	I/O	Data I/O for flash memory programmer/debugger

Caution **After reset release, the relationships between P40/TOOL0 and the operating mode are as follows.**

Table 2 - 2 Relationships Between P40/TOOL0 and Operation Mode After Reset Release

P40/TOOL0	Operating mode
EV_{DD}	Normal operation mode
0 V	Flash memory programming mode

For details, see 33.4 Programming Method.

Remark Use bypass capacitors (about 0.1 μF) as noise and latch up countermeasures with relatively thick wires at the shortest distance to V_{DD} to V_{SS} and EV_{DD0} to EV_{SS0} lines.

2.3 Connection of Unused Pins

Table 2 - 3 shows the Connection of Unused Pins.

Remark The mounted pins depend on the product. Refer to **1.3 Pin Configuration (Top View)** and **2.1 Port Functions**.

Table 2 - 3 Connection of Unused Pins

Pin Name	I/O	Recommended Connection of Unused Pins
P00 to P06	I/O	Input: Independently connect to EV_{DD0} or EV_{SS0} via a resistor. Output: Leave open.
P10 to P17		
P20 to P27		Input: Independently connect to V_{DD} or V_{SS} via a resistor. Output: Leave open.
P30, P31		Input: Independently connect to EV_{DD0} or EV_{SS0} via a resistor. Output: Leave open.
P40/TOOL0		Input: Independently connect to EV_{DD0} via a resistor, or leave open. Output: Leave open.
P41 to P43		Input: Independently connect to EV_{DD0} or EV_{SS0} via a resistor. Output: Leave open.
P50 to P55		
P60 to P63		Input: Independently connect to EV_{DD0} or EV_{SS0} via a resistor. Output: Set the port's output latch to 0 and leave the pins open, or set the port's output latch to 1 and independently connect the pins to EV_{DD0} or EV_{SS0} via a resistor.
P70 to P77		Input: Independently connect to EV_{DD0} or EV_{SS0} via a resistor. Output: Leave open.
P120		
P121 to P124	Input	Independently connect to V_{DD} or V_{SS} via a resistor.
P130	Output	Leave open.
P137	Input	Independently connect to V_{DD} or V_{SS} via a resistor.
P140, P141, P146, P147	I/O	Input: Independently connect to EV_{DD0} or EV_{SS0} via a resistor. Output: Leave open.
P150 to P156		Input: Independently connect to V_{DD} or V_{SS} via a resistor. Output: Leave open.
$\overline{\text{RESET}}$	Input	Connect to V_{DD} directly or via a resistor.
REGC	—	Connect to V_{SS} via a capacitor (0.47 to 1 μF).

Remark With products not provided with an EV_{DD0} or EV_{SS0} pin, replace EV_{DD0} with V_{DD}, or replace EV_{SS0} with V_{SS}.

2.4 Pin Block Diagrams

For the pin types listed in 2.1.1 24-pin products to 2.1.5 64-pin products, pin block diagrams are shown in Figures 2 - 1 to 2 - 25.

Figure 2 - 1 Pin Block Diagram of Pin Type 1-1-1

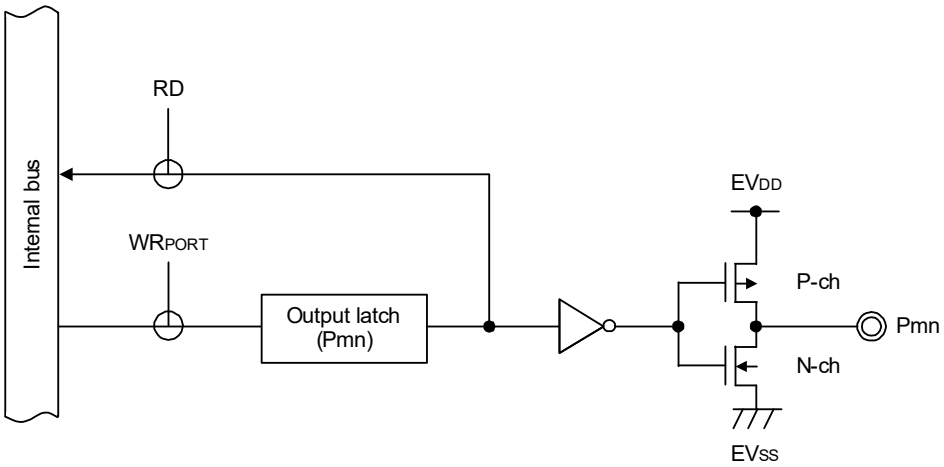

Figure 2 - 2 Pin Block Diagram of Pin Type 2-1-1

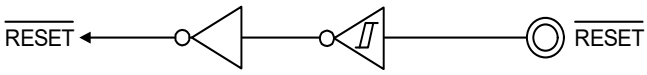

Figure 2 - 3 Pin Block Diagram of Pin Type 2-1-2

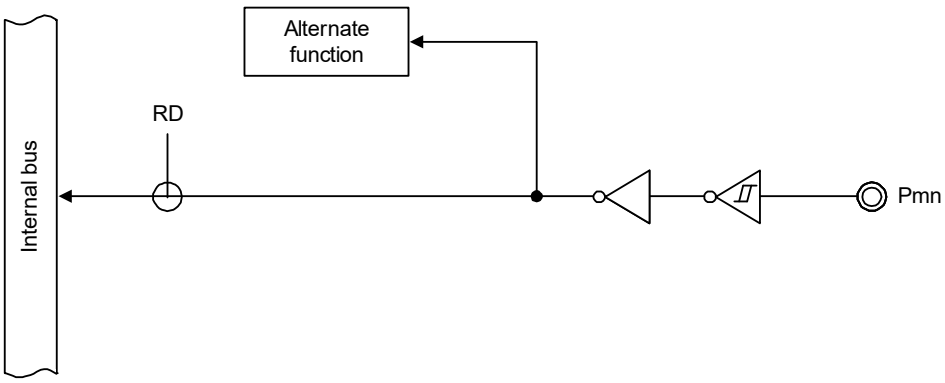

Remark Refer to **2.1 Port Functions** for alternate functions.

Figure 2 - 4 Pin Block Diagram of Pin Type 2-2-1

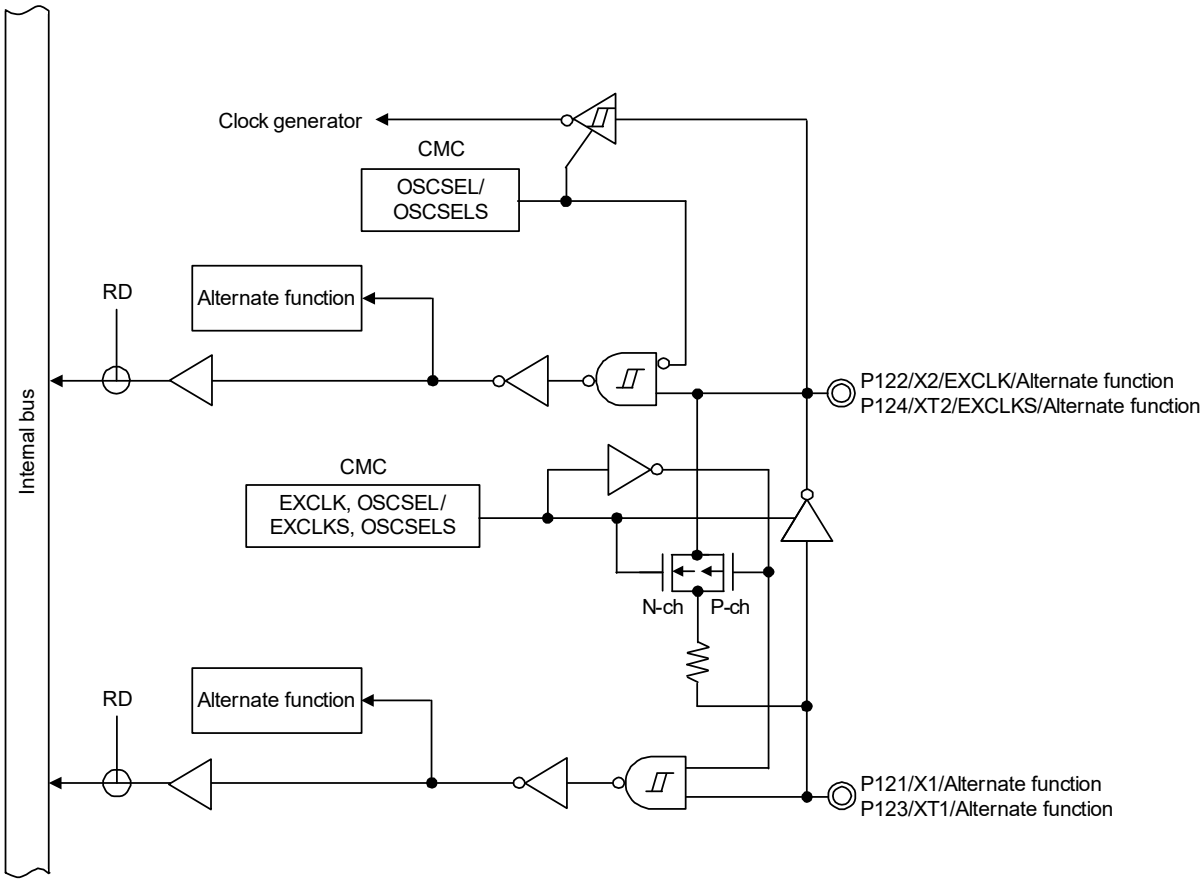

Remark Refer to **2.1 Port Functions** for alternate functions.

Figure 2 - 5 Pin Block Diagram of Pin Type 4-3-3

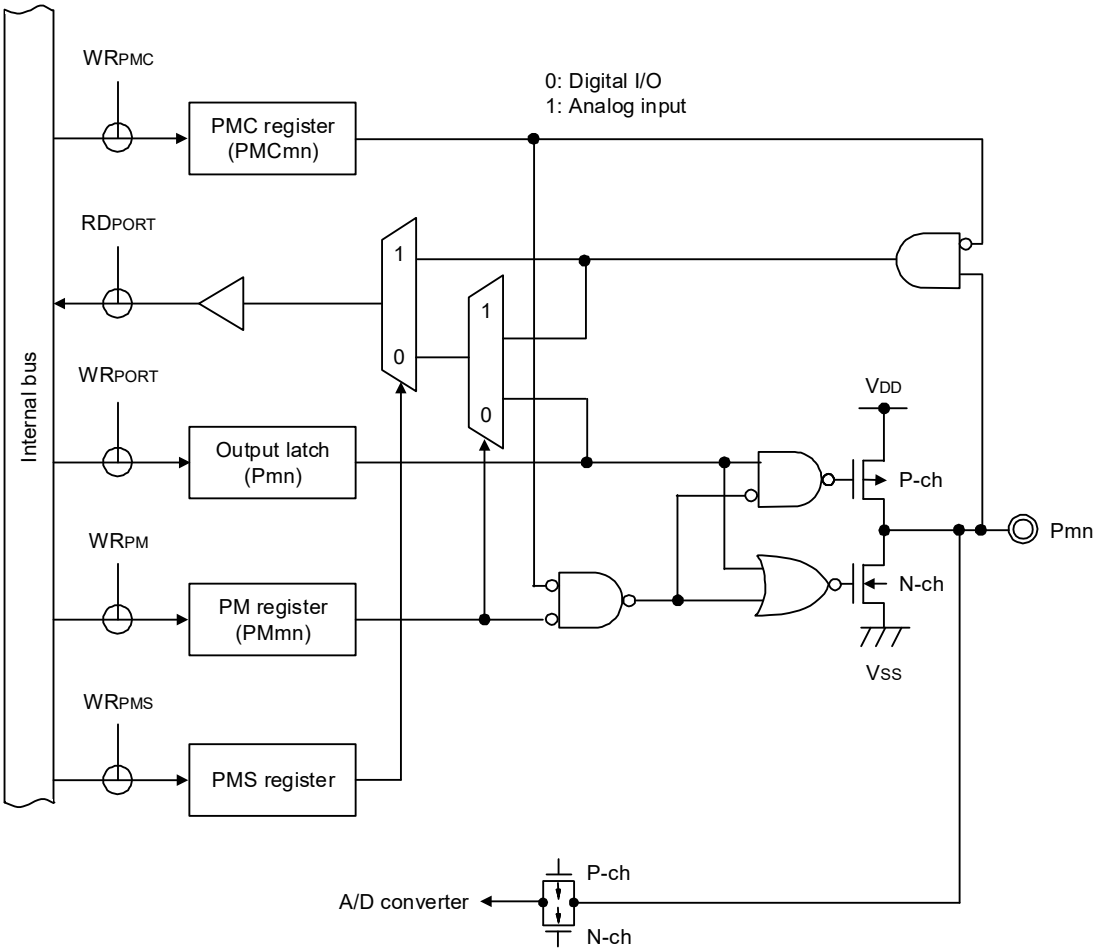

Figure 2 - 6 Pin Block Diagram of Pin Type 4-9-1

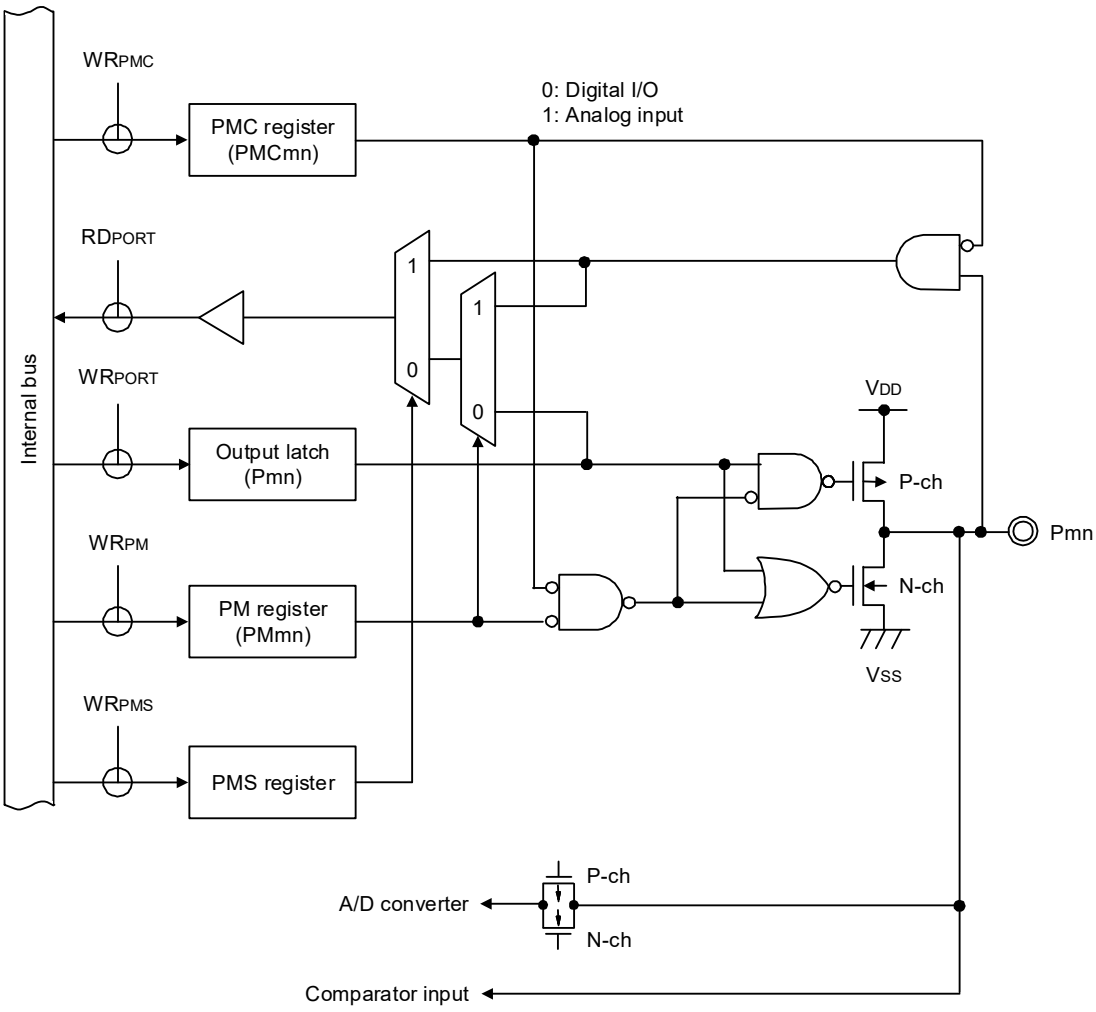

Figure 2 - 7 Pin Block Diagram of Pin Type 4-15-1

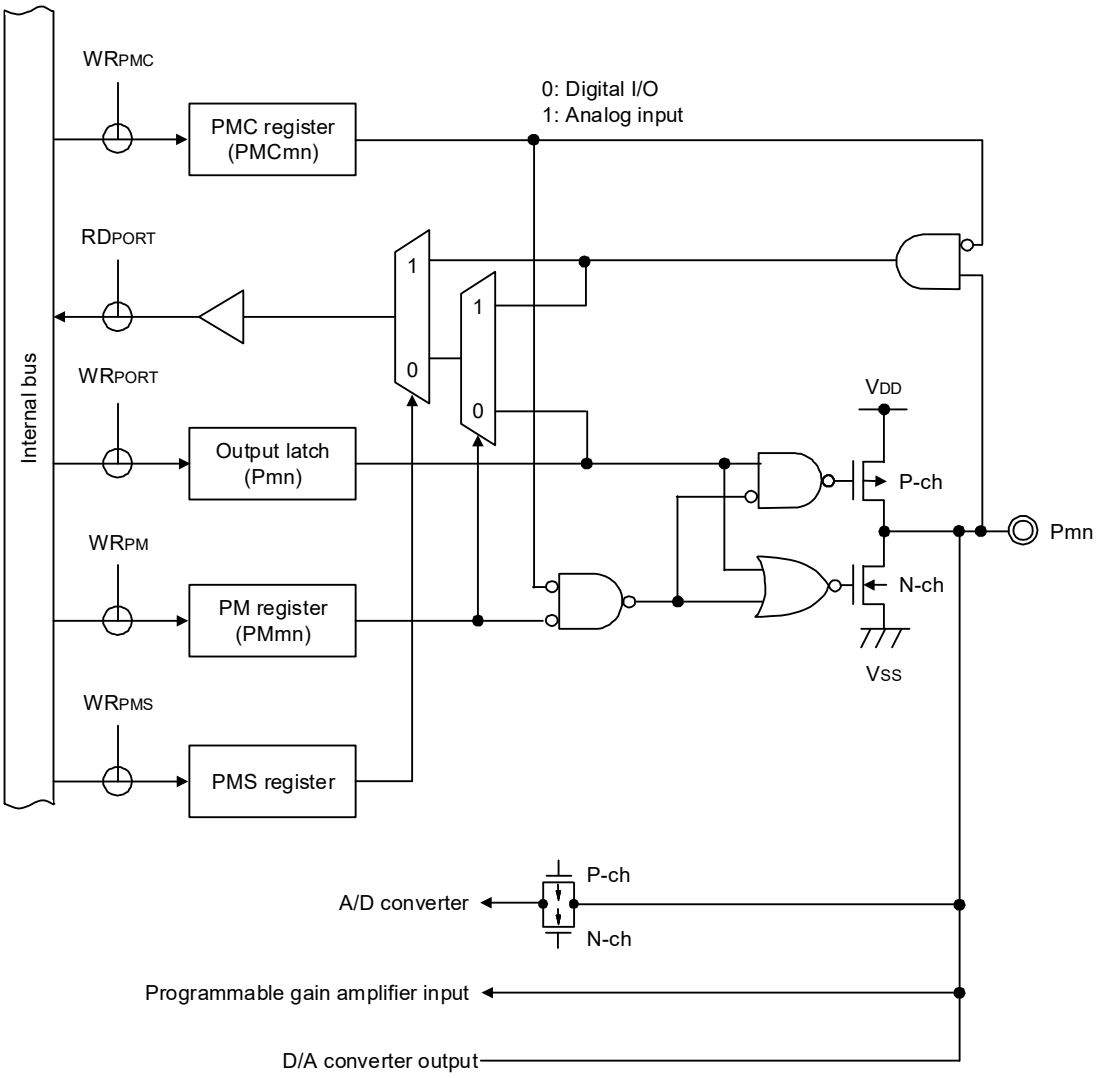

Figure 2 - 8 Pin Block Diagram of Pin Type 4-16-1

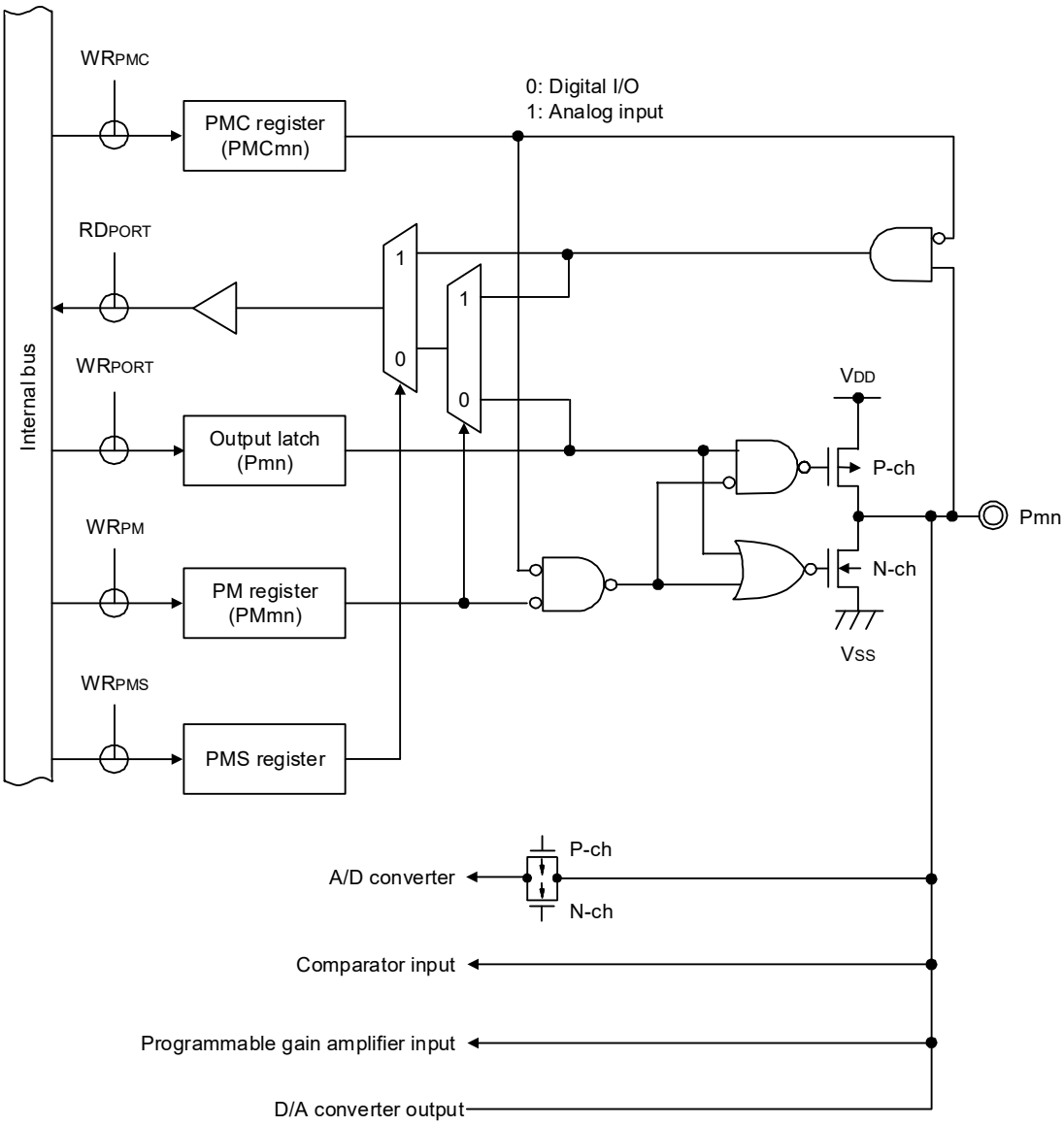

Figure 2 - 9 Pin Block Diagram of Pin Type 7-1-3

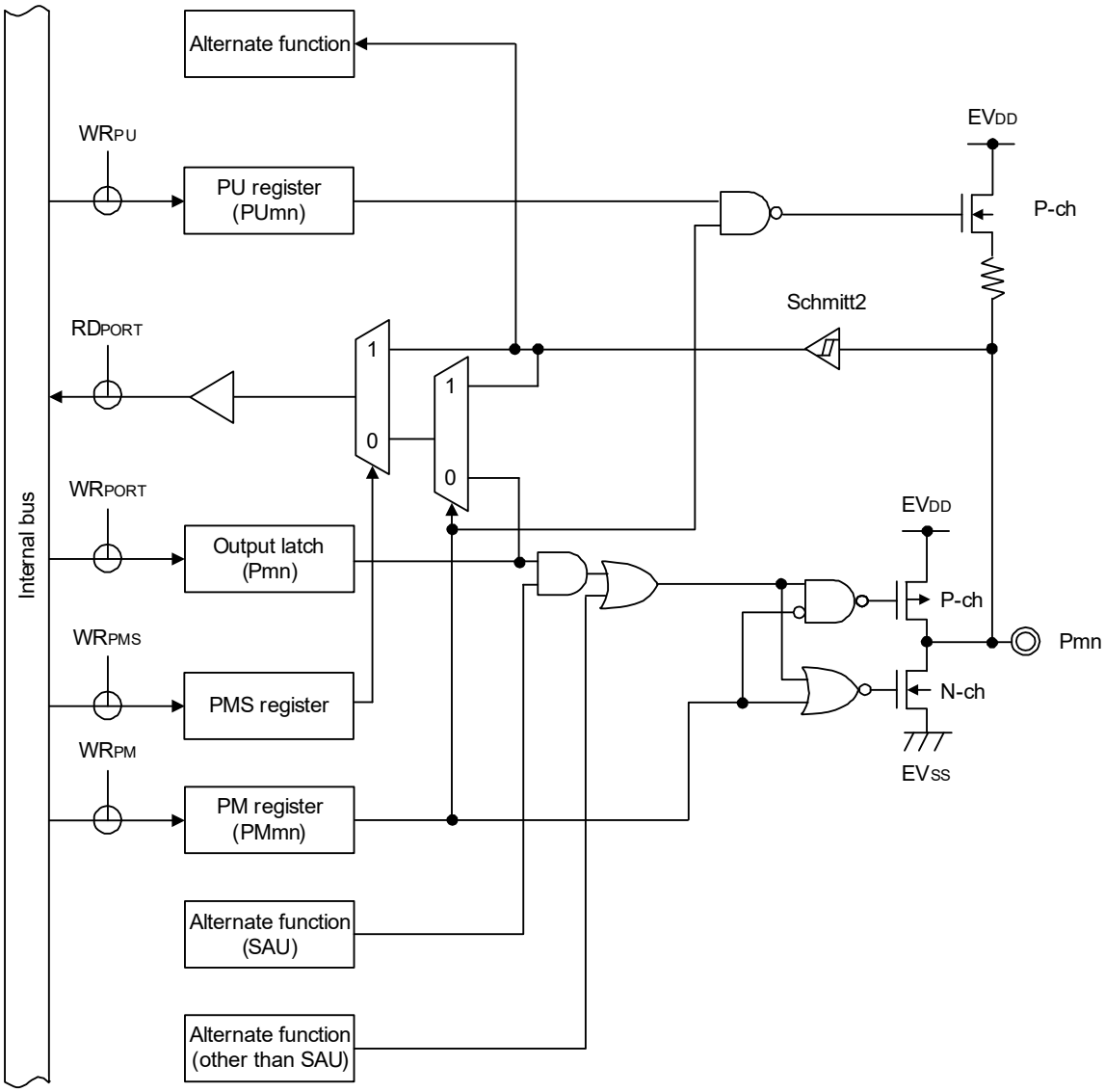

Remark 1. Refer to **2.1 Port Functions** for alternate functions.

Remark 2. SAU: Serial array unit

Figure 2 - 10 Pin Block Diagram of Pin Type 7-1-4

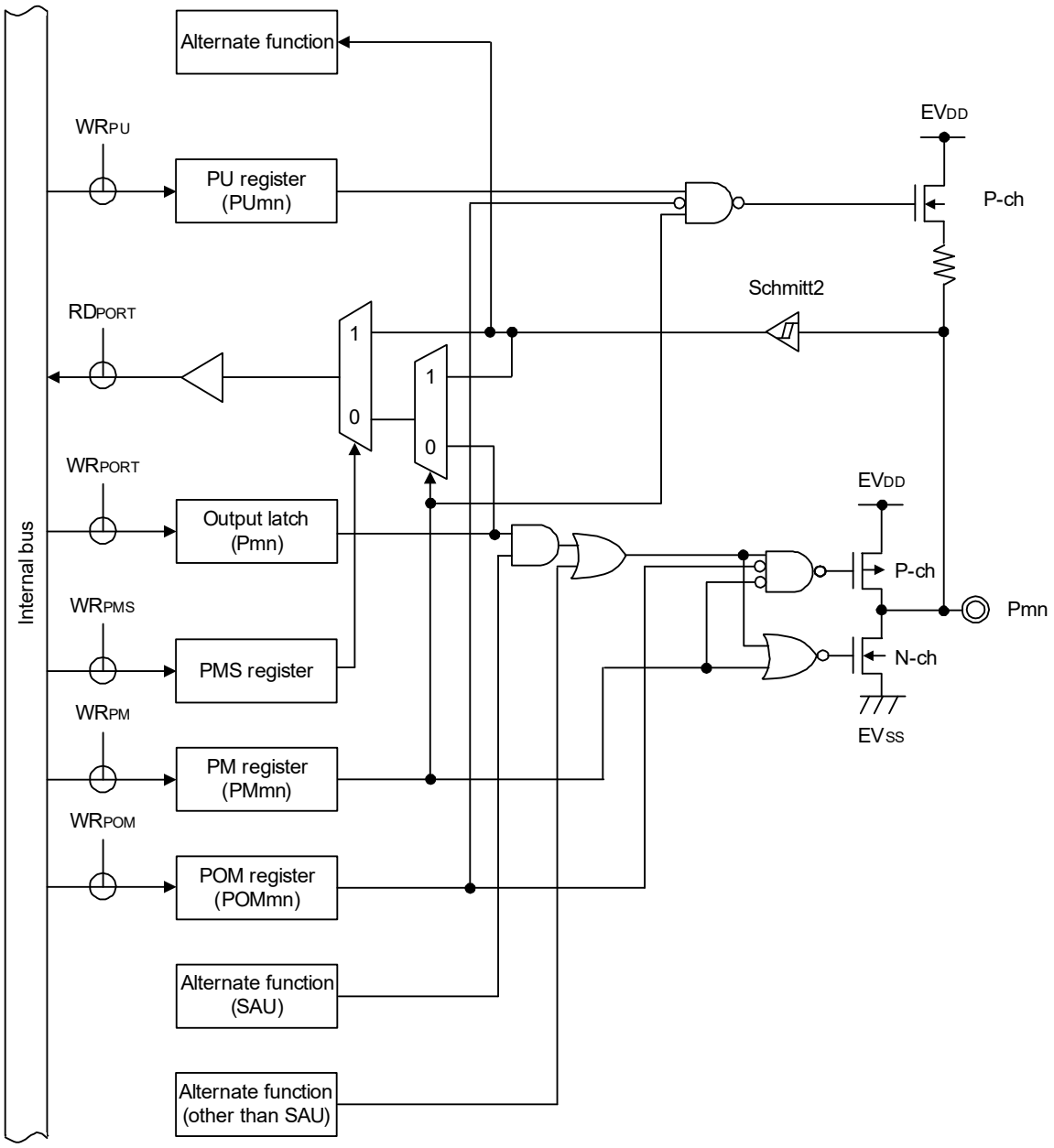

Caution **A through current may flow through if the pin is in the intermediate potential, because the input buffer is also turned on when the pin is in N-ch open-drain output mode by port output mode register (POMx).**

Remark 1. Refer to **2.1 Port Functions** for alternate functions.
Remark 2. SAU: Serial array unit

Figure 2 - 11 Pin Block Diagram of Pin Type 7-1-7

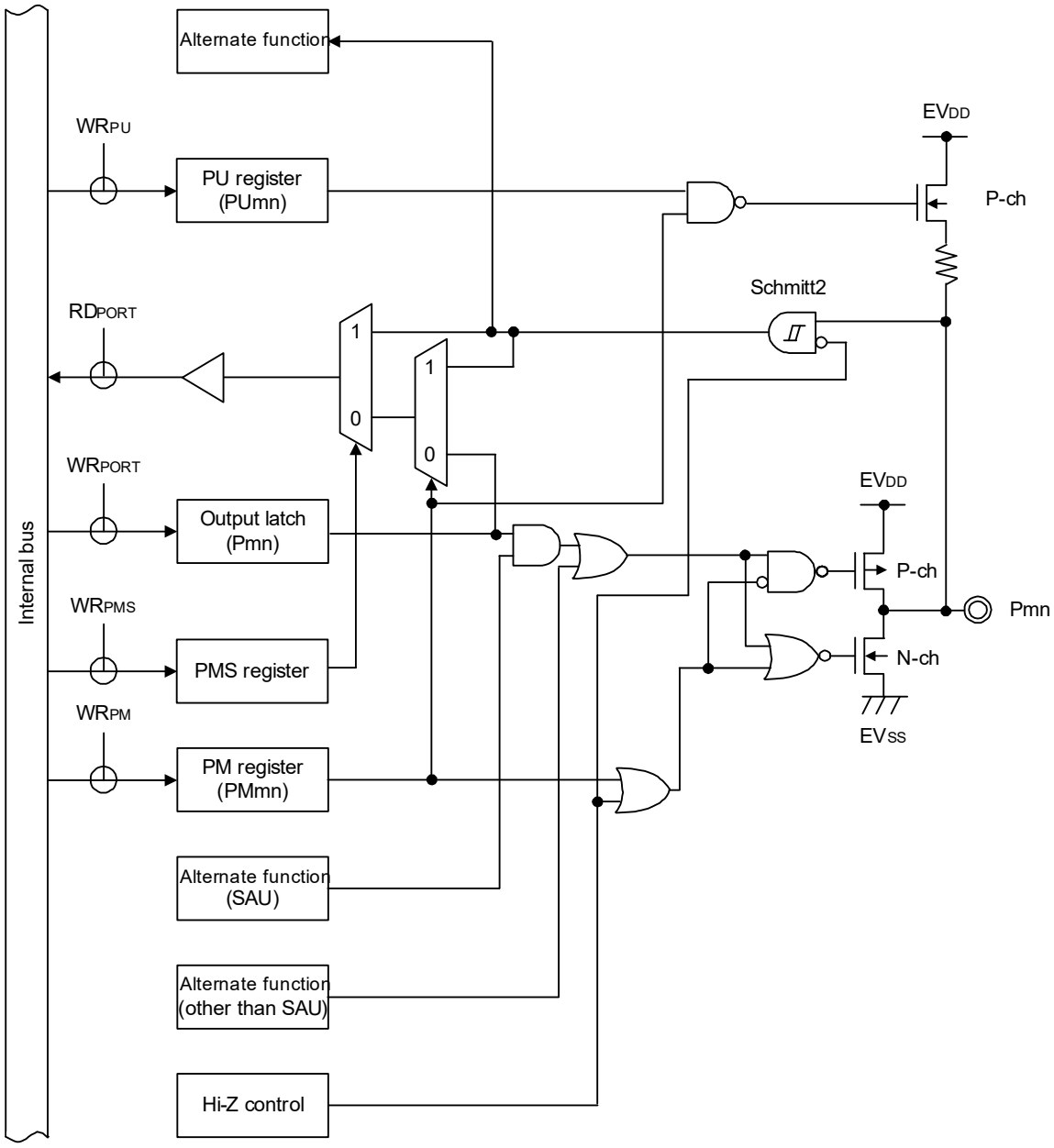

Remark 1. Refer to **2.1 Port Functions** for alternate functions.

Remark 2. SAU: Serial array unit

Figure 2 - 12 Pin Block Diagram of Pin Type 7-1-8

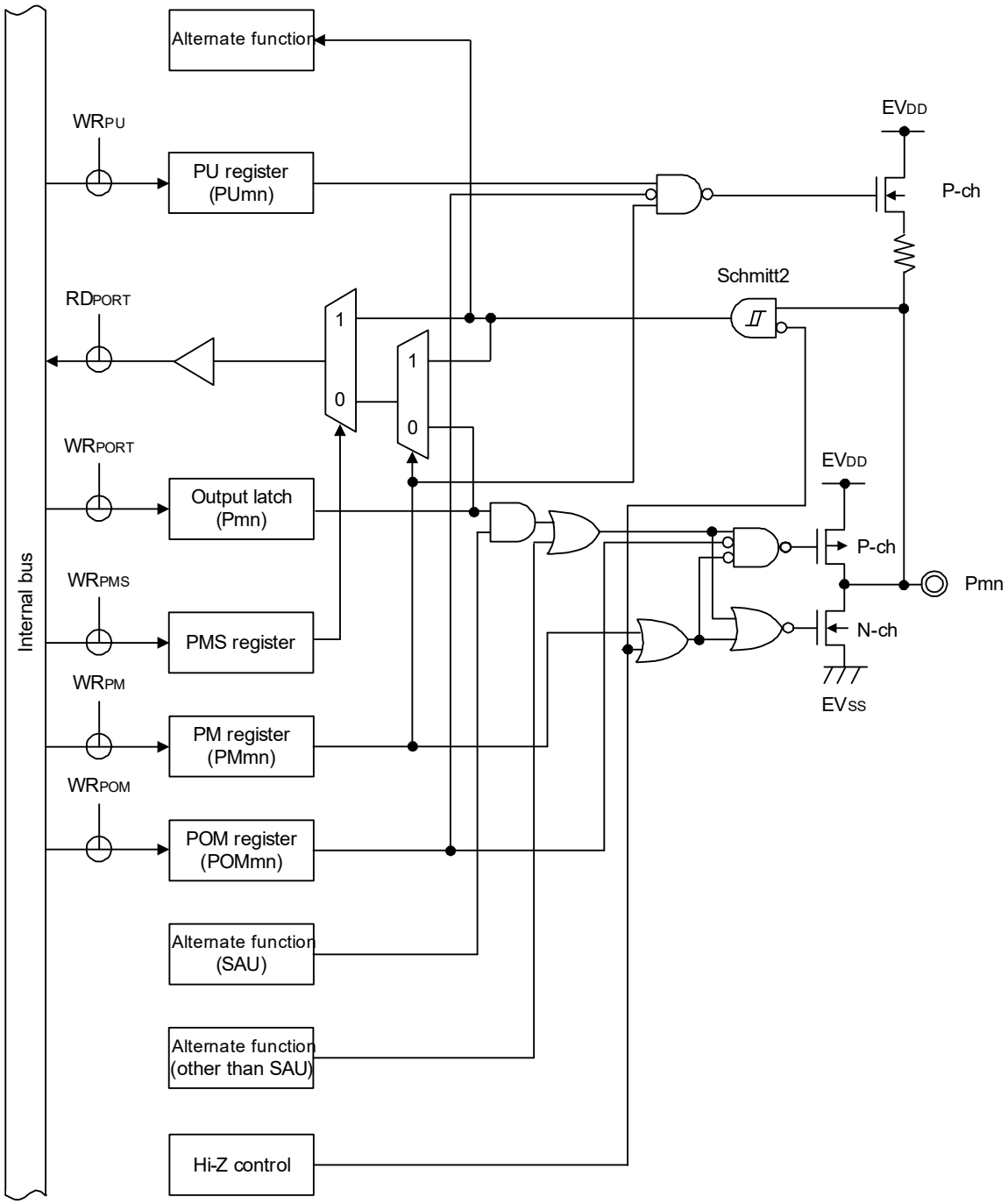

Caution **A through current may flow through if the pin is in the intermediate potential, because the input buffer is also turned on when the pin is in N-ch open-drain output mode by port output mode register (POMx).**

Remark 1. Refer to **2.1 Port Functions** for alternate functions.

Remark 2. SAU: Serial array unit

Figure 2 - 13 Pin Block Diagram of Pin Type 7-3-3

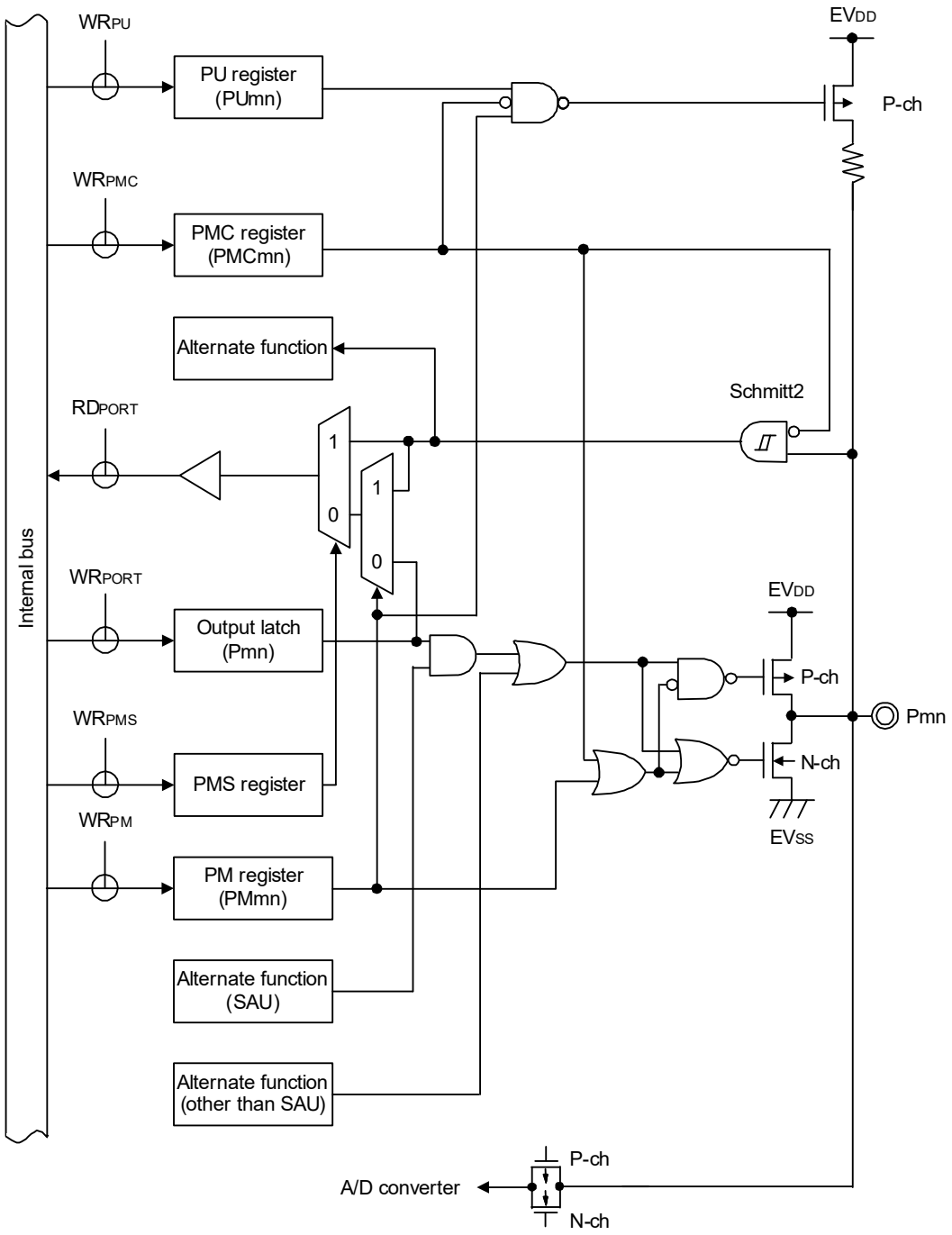

Remark 1. Refer to **2.1 Port Functions** for alternate functions.

Remark 2. SAU: Serial array unit

Figure 2 - 14 Pin Block Diagram of Pin Type 7-3-7

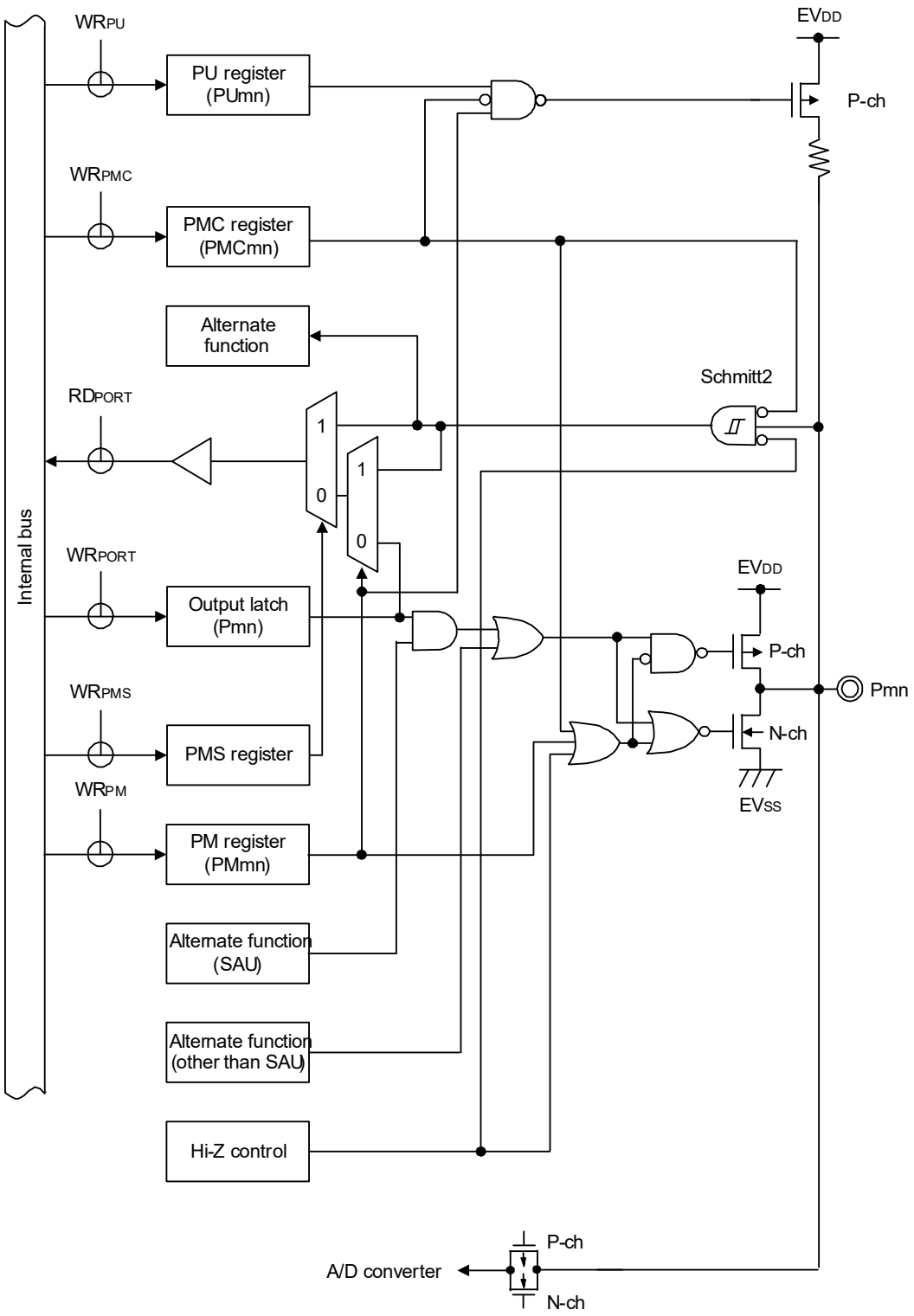

Remark 1. Refer to **2.1 Port Functions** for alternate functions.

Remark 2. SAU: Serial array unit

Figure 2 - 15 Pin Block Diagram of Pin Type 7-3-8

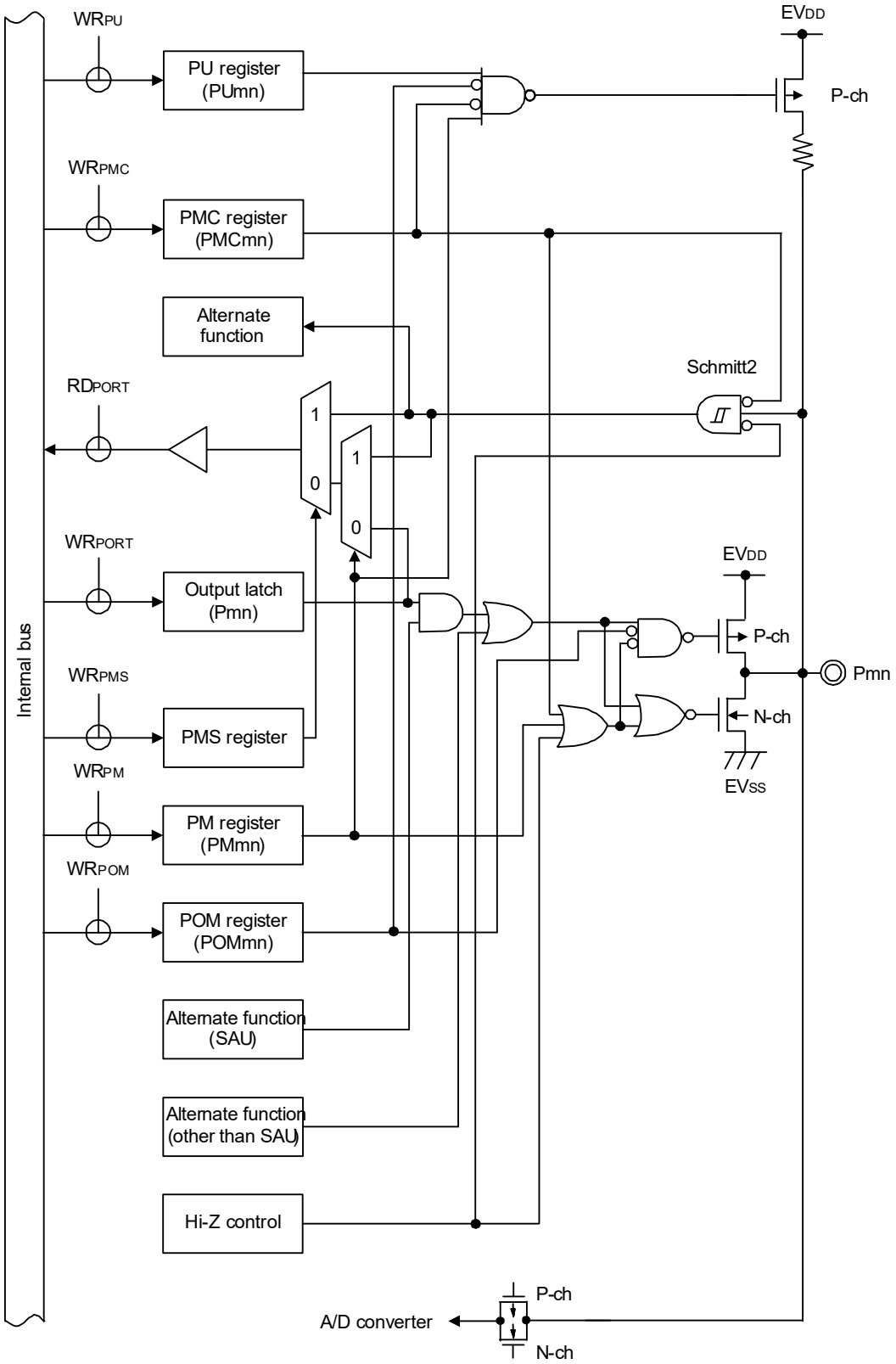

Remark 1. Refer to **2.1 Port Functions** for alternate functions.

Remark 2. SAU: Serial array unit

Figure 2 - 16 Pin Block Diagram of Pin Type 7-9-1

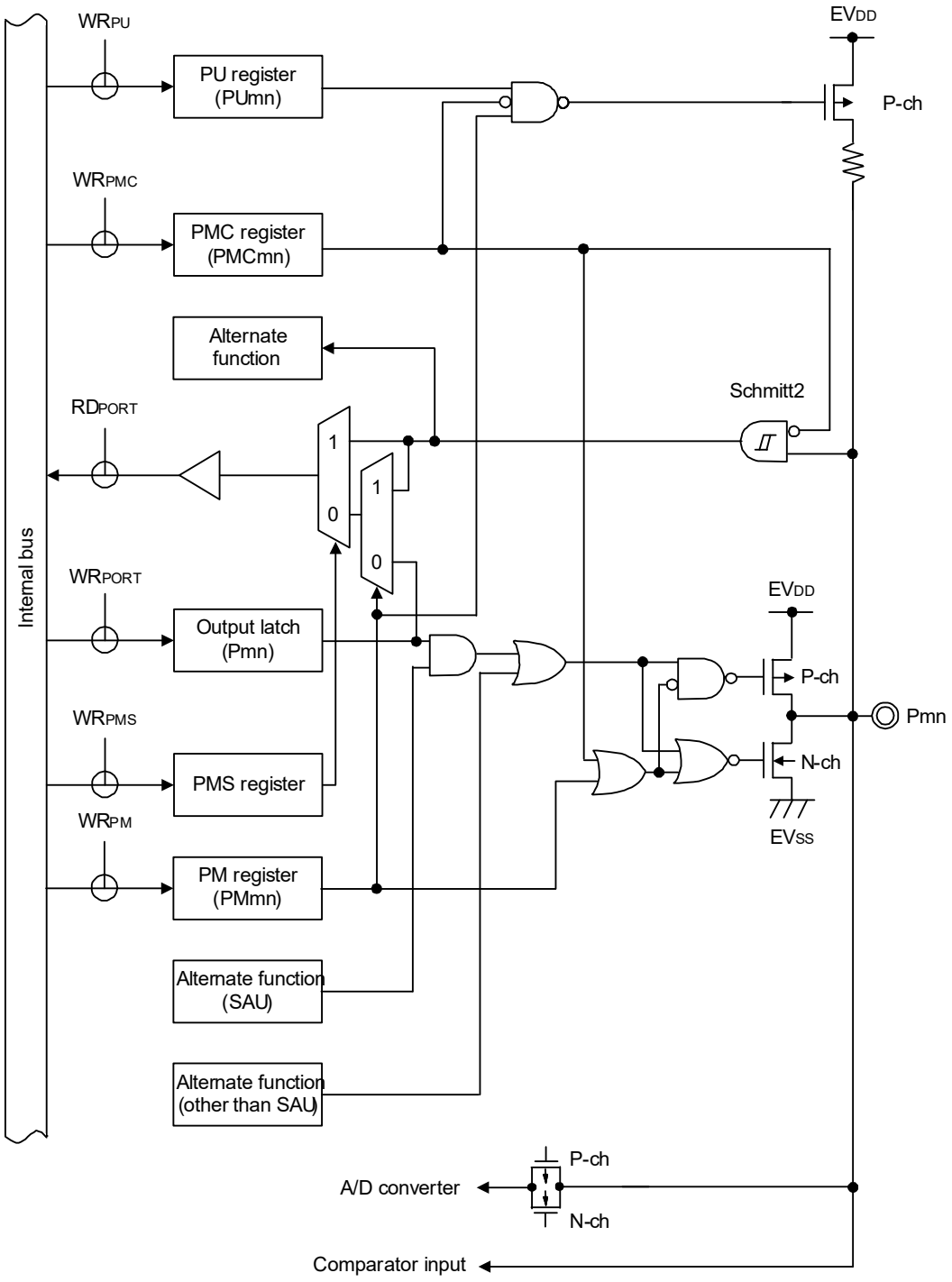

Remark 1. Refer to **2.1 Port Functions** for alternate functions.

Remark 2. SAU: Serial array unit

Figure 2 - 17 Pin Block Diagram of Pin Type 7-9-2

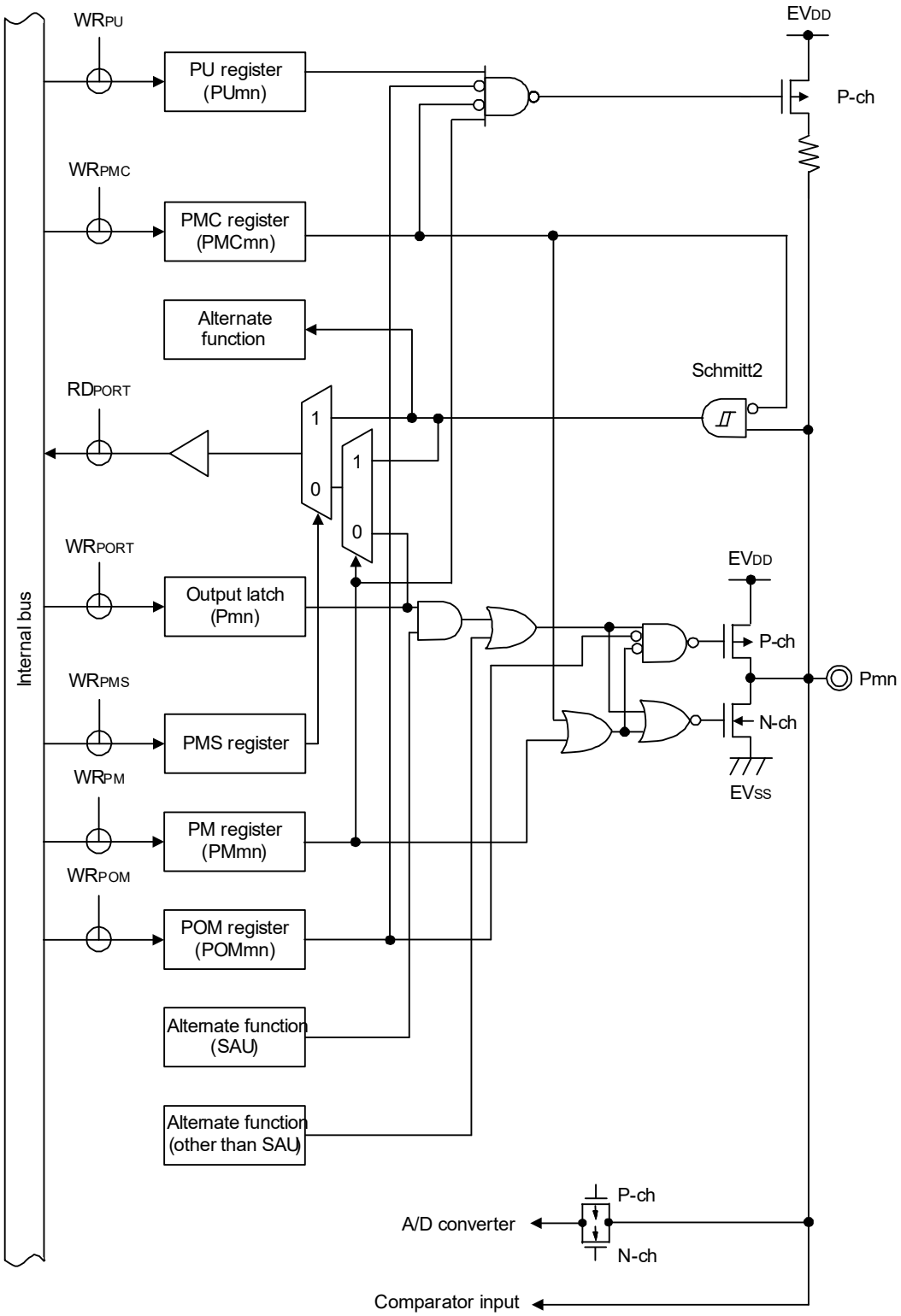

Caution **A through current may flow through if the pin is in the intermediate potential, because the input buffer is also turned on when the pin is in N-ch open-drain output mode by port output mode register (POMx).**

Remark 1. Refer to **2.1 Port Functions** for alternate functions.

Remark 2. SAU: Serial array unit

Figure 2 - 18 Pin Block Diagram of Pin Type 8-1-3

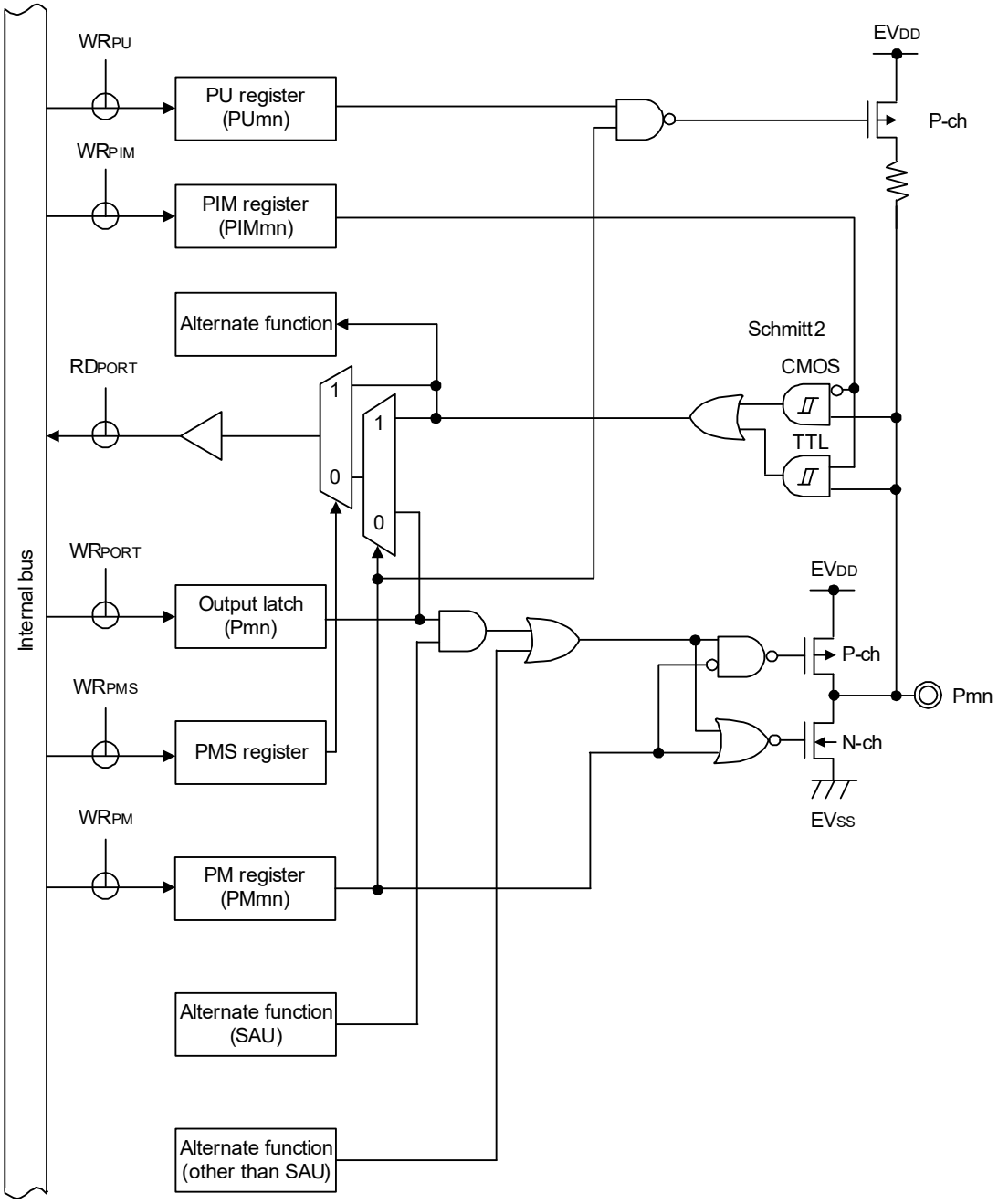

Caution **Because of TTL input buffer structure, if the port input mode register (PIMx) is set in TTL input buffer, a through current may flow through in the case of high level input. It is recommended to input a low level to prevent a through current.**

Remark 1. Refer to **2.1 Port Functions** for alternate functions.
Remark 2. SAU: Serial array unit

Figure 2 - 19 Pin Block Diagram of Pin Type 8-1-4

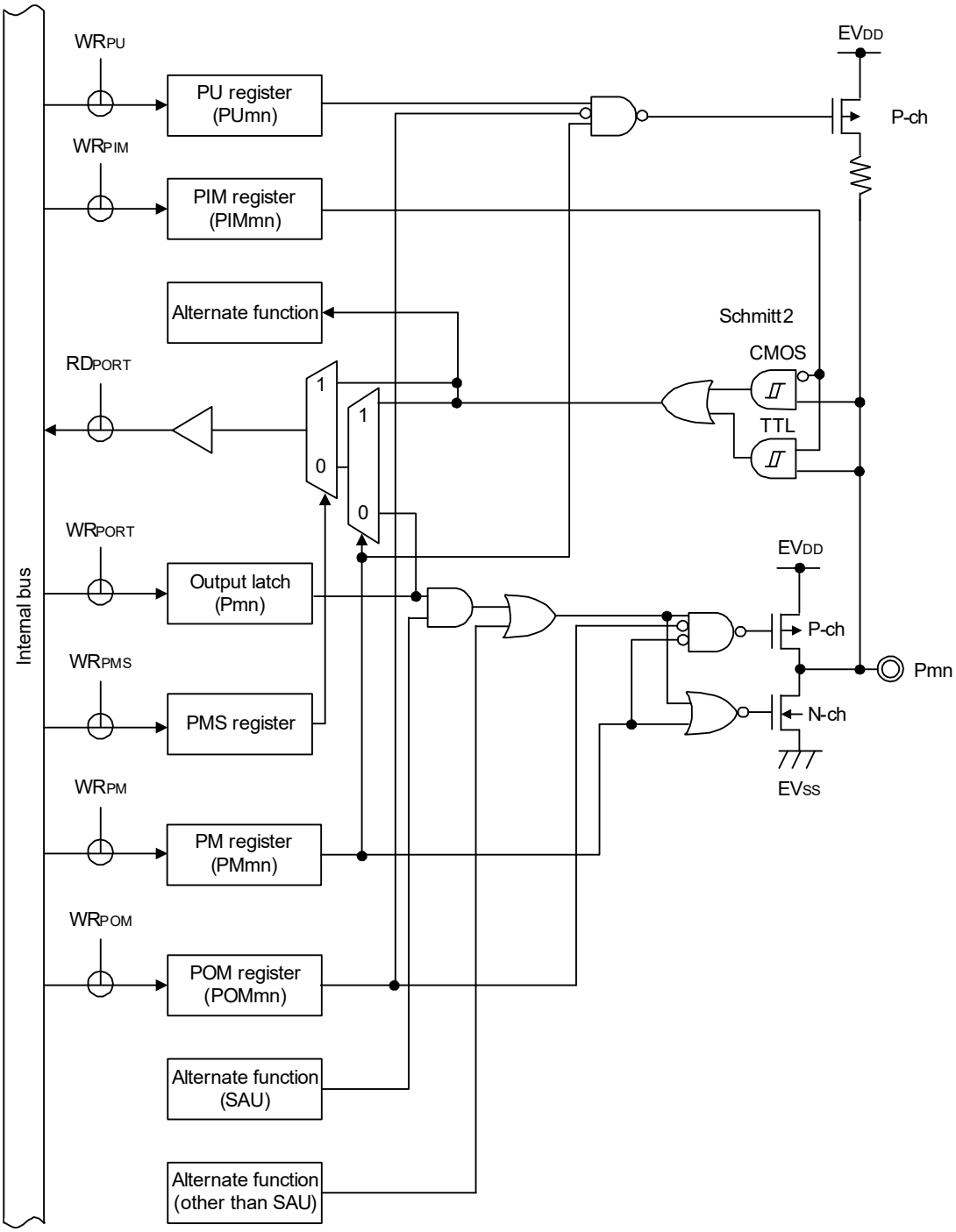

Caution 1. A through current may flow through if the pin is in the intermediate potential, because the input buffer is also turned on when the pin is in N-ch open-drain output mode by port output mode register (POMx).

Caution 2. Because of TTL input buffer structure, if the port input mode register (PIMx) is set in TTL input buffer, a through current may flow through in the case of high level input. It is recommended to input a low level to prevent a through current.

Remark 1. Refer to **2.1 Port Functions** for alternate functions.

Remark 2. SAU: Serial array unit

Figure 2 - 20 Pin Block Diagram of Pin Type 8-1-7

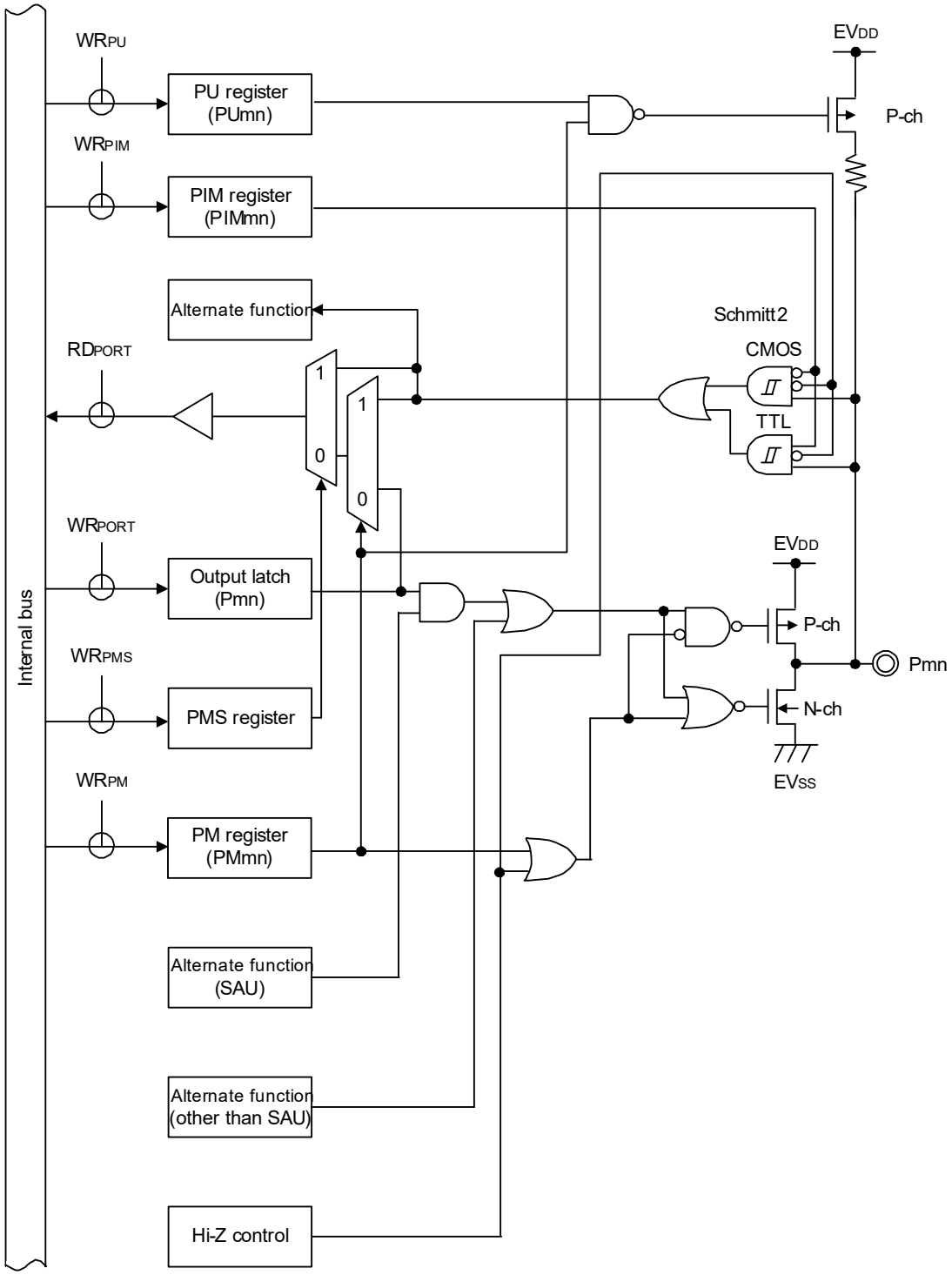

Caution **Because of TTL input buffer structure, if the port input mode register (PIMx) is set in TTL input buffer, a through current may flow through in the case of high level input. It is recommended to input a low level to prevent a through current.**

Remark 1. Refer to **2.1 Port Functions** for alternate functions.

Remark 2. SAU: Serial array unit

Figure 2 - 21 Pin Block Diagram of Pin Type 8-1-8

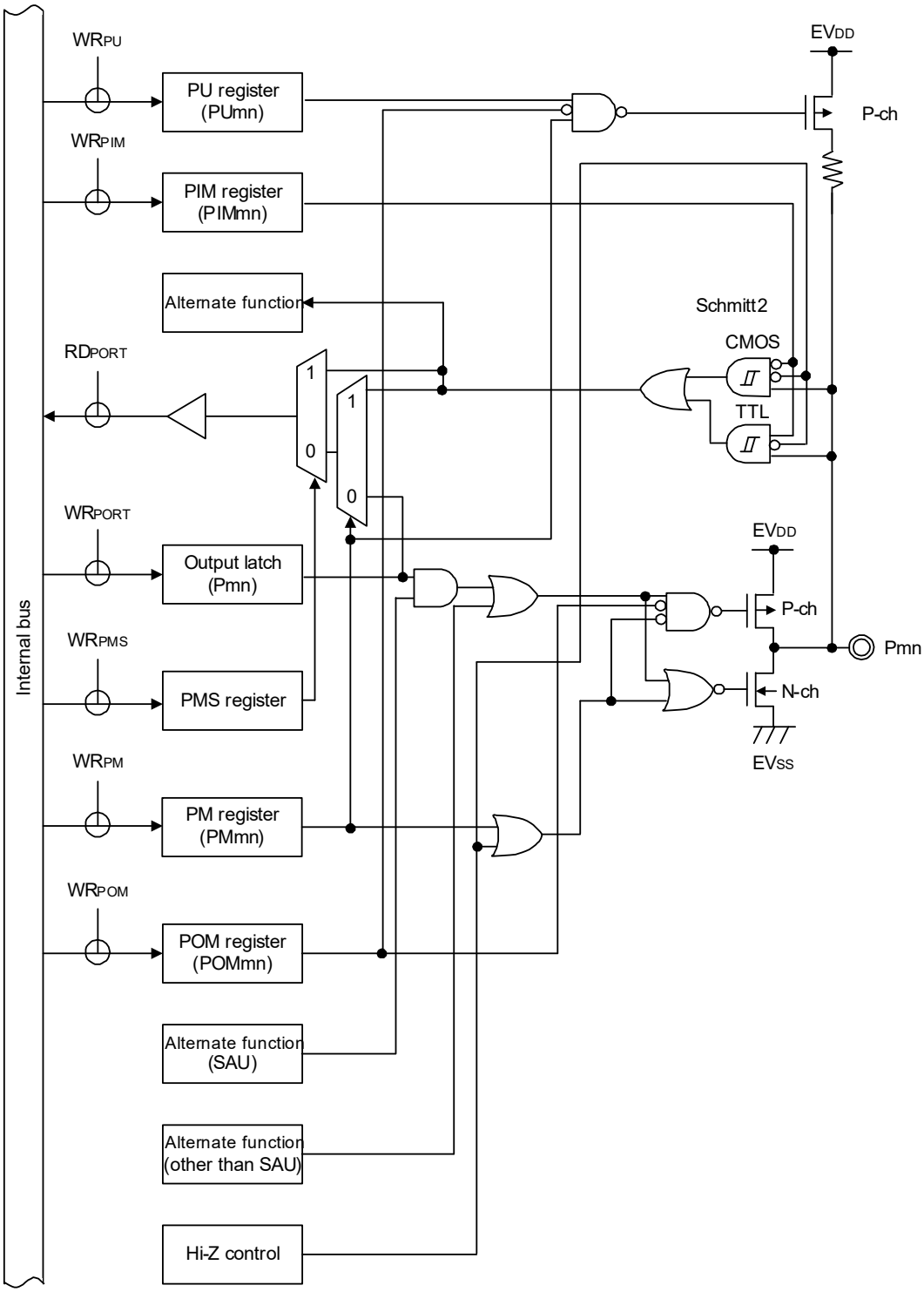

Caution 1. A through current may flow through if the pin is in the intermediate potential, because the input buffer is also turned on when the pin is in N-ch open-drain output mode by port output mode register (POMx).

Caution 2. Because of TTL input buffer structure, if the port input mode register (PIMx) is set in TTL input buffer, a through current may flow through in the case of high level input. It is recommended to input a low level to prevent a through current.

Remark 1. Refer to **2.1 Port Functions** for alternate functions.

Remark 2. SAU: Serial array unit

Figure 2 - 22 Pin Block Diagram of Pin Type 8-3-8

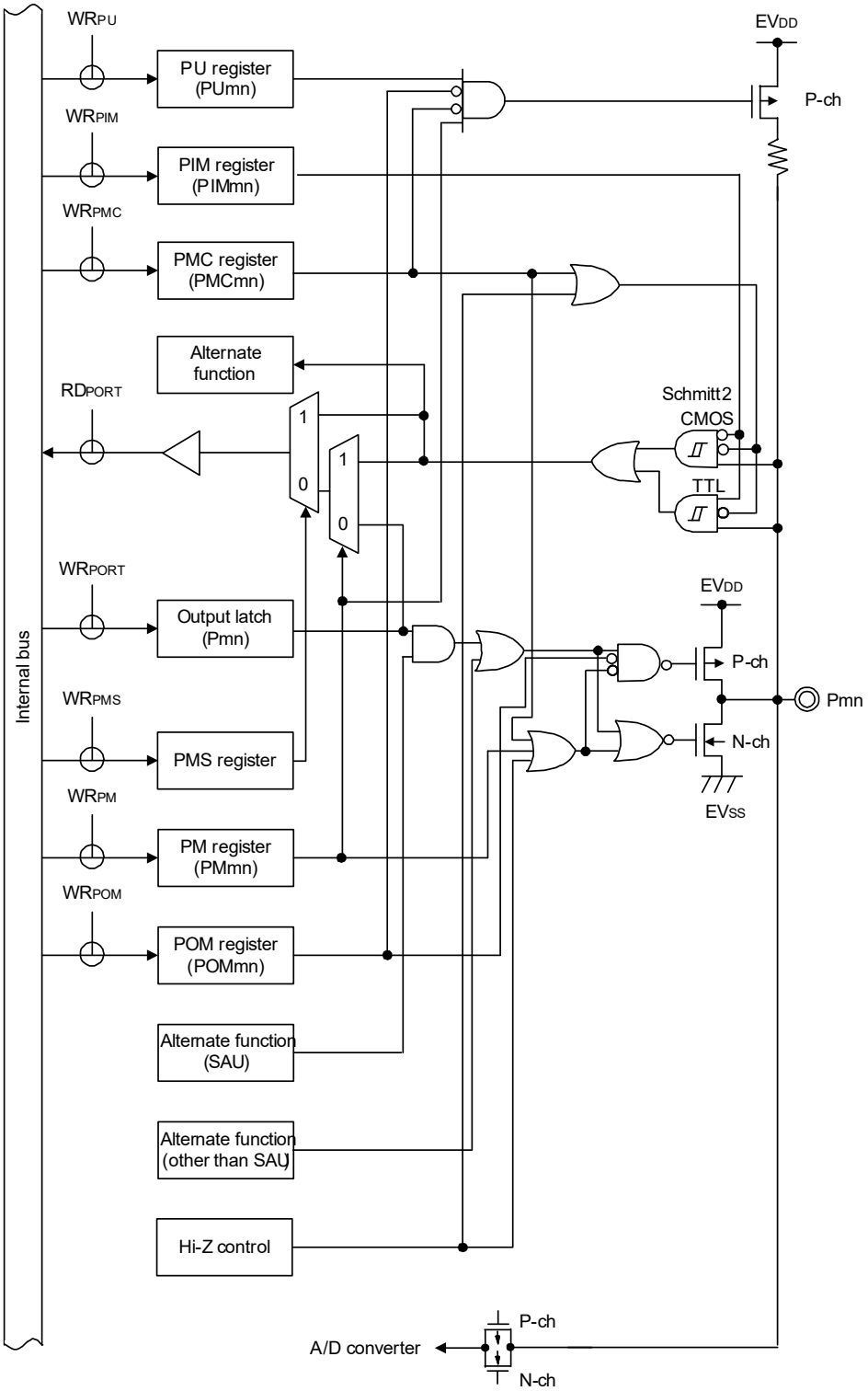

Caution 1. A through current may flow through if the pin is in the intermediate potential, because the input buffer is also turned on when the pin is in N-ch open-drain output mode by port output mode register (POMx).

Caution 2. Because of TTL input buffer structure, if the port input mode register (PIMx) is set in TTL input buffer, a through current may flow through in the case of high level input. It is recommended to input a low level to prevent a through current.

Remark 1. Refer to **2.1 Port Functions** for alternate functions.

Remark 2. SAU: Serial array unit

Figure 2 - 23 Pin Block Diagram of Pin Type 8-9-1

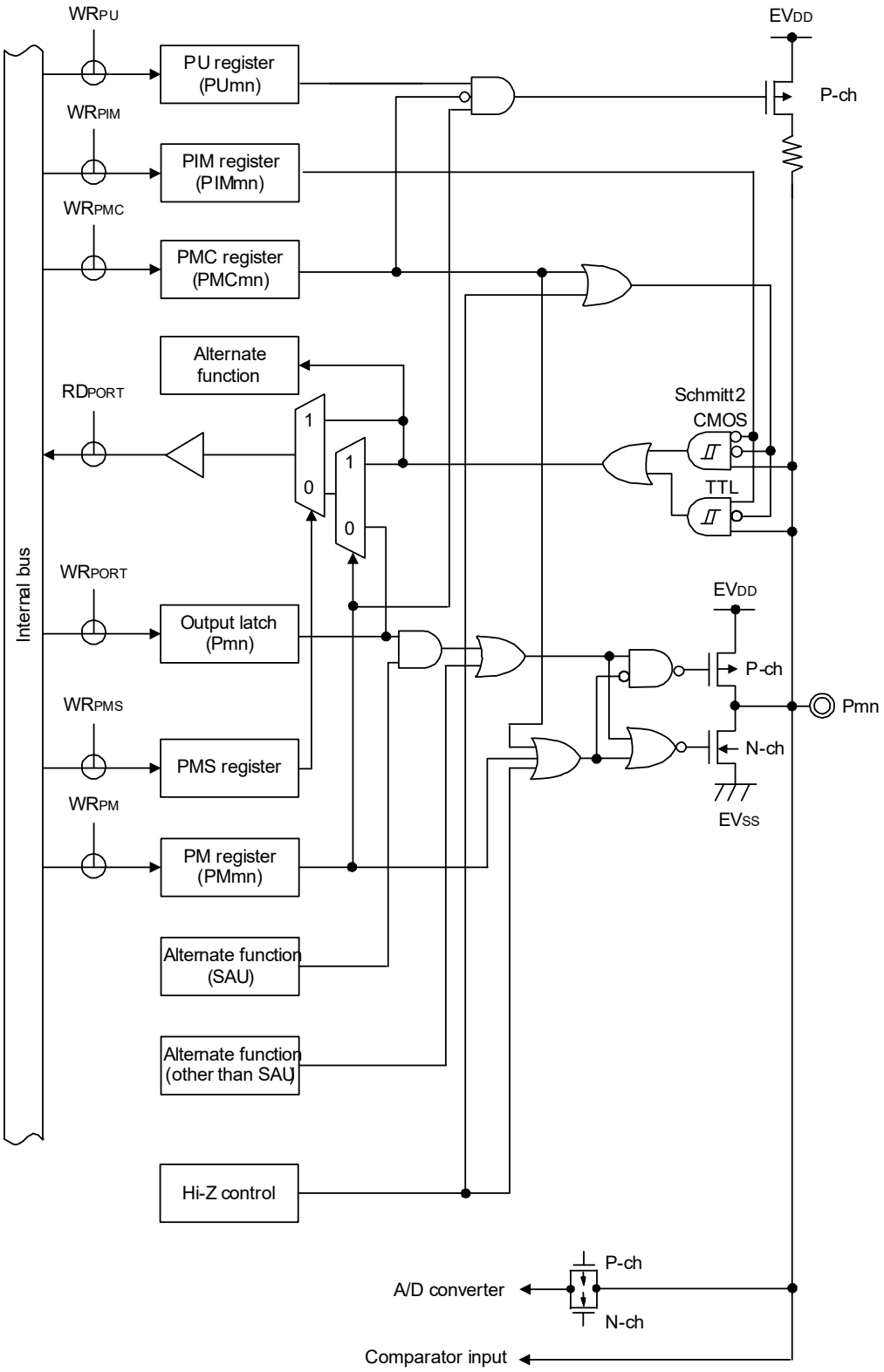

Caution **Caution Because of TTL input buffer structure, if the port input mode register (PIMx) is set in TTL input buffer, a through current may flow through in the case of high level input. It is recommended to input a low level to prevent a through current.**

Remark 1. Refer to **2.1 Port Functions** for alternate functions.

Remark 2. SAU: Serial array unit

Figure 2 - 24 Pin Block Diagram of Pin Type 8-9-2

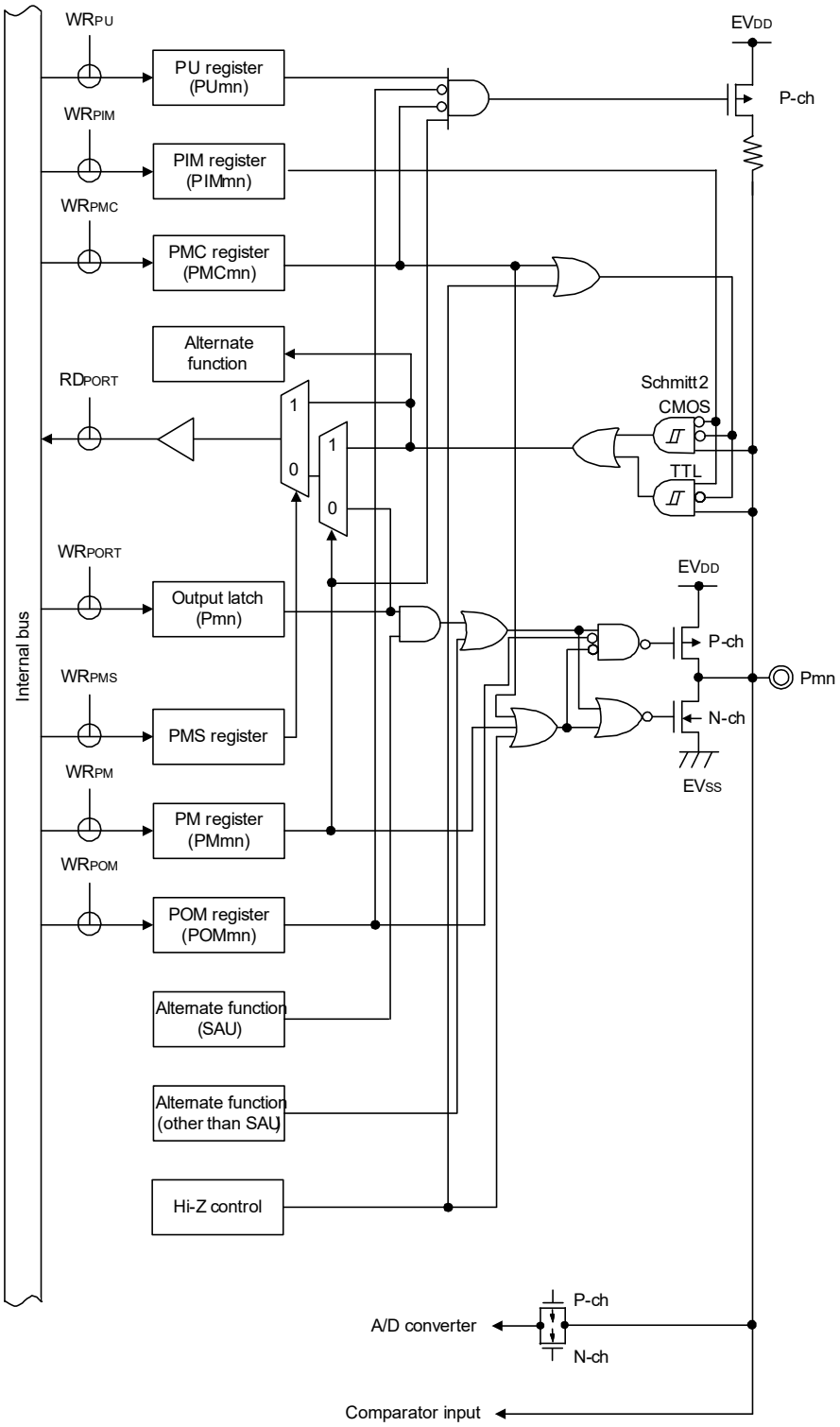

Caution 1. A through current may flow through if the pin is in the intermediate potential, because the input buffer is also turned on when the pin is in N-ch open-drain output mode by port output mode register (POMx).

Caution 2. Because of TTL input buffer structure, if the port input mode register (PIMx) is set in TTL input buffer, a through current may flow through in the case of high level input. It is recommended to input a low level to prevent a through current.

Remark 1. Refer to **2.1 Port Functions** for alternate functions.

Remark 2. SAU: Serial array unit

Figure 2 - 25 Pin Block Diagram of Pin Type 12-1-2

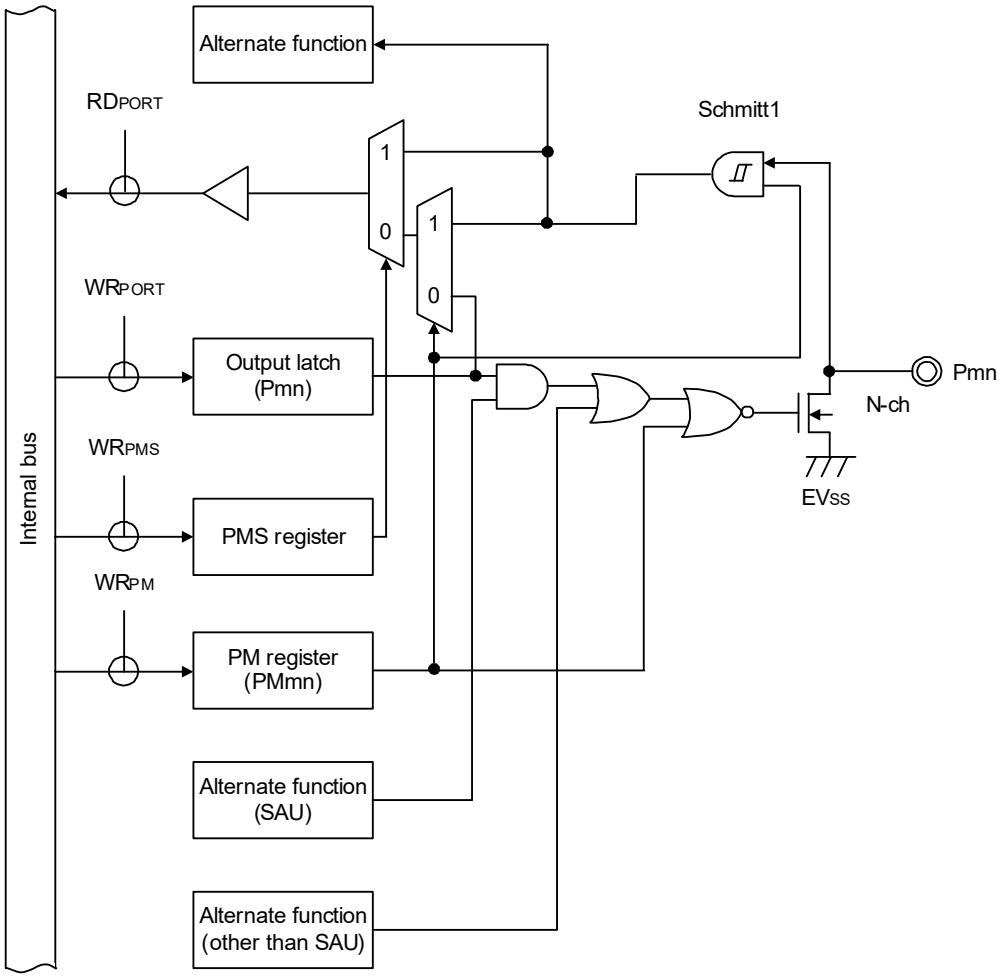

Remark 1. Refer to **2.1 Port Functions** for alternate functions.

Remark 2. SAU: Serial array unit

CHAPTER 3 CPU ARCHITECTURE

3.1 Overview

The CPU core in the RL78 microcontroller employs the Harvard architecture which has independent instruction fetch bus, address bus and data bus. In addition, through the adoption of three-stage pipeline control of fetch, decode, and memory access, the operation efficiency is remarkably improved over the conventional CPU core. The CPU core features high performance and highly functional instruction processing, and can be suited for use in various applications that require high speed and highly functional processing.

The RL78/G1F integrates the RL78-S3 core that has the following features.

- 3-stage pipeline CISC architecture
- Address space: 1 Mbyte
- Minimum instruction execution time : One instruction per clock cycle
- General-purpose registers: Eight 8-bit registers
- Type of instruction: 81
- Data allocation: Little endian
- Multiply/divide and multiply/accumulate instructions: Supported

The RL78/G1F supports an OCD trace function.

3.2 Memory Space

Products in the RL78/G1F can access a 1 MB address space. Figures 3 - 1 and 3 - 2 show the memory maps.

Figure 3 - 1 Memory Map (R5F11BxC (x = 7, B, C, G, L))

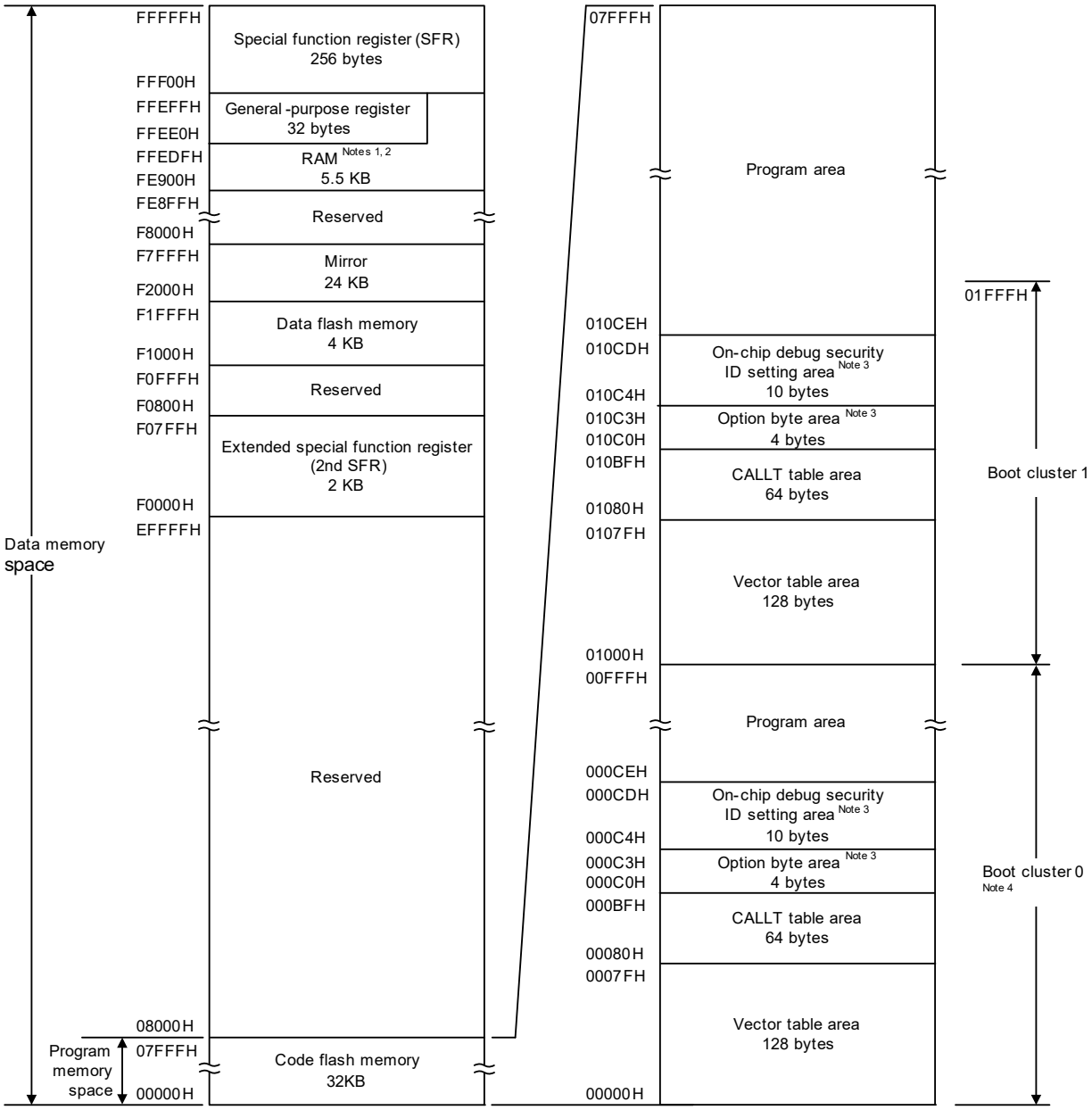

Note 1. Do not allocate RAM addresses which are used as a stack area, a data buffer, a branch destination of vector interrupt processing, and a DTC transfer destination/transfer source to the area FFE20H to FFEDFH when performing self-programming and rewriting the data flash memory. For the RAM area used by the flash library starts at FE900H. For the RAM areas used by the flash library, see Self RAM list of Flash Self-Programming Library for RL78 Family (R20UT2944).

Note 2. Instructions can be executed from the RAM area excluding the general-purpose register area.

Note 3. When boot swap is not used: Set the option bytes to 000C0H to 000C3H, and the on-chip debug security IDs to 000C4H to 000CDH.

When boot swap is used: Set the option bytes to 000C0H to 000C3H and 010C0H to 010C3H, and the on-chip debug security IDs to 000C4H to 000CDH and 010C4H to 010CDH.

Note 4. Writing boot cluster 0 can be prohibited depending on the setting of security (see **33.7 Security Settings**).

Caution 1. When the on-chip debugging trace function is in use, use of the area from FED00H to FF0FFH is prohibited.

Caution 2. While RAM parity error resets are enabled (RPERDIS = 0), be sure to initialize RAM areas where data access is to proceed and the RAM area + 10 bytes when instructions are fetched from RAM areas, respectively.
Reset signal generation sets RAM parity error resets to enabled (RPERDIS = 0). For details, see 30.3.3 RAM parity error detection function.

Figure 3 - 2 Memory Map (R5F11BxE (x = 7, B, C, G, L))

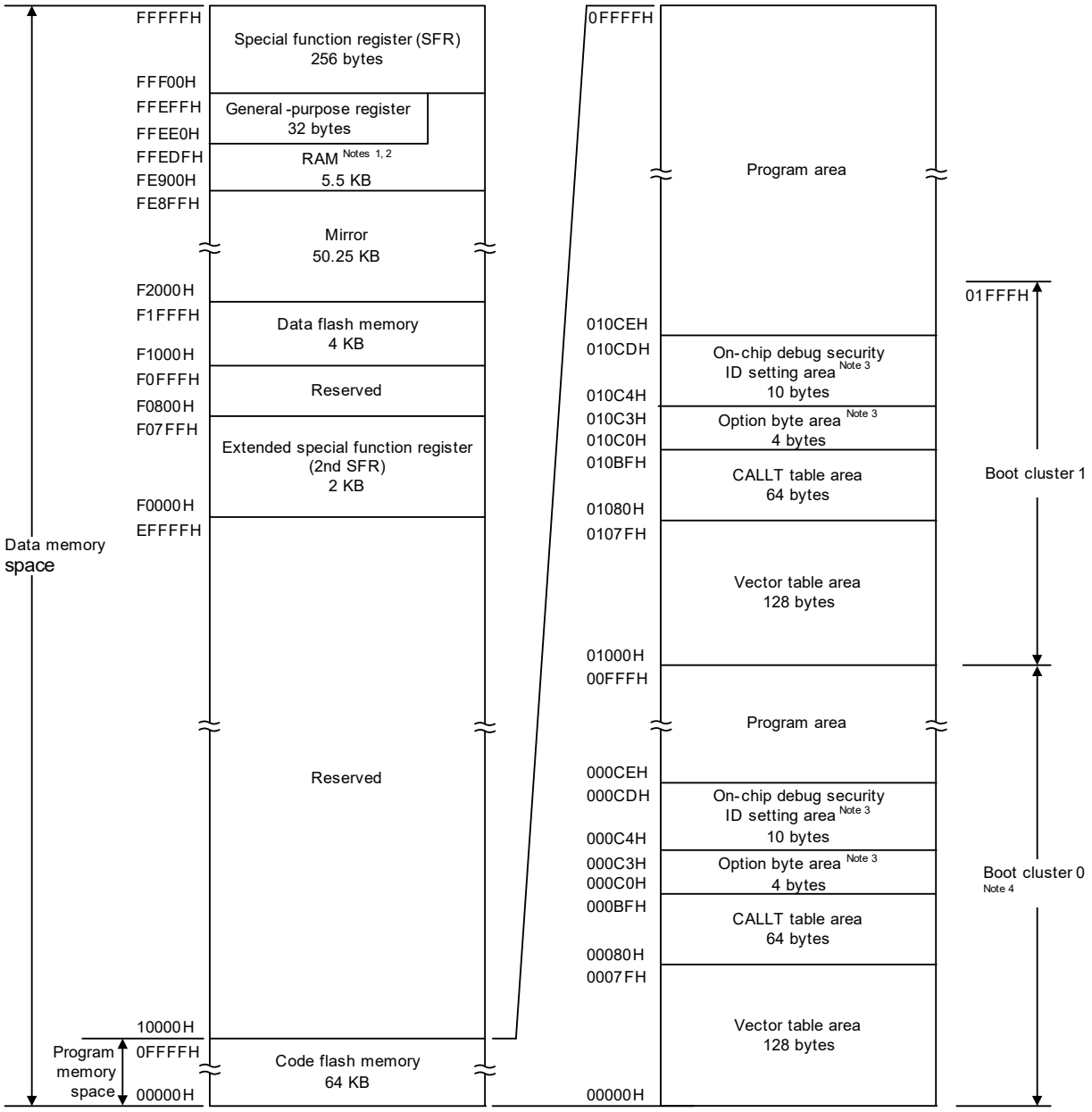

Note 1. Do not allocate RAM addresses which are used as a stack area, a data buffer, a branch destination of vector interrupt processing, and a DTC transfer destination/transfer source to the area FFE20H to FFEDFH when performing self-programming and rewriting the data flash memory. For the RAM area used by the flash library starts at FE900H. For the RAM areas used by the flash library, see Self RAM list of Flash Self-Programming Library for RL78 Family (R20UT2944).

Note 2. Instructions can be executed from the RAM area excluding the general-purpose register area.

Note 3. When boot swap is not used: Set the option bytes to 000C0H to 000C3H, and the on-chip debug security IDs to 000C4H to 000CDH.

When boot swap is used: Set the option bytes to 000C0H to 000C3H and 010C0H to 010C3H, and the on-chip debug security IDs to 000C4H to 000CDH and 010C4H to 010CDH.

Note 4. Writing boot cluster 0 can be prohibited depending on the setting of security (see **33.7 Security Settings**).

(**Cautions** and **Remark** are listed on the next page.)

Caution 1. When the on-chip debugging trace function is in use, use of the area from FED00H to FF0FFH is prohibited.

Caution 2. While RAM parity error resets are enabled (RPERDIS = 0), be sure to initialize RAM areas where data access is to proceed and the RAM area + 10 bytes when instructions are fetched from RAM areas, respectively.
Reset signal generation sets RAM parity error resets to enabled (RPERDIS = 0). For details, see 30.3.3 RAM parity error detection function.

Remark The flash memory is divided into blocks (one block = 1 KB). For the address values and block numbers, see **Table 3 - 1 Correspondence Between Address Values and Block Numbers in Flash Memory**.

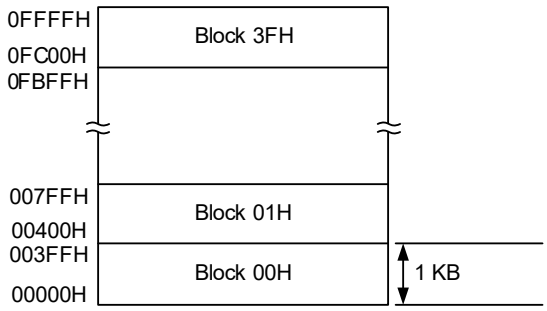

(R5F11BxE (x = 7, B, C, G, L))

Correspondence between the address values and block numbers in the flash memory are shown below.

Table 3 - 1 Correspondence Between Address Values and Block Numbers in Flash Memory

Address Value	Block Number	Block Number	Block Number
00000H to 003FFH	00H	08000H to 083FFH	20H
00400H to 007FFH	01H	08400H to 087FFH	21H
00800H to 00BFFH	02H	08800H to 08BFFH	22H
00C00H to 00FFFH	03H	08C00H to 08FFFH	23H
01000H to 0013FFH	04H	09000H to 093FFH	24H
01400H to 017FFH	05H	09400H to 097FFH	25H
01800H to 01BFFH	06H	09800H to 09BFFH	26H
01C00H to 01FFFH	07H	09C00H to 09FFFH	27H
02000H to 023FFH	08H	0A000H to 0A3FFH	28H
02400H to 027FFH	09H	0A400H to 0A7FFH	29H
02800H to 02BFFH	0AH	0A800H to 0ABFFH	2AH
02C00H to 02FFFH	0BH	0AC00H to 0AFFFH	2BH
03000H to 033FFH	0CH	0B000H to 0B3FFH	2CH
03400H to 037FFH	0DH	0B400H to 0B7FFH	2DH
03800H to 03BFFH	0EH	0B800H to 0BBFFH	2EH
03C00H to 03FFFH	0FH	0BC00H to 0BFFFH	2FH
04000H to 043FFH	10H	0C000H to 0C3FFH	30H
04400H to 047FFH	11H	0C400H to 0C7FFH	31H
04800H to 04BFFH	12H	0C800H to 0CBFFH	32H
04C00H to 04FFFH	13H	0CC00H to 0CFFFH	33H
05000H to 053FFH	14H	0D000H to 0D3FFH	34H
05400H to 057FFH	15H	0D400H to 0D7FFH	35H
05800H to 05BFFH	16H	0D800H to 0DBFFH	36H
05C00H to 05FFFH	17H	0DC00H to 0DFFFH	37H
06000H to 063FFH	18H	0E000H to 0E3FFH	38H
06400H to 067FFH	19H	0E400H to 0E7FFH	39H
06800H to 06BFFH	1AH	0E800H to 0EBFFH	3AH
06C00H to 06FFFH	1BH	0EC00H to 0EFFFH	3BH
07000H to 073FFH	1CH	0F000H to 0F3FFH	3CH
07400H to 077FFH	1DH	0F400H to 0F7FFH	3DH
07800H to 07BFFH	1EH	0F800H to 0FBFFH	3EH
07C00H to 07FFFH	1FH	0FC00H to 0FFFFH	3FH

Remark R5F11BxC (x = 7, B, C, G, L): Block numbers 00H to 1FH
R5F11BxE (x = 7, B, C, G, L): Block numbers 00H to 3FH

3.2.1 Internal program memory space

The internal program memory space stores the program and table data.

The RL78/G1F products incorporate internal ROM (flash memory), as shown below.

Table 3 - 2 Internal ROM Capacity

Part Number	Internal ROM	
	Structure	Capacity
R5F11BxC (x = 7, B, C, G, L)	Flash memory	32768 × 8 bits (00000H to 07FFFH)
R5F11BxE (x = 7, B, C, G, L)		65536 × 8 bits (00000H to 0FFFFH)

The internal program memory space is divided into the following areas.

(1) Vector table area

The 128-byte area 00000H to 0007FH is reserved as a vector table area. The program start addresses for branch upon reset or generation of each interrupt request are stored in the vector table area. Furthermore, the interrupt jump address is a 64 K address of 00000H to 0FFFFH, because the vector code is assumed to be 2 bytes.

Of the 16-bit address, the lower 8 bits are stored at even addresses and the higher 8 bits are stored at odd addresses.

To use the boot swap function, set a vector table also at 01000H to 0107FH.

Tables 3 - 3 and 3 - 4 list the vector table. “√” indicates an interrupt source which is supported. “—” indicates an interrupt source which is not supported.

Table 3 - 3 Vector Table (1/2)

Vector Table Address	Interrupt Source	64-pin	48-pin	36-pin	32-pin	24-pin
00000H	RESET, POR, LVD, WDT, TRAP, IAW, RPE	√	√	√	√	√
00004H	INTWDTI	√	√	√	√	√
00006H	INTLVI	√	√	√	√	√
00008H	INTP0	√	√	√	√	√
0000AH	INTP1	√	√	√	√	√
0000CH	INTP2	√	√	√	√	√
0000EH	INTP3	√	√	√	√	√
00010H	INTP4	√	√	√	√	√
00012H	INTP5	√	√	√	√	√
00014H	INTST2/INTCSI20/INTIIC20	√	√	√	√	√
00016H	INTSR2/INTCSI21/INTIIC21	√	√	Note 1	Note 1	Note 1
00018H	INTSRE2	√	√	√	√	√
0001EH	INTST0/INTCSI00/INTIIC00	√	√	√	√	√
00020H	INTSR0/INTCSI01/INTIIC01	√	√	Note 2	Note 2	Note 2
00022H	INTSRE0	√	√	√	√	√
	INTTM01H	√	√	√	√	√
00024H	INTST1/INTCSI10/INTIIC10	√	Note 3	Note 3	Note 3	Note 3
00026H	INTSR1/INTCSI11/INTIIC11	√	√	√	√	√
00028H	INTSRE1	√	√	√	√	√
	INTTM03H	√	√	√	√	√
0002AH	INTIICA0	√	√	√	√	√
0002CH	INTTM00	√	√	√	√	√
0002EH	INTTM01	√	√	√	√	√Note 4
00030H	INTTM02	√	√	√	√	√Note 4
00032H	INTTM03	√	√	√	√	√
00034H	INTAD	√	√	√	√	√
00036H	INTRTC	√	√	√	√	√
00038H	INTIT	√	√	√	√	√
0003AH	INTKR	√	√	—	—	—
00040H	INTTRJ0	√	√	√	√	√
0004AH	INTP6	√	√	√	√	—
0004CH	INTP7	√	—	—	√	—
0004EH	INTP8	√	√	√	√	√
00050H	INTP9	√	√	—	—	—
00052H	INTP10	√	√	√	√	√
	INTCMP0	√	√	√	√	√

Note 1. Only INTSR2 is supported.
Note 2. Only INTSR0 is supported.
Note 3. Only INTST1 is supported.
Note 4. Only interval timer function and coordination function are supported.

Table 3 - 4 Vector Table (2/2)

Vector Table Address	Interrupt Source	64-pin	48-pin	36-pin	32-pin	24-pin
00054H	INTP11	√	√	√	√	√
	INTCMP1	√	√	√	√	√
00056H	INTTRD0	√	√	√	√	√
00058H	INTTRD1	√	√	√	√	√
0005AH	INTTRG	√	√	√	√	√
0005CH	INTTRX	√	√	√	√	√
00062H	INTFL	√	√	√	√	√
0007EH	BRK	√	√	√	√	√

(2) CALLT instruction table area

The 64-byte area 00080H to 000BFH can store the subroutine entry address of a 2-byte call instruction (CALLT). Set the subroutine entry address to a value in a range of 00000H to 0FFFFH (because an address code is 2 bytes).

To use the boot swap function, set a CALLT instruction table also at 01080H to 010BFH.

(3) Option byte area

A 4-byte area of 000C0H to 000C3H can be used as an option byte area. Set the option byte at 010C0H to 010C3H when the boot swap is used. For details, see **CHAPTER 32 OPTION BYTE**.

(4) On-chip debug security ID setting area

A 10-byte area of 000C4H to 000CDH and 010C4H to 010CDH can be used as an on-chip debug security ID setting area. Set the on-chip debug security ID of 10 bytes at 000C4H to 000CDH when the boot swap is not used and at 000C4H to 000CDH and at 010C4H to 010CDH when the boot swap is used. For details, see **CHAPTER 34 ON-CHIP DEBUG FUNCTION**.

3.2.2 Mirror area

The RL78/G1F mirrors the code flash area of 00000H to 0FFFFH.

By reading data from F0000H to FFFFFH, an instruction that does not have the ES register as an operand can be used, and thus the contents of the code flash can be read with the shorter code. However, the code flash area is not mirrored to the special function register (SFR), extended special function register (2nd SFR), RAM, data flash memory, and use prohibited areas.

See **3.1 Overview** for the mirror area of each product.

The mirror area can only be read and no instruction can be fetched from this area.

The following show examples.

Example R5F11BxE (x = 7, B, C, G, L) (Flash memory: 64 KB, RAM: 5.5 KB)

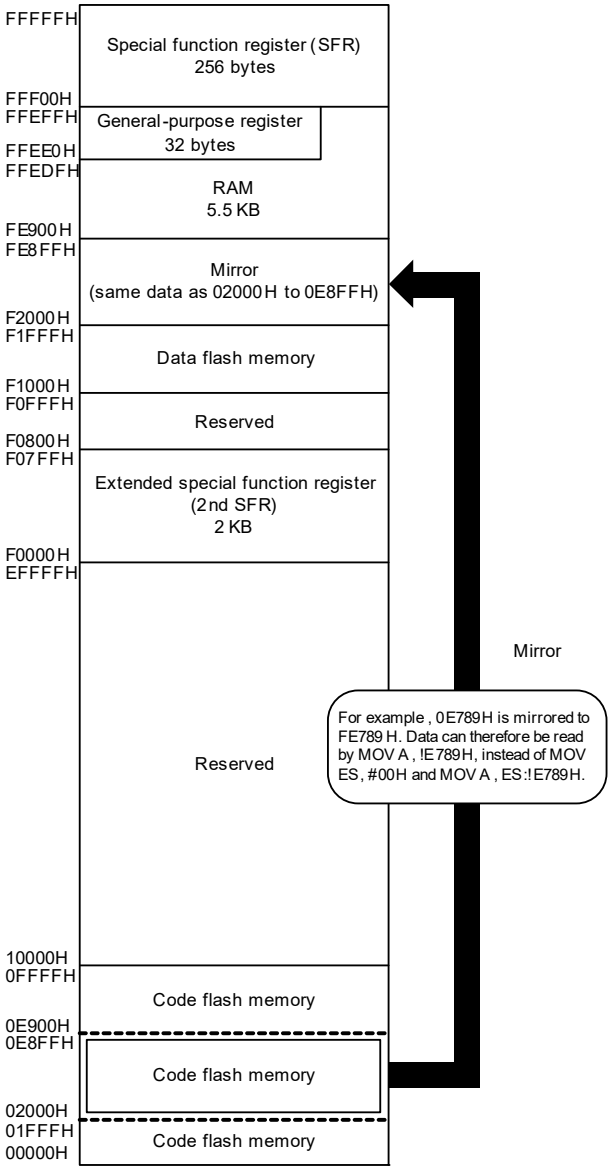

The PMC register is described below.

• Processor mode control register (PMC)
This register sets the flash memory space for mirroring to area from F0000H to FFFFFH.
The PMC register can be set by a 1-bit or 8-bit memory manipulation instruction.
Reset signal generation sets this register to 00H.

Figure 3 - 3 Format of Processor Mode Control Register (PMC)

Address: FFFFEH After reset: 00H R/W

Symbol	7	6	5	4	3	2	1	<0>
PMC	0	0	0	0	0	0	0	MAA

MAA	Selection of flash memory space for mirroring to area from F0000H to FFFFFH
0	00000H to 0FFFFH is mirrored to F0000H to FFFFFH
1	10000H to 1FFFFH is mirrored to F0000H to FFFFFH

Caution 1. Be sure to clear bit 0 (MAA) of this register to 0 (default value).
Caution 2. After setting the PMC register, wait for at least one instruction and access the mirror area.

3.2.3 Internal data memory space

The RL78/G1F products incorporate the following RAMs.

Table 3 - 5 Internal RAM Capacity

Part Number	Internal RAM
R5F11BxC (x = 7, B, C, G, L)	5632 × 8 bits (FE900H to FFEFFH)
R5F11BxE (x = 7, B, C, G, L)	5632 × 8 bits (FE900H to FFEFFH)

The internal RAM can be used as a data area and a program area where instructions are fetched (it is prohibited to use the general-purpose register area for fetching instructions). Four general-purpose register banks consisting of eight 8-bit registers per bank are assigned to the 32-byte area of FFEE0H to FFEFFH of the internal RAM area.
The internal RAM is used as stack memory.

Caution 1. It is prohibited to use the general-purpose register (FFEE0H to FFEFFH) space for fetching instructions or as a stack area.

Caution 2. Do not allocate RAM addresses which are used as a stack area, a data buffer, a branch destination of vector interrupt processing, and a DTC transfer destination/transfer source to the area FFE20H to FFEDFH when performing self-programming and rewriting the data flash memory.

Caution 3. Use of the RAM areas of the following products is prohibited when performing self-programming and rewriting the data flash memory, because these areas are used for each library.
R5F11BxC (x = 7, B, C, G, L): FE900H to FED09H
R5F11BxE (x = 7, B, C, G, L): FE900H to FED09H

Caution 4. When the on-chip debugging trace function is in use, area from FED00H to FF0FFH cannot be used as a stack memory.

3.2.4 Special function register (SFR) area

On-chip peripheral hardware special function registers (SFRs) are allocated in the area FFF00H to FFFFFH (see **Tables 3 - 6** to **3 - 9** in **3.3.4 Special function registers (SFRs)**).

Caution Do not access addresses to which SFRs are not assigned.

3.2.5 Extended special function register (2nd SFR: 2nd Special Function Register) area

On-chip peripheral hardware special function registers (2nd SFRs) are allocated in the area F0000H to F07FFH (see **Tables 3 - 10** to **3 - 17** in **3.3.5 Extended special function registers (2nd SFRs: 2nd Special Function Registers)**).

Caution 1. Do not access addresses to which extended SFRs are not assigned.

Caution 2. When accessing timer RJ counter register 0 (TRJ0) allocated in F0500H of the extended SFR (2nd SFR), the CPU does not proceed to the next instruction processing but enters the wait state for CPU processing. For this reason, if this wait state occurs, the number of instruction execution clocks is increased by the number of wait clocks. The number of wait clocks for access to timer RJ counter register 0 (TRJ0) is one clock for both writing and reading.

3.2.6 Data memory addressing

Addressing refers to the method of specifying the address of the instruction to be executed next or the address of the register or memory relevant to the execution of instructions.

Several addressing modes are provided for addressing the memory relevant to the execution of instructions for the RL78/G1F, based on operability and other considerations. For areas containing data memory in particular, special addressing methods designed for the functions of the special function registers (SFR) and general-purpose registers are available for use. Figure 3 - 4 shows correspondence between data memory and addressing. For details of each addressing, see **3.5 Addressing for Processing Data Addresses**.

Figure 3 - 4 Correspondence Between Data Memory and Addressing

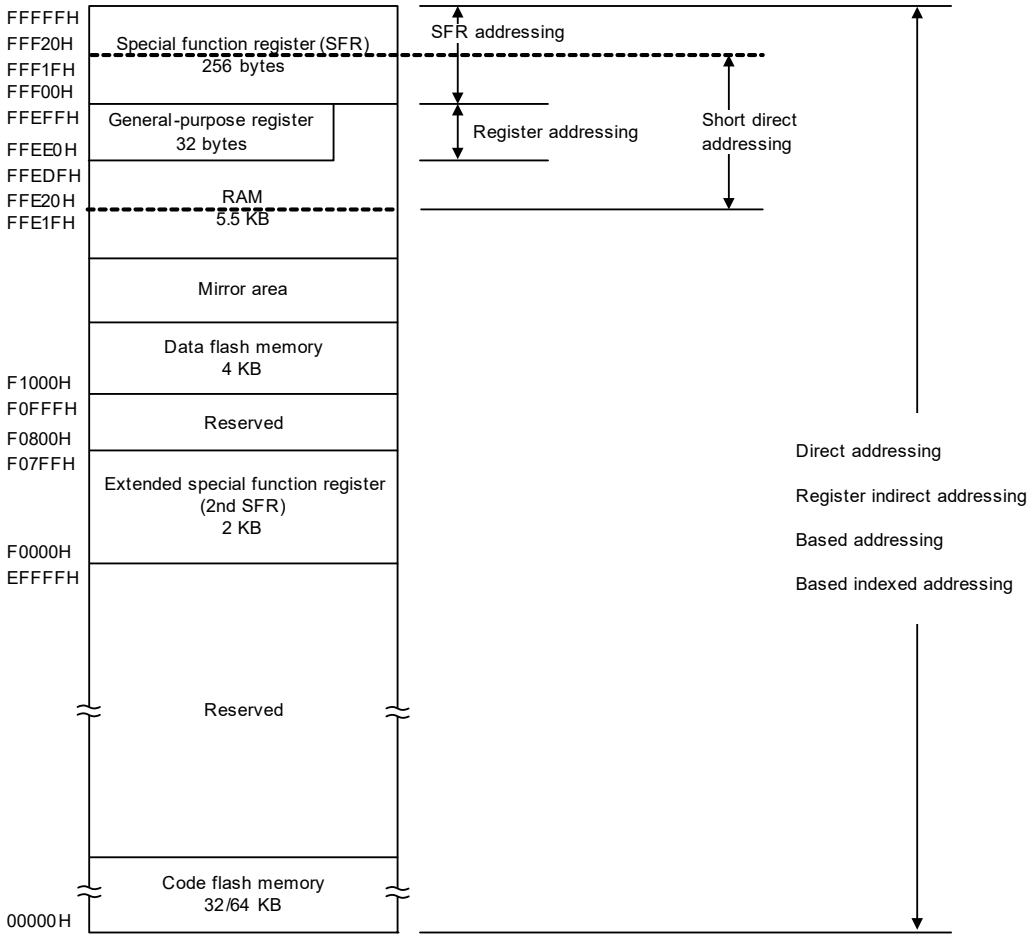

3.3 Processor Registers

The RL78/G1F products incorporate the following processor registers.

3.3.1 Control registers

The control registers control the program sequence, statuses and stack memory. The control registers consist of a program counter (PC), a program status word (PSW) and a stack pointer (SP).

(1) Program counter (PC)

The program counter is a 20-bit register that holds the address information of the next program to be executed.

In normal operation, PC is automatically incremented according to the number of bytes of the instruction to be fetched. When a branch instruction is executed, immediate data and register contents are set.

Reset signal generation sets the reset vector table values at addresses 00000H and 00001H to the program counter.

Figure 3 - 5 Format of Program Counter

	19															0
PC																

(2) Program status word (PSW)

The program status word is an 8-bit register consisting of various flags set/reset by instruction execution.

Program status word contents are stored in the stack area upon vectored interrupt request is acknowledged or PUSH PSW instruction execution and are restored upon execution of the RETB, RETI and POP PSW instructions. Reset signal generation sets the PSW register to 06H.

Figure 3 - 6 Format of Program Status Word

	7							0
PSW	IE	Z	RBS1	AC	RBS0	ISP1	ISP0	CY

(a) Interrupt enable flag (IE)

This flag controls the interrupt request acknowledge operations of the CPU.

When 0, the IE flag is set to the interrupt disabled (DI) state, and all maskable interrupt requests are disabled.

When 1, the IE flag is set to the interrupt enabled (EI) state and maskable interrupt requests acknowledgment is controlled with an in-service priority flag (ISP1, ISP0), an interrupt mask flag for various interrupt sources, and a priority specification flag.

The IE flag is reset (0) upon DI instruction execution or interrupt acknowledgment and is set (1) upon EI instruction execution.

(b) Zero flag (Z)
When the operation result is zero or equal, this flag is set (1). It is reset (0) in all other cases.

(c) Register bank select flags (RBS0, RBS1)
These are 2-bit flags to select one of the four register banks.
In these flags, the 2-bit information that indicates the register bank selected by SEL RBn instruction execution is stored.

(d) Auxiliary carry flag (AC)
If the operation result has a carry from bit 3 or a borrow at bit 3, this flag is set (1). It is reset (0) in all other cases.

(e) In-service priority flags (ISP1, ISP0)
This flag manages the priority of acknowledgeable maskable vectored interrupts. Vectored interrupt requests specified lower than the value of ISP0 and ISP1 flags by the priority specification flag registers (PRn0L, PRn0H, PRn1L, PRn1H, PRn2L, PRn2H) (see **24.3.3**) can not be acknowledged. Actual vectored interrupt requests acknowledgment is controlled by the interrupt enable flag (IE).

Remark n = 0, 1

(f) Carry flag (CY)
This flag stores overflow and underflow upon add/subtract instruction execution. It stores the shift-out value upon rotate instruction execution and functions as a bit accumulator during bit operation instruction execution.

(3) Stack pointer (SP)
This is a 16-bit register to hold the start address of the memory stack area. Only the internal RAM area can be set as the stack area.

Figure 3 - 7 Format of Stack Pointer

	15															0
SP	SP15	SP14	SP13	SP12	SP11	SP10	SP9	SP8	SP7	SP6	SP5	SP4	SP3	SP2	SP1	0

In stack addressing through a stack pointer, the SP is decremented ahead of write (save) to the stack memory and is incremented after read (restore) from the stack memory.

Caution 1. Since reset signal generation makes the SP contents undefined, be sure to initialize the SP before using the stack.

Caution 2. It is prohibited to use the general-purpose register (FFEE0H to FFEFFH) space for fetching instructions or as a stack area.

Caution 3. Do not allocate RAM addresses which are used as a stack area, a data buffer, a branch destination of vector interrupt processing, and a DTC transfer destination/transfer source to the area FFE20H to FFEDFH when performing self-programming and rewriting the data flash memory.

Caution 4. Use of the RAM areas of the following products is prohibited when performing self-programming and rewriting the data flash memory, because these areas are used for each library.
R5F11BxC (x = 7, B, C, G, L): FE900H to FED09H
R5F11BxE (x = 7, B, C, G, L): FE900H to FED09H

3.3.2 General-purpose registers

General-purpose registers are mapped at particular addresses (FFEE0H to FFEFFH) of the data memory. The general-purpose registers consists of 4 banks, each bank consisting of eight 8-bit registers (X, A, C, B, E, D, L, and H).

Each register can be used as an 8-bit register, and two 8-bit registers can also be used in a pair as a 16-bit register (AX, BC, DE, and HL).

Register banks to be used for instruction execution are set by the CPU control instruction (SEL RBn). Because of the 4-register bank configuration, an efficient program can be created by switching between a register for normal processing and a register for interrupt processing for each bank.

Caution It is prohibited to use the general-purpose register (FFEE0H to FFEFFH) space for fetching instructions or as a stack area.

Figure 3 - 8 Configuration of General-Purpose Registers

(a) Function name

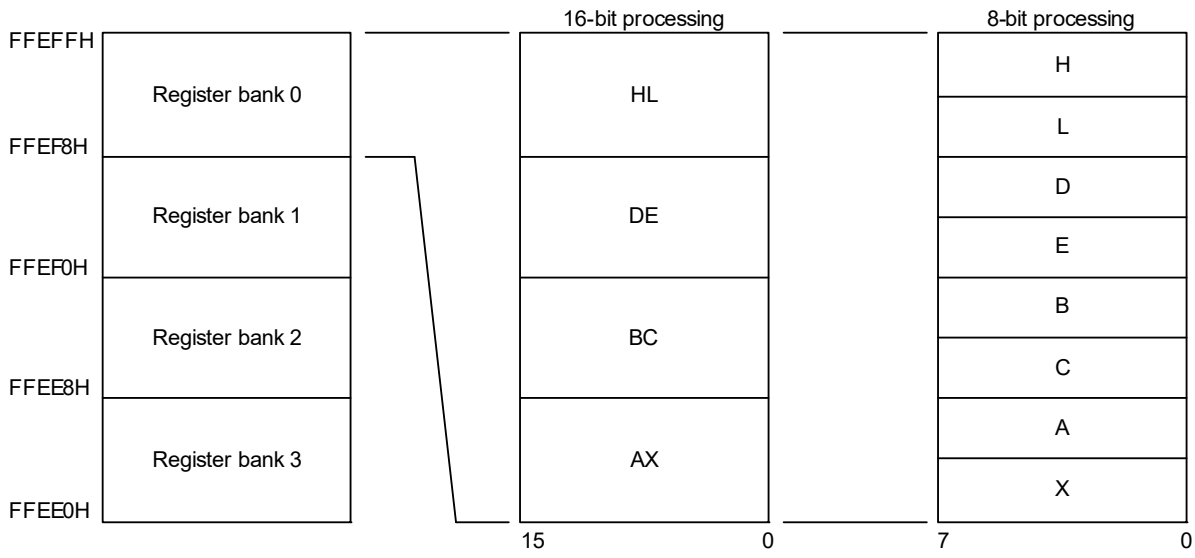

3.3.3 ES and CS registers

The ES register and CS register are used to specify the higher address for data access and when a branch instruction is executed (register direct addressing), respectively.
The default value of the ES register after reset is 0FH, and that of the CS register is 00H.

Figure 3 - 9 Configuration of ES and CS Registers

	7	6	5	4	3	2	1	0
ES	0	0	0	0	ES3	ES2	ES1	ES0

	7	6	5	4	3	2	1	0
CS	0	0	0	0	CS3	CS2	CS1	CS0

Though the data area which can be accessed with 16-bit addresses is the 64 Kbytes from F0000H to FFFFFH, using the ES register as well extends this to the 1 Mbyte from 00000H to FFFFFH.

Figure 3 - 10 Extension of Data Area Which Can Be Accessed

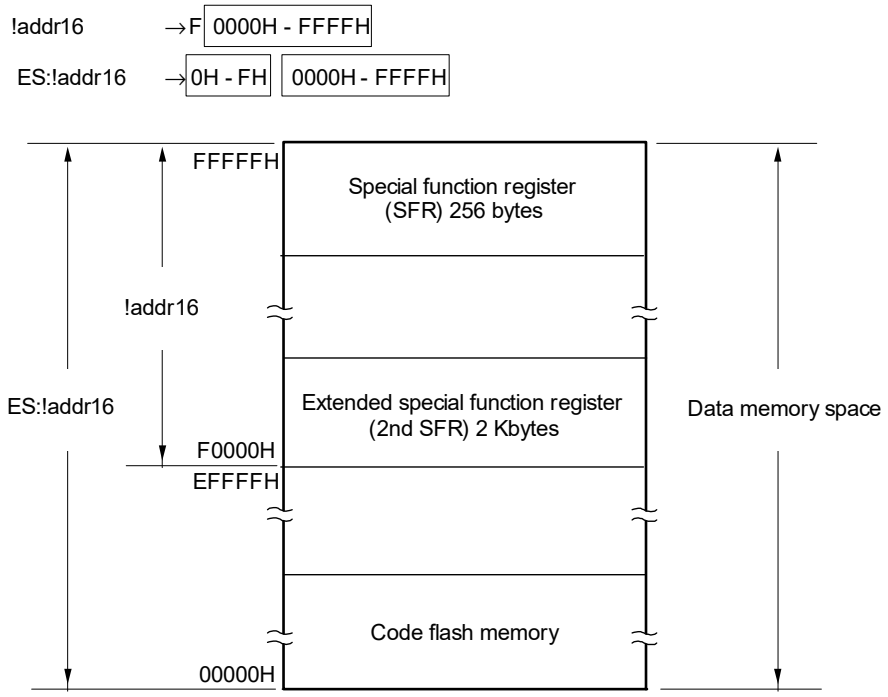

3.3.4 Special function registers (SFRs)

Unlike a general-purpose register, each SFR has a special function.
SFRs are allocated to the FFF00H to FFFFFH area.
SFRs can be manipulated like general-purpose registers, using operation, transfer, and bit manipulation instructions. The manipulable bit units, 1, 8, and 16, depend on the SFR type.
Each manipulation bit unit can be specified as follows.

- 1-bit manipulation
  Describe as follows for the 1-bit manipulation instruction operand (sfr.bit).
  When the bit name is defined: <Bit name>
  When the bit name is not defined: <Register name>, <Bit number> or <Address>, <Bit number>
- 8-bit manipulation
  Describe the symbol defined by the assembler for the 8-bit manipulation instruction operand (sfr). This manipulation can also be specified with an address.
- 16-bit manipulation
  Describe the symbol defined by the assembler for the 16-bit manipulation instruction operand (sfrp). When specifying an address, describe an even address.

Tables 3 - 6 to 3 - 9 give lists of the SFRs. The meanings of items in the table are as follows.

- Symbol
  This item indicates the address of a special function register. It is a reserved word in the assembler, and is defined as an sfr variable using the #pragma sfr directive in the compiler. When using the assembler, debugger, and simulator, symbols can be written as an instruction operand.
- R/W
  This item indicates whether the corresponding SFR can be read or written.
  R/W: Read/write enable
  R: Read only
  W: Write only
- Manipulable bit units
  "√" indicates the manipulable bit unit (1, 8, or 16). "—" indicates a bit unit for which manipulation is not possible.
- After reset
  This item indicates each register status upon reset signal generation.

Caution **Do not access addresses to which SFRs are not assigned.**

Remark For extended SFRs (2nd SFRs), see **3.3.5 Extended special function registers (2nd SFRs: 2nd Special Function Registers)**.

Table 3 - 6 Special Function Register (SFR) List (1/4)

Address	Special Function Register (SFR) Name	Symbol		R/W	Manipulable Bit Range			After Reset
					1-bit	8-bit	16-bit	
FFF00H	Port register 0	P0		R/W	√	√	—	00H
FFF01H	Port register 1	P1		R/W	√	√	—	00H
FFF02H	Port register 2	P2		R/W	√	√	—	00H
FFF03H	Port register 3	P3		R/W	√	√	—	00H
FFF04H	Port register 4	P4		R/W	√	√	—	00H
FFF05H	Port register 5	P5		R/W	√	√	—	00H
FFF06H	Port register 6	P6		R/W	√	√	—	00H
FFF07H	Port register 7	P7		R/W	√	√	—	00H
FFF0CH	Port register 12	P12		R/W	√	√	—	Undefined
FFF0DH	Port register 13	P13		R/W	√	√	—	Undefined
FFF0EH	Port register 14	P14		R/W	√	√	—	00H
FFF10H	Serial data register 00	TXD0/ SIO00	SDR00	R/W	—	√	√	0000H
FFF11H		—			—	—		
FFF12H	Serial data register 01	RXD0/ SIO01	SDR01	R/W	—	√	√	0000H
FFF13H		—			—	—		
FFF18H	Timer data register 00	TDR00		R/W	—	—	√	0000H
FFF19H								
FFF1AH	Timer data register 01	TDR01L	TDR01	R/W	—	√	√	00H
FFF1BH		TDR01H			—	√		00H
FFF1EH	10-bit A/D conversion result register	ADCR		R	—	—	√	0000H
FFF1FH	8-bit A/D conversion result register	ADCRH		R	—	√	—	00H
FFF20H	Port mode register 0	PM0		R/W	√	√	—	FFH
FFF21H	Port mode register 1	PM1		R/W	√	√	—	FFH
FFF22H	Port mode register 2	PM2		R/W	√	√	—	FFH
FFF23H	Port mode register 3	PM3		R/W	√	√	—	FFH
FFF24H	Port mode register 4	PM4		R/W	√	√	—	FFH
FFF25H	Port mode register 5	PM5		R/W	√	√	—	FFH
FFF26H	Port mode register 6	PM6		R/W	√	√	—	FFH
FFF27H	Port mode register 7	PM7		R/W	√	√	—	FFH
FFF2CH	Port mode register 12	PM12		R/W	√	√	—	FFH
FFF2EH	Port mode register 14	PM14		R/W	√	√	—	FFH
FFF30H	A/D converter mode register 0	ADM0		R/W	√	√	—	00H
FFF31H	Analog input channel specification register	ADS		R/W	√	√	—	00H
FFF32H	A/D converter mode register 1	ADM1		R/W	√	√	—	00H
FFF34H	D/A conversion value setting register 0	DACS0		R/W	—	√	—	00H
FFF35H	D/A conversion value setting register 1	DACS1		R/W	—	√	—	00H
FFF36H	D/A converter mode register	DAM		R/W	√	√	—	00H

Table 3 - 7 Special Function Register (SFR) List (2/4)

Address	Special Function Register (SFR) Name	Symbol		R/W	Manipulable Bit Range			After Reset
					1-bit	8-bit	16-bit	
FFF37H	Key return mode register	KRM		R/W	√	√	—	00H
FFF38H	External interrupt rising edge enable register 0	EGP0		R/W	√	√	—	00H
FFF39H	External interrupt falling edge enable register 0	EGN0		R/W	√	√	—	00H
FFF3AH	External interrupt rising edge enable register 1	EGP1		R/W	√	√	—	00H
FFF3BH	External interrupt falling edge enable register 1	EGN1		R/W	√	√	—	00H
FFF44H	Serial data register 02	TXD1/ SIO10	SDR02	R/W	—	√	√	0000H
FFF45H		—			—	—		
FFF46H	Serial data register 03	RXD1/ SIO11	SDR03	R/W	—	√	√	0000H
FFF47H		—			—	—		
FFF48H	Serial data register 10	TXD2/ SIO20	SDR10	R/W	—	√	√	0000H
FFF49H		—			—	—		
FFF4AH	Serial data register 11	RXD2/ SIO21	SDR11	R/W	—	√	√	0000H
FFF4BH		—			—	—		
FFF50H	IICA shift register 0	IICA0		R/W	—	√	—	00H
FFF51H	IICA status register 0	IICS0		R	√	√	—	00H
FFF52H	IICA flag register 0	IICF0		R/W	√	√	—	00H
FFF58H	Timer RD general register C0	TRDGRC0		R/W	—	—	√	FFFFH[Note]
FFF59H								
FFF5AH	Timer RD general register D0	TRDGRD0		R/W	—	—	√	FFFFH[Note]
FFF5BH								
FFF5CH	Timer RD general register C1	TRDGRC1		R/W	—	—	√	FFFFH[Note]
FFF5DH								
FFF5EH	Timer RD general register D1	TRDGRD1		R/W	—	—	√	FFFFH[Note]
FFF5FH								
FFF60H	Timer RD general register C	TRGGRC		R/W	—	—	√	FFFFH
FFF61H								
FFF62H	Timer RD general register D	TRGGRD		R/W	—	—	√	FFFFH
FFF63H								

Note The timer RD SFRs are undefined when FRQSEL4 = 1 in the user option byte (000C2H) and TRD0EN = 0 in the PER1 register. If it is necessary to read the initial value, set f_{CLK} to f_{IH} and TRD0EN = 1 before reading.

Table 3 - 8 Special Function Register (SFR) List (3/4)

Address	Special Function Register (SFR) Name	Symbol		R/W	Manipulable Bit Range			After Reset
					1-bit	8-bit	16-bit	
FFF64H	Timer data register 02	TDR02		R/W	—	—	√	0000H
FFF65H								
FFF66H	Timer data register 03	TDR03L	TDR03	R/W	—	√	√	00H
FFF67H		TDR03H			—	√		00H
FFF90H	12-bit interval timer control register	ITMC		R/W	—	—	√	0FFFH
FFF91H								
FFF92H	Second count register	SEC		R/W	—	√	—	00H
FFF93H	Minute count register	MIN		R/W	—	√	—	00H
FFF94H	Hour count register	HOUR		R/W	—	√	—	12H[Note]
FFF95H	Week count register	WEEK		R/W	—	√	—	00H
FFF96H	Day count register	DAY		R/W	—	√	—	01H
FFF97H	Month count register	MONTH		R/W	—	√	—	01H
FFF98H	Year count register	YEAR		R/W	—	√	—	00H
FFF99H	Watch error correction register	SUBCUD		R/W	—	√	—	00H
FFF9AH	Alarm minute register	ALARMWM		R/W	—	√	—	00H
FFF9BH	Alarm hour register	ALARMWH		R/W	—	√	—	12H
FFF9CH	Alarm week register	ALARMWW		R/W	—	√	—	00H
FFF9DH	Real-time clock control register 0	RTCC0		R/W	√	√	—	00H
FFF9EH	Real-time clock control register 1	RTCC1		R/W	√	√	—	00H
FFFA0H	Clock operation mode control register	CMC		R/W	—	√	—	00H
FFFA1H	Clock operation status control register	CSC		R/W	√	√	—	C0H
FFFA2H	Oscillation stabilization time counter status register	OSTC		R	√	√	—	00H
FFFA3H	Oscillation stabilization time select register	OSTS		R/W	—	√	—	07H
FFFA4H	System clock control register	CKC		R/W	√	√	—	00H
FFFA5H	Clock output select register 0	CKS0		R/W	√	√	—	00H
FFFA6H	Clock output select register 1	CKS1		R/W	√	√	—	00H

Note The value of this register is 00H if the AMPM bit (bit 3 of real-time clock control register 0 (RTCC0)) is set to 1 after reset.

Table 3 - 9 Special Function Register (SFR) List (4/4)

Address	Special Function Register (SFR) Name	Symbol		R/W	Manipulable Bit Range			After Reset
					1-bit	8-bit	16-bit	
FFFA8H	Reset control flag register	RESF		R	—	√	—	Undefined[Note 1]
FFFA9H	Voltage detection register	LVIM		R/W	√	√	—	00H[Note 1]
FFFAAH	Voltage detection level register	LVIS		R/W	√	√	—	00H/01H/81H[Note 1]
FFFABH	Watchdog timer enable register	WDTE		R/W	—	√	—	9AH/1AH[Note 2]
FFFACH	CRC input register	CRCIN		R/W	—	√	—	00H
FFFD0H	Interrupt request flag register 2L	IF2L	IF2	R/W	√	√	√	00H
FFFD1H	Interrupt request flag register 2H	IF2H		R/W	√	√		00H
FFFD4H	Interrupt mask flag register 2L	MK2L	MK2	R/W	√	√	√	FFH
FFFD5H	Interrupt mask flag register 2H	MK2H		R/W	√	√		FFH
FFFD8H	Priority specification flag register 02L	PR02L	PR02	R/W	√	√	√	FFH
FFFD9H	Priority specification flag register 02H	PR02H		R/W	√	√		FFH
FFFDCH	Priority specification flag register 12L	PR12L	PR12	R/W	√	√	√	FFH
FFFDDH	Priority specification flag register 12H	PR12H		R/W	√	√		FFH
FFFE0H	Interrupt request flag register 0L	IF0L	IF0	R/W	√	√	√	00H
FFFE1H	Interrupt request flag register 0H	IF0H		R/W	√	√		00H
FFFE2H	Interrupt request flag register 1L	IF1L	IF1	R/W	√	√	√	00H
FFFE3H	Interrupt request flag register 1H	IF1H		R/W	√	√		00H
FFFE4H	Interrupt mask flag register 0	MK0L	MK0	R/W	√	√	√	FFH
FFFE5H		MK0H		R/W	√	√		FFH
FFFE6H	Interrupt mask flag register 1	MK1L	MK1	R/W	√	√	√	FFH
FFFE7H		MK1H		R/W	√	√		FFH
FFFE8H	Priority specification flag register 00	PR00L	PR00	R/W	√	√	√	FFH
FFFE9H		PR00H		R/W	√	√		FFH
FFFEAH	Priority specification flag register 01	PR01L	PR01	R/W	√	√	√	FFH
FFFEBH		PR01H		R/W	√	√		FFH
FFFECH	Priority specification flag register 10	PR10L	PR10	R/W	√	√	√	FFH
FFFEDH		PR10H		R/W	√	√		FFH
FFFEEH	Priority specification flag register 11	PR11L	PR11	R/W	√	√	√	FFH
FFFEFH		PR11H		R/W	√	√		FFH
FFFF0H	Multiply and accumulation register (L)	MACRL		R/W	—	—	√	0000H
FFFF1H								
FFFF2H	Multiply and accumulation register (H)	MACRH		R/W	—	—	√	0000H
FFFF3H								
FFFFEH	Processor mode control register	PMC		R/W	√	√	—	00H

Note 1. These values vary depending on the reset source.

Register \ Reset Source		$\overline{\text{RESET}}$ Input	Reset by POR	Reset by Execution of Illegal Instruction	Reset by WDT	Reset by RAM parity error	Reset by illegal-memory access	Reset by LVD
RESF	TRAP	Cleared (0)		Set (1)	Held			Held
	WDTRF			Held	Set (1)	Held		
	RPERF			Held		Set (1)	Held	
	IAWRF			Held			Set (1)	
	LVIRF			Held				Set (1)
LVIM	LVISEN	Cleared (0)						Held
	LVIOMSK	Held						
	LVIF							
LVIS		Cleared (00H/01H/81H)						

Note 2. The reset value of the WDTE register is determined by the setting of the option byte.

Remark For extended SFRs (2nd SFRs), see **Tables 3 - 10** to **3 - 17 Extended Special Function Register (2nd SFR) List**.

3.3.5 Extended special function registers (2nd SFRs: 2nd Special Function Registers)

Unlike a general-purpose register, each extended SFR (2nd SFR) has a special function.
Extended SFRs are allocated to the F0000H to F07FFH area. SFRs other than those in the SFR area (FFF00H to FFFFFH) are allocated to this area. An instruction that accesses the extended SFR area, however, is 1 byte longer than an instruction that accesses the SFR area.
Extended SFRs can be manipulated like general-purpose registers, using operation, transfer, and bit manipulation instructions. The manipulable bit units, 1, 8, and 16, depend on the SFR type.
Each manipulation bit unit can be specified as follows.

- 1-bit manipulation
  Describe as follows for the 1-bit manipulation instruction operand (!addr16.bit)
  When the bit name is defined: <Bit name>
  When the bit name is not defined: <Register name>, <Bit number> or <Address>, <Bit number>
- 8-bit manipulation
  Describe the symbol defined by the assembler for the 8-bit manipulation instruction operand (!addr16). This manipulation can also be specified with an address.
- 16-bit manipulation
  Describe the symbol defined by the assembler for the 16-bit manipulation instruction operand (!addr16). When specifying an address, describe an even address.

Tables 3 - 10 to 3 - 17 give lists of the extended SFRs. The meanings of items in the table are as follows.

- Symbol
  This item indicates the address of an extended SFR. It is a reserved word in the assembler, and is defined as an sfr variable using the #pragma sfr directive in the compiler. When using the assembler, debugger, and simulator, symbols can be written as an instruction operand.
- R/W
  This item indicates whether the corresponding extended SFR can be read or written.
  R/W:Read/write enable
  R:Read only
  W:Write only
- Manipulable bit units
  "√" indicates the manipulable bit unit (1, 8, or 16). "—" indicates a bit unit for which manipulation is not possible.
- After reset
  This item indicates each register status upon reset signal generation.

Caution **Do not access addresses to which extended SFRs are not assigned.**

Remark For SFRs in the SFR area, see **3.3.4 Special function registers (SFRs)**.

Table 3 - 10 Extended Special Function Register (2nd SFR) List (1/8)

Address	Extended Special Function Register (2nd SFR) Name	Symbol	R/W	Manipulable Bit Range			After Reset
				1-bit	8-bit	16-bit	
F0010H	A/D converter mode register 2	ADM2	R/W	√	√	—	00H
F0011H	Conversion result comparison upper limit setting register	ADUL	R/W	—	√	—	FFH
F0012H	Conversion result comparison lower limit setting register	ADLL	R/W	—	√	—	00H
F0013H	A/D test register	ADTES	R/W	—	√	—	00H
F0030H	Pull-up resistor option register 0	PU0	R/W	√	√	—	00H
F0031H	Pull-up resistor option register 1	PU1	R/W	√	√	—	00H
F0033H	Pull-up resistor option register 3	PU3	R/W	√	√	—	00H
F0034H	Pull-up resistor option register 4	PU4	R/W	√	√	—	01H
F0035H	Pull-up resistor option register 5	PU5	R/W	√	√	—	00H
F0037H	Pull-up resistor option register 7	PU7	R/W	√	√	—	00H
F003CH	Pull-up resistor option register 12	PU12	R/W	√	√	—	00H
F003EH	Pull-up resistor option register 14	PU14	R/W	√	√	—	00H
F0040H	Port input mode register 0	PIM0	R/W	√	√	—	00H
F0041H	Port input mode register 1	PIM1	R/W	√	√	—	00H
F0043H	Port input mode register 3	PIM3	R/W	√	√	—	00H
F0045H	Port input mode register 5	PIM5	R/W	√	√	—	00H
F0047H	Port input mode register 7	PIM7	R/W	√	√	—	00H
F0050H	Port output mode register 0	POM0	R/W	√	√	—	00H
F0051H	Port output mode register 1	POM1	R/W	√	√	—	00H
F0053H	Port output mode register 3	POM3	R/W	√	√	—	00H
F0055H	Port output mode register 5	POM5	R/W	√	√	—	00H
F0057H	Port output mode register 7	POM7	R/W	√	√	—	00H
F0060H	Port mode control register 0	PMC0	R/W	√	√	—	FFH
F0061H	Port mode control register 1	PMC1	R/W	√	√	—	FFH
F0062H	Port mode control register 2	PMC2	R/W	√	√	—	FFH
F006CH	Port mode control register 12	PMC12	R/W	√	√	—	FFH
F006EH	Port mode control register 14	PMC14	R/W	√	√	—	FFH
F0070H	Noise filter enable register 0	NFEN0	R/W	√	√	—	00H
F0071H	Noise filter enable register 1	NFEN1	R/W	√	√	—	00H
F0073H	Input switch control register	ISC	R/W	√	√	—	00H
F0074H	Timer I/O select register 0	TIOS0	R/W	—	√	—	00H
F0075H	Peripheral I/O redirection register 2	PIOR2	R/W	—	√	—	00H
F0077H	Peripheral I/O redirection register 0	PIOR0	R/W	—	√	—	00H
F0078H	Invalid memory access detection control register	IAWCTL	R/W	—	√	—	00H
F0079H	Peripheral I/O redirection register 1	PIOR1	R/W	—	√	—	00H
F007AH	Peripheral enable register 1	PER1	R/W	√	√	—	00H

Table 3 - 11 Extended Special Function Register (2nd SFR) List (2/8)

Address	Extended Special Function Register (2nd SFR) Name	Symbol		R/W	Manipulable Bit Range			After Reset
					1-bit	8-bit	16-bit	
F007BH	Port mode select register	PMS		R/W	√	√	—	00H
F007CH	Peripheral I/O redirection register 3	PIOR3		R/W	—	√	—	00H
F007DH	Global digital input disable register	GDIDIS		R/W	√	√	—	00H
F0090H	Data flash control register	DFLCTL		R/W	√	√	—	00H
F00A0H	High-speed on-chip oscillator trimming register	HIOTRM		R/W	—	√	—	Undefined Note 1
F00A8H	High-speed on-chip oscillator frequency select register	HOCODIV		R/W	—	√	—	Undefined Note 2
F00F0H	Peripheral enable register 0	PER0		R/W	√	√	—	00H
F00F3H	Subsystem clock supply mode control register	OSMC		R/W	—	√	—	00H
F00F5H	RAM parity error control register	RPECTL		R/W	√	√	—	00H
F00FEH	BCD correction result register	BCDADJ		R	—	√	—	Undefined
F0100H	Serial status register 00	SSR00L	SSR00	R	—	√	√	0000H
F0101H		—			—	—		
F0102H	Serial status register 01	SSR01L	SSR01	R	—	√	√	0000H
F0103H		—			—	—		
F0104H	Serial status register 02	SSR02L	SSR02	R	—	√	√	0000H
F0105H		—			—	—		
F0106H	Serial status register 03	SSR03L	SSR03	R	—	√	√	0000H
F0107H		—			—	—		
F0108H	Serial flag clear trigger register 00	SIR00L	SIR00	R/W	—	√	√	0000H
F0109H		—			—	—		
F010AH	Serial flag clear trigger register 01	SIR01L	SIR01	R/W	—	√	√	0000H
F010BH		—			—	—		
F010CH	Serial flag clear trigger register 02	SIR02L	SIR02	R/W	—	√	√	0000H
F010DH		—			—	—		
F010EH	Serial flag clear trigger register 03	SIR03L	SIR03	R/W	—	√	√	0000H
F010FH		—			—	—		
F0110H	Serial mode register 00	SMR00		R/W	—	—	√	0020H
F0111H								
F0112H	Serial mode register 01	SMR01		R/W	—	—	√	0020H
F0113H								
F0114H	Serial mode register 02	SMR02		R/W	—	—	√	0020H
F0115H								
F0116H	Serial mode register 03	SMR03		R/W	—	—	√	0020H
F0117H								

Note 1. The value after a reset is adjusted at the time of shipment.

Note 2. The value after a reset is a value set in FRQSEL2 to FRQSEL0 of the option byte (000C2H).

Table 3 - 12 Extended Special Function Register (2nd SFR) List (3/8)

Address	Extended Special Function Register (2nd SFR) Name	Symbol		R/W	Manipulable Bit Range			After Reset
					1-bit	8-bit	16-bit	
F0118H	Serial communication operation setting register 00	SCR00		R/W	—	—	√	0087H
F0119H								
F011AH	Serial communication operation setting register 01	SCR01		R/W	—	—	√	0087H
F011BH								
F011CH	Serial communication operation setting register 02	SCR02		R/W	—	—	√	0087H
F011DH								
F011EH	Serial communication operation setting register 03	SCR03		R/W	—	—	√	0087H
F011FH								
F0120H	Serial channel enable status register 0	SE0L	SE0	R	√	√	√	0000H
F0121H		—			—	—		
F0122H	Serial channel start register 0	SS0L	SS0	R/W	√	√	√	0000H
F0123H		—			—	—		
F0124H	Serial channel stop register 0	ST0L	ST0	R/W	√	√	√	0000H
F0125H		—			—	—		
F0126H	Serial clock select register 0	SPS0L	SPS0	R/W	—	√	√	0000H
F0127H		—			—	—		
F0128H	Serial output register 0	SO0		R/W	—	—	√	0F0FH
F0129H								
F012AH	Serial output enable register 0	SOE0L	SOE0	R/W	√	√	√	0000H
F012BH		—			—	—		
F0134H	Serial output level register 0	SOL0L	SOL0	R/W	—	√	√	0000H
F0135H		—			—	—		
F0138H	Serial standby control register 0	SSC0L	SSC0	R/W	—	√	√	0000H
F0139H		—			—	—		
F0140H	Serial status register 10	SSR10L	SSR10	R	—	√	√	0000H
F0141H		—			—	—		
F0142H	Serial status register 11	SSR11L	SSR11	R	—	√	√	0000H
F0143H		—			—	—		
F0148H	Serial flag clear trigger register 10	SIR10L	SIR10	R/W	—	√	√	0000H
F0149H		—			—	—		
F014AH	Serial flag clear trigger register 11	SIR11L	SIR11	R/W	—	√	√	0000H
F014BH		—			—	—		
F0150H	Serial mode register 10	SMR10		R/W	—	—	√	0020H
F0151H								
F0152H	Serial mode register 11	SMR11		R/W	—	—	√	0020H
F0153H								
F0158H	Serial communication operation setting register 10	SCR10		R/W	—	—	√	0087H
F0159H								
F015AH	Serial communication operation setting register 11	SCR11		R/W	—	—	√	0087H
F015BH								

Table 3 - 13 Extended Special Function Register (2nd SFR) List (4/8)

Address	Extended Special Function Register (2nd SFR) Name	Symbol		R/W	Manipulable Bit Range			After Reset
					1-bit	8-bit	16-bit	
F0160H	Serial channel enable status register 1	SE1L	SE1	R	√	√	√	0000H
F0161H		—			—	—		
F0162H	Serial channel start register 1	SS1L	SS1	R/W	√	√	√	0000H
F0163H		—			—	—		
F0164H	Serial channel stop register 1	ST1L	ST1	R/W	√	√	√	0000H
F0165H		—			—	—		
F0166H	Serial clock select register 1	SPS1L	SPS1	R/W	—	√	√	0000H
F0167H		—			—	—		
F0168H	Serial output register 1	SO1		R/W	—	—	√	0F0FH
F0169H								
F016AH	Serial output enable register 1	SOE1L	SOE1	R/W	√	√	√	0000H
F016BH		—			—	—		
F0174H	Serial output level register 1	SOL1L	SOL1	R/W	—	√	√	0000H
F0175H		—			—	—		
F0180H	Timer counter register 00	TCR00		R	—	—	√	FFFFH
F0181H								
F0182H	Timer counter register 01	TCR01		R	—	—	√	FFFFH
F0183H								
F0184H	Timer counter register 02	TCR02		R	—	—	√	FFFFH
F0185H								
F0186H	Timer counter register 03	TCR03		R	—	—	√	FFFFH
F0187H								
F0190H	Timer mode register 00	TMR00		R/W	—	—	√	0000H
F0191H								
F0192H	Timer mode register 01	TMR01		R/W	—	—	√	0000H
F0193H								
F0194H	Timer mode register 02	TMR02		R/W	—	—	√	0000H
F0195H								
F0196H	Timer mode register 03	TMR03		R/W	—	—	√	0000H
F0197H								
F01A0H	Timer status register 00	TSR00L	TSR00	R	—	√	√	0000H
F01A1H		—			—	—		
F01A2H	Timer status register 01	TSR01L	TSR01	R	—	√	√	0000H
F01A3H		—			—	—		
F01A4H	Timer status register 02	TSR02L	TSR02	R	—	√	√	0000H
F01A5H		—			—	—		
F01A6H	Timer status register 03	TSR03L	TSR03	R	—	√	√	0000H
F01A7H		—			—	—		
F01B0H	Timer channel enable status register 0	TE0L	TE0	R	√	√	√	0000H
F01B1H		—			—	—		

Table 3 - 14 Extended Special Function Register (2nd SFR) List (5/8)

Address	Extended Special Function Register (2nd SFR) Name	Symbol		R/W	Manipulable Bit Range			After Reset
					1-bit	8-bit	16-bit	
F01B2H	Timer channel start register 0	TS0L	TS0	R/W	√	√	√	0000H
F01B3H		—			—	—		
F01B4H	Timer channel stop register 0	TT0L	TT0	R/W	√	√	√	0000H
F01B5H		—			—	—		
F01B6H	Timer clock select register 0	TPS0		R/W	—	—	√	0000H
F01B7H								
F01B8H	Timer output register 0	TO0L	TO0	R/W	—	√	√	0000H
F01B9H		—			—	—		
F01BAH	Timer output enable register 0	TOE0L	TOE0	R/W	√	√	√	0000H
F01BBH		—			—	—		
F01BCH	Timer output level register 0	TOL0L	TOL0	R/W	—	√	√	0000H
F01BDH		—			—	—		
F01BEH	Timer output mode register 0	TOM0L	TOM0	R/W	—	√	√	0000H
F01BFH		—			—	—		
F0230H	IICA control register 00	IICCTL00		R/W	√	√	—	00H
F0231H	IICA control register 01	IICCTL01		R/W	√	√	—	00H
F0232H	IICA low-level width setting register 0	IICWL0		R/W	—	√	—	FFH
F0233H	IICA high-level width setting register 0	IICWH0		R/W	—	√	—	FFH
F0234H	Slave address register 0	SVA0		R/W	—	√	—	00H
F0240H	Timer RJ control register 0	TRJCR0		R/W	—	√	—	00H
F0241H	Timer RJ I/O control register 0	TRJIOC0		R/W	√	√	—	00H
F0242H	Timer RJ mode register 0	TRJMR0		R/W	√	√	—	00H
F0243H	Timer RJ event pin select register 0	TRJISR0		R/W	√	√	—	00H
F0250H	Timer RG mode register	TRGMR		R/W	√	√	—	00H
F0251H	Timer RG count control register	TRGCNTC		R/W	√	√	—	00H
F0252H	Timer RG control register	TRGCR		R/W	√	√	—	00H
F0253H	Timer RG interrupt enable register	TRGIER		R/W	√	√	—	00H
F0254H	Timer RG status register	TRGSR		R/W	√	√	—	00H
F0255H	Timer RG I/O control register	TRGIOR		R/W	√	√	—	00H
F0256H	Timer RG counter	TRG		RW	—	—	√	0000H
F0257H								
F0258H	Timer RG general register A	TRGGRA		RW	—	—	√	FFFFH
F0259H								
F025AH	Timer RG general register B	TRGGRB		RW	—	—	√	FFFFH
F025BH								

Table 3 - 15 Extended Special Function Register (2nd SFR) List (6/8)

Address	Extended Special Function Register (2nd SFR) Name	Symbol	R/W	Manipulable Bit Range			After Reset
				1-bit	8-bit	16-bit	
F0260H	Timer RD ELC register	TRDELC	R/W	√	√	—	00H[Note]
F0263H	Timer RD start register	TRDSTR	R/W	—	√	—	0CH[Note]
F0264H	Timer RD mode register	TRDMR	R/W	√	√	—	00H[Note]
F0265H	Timer RD PWM function select register	TRDPMR	R/W	√	√	—	00H[Note]
F0266H	Timer RD function control register	TRDFCR	R/W	√	√	—	80H[Note]
F0267H	Timer RD output master enable register 1	TRDOER1	R/W	√	√	—	FFH[Note]
F0268H	Timer RD output master enable register 2	TRDOER2	R/W	√	√	—	00H[Note]
F0269H	Timer RD output control register	TRDOCR	R/W	√	√	—	00H[Note]
F026AH	Timer RD digital filter function select register 0	TRDDF0	R/W	√	√	—	00H
F026BH	Timer RD digital filter function select register 1	TRDDF1	R/W	√	√	—	00H
F0270H	Timer RD control register 0	TRDCR0	R/W	√	√	—	00H[Note]
F0271H	Timer RD I/O control register A0	TRDIORA0	R/W	√	√	—	00H[Note]
F0272H	Timer RD I/O control register C0	TRDIORC0	R/W	√	√	—	88H[Note]
F0273H	Timer RD status register 0	TRDSR0	R/W	√	√	—	00H[Note]
F0274H	Timer RD interrupt enable register 0	TRDIER0	R/W	√	√	—	00H[Note]
F0275H	Timer RD PWM function output level control register 0	TRDPOCR0	R/W	√	√	—	00H[Note]
F0276H F0277H	Timer RD counter 0	TRD0	R/W	—	—	√	0000H[Note]
F0278H F0279H	Timer RD general register A0	TRDGRA0	R/W	—	—	√	FFFFH[Note]
F027AH F027BH	Timer RD general register B0	TRDGRB0	R/W	—	—	√	FFFFH[Note]
F0280H	Timer RD control register 1	TRDCR1	R/W	√	√	—	00H[Note]
F0281H	Timer RD I/O control register A1	TRDIORA1	R/W	√	√	—	00H[Note]
F0282H	Timer RD I/O control register C1	TRDIORC1	R/W	√	√	—	88H[Note]
F0283H	Timer RD status register 1	TRDSR1	R/W	√	√	—	00H[Note]
F0284H	Timer RD interrupt enable register 1	TRDIER1	R/W	√	√	—	00H[Note]
F0285H	Timer RD PWM function output level control register 1	TRDPOCR1	R/W	√	√	—	00H[Note]
F0286H F0287H	Timer RD counter 1	TRD1	R/W	—	—	√	0000H[Note]
F0288H F0289H	Timer RD general register A1	TRDGRA1	R/W	—	—	√	FFFFH[Note]
F028AH F028BH	Timer RD general register B1	TRDGRB1	R/W	—	—	√	FFFFH[Note]

Note The timer RD SFRs are undefined when FRQSEL4 = 1 in the user option byte (000C2H) and TRD0EN = 0 in the PER1 register. If it is necessary to read the initial value, set f_{CLK} to f_{IH} and TRD0EN = 1 before reading.

Table 3 - 16 Extended Special Function Register (2nd SFR) List (7/8)

Address	Extended Special Function Register (2nd SFR) Name	Symbol	R/W	Manipulable Bit Range			After Reset
				1-bit	8-bit	16-bit	
F02E0H	DTC base address register	DTCBAR	R/W	√	√	—	FDH
F02E8H	DTC activation enable register 0	DTCEN0	R/W	√	√	—	00H
F02E9H	DTC activation enable register 1	DTCEN1	R/W	√	√	—	00H
F02EAH	DTC activation enable register 2	DTCEN2	R/W	√	√	—	00H
F02EBH	DTC activation enable register 3	DTCEN3	R/W	√	√	—	00H
F02ECH	DTC activation enable register 4	DTCEN4	R/W	√	√	—	00H
F02F0H	Flash memory CRC control register	CRC0CTL	R/W	√	√	—	00H
F02F2H	Flash memory CRC operation result register	PGCRCL	R/W	—	—	√	0000H
F02FAH	CRC data register	CRCD	R/W	—	—	√	0000H
F0300H	Event output destination select register 00	ELSELR00	R/W	—	√	—	00H
F0301H	Event output destination select register 01	ELSELR01	R/W	—	√	—	00H
F0302H	Event output destination select register 02	ELSELR02	R/W	—	√	—	00H
F0303H	Event output destination select register 03	ELSELR03	R/W	—	√	—	00H
F0304H	Event output destination select register 04	ELSELR04	R/W	—	√	—	00H
F0305H	Event output destination select register 05	ELSELR05	R/W	—	√	—	00H
F0306H	Event output destination select register 06	ELSELR06	R/W	—	√	—	00H
F0307H	Event output destination select register 07	ELSELR07	R/W	—	√	—	00H
F0308H	Event output destination select register 08	ELSELR08	R/W	—	√	—	00H
F0309H	Event output destination select register 09	ELSELR09	R/W	—	√	—	00H
F030AH	Event output destination select register 10	ELSELR10	R/W	—	√	—	00H
F030BH	Event output destination select register 11	ELSELR11	R/W	—	√	—	00H
F030CH	Event output destination select register 12	ELSELR12	R/W	—	√	—	00H
F030DH	Event output destination select register 13	ELSELR13	R/W	—	√	—	00H
F030EH	Event output destination select register 14	ELSELR14	R/W	—	√	—	00H
F030FH	Event output destination select register 15	ELSELR15	R/W	—	√	—	00H
F0310H	Event output destination select register 16	ELSELR16	R/W	—	√	—	00H
F0311H	Event output destination select register 17	ELSELR17	R/W	—	√	—	00H
F0312H	Event output destination select register 18	ELSELR18	R/W	—	√	—	00H
F0313H	Event output destination select register 19	ELSELR19	R/W	—	√	—	00H
F0314H	Event output destination select register 20	ELSELR20	R/W	—	√	—	00H
F0340H	Comparator mode setting register	COMPMDR	R/W	√	√	—	00H
F0341H	Comparator filter control register	COMPFIR	R/W	√	√	—	00H
F0342H	Comparator output control register	COMPOCR	R/W	√	√	—	00H
F0343H	Comparator internal reference voltage control register	CVRCTL	R/W	√	√	—	00H

Table 3 - 17 Extended Special Function Register (2nd SFR) List (8/8)

Address	Extended Special Function Register (2nd SFR) Name	Symbol	R/W	Manipulable Bit Range			After Reset
				1-bit	8-bit	16-bit	
F0344H	Comparator internal reference voltage select register 0	C0RVM	R/W	—	√	—	00H
F0345H	Comparator internal reference voltage select register 1	C1RVM	R/W	—	√	—	00H
F0347H	PGA control register	PGACTL	R/W	√	√	—	00H
F034AH	Comparator 0 input select control register	CMPSEL0	R/W	√	√	—	00H
F034BH	Comparator 1 input select control register	CMPSEL1	R/W	√	√	—	00H
F0350H	Timer RX count register	TRX	R/W	—	—	√	0000H
F0352H	Timer RX count buffer register	TRXBUF	R/W	—	—	√	0000H
F0354H	Timer RX function control register 1	TRXCR1	R/W	√	√	—	00H
F0355H	Timer RX function control register 0	TRXCR0	R/W	√	√	—	00H
F0356H	Timer RX status register	TRXSR	R/W	√	√	—	00H
F0358H	PWMOPA control register 0	OPCTL0	R/W	√	√	—	00H
F0359H	PWMOPA cutoff control register 0	OPDF0	R/W	—	√	—	00H
F035Ah	PWMOPA cutoff control register 1	OPDF1	R/W	—	√	—	00H
F035BH	PWMOPA edge selection register	OPEDGE	R/W	—	√	—	00H
F035CH	PWMOPA status register	OPSR	R	√	√	—	00H
F03A0H	IrDA control register	IRCR	R/W	√	√	—	00H
F0500H	Timer RJ counter register 0	TRJ0	R/W	—	—	√	FFFFH

Remark For SFRs in the SFR area, see **Tables 3 - 6** to **3 - 9 Special Function Register (SFR) List**.

3.4 Instruction Address Addressing

3.4.1 Relative addressing

[Function]

Relative addressing stores in the program counter (PC) the result of adding a displacement value included in the instruction word (signed complement data: –128 to +127 or –32768 to +32767) to the program counter (PC)'s value (the start address of the next instruction), and specifies the program address to be used as the branch destination. Relative addressing is applied only to branch instructions.

Figure 3 - 11 Outline of Relative Addressing

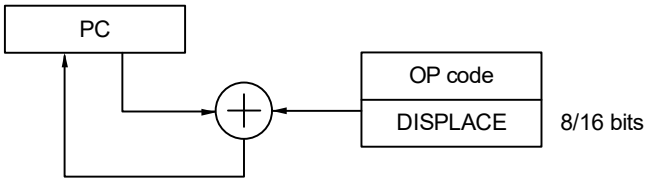

3.4.2 Immediate addressing

[Function]

Immediate addressing stores immediate data of the instruction word in the program counter, and specifies the program address to be used as the branch destination.

For immediate addressing, CALL !!addr20 or BR !!addr20 is used to specify 20-bit addresses and CALL !addr16 or BR !addr16 is used to specify 16-bit addresses. 0000 is set to the higher 4 bits when specifying 16-bit addresses.

Figure 3 - 12 Example of CALL !!addr20/BR !!addr20

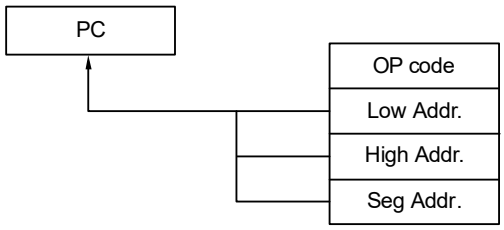

Figure 3 - 13 Example of CALL !addr16/BR !addr16

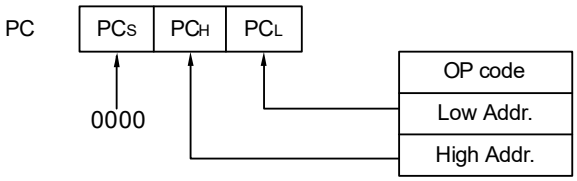

3.4.3 Table indirect addressing

[Function]

Table indirect addressing specifies a table address in the CALLT table area (0080H to 00BFH) with the 5-bit immediate data in the instruction word, stores the contents at that table address and the next address in the program counter (PC) as 16-bit data, and specifies the program address. Table indirect addressing is applied only for CALLT instructions.

In the RL78 microcontrollers, branching is enabled only to the 64 KB space from 00000H to 0FFFFH.

Figure 3 - 14 Outline of Table Indirect Addressing

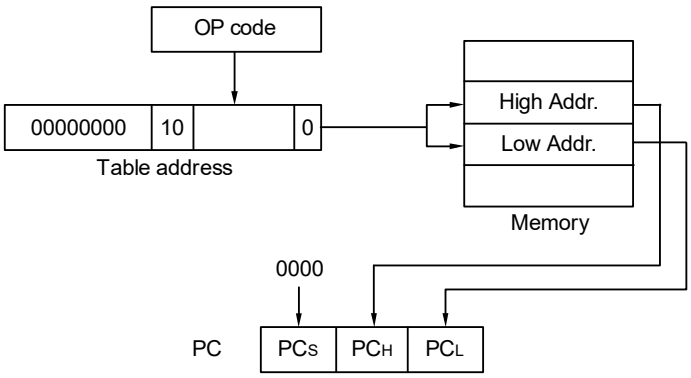

3.4.4 Register direct addressing

[Function]

Register direct addressing stores in the program counter (PC) the contents of a general-purpose register pair (AX/BC/DE/HL) and CS register of the current register bank specified with the instruction word as 20-bit data, and specifies the program address. Register direct addressing can be applied only to the CALL AX, BC, DE, HL, and BR AX instructions.

Figure 3 - 15 Outline of Register Direct Addressing

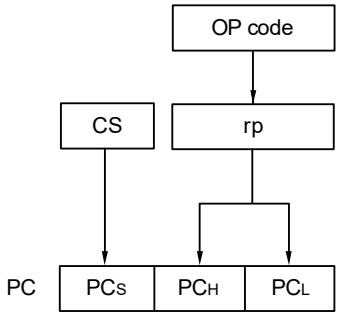

3.5 Addressing for Processing Data Addresses

3.5.1 Implied addressing

[Function]

Instructions for accessing registers (such as accumulators) that have special functions are directly specified with the instruction word, without using any register specification field in the instruction word.

[Operand format]

Implied addressing can be applied only to MULU X.

Figure 3 - 16 Outline of Implied Addressing

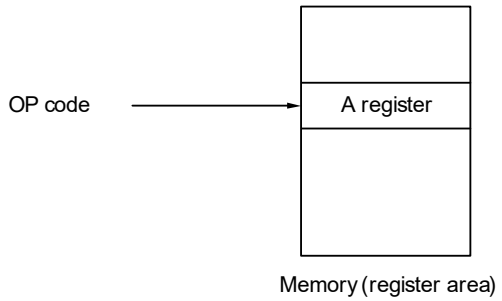

3.5.2 Register addressing

[Function]

Register addressing accesses a general-purpose register as an operand. The instruction word of 3-bit long is used to select an 8-bit register and the instruction word of 2-bit long is used to select a 16-bit register.

[Operand format]

Identifier	Description
r	X, A, C, B, E, D, L, H
rp	AX, BC, DE, HL

Figure 3 - 17 Outline of Register Addressing

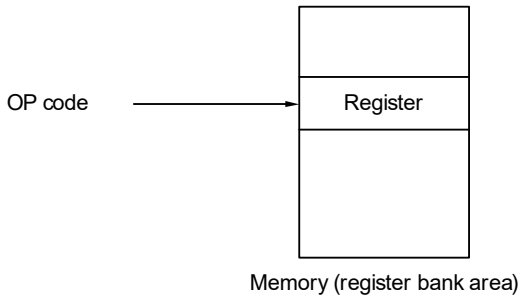

3.5.3 Direct addressing

[Function]

Direct addressing uses immediate data in the instruction word as an operand address to directly specify the target address.

[Operand format]

Identifier	Description
!addr16	Label or 16-bit immediate data (only the space from F0000H to FFFFFH is specifiable)
ES:!addr16	Label or 16-bit immediate data (higher 4-bit addresses are specified by the ES register)

Figure 3 - 18 Example of !addr16

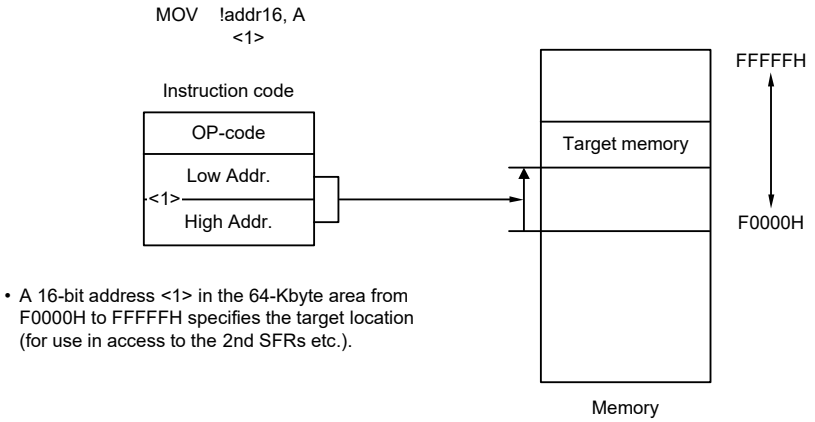

Figure 3 - 19 Example of ES:!addr16

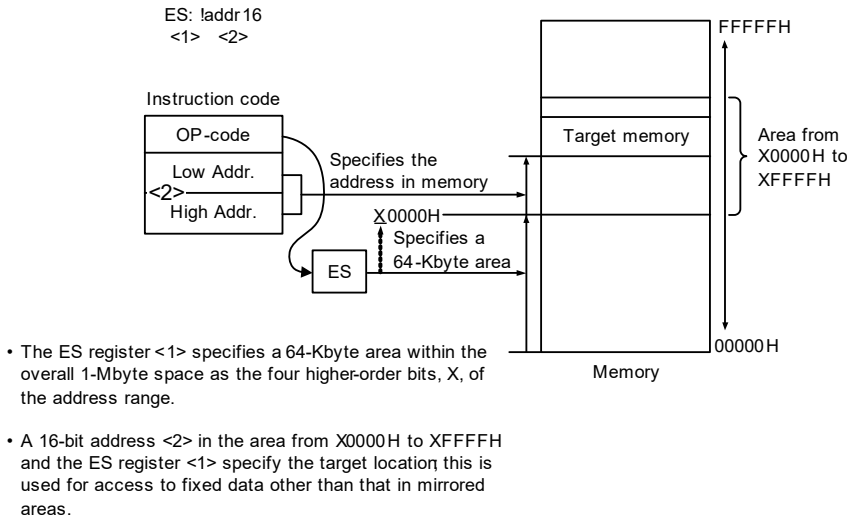

3.5.4 Short direct addressing

[Function]

Short direct addressing directly specifies the target addresses using 8-bit data in the instruction word. This type of addressing is applied only to the space from FFE20H to FFF1FH.

[Operand format]

Identifier	Description
SADDR	Label, FFE20H to FFF1FH immediate data, or 0FE20H to 0FF1FH immediate data (only the space from FFE20H to FFF1FH is specifiable)
SADDRP	Label, FFE20H to FFF1FH immediate data, or 0FE20H to 0FF1FH immediate data (even address only) (only the space from FFE20H to FFF1FH is specifiable)

Figure 3 - 20 Outline of Short Direct Addressing

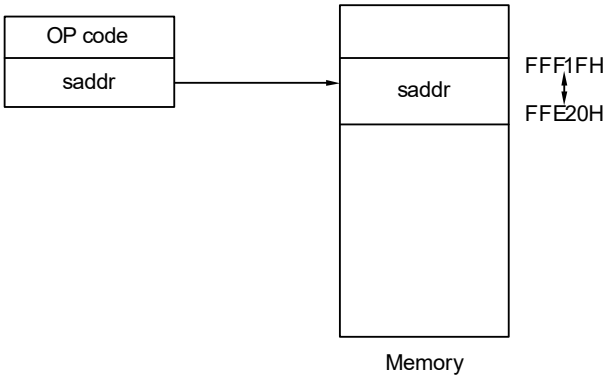

Remark SADDR and SADDRP are used to describe the values of addresses FE20H to FF1FH with 16-bit immediate data (higher 4 bits of actual address are omitted), and the values of addresses FFE20H to FFF1FH with 20-bit immediate data.
Regardless of whether SADDR or SADDRP is used, addresses within the space from FFE20H to FFF1FH are specified for the memory.

3.5.5 SFR addressing

[Function]

SFR addressing directly specifies the target SFR addresses using 8-bit data in the instruction word. This type of addressing is applied only to the space from FFF00H to FFFFFH.

[Operand format]

Identifier	Description
SFR	SFR name
SFRP	16-bit-manipulatable SFR name (even address)

Figure 3 - 21 Outline of SFR Addressing

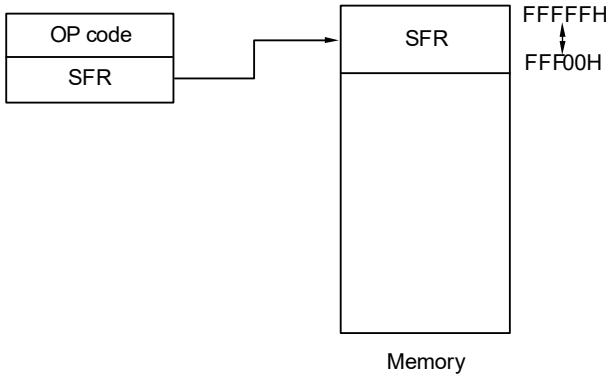

3.5.6 Register indirect addressing

[Function]

Register indirect addressing directly specifies the target addresses using the contents of the register pair specified with the instruction word as an operand address.

[Operand format]

Identifier	Description
—	[DE], [HL] (only the space from F0000H to FFFFFH is specifiable)
—	ES:[DE], ES:[HL] (higher 4-bit addresses are specified by the ES register)

Figure 3 - 22 Example of [DE], [HL]

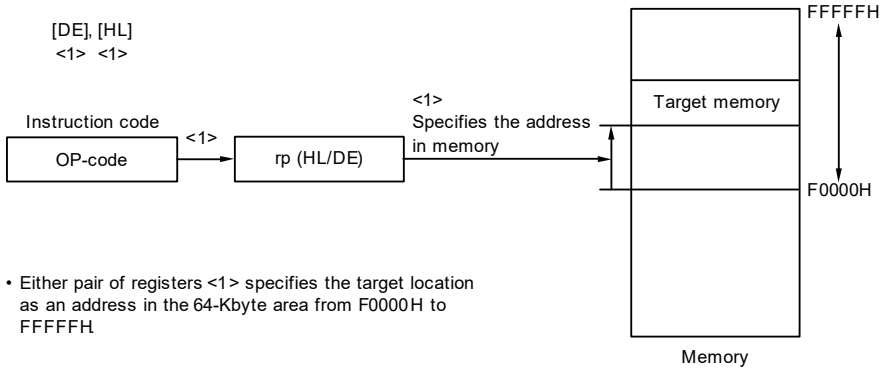

Figure 3 - 23 Example of ES:[DE], ES:[HL]

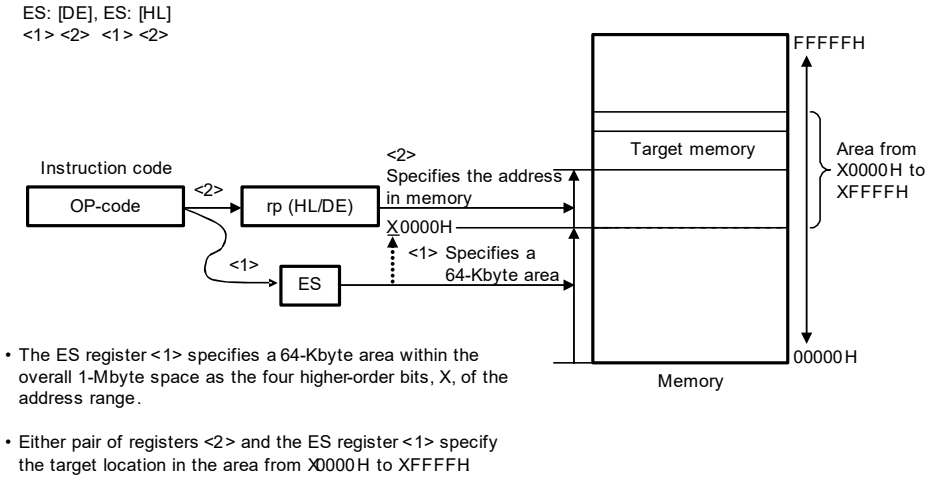

3.5.7 Based addressing

[Function]

Based addressing uses the contents of a register pair specified with the instruction word or 16-bit immediate data as a base address, and 8-bit immediate data or 16-bit immediate data as offset data. The sum of these values is used to specify the target address.

[Operand format]

Identifier	Description
—	[HL + byte], [DE + byte], [SP + byte] (only the space from F0000H to FFFFFH is specifiable)
—	word[B], word[C] (only the space from F0000H to FFFFFH is specifiable)
—	word[BC] (only the space from F0000H to FFFFFH is specifiable)
—	ES:[HL + byte], ES:[DE + byte] (higher 4-bit addresses are specified by the ES register)
—	ES:word[B], ES:word[C] (higher 4-bit addresses are specified by the ES register)
—	ES:word[BC] (higher 4-bit addresses are specified by the ES register)

Figure 3 - 24 Example of [SP+byte]

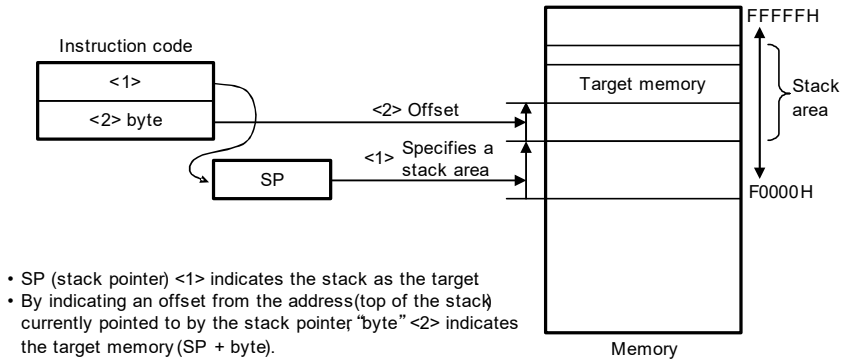

Figure 3 - 25 Example of [HL + byte], [DE + byte]]

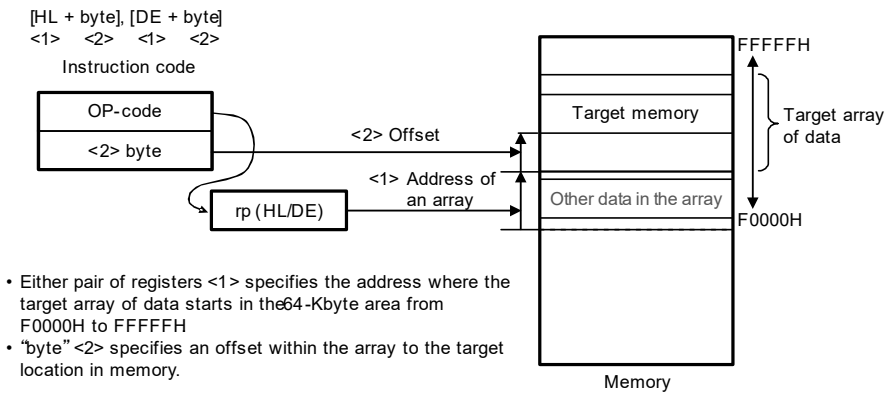

Figure 3 - 26 Example of word [B], word [C]

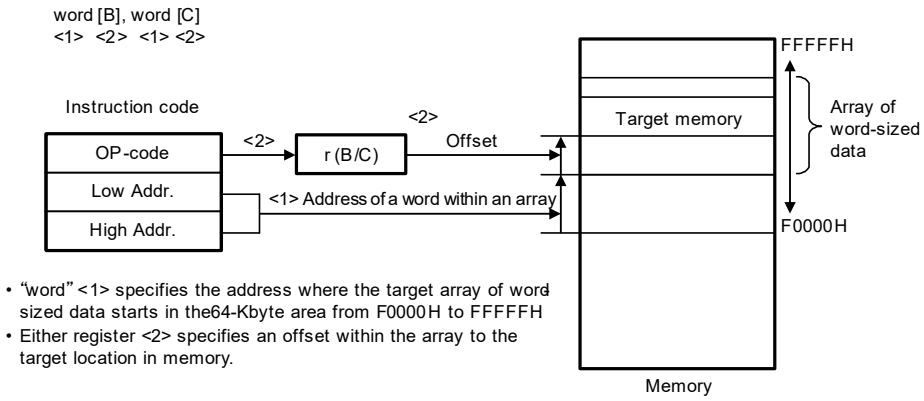

Figure 3 - 27 Example of word [BC]

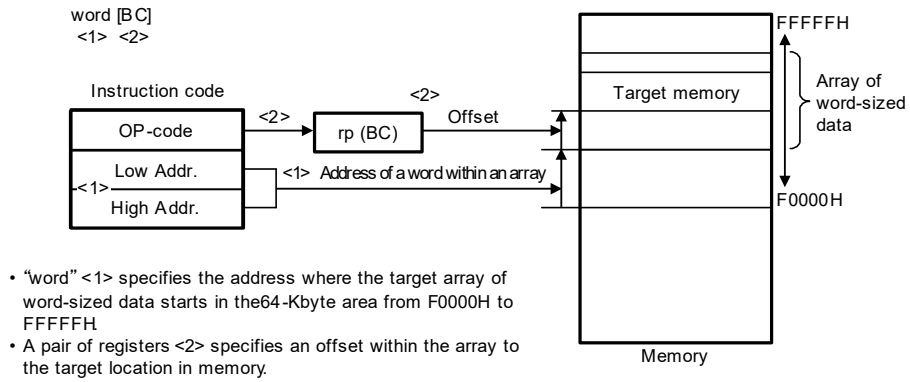

Figure 3 - 28 Example of [HL + byte], [DE + byte]]

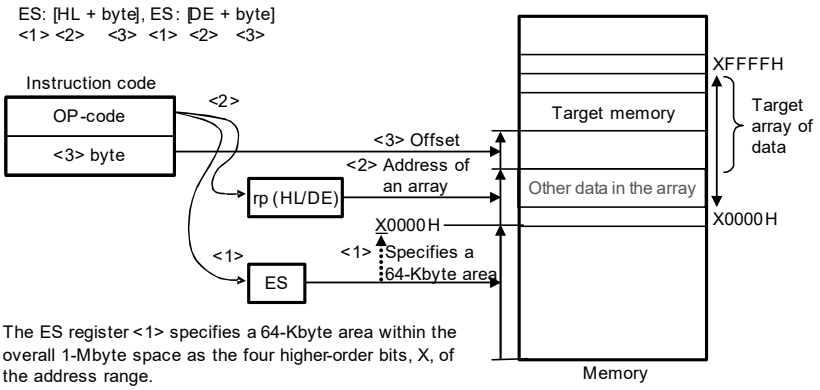

- The ES register <1> specifies a 64-Kbyte area within the overall 1-Mbyte space as the four higher-order bits, X, of the address range.
- Either pair of registers <2> specifies the address where the target array of data starts in the64-Kbyte area specified in the ES register <1>.
- "byte" <3> specifies an offset within the array to the target location in memory.

Figure 3 - 29 Example of word [B], word [C]

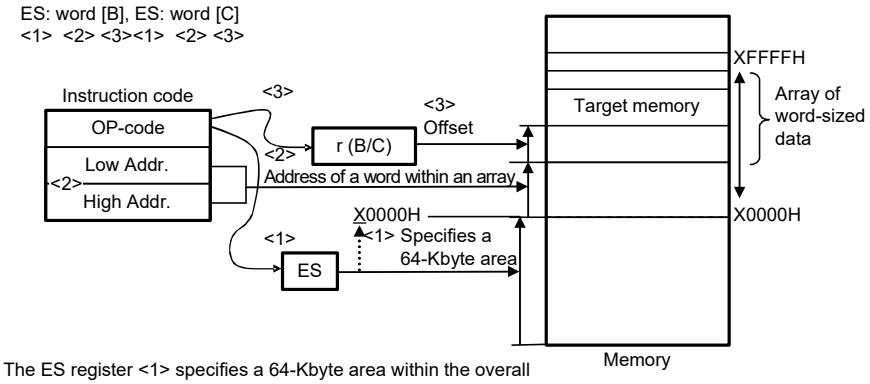

- The ES register <1> specifies a 64-Kbyte area within the overall 1-Mbyte space as the four higher-order bits, X, of the address range.
- "word" <2> specifies the address where the target array of word-sized data starts in the 64-Kbyte area specified in the ES register <1>.
- Either register <3> specifies an offset within the array to the target location in memory.

Figure 3 - 30 Example of word [BC]

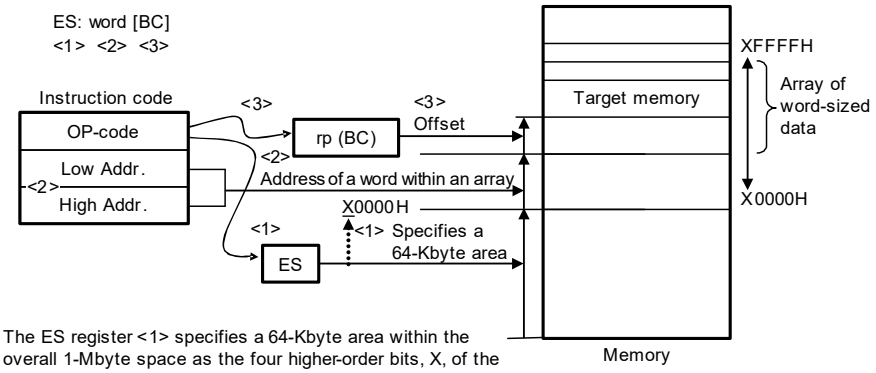

- The ES register <1> specifies a 64-Kbyte area within the overall 1-Mbyte space as the four higher-order bits, X, of the address range.
- "word" <2> specifies the address where the target array of word-sized data starts in the64-Kbyte area specified in the ES register <1>.
- A pair of registers <3> specifies an offset within the array to the target location in memory.

3.5.8 Based indexed addressing

[Function]

Based indexed addressing uses the contents of a register pair specified with the instruction word as the base address, and the content of the B register or C register similarly specified with the instruction word as offset address. The sum of these values is used to specify the target address.

[Operand format]

Identifier	Description
—	[HL+B], [HL+C] (only the space from F0000H to FFFFFH is specifiable)
—	ES:[HL+B], ES:[HL+C] (higher 4-bit addresses are specified by the ES register)

Figure 3 - 31 Example of [HL + B], [HL + C]

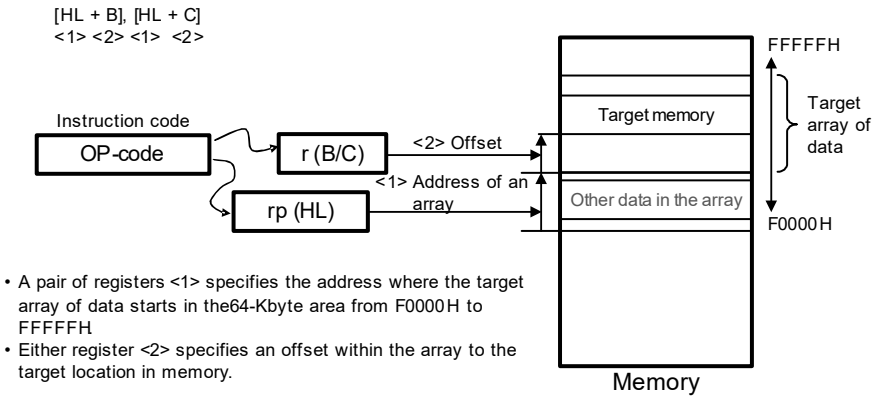

Figure 3 - 32 Example of ES:[HL + B], ES:[HL + C]

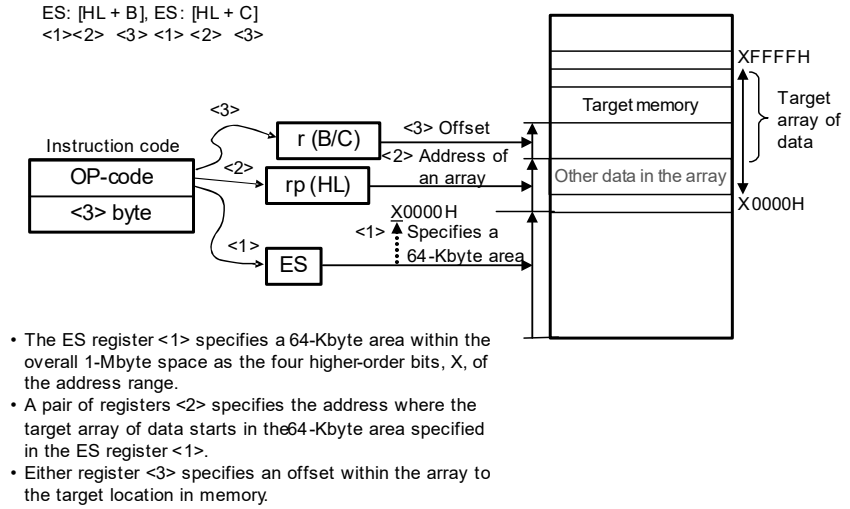

3.5.9 Stack addressing

[Function]

The stack area is indirectly addressed with the stack pointer (SP) values. This addressing is automatically employed when the PUSH, POP, subroutine call, and return instructions are executed or the register is saved/restored upon generation of an interrupt request.

Only the internal RAM area can be set as the stack area.

[Operand format]

Identifier	Description
—	PUSH PSW AX/BC/DE/HL POP PSW AX/BC/DE/HL CALL/CALLT RET BRK RETB (Interrupt request generated) RETI

The data to be saved/restored by each stack operation is shown in Figures 3 - 33 to 3 - 38.

Figure 3 - 33 Example of PUSH rp

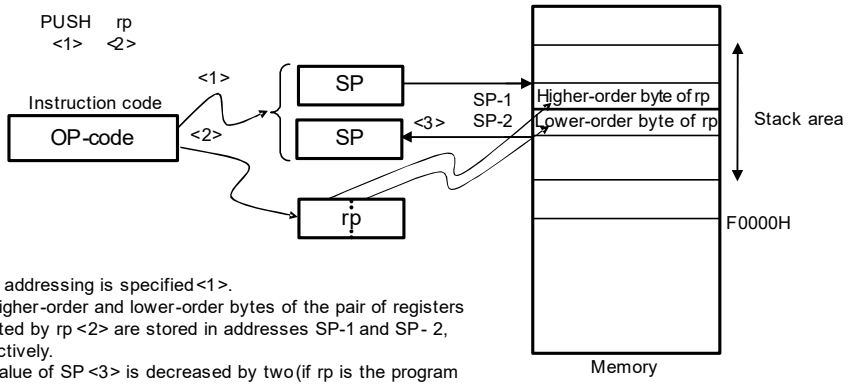

- Stack addressing is specified <1>.
- The higher-order and lower-order bytes of the pair of registers indicated by rp <2> are stored in addresses SP-1 and SP- 2, respectively.
- The value of SP <3> is decreased by two (if rp is the program status word (PSW), the value of the PSW is stored in SP-1 and 0 is stored in SP- 2).

Figure 3 - 34 Example of POP

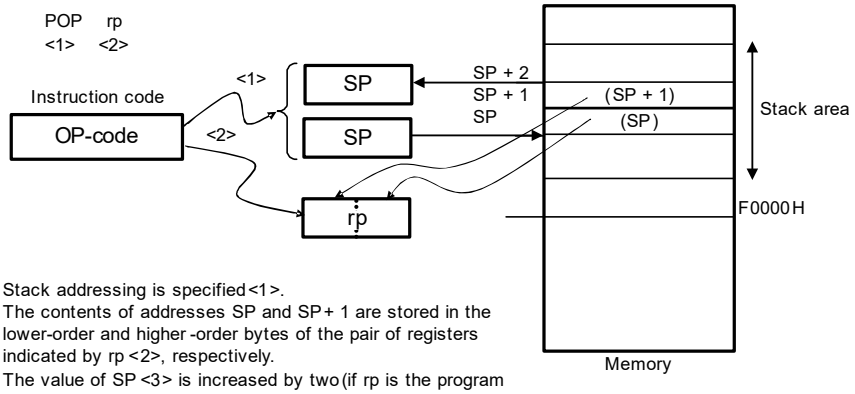

- Stack addressing is specified <1>.
- The contents of addresses SP and SP + 1 are stored in the lower-order and higher-order bytes of the pair of registers indicated by rp <2>, respectively.
- The value of SP <3> is increased by two (if rp is the program status word (PSW), the content of address SP + 1 is stored in the PSW).

Figure 3 - 35 Example of CALL, CALLT

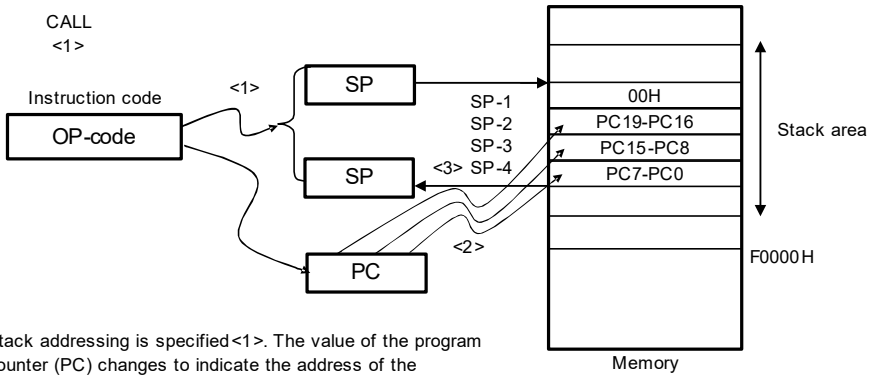

- Stack addressing is specified <1>. The value of the program counter (PC) changes to indicate the address of the instruction following the CALL instruction
- 00H, the values of PC bits 19 to 16, 15 to 8, and 7 to 0 are stored in addresses SP-1, SP-2, SP-3, and SP-4, respectively <2>.
- The value of the SP <3> is decreased by 4.

Figure 3 - 36 Example of RET

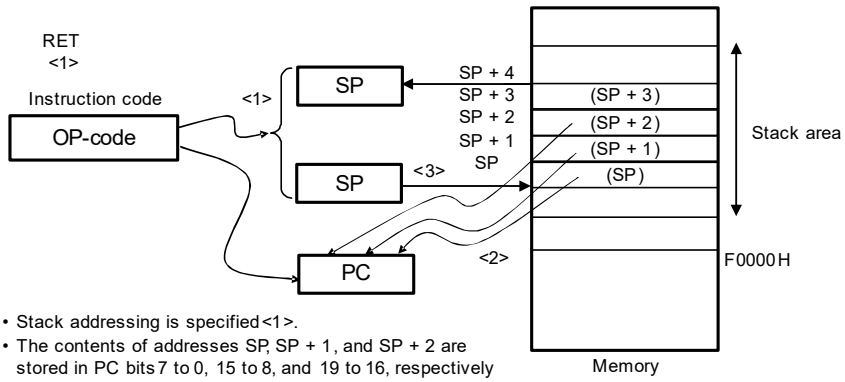

- Stack addressing is specified <1>.
- The contents of addresses SP, SP + 1, and SP + 2 are stored in PC bits 7 to 0, 15 to 8, and 19 to 16, respectively <2>.
- The value of SP <3> is increased by four.

Figure 3 - 37 Example of Interrupt, BRK

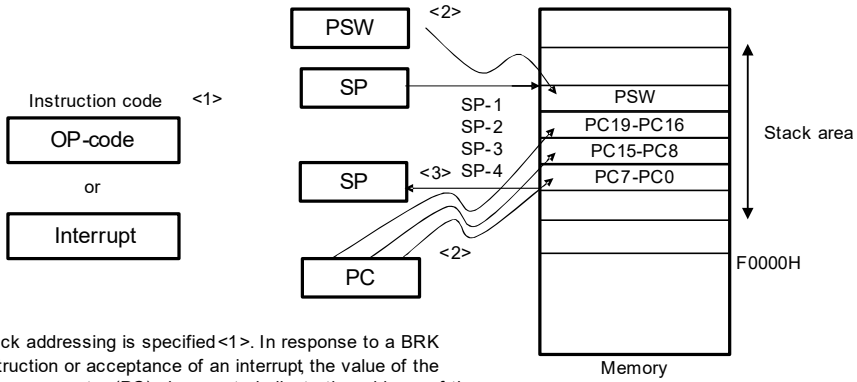

- Stack addressing is specified <1>. In response to a BRK instruction or acceptance of an interrupt, the value of the program counter (PC) changes to indicate the address of the next instruction.
- The values of the PSW, PC bits 19 to 16, 15 to 8, and 7 to 0 are stored in addresses SP-1, SP-2, SP-3, and SP-4, respectively <2>.
- The value of the SP <3> is decreased by 4.

Figure 3 - 38 Example of RETI, RETB

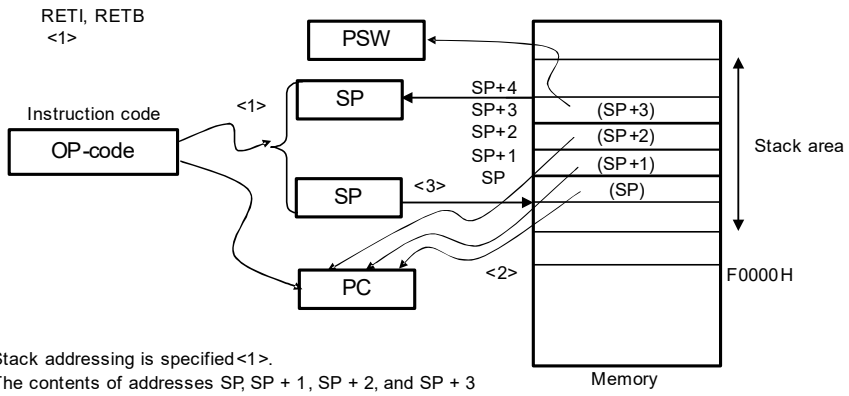

- Stack addressing is specified <1>.
- The contents of addresses SP, SP + 1, SP + 2, and SP + 3 are stored in PC bits 7 to 0, 15 to 8, 19 to 16, and the PSW, respectively <2>.
- The value of SP <3> is increased by four.

CHAPTER 4 PORT FUNCTIONS

4.1 Port Functions

The RL78/G1F microcontrollers are provided with digital I/O ports, which enable variety of control operations.
In addition to the function as digital I/O ports, these ports have several alternate functions. For details of the alternate functions, see **CHAPTER 2 PIN FUNCTIONS**.

4.2 Port Configuration

Ports include the following hardware.

Table 4 - 1 Port Configuration

Item	Configuration
Control registers	Port mode registers (PM0 to PM7, PM12, PM14) Port registers (P0 to P7, P12 to P14) Pull-up resistor option registers (PU0, PU1, PU3 to PU5, PU7, PU12, PU14) Port input mode registers (PIM0, PIM1, PIM3, PIM5, PIM7) Port output mode registers (POM0, POM1, POM3, POM5, POM7) Port mode control registers (PMC0 to PMC2, PMC12, PMC14) Peripheral I/O redirection registers (PIOR0 to PIOR3) Global digital input disable register (GDIDIS)
Port	• 24-pin products Total: 20 (CMOS I/O: 17 (N-ch open drain I/O [V_{DD} tolerance]: 10), CMOS input: 3) • 32-pin products Total: 28 (CMOS I/O: 25 (N-ch open drain I/O [V_{DD} tolerance]: 12), CMOS input: 3) • 36-pin products Total: 31 (CMOS I/O: 24 (N-ch open drain I/O [EV_{DD} tolerance]: 10), CMOS input: 5, N-ch open drain I/O [6 V tolerance]: 2) • 48-pin products Total: 44 (CMOS I/O: 34 (N-ch open drain I/O [V_{DD} tolerance]: 12), CMOS input: 5, CMOS output: 1, N-ch open drain I/O [6 V tolerance]: 4) • 64-pin products Total: 58 (CMOS I/O: 48 (N-ch open drain I/O [EV_{DD} tolerance]: 16), CMOS input: 5, CMOS output: 1, N-ch open drain I/O [6 V tolerance]: 4)
Pull-up resistor	• 24-pin products Total: 14 • 32-pin products Total: 21 • 36-pin products Total: 18 • 48-pin products Total: 26 • 64-pin products Total: 40

4.2.1 Port 0

Port 0 is an I/O port with an output latch. Port 0 can be set to the input mode or output mode in 1-bit units using port mode register 0 (PM0). When the P00 to P06 pins are used as an input port, use of an on-chip pull-up resistor can be specified in 1-bit units by pull-up resistor option register 0 (PU0).

Input to the P00[Note 1], P01, P03 and P04 pins can be specified through a normal input buffer or a TTL input buffer in 1-bit units using port input mode register 0 (PIM0).

Output from the P00, P01[Note 1], and P02 to P04 pins can be specified as N-ch open-drain output (V_{DD} tolerance [Note 2]/EV_{DD} tolerance [Note 3]) in 1-bit units using port output mode register 0 (POM0).

To use P00[Note 2], P01[Note 2], P02[Note 3], and P03[Note 3] as digital input/output pins, set them in the digital I/O mode by using port mode control register 0 (PMC0) (can be specified in 1-bit units).

This port can also be used for timer I/O, A/D converter analog input, serial interface data I/O, clock I/O, and comparator I/O.

When reset signal is generated, the following configuration will be set.

- P00 and P01 pins of the 24 to 48-pin products..... Analog input
- P02 and P03 pins of the 64-pin products..... Analog input
- Other pins ..... Input port

Note 1. For 24-pin products

Note 2. For 24 to 48-pin products

Note 3. For 36 and 64-pin products

4.2.2 Port 1

Port 1 is an I/O port with an output latch. Port 1 can be set to the input mode or output mode in 1-bit units using port mode register 1 (PM1). When the P10 to P17 pins are used as an input port, use of an on-chip pull-up resistor can be specified in 1-bit units by pull-up resistor option register 1 (PU1).

Input to the P10 and P14 to P17 pins can be specified through a normal input buffer or a TTL input buffer in 1-bit units using port input mode register 1 (PIM1).

Output from the P10, P11, P13 to P15 and P17 pins can be specified as N-ch open-drain output (V_{DD} tolerance[Note 1]/EV_{DD} tolerance[Note 2]) in 1-bit units using port output mode register 1 (POM1).

This port can also be used for serial interface data I/O, clock I/O, timer I/O, external interrupt request input, comparator output, and A/D converter analog input.

To use the P10, P11, and P12 to P14[Note 3] pins as analog input pins, set them to analog input using port mode control register 1 (PMC1) (can be specified in 1-bit units).

When reset signal is generated, the following configuration will be set.

- P10 to P14 pins of the 32 to 64-pin products..... Analog input
- P10 and P11 pins of the 24-pin products..... Analog input
- Other pins ..... Input port

Note 1. For 24, 32, and 48-pin products

Note 2. For 36 and 64-pin products

Note 3. For 32 to 64-pin products

4.2.3 Port 2

Port 2 is an I/O port with an output latch. Port 2 can be set to the input mode or output mode in 1-bit units using port mode register 2 (PM2).

This port can also be used for A/D converter analog input and reference voltage (+ side and - side) input, comparator input, programmable gain amplifier input, external interrupt request input, and D/A converter output.

To use P20/ANI0, P21/ANI1, P22/ANI2/ANO0, P23/ANI3/ANO1, and P24/ANI4 to P27/ANI7 as analog input pins, set them to analog input using the port mode control register 2 (PMC2) (can be specified in 1-bit units).

All P20/ANI0 to P27/ANI7 are set in the analog function mode when the reset signal is generated.

Table 4 - 2 Setting Functions of P20/ANI0, P21/ANI1, P24/ANI4 to P27/ANI7 Pins

PMC2 Register	PM2 Register	ADS Register	P20/ANI0, P21/ANI1, P24/ANI4 to P27/ANI7 Pins
Digital I/O selection	Input mode	—	Digital input
	Output mode	—	Digital output
Analog function selection	Input mode	Selects ANI.	Analog input (to be converted)
		Does not select ANI.	Analog input (not to be converted)
	Output mode	Selects ANI.	Setting prohibited
		Does not select ANI.	

Table 4 - 3 Setting Functions of P22/ANI2/ANO0, P23/ANI3/ANO1 Pins

PMC2 Register	PM2 Register	DAM Register	ADS Register	P22/ANI2/ANO0, P23/ANI3/ANO1 Pins
Digital I/O selection	Input mode	—	—	Digital input
	Output mode	—	—	Digital output
Analog function selection	Input mode	Enables D/A conversion operation	Selects ANI.	Setting prohibited
			Does not select ANI.	Analog output
		Stops D/A conversion operation	Selects ANI.	Analog input (to be converted)
			Does not select ANI.	Analog input (not to be converted)
	Output mode	Enables D/A conversion operation	Selects ANI.	Setting prohibited
			Does not select ANI.	
		Stops D/A conversion operation	Selects ANI.	
			Does not select ANI.	

4.2.4 Port 3

Port 3 is an I/O port with an output latch. Port 3 can be set to the input mode or output mode in 1-bit units using port mode register 3 (PM3). When the P30 and P31 pins are used as an input port, use of an on-chip pull-up resistor can be specified in 1-bit units by pull-up resistor option register 3 (PU3).

Input to the P30 and P31[Note 1] pins can be specified through a normal input buffer or a TTL input buffer in 1-bit units using port input mode register 3 (PIM3).

Output from the P30 and P31[Note 1] pins can be specified as N-ch open-drain output (V_{DD} tolerance[Note 2]/EV_{DD} tolerance[Note 3]) in 1-bit units using port output mode register 3 (POM3).

This port can also be used for external interrupt request input, real-time clock correction clock output, serial interface clock I/O, timer I/O, and comparator output.

Reset signal generation sets port 3 to input port.

Note 1. For 32-pin products

Note 2. For 24, 32, and 48-pin products

Note 3. For 36 and 64-pin products

4.2.5 Port 4

Port 4 is an I/O port with an output latch. Port 4 can be set to the input mode or output mode in 1-bit units using port mode register 4 (PM4). When the P40 to P43 pins are used as an input port, use of an on-chip pull-up resistor can be specified in 1-bit units by pull-up resistor option register 4 (PU4).

This port can also be used for data I/O for a flash memory programmer/debugger, timer I/O, and external interrupt request input.

Reset signal generation sets port 4 to input port.

4.2.6 Port 5

Port 5 is an I/O port with an output latch. Port 5 can be set to the input mode or output mode in 1-bit units using port mode register 5 (PM5). When the P50 to P55 pins are used as an input port, use of an on-chip pull-up resistor can be specified in 1-bit units by pull-up resistor option register 5 (PU5).

Input to the P50 and P55 pin can be specified through a normal input buffer or a TTL input buffer in 1-bit units using port input mode register 5 (PIM5).

Output from the P50, P51, and P55 pins can be specified as N-ch open-drain output (V_{DD} tolerance[Note 1]/EV_{DD} tolerance[Note 2]) in 1-bit units using port output mode register 5 (POM5).

This port can also be used for external interrupt request input, serial interface data I/O, clock I/O, programming UART transmission/reception, and timer I/O.

Reset signal generation sets port 5 to input port.

Note 1. For 24, 32, and 48-pin products

Note 2. For 36 and 64-pin products

4.2.7 Port 6

Port 6 is an I/O port with an output latch. Port 6 can be set to the input mode or output mode in 1-bit units using port mode register 6 (PM6).
The output of the P60 to P63 pins is N-ch open-drain output (6 V tolerance).
This port can also be used for serial interface data I/O and clock I/O, and chip select input.
Reset signal generation sets port 6 to input port.

4.2.8 Port 7

Port 7 is an I/O port with an output latch. Port 7 can be set to the input mode or output mode in 1-bit units using port mode register 7 (PM7). When used as an input port, use of an on-chip pull-up resistor can be specified in 1-bit units by pull-up resistor option register 7 (PU7).
Input to the P72[Note 1] and P74[Note 2] pin can be specified through a normal input buffer or a TTL input buffer in 1-bit units using port input mode register 7 (PIM7).
Output from the P71, P72[Note 2], and P74 pins can be specified as N-ch open-drain output (V_{DD} tolerance[Note 3]/EV_{DD} tolerance[Note 4]) in 1-bit units using port output mode register 7 (POM7).
This port can also be used for key interrupt input, serial interface data I/O, clock I/O, and external interrupt request input.
Reset signal generation sets port 7 to input port.

Note 1. For 24-pin products
Note 2. For 32-pin products
Note 3. For 24, 32, and 48-pin products
Note 4. For 36 and 64-pin products

4.2.9 Port 12

P120 is an I/O port with an output latch. Port 12 can be set to the input mode or output mode in 1-bit units using port mode register 12 (PM12). When used as an input port, use of an on-chip pull-up resistor can be specified by pull-up resistor option register 12 (PU12).
P121 to P124 are 4-bit input ports.
To use the P120 pin as a digital I/O port, set it to digital I/O using port mode control register 12 (PMC12).
This port can also be used for A/D converter analog input, comparator output, connecting a resonator for the main system clock, connecting a resonator for the subsystem clock, external clock input for the main system clock, and external clock input for the subsystem clock.
Reset signal generation sets P120 to analog function, and sets P121 to P124 to input port.

4.2.10 Port 13

P130 is a 1-bit output-only port with an output latch. P137 is a 1-bit input-only port.
P130 is fixed an output port, and P137 is fixed an input ports.
This port can also be used for external interrupt request input.

Remark When reset is effected, P130 outputs a low level. If P130 is set to output a high level before reset is effected, the output signal of P130 can be dummy-output as the CPU reset signal.

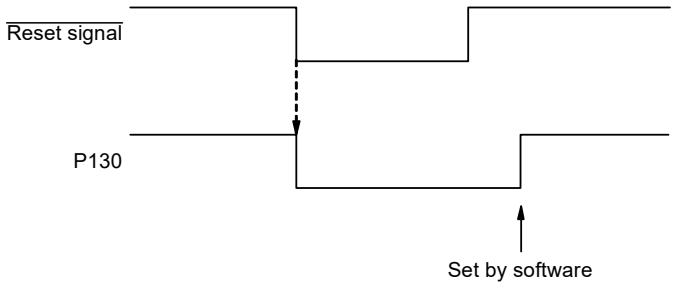

4.2.11 Port 14

Port 14 is an I/O port with an output latch. Port 14 can be set to the input mode or output mode in 1-bit units using port mode register 14 (PM14). When the P140, P141, P146, and P147 pins are used as an input port, use of an on-chip pull-up resistor can be specified in 1-bit units by pull-up resistor option register 14 (PU14).
To use the P147 pin as a digital I/O port, set it to digital I/O using port mode control register 14 (PMC14).
This port can also be used for clock/buzzer output, external interrupt request input, A/D converter analog input, clock I/O, and comparator reference input.
Reset signal generation sets P140, P141, and P146 to input port, and sets P147 to analog function.

4.3 Registers Controlling Port Function

Port functions are controlled by the following registers.

- Port mode registers (PMxx)
- Port registers (Pxx)
- Pull-up resistor option registers (PUxx)
- Port input mode registers (PIMxx)
- Port output mode registers (POMxx)
- Port mode control registers (PMCxx)
- Peripheral I/O redirection registers 0 to 3 (PIOR0 to PIOR3)
- Global digital input disable register (GDIDIS)

Caution Which registers and bits are included depends on the product. For registers and bits mounted on each product, see Tables 4 - 4 to 4 - 6. Be sure to set bits that are not mounted to their initial values.

Table 4 - 4 PMxx, Pxx, PUxx, PIMxx, POMxx, PMCxx registers and the bits mounted on each product (1/3)

Port		Bit name						64-pin	48-pin	36-pin	32-pin	24-pin
		PMxx register	Pxx register	PUxx register	PIMxx register	POMxx register	PMCxx register					
Port 0	0	PM00	P00	PU00	PIM00 Note 2	POM00	PMC00 Note 1	√	√	√	√	√
	1	PM01	P01	PU01	PIM01	POM01 Note 2	PMC01 Note 1	√	√	√	√	√
	2	PM02	P02	PU02	—	POM02	PMC02	√	—	—	—	—
	3	PM03	P03	PU03	PIM03	POM03	PMC03	√	—	—	—	—
	4	PM04	P04	PU04	PIM04	POM04	—	√	—	—	—	—
	5	PM05	P05	PU05	—	—	—	√	—	—	—	—
	6	PM06	P06	PU06	—	—	—	√	—	—	—	—
	7	—	—	—	—	—	—	—	—	—	—	—
Port 1	0	PM10	P10	PU10	PIM10	POM10	PMC10	√	√	√	√	√
	1	PM11	P11	PU11	—	POM11	PMC11	√	√	√	√	√
	2	PM12	P12	PU12	—	—	PMC12 Note 3	√	√	√	√	√
	3	PM13	P13	PU13	—	POM13	PMC13 Note 3	√	√	√	√	√
	4	PM14	P14	PU14	PIM14	POM14	PMC14 Note 3	√	√	√	√	√
	5	PM15	P15	PU15	PIM15	POM15	—	√	√	√	√	√
	6	PM16	P16	PU16	PIM16	—	—	√	√	√	√	—
	7	PM17	P17	PU17	PIM17	POM17	—	√	√	√	√	—
Port 2	0	PM20	P20	—	—	—	PMC20	√	√	√	√	√
	1	PM21	P21	—	—	—	PMC21	√	√	√	√	√
	2	PM22	P22	—	—	—	PMC22	√	√	√	√	√
	3	PM23	P23	—	—	—	PMC23	√	√	√	√	—
	4	PM24	P24	—	—	—	PMC24	√	√	√	—	—
	5	PM25	P25	—	—	—	PMC25	√	√	√	—	—
	6	PM26	P26	—	—	—	PMC26	√	√	—	—	—
	7	PM27	P27	—	—	—	PMC27	√	√	—	—	—

Note 1. For 24 to 48-pin products
Note 2. For 24-pin products
Note 3. For 32 to 64-pin products

Table 4 - 5 PMxx, Pxx, PUxx, PIMxx, POMxx, PMCxx registers and the bits mounted on each product (2/3)

Port		Bit name						64-pin	48-pin	36-pin	32-pin	24-pin
		PMxx register	Pxx register	PUxx register	PIMxx register	POMxx register	PMCxx register					
Port 3	0	PM30	P30	PU30	PIM30	POM30	—	√	√	√	√	—
	1	PM31	P31	PU31	PIM31Note	POM31Note	—	√	√	√	√	—
	2	—	—	—	—	—	—	—	—	—	—	—
	3	—	—	—	—	—	—	—	—	—	—	—
	4	—	—	—	—	—	—	—	—	—	—	—
	5	—	—	—	—	—	—	—	—	—	—	—
	6	—	—	—	—	—	—	—	—	—	—	—
	7	—	—	—	—	—	—	—	—	—	—	—
Port 4	0	PM40	P40	PU40	—	—	—	√	√	√	√	√
	1	PM41	P41	PU41	—	—	—	√	√	—	—	—
	2	PM42	P42	PU42	—	—	—	√	—	—	—	—
	3	PM43	P43	PU43	—	—	—	√	—	—	—	—
	4	—	—	—	—	—	—	—	—	—	—	—
	5	—	—	—	—	—	—	—	—	—	—	—
	6	—	—	—	—	—	—	—	—	—	—	—
	7	—	—	—	—	—	—	—	—	—	—	—
Port 5	0	PM50	P50	PU50	PIM50	POM50	—	√	√	√	√	√
	1	PM51	P51	PU51	—	POM51	—	√	√	√	√	√
	2	PM52	P52	PU52	—	—	—	√	—	—	—	—
	3	PM53	P53	PU53	—	—	—	√	—	—	—	—
	4	PM54	P54	PU54	—	—	—	√	—	—	—	—
	5	PM55	P55	PU55	PIM55	POM55	—	√	—	—	—	—
	6	—	—	—	—	—	—	—	—	—	—	—
	7	—	—	—	—	—	—	—	—	—	—	—
Port 6	0	PM60	P60	—	—	—	—	√	√	√	—	—
	1	PM61	P61	—	—	—	—	√	√	√	—	—
	2	PM62	P62	—	—	—	—	√	√	—	—	—
	3	PM63	P63	—	—	—	—	√	√	—	—	—
	4	—	—	—	—	—	—	—	—	—	—	—
	5	—	—	—	—	—	—	—	—	—	—	—
	6	—	—	—	—	—	—	—	—	—	—	—
	7	—	—	—	—	—	—	—	—	—	—	—

Note For 32-pin products

Table 4 - 6 PMxx, Pxx, PUxx, PIMxx, POMxx, PMCxx registers and the bits mounted on each product (2/3)

Port		Bit name						64-pin	48-pin	36-pin	32-pin	24-pin
		PMxx register	Pxx register	PUxx register	PIMxx register	POMxx register	PMCxx register					
Port 7	0	PM70	P70	PU70	—	—	—	√	√	√	√	—
	1	PM71	P71	PU71	—	POM71	—	√	√	—	—	—
	2	PM72	P72	PU72	PIM72Note 1	POM72Note 1	—	√	√	—	√	√
	3	PM73	P73	PU73	—	—	—	√	√	—	√	√
	4	PM74	P74	PU74	PIM74Note 2	POM74	—	√	√	—	√	—
	5	PM75	P75	PU75	—	—	—	√	√	—	—	—
	6	PM76	P76	PU76	—	—	—	√	—	—	—	—
	7	PM77	P77	PU77	—	—	—	√	—	—	—	—
Port 12	0	PM120	P120	PU120	—	—	PMC120	√	√	√	√	—
	1	—	P121	—	—	—	—	√	√	√	√	√
	2	—	P122	—	—	—	—	√	√	√	√	√
	3	—	P123	—	—	—	—	√	√	√	—	—
	4	—	P124	—	—	—	—	√	√	√	—	—
	5	—	—	—	—	—	—	—	—	—	—	—
	6	—	—	—	—	—	—	—	—	—	—	—
	7	—	—	—	—	—	—	—	—	—	—	—
Port 13	0	—	P130	—	—	—	—	√	√	—	—	—
	1	—	—	—	—	—	—	—	—	—	—	—
	2	—	—	—	—	—	—	—	—	—	—	—
	3	—	—	—	—	—	—	—	—	—	—	—
	4	—	—	—	—	—	—	—	—	—	—	—
	5	—	—	—	—	—	—	—	—	—	—	—
	6	—	—	—	—	—	—	—	—	—	—	—
	7	—	P137	—	—	—	—	√	√	√	√	√
Port 14	0	PM140	P140	PU140	—	—	—	√	√	—	—	—
	1	PM141	P141	PU141	—	—	—	√	—	—	—	—
	2	—	—	—	—	—	—	—	—	—	—	—
	3	—	—	—	—	—	—	—	—	—	—	—
	4	—	—	—	—	—	—	—	—	—	—	—
	5	—	—	—	—	—	—	—	—	—	—	—
	6	PM146	P146	PU146	—	—	—	√	√	—	—	—
	7	PM147	P147	PU147	—	—	PMC147	√	√	√	√	√

Note 1. For 24-pin products

Note 2. For 32-pin products

4.3.1 Port mode registers (PMxx)

These registers specify input or output mode for the port in 1-bit units.

These registers can be set by a 1-bit or 8-bit memory manipulation instruction.

Reset signal generation sets these registers to FFH.

When port pins are used as alternate-function pins, set the port mode register by referencing **4.5 Register Settings When Using Alternate Function**.

Figure 4 - 1 Format of Port mode register

Symbol	7	6	5	4	3	2	1	0	Address	After reset	R/W
PM0	1	PM06	PM05	PM04	PM03	PM02	PM01	PM00	FFF20H	FFH	R/W
PM1	PM17	PM16	PM15	PM14	PM13	PM12	PM11	PM10	FFF21H	FFH	R/W
PM2	PM27	PM26	PM25	PM24	PM23	PM22	PM21	PM20	FFF22H	FFH	R/W
PM3	1	1	1	1	1	1	PM31	PM30	FFF23H	FFH	R/W
PM4	1	1	1	1	PM43	PM42	PM41	PM40	FFF24H	FFH	R/W
PM5	1	1	PM55	PM54	PM53	PM52	PM51	PM50	FFF25H	FFH	R/W
PM6	1	1	1	1	PM63	PM62	PM61	PM60	FFF26H	FFH	R/W
PM7	PM77	PM76	PM75	PM74	PM73	PM72	PM71	PM70	FFF27H	FFH	R/W
PM12	1	1	1	1	1	1	1	PM120	FFF2CH	FFH	R/W
PM14	PM147	PM146	1	1	1	1	PM141	PM140	FFF2EH	FFH	R/W

PMmn	Pmn pin I/O mode selection (m = 0 to 7, 12, 14; n = 0 to 7)
0	Output mode (the pin functions as an output port (output buffer on))
1	Input mode (the pin functions as an input port (output buffer off))

Caution Be sure to set bits that are not mounted to their initial values.

4.3.2 Port registers (Pxx)

These registers set the output latch value of a port.

If the data is read in the input mode, the pin level is read. If it is read in the output mode, the output latch value is read [Note].

These registers can be set by a 1-bit or 8-bit memory manipulation instruction.

Reset signal generation clears these registers to 00H.

Note When P02, P03, P10, P11, P12 to P14, P20 to P27, P120, and P147 are set to the analog function, if a port is read in input mode, the read value is always 0, not the pin level.

Figure 4 - 2 Format of Port register

Symbol	7	6	5	4	3	2	1	0	Address	After reset	R/W
P0	0	P06	P05	P04	P03	P02	P01	P00	FFF00H	00H (output latch)	R/W
P1	P17	P16	P15	P14	P13	P12	P11	P10	FFF01H	00H (output latch)	R/W
P2	P27	P26	P25	P24	P23	P22	P21	P20	FFF02H	00H (output latch)	R/W
P3	0	0	0	0	0	0	P31	P30	FFF03H	00H (output latch)	R/W
P4	0	0	0	0	P43	P42	P41	P40	FFF04H	00H (output latch)	R/W
P5	0	0	P55	P54	P53	P52	P51	P50	FFF05H	00H (output latch)	R/W
P6	0	0	0	0	P63	P62	P61	P60	FFF06H	00H (output latch)	R/W
P7	P77	P76	P75	P74	P73	P72	P71	P70	FFF07H	00H (output latch)	R/W
P12	0	0	0	P124	P123	P122	P121	P120	FFF0CH	Undefined	R/W [Note 1]
P13	P137	0	0	0	0	0	0	P130	FFF0DH	[Note 2]	R/W[Note 1]
P14	P147	P146	0	0	0	0	P141	P140	FFF0EH	00H (output latch)	R/W

Pmn	m = 0 to 7, 12 to 14; n = 0 to 7	
	Output data control (in output mode)	Input data read (in input mode)
0	Output 0	Input low level
1	Output 1	Input high level

Note 1. P121 to P124, and P137 are read-only.

Note 2. P137: Undefined
P130: 0 (output latch)

Caution **Be sure to set bits that are not mounted to their initial values.**

4.3.3 Pull-up resistor option registers (PUxx)

These registers specify whether the on-chip pull-up resistors are to be used or not. On-chip pull-up resistors can be used in 1-bit units only for the bits set to input mode (PMmn = 1 and POMmn = 0) for the pins to which the use of an on-chip pull-up resistor has been specified in these registers. On-chip pull-up resistors cannot be connected to bits set to output mode and bits used as alternate-function output pins, regardless of the settings of these registers. Similarly, on-chip pull-up resistors cannot be connected to the pins used as alternate-function output pins and the pins set to the analog function.

These registers can be set by a 1-bit or 8-bit memory manipulation instruction.

Reset signal generation clears these registers to 00H (Only PU4 is set to 01H).

Figure 4 - 3 Format of Pull-up resistor option register

Symbol	7	6	5	4	3	2	1	0	Address	After reset	R/W
PU0	0	PU06	PU05	PU04	PU03	PU02	PU01	PU00	F0030H	00H	R/W
PU1	PU17	PU16	PU15	PU14	PU13	PU12	PU11	PU10	F0031H	00H	R/W
PU3	0	0	0	0	0	0	PU31	PU30	F0033H	00H	R/W
PU4	0	0	0	0	PU43	PU42	PU41	PU40	F0034H	01H	R/W
PU5	0	0	PU55	PU54	PU53	PU52	PU51	PU50	F0035H	00H	R/W
PU7	PU77	PU76	PU75	PU74	PU73	PU72	PU71	PU70	F0037H	00H	R/W
PU12	0	0	0	0	0	0	0	PU120	F003CH	00H	R/W
PU14	PU147	PU146	0	0	0	0	PU141	PU140	F003EH	00H	R/W

PUmn	Pmn pin on-chip pull-up resistor selection (m = 0, 1, 3 to 5, 7, 12, 14; n = 0 to 7)
0	On-chip pull-up resistor not connected
1	On-chip pull-up resistor connected

Caution Be sure to set bits that are not mounted to their initial values.

4.3.4 Port input mode registers (PIMxx)

These registers set the input buffer in 1-bit units.

TTL input buffer can be selected during serial communication with an external device of the different potential.

Port input mode registers can be set by a 1-bit or 8-bit memory manipulation instruction.

Reset signal generation clears these registers to 00H.

Figure 4 - 4 Format of Port input mode register

Symbol	7	6	5	4	3	2	1	0	Address	After reset	R/W
PIM0	0	0	0	PIM04	PIM03	0	PIM01	PIM00 Note 1	F0040H	00H	R/W
PIM1	PIM17	PIM16	PIM15	PIM14	0	0	0	PIM10	F0041H	00H	R/W
PIM3	0	0	0	0	0	0	PIM31 Note 2	PIM30	F0043H	00H	R/W
PIM5	0	0	PIM55	0	0	0	0	PIM50	F0045H	00H	R/W
PIM7	0	0	0	PIM74 Note 2	0	PIM72 Note 1	0	0	F0047H	00H	R/W

PIMmn	Pmn pin input buffer selection (m = 0, 1, 3, 5, 7; n = 0 to 7)
0	Normal input buffer
1	TTL input buffer

Note 1. For 24-pin products

Note 2. For 32-pin products

Caution **Be sure to set bits that are not mounted to their initial values.**

4.3.5 Port output mode registers (POMxx)

These registers set the output mode in 1-bit units.

N-ch open-drain output (V_{DD} tolerance[Note 1]/EV_{DD} tolerance[Note 2]) mode can be selected during serial communication with an external device of the different potential, and for the SDA00, SDA01, SDA10, SDA11, SDA20, and SDA21 pins during simplified I^2C communication with an external device of the same potential.

In addition, POMxx register is set with PUxx register, whether or not to use the on-chip pull-up resistor.

These registers can be set by a 1-bit or 8-bit memory manipulation instruction.

Reset signal generation clears these registers to 00H.

Note 1. For 24, 32, and 48-pin products

Note 2. For 36 and 64-pin products

Caution An on-chip pull-up resistor is not connected to a bit for which N-ch open drain output (V_{DD} tolerance [Note 1]/EV_{DD} tolerance [Note 2]) mode is set.

Figure 4 - 5 Format of Port output mode register

Symbol	7	6	5	4	3	2	1	0	Address	After reset	R/W
POM0	0	0	0	POM04	POM03	POM02	POM01 Note 1	POM00	F0050H	00H	R/W
POM1	POM17	0	POM15	POM14	POM13	0	POM11	POM10	F0051H	00H	R/W
POM3	0	0	0	0	0	0	POM31 Note 2	POM30	F0053H	00H	R/W
POM5	0	0	POM55	0	0	0	POM51	POM50	F0055H	00H	R/W
POM7	0	0	0	POM74	0	POM72 Note 1	POM71	0	F0057H	00H	R/W

POMmn	Pmn pin output mode selection (m = 0, 1, 3, 5, 7; n = 0 to 5, 7)
0	Normal output mode
1	N-ch open-drain output (V_{DD} tolerance[Note 1]/EV_{DD} tolerance[Note 2]) mode

<R> **Note 1.** For 24-pin product

<R> **Note 2.** For 32-pin product

Caution Be sure to set bits that are not mounted to their initial values.

4.3.6 Port mode control registers (PMCxx)

These registers set the P00 to P03, P10 to P14, P20 to P27, P120, and P147 digital I/O/analog input in 1-bit units.

The PMC0, PMC1, PMC2, PMC12, and PMC14 registers can be set by a 1-bit or 8-bit memory manipulation instruction.

Reset signal generation clears these registers to FFH.

Figure 4 - 6 Format of Port mode control register

Symbol	7	6	5	4	3	2	1	0	Address	After reset	R/W
PMC0	1	1	1	1	PMC03	PMC02	PMC01 Note 1	PMC00 Note 1	F0060H	FFH	R/W
PMC1	1	1	1	PMC14 Note 2	PMC13 Note 2	PMC12 Note 2	PMC11	PMC10	F0061H	FFH	R/W
PMC2	PMC27	PMC26	PMC25	PMC24	PMC23	PMC22	PMC21	PMC20	F0062H	FFH	R/W
PMC12	1	1	1	1	1	1	1	PMC120	F006CH	FFH	R/W
PMC14	PMC147	1	1	1	1	1	1	1	F006EH	FFH	R/W

PMCmn	Pmn pin digital I/O/analog input selection (m = 0, 1, 2, 12, 14; n = 0 to 7)
0	Digital I/O (alternate function other than analog input)
1	Analog input

Note 1. 24, 32, 36, and 48-pin products only

Note 2. 32, 36, 48, and 64-pin products only

Caution Be sure to set bits that are not mounted to their initial values.

4.3.7 Peripheral I/O redirection register 0 (PIOR0)

This register is used to specify whether to enable or disable the peripheral I/O redirect function.

This function is used to switch ports to which alternate functions are assigned.

In addition, the settings for redirection can be changed only until operation of the function is enabled.

The PIOR0 register can be set by an 8-bit memory manipulation instruction.

Reset signal generation sets this register to 00H.

Figure 4 - 7 Format of Peripheral I/O redirection register 0 (PIOR0)

Address: F0077H After reset: 00H R/W

Symbol	7	6	5	4	3	2	1	0
PIOR0	PIOR07 Note 1	PIOR06 Note 2	PIOR05 Note 3	PIOR04 Note 1	PIOR03 Note 4	PIOR02	PIOR01 Note 5	PIOR00 Note 6

Bit	Function	64-pin		48-pin		36-pin		32-pin		24-pin	
		Setting value		Setting value		Setting value		Setting value		Setting value	
		0	1	0	1	0	1	0	1	0	1
PIOR07 Note 1	INTP8	Note 6	P00								
	INTP10	Note 7	P01								
	INTP11	Note 7	P20								
PIOR06 Note 2	RxD2	This area cannot be used (controlled in PIOR01). Be set to 0 (default value).		P14	P14	P14	P14	P14	P14	P14	P14
	TxD2			P13	P10	P13	P10	P13	P10	P13	P10
	SCL20			P15	—	P15	—	P15	—	P15	—
	SDA20			P14	—	P14	—	P14	—	P14	—
	SI20			P14	—	P14	—	P14	—	P14	—
	SO20			P13	—	P13	—	P13	—	P13	—
	SCK20			P15	—	P15	—	P15	—	P15	—
PIOR05 Note 3	RxD1	This area cannot be used. Be set to 0 (default value).		P01	P73	This area cannot be used. Be set to 0 (default value).		P01	P73	P01	P73
	TxD1			P00	P72			P00	P72	P00	P72
PIOR04 Note 1	PCLBUZ1	P141	P55	This area cannot be used. Be set to 0 (default value).							
	INTP5	P16	P12								
PIOR03 Note 4	PCLBUZ0	P140	P31	P140	P31	This area cannot be used. Be set to 0 (default value).					
PIOR02	SCLA0	P60	P14	P60	P14	P60	P14	P31	P14	P01	P14
	SDAA0	P61	P15	P61	P15	P61	P15	P74	P15	P00	P15
PIOR01 Note 5	INTP10	P76	P05	P01	P01	P01	P01	P01	P01	This area cannot be used. Be set to 0 (default value).	
	INTP11	P77	P06	P20	P20	P20	P20	P20	P20		
	RxD2	P14	P76	This area cannot be used (controlled in PIOR06). Be set to 0 (default value).							
	TxD2	P13	P77								
	SCL20	P15	—								
	SDA20	P14	—								
	SI20	P14	—								
	SO20	P13	—								
	SCK20	P15	—								
	TxD0	P51	P17	P51	P17	P51	P17	P51	P17		
	RxD0	P50	P16	P50	P16	P50	P16	P50	P16		
	SCL00	P30	—	P30	—	P30	—	P30	—		
	SDA00	P50	—	P50	—	P50	—	P50	—		
	SI00	P50	P16	P50	—	P50	—	P50	—		
<R>	SO00	P51	P17	P51	—	P51	—	P51	—		
<R>	SCK00	P30	P55	P30	—	P30	—	P30	—		
PIOR00 Note 1	INTP1	P50	P52	This area cannot be used. Be set to 0 (default value).							
	INTP2	P51	P53								
	INTP3	P30	P54								
	INTP4	P31	P55								
	INTP8	P74	P42								
	INTP9	P75	P43								

Note 1. 64-pin products only
Note 2. 24, 32, 36, and 48-pin products only
Note 3. 24, 32, and 48-pin products only
Note 4. 48 and 64-pin products only
Note 5. 32, 36, 48, and 64-pin products only
Note 6. Pin specified by PIOR00
Note 7. Pin specified by PIOR01

Remark —: Cannot be used for alternate function pin

4.3.8 Peripheral I/O redirection register 1 (PIOR1)

This register is used to specify whether to enable or disable the peripheral I/O redirect function.
This function is used to switch ports to which alternate functions are assigned.
In addition, the settings for redirection can be changed only until operation of the function is enabled.
The PIOR1 register can be set by an 8-bit memory manipulation instruction.
Reset signal generation sets this register to 00H.

Figure 4 - 8 Format of Peripheral I/O redirection register 1 (PIOR1)

Address: F0079H After reset: 00H R/W

Symbol	7	6	5	4	3	2	1	0
PIOR1	0	0	0	0	PIOR13	PIOR12	PIOR11	PIOR10

PIOR13	PIOR12	Timer RJ TRJO0 pin select
0	0	Multiplexed with P30 (for 32, 36, 48, and 64-pin products) Multiplexed with P72 (for 24-pin products)
0	1	Multiplexed with P50
1	0	Multiplexed with P00
1	1	Setting prohibited

PIOR11	PIOR10	Timer RJ TRJIO0 pin select
0	0	Multiplexed with P01
0	1	Multiplexed with P31 (for 32, 36, 48, and 64-pin products) Multiplexed with P73 (for 24-pin products)
1	0	Multiplexed with P41 (for 48 and 64-pin products) Setting prohibited (for 24, 32, and 36-pin products)
1	1	Multiplexed with P06 (for 64-pin products) Setting prohibited (for 24, 32, 36, and 48-pin products)

4.3.9 Peripheral I/O redirection register 2 (PIOR2)

This register is used to specify whether to enable or disable the peripheral I/O redirect function.

This function is used to switch ports to which alternate functions are assigned.

In addition, the settings for redirection can be changed only until operation of the function is enabled.

The PIOR2 register can be set by an 8-bit memory manipulation instruction.

Reset signal generation sets this register to 00H.

Figure 4 - 9 Format of Peripheral I/O redirection register 2 (PIOR2)

Address: F0075H After reset: 00H R/W

Symbol	7	6	5	4	3	2	1	0
PIOR2	PIOR27[Note 1]	PIOR26[Note 2]	PIOR25	PIOR24	PIOR23[Note 2]	PIOR22[Note 2]	PIOR21	PIOR20

Bit	Function	64-pin		48-pin		36-pin		32-pin		24-pin	
		Setting value		Setting value		Setting value		Setting value		Setting value	
		0	1	0	1	0	1	0	1	0	1
PIOR27[Note 1]	TRDIOC0	This area cannot be used. Be set to 0 (default value).								—	P13
PIOR26[Note 2]	TRDIOD0	P14	P17	P14	P17	P14	P17	P14	P17	This area cannot be used. Be set to 0 (default value).	
PIOR25	TRDIOD1	P10	P51	P10	P51	P10	P51	P10	P51	P10	P51
PIOR24	TRDIOC1	P11	P50	P11	P50	P11	P50	P11	P50	P11	P50
PIOR23[Note 2]	TRDIOB1	P12	P30	P12	P30	P12	P30	P12	P30	This area cannot be used. Be set to 0 (default value).	
PIOR22[Note 2]	TRDIOA1	P13	P16	P13	P16	P13	P16	P13	P16		
PIOR21[Note 3]	VCOUT1	P31	P70	P31	P70	P31	P70	P31	P70	P147	P72
PIOR20[Note 4]	VCOUT0	P120	P71	P120	P71	P120	P70	P120	P73	P12	P73

Note 1. 24-pin products only

Note 2. 32, 36, 48, and 64-pin products only

Note 3. This is the setting in PIOR32 = 1. In PIOR32 = 0, VCOUT1 output is disabled (fixed to low level). Pin specified by PIOR01

Note 4. This is the setting in PIOR31 = 1. In PIOR31 = 0, VCOUT0 output is disabled (fixed to low level). Pin specified by PIOR01

Remark —: Cannot be used for alternate function pin

4.3.10 Peripheral I/O redirection register 3 (PIOR3)

This register is used to specify whether to enable or disable the peripheral I/O redirect function.

This function is used to switch ports to which alternate functions are assigned.

In addition, the settings for redirection can be changed only until operation of the function is enabled.

The PIOR3 register can be set by an 8-bit memory manipulation instruction.

Reset signal generation sets this register to 00H.

Figure 4 - 10 Format of Peripheral I/O redirection register 3 (PIOR3)

Address: F007CH After reset: 00H R/W

Symbol	7	6	5	4	3	2	1	0
PIOR3	0	0	0	0	0	PIOR32	PIOR31	PIOR30[Note 1]

PIOR32	Comparator VCOUT1 pin output enabled/disabled
0	VCOUT1 output to port pins is disabled (fixed to low level)
1	VCOUT1 output to port pins is enabled (output from pins specified in PIOR21 bit)

PIOR31	Comparator VCOUT0 pin output enabled/disabled
0	VCOUT0 output to port pins is disabled (fixed to low level)
1	VCOUT0 output to port pins is enabled (output from pins specified in PIOR20 bit)

PIOR30[Note 1]	IrRxD and IrTxD pins of IrDA select[Note 2]
0	IrRxD is multiplexed with the P14 pin, and IrTxD is multiplexed with the P13 pin.
1	IrRxD is multiplexed with the P01 pin, and IrTxD is multiplexed with the P00 pin.

Note 1. 24-pin products only

Note 2. This is the setting in PIOR06 = 0. In PIOR06 = 1, IrDA is disabled.

The assignment of the redirect function when UART2 or IrDA is used is listed.

Figure 4 - 11 Assignment of the redirect function when using UATR2 or IrDA

<64-pin products>

PIOR01	RxD2 and TxD2 pins of UART2, IrRxD and IrTxD pins of IrDA select
0	RxD2/IrRxD is multiplexed with the P14 pin, and TxD2/IrTxD is multiplexed with the P13 pin.
1	RxD2 is multiplexed with the P76 pin, TxD2 is multiplexed with the P77 pin, and IrRxD and IrTxD are disabled.

<48, 36, 32-pin products>

PIOR06	RxD2 and TxD pins of UART2, IrRxD and IrTxD pins of IrDA select
0	RxD2/IrRxDis multiplexed with the P14 pin, and TxD2/IrTxD is multiplexed with the P13 pin.
1	RxD2 is multiplexed with the P14 pin, TxD2 is multiplexed with the P10 pin, and IrRxD and IrTxD are disabled.

<24-pin products>

<R>

PIOR06	PIOR30	RxD2 and TxD2 pins of UART2, IrRxD and IrTxD pins of IrDA select
0	0	RxD2/IrRxD is multiplexed with the P14 pin, and TxD2/IrTxD is multiplexed with the P13 pin.
0	1	RxD2 and TxD2 are disabled, IrRxD is multiplexed with the P01 pin, and IrTxD is multiplexed with the P00 pin[Note]
1	0	RxD2 is multiplexed with the P14 pin, TxD2 is multiplexed with the P10 pin, and IrRxD and IrTxD are disabled.
1	1	Setting prohibited

Note CSI20 and IIC20 are also disabled.

4.3.11 Global digital input disable register (GDIDIS)

This register is used to prevent through-current flowing to the input buffers of input ports which use EVDD as the power supply when the EVDD power supply is turned off.
When not all of the I/O ports using EVDD as the power supply are used, low power consumption can be achieved by setting the GDIDIS register (setting the GDIDIS0 bit to 1) to turn off the EVDD power supply.
By setting the GDIDIS0 bit to 1, input to any input buffer using EVDD as the power supply is prohibited, preventing through-current from flowing when the EVDD power supply is turned off.
The GDIDIS register can be set by a 1-bit or 8-bit memory manipulation instruction.
Reset signal generation sets this register to 00H.

Remark The GDIDIS register is equipped with 64 and 36-pin products.

Figure 4 - 12 Format of Global digital input disable register (GDIDIS)

Address: F007DH After reset: 00H R/W

Symbol	7	6	5	4	3	2	1	0
GDIDIS	0	0	0	0	0	0	0	GDIDIS0

GDIDIS0	Setting of input buffers using EVDD power supply
0	Input to input buffers permitted (default)
1	Input to input buffers prohibited. No through-current flows to the input buffers.

Turn off the EVDD power supply with the following procedure.
1. Prohibit input to input buffers (set GDIDIS0 = 1).
2. Turn off the EVDD power supply.

Turn on again the EVDD power supply with the following procedure.
1. Turn on the EVDD power supply.
2. Permit input to input buffers (set GDIDIS0 = 0).

Caution 1. Do not input an input voltage equal to or greater than EVDD to an input port that uses EVDD as the power supply.

Caution 2. When input to input buffers is prohibited (GDIDIS0 = 1), the value read from the port register (Pxx) of a port that uses EVDD as the power supply is "1". When "1" is set in the port output mode register (POMxx) (N-ch open drain output (EVDD tolerance) mode), the value read from the port register (Pxx) is "0".

Remark 1. The GDIDIS register is equipped with 64 and 36-pin products.

Remark 2. Even when input to input buffers is prohibited (GDIDIS0 = 1), peripheral functions which do not use port functions having EVDD as the power supply can be used.

4.4 Port Function Operations

Port operations differ depending on whether the input or output mode is set, as shown below.

4.4.1 Writing to I/O port

(1) Output mode

A value is written to the output latch by a transfer instruction, and the output latch contents are output from the pin.

Once data is written to the output latch, it is retained until data is written to the output latch again.

The data of the output latch is cleared when a reset signal is generated.

(2) Input mode

A value is written to the output latch by a transfer instruction, but since the output buffer is off, the pin status does not change.

Once data is written to the output latch, it is retained until data is written to the output latch again.

The data of the output latch is cleared when a reset signal is generated.

4.4.2 Reading from I/O port

(1) Output mode

The output latch contents are read by a transfer instruction. The output latch contents do not change.

(2) Input mode

The pin status is read by a transfer instruction. The output latch contents do not change.

4.4.3 Operations on I/O port

(1) Output mode

An operation is performed on the output latch contents, and the result is written to the output latch. The output latch contents are output from the pins.

Once data is written to the output latch, it is retained until data is written to the output latch again.

The data of the output latch is cleared when a reset signal is generated.

(2) Input mode

The pin level is read and an operation is performed on its contents. The result of the operation is written to the output latch, but since the output buffer is off, the pin status does not change. Therefore, byte data can be written to the ports used for both input and output.

The data of the output latch is cleared when a reset signal is generated.

4.4.4 Handling different potential (1.8 V, 2.5 V, 3 V) by using EVDD ≤ VDD

When connecting an external device operating on a different potential (1.8 V, 2.5 V or 3 V), it is possible to connect the I/O pins of general ports by changing EV_{DD} to accord with the power supply of the connected device.

4.4.5 Handling different potential (1.8 V, 2.5 V, 3 V) by using I/O buffers

It is possible to connect an external device operating on a different potential (1.8 V, 2.5 V or 3 V) by switching I/O buffers with the port input mode register (PIMxx) and port output mode register (POMxx).
When receiving input from an external device with a different potential (1.8 V, 2.5 V or 3 V), set the port input mode registers 0, 1, 3, 5, and 7 (PIM0, PIM1, PIM3, PIM5, and PIM7) on a bit-by-bit basis to enable normal input (CMOS)/TTL input buffer switching.
When outputting data to an external device with a different potential (1.8 V, 2.5 V or 3 V), set the port output mode registers 0, 1, 3, 5, and 7 (POM0, POM1, POM3, POM5, and POM7) on a bit-by-bit basis to enable normal output (CMOS)/N-ch open drain (V_{DD} tolerance[Note 1]/EV_{DD} tolerance[Note 2]) switching.

Note 1. For 24, 32, and 48-pin products
Note 2. For 36 and 64-pin products

The connection of a serial interface is described in the following.

(1) Setting procedure when using input pins of UART0 to UART2, CSI00, CSI01, CSI10, CSI11, CSI20, and CSI21 functions for the TTL input buffer

<Example of 64-pin products>

In case of UART0:	P50 (P16)
In case of UART1:	P03
In case of UART2:	P14 (P76)
In case of CSI00:	P30, P50 (P55, P16)
In case of CSI01:	P74, P75
In case of CSI10:	P03, P04
In case of CSI11:	P10, P11
In case of CSI20:	P14, P15
In case of CSI21:	P70, P71

Remark Functions in parentheses can be assigned via settings in the peripheral I/O redirection register 0 (PIOR0).

<1> Using an external resistor, pull up the pin to be used to the power supply of the target device (on-chip pull-up resistor cannot be used).
<2> Set the corresponding bit of the PIM0, PIM1, PIM3, PIM5, and PIM7 registers to 1 to switch to the TTL input buffer. For V_{IH} and V_{IL}, refer to the DC characteristics when the TTL input buffer is selected.
<3> Enable the operation of the serial array unit and set the mode to the UART/Simplified SPI (CSI[Note]) mode.

Note Although the CSI function is generally called SPI, it is also called CSI in this product, so it is referred to as such in this manual.

(2) Setting procedure when using output pins of UART0 to UART2, CSI00, CSI01, CSI10, CSI11, CSI20, and CSI21 functions in N-ch open-drain output mode

In case of UART0:	P51 (P17)
In case of UART1:	P02
In case of UART2:	P13 (P77)
In case of CSI00:	P30, P51 (P55, P17)
In case of CSI01:	P73, P75
In case of CSI10:	P02, P04
In case of CSI11:	P10, P12
In case of CSI20:	P13, P15
In case of CSI21:	P70, P72

Remark Functions in parentheses can be assigned via settings in the peripheral I/O redirection register 0 (PIOR0).

<1> Using an external resistor, pull up the pin to be used to the power supply of the target device (on-chip pull-up resistor cannot be used).
<2> After reset release, the port mode is the input mode (Hi-Z).
<3> Set the output latch of the corresponding port to 1.
<4> Set the corresponding bit of the POM0, POM1, POM3, POM5, and POM7 registers to 1 to set the N-ch open drain output (V_{DD} tolerance[Note 1]/EV_{DD} tolerance[Note 2]) mode.
<5> Enable the operation of the serial array unit and set the mode to the UART/Simplified SPI (CSI) mode.
<6> Set the corresponding bit of the PM0, PM1, PM3, PM5, and PM7 registers to the output mode. At this time, the output data is high level, so the pin is in the Hi-Z state.

Note 1. For 24, 32, and 48-pin products
Note 2. For 36 and 64-pin products

(3) Setting procedure when using I/O pins of IIC00, IIC01, IIC10, IIC11, IIC20, and IIC21 functions with a different potential (1.8 V, 2.5 V, 3 V)

In case of simplified IIC00: P30, P50
In case of simplified IIC01: P74, P75
In case of simplified IIC10: P03, P04
In case of simplified IIC11: P10, P11
In case of simplified IIC20: P14, P15
In case of simplified IIC21: P70, P71

Remark Functions in parentheses can be assigned via settings in the peripheral I/O redirection register 0 (PIOR0).

<1> Using an external resistor, pull up the pin to be used to the power supply of the target device (on-chip pull-up resistor cannot be used).
<2> After reset release, the port mode is the input mode (Hi-Z).
<3> Set the output latch of the corresponding port to 1.
<4> Set the corresponding bit of the POM0, POM1, POM3, POM5, and POM7 registers to 1 to set the N-ch open drain output (V_{DD} tolerance[Note 1]/EV_{DD} tolerance[Note 2]) mode.
<5> Set the corresponding bit of the PIM0, PIM1, PIM3, PIM5, and PIM7 registers to 1 to switch to the TTL input buffer. For V_{IH} and V_{IL}, refer to the DC characteristics when the TTL input buffer is selected.
<6> Enable the operation of the serial array unit and set the mode to the simplified I^2C mode.
<7> Set the corresponding bit of the PM0, PM1, PM3, PM5, and PM7 registers to the output mode (data I/O is possible in the output mode). At this time, the output data is high level, so the pin is in the Hi-Z state.

Note 1. For 24, 32, and 48-pin products
Note 2. For 36 and 64-pin products

4.5 Register Settings When Using Alternate Function

4.5.1 Basic concept when using alternate function

In the beginning, for a pin also assigned to be used for analog function, use the port mode control register (PMCxx) to specify whether to use the pin for analog function or digital input/output.

Figure 4 - 13 shows the basic configuration of an output circuit for pins used for digital input/output. The output of the output latch for the port and the output of the alternate SAU function are input to an AND gate. The output of the AND gate is input to an OR gate. The output of an alternate function other than SAU (Timer, RTC, clock/buzzer output, IICA, etc.) is connected to the other input pin of the OR gate. When such kind of pins are used by the port function or an alternate function, the unused alternate function must not hinder the output of the function to be used. An idea of basic settings for this kind of case is shown in Table 4 - 7.

Figure 4 - 13 Basic Configuration of Output Circuit for Pins

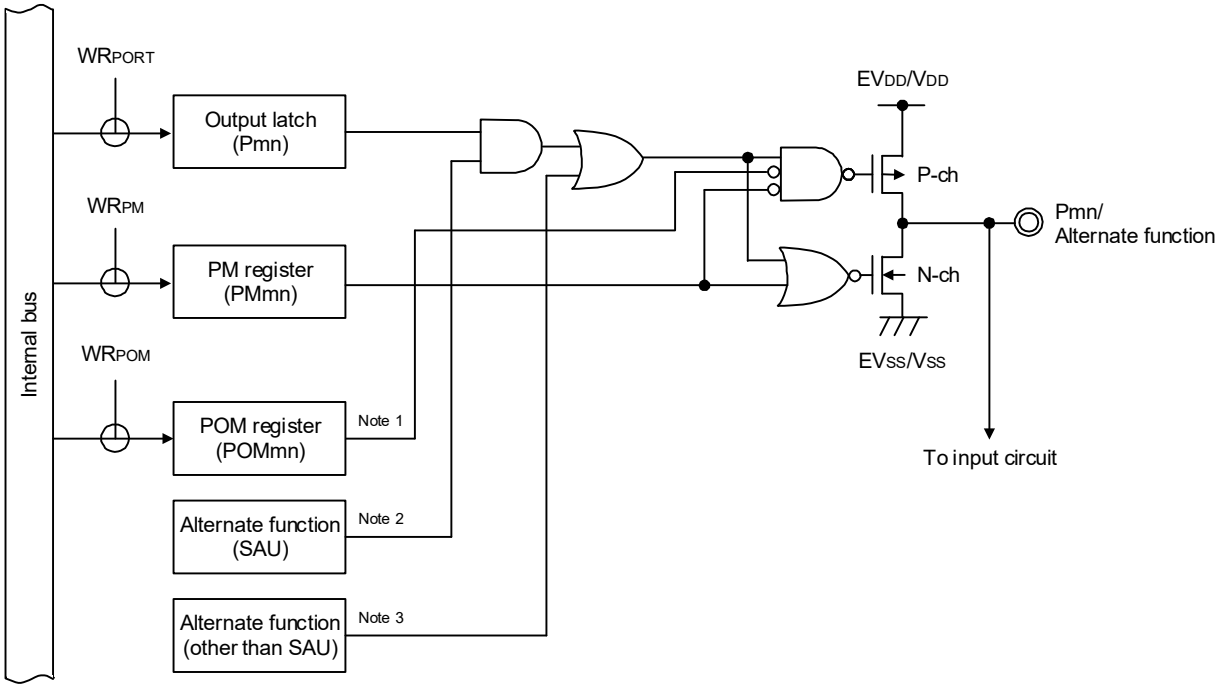

Note 1. When there is no POM register, this signal should be considered to be low level (0).

Note 2. When there is no alternate function, this signal should be considered to be high level (1).

Note 3. When there is no alternate function, this signal should be considered to be low level (0).

Table 4 - 7 Concept of Basic Settings

Output Function of Used Pin	Output Settings of Unused Alternate Function		
	Output Function for Port	Output Function for SAU	Output Function for other than SAU
Output function for port	—	Output is high (1)	Output is low (0)
Output function for SAU	High (1)	—	Output is low (0)
Output function for other than SAU	Low (0)	Output is high (1)	Output is low (0) Note

Note Since more than one output function other than SAU may be assigned to a single pin, the output of an unused alternate function must be set to low level (0). For details on the setting method, see **4.5.2 Register settings for alternate function whose output function is not used**.

4.5.2 Register settings for alternate function whose output function is not used

When the output of an alternate function of the pin is not used, the following settings should be made. Note that when the peripheral I/O redirection function is the target, the output can be switched to another pin by setting the peripheral I/O redirection registers 0 to 3 (PIOR0 to PIOR3). This allows usage of the port function or other alternate function assigned to the target pin.

(1) SOp = 1, TxDq = IrTxD = 1 (settings when the serial output (SOp/TxDq) of SAU is not used)
When the serial output (SOp/TxDq) is not used, such as, a case in which only the serial input of SAU is used, set the bit in serial output enable register m (SOEm) which corresponds to the unused output to 0 (output disabled) and set the SOmn bit in serial output register m (SOm) to 1 (high). These are the same settings as the initial state.

(2) SCKp = 1, SDAr = 1, SCLr = 1 (settings when channel n in SAU is not used)
When SAU is not used, set bit n (SEmn) in serial channel enable status register m (SEm) to 0 (operation stopped state), set the bit in serial output enable register m (SOEm) which corresponds to the unused output to 0 (output disabled), and set the SOmn and CKOmn bits in serial output register m (SOm) to 1 (high). These are the same settings as the initial state.

(3) TOmn = 0 (settings when the output of channel n in TAU is not used)
When the TOmn output of TAU is not used, set the bit in timer output enable register 0 (TOE0) which corresponds to the unused output to 0 (output disabled) and set the bit in timer output register 0 (TO0) to 0 (low). These are the same settings as the initial state.

(4) SDAAn = 0, SCLAn = 0 (setting when IICA is not used)
When IICA is not used, set the IICEn bit in IICA control register n0 (IICCTLn0) to 0 (operation stopped). This is the same setting as the initial state.

(5) PCLBUZn = 0 (setting when clock/buzzer output is not used)
When the clock/buzzer output is not used, set the PCLOEn bit in clock output select register n (CKSn) to 0 (output disabled). This is the same setting as the initial state.

(6) TRJIO0 = 0/TRJO0 = 0 (setting when timer RJ output is not used)
When the pulse output function of timer RJ is not used with the TRJO0 pin, set bit 2 (TOENA) in the timer RJ I/O control register (TRJIOC0) to 0 (TRJO output disabled). This is the same setting as the initial state.
When the TRJIO0 pin of timer RJ is not used for the output function, set bits 2 to 0 (TMOD2 to TMOD0) in timer RJ mode register 0 (TRJMR0) to a value other than 001b (pulse output mode). The initial value is 000b (timer mode).

(7) TRDIOAn = 0/TRDIOBn = 0/TRDIOCn = 0/TRDIODn = 0 (setting when timer RD output is not used)
When the output function of timer RD is not used, set the pins not used for timer RD output function to “output disabled” using timer RD output master enable register 1 (TRDOER1). This is the same setting as the initial state.

(8) TRGIOA = 0/TRGIOB = 0 (setting when timer RG output is not used)
When the output function of timer RG is not used, set the pins not used for timer RG output function to “pin output by compare match is disabled” using the timer RG I/O control register (TRGIOR). This is the same setting as the initial state.

4.5.3 Register setting examples for used port and alternate functions

Register setting examples for used port and alternate functions (64-pin products) are shown in Tables 4 - 8 to 4 - 12. The registers used to control the port functions should be set as shown in Tables 4 - 8 to 4 - 12. See the following remark for legends used in Tables 4 - 8 to 4 - 12.

Remark —: Not supported
×: Don't care
PIORx: Peripheral I/O redirection register
POMxx: Port output mode register
PMCxx: Port mode control register
PMxx: Port mode register
Pxx: Port output latch
Functions in parentheses can be assigned via settings in the peripheral I/O redirection registers 0 to 3 (PIOR0 to PIOR3).

Table 4 - 8 Setting Examples of Registers When Using P00 to P17 Pin Function (64-pin Products) (1/4)

Pin Name	Used Function		PIORx	POMxx	PMCxx	PMxx	Pxx	Alternate Function Output	
	Function Name	I/O						SAU Output Function	Other than SAU
P00	P00	Input	—	×	—	1	×	×	—
		Output	×	0	—	0	0/1	—	(TRJO0) = 0
		Nch OD output		1	—	0	0/1		
	TRGCLKA	Input	—	×	—	1	×	×	—
<R>	TI00	Input	—	×	—	1	×	×	—
	(TRJO0)	Output	PIOR13, PIOR12 = 10B	0	—	0	0	—	—
	(INTP8)	Input	PIOR07 = 1	—	—	1	×	—	—
P01	P01	Input	—	—	—	1	×	—	—
		Output	×	—	—	0	0/1	—	TRJIO0 = 0
	TRGCLKB	Input	—	—	—	1	×	—	—
<R>	TO00	Output	×	—	—	0	0	—	—
	TRJIO0	Input	PIOR11, PIOR10 = 00B	—	—	1	×	—	—
		Output	—	—	—	0	0	—	—
	(INTP10)	Input	PIOR07 = 1	—	—	1	×	—	—
P02	P02	Input	—	×	0	1	×	×	—
		Output	×	0	0	0	0/1	TxD1/SO10 = 1	—
		Nch OD output		1	0	0	0/1		
	ANI17	Analog input	—	×	1	1	×	×	—
	TxD1	Output	—	0/1	0	0	1	—	—
	SO10	Output	—	0/1	0	0	1	—	—
	IVCMP10	Analog input	—	×	1	1	×	×	—
P03	P03	Input	—	×	0	1	×	×	—
		Output	×	0	0	0	0/1	SDA10 = 1	—
		Nch OD output		1	0	0	0/1		
	ANI16	Analog input	—	×	1	1	×	×	—
	SI10	Input	—	×	0	1	×	×	—
	RxD1	Input	—	×	0	1	×	×	—
	SDA10	I/O	—	1	0	0	1	—	—
	IVCMP11	Analog input	—	×	1	1	×	×	—

Table 4 - 8 Setting Examples of Registers When Using P00 to P17 Pin Function (64-pin Products) (2/4)

Pin Name	Used Function		PIORx	POMxx	PMCxx	PMxx	Pxx	Alternate Function Output	
	Function Name	I/O						SAU Output Function	Other than SAU
P04	P04	Input	—	×	—	1	×	—	—
		Output	×	0	—	0	0/1	SCK10/SCL10 = 1	—
		Nch OD output		1	—	0	0/1		
	SCK10	Input	—	×	—	1	×	—	—
		Output		0/1	—	0	1	—	—
	SCL10	Output	—	0/1	—	0	1	—	—
P05	P05	Input	—	—	—	1	×	—	—
		Output	—	—	—	0	0/1	—	—
	(INTP10)	Input	PIOR01 = 1	—	—	1	×	—	—
P06	P06	Input	—	—	—	1	×	—	—
		Output	×	—	—	0	0/1	—	(TRJIO0) = 0
	(TRJIO0)	Input	PIOR11, PIOR10 = 11B	—	—	1	×	—	—
		Output		—	—	0	0	—	—
	(INTP11)	Input	PIOR01 = 1	—	—	1	×	—	—
P10	P10	Input	—	×	0	1	×	—	
		Output	—	0	0	0	0/1	SCK11/SCL11 = 1	TRDIOD1 = 0
		Nch OD output		1	0	0	0/1		
	ANI20	Analog input	—	×	1	1	×	×	—
	SCK11	Input	—	×	0	1	×	—	—
		Output	—	0/1	0	0	1	—	TRDIOD1 = 0
	SCL11	Output	—	0/1	0	0	1	—	TRDIOD1 = 0
	TRDIOD1	Input	PIOR25 = 0	×	0	1	×	—	—
		Output		0	0	0	0	SCK11/SCL11 = 1	—
P11	P11	Input	—	×	0	1	×	—	
		Output	—	0	0	0	0/1	SDA11 = 1	TRDIOC1 = 0
		Nch OD output		1	0	0	0/1		
	ANI21	Analog input	—	×	1	1	×	×	—
	SI11	Input	—	×	0	1	×	—	—
	SDA11	I/O	—	1	0	0	1	—	TRDIOC1 = 0
	TRDIOC1	Input	PIOR24 = 0	×	0	1	×	—	—
		Output		0	0	0	0	SDA11 = 1	—
P12	P12	Input	—	—	0	1	×	—	—
		Output	—	—	0	0	0/1	SO11 = 1	TRDIOB1 = 0
	ANI22	Analog input	—	×	1	1	×	×	—
	SO11	Output	—	—	0	0	1	—	TRDIOB1 = 0
	TRDIOB1	Input	PIOR23 = 0	—	0	1	×	—	—
		Output		—	0	0	0	SO11 = 1	—
	(INTP5)	Input	PIOR04 = 1	—	0	1	×	—	—

Table 4 - 8 Setting Examples of Registers When Using P00 to P17 Pin Function (64-pin Products) (3/4)

Pin Name	Used Function		PIORx	POMxx	PMCxx	PMxx	Pxx	Alternate Function Output	
	Function Name	I/O						SAU Output Function	Other than SAU
P13	P13	Input	—	×	0	1	×	—	—
		Output	×	0	0	0	0/1	TxD2/SO20 = 1	TRDIOA1 = 0
		Nch OD output		1	0	0	0/1		
	ANI23	Analog input	—	×	1	1	×	×	—
	TxD2	Output	PIOR01 = 0	0/1	0	0	1	—	TRDIOA1 = 0
	SO20	Output	PIOR01 = 0	0/1	0	0	1	—	TRDIOA1 = 0
	TRDIOA1	Input	PIOR22 = 0	×	0	1	×	—	—
		Output		0	0	0	0	TxD2/SO20 = 1	—
	IVCMP1	Analog input	—	×	1	1	×	—	—
P14	P14	Input	—	×	0	1	×	—	—
		Output	×	0	0	0	0/1	SDA20 = 1	TRDIOD0 = 0, (SCLA0) = 0
		Nch OD output		1	0	0	0/1		
	ANI24	Analog input	—	×	1	1	×	×	—
	RxD2	Input	PIOR01 = 0	×	0	1	×	—	—
	SI20	Input	PIOR01 = 0	×	0	1	×	—	—
	SDA20	I/O	PIOR01 = 0	1	0	0	1	—	TRDIOD0 = 0, (SCLA0) = 0
	TRDIOD0	Input	PIOR26 = 0	×	0	1	×	—	—
		Output		0	0	0	0	SDA20 = 1	(SCLA0) = 0
	(SCLA0)	I/O	PIOR02 = 1	1	0	0	0	SDA20 = 1	TRDIOD0 = 0
P15	P15	Input	—	×	—	1	×	—	—
		Output	×	0	—	0	0/1	SCK20/SCL20 = 1	TRDIOB0 = 0, (SDAA0) = 0, PCLBUZ1 = 0
		Nch OD output		1	—	0	0/1		
	SCK20	Input	PIOR01 = 0	×	—	1	×	—	—
		Output		0/1	—	0	1	—	TRDIOB0 = 0, (SDAA0) = 0, PCLBUZ1 = 0
	SCL20	Output	PIOR01 = 0	0/1	—	0	1	—	
	TRDIOB0	Input	—	×	—	1	×	—	—
		Output	×	0	—	0	0	SCK20/SCL20 = 1	(SDAA0) = 0, PCLBUZ1 = 0
	(SDAA0)	I/O	PIOR02 = 1	1	—	0	0	SCK20/SCL20 = 1	TRDIOB0 = 0, PCLBUZ1 = 0

Table 4 - 8 Setting Examples of Registers When Using P00 to P17 Pin Function (64-pin Products) (4/4)

Pin Name	Used Function		PIORx	POMxx	PMCxx	PMxx	Pxx	Alternate Function Output	
	Function Name	I/O						SAU Output Function	Other than SAU
P16	P16	Input	—	—	—	1	×	—	—
		Output	—	—	—	0	0/1	—	TO01 = 0, TRDIOC0 = 0, (TRDIOA1) = 0
	TI01	Input	—	—	—	1	×	—	—
	TO01	Output	—	—	—	0	0	—	TRDIOC0 = 0, (TRDIOA1) = 0
	INTP5	Input	PIOR04 = 0	—	—	1	×	—	—
	TRDIOC0	Input	—	—	—	1	×	—	—
		Output	—	—	—	0	0	—	TO01 = 0, (TRDIOA1) = 0
	(SI00)	Input	PIOR01 = 1	—	—	1	×	—	—
	(RxD0)	Input	PIOR01 = 1, PIOR06 = 0	—	—	1	×	—	—
	(TRDIOA1)	Input	PIOR22 = 1	×	—	1	×	—	—
		Output		—	—	0	0	—	TO01 = 0, TRDIOC0 = 0
P17	P17	Input	—	×	—	1	×	—	—
		Output	×	0	—	0	0/1	(TxD0)/(SO00) = 1	TO02 = 0, TRDIOA0 = 0, (TRDIOD0) = 0
		Nch OD output		1	—	0	0/1		
	TI02	Input	—	×	—	1	×	—	—
	TO02	Output	×	0	—	0	0	(TxD0)/(SO00) = 1	TRDIOA0 = 0, (TRDIOD0) = 0
	TRDIOA0	Input	—	×	—	1	×	—	—
		Output	×	0	—	0	0	(TxD0)/(SO00) = 1	TO02 = 0, (TRDIOD0) = 0
	TRDCLK	Input	—	×	—	1	×	—	—
	(SO00)	Output	PIOR01 = 1	0/1	—	0	1	—	TO02 = 0, TRDIOA0 = 0, (TRDIOD0) = 0
	(TxD0)	Output	PIOR01 = 1, PIOR06 = 0	0/1	—	0	1	—	TO02 = 0, TRDIOA0 = 0, (TRDIOD0) = 0
	(TRDIOD0)	Input	PIOR26 = 1	×	—	1	×	—	—
		Output		0	—	0	0	(TxD0)/(SO00) = 1	TO02 = 0, TRDIOA0 = 0

Table 4 - 9 Setting Examples of Registers When Using P20 to P27 Pin Function (64-pin Products)

Pin Name	Used Function		PIORx	PMCxx	ADM2	PMxx	Pxx
	Function Name	I/O					
P20	P20	Input	—	0	×	1	×
		Output	—	0	×	0	0/1
	ANI0	Analog input	—	1	00x0xx0x, 10x0xx0x	1	×
	AVREFP	Reference voltage input	—	1	01x0xx0x	1	×
	IVCMP12	Analog input	—	1	×	1	1
	(INTP11)	Input	PIOR07 = 1	0	—	1	1
P21	P21	Input	—	0	×	1	×
		Output	—	0	×	0	0/1
	ANI1	Analog input	—	1	xx00xx0x	1	×
	AVREFM	Reference voltage input	—	1	xx10xx0x	1	×
	IVCMP13	Analog input	—	1	×	1	1
P22	P22	Input	—	0	×	1	×
		Output	—	0	×	0	0/1
	ANI2	Analog input	—	1	×	1	×
	ANO0	Analog output	—	1	×	1	×
	PGAI	Analog input	—	1	×	1	1
	IVCMP0	Analog input	—	1	×	1	1
P23	P23	Input	—	0	×	1	×
		Output	—	0	×	0	0/1
	ANI3	Analog input	—	1	×	1	×
	ANO1	Analog output	—	1	×	1	×
	PGAGND	Analog input	—	1	×	1	1
P24	P24	Input	—	0	×	1	×
		Output	—	0	×	0	0/1
	ANI4	Analog input	—	1	×	1	×
P25	P25	Input	—	0	×	1	×
		Output	—	0	×	0	0/1
	ANI5	Analog input	—	1	×	1	×
P26	P26	Input	—	0	×	1	×
		Output	—	0	×	0	0/1
	ANI6	Analog input	—	1	×	1	×
P27	P27	Input	—	0	×	1	×
		Output	—	0	×	0	0/1
	ANI7	Analog input	—	1	×	1	×

Table 4 - 10 Setting Examples of Registers When Using P30 to P120 Pin Function (64-pin Products) (1/4)

Pin Name	Used Function		PIORx	POMxx	PMCxx	PMxx	Pxx	Alternate Function Output	
	Function Name	I/O						SAU Output Function	Other than SAU
P30	P30	Input	—	×	—	1	×	—	—
		Output	×	0	—	0	0/1	SCK00/SCL00 = 1	RTC1HZ = 0, TRJO0 = 0, (TRDIOB1) = 0
		N-ch OD output		1	—	0	0/1		
	INTP3	Input	PIOR00 = 0, PIOR05 = 0	×	—	1	×	—	—
	RTC1HZ	Output	×	0	—	0	0	SCK00/SCL00 = 1	TRJO0 = 0, (TRDIOB1) = 0
	SCK00	Input	PIOR01 = 0	×	—	1	×	—	—
		Output		0/1	—	0	1	—	RTC1HZ = 0, TRJO0 = 0, (TRDIOB1) = 0
	SCL00	Output	PIOR01 = 0	0/1	—	0	1	—	RTC1HZ = 0, TRJO0 = 0, (TRDIOB1) = 0
	TRJO0	Output	PIOR13, PIOR12 = 00B	0	—	0	0	SCK00/SCL00 = 1	RTC1HZ = 0, (TRDIOB1) = 0
	(TRDIOB1)	Input	PIOR23 = 1	×	—	1	×	—	—
		Output		0	—	0	0	SCK00/SCL00 = 1	RTC1HZ = 0, TRJO0 = 0
P31	P31	Input	—	—	—	1	×	—	—
		Output	×	—	—	0	0/1	—	TO03 = 0, (PCLBUZ0) = 0, (TRJIO0) = 0, VCOUT1 = 0
	TI03	Input	—	—	—	1	×	—	—
	TO03	Output	×	—	—	0	0	—	(PCLBUZ0) = 0, (TRJIO0) = 0, VCOUT1 = 0
	INTP4	Input	PIOR00 = 0	—	—	1	×	—	—
	(TRJIO0)	Input	PIOR11, PIOR10 = 01B	—	—	1	×	—	—
		Output		—	—	0	0	—	TO03 = 0, (PCLBUZ0) = 0, VCOUT1 = 0
	(PCLBUZ0)	Output	PIOR03 = 1	—	—	0	0	—	TO03 = 0, (TRJIO0) = 0, VCOUT1 = 0
	VCOUT1	Output	PIOR21 = 0	—	—	0	0	—	TO03 = 0, (PCLBUZ0) = 0, (TRJIO0) = 0
P40	P40	Input	—	×	—	1	×	—	—
		Output	×	—	—	0	0/1	—	—
P41	P41	Input	—	—	—	1	×	—	—
		Output	×	—	—	0	0/1	—	(TRJIO0) = 0
	(TRJIO0)	Input	PIOR11, PIOR10 = 10B	—	—	1	×	—	—
		Output		—	—	0	0	—	—
P42	P42	Input	—	—	—	1	×	—	—
		Output	×	—	—	0	0/1	—	—
	(INTP8)	Input	PIOR00 = 1, PIOR07 = 0	—	—	1	×	—	—

Table 4 - 10 Setting Examples of Registers When Using P30 to P120 Pin Function (64-pin Products) (2/4)

Pin Name	Used Function		PIORx	POMxx	PMCxx	PMxx	Pxx	Alternate Function Output	
	Function Name	I/O						SAU Output Function	Other than SAU
P43	P43	Input	—	×	—	1	×	—	—
		Output	—	—	—	0	0/1	—	—
	(INTP9)	Input	PIOR00 = 1	×	—	1	×	—	—
P50	P50	Input	—	×	—	1	×	—	—
		Output	×	0	—	0	0/1	SDA00 = 1	TRGIOA = 0, (TRJO0) = 0, (TRDIOC1) = 0
		N-ch OD output		1	—	0	0/1		
	INTP1	Input	PIOR00 = 0	×	—	1	×	—	—
	SI00	Input	PIOR01 = 0	×	—	1	×	—	—
	RxD0	Input	PIOR01 = 0	×	—	1	×	—	—
	SDA00	I/O	PIOR01 = 0	1	—	0	1	—	TRGIOA = 0, (TRJO0) = 0, (TRDIOC1) = 0
	TRGIOA	Input	—	×	—	1	×	—	—
		Output	—	0	—	0	0	SDA00 = 1	(TRJO0) = 0, (TRDIOC1) = 0
	(TRJO0)	Output	PIOR13, PIOR12 = 01B	0	—	0	0	SDA00 = 1	TRGIOA = 0, (TRDIOC1) = 0
	(TRDIOC1)	Input	PIOR24 = 1	×	—	1	×	—	—
		Output		0	—	0	0	SDA00 = 1	TRGIOA = 0, (TRJO0) = 0
P51	P51	Input	—	×	—	1	×	—	—
		Output	—	0	—	0	0/1	TxD0/SO00 = 1	TRGIOB = 0, (TRDIOD1) = 0
		N-ch OD output		1	—	0	0/1		
	INTP2	Input	PIOR00 = 0	×	—	1	×	—	—
	SO00	Output	PIOR01 = 0	0/1	—	0	1	—	TRGIOB = 0, (TRDIOD1) = 0
	TxD0	Output	PIOR01 = 0	0/1	—	0	1	—	TRGIOB = 0, (TRDIOD1) = 0
	TRGIOB	Input	—	×	—	1	×	—	—
		Output	—	0	—	0	0	TxD0/SO00 = 1	(TRDIOD1) = 0
	(TRDIOD1)	Input	PIOR25 = 1	×	—	1	×	—	—
		Output		0	—	0	0	TxD0/SO00 = 1	TRGIOB = 0
P52	P52	Input	—	×	—	1	×	—	—
		Output	—	—	—	0	0/1	—	—
	(INTP1)	Input	PIOR00 = 1	×	—	1	×	—	—
P53	P53	Input	—	×	—	1	×	—	—
		Output	×	—	—	0	0/1	—	—
	(INTP2)	Input	PIOR00 = 1	×	—	1	×	—	—
P54	P54	Input	—	×	—	1	×	—	—
		Output	—	—	—	0	0/1	—	—
	(INTP3)	Input	PIOR00 = 1	×	—	1	×	—	—

Table 4 - 10 Setting Examples of Registers When Using P30 to P120 Pin Function (64-pin Products) (3/4)

Pin Name	Used Function		PIORx	POMxx	PMCxx	PMxx	Pxx	Alternate Function Output	
	Function Name	I/O						SAU Output Function	Other than SAU
P55	P55	Input	—	×	—	1	×	—	—
		Output	—	0	—	0	0/1	(SCK00) = 1	(PCLBUZ1) = 0
		N-ch OD output		1	—	0	0/1		
	(INTP4)	Input	PIOR00 = 1	×	—	1	×	—	—
	(PCLBUZ1)	Output	PIOR04 = 1	0	—	0	0	(SCK00) = 1	—
	(SCK00)	Input	PIOR01 = 1	×	—	1	×	—	—
		Output		0/1	—	0	1	—	(PCLBUZ1) = 0
P60	P60	Input	—	—	—	1	×	—	—
		N-ch OD output (6 V tolerance)	×	—	—	0	0/1	—	SCLA0 = 0
	SCLA0	I/O	PIOR02 = 0	—	—	0	0	—	—
P61	P61	Input	—	—	—	1	×	—	—
		N-ch OD output (6 V tolerance)	×	—	—	0	0/1	—	SDAA0 = 0
	SDAA0	I/O	PIOR02 = 0	—	—	0	0	—	—
P62	P62	Input	—	—	—	1	×	—	—
		N-ch OD output (6 V tolerance)	×	—	—	0	0/1	—	—
	$\overline{\text{SSI00}}$	Input	—	—	—	1	×	—	—
P63	P63	Input	—	—	—	1	×	—	—
		N-ch OD output (6 V tolerance)	—	—	—	0	0/1	—	—
P70	P70	Input	—	—	—	1	×	—	—
		Output	—	—	—	0	0/1	SCK21/SCL21 = 1	(VCOUT1) = 0
	KR0	Input	—	—	—	1	×	—	—
	SCK21	Input	—	—	—	1	×	—	—
		Output	—	—	—	0	1	—	(VCOUT1) = 0
	SCL21	Output	—	—	—	0	1	—	(VCOUT1) = 0
	(VCOUT1)	Output	PIOR21 = 1	—	—	0	0	SCK21/SCL21 = 1	—
P71	P71	Input	—	×	—	1	×	—	—
		Output	—	0	—	0	0/1	SDA21 = 1	(VCOUT0) = 0
		N-ch OD output		1	—	0	0/1		
	KR1	Input	—	×	—	1	×	—	—
	SI21	Input	—	×	—	1	×	—	—
	SDA21	I/O	—	1	—	0	1	—	(VCOUT0) = 0
	(VCOUT0)	Output	PIOR20 = 1	0	—	0	0	SDA21 = 1	—
P72	P72	Input	—	—	—	1	×	—	—
		Output	—	—	—	0	0/1	SO21 = 1	—
	KR2	Input	—	—	—	1	×	—	—
	SO21	Output	—	—	—	0	1	—	—
P73	P73	Input	—	—	—	1	×	—	—
		Output	—	—	—	0	0/1	SO01 = 1	—
	KR3	Input	—	—	—	1	×	—	—
	SO01	Output	—	—	—	0	1	—	—

Table 4 - 10 Setting Examples of Registers When Using P30 to P120 Pin Function (64-pin Products) (4/4)

Pin Name	Used Function		PIORx	POMxx	PMCxx	PMxx	Pxx	Alternate Function Output	
	Function Name	I/O						SAU Output Function	Other than SAU
P74	P74	Input	—	×	—	1	×	—	—
		Output	—	0	—	0	0/1	SDA01 = 1	—
		N-ch OD output		1	—	0	0/1		
	KR4	Input	—	—	—	1	×	—	—
	INTP8	Input	PIOR00 = 0, PIOR07 = 0	—	—	1	×	—	—
	SI01	Input	—	—	—	1	×	—	—
	SDA01	I/O	—	1	—	0	1	—	—
P75	P75	Input	—	—	—	1	×	—	—
		Output	—	—	—	0	0/1	SCK01/SCL01 = 1	—
	KR5	Input	—	—	—	1	×	—	—
	INTP9	Input	PIOR00 = 0	—	—	1	×	—	—
	SCK01	Input	—	—	—	1	×	—	—
		Output	—	—	—	0	1	—	—
	SCL01	Output	—	—	—	0	1	—	—
P76	P76	Input	—	—	—	1	×	—	—
		Output	—	—	—	0	0/1	—	—
	KR6	Input	—	—	—	1	×	—	—
	INTP10	Input	PIOR01 = 0, PIOR07 = 0	—	—	1	×	—	—
	(RxD2)	Input	PIOR01 = 1	—	—	1	×	—	—
P77	P77	Input	—	—	—	1	×	—	—
		Output	×	—	—	0	0/1	(TxD2) = 1	—
	KR7	Input	—	—	—	1	×	—	—
	INTP11	Input	PIOR01 = 0, PIOR07 = 0	—	—	1	×	—	—
	(TxD2)	Output	PIOR01 = 1	—	—	0	1	—	—
P120	P120	Input	—	—	0	1	×	—	—
		Output	—	—	0	0	0/1	—	VCOUT0 = 0
	ANI19	Analog input	—	—	1	1	×	—	—
	VCOUT0	Output	PIOR20 = 0	—	0	0	0	—	—

Table 4 - 11 Setting Examples of Registers When Using P121 to P124 Pin Function (64-pin Products)

Pin Name	Used Function		CMC	Pxx
	Function Name	I/O	(EXCLK, OSCSEL, EXCLKS, OSCSELS)	
P121	P121	Input	00xx/10xx/11xx	×
	X1	—	01xx	—
P122	P122	Input	00xx/10xx/11xx	×
	X2	—	01xx	—
	EXCLK	Input	11xx	—
P123	P123	Input	xx00/xx10/xx11	×
	XT1	—	xx01	—
P124	P124	Input	xx00/xx10/xx11	×
	XT2	—	xx01	—
	EXCLKS	Input	xx11	—

Table 4 - 12 Setting Examples of Registers When Using P130 to P147 Pin Function (64-pin Products)

Pin Name	Used Function		PIORx	POMxx	PMCxx	PMxx	Pxx	Alternate Function Output	
	Function Name	I/O						SAU Output Function	Other than SAU
P130	P130	Output	—	—	—	—	0/1	—	—
P137	P137	Input	—	—	—	—	×	—	—
	INTP0	Input	—	—	—	—	×	—	—
P140	P140	Input	—	—	—	1	×	—	—
		Output	—	—	—	0	0/1	—	PCLBUZ0 = 0
	PCLBUZ0	Output	PIOR03 = 0	—	—	0	0	—	—
	INTP6	Input	—	—	—	1	×	—	—
P141	P141	Input	—	—	—	1	×	—	—
		Output	—	—	—	0	0/1	—	PCLBUZ1 = 0
	PCLBUZ1	Output	PIOR04 = 0	—	—	0	0	—	—
	INTP7	Input	—	—	—	1	×	—	—
P146	P146	Input	—	—	—	1	×	—	—
		Output	—	—	—	0	0/1	—	—
P147	P147	Input	—	—	0	1	×	—	—
		Output	—	—	0	0	0/1	—	—
	ANI18	Analog input	—	—	1	1	×	—	—

4.6 Cautions When Using Port Function

4.6.1 Cautions on 1-Bit Manipulation Instruction for Port Register n (Pn)

When a 1-bit manipulation instruction is executed on a port that provides both input and output functions, the output latch value of an input port that is not subject to manipulation may be written in addition to the targeted bit.
Therefore, it is recommended to rewrite the output latch when switching a port from input mode to output mode.

<Example> When P10 is an output port, P11 to P17 are input ports (all pin statuses are high level), and the port latch value of port 1 is 00H, if the output of output port P10 is changed from low level to high level via a 1-bit manipulation instruction, the output latch value of port 1 is FFH.

Explanation: The targets of writing to and reading from the Pn register of a port whose PMnm bit is 1 are the output latch and pin status, respectively.
A 1-bit manipulation instruction is executed in the following order in the RL78/G1F.

<1> The Pn register is read in 8-bit units.
<2> The targeted one bit is manipulated.
<3> The Pn register is written in 8-bit units.
In step <1>, the output latch value (0) of P10, which is an output port, is read, while the pin statuses of P11 to P17, which are input ports, are read. If the pin statuses of P11 to P17 are high level at this time, the read value is FEH.
The value is changed to FFH by the manipulation in <2>.
FFH is written to the output latch by the manipulation in <3>.

Figure 4 - 14 Bit Manipulation Instruction (P10)

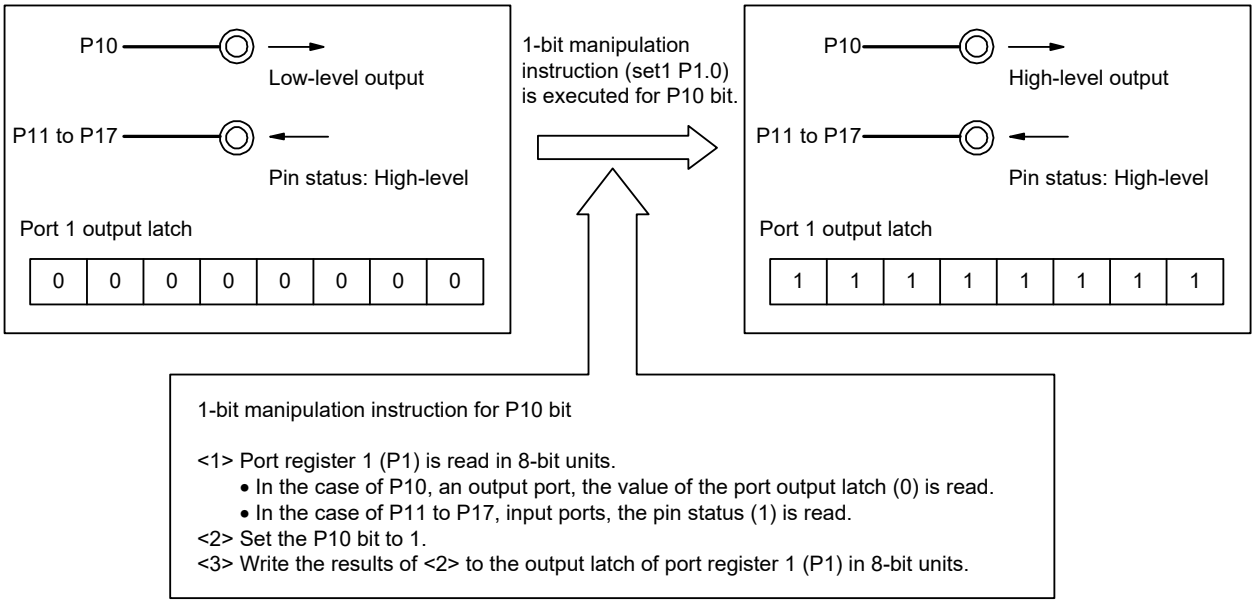

4.6.2 Notes on specifying the pin settings

For an output pin to which multiple functions are assigned, the output of the unused alternate functions must be set to its initial state so as to prevent conflicting outputs. This also applies to the functions assigned by using the peripheral I/O redirection registers 0 to 3 (PIOR0 to PIOR3). For details about the alternate function output, see **4.5 Register Settings When Using Alternate Function**.

No specific setting is required for input pins because the output of their alternate functions is disabled (the buffer output is Hi-Z).

Disabling the unused functions, including blocks that are only used for input or do not have I/O, is recommended for lower power consumption.

CHAPTER 5 CLOCK GENERATOR

The presence or absence of connecting resonator pin for main system clock, connecting resonator pin for subsystem clock, external clock input pin for main system clock, and external clock input pin for subsystem clock, depends on the product.

	24, 32-pin products	36, 48, 64-pin products
X1, X2 pins	√	√
EXCLK pin	√	√
XT1, XT2 pins	—	√
EXCLKS pin	—	√

5.1 Functions of Clock Generator

The clock generator generates the clock to be supplied to the CPU and peripheral hardware.
The following three kinds of system clocks and clock oscillators are selectable.

(1) Main system clock

<1> X1 oscillator

This circuit oscillates a clock of f_X = 1 to 20 MHz by connecting a resonator to X1 pin and X2 pin.
Oscillation can be stopped by executing the STOP instruction or setting of the MSTOP bit (bit 7 of the clock operation status control register (CSC)).

<2> High-speed on-chip oscillator (High-speed OCO)

The frequency at which to oscillate can be selected from among f_{HOCO} = 64, 48, 32, 24, 16, 12, 8, 6, 4, 3, 2, or 1 MHz (TYP.) by using the option byte (000C2H). When 64 MHz or 48 MHz is selected as f_{HOCO}, f_{IH} is set to 32 MHz or 24 MHz, respectively. When 32 MHz or less is selected as f_{HOCO}, f_{IH} is not divided and set to the same frequency as f_{HOCO}. After a reset release, the CPU always starts operating with this high-speed on-chip oscillator clock. Oscillation can be stopped by executing the STOP instruction or setting of the HIOSTOP bit (bit 0 of the CSC register).
The frequency specified by using an option byte can be changed by using the high-speed on-chip oscillator frequency select register (HOCODIV). For details about the frequency, see **Figure 5 - 13 Format of High-speed on-chip oscillator frequency select register (HOCODIV)**.
The frequencies that can be specified for the high-speed on-chip oscillator by using the option byte and the high-speed on-chip oscillator frequency select register (HOCODIV) are shown below.

Power Supply Voltage	Oscillation Frequency (MHz)											
	1	2	3	4	6	8	12	16	24	32	48	64
2.7 V ≤ V_{DD} ≤ 5.5 V	√	√	√	√	√	√	√	√	√	√	√	√
2.4 V ≤ V_{DD} ≤ 5.5 V	√	√	√	√	√	√	√	√	—	—	—	—
1.8 V ≤ V_{DD} ≤ 5.5 V	√	√	√	√	√	√	—	—	—	—	—	—
1.6 V ≤ V_{DD} ≤ 5.5 V	√	√	√	√	—	—	—	—	—	—	—	—

An external main system clock (f_{EX} = 1 to 20 MHz) can also be supplied from the EXCLK/X2/P122 pin. An external main system clock input can be disabled by executing the STOP instruction or setting of the MSTOP bit. As the main system clock, a high-speed system clock (X1 clock or external main system clock) or high-speed on-chip oscillator clock can be selected by setting of the MCM0 bit (bit 4 of the system clock control register (CKC)). However, note that the usable frequency range of the main system clock differs depending on the setting of the power supply voltage (VDD). The operating voltage of the flash memory must be set by using the CMODE0 and CMODE1 bits of the option byte (000C2H) (see CHAPTER 32 OPTION BYTE).

(2) Subsystem clock

• XT1 clock oscillator

This circuit oscillates a clock of f_{XT} = 32.768 kHz by connecting a 32.768 kHz resonator to XT1 pin and XT2 pin. Oscillation can be stopped by setting the XTSTOP bit (bit 6 of the clock operation status control register (CSC)).

An external subsystem clock (f_{EXS} = 32.768 kHz) can also be supplied from the EXCLKS/XT2/P124 pin. An external subsystem clock input can be disabled by the setting of the XTSTOP bit.

(3) Low-speed on-chip oscillator (Low-speed OCO)

This circuit oscillates a clock of f_{IL} = 15 kHz (TYP.).

The low-speed on-chip oscillator clock cannot be used as the CPU clock.

Only the following peripheral hardware runs on the low-speed on-chip oscillator clock.

• Watchdog timer
• Real-time clock
• 12-bit interval timer
• Timer RJ

This clock operates when bit 4 (WDTON) of the option byte (000C0H), bit 4 (WUTMMCK0) of the subsystem clock supply mode control register (OSMC), or both are set to 1.

However, if WDTON = 1, WUTMMCK0 = 0, and bit 0 (WDSTBYON) of the option byte (000C0H) is 0, the low-speed on-chip oscillator stops oscillation when the HALT or STOP instruction is executed.

Caution **The low-speed on-chip oscillator clock (f_{IL}) can only be selected as the real-time clock count clock when the fixed-cycle interrupt function is used.**

Remark

f_X:	X1 clock oscillation frequency
f_{HOCO}:	High-speed on-chip oscillator clock frequency (64 MHz max.)
f_{IH}:	High-speed on-chip oscillator clock frequency (32 MHz max.) Note
f_{EX}:	External main system clock frequency
f_{XT}:	XT1 clock oscillation frequency
f_{EXS}:	External subsystem clock frequency
f_{IL}:	Low-speed on-chip oscillator frequency

Note f_{IH} is controlled by hardware to be set to two frequency division of f_{HOCO} when f_{HOCO} is set to 64 MHz or 48 MHz, and the same clock frequency as f_{HOCO} when f_{HOCO} is set to 32 MHz or less. When supplying 64 MHz or 48 MHz to timer RD and timer RX, set f_{CLK} to f_{IH}.

5.2 Configuration of Clock Generator

The clock generator includes the following hardware.

Table 5 - 1 Configuration of Clock Generator

Item	Configuration
Control registers	Clock operation mode control register (CMC) System clock control register (CKC) Clock operation status control register (CSC) Oscillation stabilization time counter status register (OSTC) Oscillation stabilization time select register (OSTS) Peripheral enable registers 0, 1 (PER0, PER1) Subsystem clock supply mode control register (OSMC) High-speed on-chip oscillator frequency select register (HOCODIV) High-speed on-chip oscillator trimming register (HIOTRM)
Oscillators	X1 oscillator XT1 oscillator High-speed on-chip oscillator Low-speed on-chip oscillator

Figure 5 - 1 Block Diagram of Clock Generator

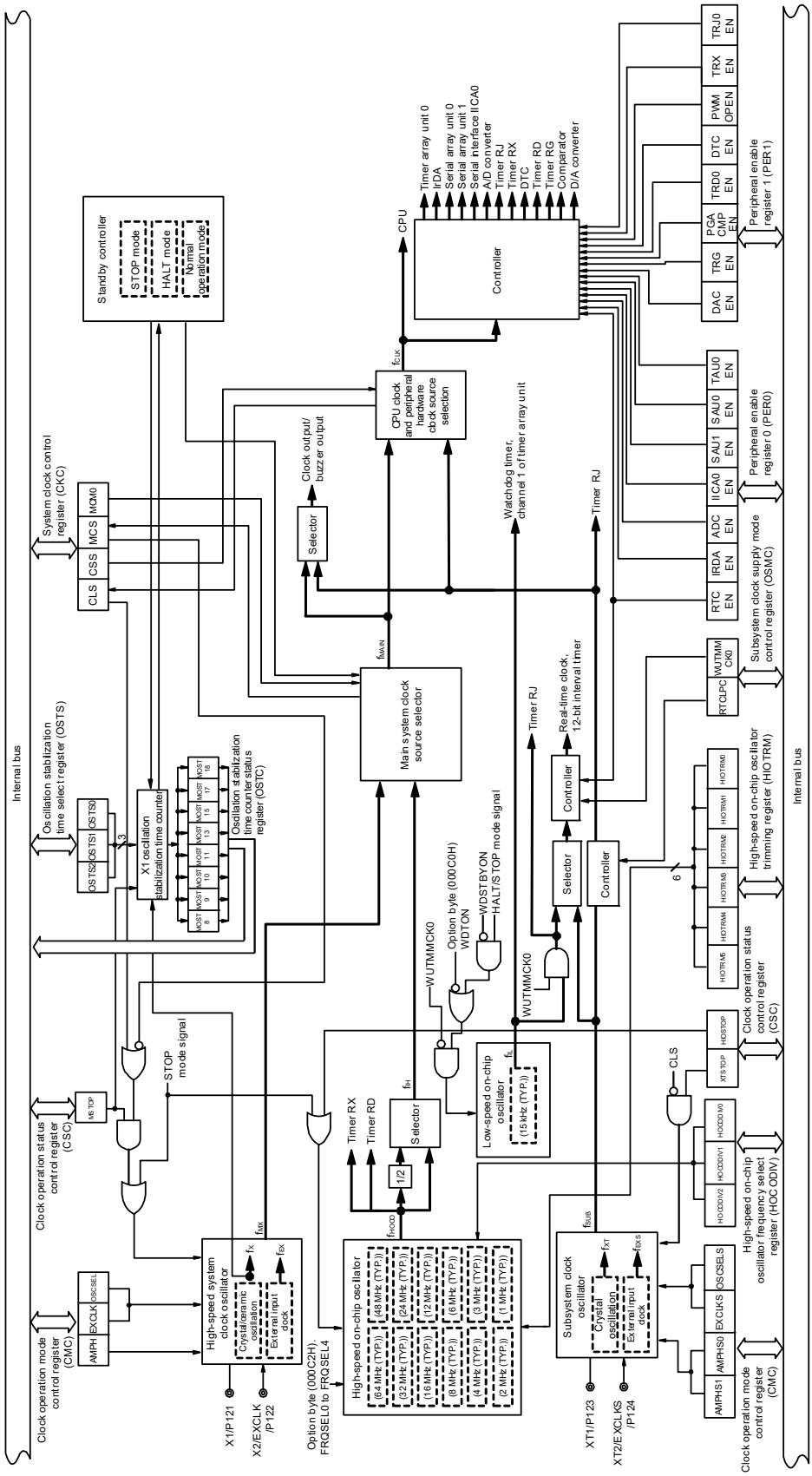

(**Remark** and **Note** are listed on the next page after next.)

Remark f_X: X1 clock oscillation frequency
f_{HOCO}: High-speed on-chip oscillator clock frequency (64 MHz max.)
f_{IH}: High-speed on-chip oscillator clock frequency (32 MHz max.) Note
f_{EX}: External main system clock frequency
f_{MX}: High-speed system clock frequency
f_{MAIN}: Main system clock frequency
f_{XT}: XT1 clock oscillation frequency
f_{EXS}: External subsystem clock frequency
f_{SUB}: Subsystem clock frequency
f_{CLK}: CPU/peripheral hardware clock frequency
f_{IL}: Low-speed on-chip oscillator clock frequency

Note f_{IH} is controlled by hardware to be set to two frequency division of f_{HOCO} when f_{HOCO} is set to 64 MHz or 48 MHz, and the same clock frequency as f_{HOCO} when f_{HOCO} is set to 32 MHz or less. When supplying 64 MHz or 48 MHz to timer RD and timer RX, set f_{CLK} to f_{IH}.

5.3 Registers Controlling Clock Generator

The following registers are used to control the clock generator.

- Clock operation mode control register (CMC)
- System clock control register (CKC)
- Clock operation status control register (CSC)
- Oscillation stabilization time counter status register (OSTC)
- Oscillation stabilization time select register (OSTS)
- Peripheral enable registers 0, 1 (PER0, PER1)
- Subsystem clock supply mode control register (OSMC)
- High-speed on-chip oscillator frequency select register (HOCODIV)
- High-speed on-chip oscillator trimming register (HIOTRM)

Caution Which registers and bits are included depends on the product. Be sure to set registers and bits that are not mounted in a product to their initial values.

5.3.1 Clock operation mode control register (CMC)

This register is used to set the operation mode of the X1/P121, X2/EXCLK/P122, XT1/P123, and XT2/EXCLKS/P124 pins, and to select a gain of the oscillator.
The CMC register can be written only once by an 8-bit memory manipulation instruction after reset release. This register can be read by an 8-bit memory manipulation instruction.
Reset signal generation clears this register to 00H.

Figure 5 - 2 Format of Clock operation mode control register (CMC)

Address: FFFA0H After reset: 00H R/W

Symbol	7	6	5	4	3	2	1	0
CMC	EXCLK	OSCSEL	EXCLKS	OSCSELS	0	AMPHS1	AMPHS0	AMPH

EXCLK	OSCSEL	High-speed system clock pin operation mode	X1/P121 pin	X2/EXCLK/P122 pin
0	0	Input port mode	Input port	
0	1	X1 oscillation mode	Crystal/ceramic resonator connection	
1	0	Input port mode	Input port	
1	1	External clock input mode	Input port	External clock input

EXCLKS	OSCSELS	Subsystem clock pin operation mode	XT1/P123 pin	XT2/EXCLKS/P124 pin
0	0	Input port mode	Input port	
0	1	XT1 oscillation mode	Crystal resonator connection	
1	0	Input port mode	Input port	
1	1	External clock input mode	Input port	External clock input

AMPHS1	AMPHS0	XT1 oscillator oscillation mode selection
0	0	Low power consumption oscillation (default)
0	1	Normal oscillation
1	0	Ultra-low power consumption oscillation
1	1	Setting prohibited

AMPH	Control of X1 clock oscillation frequency
0	1 MHz ≤ fx ≤ 10 MHz
1	10 MHz < fx ≤ 20 MHz

Caution 1. The CMC register can be written only once after reset release, by an 8-bit memory manipulation instruction. When using the CMC register with its initial value (00H), be sure to set the register to 00H after a reset ends in order to prevent malfunction due to a program loop. Such a malfunction becomes unrecoverable when a value other than 00H is mistakenly written.

Caution 2. After reset release, set the CMC register before X1 or XT1 oscillation is started as set by the clock operation status control register (CSC).

Caution 3. Be sure to set the AMPH bit to 1 if the X1 clock oscillation frequency exceeds 10 MHz.

Caution 4. Specify the settings for the AMPH, AMPHS1, and AMPHS0 bits while f_{IH} is selected as f_{CLK} after a reset ends (before f_{CLK} is switched to f_{MX} or f_{SUB}).

Caution 5. Oscillation stabilization time of f_{XT}, counting on the software.

Caution 6. Although the maximum system clock frequency is 32 MHz, the maximum frequency of the X1 oscillator is 20 MHz.

(**Caution** and **Remark** are given on the next page.)

Caution 7. The XT1 oscillator is a circuit with low amplification in order to achieve low-power consumption. Note the following points when designing the circuit.

- **Pins and circuit boards include parasitic capacitance. Therefore, perform oscillation evaluation using a circuit board to be actually used and confirm that there are no problems.**
- **When using the ultra-low power consumption oscillation (AMPHS1, AMPHS0 = 1, 0) as the mode of the XT1 oscillator, evaluate the resonators.**
- **Make the wiring between the XT1 and XT2 pins and the resonators as short as possible, and minimize the parasitic capacitance and wiring resistance. Note this particularly when the ultra-low power consumption oscillation (AMPHS1, AMPHS0 = 1, 0) is selected.**
- **Configure the circuit of the circuit board, using material with little parasitic capacitance and wiring resistance.**
- **Place a ground pattern that has the same potential as V_{SS} as much as possible near the XT1 oscillator.**
- **Be sure that the signal lines between the XT1 and XT2 pins, and the resonators do not cross with the other signal lines. Do not route the wiring near a signal line through which a high fluctuating current flows.**
- **The impedance between the XT1 and XT2 pins may drop and oscillation may be disturbed due to moisture absorption of the circuit board in a high-humidity environment or dew condensation on the board. When using the circuit board in such an environment, take measures to damp-proof the circuit board, such as by coating.**
- **When coating the circuit board, use material that does not cause capacitance or leakage between the XT1 and XT2 pins.**

Remark fx: X1 clock frequency

5.3.2 System clock control register (CKC)

This register is used to select a CPU/peripheral hardware clock and a main system clock.
The CKC register can be set by a 1-bit or 8-bit memory manipulation instruction.
Reset signal generation sets this register to 00H.

Figure 5 - 3 Format of System clock control register (CKC)

Address: FFFA4H After reset: 00H R/W[Note 1]

Symbol	7	6	5	4	3	2	1	0
CKC	CLS	CSS[Note 2]	MCS	MCM0[Note 2]	0	0	0	0

CLS	Status of CPU/peripheral hardware clock (f_{CLK})
0	Main system clock (f_{MAIN})
1	Subsystem clock (f_{SUB})

CSS[Note 2]	Selection of CPU/peripheral hardware clock (f_{CLK})
0	Main system clock (f_{MAIN})
1	Subsystem clock (f_{SUB})

MCS	Status of Main system clock (f_{MAIN})
0	High-speed on-chip oscillator clock (f_{IH})
1	High-speed system clock (f_{MX})

MCM0[Note 2]	Main system clock (f_{MAIN}) operation control
0	Selects the high-speed on-chip oscillator clock (f_{IH}) as the main system clock (f_{MAIN})
1	Selects the high-speed system clock (f_{MX}) as the main system clock (f_{MAIN})

Note 1. Bits 7 and 5 are read-only.
Note 2. Changing the value of the MCM0 bit is prohibited while the CSS bit is set to 1.

Remark f_{HOCO}: High-speed on-chip oscillator clock frequency (64 MHz max.)
f_{IH}: High-speed on-chip oscillator clock frequency (32 MHz max.) [Note]
f_{MX}: High-speed system clock frequency
f_{MAIN}: Main system clock frequency
f_{SUB}: Subsystem clock frequency

Note f_{IH} is controlled by hardware to be set to two frequency division of f_{HOCO} when f_{HOCO} is set to 64 MHz or 48 MHz, and the same clock frequency as f_{HOCO} when f_{HOCO} is set to 32 MHz or less. When supplying 64 MHz or 48 MHz to timer RD and timer RX, set f_{CLK} to f_{IH}.

(**Cautions** are listed on the next page.)

Caution 1. Be sure to set bits 0 to 3 of the CKC register to 0.

Caution 2. The clock set by the CSS bit is supplied to the CPU and peripheral hardware. If the CPU clock is changed, therefore, the clock supplied to peripheral hardware (except the real-time clock, 12-bit interval timer, clock output/buzzer output, and watchdog timer) is also changed at the same time. Consequently, stop each peripheral function when changing the CPU/peripheral hardware clock.

Caution 3. If the subsystem clock is used as the peripheral hardware clock, the operations of the A/D converter and IICA are not guaranteed. For the operating characteristics of the peripheral hardware, refer to the chapters describing the various peripheral hardware as well as CHAPTER 37 or CHAPTER 38 ELECTRICAL SPECIFICATIONS.

Caution 4. When selecting f_{HOCO} as the count source for timer RD and timer RX, set f_{CLK} to f_{IH} before setting bit 4 (TRD0EN) in peripheral enable register 1 (PER1). When changing f_{CLK} to a clock other than f_{IH}, clear bit 4 (TRD0EN) in peripheral enable register 1 (PER1) before changing.

5.3.3 Clock operation status control register (CSC)

This register is used to control the operations of the high-speed system clock, high-speed on-chip oscillator clock, and subsystem clock (except the low-speed on-chip oscillator clock).

The CSC register can be set by a 1-bit or 8-bit memory manipulation instruction.

Reset signal generation sets this register to C0H.

Figure 5 - 4 Format of Clock operation status control register (CSC)

Address: FFFA1H After reset: C0H R/W

Symbol	7	6	5	4	3	2	1	0
CSC	MSTOP	XTSTOP	0	0	0	0	0	HIOSTOP

MSTOP	High-speed system clock operation control		
	X1 oscillation mode	External clock input mode	Input port mode
0	X1 oscillator operating	External clock from EXCLK pin is valid	Input port
1	X1 oscillator stopped	External clock from EXCLK pin is invalid	

XTSTOP	Subsystem clock operation control		
	XT1 oscillation mode	External clock input mode	Input port mode
0	XT1 oscillator operating	External clock from EXCLKS pin is valid	Input port
1	XT1 oscillator stopped	External clock from EXCLKS pin is invalid	

HIOSTOP	High-speed on-chip oscillator clock operation control
0	High-speed on-chip oscillator operating
1	High-speed on-chip oscillator stopped

Caution 1. After reset release, set the clock operation mode control register (CMC) before setting the CSC register.

Caution 2. Set the oscillation stabilization time select register (OSTS) before setting the MSTOP bit to 0 after releasing reset. Note that if the OSTS register is being used with its default settings, the OSTS register is not required to be set here.

Caution 3. To start X1 oscillation as set by the MSTOP bit, check the oscillation stabilization time of the X1 clock by using the oscillation stabilization time counter status register (OSTC).

Caution 4. When starting XT1 oscillation by setting the XSTOP bit, wait for oscillation of the subsystem clock to stabilize by setting a wait time using software.

Caution 5. Do not stop the clock selected for the CPU peripheral hardware clock (f_{CLK}) with the OSC register.

Caution 6. The setting of the flags of the register to stop clock oscillation (invalidate the external clock input) and the condition before clock oscillation is to be stopped are as Table 5 - 2. Before stopping the clock oscillation, check the conditions before the clock oscillation is stopped.

Table 5 - 2 Stopping Clock Method

Clock	Condition Before Stopping Clock (Invalidating External Clock Input)	Setting of CSC Register Flags
X1 clock	CPU and peripheral hardware clocks operate with a clock other than the high-speed system clock. (CLS = 0 and MCS = 0, or CLS = 1)	MSTOP = 1
External main system clock		
XT1 clock	CPU and peripheral hardware clocks operate with a clock other than the subsystem clock. (CLS = 0)	XTSTOP = 1
External subsystem clock		
High-speed on-chip oscillator clock	CPU and peripheral hardware clocks operate with a clock other than the high-speed on-chip oscillator clock. (CLS = 0 and MCS = 1, or CLS = 1)	HIOSTOP = 1

5.3.4 Oscillation stabilization time counter status register (OSTC)

This is the register that indicates the count status of the X1 clock oscillation stabilization time counter.
The X1 clock oscillation stabilization time can be checked in the following case,

- When the X1 clock starts oscillation while the high-speed on-chip oscillator clock or subsystem clock is being used as the CPU clock.
- When the STOP mode is entered and then released while the high-speed on-chip oscillator clock is being used as the CPU clock with the X1 clock oscillating.

The OSTC register can be read by a 1-bit or 8-bit memory manipulation instruction.
The generation of reset signal, the STOP instruction and MSTOP (bit 7 of clock operation status control register (CSC)) = 1 clear the OSTC register to 00H.

Remark The oscillation stabilization time counter starts counting in the following cases.
- When oscillation of the X1 clock starts (EXCLK, OSCSEL = 0, 1 → MSTOP = 0)
- When the STOP mode is released

Figure 5 - 5 Format of Oscillation stabilization time counter status register (OSTC)

Address: FFFA2H After reset: 00H R

Symbol	7	6	5	4	3	2	1	0
OSTC	MOST8	MOST9	MOST 10	MOST 11	MOST 13	MOST 15	MOST 17	MOST 18

MOST 8	MOST 9	MOST 10	MOST 11	MOST 13	MOST 15	MOST 17	MOST 18	Oscillation stabilization time status		
									fx = 10 MHz	fx = 20 MHz
0	0	0	0	0	0	0	0	2^8/fx max.	25.6 µs max.	12.8 µs max.
1	0	0	0	0	0	0	0	2^8/fx min.	25.6 µs min.	12.8 µs min.
1	1	0	0	0	0	0	0	2^9/fx min.	51.2 µs min.	25.6 µs min.
1	1	1	0	0	0	0	0	2^{10}/fx min.	102 µs min.	51.2 µs min.
1	1	1	1	0	0	0	0	2^{11}/fx min.	204 µs min.	102 µs min.
1	1	1	1	1	0	0	0	2^{13}/fx min.	819 µs min.	409 µs min.
1	1	1	1	1	1	0	0	2^{15}/fx min.	3.27 ms min.	1.63 ms min.
1	1	1	1	1	1	1	0	2^{17}/fx min.	13.1 ms min.	6.55 ms min.
1	1	1	1	1	1	1	1	2^{18}/fx min.	26.2 ms min.	13.1 ms min.

Caution 1. After the above time has elapsed, the bits are set to "1" in order from the MOST8 bit and remain "1".

Caution 2. The oscillation stabilization time counter counts up to the oscillation stabilization time set by the oscillation stabilization time select register (OSTS).
In the following cases, set the oscillation stabilization time of the OSTS register to the value greater than the count value which is to be checked by the OSTC register.

- **When the X1 clock starts oscillation while the high-speed on-chip oscillator clock or subsystem clock is being used as the CPU clock.**
- **When the STOP mode is entered and then released while the high-speed on-chip oscillator clock is being used as the CPU clock with the X1 clock oscillating.**
  (Note, therefore, that only the status up to the oscillation stabilization time set by the OSTS register is set to the OSTC register after the STOP mode is released.)

Caution 3. The X1 clock oscillation stabilization wait time does not include the time until clock oscillation starts ("a" below).

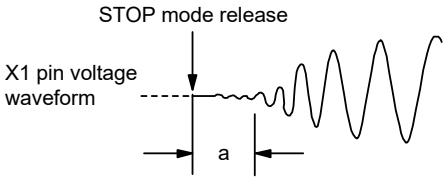

Remark fx: X1 clock oscillation frequency

5.3.5 Oscillation stabilization time select register (OSTS)

This register is used to select the X1 clock oscillation stabilization wait time.

When the X1 clock is made to oscillate by clearing the MSTOP bit to start the X1 oscillation circuit operating, actual operation is automatically delayed for the time set in the OSTS register.

When switching the CPU clock from the high-speed on-chip oscillator clock or the subsystem clock to the X1 clock, and when using the high-speed on-chip oscillator clock for switching the X1 clock from the oscillating state to STOP mode, use the oscillation stabilization time counter status register (OSTC) to confirm that the desired oscillation stabilization time has elapsed after release from the STOP mode. That is, use the OSTC register to check that the oscillation stabilization time corresponding to its setting has been reached.

The OSTS register can be set by an 8-bit memory manipulation instruction.

Reset signal generation sets the OSTS register to 07H.

Figure 5 - 6 Format of Oscillation stabilization time select register (OSTS)

Address: FFFA3H After reset: 07H R/W

Symbol	7	6	5	4	3	2	1	0
OSTS	0	0	0	0	0	OSTS2	OSTS1	OSTS0

OSTS2	OSTS1	OSTS0	Oscillation stabilization time selection		
				fx = 10 MHz	fx = 20 MHz
0	0	0	2^8/fx	25.6 μs	12.8 μs
0	0	1	2^9/fx	51.2 μs	25.6 μs
0	1	0	2^{10}/fx	102 μs	51.2 μs
0	1	1	2^{11}/fx	204 μs	102 μs
1	0	0	2^{13}/fx	819 μs	409 μs
1	0	1	2^{15}/fx	3.27 ms	1.63 ms
1	1	0	2^{17}/fx	13.1 ms	6.55 ms
1	1	1	2^{18}/fx	26.2 ms	13.1 ms

Caution 1. Change the setting of the OSTS register before setting the MSTOP bit of the clock operation status control register (CSC) to 0.

Caution 2. The oscillation stabilization time counter counts up to the oscillation stabilization time set by the OSTS register.

In the following cases, set the oscillation stabilization time of the OSTS register to the value greater than the count value which is to be checked by the OSTC register after the oscillation starts.

- **When the X1 clock starts oscillation while the high-speed on-chip oscillator clock or subsystem clock is being used as the CPU clock.**
- **When the STOP mode is entered and then released while the high-speed on-chip oscillator clock is being used as the CPU clock with the X1 clock oscillating. (Note, therefore, that only the status up to the oscillation stabilization time set by the OSTS register is set to the OSTC register after the STOP mode is released.)**

Caution 3. The X1 clock oscillation stabilization wait time does not include the time until clock oscillation starts ("a" below).

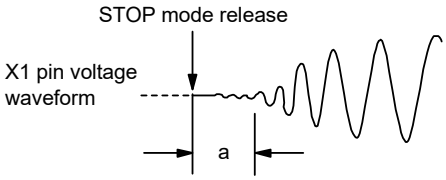

Remark fx: X1 clock oscillation frequency

5.3.6 Peripheral enable registers 0, 1 (PER0, PER1)

These registers are used to enable or disable supplying the clock to the peripheral hardware. Clock supply to the hardware that is not used is also stopped so as to decrease the power consumption and noise.
To use the peripheral functions below, which are controlled by these registers, set (1) the bit corresponding to each function before specifying the initial settings of the peripheral functions.

- Real-time clock and 12-bit interval timer
- IrDA
- A/D converter
- Serial interface IICA0
- Serial array unit 1
- Serial array unit 0
- Timer array unit 0
- D/A converter
- Timer RG
- PWM option unit
- Comparator
- Timer RD
- DTC
- Timer RJ
- Timer RX

The PER0 and PER1 registers can be set by a 1-bit or 8-bit memory manipulation instruction.
Reset signal generation clears these registers to 00H.

Figure 5 - 7 Format of Peripheral enable register 0 (PER0) (1/3)

Address: F00F0H After reset: 00H R/W

Symbol	7	6	5	4	3	2	1	0
PER0	RTCEN	IRDAEN	ADCEN	IICA0EN	SAU1EN	SAU0EN	0	TAU0EN

RTCEN	Control of supplying input clock for real-time clock (RTC) and 12-bit interval timer
0	Stops input clock supply. • SFR used by the real-time clock (RTC) and 12-bit interval timer cannot be written. • The real-time clock (RTC) and 12-bit interval timer are in the reset status.
1	Enables input clock supply. • SFR used by the real-time clock (RTC) and 12-bit interval timer can be read and written.

Figure 5 - 8 Format of Peripheral enable register 0 (PER0) (2/3)

Address: F00F0H After reset: 00H R/W

Symbol	7	6	5	4	3	2	1	0
PER0	RTCEN	IRDAEN	ADCEN	IICA0EN	SAU1EN	SAU0EN	0	TAU0EN

IRDAEN	Control of serial interface IICA1 input clock supply
0	Stops input clock supply. • SFR used by IrDA cannot be written. • IrDA is in the reset status.
1	Enables input clock supply. • SFR used by IrDA can be read and written.

ADCEN	Control of A/D converter input clock supply
0	Stops input clock supply. • SFR used by the A/D converter cannot be written. • The A/D converter is in the reset status.
1	Enables input clock supply. • SFR used by the A/D converter can be read and written.

IICA0EN	Control of serial interface IICA0 input clock supply
0	Stops input clock supply. • SFR used by the serial interface IICA0 cannot be written. • The serial interface IICA0 is in the reset status.
1	Enables input clock supply. • SFR used by the serial interface IICA0 can be read and written.

SAU1EN	Control of serial array unit 1 input clock supply
0	Stops input clock supply. • SFR used by the serial array unit 1 cannot be written. • The serial array unit 1 is in the reset status.
1	Enables input clock supply. • SFR used by the serial array unit 1 can be read and written.

SAU0EN	Control of serial array unit 0 input clock supply
0	Stops input clock supply. • SFR used by the serial array unit 0 cannot be written. • The serial array unit 0 is in the reset status.
1	Enables input clock supply. • SFR used by the serial array unit 0 can be read and written.

Figure 5 - 9 Format of Peripheral enable register 0 (PER0) (3/3)

Address: F00F0H After reset: 00H R/W

Symbol	7	6	5	4	3	2	1	0
PER0	RTCEN	IRDAEN	ADCEN	IICA0EN	SAU1EN	SAU0EN	0	TAU0EN

TAU0EN	Control of timer array unit 0 input clock supply
0	Stops input clock supply. • SFR used by timer array unit 0 cannot be written. • Timer array unit 0 is in the reset status.
1	Enables input clock supply.Note 1 • SFR used by timer array unit 0 can be read and written.

Figure 5 - 10 Format of Peripheral enable register 1 (PER1) (1/2)

Address: F007AH After reset: 00H R/W

Symbol	7	6	5	4	3	2	1	0
PER1	DACEN	TRGEN	PGACMPEN	TRD0EN Note 1	DTCEN	PWMOPEN	TRXEN Note 2	TRJ0EN

DACEN	Control of D/A converter 0, 1 input clock supply
0	Stops input clock supply. • SFR used by the D/A converter 0, 1 cannot be written. • The D/A converter is in the reset status.
1	Enables input clock supply. • SFR used by the D/A converter 0, 1 can be read and written.

TRGEN	Control of timer RG input clock supply
0	Stops input clock supply. • SFR used by timer RG cannot be written. • Timer RG is in the reset status.
1	Enables input clock supply. • SFR used by timer RG can be read and written.

PGACMPEN	Control of PGA and comparator 0, 1 input clock supply
0	Stops input clock supply. • SFR used by PGA and comparator 0, 1 cannot be written. • PGA and comparator 0, 1 is in the reset status.
1	Enables input clock supply. • SFR used by PGA and comparator 0, 1 can be read and written.

TRD0EN Note 1	Control of timer RD input clock supply
0	Stops input clock supply. • SFR used by timer RD cannot be written. • Timer RD is in the reset status.
1	Enables input clock supply. • SFR used by timer RD can be read and written.

Note 1. When FRQSEL4 = 1 in the user option byte (000C2H), set f_{CLK} to f_{IH} before setting bit 4 (TRD0EN) in peripheral enable register 1 (PER1).
When changing f_{CLK} to a clock other than f_{IH}, clear bit 4 (TRD0EN) in peripheral enable register 1 (PER1) before changing.

Note 2. When selecting f_{HOCO} as the count source for timer RX, set f_{CLK} to f_{IH} before setting bit 1 (TRXEN) in peripheral enable register 1 (PER1).
When changing f_{CLK} to a clock other than f_{IH}, clear bit 1 (TRXEN) in peripheral enable register 1 (PER1) before changing.

Figure 5 - 11 Format of Peripheral enable register 1 (PER1) (2/2)

Address: F007AH After reset: 00H R/W

Symbol	7	6	5	4	3	2	1	0
PER1	DACEN	TRGEN	PGACMPEN	TRD0EN[Note 1]	DTCEN	PWMOPEN	TRXEN[Note 2]	TRJ0EN

DTCEN	Control of DTC input clock supply
0	Stops input clock supply. • DTC cannot run.
1	Enables input clock supply. • DTC can run.

PWMOPEN	Control of PWMOPA input clock supply/stop
0	Stops input clock supply. • SFR used by PWMOPA cannot be written. • PWMOPA is in the reset status.
1	Enables input clock supply. • SFR used by PWMOPA can be read and written.

TRXEN[Note 2]	Control of timer RX input clock supply
0	Stops input clock supply. • SFR used by timer RX cannot be written. • Timer RX is in the reset status.
1	Enables input clock supply. • SFR used by timer RX can be read and written.

TRJ0EN	Control of timer RJ input clock supply/stop
0	Stops input clock supply. • SFR used by timer RJ cannot be written. • Timer RJ is in the reset status.
1	Enables input clock supply. • SFR used by timer RJ can be read and written.

Note 1. When FRQSEL4 = 1 in the user option byte (000C2H), set f_{CLK} to f_{IH} before setting bit 4 (TRD0EN) in peripheral enable register 1 (PER1).
When changing f_{CLK} to a clock other than f_{IH}, clear bit 4 (TRD0EN) in peripheral enable register 1 (PER1) before changing.

Note 2. When selecting f_{HOCO} as the count source for timer RX, set f_{CLK} to f_{IH} before setting bit 1 (TRXEN) in peripheral enable register 1 (PER1).
When changing f_{CLK} to a clock other than f_{IH}, clear bit 1 (TRXEN) in peripheral enable register 1 (PER1) before changing.

5.3.7 Subsystem clock supply mode control register (OSMC)

This register is used to reduce power consumption by stopping unnecessary clock functions.

If the RTCLPC bit is set to 1, power consumption can be reduced, because clock supply to the peripheral functions, except the real-time clock and 12-bit interval timer, is stopped in STOP mode or HALT mode while subsystem clock is selected as CPU clock.

In addition, the OSMC register can be used to select the operation clock of the real-time clock and 12-bit interval timer.

The OSMC register can be set by an 8-bit memory manipulation instruction.

Reset signal generation clears this register to 00H.

Figure 5 - 12 Format of Subsystem clock supply mode control register (OSMC)

Address: F00F3H After reset: 00H R/W

Symbol	7	6	5	4	3	2	1	0
OSMC	RTCLPC	0	0	WUTMMCK0	0	0	0	0

RTCLPC	Setting in STOP mode or HALT mode while subsystem clock is selected as CPU clock
0	Enables supply of subsystem clock to peripheral functions (See **Tables 26 - 1** to **26 - 4** for peripheral functions whose operations are enabled.)
1	Stops supply of subsystem clock to peripheral functions other than real-time clock and 12-bit interval timer.

WUTMMCK0	Selection of operation clock for real-time clock, 12-bit interval timer, and timer RJ
0	• The subsystem clock is selected as the operation clock for the real-time clock and the 12-bit interval timer. The low-speed on-chip oscillator cannot be selected as the count source for timer RJ.
1	• The low-speed on-chip oscillator clock is selected as the operation clock for the real-time clock and the 12-bit interval timer. • Either the low-speed on-chip oscillator or the subsystem clock can be selected as the count source for timer RJ.

5.3.8 High-speed on-chip oscillator frequency select register (HOCODIV)

The frequency of the high-speed on-chip oscillator which is set by an option byte (000C2H) can be changed by using high-speed on-chip oscillator frequency select register (HOCODIV). However, the selectable frequency depends on the FRQSEL4 and FRQSEL3 bits of the option byte (000C2H).

The HOCODIV register can be set by an 8-bit memory manipulation instruction.

Reset signal generation clears this register to the value set by FRQSEL2 to FRQSEL0 of the option byte (000C2H).

Figure 5 - 13 Format of High-speed on-chip oscillator frequency select register (HOCODIV)

Address: F00A8H After reset: the value set by FRQSEL2 to FRQSEL0 of the option byte (000C2H) R/W

Symbol	7	6	5	4	3	2	1	0
HOCODIV	0	0	0	0	0	HOCODIV2	HOCODIV1	HOCODIV0

HOCODIV2	HOCODIV1	HOCODIV0	Selection of high-speed on-chip oscillator clock frequency			
			FRQSEL4 = 0		FRQSEL4 = 1	
			FRQSEL3 = 0	FRQSEL3 = 1	FRQSEL3 = 0	FRQSEL3 = 1
0	0	0	f_{IH} = 24 MHz	f_{IH} = 32 MHz	f_{IH} = 24 MHz f_{HOCO} = 48 MHz	f_{IH} = 32 MHz f_{HOCO} = 64 MHz
0	0	1	f_{IH} = 12 MHz	f_{IH} = 16 MHz	f_{IH} = 12 MHz f_{HOCO} = 24 MHz	f_{IH} = 16 MHz f_{HOCO} = 32 MHz
0	1	0	f_{IH} = 6 MHz	f_{IH} = 8 MHz	f_{IH} = 6 MHz f_{HOCO} = 12 MHz	f_{IH} = 8 MHz f_{HOCO} = 16 MHz
0	1	1	f_{IH} = 3 MHz	f_{IH} = 4 MHz	f_{IH} = 3 MHz f_{HOCO} = 6 MHz	f_{IH} = 4 MHz f_{HOCO} = 8 MHz
1	0	0	Setting prohibited	f_{IH} = 2 MHz	Setting prohibited	f_{IH} = 2 MHz f_{HOCO} = 4 MHz
1	0	1	Setting prohibited	f_{IH} = 1 MHz	Setting prohibited	f_{IH} = 1 MHz f_{HOCO} = 2 MHz
Other than above			Setting prohibited			

Caution 1. Set the HOCODIV register within the operable voltage range of the flash operation mode set in the option byte (000C2H) before and after the frequency change.

Option Byte (000C2H) Value		Flash Operation Mode	Operating Frequency Range	Operating Voltage Range
CMODE1	CMODE0			
0	0	LV (low-voltage main) mode	1 to 4 MHz	1.6 to 5.5 V
1	0	LS (low-speed main) mode	1 to 8 MHz	1.8 to 5.5 V
1	1	HS (high-speed main) mode	1 to 16 MHz	2.4 to 5.5 V
			1 to 32 MHz	2.7 to 5.5 V
Setting prohibited		Other than above		

Caution 2. Set the HOCODIV register with the high-speed on-chip oscillator clock (f_{IH}) selected as the CPU/peripheral hardware clock (f_{CLK}).

Caution 3. After the frequency is changed with the HOCODIV register, the frequency is switched after the following transition time has elapsed.

- **Operation for up to three clocks at the pre-change frequency**
- **CPU/peripheral hardware clock wait at the post-change frequency for up to three clocks**

• HOCODIV setting flow

The frequency change flow of the high-speed on-chip oscillator is one of the following 3 flows according to the system clock selected.

Figure 5 - 14 HOCODIV Setting Flow

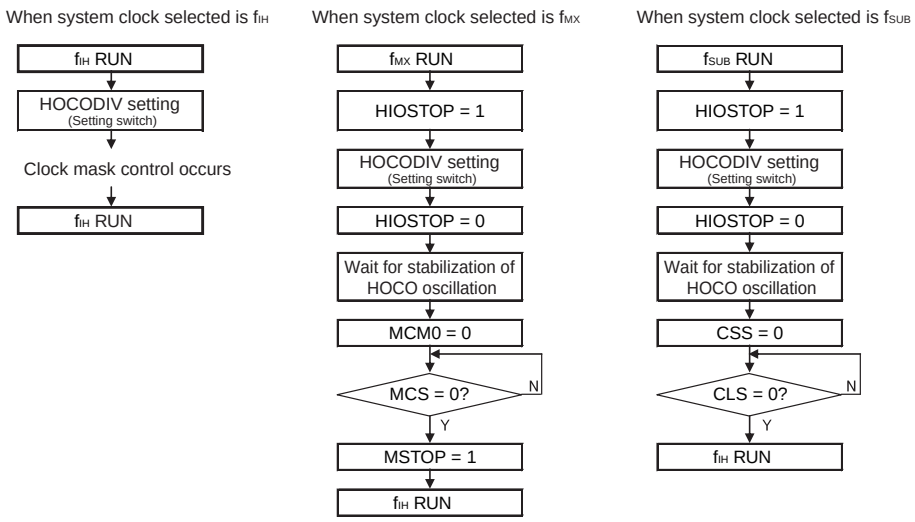

Caution 1. The frequency switches when the following transition time elapses after the frequency is changed in the HOCODIV register.

- **Up to 3 clocks at the frequency after the change**
- **CPU/peripheral hardware clock wait of up to 3 clocks at the frequency after the change**

Caution 2. Set the HOCODIV register in the voltage range in which the flash operation mode specified in the option byte (000C2H) can operate before and after the frequency change.

Caution 3. It is recommended to set the HOCODIV register with the CPU/peripheral hardware clock (f_{CLK}) selected for the high-speed on-chip oscillator clock (f_{IH}).

5.3.9 High-speed on-chip oscillator trimming register (HIOTRM)

This register is used to adjust the accuracy of the high-speed on-chip oscillator.
With self-measurement of the high-speed on-chip oscillator frequency via a timer using high-accuracy external clock input, and so on, the accuracy can be adjusted.
The HIOTRM register can be set by an 8-bit memory manipulation instruction.

Caution The frequency will vary if the temperature and V_{DD} pin voltage change after accuracy adjustment. When the temperature and V_{DD} voltage change, accuracy adjustment must be executed regularly or before the frequency accuracy is required.

Figure 5 - 15 Format of High-speed on-chip oscillator trimming register (HIOTRM)

Address: F00A0H After reset: Undefined[Note] R/W

Symbol	7	6	5	4	3	2	1	0
HIOTRM	0	0	HIOTRM5	HIOTRM4	HIOTRM3	HIOTRM2	HIOTRM1	HIOTRM0

HIOTRM5	HIOTRM4	HIOTRM3	HIOTRM2	HIOTRM1	HIOTRM0	High-speed on-chip oscillator
0	0	0	0	0	0	Minimum speed
0	0	0	0	0	1	↑
0	0	0	0	1	0	
0	0	0	0	1	1	
0	0	0	1	0	0	
• • •						
1	1	1	1	1	0	↓
1	1	1	1	1	1	Maximum speed

Note The value after reset is the value adjusted at shipment.

Remark 1. The HIOTRM register can be used to adjust the high-speed on-chip oscillator clock to an accuracy within about 0.05% on 1 bit per.

Remark 2. For the usage example of the HIOTRM register, see the application note for RL78 MCU Series High-speed On-chip Oscillator (HOCO) Clock Frequency Correction (R01AN0464).

5.4 System Clock Oscillator

5.4.1 X1 oscillator

The X1 oscillator oscillates with a crystal resonator or ceramic resonator (1 to 20 MHz) connected to the X1 and X2 pins.

An external clock can also be input. In this case, input the clock signal to the EXCLK pin.

To use the X1 oscillator, set bits 7 and 6 (EXCLK, OSCSEL) of the clock operation mode control register (CMC) as follows.

• Crystal or ceramic oscillation: EXCLK, OSCSEL = 0, 1

• External clock input: EXCLK, OSCSEL = 1, 1

When the X1 oscillator is not used, set the input port mode (EXCLK, OSCSEL = 0, 0).

When the pins are not used as input port pins, either, see **Table 2 - 3 Connection of Unused Pins**.

Figure 5 - 16 shows an example of the external circuit of the X1 oscillator.

Figure 5 - 16 Example of External Circuit of X1 Oscillator

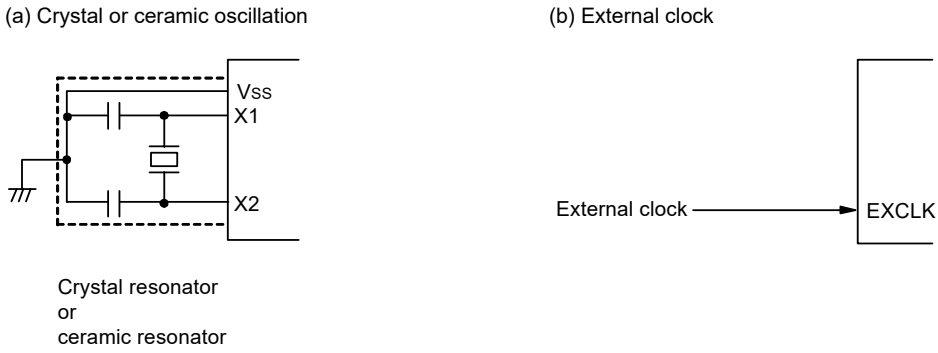

Caution is listed on the next page.

5.4.2 XT1 oscillator

The XT1 oscillator oscillates with a crystal resonator (32.768 kHz (TYP.)) connected to the XT1 and XT2 pins.

To use the XT1 oscillator, set bit 4 (OSCSELS) of the clock operation mode control register (CMC) to 1.

An external clock can also be input. In this case, input the clock signal to the EXCLKS pin.

To use the XT1 oscillator, set bits 5 and 4 (EXCLKS, OSCSELS) of the clock operation mode control register (CMC) as follows.

• Crystal oscillation:EXCLKS, OSCSELS = 0, 1

• External clock input:EXCLKS, OSCSELS = 1, 1

When the XT1 oscillator is not used, set the input port mode (EXCLKS, OSCSELS = 0, 0).

When the pins are not used as input port pins, either, see **Table 2 - 3 Connection of Unused Pins**.

Figure 5 - 17 shows an example of the external circuit of the XT1 oscillator.

Figure 5 - 17 Example of External Circuit of XT1 Oscillator

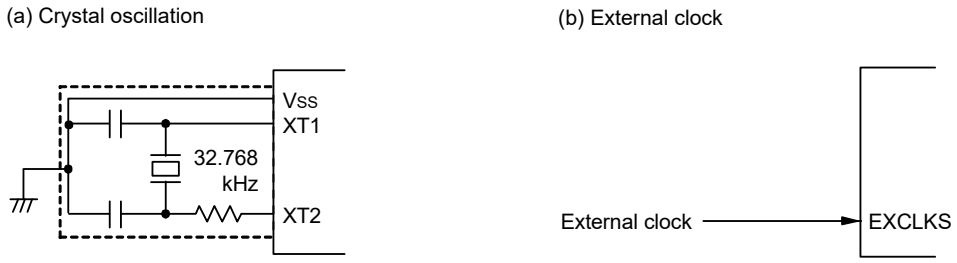

Caution **When using the X1 oscillator and XT1 oscillator, wire as follows in the area enclosed by the broken lines in the Figures 5 - 16 and 5 - 17 to avoid an adverse effect from wiring capacitance.**

- **Keep the wiring length as short as possible.**
- **Do not cross the wiring with the other signal lines. Do not route the wiring near a signal line through which a high fluctuating current flows.**
- **Always make the ground point of the oscillator capacitor the same potential as Vss. Do not ground the capacitor to a ground pattern through which a high current flows.**
- **Do not fetch signals from the oscillator.**

The XT1 oscillator is a circuit with low amplification in order to achieve low-power consumption. Note the following points when designing the circuit.

- **Pins and circuit boards include parasitic capacitance. Therefore, perform oscillation evaluation using a circuit board to be actually used and confirm that there are no problems.**
- **When using the ultra-low power consumption oscillation (AMPHS1, AMPHS0 = 1, 0) as the mode of the XT1 oscillator, evaluate the resonators.**
- **Make the wiring between the XT1 and XT2 pins and the resonators as short as possible, and minimize the parasitic capacitance and wiring resistance. Note this particularly when the ultra-low power consumption oscillation (AMPHS1, AMPHS0 = 1, 0) is selected.**
- **Configure the circuit of the circuit board, using material with little wiring resistance.**
- **Place a ground pattern that has the same potential as Vss as much as possible near the XT1 oscillator.**
- **Be sure that the signal lines between the XT1 and XT2 pins, and the resonators do not cross with the other signal lines. Do not route the wiring near a signal line through which a high fluctuating current flows.**
- **The impedance between the XT1 and XT2 pins may drop and oscillation may be disturbed due to moisture absorption of the circuit board in a high-humidity environment or dew condensation on the board. When using the circuit board in such an environment, take measures to damp-proof the circuit board, such as by coating.**
- **When coating the circuit board, use material that does not cause capacitance or leakage between the XT1 and XT2 pins.**

Figure 5 - 18 shows examples of incorrect resonator connection.

Figure 5 - 18 Examples of Incorrect Resonator Connection (1/2)

(a) Too long wiring

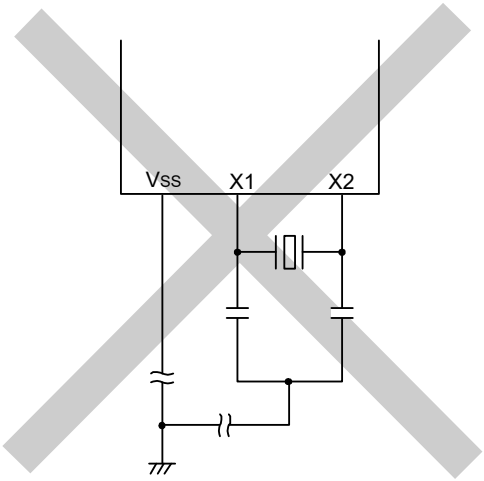

(b) Crossed signal line

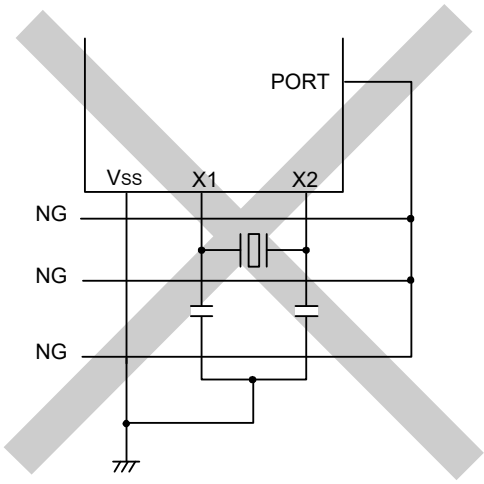

(c) The X1 and X2 signal line wires cross.

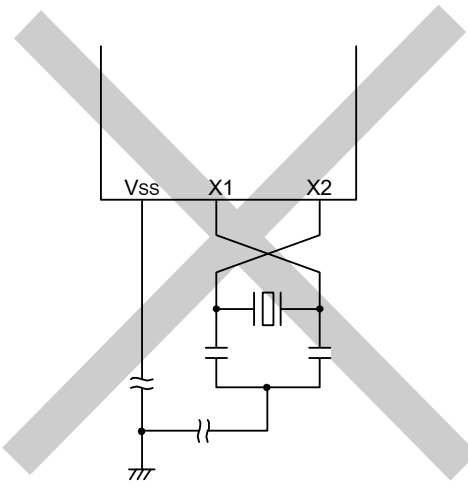

(d) A power supply/GND pattern exists under the X1 and X2 wires.

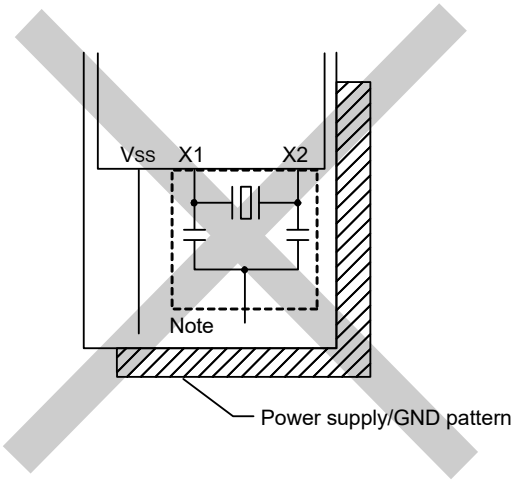

Note Do not place a power supply/GND pattern under the wiring section (section indicated by a broken line in the figure) of the X1 and X2 pins and the resonators in a multi-layer board or double-sided board.
Do not configure a layout that will cause capacitance elements and affect the oscillation characteristics.

Remark When using the subsystem clock, replace X1 and X2 with XT1 and XT2, respectively. Also, insert resistors in series on the XT2 side.

Figure 5 - 19 Examples of Incorrect Resonator Connection (2/2)

(e) Wiring near high alternating current

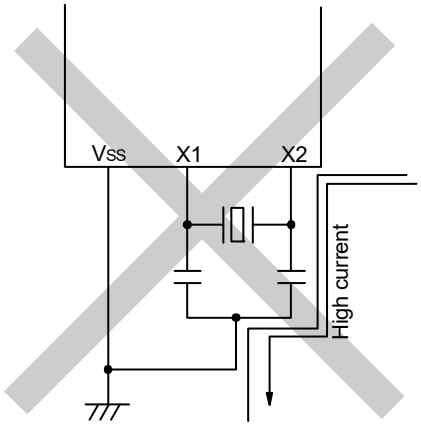

(f) Current flowing through ground line of oscillator
(potential at points A, B, and C fluctuates)

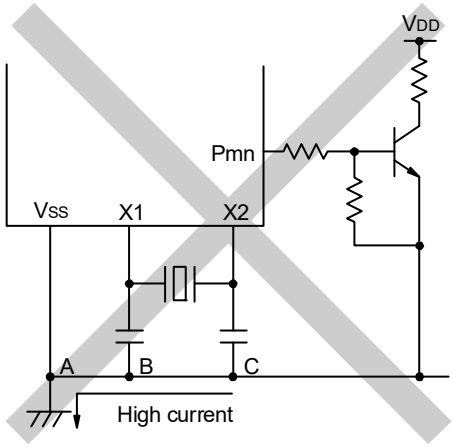

(g) Signals are fetched

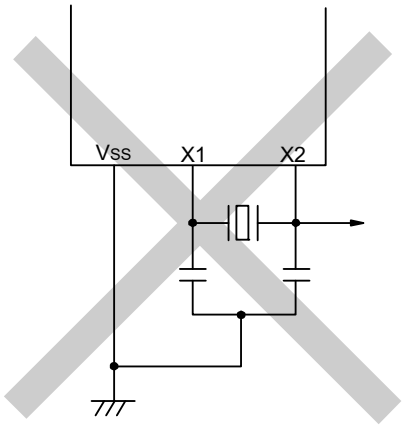

Caution **When X2 and XT1 are wired in parallel, the crosstalk noise of X2 may increase with XT1, resulting in malfunctioning.**

Remark When using the subsystem clock, replace X1 and X2 with XT1 and XT2, respectively. Also, insert resistors in series on the XT2 side.

5.4.3 High-speed on-chip oscillator

The high-speed on-chip oscillator is incorporated in the RL78/G1F. The frequency can be selected from among 64, 48, 32, 24, 16, 12, 8, 6, 4, 3, 2, or 1 MHz by using the option byte (000C2H). When 64 MHz or 48 MHz is selected, the two frequency division of the selected clock is supplied to CPU clock. Oscillation can be controlled by bit 0 (HIOSTOP) of the clock operation status control register (CSC).

The high-speed on-chip oscillator automatically starts oscillating after reset release.

5.4.4 Low-speed on-chip oscillator

The low-speed on-chip oscillator is incorporated in the RL78/G1F.

The low-speed on-chip oscillator clock is used only as the watchdog timer, real-time clock, 12-bit interval timer, and timer RJ clock. The low-speed on-chip oscillator clock cannot be used as the CPU clock.

This clock operates when bit 4 (WDTON) of the option byte (000C0H), bit 4 (WUTMMCK0) of the subsystem clock supply mode control register (OSMC), or both are set to 1.

Unless the watchdog timer is stopped and WUTMMCK0 is a value other than zero, oscillation of the low-speed on-chip oscillator continues. Note that only when the watchdog timer is operating and the WUTMMCK0 bit is 0, oscillation of the low-speed on-chip oscillator will stop while the WDSTBYON bit is 0 and operation is in the HALT, STOP, or SNOOZE mode. While the watchdog timer operates, the low-speed on-chip oscillator clock does not stop even if the program freezes.

5.5 Clock Generator Operation

The clock generator generates the following clocks and controls the operation modes of the CPU, such as standby mode (see **Figure 5 - 1**).

- Main system clock f_{MAIN}
  - High-speed system clock f_{MX}
    X1 clock f_X
    External main system clock f_{EX}
  - High-speed on-chip oscillator clock f_{IH}
- Subsystem clock f_{SUB}
  - XT1 clock f_{XT}
  - External subsystem clock f_{EXS}
- Low-speed on-chip oscillator clock f_{IL}
- CPU/peripheral hardware clock f_{CLK}

The CPU starts operation when the high-speed on-chip oscillator starts outputting after a reset release in the RL78/G1F.
When the power supply voltage is turned on, the clock generator operation is shown in Figure 5 - 20.

Figure 5 - 20 Clock Generator Operation When Power Supply Voltage Is Turned On

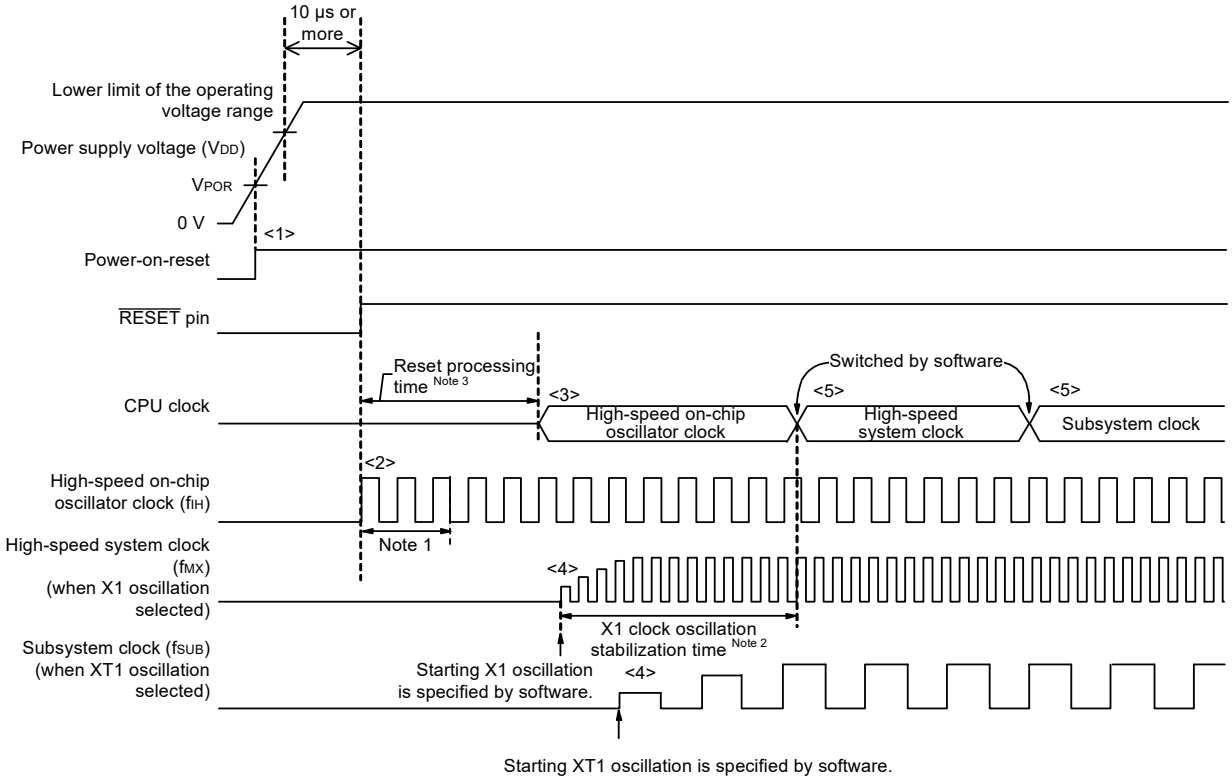

<1> When the power is turned on, an internal reset signal is generated by the power-on-reset (POR) circuit.
Note that the reset state is maintained after a reset by the voltage detection circuit or an external reset until the voltage reaches the range of operating voltage described in **37.4** or **38.4 AC Characteristics** (the above figure is an example when the external reset is in use).

<2> When the reset is released, the high-speed on-chip oscillator automatically starts oscillation.

<3> The CPU starts operation on the high-speed on-chip oscillator clock after waiting for the voltage to stabilize and a reset processing have been performed after reset release.

<4> Set the start of oscillation of the X1 or XT1 clock via software (see **5.6.2 Example of setting X1 oscillation clock** and **5.6.3 Example of setting XT1 oscillation clock**).

<5> When switching the CPU clock to the X1 or XT1 clock, wait for the clock oscillation to stabilize, and then set switching via software (see **5.6.2 Example of setting X1 oscillation clock** and **5.6.3 Example of setting XT1 oscillation clock**).

Note 1. The internal reset processing time includes the oscillation accuracy stabilization time of the high-speed on chip oscillator clock.

Note 2. When releasing a reset, confirm the oscillation stabilization time for the X1 clock using the oscillation stabilization time counter status register (OSTC).

Note 3. For the reset processing time, see **CHAPTER 28 POWER-ON-RESET CIRCUIT**.

Caution **It is not necessary to wait for the oscillation stabilization time when an external clock input from the EXCLK pin is used.**

5.6 Controlling Clock

5.6.1 Example of setting high-speed on-chip oscillator

After a reset release, the CPU/peripheral hardware clock (f_{CLK}) always starts operating with the high-speed on-chip oscillator clock. The frequency of the high-speed on-chip oscillator can be selected from 64, 48, 32, 24, 16, 12, 8, 6, 4, 3, 2, and 1 MHz by using FRQSEL0 to FRQSEL4 of the option byte (000C2H). In addition, Oscillation can be changed by the high-speed on-chip oscillator frequency select register (HOCODIV).

[Option byte setting]

Address: 000C2H

Option byte (000C2H)	7	6	5	4	3	2	1	0
	CMODE1 0/1	CMODE0 0/1	1	FRQSEL4 0/1	FRQSEL3 0/1	FRQSEL2 0/1	FRQSEL1 0/1	FRQSEL0 0/1

CMODE1	CMODE0	Setting of flash operation mode	
0	0	LV (low-voltage main) mode	V_{DD} = 1.6 V to 5.5 V @ 1 MHz to 4 MHz
1	0	LS (low-speed main) mode	V_{DD} = 1.8 V to 5.5 V @ 1 MHz to 8 MHz
1	1	HS (high-speed main) mode	V_{DD} = 2.4 V to 5.5 V @ 1 MHz to 16 MHz V_{DD} = 2.7 V to 5.5 V @ 1 MHz to 32 MHz
Other than above		Setting prohibited	

FRQSEL4	FRQSEL3	FRQSEL2	FRQSEL1	FRQSEL0	Frequency of the high-speed on-chip oscillator	
					f_{HOCO}	f_{IH}
1	1	0	0	0	64 MHz	32 MHz
1	0	0	0	0	48 MHz	24 MHz
0	1	0	0	0	32 MHz	32 MHz
0	0	0	0	0	24 MHz	24 MHz
0	1	0	0	1	16 MHz	16 MHz
0	0	0	0	1	12 MHz	12 MHz
0	1	0	1	0	8 MHz	8 MHz
0	0	0	1	0	6 MHz	6 MHz
0	1	0	1	1	4 MHz	4 MHz
0	0	0	1	1	3 MHz	3 MHz
0	1	1	0	0	2 MHz	2 MHz
0	1	1	0	1	1 MHz	1 MHz
Other than above					Setting prohibited	

[High-speed on-chip oscillator frequency select register (HOCODIV) setting]

Address: F00A8H

Symbol	7	6	5	4	3	2	1	0
HOCODIV	0	0	0	0	0	HOCODIV2	HOCODIV1	HOCODIV0

HOCODIV2	HOCODIV1	HOCODIV0	Selection of high-speed on-chip oscillator clock frequency			
			FRQSEL4 = 0		FRQSEL4 = 1	
			FRQSEL3 = 0	FRQSEL3 = 1	FRQSEL3 = 0	FRQSEL3 = 1
0	0	0	f_{IH} = 24 MHz	f_{IH} = 32 MHz	f_{IH} = 24 MHz f_{HOCO} = 48 MHz	f_{IH} = 32 MHz f_{HOCO} = 64 MHz
0	0	1	f_{IH} = 12 MHz	f_{IH} = 16 MHz	f_{IH} = 12 MHz f_{HOCO} = 24 MHz	f_{IH} = 16 MHz f_{HOCO} = 32 MHz
0	1	0	f_{IH} = 6 MHz	f_{IH} = 8 MHz	f_{IH} = 6 MHz f_{HOCO} = 12 MHz	f_{IH} = 8 MHz f_{HOCO} = 16 MHz
0	1	1	f_{IH} = 3 MHz	f_{IH} = 4 MHz	f_{IH} = 3 MHz f_{HOCO} = 6 MHz	f_{IH} = 4 MHz f_{HOCO} = 8 MHz
1	0	0	Setting prohibited	f_{IH} = 2 MHz	Setting prohibited	f_{IH} = 2 MHz f_{HOCO} = 4 MHz
1	0	1	Setting prohibited	f_{IH} = 1 MHz	Setting prohibited	f_{IH} = 1 MHz f_{HOCO} = 2 MHz
Other than above			Setting prohibited			

5.6.2 Example of setting X1 oscillation clock

After a reset release, the CPU/peripheral hardware clock (f_{CLK}) always starts operating with the high-speed on-chip oscillator clock. To subsequently change the clock to the X1 oscillation clock, set the oscillator and start oscillation by using the oscillation stabilization time select register (OSTS), clock operation mode control register (CMC), and clock operation status control register (CSC) and wait for oscillation to stabilize by using the oscillation stabilization time counter status register (OSTC). After the oscillation stabilizes, set the X1 oscillation clock to f_{CLK} by using the system clock control register (CKC).

[Register settings] Set the register in the order of <1> to <5> below.

<1> Set (1) the OSCSEL bit of the CMC register, except for the cases where the fx is equal to or more than 10 MHz, in such cases set (1) the AMPH bit, to operate the X1 oscillator.

	7	6	5	4	3	2	1	0
CMC	EXCLK 0	OSCSEL 1	EXCLKS 0	OSCSELS 0	0	AMPHS1 0	AMPHS0 0	AMPH 0/1

<2> Using the OSTS register, select the oscillation stabilization time of the X1 oscillator at releasing of the STOP mode.

Example: Setting values when a wait of at least 102 μs is set based on a 10 MHz resonator.

	7	6	5	4	3	2	1	0
OSTS	0	0	0	0	0	OSTS2 0	OSTS1 1	OSTS0 0

<3> Clear (0) the MSTOP bit of the CSC register to start oscillating the X1 oscillator.

	7	6	5	4	3	2	1	0
CSC	MSTOP 0	XTSTOP 1	0	0	0	0	0	HIOSTOP 0

<4> Use the OSTC register to wait for oscillation of the X1 oscillator to stabilize.

Example: Wait until the bits reach the following values when a wait of at least 102 μs is set based on a 10 MHz resonator.

	7	6	5	4	3	2	1	0
OSTC	MOST8 1	MOST9 1	MOST10 1	MOST11 0	MOST13 0	MOST15 0	MOST17 0	MOST18 0

<5> Use the MCM0 bit of the CKC register to specify the X1 oscillation clock as the CPU/peripheral hardware clock.

	7	6	5	4	3	2	1	0
CKC	CLS 0	CSS 0	MCS 0	MCM0 1	0	0	0	0

5.6.3 Example of setting XT1 oscillation clock

After a reset release, the CPU/peripheral hardware clock (f_{CLK}) always starts operating with the high-speed on-chip oscillator clock. To subsequently change the clock to the XT1 oscillation clock, set the oscillator and start oscillation by using the subsystem clock supply mode control register (OSMC), clock operation mode control register (CMC), and clock operation status control register (CSC), set the XT1 oscillation clock to f_{CLK} by using the system clock control register (CKC).

[Register settings] Set the register in the order of <1> to <5> below.

<1> Set the RTCLPC bit to 1 to run only the real-time clock, and 12-bit interval timer on the subsystem clock (for ultra-low current consumption) in the STOP mode or HALT mode during CPU operation on the subsystem clock.

	7	6	5	4	3	2	1	0
OSMC	RTCLPC 0/1	 0	 0	WUTMMCK0 0	 0	 0	 0	 0

<2> Set (1) the OSCSELS bit of the CMC register to operate the XT1 oscillator.

	7	6	5	4	3	2	1	0
CMC	EXCLK 0	OSCSEL 0	EXCLKS 0	OSCSELS 1	 0	AMPHS1 0/1	AMPHS0 0/1	AMPH 0

AMPHS0 and AMPHS1 bits: These bits are used to specify the oscillation mode of the XT1 oscillator.

<3> Clear (0) the XTSTOP bit of the CSC register to start oscillating the XT1 oscillator.

	7	6	5	4	3	2	1	0
CSC	MSTOP 1	XTSTOP 0	 0	 0	 0	 0	 0	HIOSTOP 0

<4> Use the timer function or another function to wait for oscillation of the subsystem clock to stabilize by using software.

<5> Use the CSS bit of the CKC register to specify the XT1 oscillation clock as the CPU/peripheral hardware clock.

	7	6	5	4	3	2	1	0
CKC	CLS 0	CSS 1	MCS 0	MCM0 0	 0	 0	 0	 0

5.6.4 CPU clock status transition diagram

Figure 5 - 21 shows the CPU clock status transition diagram of this product.

Figure 5 - 21 CPU Clock Status Transition Diagram

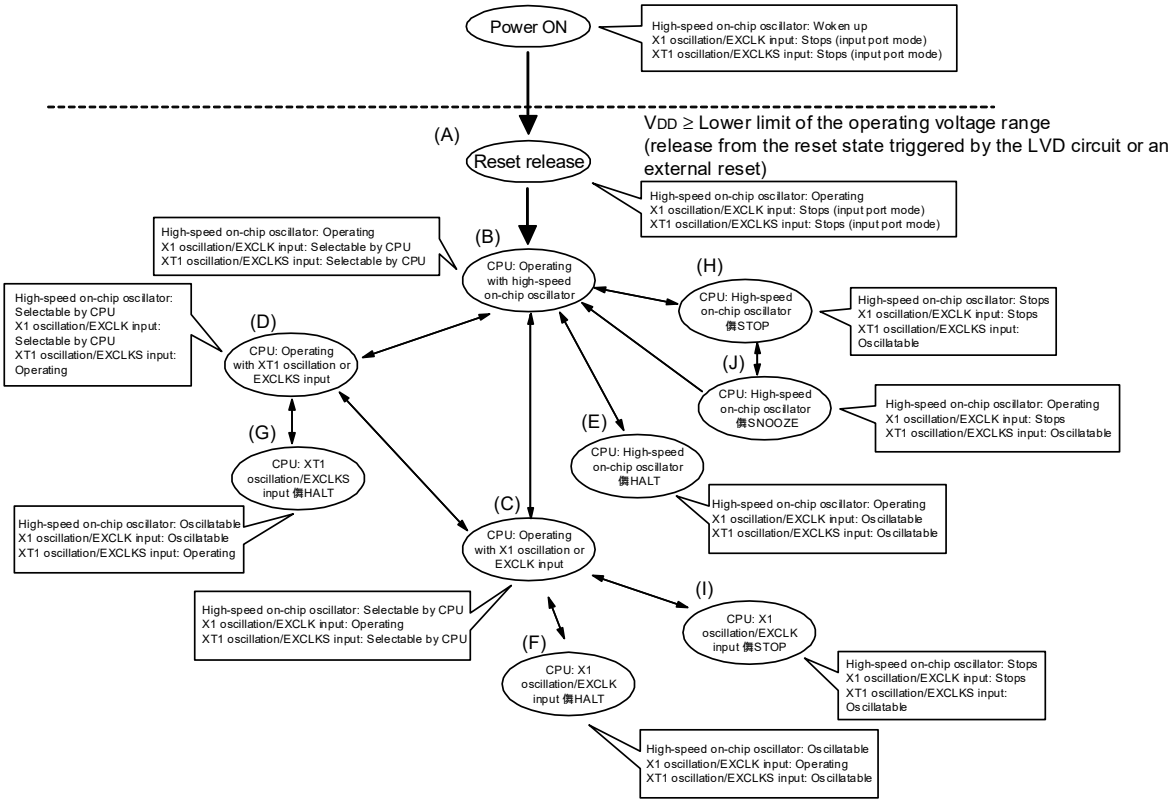

Tables 5 - 3 to 5 - 7 show transition of the CPU clock and examples of setting the SFR registers.

Table 5 - 3 CPU Clock Transition and SFR Register Setting Examples (1/5)

(1) CPU operating with high-speed on-chip oscillator clock (B) after reset release (A)

Status Transition	SFR Register Setting
(A) → (B)	SFR registers do not have to be set (default status after reset release).

(2) CPU operating with high-speed system clock (C) after reset release (A)
(The CPU operates with the high-speed on-chip oscillator clock immediately after a reset release (B).)

(Setting sequence of SFR registers) →

Setting Flag of SFR Register / Status Transition	CMC Register[Note 1]			OSTS Register	CSC Register	OSTC Register	CKC Register
	EXCLK	OSCSEL	AMPH		MSTOP		MCM0
(A) → (B) → (C) (X1 clock: 1 MHz ≤ fx ≤ 10 MHz)	0	1	0	Note 2	0	Must be checked	1
(A) → (B) → (C) (X1 clock: 10 MHz < fx ≤ 20 MHz)	0	1	1	Note 2	0	Must be checked	1
(A) → (B) → (C) (external main clock)	1	1	×	Note 2	0	Must not be checked	1

Note 1. The clock operation mode control register (CMC) can be written only once by an 8-bit memory manipulation instruction after reset release.

Note 2. Set the oscillation stabilization time as follows.

- Desired the oscillation stabilization time counter status register (OSTC) oscillation stabilization time ≤ Oscillation stabilization time set by the oscillation stabilization time select register (OSTS)

Caution **Set the clock after the supply voltage has reached the operable voltage of the clock to be set (see CHAPTER 37 or CHAPTER 38 ELECTRICAL SPECIFICATIONS).**

(3) CPU operating with subsystem clock (D) after reset release (A)
(The CPU operates with the high-speed on-chip oscillator clock immediately after a reset release (B).)

(Setting sequence of SFR registers) →

Setting Flag of SFR Register / Status Transition	CMC Register[Note]				CSC Register	Waiting for Oscillation Stabilization	CKC Register
	EXCLKS	OSCSELS	AMPHS1	AMPHS0	XTSTOP		CSS
(A) → (B) → (C) (XT1 clock)	0	1	0/1	0/1	0	Necessary	1
(A) → (B) → (C) (external sub clock)	1	1	×	×	0	Necessary	1

Note The clock operation mode control register (CMC) can be written only once by an 8-bit memory manipulation instruction after reset release.

Remark 1. ×: Don't care

Remark 2. (A) to (J) in Tables 5 - 3 to 5 - 7 correspond to (A) to (J) in Figure 5 - 21.

Table 5 - 4 CPU Clock Transition and SFR Register Setting Examples (2/5)

(4) CPU clock changing from high-speed on-chip oscillator clock (B) to high-speed system clock (C)

(Setting sequence of SFR registers) →

Setting Flag of SFR Register / Status Transition	CMC Register[Note 1]			OSTS Register	CSC Register	OSTC Register	CKC Register
	EXCLK	OSCSEL	AMPH		MSTOP		MCM0
(B) → (C) (XT1 clock: 1 MHz ≤ fx ≤ 10 MHz)	0	1	0	Note 2	0	Must be checked	1
(B) → (C) (XT1 clock: 10 MHz < fx ≤ 20 MHz)	0	1	1	Note 2	0	Must be checked	1
(B) → (C) (external main clock)	1	1	×	Note 2	0	Need not be checked	1

Unnecessary if these registers are already set

Unnecessary if the CPU is operating with the high-speed system clock

Note 1. The clock operation mode control register (CMC) can be changed only once after reset release. This setting is not necessary if it has already been set.

Note 2. Set the oscillation stabilization time as follows.

- Desired the oscillation stabilization time counter status register (OSTC) oscillation stabilization time ≤ Oscillation stabilization time set by the oscillation stabilization time select register (OSTS)

Caution **Set the clock after the supply voltage has reached the operable voltage of the clock to be set (see CHAPTER 37 or CHAPTER 38 ELECTRICAL SPECIFICATIONS).**

(5) CPU clock changing from high-speed on-chip oscillator clock (B) to subsystem clock (D)

(Setting sequence of SFR registers) →

Setting Flag of SFR Register / Status Transition	CMC Register [Note]			CSC Register	Waiting for Oscillation Stabilization	CKC Register
	EXCLKS	OSCSELS	AMPHS1,0	XTSTOP		CSS
(B) → (D) (XT1 clock)	0	1	00: Low power consumption oscillation 01: Normal oscillation 10: Ultra-low power consumption oscillation	0	Necessary	1
(B) → (D) (external sub clock)	1	1	×	0	Necessary	1

Unnecessary if these registers are already set

Unnecessary if the CPU is operating with the subsystem clock

Note The clock operation mode control register (CMC) can be written only once by an 8-bit memory manipulation instruction after reset release. This setting is not necessary if it has already been set.

Remark 1. ×: Don't care

Remark 2. (A) to (J) in Tables 5 - 3 to 5 - 7 correspond to (A) to (J) in Figure 5 - 21.

Table 5 - 5 CPU Clock Transition and SFR Register Setting Examples (3/5)

(6) CPU clock changing from high-speed system clock (C) to high-speed on-chip oscillator clock (B)

(Setting sequence of SFR registers) →

Setting Flag of SFR Register / Status Transition	CSC Register	Oscillation accuracy stabilization time	CKC Register
	HIOSTOP		MCM0
(C) → (B)	0	Note	0

Unnecessary if the CPU is operating with the high-speed on-chip oscillator clock

Note When FRQSEL4 = 0: 18 μs to 65 μs
When FRQSEL4 = 1: 18 μs to 135 μs

Remark The oscillation accuracy stabilization time changes according to the temperature conditions and the STOP mode period.

(7) CPU clock changing from high-speed system clock (C) to subsystem clock (D)

(Setting sequence of SFR registers) →

Setting Flag of SFR Register / Status Transition	CSC Register	Waiting for Oscillation Stabilization	CKC Register
	XTSTOP		CSS
(C) → (D)	0	Necessary	1

Unnecessary if the CPU is operating with the subsystem clock

(8) CPU clock changing from subsystem clock (D) to high-speed on-chip oscillator clock (B)

(Setting sequence of SFR registers) →

Setting Flag of SFR Register / Status Transition	CSC Register	Waiting for Oscillation Stabilization	CKC Register
	HIOSTOP		CSS
(D) → (B)	0	Note	0

Unnecessary if the CPU is operating with the high-speed on-chip oscillator clock

Note When FRQSEL4 = 0: 18 μs to 65 μs
When FRQSEL4 = 1: 18 μs to 135 μs

Remark 1. (A) to (J) in Tables 5 - 3 to 5 - 7 correspond to (A) to (J) in Figure 5 - 21.
Remark 2. The oscillation accuracy stabilization time changes according to the temperature conditions and the STOP mode period.

Table 5 - 6 CPU Clock Transition and SFR Register Setting Examples (4/5)

(9) CPU clock changing from subsystem clock (D) to high-speed system clock (C)

(Setting sequence of SFR registers) →

Setting Flag of SFR Register / Status Transition	OSTS Register	CSC Register	OSTC Register	CKC Register
		MSTOP		CSS
(D) → (C) (X1 clock: 1 MHz ≤ fx ≤ 10 MHz)	Note	0	Must be checked	0
(D) → (C) (X1 clock: 10 MHz < fx ≤ 20 MHz)	Note	0	Must be checked	0
(D) → (C) (external main clock)	Note	0	Need not be checked	0

Unnecessary if the CPU is operating with the high-speed system clock

Note Set the oscillation stabilization time as follows.
- Desired the oscillation stabilization time counter status register (OSTC) oscillation stabilization time ≤ Oscillation stabilization time set by the oscillation stabilization time select register (OSTS)

Caution **Set the clock after the supply voltage has reached the operable voltage of the clock to be set (see CHAPTER 37 or CHAPTER 38 ELECTRICAL SPECIFICATIONS).**

(10)
- HALT mode (E) set while CPU is operating with high-speed on-chip oscillator clock (B)
- HALT mode (F) set while CPU is operating with high-speed system clock (C)
- HALT mode (G) set while CPU is operating with subsystem clock (D)

Status Transition	Setting
(B) → (E) (C) → (F) (D) → (G)	Executing HALT instruction

Remark (A) to (J) in Tables 5 - 3 to 5 - 7 correspond to (A) to (J) in Figure 5 - 21.

Table 5 - 7 CPU Clock Transition and SFR Register Setting Examples (5/5)

(11) • STOP mode (H) set while CPU is operating with high-speed on-chip oscillator clock (B)
• STOP mode (I) set while CPU is operating with high-speed system clock (C)

(Setting sequence) →

Status Transition		Setting		
(B) → (H)		Stopping peripheral functions that cannot operate in STOP mode	—	Executing STOP instruction
(C) → (I)	In X1 oscillation		Sets the OSTS register	
	External main system clock		—	

(12) CPU changing from STOP mode (H) to SNOOZE mode (J)
For details about the setting for switching from the STOP mode to the SNOOZE mode, see **15.8 SNOOZE Mode Function**, **19.5.7 SNOOZE mode function**, and **19.7.3 SNOOZE mode function**.

Remark (A) to (J) in Tables 5 - 3 to 5 - 7 correspond to (A) to (J) in Figure 5 - 21.

5.6.5 Condition before changing CPU clock and processing after changing CPU clock

Condition before changing the CPU clock and processing after changing the CPU clock are shown below.

Table 5 - 8 Changing CPU Clock (1/2)

CPU Clock		Condition Before Change	Processing After Change
Before Change	After Change		
High-speed on-chip oscillator clock	X1 clock	Stabilization of X1 oscillation • OSCSEL = 1, EXCLK = 0, MSTOP = 0 • After elapse of oscillation stabilization time	The operating current can be reduced by stopping the high-speed on-chip oscillator (HIOSTOP = 1) after checking that the CPU clock is changed.
	External main system clock	Enabling input of external clock from the EXCLK pin • OSCSEL = 1, EXCLK = 1, MSTOP = 0	
	XT1 clock	Stabilization of XT1 oscillation • OSCSELS = 1, EXCLKS = 0, XTSTOP = 0 • After elapse of oscillation stabilization time	
	External subsystem clock	Enabling input of external clock from the EXCLKS pin • OSCSELS = 1, EXCLKS = 1, XTSTOP = 0	
X1 clock	High-speed on-chip oscillator clock	Enabling oscillation of high-speed on-chip oscillator • HIOSTOP = 0 • After elapse of oscillation stabilization time	X1 oscillation can be stopped (MSTOP = 1) after checking that the CPU clock is changed.
	External main system clock	Transition not possible	—
	XT1 clock	Stabilization of XT1 oscillation • OSCSELS = 1, EXCLKS = 0, XTSTOP = 0 • After elapse of oscillation stabilization time	X1 oscillation can be stopped (MSTOP = 1) after checking that the CPU clock is changed.
	External subsystem clock	Enabling input of external clock from the EXCLKS pin • OSCSELS = 1, EXCLKS = 1, XTSTOP = 0	X1 oscillation can be stopped (MSTOP = 1) after checking that the CPU clock is changed.
External main system clock	High-speed on-chip oscillator clock	Enabling oscillation of high-speed on-chip oscillator • HIOSTOP = 0 • After elapse of oscillation stabilization time	External main system clock input can be disabled (MSTOP = 1).
	X1 clock	Transition not possible	—
	XT1 clock	Stabilization of XT1 oscillation • OSCSELS = 1, EXCLKS = 0, XTSTOP = 0 • After elapse of oscillation stabilization time	External main system clock input can be disabled (MSTOP = 1).
	External subsystem clock	Enabling input of external clock from the EXCLKS pin • OSCSELS = 1, EXCLKS = 1, XTSTOP = 0	External main system clock input can be disabled (MSTOP = 1).

Table 5 - 9 Changing CPU Clock (2/2)

CPU Clock		Condition Before Change	Processing After Change
Before Change	After Change		
XT1 clock	High-speed on-chip oscillator clock	Oscillation of high-speed on-chip oscillator and selection of high-speed on-chip oscillator clock as main system clock • HIOSTOP = 0, MCS = 0	XT1 oscillation can be stopped (XTSTOP = 1)
	X1 clock	Stabilization of X1 oscillation and selection of high-speed system clock as main system clock • OSCSEL = 1, EXCLK = 0, MSTOP = 0 • After elapse of oscillation stabilization time • MCS = 1	
	External main system clock	Enabling input of external clock from the EXCLK pin and selection of high-speed system clock as main system clock • OSCSEL = 1, EXCLK = 1, MSTOP = 0 • MCS = 1	
	External subsystem clock	Transition not possible	—
External subsystem clock	High-speed on-chip oscillator clock	Oscillation of high-speed on-chip oscillator and selection of high-speed on-chip oscillator clock as main system clock • HIOSTOP = 0, MCS = 0	External subsystem clock input can be disabled (XTSTOP = 1).
	X1 clock	Stabilization of X1 oscillation and selection of high-speed system clock as main system clock • OSCSEL = 1, EXCLK = 0, MSTOP = 0 • After elapse of oscillation stabilization time • MCS = 1	
	External main system clock	Enabling input of external clock from the EXCLK pin and selection of high-speed system clock as main system clock • OSCSEL = 1, EXCLK = 1, MSTOP = 0 • MCS = 1	
	XT1 clock	Transition not possible	—

5.6.6 Time required for switchover of CPU clock and main system clock

By setting bits 4 and 6 (MCM0, CSS) of the system clock control register (CKC), the CPU clock can be switched (between the main system clock and the subsystem clock), and main system clock can be switched (between the high-speed on-chip oscillator clock and the high-speed system clock).

The actual switchover operation is not performed immediately after rewriting to the CKC register; operation continues on the pre-switchover clock for several clocks (see **Tables 5 - 10** to **5 - 12**).

Whether the CPU is operating on the main system clock or the subsystem clock can be ascertained using bit 7 (CLS) of the CKC register. Whether the main system clock is operating on the high-speed system clock or high-speed on-chip oscillator clock can be ascertained using bit 5 (MCS) of the CKC register.

When the CPU clock is switched, the peripheral hardware clock is also switched.

Table 5 - 10 Maximum Time Required for Main System Clock Switchover

Clock A	Switching directions	Clock B	Remark
f_{IH}	↔	f_{MX}	See **Table 5 - 11**
f_{MAIN}	↔	f_{SUB}	See **Table 5 - 12**

Table 5 - 11 Maximum Number of Clocks Required for f_{IH} ↔ f_{MX}

Set Value Before Switchover		Set Value After Switchover	
MCM0		MCM0	
		0 ($f_{MAIN} = f_{IH}$)	1 ($f_{MAIN} = f_{MX}$)
0 ($f_{MAIN} = f_{IH}$)	$f_{MX} \geq f_{IH}$		2 clock
	$f_{MX} < f_{IH}$		1 + f_{IH}/f_{MX} clock
1 ($f_{MAIN} = f_{IH}$)	$f_{MX} \geq f_{IH}$	2 f_{MX}/f_{IH} clock	
	$f_{MX} < f_{IH}$	2 clock	

Table 5 - 12 Maximum Number of Clocks Required for f_{MAIN} ↔ f_{SUB}

Set Value Before Switchover	Set Value After Switchover	
CSS	CSS	
	0 ($f_{CLK} = f_{MAIN}$)	1 ($f_{CLK} = f_{SUB}$)
0 ($f_{CLK} = f_{MAIN}$)		1 + 2 f_{MAIN}/f_{SUB} clock
1 ($f_{CLK} = f_{SUB}$)	3 clock	

Remark 1. The number of clocks listed in Tables 5 - 11 and 5 - 12 is the number of CPU clocks before switchover.

Remark 2. Calculate the number of clocks in Tables 5 - 11 and 5 - 12 by rounding up the number after the decimal position.

Example: When switching the main system clock from the high-speed system clock to the high-speed on-chip oscillator clock (@ oscillation with f_{IH} = 8 MHz, f_{MX} = 10 MHz)

2 f_{MX}/f_{IH} = 2 (10/8) = 2.5 → 3 clocks

5.6.7 Conditions before clock oscillation is stopped

The following lists the register flag settings for stopping the clock oscillation (disabling external clock input) and conditions before the clock oscillation is stopped. Before stopping the clock oscillation, check the conditions before the clock oscillation is stopped.

Table 5 - 13 Conditions Before the Clock Oscillation Is Stopped and Flag Settings

Clock	Conditions Before Clock Oscillation Is Stopped (External Clock Input Disabled)	Flag Settings of SFR Register
High-speed on-chip oscillator clock	MCS = 1 or CLS = 1 (The CPU is operating on a clock other than the high-speed on-chip oscillator clock.)	HIOSTOP = 1
X1 clock External main system clock	MCS = 0 or CLS = 1 (The CPU is operating on a clock other than the high-speed system clock.)	MSTOP = 1
XT1 clock External subsystem clock	CLS = 0 (The CPU is operating on a clock other than the subsystem clock.)	XTSTOP = 1

5.7 Resonator and Oscillator Constants

The resonators for which the operation is verified and their oscillator constants are shown below.

Caution 1. The constants for these oscillator circuits are reference values based on specific environments set up for evaluation by the manufacturers. For actual applications, request evaluation by the manufacturer of the oscillator circuit mounted on a board. Furthermore, if you are switching from a different product to this microcontroller, and whenever you change the board, again request evaluation by the manufacturer of the oscillator circuit mounted on the new board.

Caution 2. The oscillation voltage and oscillation frequency only indicate the oscillator characteristic. Use the RL78 microcontroller so that the internal operation conditions are within the specifications of the DC and AC characteristics.

Figure 5 - 22 Example of External Circuit

(a) X1 oscillation

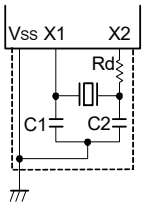

(b) XT1 oscillation

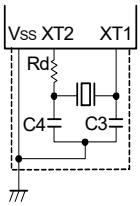

(1) X1 oscillation

As of Mar 2015

Manufacturer	Resonator	Part Number	SMD/ Lead	Frequency (MHz)	Flash Operation Mode[Note 1]	Circuit Constants (Reference)[Note 2]			Voltage Range (V)	
						C1 (pF)	C2 (pF)	Rd (kΩ)	MIN.	MAX.
Murata Manufacturing Co., Ltd.[Note 3]	Ceramic oscillator	CSTCC2M00G56-R0	SMD	2.0	LV	(47)	(47)	0	1.6	5.5
		CSTCR4M00G55-R0	SMD			(39)	(39)	0		
		CSTLS4M00G53-B0	Lead			(15)	(15)	0		
		CSACN4M00G530000R0	SMD	4.0		15	15	0		
		CSTCC2M00G56-R0	SMD	2.0	LS	(47)	(47)	0	1.8	5.5
		CSTCR4M00G55-R0	SMD	4.0		(39)	(39)	0		
		CSTLS4M00G53-B0	Lead	4.0		(15)	(15)	0		
		CSACN4M00G530000R0	SMD	4.0		15	15	0		
		CSTCE8M00G52-R0	SMD	8.0		(10)	(10)	0		
		CSTLS8M00G53-B0	Lead	8.0		(15)	(15)	0		
		CSTCC2M00G56-R0	SMD	2.0		(47)	(47)	0		
		CSTCR4M00G55-R0	SMD	4.0		(39)	(39)	0		
		CSTLS4M00G53-B0	Lead	4.0		(15)	(15)	0		
		CSACN4M00G530000R0	SMD	4.0		15	15	0		
		CSTCE8M00G52-R0	SMD	8.0		(10)	(10)	0		
		CSTLS8M00G53-B0	Lead	8.0		(15)	(15)	0		
		CSACM8M00G530005R0	SMD	8.0		10	10	0		
		CSTCE10M0G52-R0	SMD	10.0		(15)	(15)	0		
		CSTLS10M0G53-B0	Lead	10.0		(15)	(15)	0		
		CSACM10M0G530005R0	SMD	10.0		10	10	0		
		CSTCE12M0G52-R0	SMD	12.0		(10)	(10)	0		
		CSACM12M0G530005R0	SMD	12.0		10	10	0		
		CSTCE16M0V53-R0	SMD	16.0		(15)	(15)	0		
		CSTLS16M0X51-B0	Lead	16.0		(5)	(5)	0		
		CSTCE20M0V51-R0	SMD	20.0		(5)	(5)	0		
		CSTLS20M0X51-B0	Lead	20.0		(5)	(5)	0		
KYOCERA Crystal Device Corporation Note 4	Crystal resonator	CX8045GB04000D0PPS01	SMD	4.0	LV	10	10	0	1.6	5.5
		CX8045GB04000D0PPS01	SMD	4.0	LS	10	10	0	1.8	5.5
		CX8045GB08000D0PPS01	SMD	8.0		4	4	0		
		CX8045GB04000D0PPS01	SMD	4.0	HS	12	12	0	2.4	5.5
		CX8045GB08000D0PPS01	SMD	8.0		10	10	0		
		CX3225CA10000D0PPSC1	SMD	10.0		8	8	0		
		CX2016DB16000D0PPSC1	SMD	16.0		6	6	0		
		CX2016DB20000D0PPSC1	SMD	20.0		6	6	0	2.7	5.5

Note 1. Set the flash operation mode by using the CMODE1 and CMODE0 bits of the option byte (000C2H).

Note 2. Values in parentheses in the C1 and C2 columns indicate an internal capacitance.

Note 3. When using these resonators, contact Murata Manufacturing Company, Ltd. (http://www.murata.co.jp) for more information on matching.
Also, products compatible with 105°C have different part numbers. Contact Murata Manufacturing Company, Ltd. for more information.

Note 4. When using these resonators, contact KYOCERA Crystal Device Corporation (http://www.kyoceracrystal.jp, http://www.kyocera.co.jp) for more information on matching.

Remark 1. Relationship between operation voltage width, operation frequency of CPU and operation mode is as below.
HS (High-speed main) mode:2.7 V ≤ V_{DD} ≤ 5.5 V@1 MHz to 32 MHz
2.4 V ≤ V_{DD} ≤ 5.5 V@1 MHz to 16 MHz
LS (Low-speed main) mode:1.8 V ≤ V_{DD} ≤ 5.5 V@1 MHz to 8 MHz
LV (Low-voltage main) mode:1.6 V ≤ V_{DD} ≤ 5.5 V@1 MHz to 4 MHz

Remark 2. A list of the resonators for which the operation has most recently been verified and their oscillation constants (for reference) is provided on the page for the corresponding product at the Renesas Web site (http://www.renesas.com).

CHAPTER 6 TIMER ARRAY UNIT

Timer array unit has one unit with four channels.

Caution 1. The presence or absence of timer I/O pins depends on the product. See Table 6 - 2 Timer I/O Pins provided in Each Product for details.

Caution 2. Most of the following descriptions in this chapter use the 64-pin products as an example.

The timer array unit has four 16-bit timers.
Each 16-bit timer is called a channel and can be used as an independent timer. In addition, two or more “channels” can be used to create a high-accuracy timer.

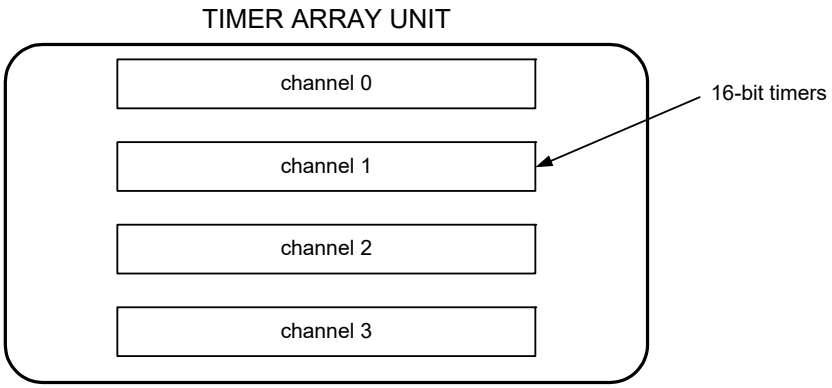

For details about each function, see the table below.

Independent channel operation function	Simultaneous channel operation function
• Interval timer (→ refer to **6.8.1**) • Square wave output (→ refer to **6.8.1**) • External event counter (→ refer to **6.8.2**) • Divider[Note] (→ refer to **6.8.3**) • Input pulse interval measurement (→ refer to **6.8.4**) • Measurement of high-/low-level width of input signal (→ refer to **6.8.5**) • Delay counter (→ refer to **6.8.6**)	• One-shot pulse output (→ refer to **6.9.1**) • PWM output (→ refer to **6.9.2**) • Multiple PWM output (→ refer to **6.9.3**)

Note Only channel 0 of unit 0.

It is possible to use the 16-bit timer of channels 1 and 3 of the unit 0 as two 8-bit timers (higher and lower). The functions that can use channels 1 and 3 as 8-bit timers are as follows:

• Interval timer (upper or lower 8-bit timer)/square wave output (lower 8-bit timer only)
• External event counter (lower 8-bit timer only)
• Delay counter (lower 8-bit timer only)

Channel 3 of unit 0 can be used to realize LIN-bus communication operating in combination with UART0 of the serial array unit.

6.1 Functions of Timer Array Unit

Timer array unit has the following functions.

6.1.1 Independent channel operation function

By operating a channel independently, it can be used for the following purposes without being affected by the operation mode of other channels.

(1) Interval timer

Each timer of a unit can be used as a reference timer that generates an interrupt (INTTMmn) at fixed intervals.

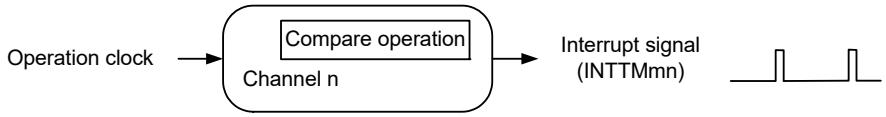

(2) Square wave output

A toggle operation is performed each time INTTMmn interrupt is generated and a square wave with a duty factor of 50% is output from a timer output pin (TOmn).

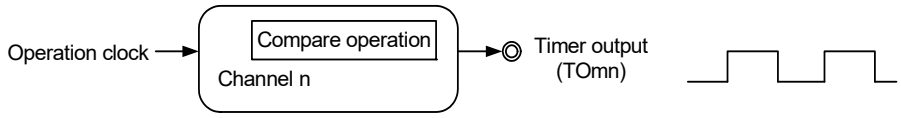

(3) External event counter

Each timer of a unit can be used as an event counter that generates an interrupt when the number of the valid edges of a signal input to the timer input pin (TImn) has reached a specific value.

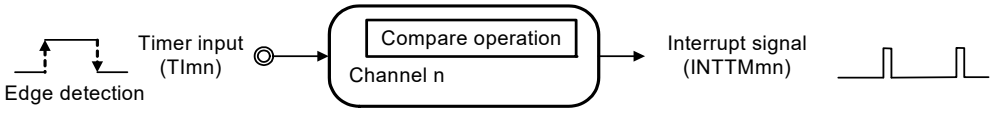

(4) Divider function (channel 0 only)

A clock input from a timer input pin (TI00) is divided and output from an output pin (TOm0).

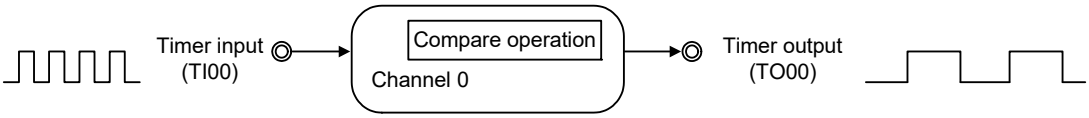

(5) Input pulse interval measurement

Counting is started by the valid edge of a pulse signal input to a timer input pin (TImn). The count value of the timer is captured at the valid edge of the next pulse. In this way, the interval of the input pulse can be measured.

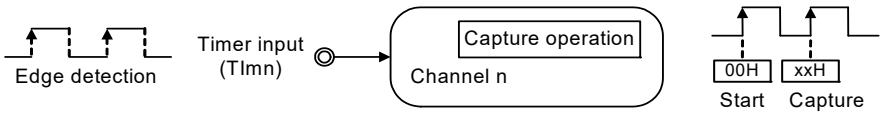

(6) Measurement of high-/low-level width of input signal

Counting is started by a single edge of the signal input to the timer input pin (TImn), and the count value is captured at the other edge. In this way, the high-level or low-level width of the input signal can be measured.

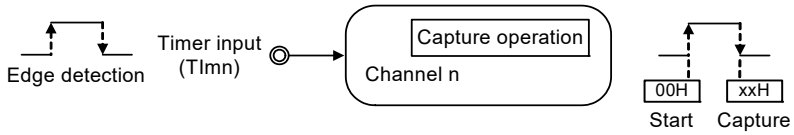

(7) Delay counter

Counting is started at the valid edge of the signal input to the timer input pin (TImn), and an interrupt is generated after any delay period.

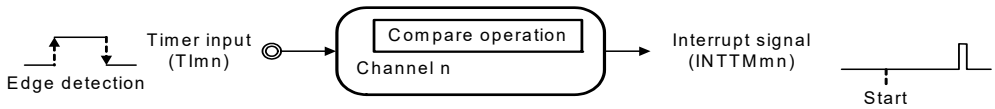

Remark 1. m: Unit number (m = 0), n: Channel number (n = 0 to 3)

Remark 2. The presence or absence of timer I/O pins of channel 0 to 3 depends on the product. See **Table 6 - 2 Timer I/O Pins provided in Each Product** for details.

6.1.2 Simultaneous channel operation function

By using the combination of a master channel (a reference timer mainly controlling the cycle) and slave channels (timers operating according to the master channel), channels can be used for the following purposes.

(1) One-shot pulse output

Two channels are used as a set to generate a one-shot pulse with a specified output timing and a specified pulse width.

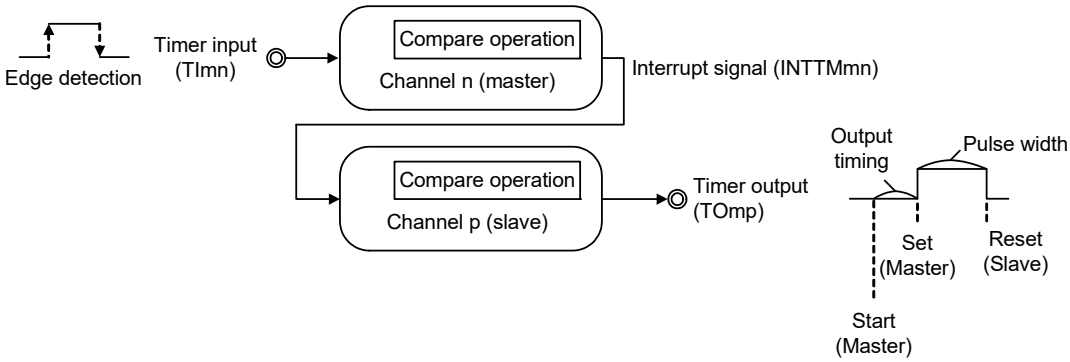

(2) PWM (Pulse Width Modulation) output

Two channels are used as a set to generate a pulse with a specified period and a specified duty factor.

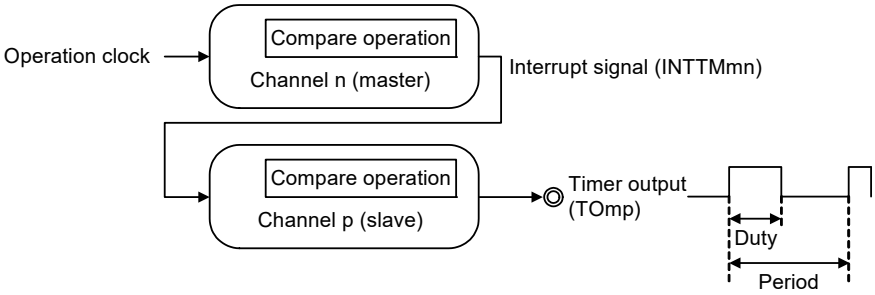

(3) Multiple PWM (Pulse Width Modulation) output

By extending the PWM function and using one master channel and two or more slave channels, up to three types of PWM signals that have a specific period and a specified duty factor can be generated.

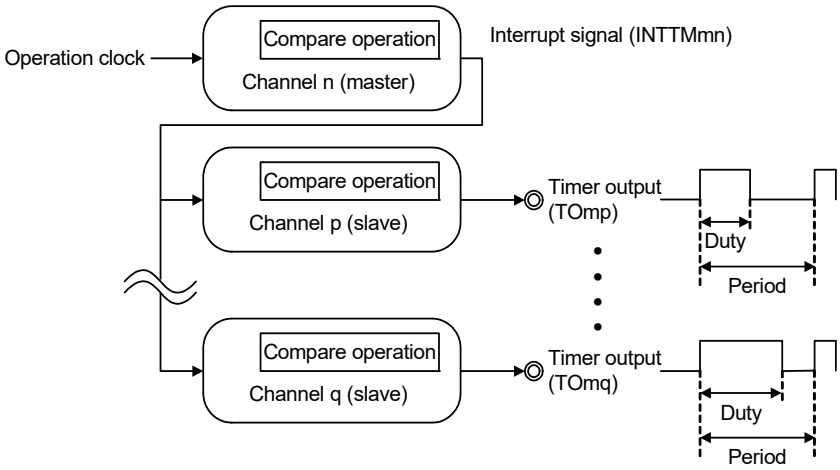

Caution **For details about the rules of simultaneous channel operation function, see 6.4.1 Basic rules of simultaneous channel operation function.**

Remark m: Unit number (m = 0), n: Channel number (n = 0 to 3),
p, q: Slave channel number (n < p < q ≤ 3)

6.1.3 8-bit timer operation function (channels 1 and 3 only)

The 8-bit timer operation function makes it possible to use a 16-bit timer channel in a configuration consisting of two 8-bit timer channels. This function can only be used for channels 1 and 3.

Caution **There are several rules for using 8-bit timer operation function.**
For details, see 6.4.2 Basic rules of 8-bit timer operation function (channels 1 and 3 only).

6.1.4 LIN-bus supporting function (channel 3 of unit 0 only)

Timer array unit is used to check whether signals received in LIN-bus communication match the LIN-bus communication format.

(1) Detection of wakeup signal
The timer starts counting at the falling edge of a signal input to the serial data input pin (RxD0) of UART0 and the count value of the timer is captured at the rising edge. In this way, a low-level width can be measured. If the low-level width is greater than a specific value, it is recognized as a wakeup signal.

(2) Detection of break field
The timer starts counting at the falling edge of a signal input to the serial data input pin (RxD0) of UART0 after a wakeup signal is detected, and the count value of the timer is captured at the rising edge. In this way, a low-level width is measured. If the low-level width is greater than a specific value, it is recognized as a break field.

(3) Measurement of pulse width of sync field
After a break field is detected, the low-level width and high-level width of the signal input to the serial data input pin (RxD0) of UART0 are measured. From the bit interval of the sync field measured in this way, a baud rate is calculated.

Remark For details about setting up the operations used to implement the LIN-bus, see **6.3.13 Input switch control register (ISC)** and **6.8.5 Operation as input signal high-/low-level width measurement**.

6.2 Configuration of Timer Array Unit

Timer array unit includes the following hardware.

Table 6 - 1 Configuration of Timer Array Unit

Item	Configuration
Timer/counter	Timer count register mn (TCRmn)
Register	Timer data register mn (TDRmn)
Timer input	TI00 to TI03[Note 1], RxD0 pin (for LIN-bus)
Timer output	TO00 to TO03[Note 1], output controller
Control registers	<Registers of unit setting block> • Peripheral enable register 0 (PER0) • Timer clock select register m (TPSm) • Timer channel enable status register m (TEm) • Timer channel start register m (TSm) • Timer channel stop register m (TTm) • Timer I/O select register 0 (TIOS0) • Timer output enable register m (TOEm) • Timer output register m (TOm) • Timer output level register m (TOLm) • Timer output mode register m (TOMm)
	<Registers of each channel> • Timer mode register mn (TMRmn) • Timer status register mn (TSRmn) • Input switch control register (ISC) • Noise filter enable register 1 (NFEN1) • Port mode control register (PMCxx)[Note 2] • Port mode register (PMxx)[Note 2] • Port register (Pxx)[Note 2]

Note 1. The presence or absence of timer I/O pins of channel 0 to 3 depends on the product. See **Table 6 - 2 Timer I/O Pins provided in Each Product** for details.

Note 2. The port mode control registers (PMCxx), port mode registers (PMxx) and port registers (Pxx) to be set differ depending on the product. For details, see **4.5 Register Settings When Using Alternate Function**.

Remark m: Unit number (m = 0), n: Channel number (n = 0 to 3)

The presence or absence of timer I/O pins in each timer array unit channel depends on the product.

Table 6 - 2 Timer I/O Pins provided in Each Product

Timer array unit channels		I/O Pins of Each Product	
		32, 36, 48, 64-pin	24-pin
Unit 0	Channel 0	TI00, TO00	TI00, TO00
	Channel 1	TI01/TO01	—
	Channel 2	TI02/TO02	—
	Channel 3	TI03/TO03	TI03/TO03

Remark When timer input and timer output are shared by the same pin, either only timer input or only timer output can be used.

Figures 6 - 1 to 6 - 5 show the block diagrams of the timer array unit.

Figure 6 - 1 Entire Configuration of Timer Array Unit 0

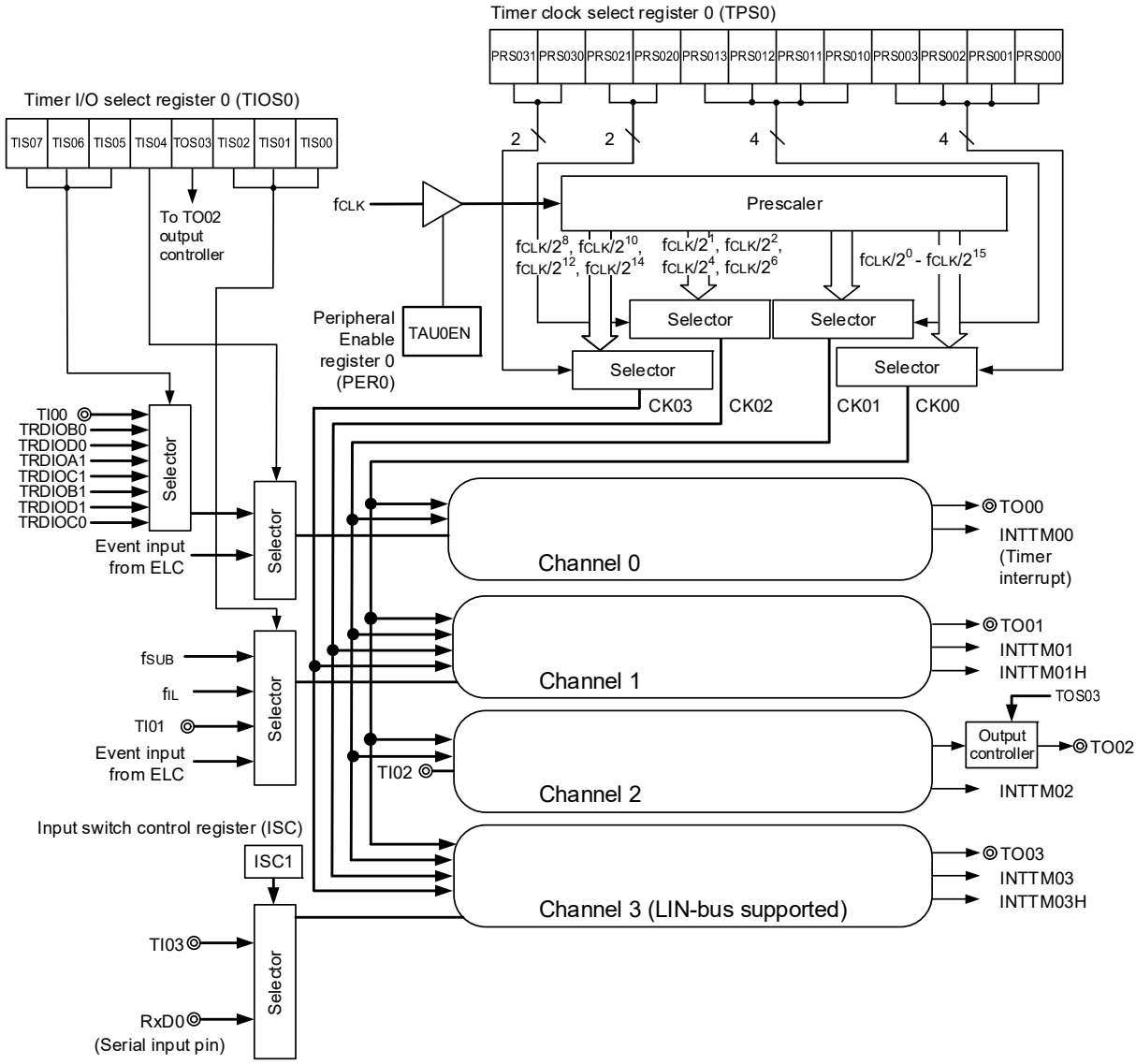

Remark f_{SUB}: Subsystem clock frequency

f_{IL}: Low-speed on-chip oscillator clock frequency

Figure 6 - 2 Internal Block Diagram of Channel 0 of Timer Array Unit 0

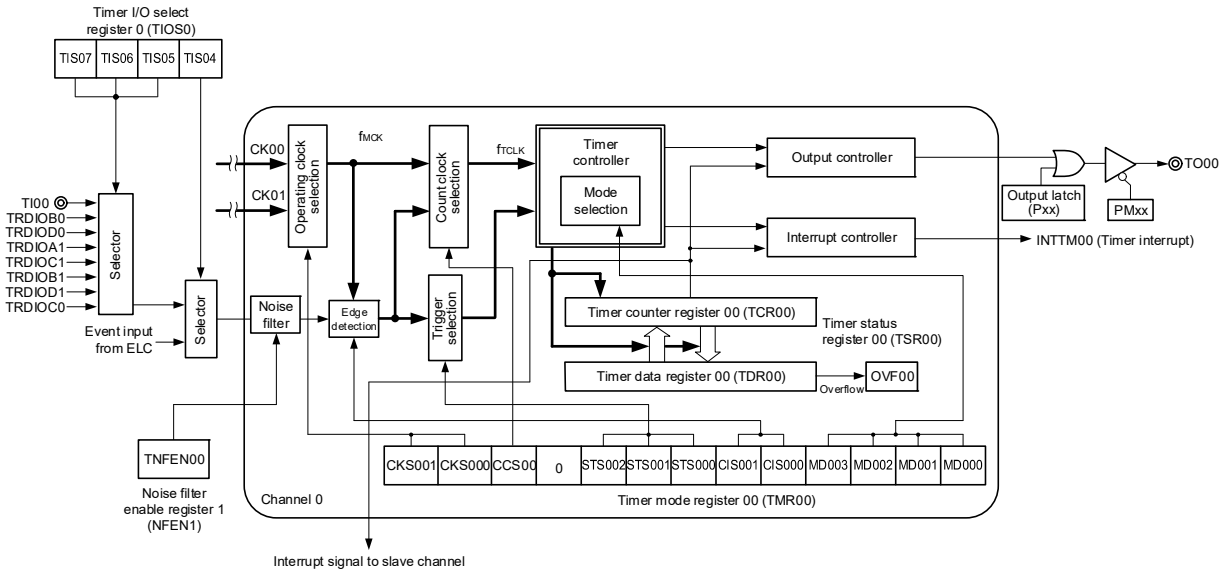

Figure 6 - 3 Internal Block Diagram of Channel 1 of Timer Array Unit 0

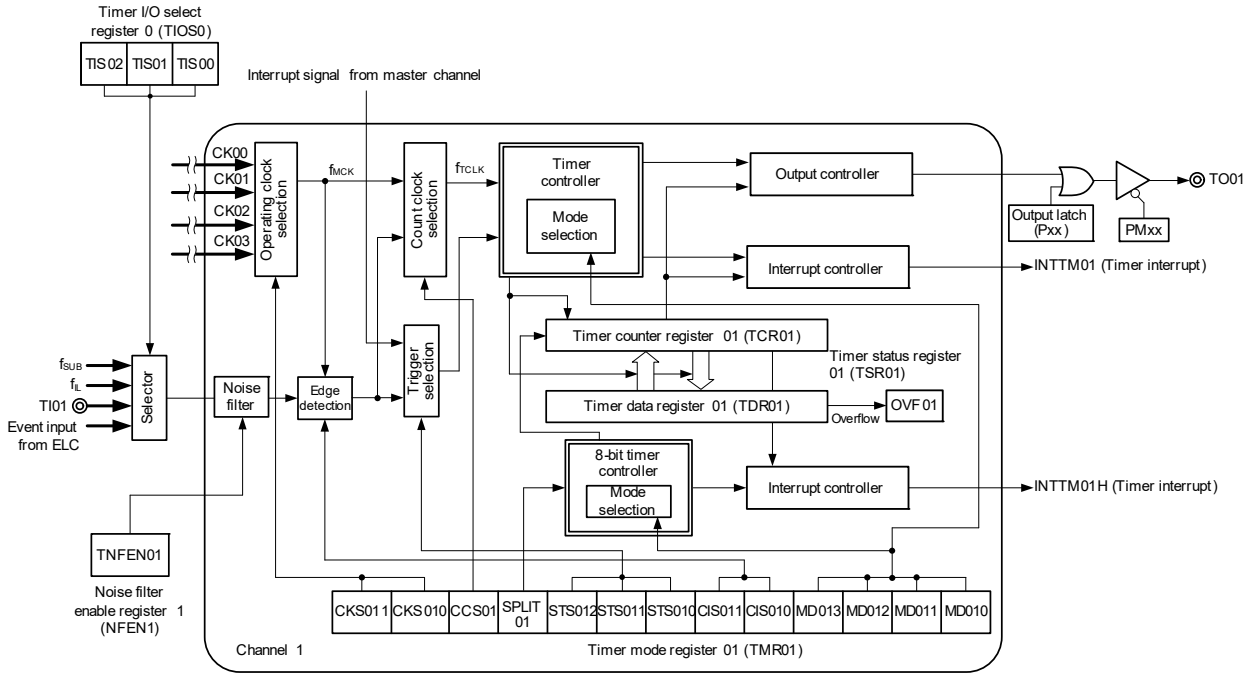

Figure 6 - 4 Internal Block Diagram of Channel 2 of Timer Array Unit 0

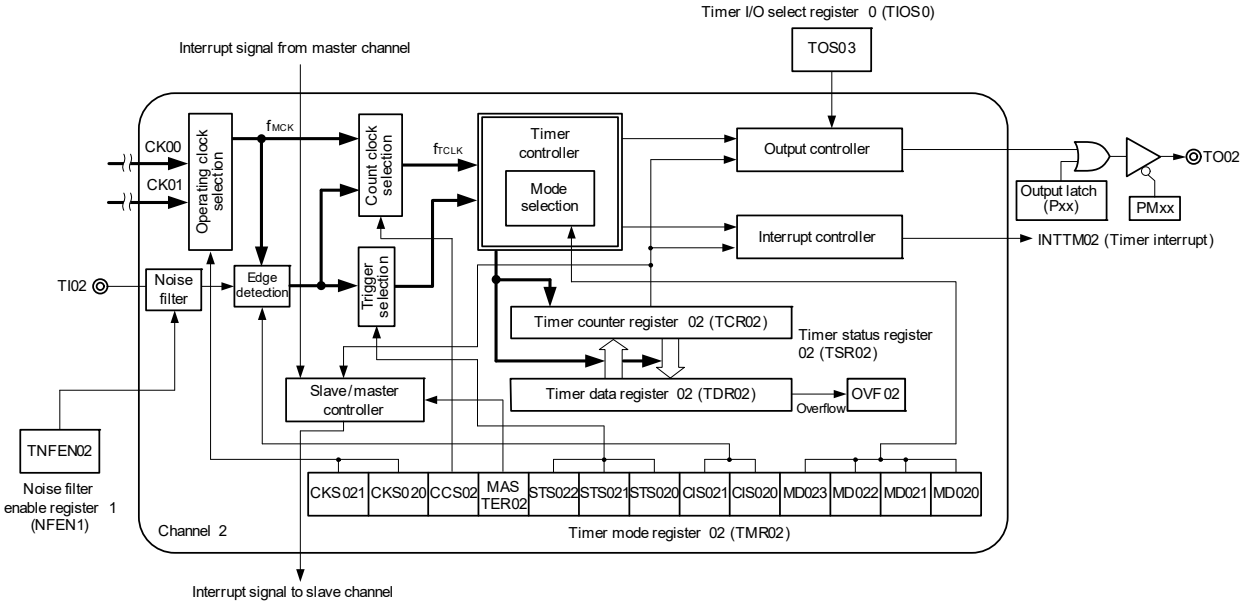

Figure 6 - 5 Internal Block Diagram of Channel 3 of Timer Array Unit 0

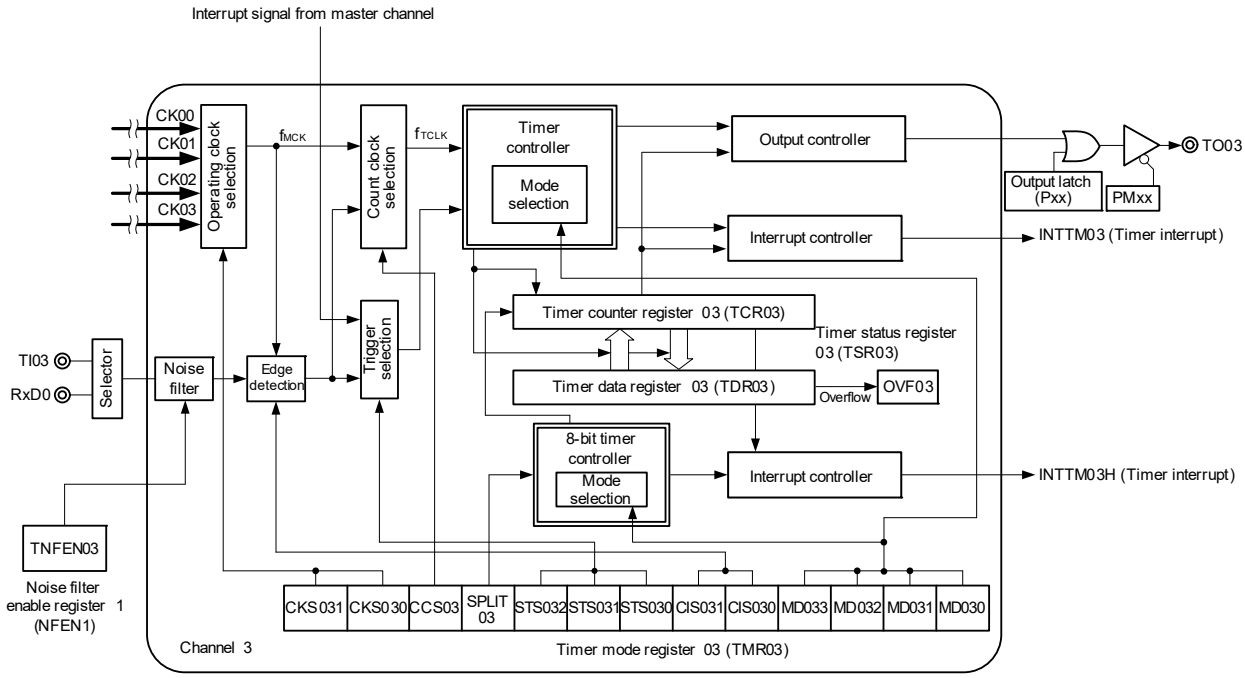

6.2.1 Timer count register mn (TCRmn)

The TCRmn register is a 16-bit read-only register and is used to count clocks.

The value of this counter is incremented or decremented in synchronization with the rising edge of a count clock. Whether the counter is incremented or decremented depends on the operation mode that is selected by the MDmn3 to MDmn0 bits of timer mode register mn (TMRmn) (refer to **6.3.3 Timer mode register mn (TMRmn)**).

Figure 6 - 6 Format of Timer count register mn (TCRmn)

Address: F0180H, F0181H (TCR00) to F0186H, F0187H (TCR03) After reset: FFFFH R

	F0181H (TCR00)								F0180H (TCR00)							
	15	14	13	12	11	10	9	8	7	6	5	4	3	2	1	0
TCRmn																

Remark m: Unit number (m = 0), n: Channel number (n = 0 to 3)

The count value can be read by reading timer count register mn (TCRmn).

The count value is set to FFFFH in the following cases.

- When the reset signal is generated
- When the TAUmEN bit of peripheral enable register 0 (PER0) is cleared
- When counting of the slave channel has been completed in the PWM output mode
- When counting of the slave channel has been completed in the delay count mode
- When counting of the master/slave channel has been completed in the one-shot pulse output mode
- When counting of the slave channel has been completed in the multiple PWM output mode

The count value is cleared to 0000H in the following cases.

- When the start trigger is input in the capture mode
- When capturing has been completed in the capture mode

Caution The count value is not captured to timer data register mn (TDRmn) even when the TCRmn register is read.

The TCRmn register read value differs as follows according to operation mode changes and the operating status.

Table 6 - 3 Timer Count Register mn (TCRmn) Read Value in Various Operation Modes

Operation Mode	Count Mode	Timer count register mn (TCRmn) Read Value Note			
		Value if the operation mode was changed after releasing reset	Value if the Operation was restarted after count operation paused (TTmn = 1)	Value if the operation mode was changed after count operation paused (TTmn = 1)	Value when waiting for a start trigger after one count
Interval timer mode	Count down	FFFFH	Value if stop	Undefined	—
Capture mode	Count up	0000H	Value if stop	Undefined	—
Event counter mode	Count down	FFFFH	Value if stop	Undefined	—
One-count mode	Count down	FFFFH	Value if stop	Undefined	FFFFH
Capture & one-count mode	Count up	0000H	Value if stop	Undefined	Capture value of TDRmn register + 1

Note This indicates the value read from the TCRmn register when channel n has stopped operating as a timer (TEmn = 0) and has been enabled to operate as a counter (TSmn = 1). The read value is held in the TCRmn register until the count operation starts.

Remark m: Unit number (m = 0), n: Channel number (n = 0 to 3)

6.2.2 Timer data register mn (TDRmn)

This is a 16-bit register from which a capture function and a compare function can be selected.

The capture or compare function can be switched by selecting an operation mode by using the MDmn3 to MDmn0 bits of timer mode register mn (TMRmn).

The value of the TDRmn register can be changed at any time.

This register can be read or written in 16-bit units.

In addition, for the TDRm1 and TDRm3 registers, while in the 8-bit timer mode (when the SPLIT bits of timer mode registers m1 and m3 (TMRm1, TMRm3) are 1), it is possible to read and write the data in 8-bit units, with TDRm1H and TDRm3H used as the higher 8 bits, and TDRm1L and TDRm3L used as the lower 8 bits.

Reset signal generation clears this register to 0000H.

Figure 6 - 7 Format of Timer data register mn (TDRmn) (n = 0, 2)

Address: FFF18H, FFF19H (TDR00), FFF64H, FFF65H (TDR02) After reset: 0000H R/W

	FFF19H (TDR00)								FFF18H (TDR00)							
	15	14	13	12	11	10	9	8	7	6	5	4	3	2	1	0
TDRmn																

Figure 6 - 8 Format of Timer data register mn (TDRmn) (n = 1, 3)

Address: FFF1AH, FFF1BH (TDR01), FFF66H, FFF67H (TDR03) After reset: 00H R/W

	FFF1BH (TDR01H)								FFF1AH (TDR01L)							
	15	14	13	12	11	10	9	8	7	6	5	4	3	2	1	0
TDRmn																

(i) When timer data register mn (TDRmn) is used as compare register

Counting down is started from the value set to the TDRmn register. When the count value reaches 0000H, an interrupt signal (INTTMmn) is generated. The TDRmn register holds its value until it is rewritten.

Caution The TDRmn register does not perform a capture operation even if a capture trigger is input, when it is set to the compare function.

(ii) When timer data register mn (TDRmn) is used as capture register

The count value of timer count register mn (TCRmn) is captured to the TDRmn register when the capture trigger is input.

A valid edge of the TImn pin can be selected as the capture trigger. This selection is made by timer mode register mn (TMRmn).

Remark m: Unit number (m = 0), n: Channel number (n = 0 to 3)

6.3 Registers Controlling Timer Array Unit

Timer array unit is controlled by the following registers.

- Peripheral enable register 0 (PER0)
- Timer clock select register m (TPSm)
- Timer mode register mn (TMRmn)
- Timer status register mn (TSRmn)
- Timer channel enable status register m (TEm)
- Timer channel start register m (TSm)
- Timer channel stop register m (TTm)
- Timer I/O select register 0 (TIOS0)
- Timer output enable register m (TOEm)
- Timer output register m (TOm)
- Timer output level register m (TOLm)
- Timer output mode register m (TOMm)
- Input switch control register (ISC)
- Noise filter enable register 1 (NEFN1)
- Port mode control register (PMCxx)
- Port mode register (PMxx)
- Port register (Pxx)

Caution **Which registers and bits are included depends on the product. Be sure to set bits that are not mounted to their initial values.**

Remark m: Unit number (m = 0), n: Channel number (n = 0 to 3)

6.3.1 Peripheral enable register 0 (PER0)

This registers is used to enable or disable supplying the clock to the peripheral hardware. Clock supply to a hardware macro that is not used is stopped in order to reduce the power consumption and noise.

When the timer array unit 0 is used, be sure to set bit 0 (TAU0EN) of this register to 1.

The PER0 register can be set by a 1-bit or 8-bit memory manipulation instruction.

Reset signal generation clears this register to 00H.

Figure 6 - 9 Format of Peripheral enable register 0 (PER0)

Address: F00F0H After reset: 00H R/W

Symbol	7	6	5	4	3	2	1	0
PER0	RTCEN	IRDAEN	ADCEN	IICA0EN	SAU1EN	SAU0EN	0	TAU0EN

TAU0EN	Control of timer array unit 0 input clock
0	Stops supply of input clock. • SFR used by the timer array unit 0 cannot be written. • The timer array unit 0 is in the reset status.
1	Supplies input clock. • SFR used by the timer array unit 0 can be read/written.

Caution When setting the timer array unit, be sure to set the following registers first while the TAUmEN bit is set to 1. If TAUmEN = 0, the values of the registers which control the timer array unit are cleared to their initial values and writing to them is ignored (except for timer I/O select register 0 (TIOS0), input switch control register (ISC), noise filter enable register 1 (NFEN1), port mode control registers 0, 1, 2, 12, 14 (PMC0, PMC1, PMC2, PMC12, PMC14), port mode registers 0, 1, 3, 6 (PM0, PM1, PM3, PM6), and port registers 0, 1, 3, 6 (P0, P1, P3, P6)).

- **Timer status register mn (TSRmn)**
- **Timer channel enable status register m (TEm)**
- **Timer channel start register m (TSm)**
- **Timer channel stop register m (TTm)**
- **Timer output enable register m (TOEm)**
- **Timer output register m (TOm)**
- **Timer output level register m (TOLm)**
- **Timer output mode register m (TOMm)**

6.3.2 Timer clock select register m (TPSm)

The TPSm register is a 16-bit register that is used to select two types or four types of operation clocks (CKm0, CKm1, CKm2, CKm3) that are commonly supplied to each channel. CKm0 is selected by using bits 3 to 0 of the TPSm register, and CKm1 is selected by using bits 7 to 4 of the TPSm register. In addition, only for channels 1 and 3, CKm2 and CKm3 can be also selected. CKm2 is selected by using bits 9 and 8 of the TPSm register, and CKm3 is selected by using bits 13 and 12 of the TPSm register.
Rewriting of the TPSm register during timer operation is possible only in the following cases.

If the PRSm00 to PRSm03 bits can be rewritten (n = 0 to 3):
All channels for which CKm0 is selected as the operation clock (CKSmn1, CKSmn0 = 0, 0) are stopped (TEmn = 0).
If the PRSm10 to PRSm13 bits can be rewritten (n = 0 to 3):
All channels for which CKm2 is selected as the operation clock (CKSmn1, CKSmn0 = 0, 1) are stopped (TEmn = 0).
If the PRSm20 and PRSm21 bits can be rewritten (n = 1, 3):
All channels for which CKm1 is selected as the operation clock (CKSmn1, CKSmn0 = 1, 0) are stopped (TEmn = 0).
If the PRSm30 and PRSm31 bits can be rewritten (n = 1, 3):
All channels for which CKm3 is selected as the operation clock (CKSmn1, CKSmn0 = 1, 1) are stopped (TEmn = 0).

The TPSm register can be set by a 16-bit memory manipulation instruction.
Reset signal generation clears this register to 0000H.

Figure 6 - 10 Format of Timer clock select register m (TPSm) (1/2)

Address: F01B6H, F01B7H (TPS0) After reset: 0000H R/W

Symbol	15	14	13	12	11	10	9	8	7	6	5	4	3	2	1	0
TPSm	0	0	PRSm 31	PRSm 30	0	0	PRSm 21	PRSm 20	PRSm 13	PRSm 12	PRSm 11	PRSm 10	PRSm 03	PRSm 02	PRSm 01	PRSm 00

PRS mk3	PRS mk2	PRS mk1	PRS mk0	Selection of operation clock (CKmk) Note (k = 0, 1)					
					f_{CLK} = 2 MHz	f_{CLK} = 4 MHz	f_{CLK} = 8 MHz	f_{CLK} = 20 MHz	f_{CLK} = 32 MHz
0	0	0	0	f_{CLK}	2 MHz	4 MHz	8 MHz	20 MHz	32 MHz
0	0	0	1	$f_{CLK}/2$	1 MHz	2 MHz	4 MHz	10 MHz	16 MHz
0	0	1	0	$f_{CLK}/2^2$	500 kHz	1 MHz	2 MHz	5 MHz	8 MHz
0	0	1	1	$f_{CLK}/2^3$	250 kHz	500 kHz	1 MHz	2.5 MHz	4 MHz
0	1	0	0	$f_{CLK}/2^4$	125 kHz	250 kHz	500 kHz	1.25 MHz	2 MHz
0	1	0	1	$f_{CLK}/2^5$	62.5 kHz	125 kHz	250 kHz	625 kHz	1 MHz
0	1	1	0	$f_{CLK}/2^6$	31.3 kHz	62.5 kHz	125 kHz	313 kHz	500 kHz
0	1	1	1	$f_{CLK}/2^7$	15.6 kHz	31.3 kHz	62.5 kHz	156 kHz	250 kHz
1	0	0	0	$f_{CLK}/2^8$	7.81 kHz	15.6 kHz	31.3 kHz	78.1 kHz	125 kHz
1	0	0	1	$f_{CLK}/2^9$	3.91 kHz	7.81 kHz	15.6 kHz	39.1 kHz	62.5 kHz
1	0	1	0	$f_{CLK}/2^{10}$	1.95 kHz	3.91 kHz	7.81 kHz	19.5 kHz	31.25 kHz
1	0	1	1	$f_{CLK}/2^{11}$	977 Hz	1.95 kHz	3.91 kHz	9.77 kHz	15.6 kHz
1	1	0	0	$f_{CLK}/2^{12}$	488 Hz	977 Hz	1.95 kHz	4.88 kHz	7.81 kHz
1	1	0	1	$f_{CLK}/2^{13}$	244 Hz	488 Hz	977 Hz	2.44 kHz	3.91 kHz
1	1	1	0	$f_{CLK}/2^{14}$	122 Hz	244 Hz	488 Hz	1.22 kHz	1.95 kHz
1	1	1	1	$f_{CLK}/2^{15}$	61.0 Hz	122 Hz	244 Hz	610 Hz	977 Hz

Note When changing the clock selected for f_{CLK} (by changing the system clock control register (CKC) value), stop timer array unit (TTm = 000FH).
The timer array unit must also be stopped if the operating clock (f_{MCK}) or the valid edge of the signal input from the TImn pin is selected.

Caution 1. Be sure to clear bits 15, 14, 11, 10 to "0".

Caution 2. If f_{CLK} (undivided) is selected as the operation clock (CKmk) and TDRnm is set to 0000H (n = 0 or 1, m = 0 to 3), interrupt requests output from timer array units cannot be used.

Remark 1. f_{CLK}: CPU/peripheral hardware clock frequency

Remark 2. Waveform of the clock to be selected in the TPSm register which becomes high level for one period of f_{CLK} from its rising edge (m = 1 to 15). For details, see **6.5.1 Count clock (f_{TCLK})**.

Figure 6 - 11 Format of Timer clock select register m (TPSm) (2/2)

Address: F01B6H, F01B7H (TPS0) After reset: 0000H R/W

Symbol	15	14	13	12	11	10	9	8	7	6	5	4	3	2	1	0
TPSm	0	0	PRSm 31	PRSm 30	0	0	PRSm 21	PRSm 20	PRSm 13	PRSm 12	PRSm 11	PRSm 10	PRSm 03	PRSm 02	PRSm 01	PRSm 00

PRS m21	PRS m20	Selection of operation clock (CKm2) Note					
			f_{CLK} = 2 MHz	f_{CLK} = 4 MHz	f_{CLK} = 8 MHz	f_{CLK} = 20 MHz	f_{CLK} = 32 MHz
0	0	$f_{CLK}/2$	1 MHz	2 MHz	4 MHz	10 MHz	16 MHz
0	1	$f_{CLK}/2^2$	500 kHz	1 MHz	2 MHz	5 MHz	8 MHz
1	0	$f_{CLK}/2^4$	125 kHz	250 kHz	500 kHz	1.25 MHz	2 MHz
1	1	$f_{CLK}/2^6$	31.3 kHz	62.5 kHz	125 kHz	313 kHz	500 kHz

PRS m31	PRS m30	Selection of operation clock (CKm3) Note					
			f_{CLK} = 2 MHz	f_{CLK} = 4 MHz	f_{CLK} = 8 MHz	f_{CLK} = 20 MHz	f_{CLK} = 32 MHz
0	0	$f_{CLK}/2^8$	7.81 kHz	15.6 kHz	31.3 kHz	78.1 kHz	125 kHz
0	1	$f_{CLK}/2^{10}$	1.95 kHz	3.91 kHz	7.81 kHz	19.5 kHz	31.3 kHz
1	0	$f_{CLK}/2^{12}$	488 Hz	977 Hz	1.95 kHz	4.88 kHz	7.81 kHz
1	1	$f_{CLK}/2^{14}$	122 Hz	244 Hz	488 Hz	1.22 kHz	1.95 kHz

Note When changing the clock selected for f_{CLK} (by changing the system clock control register (CKC) value), stop timer array unit (TTm = 000FH).
The timer array unit must also be stopped if the operating clock (f_{MCK}) or the valid edge of the signal input from the TImn pin is selected.

Caution **Be sure to clear bits 15, 14, 11, 10 to "0".**

By using channels 1 and 3 in the 8-bit timer mode and specifying CKm2 or CKm3 as the operation clock, the interval times shown in Table 6 - 4 can be achieved by using the interval timer function.

Table 6 - 4 Interval Times Available for Operation Clock CKSm2 or CKSm3

Clock		Interval time Note (f_{CLK} = 32 MHz)			
		10 μs	100 μs	1 ms	10 ms
CKm2	$f_{CLK}/2$	√	—	—	—
	$f_{CLK}/2^2$	√	—	—	—
	$f_{CLK}/2^4$	√	√	—	—
	$f_{CLK}/2^6$	√	√	—	—
CKm3	$f_{CLK}/2^8$	—	√	√	—
	$f_{CLK}/2^{10}$	—	√	√	—
	$f_{CLK}/2^{12}$	—	—	√	√
	$f_{CLK}/2^{14}$	—	—	√	√

Note The margin is within 5%.

Remark 1. f_{CLK}: CPU/peripheral hardware clock frequency

Remark 2. For details of a signal of $f_{CLK}/2^r$ selected with the TPSm register, see **6.5.1 Count clock (f_{TCLK})**.

6.3.3 Timer mode register mn (TMRmn)

The TMRmn register sets an operation mode of channel n. This register is used to select the operation clock (f_{MCK}), select the count clock, select the master/slave, select the 16 or 8-bit timer (only for channels 1 and 3), specify the start trigger and capture trigger, select the valid edge of the timer input, and specify the operation mode (interval, capture, event counter, one-count, or capture and one-count).

Rewriting the TMRmn register is prohibited when the register is in operation (when TEmn = 1). However, bits 7 and 6 (CISmn1, CISmn0) can be rewritten even while the register is operating with some functions (when TEmn = 1) (for details, see **6.8 Independent Channel Operation Function of Timer Array Unit** and **6.9 Simultaneous Channel Operation Function of Timer Array Unit**.

The TMRmn register can be set by a 16-bit memory manipulation instruction.

Reset signal generation clears this register to 0000H.

Caution The bits mounted depend on the channels in the bit 11 of TMRmn register.
TMRm2: MASTERmn bit (n = 2)
TMRm1, TMRm3: SPLITmn bit (n = 1, 3)
TMRm0: Fixed to 0

Figure 6 - 12 Format of Timer mode register mn (TMRmn) (1/4)

Address: F0190H, F0191H (TMR00) to F0196H, F0197H (TMR03) After reset: 0000H R/W

Symbol	15	14	13	12	11	10	9	8	7	6	5	4	3	2	1	0
TMRmn (n = 2)	CKSmn1	CKSmn0	0	CCSmn	MASTERmn	STSmn2	STSmn1	STSmn0	CISmn1	CISmn0	0	0	MDmn3	MDmn2	MDmn1	MDmn0

Symbol	15	14	13	12	11	10	9	8	7	6	5	4	3	2	1	0
TMRmn (n = 1, 3)	CKSmn1	CKSmn0	0	CCSmn	SPLITmn	STSmn2	STSmn1	STSmn0	CISmn1	CISmn0	0	0	MDmn3	MDmn2	MDmn1	MDmn0

Symbol	15	14	13	12	11	10	9	8	7	6	5	4	3	2	1	0
TMRmn (n = 0)	CKSmn1	CKSmn0	0	CCSmn	0 Note 1	STSmn2	STSmn1	STSmn0	CISmn1	CISmn0	0	0	MDmn3	MDmn2	MDmn1	MDmn0

CKSmn1	CKSmn0	Selection of operation clock (f_{MCK}) of channel n
0	0	Operation clock CKm0 set by timer clock select register m (TPSm)
0	1	Operation clock CKm2 set by timer clock select register m (TPSm)
1	0	Operation clock CKm1 set by timer clock select register m (TPSm)
1	1	Operation clock CKm3 set by timer clock select register m (TPSm)
Operation clock (f_{MCK}) is used by the edge detector. A count clock (f_{TCLK}) and a sampling clock are generated depending on the setting of the CCSmn bit. The operation clocks CKm2 and CKm3 can only be selected for channels 1 and 3.		

CCSmn	Selection of count clock (f_{TCLK}) of channel n
0	Operation clock (f_{MCK}) specified by the CKSmn0 and CKSmn1 bits
1	Valid edge of input signal input from the TImn pin When using unit 0: In channel 0, Valid edge of input signal selected by TIS0 In channel 1, Valid edge of input signal selected by TIS0 In channel 3, Valid edge of input signal selected by ISC
Count clock (f_{TCLK}) is used for the counter, output controller, and interrupt controller.	

Note 1. Bit 11 is fixed at 0 of read only, write is ignored.

Caution 1. Be sure to clear bits 13, 5, and 4 to "0".

Caution 2. The timer array unit must be stopped (TTm = 00FFH) if the clock selected for f_{CLK} is changed (by changing the value of the system clock control register (CKC)), even if the operating clock specified by using the CKSmn0 and CKSmn1 bits (f_{MCK}) or the valid edge of the signal input from the TImn pin is selected as the count clock (f_{TCLK}).

Remark m: Unit number (m = 0), n: Channel number (n = 0 to 3)

Figure 6 - 13 Format of Timer mode register mn (TMRmn) (2/4)

Address: F0190H, F0191H (TMR00) to F0196H, F0197H (TMR03) After reset: 0000H R/W

Symbol	15	14	13	12	11	10	9	8	7	6	5	4	3	2	1	0
TMRmn (n = 2)	CKSmn1	CKSmn0	0	CCSmn	MASTERmn	STSmn2	STSmn1	STSmn0	CISmn1	CISmn0	0	0	MDmn3	MDmn2	MDmn1	MDmn0

Symbol	15	14	13	12	11	10	9	8	7	6	5	4	3	2	1	0
TMRmn (n = 1, 3)	CKSmn1	CKSmn0	0	CCSmn	SPLITmn	STSmn2	STSmn1	STSmn0	CISmn1	CISmn0	0	0	MDmn3	MDmn2	MDmn1	MDmn0

Symbol	15	14	13	12	11	10	9	8	7	6	5	4	3	2	1	0
TMRmn (n = 0)	CKSmn1	CKSmn0	0	CCSmn	0 Note 1	STSmn2	STSmn1	STSmn0	CISmn1	CISmn0	0	0	MDmn3	MDmn2	MDmn1	MDmn0

(Bit 11 of TMRmn (n = 2))

MASTERmn	Selection between using channel n independently or simultaneously with another channel (as a slave or master)
0	Operates in independent channel operation function or as slave channel in simultaneous channel operation function.
1	Operates as master channel in simultaneous channel operation function.
Only the channel 2 can be set as a master channel (MASTERmn = 1). Be sure to use channel 0 is fixed to 0 (regardless of the bit setting, channel 0 operates as master, because it is the highest channel). Clear the MASTERmn bit to 0 for a channel that is used with the independent channel operation function.	

(Bit 11 of TMRmn (n = 1, 3))

SPLITmn	Selection of 8 or 16-bit timer operation for channels 1 and 3
0	Operates as 16-bit timer. (Operates in independent channel operation function or as slave channel in simultaneous channel operation function.)
1	Operates as 8-bit timer.

STSmn2	STSmn1	STSmn0	Setting of start trigger or capture trigger of channel n
0	0	0	Only software trigger start is valid (other trigger sources are unselected).
0	0	1	Valid edge of the TImn pin input is used as both the start trigger and capture trigger.
0	1	0	Both the edges of the TImn pin input are used as a start trigger and a capture trigger.
1	0	0	Interrupt signal of the master channel is used (when the channel is used as a slave channel with the simultaneous channel operation function).
Other than above			Setting prohibited

Note 1. Bit 11 is fixed at 0 of read only, write is ignored.

Remark m: Unit number (m = 0), n: Channel number (n = 0 to 3)

Figure 6 - 14 Format of Timer mode register mn (TMRmn) (3/4)

Address: F0190H, F0191H (TMR00) to F0196H, F0197H (TMR03) After reset: 0000H R/W

Symbol	15	14	13	12	11	10	9	8	7	6	5	4	3	2	1	0
TMRmn (n = 2)	CKSmn1	CKSmn0	0	CCSmn	MASTERmn	STSmn2	STSmn1	STSmn0	CISmn1	CISmn0	0	0	MDmn3	MDmn2	MDmn1	MDmn0

Symbol	15	14	13	12	11	10	9	8	7	6	5	4	3	2	1	0
TMRmn (n = 1, 3)	CKSmn1	CKSmn0	0	CCSmn	SPLITmn	STSmn2	STSmn1	STSmn0	CISmn1	CISmn0	0	0	MDmn3	MDmn2	MDmn1	MDmn0

Symbol	15	14	13	12	11	10	9	8	7	6	5	4	3	2	1	0
TMRmn (n = 0)	CKSmn1	CKSmn0	0	CCSmn	0 Note 1	STSmn2	STSmn1	STSmn0	CISmn1	CISmn0	0	0	MDmn3	MDmn2	MDmn1	MDmn0

CISmn1	CISmn0	Selection of TImn pin input valid edge[Note 2]
0	0	Falling edge
0	1	Rising edge
1	0	Both edges (when low-level width is measured) Start trigger: Falling edge, Capture trigger: Rising edge
1	1	Both edges (when high-level width is measured) Start trigger: Rising edge, Capture trigger: Falling edge
If both the edges are specified when the value of the STSmn2 to STSmn0 bits is other than 010B, set the CISmn1 to CISmn0 bits to 10B.		

Note 1. Bit 11 is fixed at 0 of read only, write is ignored.

Note 2. For timer array unit 0, the effective edge is that of the input signal selected in timer I/O select register 0 (TIOS0).

Remark m: Unit number (m = 0), n: Channel number (n = 0 to 3)

Figure 6 - 15 Format of Timer mode register mn (TMRmn) (4/4)

Address: F0190H, F0191H (TMR00) to F0196H, F0197H (TMR03) After reset: 0000H R/W

Symbol	15	14	13	12	11	10	9	8	7	6	5	4	3	2	1	0
TMRmn (n = 2)	CKSmn1	CKSmn0	0	CCSmn	MASTERmn	STSmn2	STSmn1	STSmn0	CISmn1	CISmn0	0	0	MDmn3	MDmn2	MDmn1	MDmn0

Symbol	15	14	13	12	11	10	9	8	7	6	5	4	3	2	1	0
TMRmn (n = 1, 3)	CKSmn1	CKSmn0	0	CCSmn	SPLITmn	STSmn2	STSmn1	STSmn0	CISmn1	CISmn0	0	0	MDmn3	MDmn2	MDmn1	MDmn0

Symbol	15	14	13	12	11	10	9	8	7	6	5	4	3	2	1	0
TMRmn (n = 0)	CKSmn1	CKSmn0	0	CCSmn	0 Note 1	STSmn2	STSmn1	STSmn0	CISmn1	CISmn0	0	0	MDmn3	MDmn2	MDmn1	MDmn0

MD mn3	MD mn2	MD mn1	Operation mode of channel n	Corresponding function	Count operation of TCR
0	0	0	Interval timer mode	Interval timer / Square wave output / Divider function / PWM output (master)	Counting down
0	1	0	Capture mode	Input pulse interval measurement	Counting up
0	1	1	Event counter mode	External event counter	Counting down
1	0	0	One-count mode	Delay counter / One-shot pulse output / PWM output (slave)	Counting down
1	1	0	Capture & one-count mode	Measurement of high-/low-level width of input signal	Counting up
Other than above			Setting prohibited		
The operation of each mode varies depending on MDmn0 bit (see table below).					

Operation mode (Value set by the MDmn3 to MDmn1 bits (see table above))	MDmn0	Setting of starting counting and interrupt
• Interval timer mode (0, 0, 0) • Capture mode (0, 1, 0)	0	Timer interrupt is not generated when counting is started (timer output does not change, either).
	1	Timer interrupt is generated when counting is started (timer output also changes).
• Event counter mode (0, 1, 1)	0	Timer interrupt is not generated when counting is started (timer output does not change, either).
• One-count mode Note 2 (1, 0, 0)	0	Start trigger is invalid during counting operation. At that time, interrupt is not generated.
	1	Start trigger is valid during counting operation Note 3. At that time, interrupt is not generated.
• Capture & one-count mode (1, 1, 0)	0	Timer interrupt is not generated when counting is started (timer output does not change, either). Start trigger is invalid during counting operation. At that time, interrupt is not generated.

Note 1. Bit 11 is fixed at 0 of read only, write is ignored.

Note 2. In one-count mode, interrupt output (INTTMmn) when starting a count operation and TOmn output are not controlled.

Note 3. If the start trigger (TSmn = 1) is issued during operation, the counter is initialized, and recounting is started (does not occur the interrupt request).

Remark m: Unit number (m = 0), n: Channel number (n = 0 to 3)

6.3.4 Timer status register mn (TSRmn)

The TSRmn register indicates the overflow status of the counter of channel n.

The TSRmn register is valid only in the capture mode (MDmn3 to MDmn1 = 010B) and capture & one-count mode (MDmn3 to MDmn1 = 110B). See **Table 6 - 5** for the operation of the OVF bit in each operation mode and set/clear conditions.

The TSRmn register can be read by a 16-bit memory manipulation instruction.

The lower 8 bits of the TSRmn register can be set with an 8-bit memory manipulation instruction with TSRmnL.

Reset signal generation clears this register to 0000H.

Figure 6 - 16 Format of Timer status register mn (TSRmn)

Address: F01A0H, F01A1H (TSR00) to F01A6H, F01A7H (TSR03) After reset: 0000H R

Symbol	15	14	13	12	11	10	9	8	7	6	5	4	3	2	1	0
TSRmn	0	0	0	0	0	0	0	0	0	0	0	0	0	0	0	OVF

OVF	Counter overflow status of channel n
0	Overflow does not occur.
1	Overflow occurs.
When OVF = 1, this flag is cleared (OVF = 0) when the next value is captured without overflow.	

Remark m: Unit number (m = 0), n: Channel number (n = 0 to 3)

Table 6 - 5 OVF Bit Operation and Set/Clear Conditions in Each Operation Mode

Timer operation mode	OVF bit	Set/clear conditions
• Capture mode • Capture & one-count mode	clear	When no overflow has occurred upon capturing
	set	When an overflow has occurred upon capturing
• Interval timer mode • Event counter mode • One-count mode	clear	— (Use prohibited)
	set	

Remark The OVF bit does not change immediately after the counter has overflowed, but changes upon the subsequent capture.

6.3.5 Timer channel enable status register m (TEm)

The TEm register is used to enable or stop the timer operation of each channel.

Each bit of the TEm register corresponds to each bit of the timer channel start register m (TSm) and the timer channel stop register m (TTm). When a bit of the TSm register is set to 1, the corresponding bit of this register is set to 1. When a bit of the TTm register is set to 1, the corresponding bit of this register is cleared to 0.

The TEm register can be read by a 16-bit memory manipulation instruction.

The lower 8 bits of the TEm register can be set with a 1-bit or 8-bit memory manipulation instruction with TEmL.

Reset signal generation clears this register to 0000H.

Figure 6 - 17 Format of Timer channel enable status register m (TEm)

Address: F01B0H, F01B1H (TE0) After reset: 0000H R

Symbol	15	14	13	12	11	10	9	8	7	6	5	4	3	2	1	0
TEm	0	0	0	0	TEHm3	0	TEHm1	0	0	0	0	0	TEm3	TEm2	TEm1	TEm0

TEHm3	Indication of whether operation of the higher 8-bit timer is enabled or stopped when channel 3 is in the 8-bit timer mode
0	Operation is stopped.
1	Operation is enabled.

TEHm1	Indication of whether operation of the higher 8-bit timer is enabled or stopped when channel 1 is in the 8-bit timer mode
0	Operation is stopped.
1	Operation is enabled.

TEmn	Indication of operation enable/stop status of channel n
0	Operation is stopped.
1	Operation is enabled.
This bit displays whether operation of the lower 8-bit timer for TEm1 and TEm3 is enabled or stopped when channel 1 or 3 is in the 8-bit timer mode.	

Remark m: Unit number (m = 0), n: Channel number (n = 0 to 3)

6.3.6 Timer channel start register m (TSm)

The TSm register is a trigger register that is used to initialize timer count register mn (TCRmn) and start the counting operation of each channel.

When a bit of this register is set to 1, the corresponding bit of timer channel enable status register m (TEm) is set to 1. The TSmn, TSHm1, TSHm3 bits are immediately cleared when operation is enabled (TEmn, TEHm1, TEHm3 = 1), because they are trigger bits.

The TSm register can be set by a 16-bit memory manipulation instruction.

The lower 8 bits of the TSm register can be set with a 1-bit or 8-bit memory manipulation instruction with TSmL.

Reset signal generation clears this register to 0000H.

Figure 6 - 18 Format of Timer channel start register m (TSm)

Address: F01B2H, F01B3H (TS0) After reset: 0000H R/W

Symbol	15	14	13	12	11	10	9	8	7	6	5	4	3	2	1	0
TSm	0	0	0	0	TSHm3	0	TSHm1	0	0	0	0	0	TSm3	TSm2	TSm1	TSm0

TSHm3	Trigger to enable operation (start operation) of the higher 8-bit timer when channel 3 is in the 8-bit timer mode
0	No trigger operation
1	The TEHm3 bit is set to 1 and the count operation becomes enabled. The TCRm3 register count operation start in the interval timer mode in the count operation enabled state (see **Table 6 - 6** in **6.5.2 Start timing of counter**).

TSHm1	Trigger to enable operation (start operation) of the higher 8-bit timer when channel 1 is in the 8-bit timer mode
0	No trigger operation
1	The TEHm1 bit is set to 1 and the count operation becomes enabled. The TCRm1 register count operation start in the interval timer mode in the count operation enabled state (see **Table 6 - 6** in **6.5.2 Start timing of counter**).

TSmn	Operation enable (start) trigger of channel n
0	No trigger operation
1	The TEmn bit is set to 1 and the count operation becomes enabled. The TCRmn register count operation start in the count operation enabled state varies depending on each operation mode (see **Table 6 - 6** in **6.5.2 Start timing of counter**). This bit is the trigger to enable operation (start operation) of the lower 8-bit timer for TSm1 and TSm3 when channel 1 or 3 is in the 8-bit timer mode.

(**Cautions** and **Remark** are listed on the next page.)

Caution 1. Be sure to clear bits 15 to 12, 10, 8 to 4 to "0"

Caution 2. When switching from a function that does not use TImn pin input to one that does, the following wait period is required from when timer mode register mn (TMRmn) is set until the TSmn (TSHm1, TSHm3) bit is set to 1.
When the TImn pin noise filter is enabled (TNFENmn = 1): Four cycles of the operation clock (f_{MCK})
When the TImn pin noise filter is disabled (TNFENmn = 0): Two cycles of the operation clock (f_{MCK})

Remark 1. When the TSm register is read, 0 is always read.

Remark 2. m: Unit number (m = 0), n: Channel number (n = 0 to 3)

6.3.7 Timer channel stop register m (TTm)

The TTm register is a trigger register that is used to stop the counting operation of each channel.

When a bit of this register is set to 1, the corresponding bit of timer channel enable status register m (TEm) is cleared to 0. The TTmn, TTHm1, TTHm3 bits are immediately cleared when operation is stopped (TEmn, TEHm1, TEHm3 = 0), because they are trigger bits.

The TTm register can be set by a 16-bit memory manipulation instruction.

The lower 8 bits of the TTm register can be set with a 1-bit or 8-bit memory manipulation instruction with TTmL.

Reset signal generation clears this register to 0000H.

Figure 6 - 19 Format of Timer channel stop register m (TTm)

Address: F01B4H, F01B5H (TT0) After reset: 0000H R/W

Symbol	15	14	13	12	11	10	9	8	7	6	5	4	3	2	1	0
TTm	0	0	0	0	TTHm3	0	TTHm1	0	0	0	0	0	TTm3	TTm2	TTm1	TTm0

TTHm3	Trigger to stop operation of the higher 8-bit timer when channel 3 is in the 8-bit timer mode
0	No trigger operation
1	TEHm3 bit is cleared to 0 and the count operation is stopped.

TTHm1	Trigger to stop operation of the higher 8-bit timer when channel 1 is in the 8-bit timer mode
0	No trigger operation
1	TEHm1 bit is cleared to 0 and the count operation is stopped.

<R>

<R>

TTmn	Operation stop trigger of channel n
0	No trigger operation
1	TEmn bit is cleared to 0 and the count operation is stopped. Operation is stopped (stop trigger is generated). This bit is the trigger to stop operation of the lower 8-bit timer for TTm1 and TTm3 when channel 1 or 3 is in the 8-bit timer mode.

Caution Be sure to clear bits 15 to 12, 10, 8 to 4 of the TTm register to "0".

Remark 1. When the TTm register is read, 0 is always read.

Remark 2. m: Unit number (m = 0), n: Channel number (n = 0 to 3)

6.3.8 Timer I/O select register 0 (TIOS0)

The TIOS0 register is used to select the timer input of channels 0 and 1 and timer output of channel 2 of unit 0.
The TIOS0 register can be set by an 8-bit memory manipulation instruction.
Reset signal generation clears this register to 00H.

Figure 6 - 20 Format of Timer I/O select register 0 (TIOS0)

Address: F0074H After reset: 00H R/W

Symbol	7	6	5	4	3	2	1	0
TIOS0	TIS07	TIS06	TIS05	TIS04	TOS03	TIS02	TIS01	TIS00

TIS07	TIS06	TIS05	Selection of timer input used with channel 0
0	0	0	Input signal of timer input pin (TI00)
0	0	1	Timer RD output signal that does not pass through PWMOPA (TRDIOB0)
0	1	0	Timer RD output signal that does not pass through PWMOPA (TRDIOD0)
0	1	1	Timer RD output signal that does not pass through PWMOPA (TRDIOA1)
1	0	0	Timer RD output signal that does not pass through PWMOPA (TRDIOC1)
1	0	1	Timer RD output signal that does not pass through PWMOPA (TRDIOB1)
1	1	0	Timer RD output signal that does not pass through PWMOPA (TRDIOD1)
1	1	1	Timer RD output signal that does not pass through PWMOPA (TRDIOC0)

TIS04	Selection of timer input used with channel 0
0	Input signal specified by the TIS07 to TIS05 bits
1	Event input signal from ELC

TOS03	Enable/disable of TAU channel 2 output to P17 pin
0	Output enabled
1	Output disabled (Fixed to L)

TIS02	TIS01	TIS00	Selection of timer input used with channel 1
0	0	0	Input signal of timer input pin (TI01)Note 1
0	0	1	Event input signal from ELC
0	1	0	Input signal of timer input pin (TI01)Note 1
0	1	1	
1	0	0	Low-speed on-chip oscillator clock (f_{IL})
1	0	1	Subsystem clock (f_{SUB})Note 2
Other than above			Setting prohibited

Note 1. Setting is prohibited for 24-pin products.
Note 2. Setting is prohibited for 24- and 32-pin products.

Caution 1. Be sure to clear bit 3 to "0" for 24-pin products.
Caution 2. At least 1/f_{MCK} + 10 ns is necessary as the high-level and low-level widths of the timer input to be selected. Thus, the TIS02 bit cannot be set to 1 when f_{SUB} is selected as f_{CLK} (CSS in CKC register = 1).
Caution 3. When selecting an event input signal from the ELC using timer I/O select register 0 (TIOS0), select f_{CLK} using timer clock select register 0 (TPS0).

6.3.9 Timer output enable register m (TOEm)

The TOEm register is used to enable or disable timer output of each channel.

Channel n for which timer output has been enabled becomes unable to rewrite the value of the TOmn bit of timer output register m (TOm) described later by software, and the value reflecting the setting of the timer output function through the count operation is output from the timer output pin (TOmn).

The TOEm register can be set by a 16-bit memory manipulation instruction.

The lower 8 bits of the TOEm register can be set with a 1-bit or 8-bit memory manipulation instruction with TOEmL.

Reset signal generation clears this register to 0000H.

Figure 6 - 21 Format of Timer output enable register m (TOEm)

Address: F01BAH, F01BBH (TOE0) After reset: 0000H R/W

Symbol	15	14	13	12	11	10	9	8	7	6	5	4	3	2	1	0
TOEm	0	0	0	0	0	0	0	0	0	0	0	0	TOEm3	TOEm2	TOEm1	TOEm0

TOEmn	Timer output enable/disable of channel n
0	Timer output is disabled. Timer operation is not applied to the TOmn bit and the output is fixed. Writing to the TOmn bit is enabled and the level set in the TOmn bit is output from the TOmn pin.
1	Timer output is enabled. Timer operation is applied to the TOmn bit and an output waveform is generated. Writing to the TOmn bit is ignored.

Caution **Be sure to clear bits 15 to 4 to “0”.**

Remark m: Unit number (m = 0), n: Channel number (n = 0 to 3)

6.3.10 Timer output register m (TOm)

The TOm register is a buffer register of timer output of each channel.
The value of each bit in this register is output from the timer output pin (TOmn) of each channel.
The TOmn bit oh this register can be rewritten by software only when timer output is disabled (TOEmn = 0).
When timer output is enabled (TOEmn = 1), rewriting this register by software is ignored, and the value is changed only by the timer operation.
To use the TI00, TO00, TI01/TO01, TI02/TO02, TI03/TO03, TI10/TO10 to TI13/TO13 pins as a port function pin, set the corresponding TOmn bit to “0”.
The TOm register can be set by a 16-bit memory manipulation instruction.
The lower 8 bits of the TOm register can be set with an 8-bit memory manipulation instruction with TOmL.
Reset signal generation clears this register to 0000H.

Figure 6 - 22 Format of Timer output register m (TOm)

Address: F01B8H, F01B9H (TO0) After reset: 0000H R/W

Symbol	15	14	13	12	11	10	9	8	7	6	5	4	3	2	1	0
TOm	0	0	0	0	0	0	0	0	0	0	0	0	TOm3	TOm2	TOm1	TOm0

TOmn	Timer output of channel n
0	Timer output value is “0”.
1	Timer output value is “1”.

Caution **Be sure to clear bits 15 to 4 to “0”.**

Remark m: Unit number (m = 0), n: Channel number (n = 0 to 3)

6.3.11 Timer output level register m (TOLm)

The TOLm register is a register that controls the timer output level of each channel.

The setting of the inverted output of channel n by this register is reflected at the timing of set or reset of the timer output signal while the timer output is enabled (TOEmn = 1) in the Slave channel output mode (TOMmn = 1). In the master channel output mode (TOMmn = 0), this register setting is invalid.

The TOLm register can be set by a 16-bit memory manipulation instruction.

The lower 8 bits of the TOLm register can be set with an 8-bit memory manipulation instruction with TOLmL.

Reset signal generation clears this register to 0000H.

Figure 6 - 23 Format of Timer output level register m (TOLm)

Address: F01BCH, F01BDH (TOL0) After reset: 0000H R/W

Symbol	15	14	13	12	11	10	9	8	7	6	5	4	3	2	1	0
TOLm	0	0	0	0	0	0	0	0	0	0	0	0	TOLm3	TOLm2	TOLm1	0

TOLmn	Control of timer output level of channel n
0	Positive logic output (active-high)
1	Negative logic output (active-low)

Caution Be sure to clear bits 15 to 4, and 0 to "0".

Remark 1. If the value of this register is rewritten during timer operation, the timer output logic is inverted when the timer output signal changes next, instead of immediately after the register value is rewritten.

Remark 2. m: Unit number (m = 0), n: Channel number (n = 0 to 3)

6.3.12 Timer output mode register m (TOMm)

The TOMm register is used to control the timer output mode of each channel.

When a channel is used for the independent channel operation function, set the corresponding bit of the channel to be used to 0.

When a channel is used for the simultaneous channel operation function (PWM output, one-shot pulse output, or multiple PWM output), set the corresponding bit of the master channel to 0 and the corresponding bit of the slave channel to 1.

The setting of each channel n by this register is reflected at the timing when the timer output signal is set or reset while the timer output is enabled (TOEmn = 1).

The TOMm register can be set by a 16-bit memory manipulation instruction.

The lower 8 bits of the TOMm register can be set with an 8-bit memory manipulation instruction with TOMmL.

Reset signal generation clears this register to 0000H.

Figure 6 - 24 Format of Timer output mode register m (TOMm)

Address: F01BEH, F01BFH (TOM0) After reset: 0000H R/W

Symbol	15	14	13	12	11	10	9	8	7	6	5	4	3	2	1	0
TOMm	0	0	0	0	0	0	0	0	0	0	0	0	TOMm3	TOMm2	TOMm1	0

TOMmn	Control of timer output mode of channel n
0	Master channel output mode (to produce toggle output by timer interrupt request signal (INTTMmn))
1	Slave channel output mode (output is set by the timer interrupt request signal (INTTMmn) of the master channel, and reset by the timer interrupt request signal (INTTM0p) of the slave channel)

Caution **Be sure to clear bits 15 to 4, and 0 to "0".**

Remark m: Unit number (m = 0)
n: Channel number
n = 0 to 3 (n = 0, 2 for master channel)
p: Slave channel number
n = 0, p = 1, 2, 3
n = 2, p = 3
(For details of the relation between the master channel and slave channel, refer to **6.4.1 Basic rules of simultaneous channel operation function**.)

6.3.13 Input switch control register (ISC)

The ISC1 and ISC0 bits of the ISC register are used to implement LIN-bus communication operation by using channel 3 in association with the serial array unit. When the ISC1 bit is set to 1, the input signal of the serial data input pin (RxD0) is selected as a timer input signal.

For details about setting the SSIE00 bit, see **19.3.15 Input switch control register (ISC)**.

The ISC register can be set by a 1-bit or 8-bit memory manipulation instruction.

Figure 6 - 25 Format of Input switch control register (ISC)

Address: F0073H After reset: 00H R/W

Symbol	7	6	5	4	3	2	1	0
ISC	SSIE00	0	0	0	0	0	ISC1	ISC0

SSIE00	Setting $\overline{\text{SSI00}}$ pin input when CSI00 communication and slave mode are applied
0	$\overline{\text{SSI00}}$ pin input is invalid.
1	$\overline{\text{SSI00}}$ pin input is valid.

ISC1	Switching channel 3 input of timer array unit 0
0	Uses the input signal of the TI03 pin as a timer input (normal operation).
1	Input signal of the RXD0 pin is used as timer input (detects the wakeup signal and measures the low width of the break field and the pulse width of the sync field).

ISC0	Switching external interrupt (INTP0) input
0	Uses the input signal of the INTP0 pin as an external interrupt (normal operation).
1	Uses the input signal of the RXD0 pin as an external interrupt (wakeup signal detection).

Caution **Be sure to clear bits 6 to 2 to “0”.**

Remark When the LIN-bus communication function is used, select the input signal of the RxD0 pin by setting ISC1 to 1.

6.3.14 Noise filter enable register 1 (NFEN1)

The NFEN1 register is used to set whether the noise filter can be used for the timer input signal to each channel. Enable the noise filter by setting the corresponding bits to 1 on the pins in need of noise removal. When the noise filter is enabled, after synchronization with the operating clock (f_{MCK}) for the target channel, whether the signal keeps the same value for two clock cycles is detected.

When the noise filter is OFF, only synchronization is performed with the operation clock of target channel (f_{MCK})[Note].

The NFEN1 register can be set by a 1-bit or 8-bit memory manipulation instruction.

Reset signal generation clears this register to 00H.

Note For details, see **6.5.1 (2) When valid edge of input signal via the TImn pin is selected (CCSmn = 1)**, **6.5.2 Start timing of counter**, and **6.7 Timer Input (TImn) Control**.

Figure 6 - 26 Format of Noise filter enable register 1 (NFEN1)

Address: F0071H After reset: 00H R/W

Symbol	7	6	5	4	3	2	1	0
NFEN1	0	0	0	0	TNFEN03	TNFEN02	TNFEN01	TNFEN00

TNFEN03	Enable/disable using noise filter of TI03 pin or RxD0 pin input signal[Note]
0	Noise filter OFF (synchronization only)
1	Noise filter ON

TNFEN02	Enable/disable using noise filter of TI02 pin input signal
0	Noise filter OFF (synchronization only)
1	Noise filter ON

TNFEN01	Enable/disable using noise filter of TI01 pin input signal
0	Noise filter OFF (synchronization only)
1	Noise filter ON

TNFEN00	Enable/disable using noise filter of TI00 pin input signal
0	Noise filter OFF (synchronization only)
1	Noise filter ON

Note The applicable pin can be switched by setting the ISC1 bit of the ISC register.
ISC1 = 0: Whether or not to use the noise filter of the TI03 pin can be selected.
ISC1 = 1: Whether or not to use the noise filter of the RxD0 pin can be selected.

Remark The presence or absence of timer I/O pins of channel 0 to 3 depends on the product. See **Table 6 - 2 Timer I/O Pins provided in Each Product** for details.

6.3.15 Registers controlling port functions of pins to be used for timer I/O

Using port pins for the timer array unit functions requires setting of the registers that control the port functions multiplexed on the target pins (port mode register (PMxx), port register (Pxx), and port mode control register (PMCxx)). For details, see **4.3.1 Port mode registers (PMxx)**, **4.3.2 Port registers (Pxx)**, and **4.3.6 Port mode control registers (PMCxx)**.
The port mode register (PMxx), port register (Pxx), and port mode control register (PMCxx) to be set depend on the product. For details, see **4.5 Register Settings When Using Alternate Function**.

When using the ports (such as P00/TI00 and P01/TO00) to be shared with the timer output pin for timer output, set the port mode control register (PMCxx) bit, port mode register (PMxx) bit and port register (Pxx) bit corresponding to each port to 0.

Example: When using P01/TO00 for timer output
Set the PMC01 bit of port mode control register 0 to 0.
Set the PM01 bit of port mode register 0 to 0.
Set the P01 bit of port register 0 to 0.

When using the ports (such as P00/TI00) to be shared with the timer input pin for timer input, set the port mode register (PMxx) bit corresponding to each port to 1. And set the port mode control register (PMCxx) bit corresponding to each port to 0. At this time, the port register (Pxx) bit may be 0 or 1.

Example: When using P00/TI00 for timer input
Set the PMC00 bit of port mode control register 0 to 0.
Set the PM00 bit of port mode register 0 to 1.
Set the P00 bit of port register 0 to 0 or 1.

6.4 Basic Rules of Timer Array Unit

6.4.1 Basic rules of simultaneous channel operation function

When simultaneously using multiple channels, namely, a combination of a master channel (a reference timer mainly counting the cycle) and slave channels (timers operating according to the master channel), the following rules apply.

(1) Only an even channel (channel 0, 2) can be set as a master channel.
(2) Any channel, except channel 0, can be set as a slave channel.
(3) The slave channel must be lower than the master channel.
Example: If channel 0 is set as a master channel, channel 1 or those that follow (channels 1, 2, 3) can be set as a slave channel.

(4) Two or more slave channels can be set for one master channel.
(5) When two or more master channels are to be used, slave channels with a master channel between them may not be set.
Example: If channels 0 and 2 are set as master channels, channels 1 can be set as the slave channel of master channel 0. Channel 3 cannot be set as the slave channel of master channel 0.

(6) The operating clock for a slave channel in combination with a master channel must be the same as that of the master channel. The CKSmn0, CKSmn1 bits (bit 15, 14 of timer mode register mn (TMRmn)) of the slave channel that operates in combination with the master channel must be the same value as that of the master channel.
(7) A master channel can transmit INTTMmn (interrupt), start software trigger, and count clock to the lower channels.
(8) A slave channel can use INTTMmn (interrupt), a start software trigger, or the count clock of the master channel as a source clock, but cannot transmit its own INTTMmn (interrupt), start software trigger, or count clock to channels with lower channel numbers.
(9) A master channel cannot use INTTMmn (interrupt), a start software trigger, or the count clock from the other higher master channel as a source clock.
(10) To simultaneously start channels that operate in combination, the channel start trigger bit (TSmn) of the channels in combination must be set at the same time.
(11) During the counting operation, a TSmn bit of a master channel or TSmn bits of all channels which are operating simultaneously can be set. It cannot be applied to TSmn bits of slave channels alone.
(12) To stop the channels in combination simultaneously, the channel stop trigger bit (TTmn) of the channels in combination must be set at the same time.
(13) CKm2/CKm3 cannot be selected while channels are operating simultaneously, because the operating clocks of master channels and slave channels have to be synchronized.
(14) Timer mode register m0 (TMRm0) has no master bit (it is fixed as “0”). However, as channel 0 is the highest channel, it can be used as a master channel during simultaneous operation.

The rules of the simultaneous channel operation function are applied in a channel group (a master channel and slave channels forming one simultaneous channel operation function).
If two or more channel groups that do not operate in combination are specified, the basic rules of the simultaneous channel operation function in **6.4.1 Basic rules of simultaneous channel operation function** do not apply to the channel groups.

Remark m: Unit number (m = 0), n: Channel number (n = 0 to 3)

Example 1

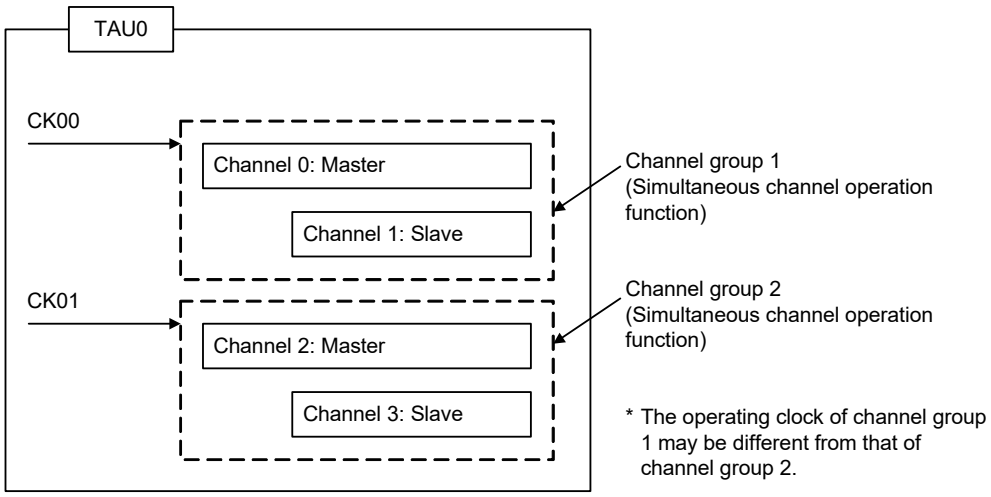

Example 2

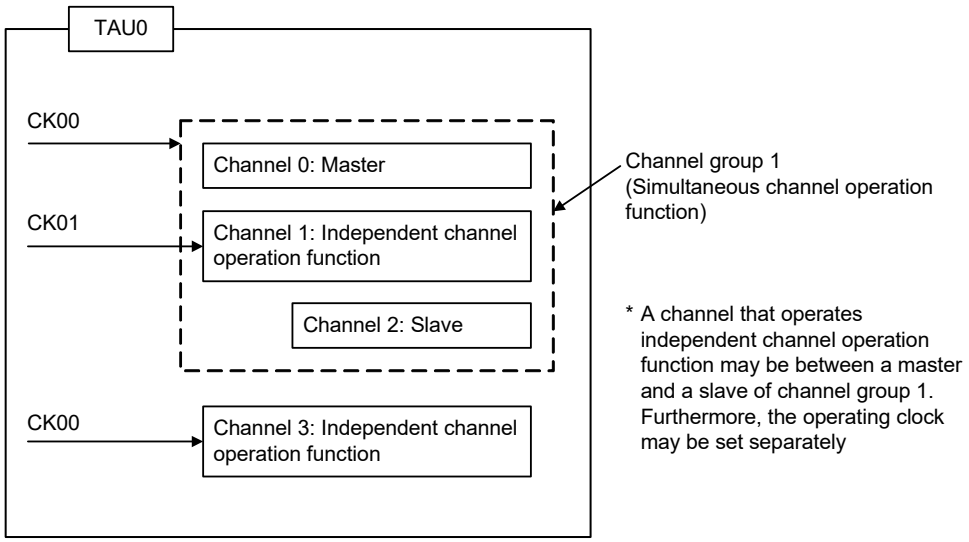

6.4.2 Basic rules of 8-bit timer operation function (channels 1 and 3 only)

The 8-bit timer operation function makes it possible to use a 16-bit timer channel in a configuration consisting of two 8-bit timer channels.
This function can only be used for channels 1 and 3, and there are several rules for using it.
The basic rules for this function are as follows:

(1) The 8-bit timer operation function applies only to channels 1 and 3.
(2) When using 8-bit timers, set the SPLIT bit of timer mode register mn (TMRmn) to 1.
(3) The higher 8 bits can be operated as the interval timer function.
(4) At the start of operation, the higher 8 bits output INTTMm1H/INTTMm3H (an interrupt) (which is the same operation performed when MDmn0 is set to 1).
(5) The operation clock of the higher 8 bits is selected according to the CKSmn1 and CKSmn0 bits of the lower-bit TMRmn register.
(6) For the higher 8 bits, the TSHm1/TSHm3 bit is manipulated to start channel operation and the TTHm1/TTHm3 bit is manipulated to stop channel operation. The channel status can be checked using the TEHm1/TEHm3 bit.
(7) The lower 8 bits operate according to the TMRmn register settings. The following three functions support operation of the lower 8 bits:
- Interval timer function
- External event counter function
- Delay count function

(8) For the lower 8 bits, the TSm1/TSm3 bit is manipulated to start channel operation and the TTm1/TTm3 bit is manipulated to stop channel operation. The channel status can be checked using the TEm1/TEm3 bit.
(9) During 16-bit operation, manipulating the TSHm1, TSHm3, TTHm1, and TTHm3 bits is invalid. The TSm1, TSm3, TTm1, and TTm3 bits are manipulated to operate channels 1 and 3. The TEHm3 and TEHm1 bits are not changed.
(10) For the 8-bit timer function, the simultaneous operation functions (one-shot pulse, PWM, and multiple PWM) cannot be used.

Remark m: Unit number (m = 0), n: Channel number (n = 1, 3)

6.5 Operation of Counter

6.5.1 Count clock (f_{TCLK})

The count clock (f_{TCLK}) of the timer array unit can be selected between following by CCSmn bit of timer mode register mn (TMRmn).

- Operation clock (f_{MCK}) specified by the CKSmn0 and CKSmn1 bits
- Valid edge of input signal input from the TImn pin

Because the timer array unit is designed to operate in synchronization with f_{CLK}, the timings of the count clock (f_{TCLK}) are shown below.

(1) When operation clock (f_{MCK}) specified by the CKSmn0 and CKSmn1 bits is selected (CCSmn = 0)
The count clock (f_{TCLK}) is between f_{CLK} to $f_{CLK}/2^{15}$ by setting of timer clock select register m (TPSm). When a divided f_{CLK} is selected, however, the clock selected in TPSmn register, but a signal which becomes high level for one period of f_{CLK} from its rising edge. When a f_{CLK} is selected, fixed to high level.
Counting of timer count register mn (TCRmn) delayed by one period of f_{CLK} from rising edge of the count clock, because of synchronization with f_{CLK}. But, this is described as “counting at rising edge of the count clock”, as a matter of convenience.

Figure 6 - 27 Timing of f_{CLK} and Count Clock (f_{TCLK}) (When CCSmn = 0)

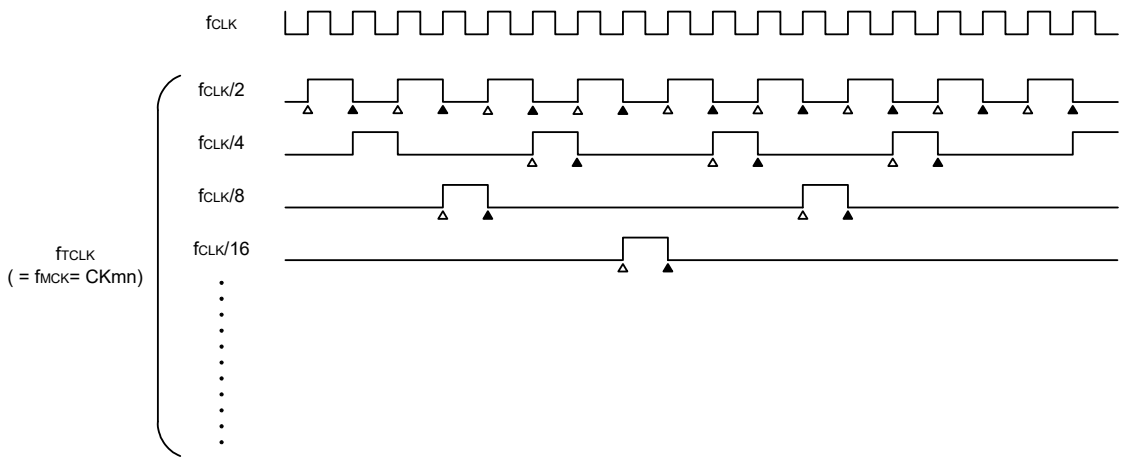

Remark 1. △ : Rising edge of the count clock
▲ : Synchronization, increment/decrement of counter
Remark 2. f_{CLK}: CPU/peripheral hardware clock

(2) When valid edge of input signal via the TImn pin is selected (CCSmn = 1)

The count clock (f_{TCLK}) becomes the signal that detects valid edge of input signal via the TImn pin and synchronizes next rising f_{MCK}. The count clock (f_{TCLK}) is delayed for 1 to 2 period of f_{MCK} from the input signal via the TImn pin (when a noise filter is used, the delay becomes 3 to 4 clock).

Counting of timer count register mn (TCRmn) delayed by one period of f_{CLK} from rising edge of the count clock, because of synchronization with f_{CLK}. But, this is described as “counting at valid edge of input signal via the TImn pin”, as a matter of convenience.

Figure 6 - 28 Timing of f_{CLK} and Count Clock (f_{TCLK}) (When CCSmn = 1, noise filter unused)

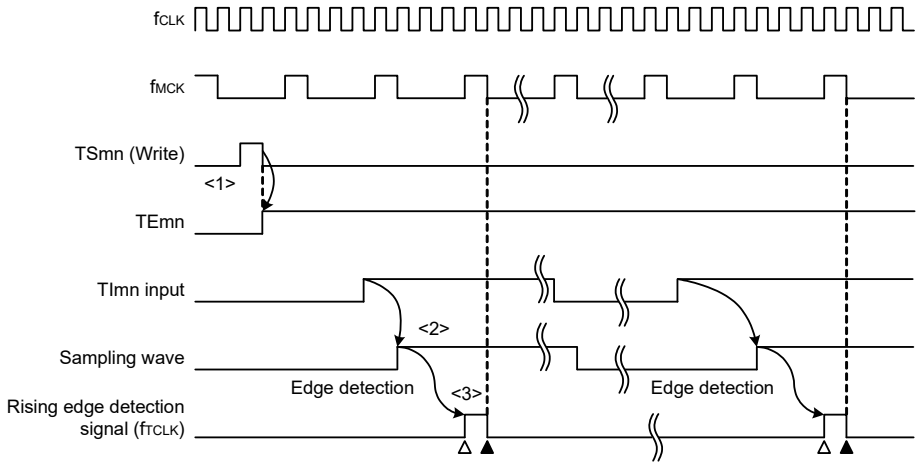

<1> Setting TSmn bit to 1 enables the timer to be started and to become wait state for valid edge of input signal via the TImn pin.
<2> The rise of input signal via the TImn pin is sampled by f_{MCK}.
<3> The edge is detected by the rising of the sampled signal and the detection signal (count clock) is output.

Remark 1. △ : Rising edge of the count clock
▲ : Synchronization, increment/decrement of counter

Remark 2. f_{CLK}: CPU/peripheral hardware clock
f_{MCK}: Operation clock of channel n

Remark 3. The waveform of the input signal via TImn pin of the input pulse interval measurement, the measurement of high/low width of input signal, and the delay counter, and the one-shot pulse output are the same as that shown in Figure 6 - 28.

6.5.2 Start timing of counter

Timer count register mn (TCRmn) becomes enabled to operation by setting of TSmn bit of timer channel start register m (TSm).

Operations from count operation enabled state to timer count Register mn (TCRmn) count start is shown in Table 6 - 6.

Table 6 - 6 Operations from Count Operation Enabled State to Timer Count Register mn (TCRmn) Count Start

Timer operation mode	Operation when TSmn = 1 is set
• Interval timer mode	No operation is carried out from start trigger detection (TSmn=1) until count clock generation. The first count clock loads the value of the TDRmn register to the TCRmn register and the subsequent count clock performs count down operation (see **6.5.3 (1) Operation of interval timer mode**).
• Event counter mode	Writing 1 to the TSmn bit loads the value of the TDRmn register to the TCRmn register. If detect edge of TImn input, the subsequent count clock performs count down operation (see **6.5.3 (2) Operation of event counter mode**).
• Capture mode	No operation is carried out from start trigger detection until count clock generation. The first count clock loads 0000H to the TCRmn register and the subsequent count clock performs count up operation (see **6.5.3 (3) Operation of capture mode (input pulse interval measurement)**).
• One-count mode	The waiting-for-start-trigger state is entered by writing 1 to the TSmn bit while the timer is stopped (TEmn = 0). No operation is carried out from start trigger detection until count clock generation. The first count clock loads the value of the TDRmn register to the TCRmn register and the subsequent count clock performs count down operation (see **6.5.3 (4) Operation of one-count mode**).
• Capture & one-count mode	The waiting-for-start-trigger state is entered by writing 1 to the TSmn bit while the timer is stopped (TEmn = 0). No operation is carried out from start trigger detection until count clock generation. The first count clock loads 0000H to the TCRmn register and the subsequent count clock performs count up operation (see **6.5.3 (5) Operation of capture & one-count mode (high-level width measurement)**).

6.5.3 Operation of counter

Here, the counter operation in each mode is explained.

(1) Operation of interval timer mode

<1> Operation is enabled (TEmn = 1) by writing 1 to the TSmn bit. Timer count register mn (TCRmn) holds the initial value until count clock generation.

<2> A start trigger is generated at the first count clock after operation is enabled.

<3> When the MDmn0 bit is set to 1, INTTMmn is generated by the start trigger.

<4> By the first count clock after the operation enable, the value of timer data register mn (TDRmn) is loaded to the TCRmn register and counting starts in the interval timer mode.

<5> When the TCRmn register counts down and its count value is 0000H, INTTMmn is generated and the value of timer data register mn (TDRmn) is loaded to the TCRmn register and counting keeps on.

Figure 6 - 29 Operation Timing (In Interval Timer Mode)

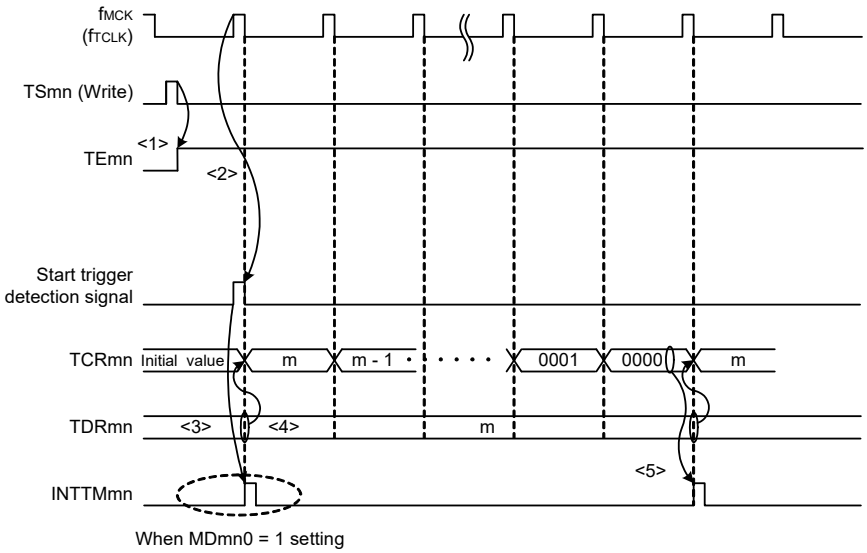

Caution **In the first cycle operation of count clock after writing the TSmn bit, an error at a maximum of one clock is generated since count start delays until count clock has been generated. When the information on count start timing is necessary, an interrupt can be generated at count start by setting MDmn0 = 1.**

Remark f_{MCK}, the start trigger detection signal, and INTTMmn become active between one clock in synchronization with f_{CLK}.

(2) Operation of event counter mode

<1> Timer count register mn (TCRmn) holds its initial value while operation is stopped (TEmn = 0).

<2> Operation is enabled (TEmn = 1) by writing 1 to the TSmn bit.

<3> As soon as 1 has been written to the TSmn bit and 1 has been set to the TEmn bit, the value of timer data register mn (TDRmn) is loaded to the TCRmn register to start counting.

<4> After that, the TCRmn register value is counted down according to the count clock of the valid edge of the TImn input.

Figure 6 - 30 Operation Timing (In Event Counter Mode)

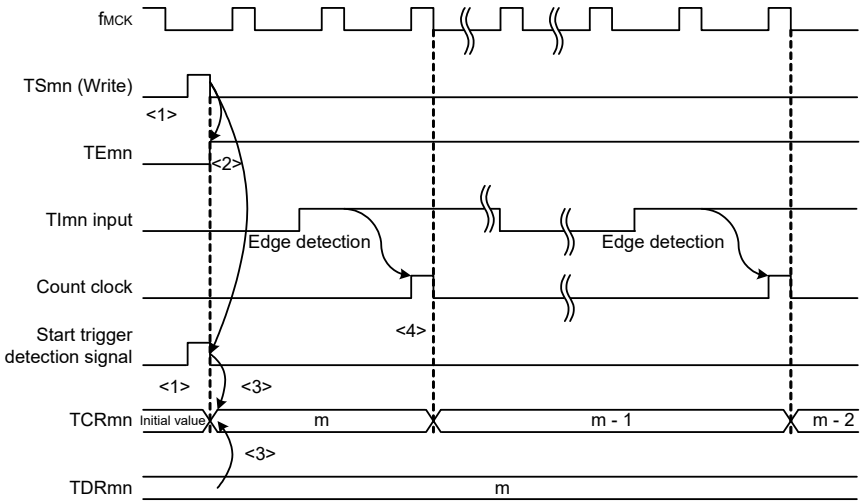

Remark Figure 6 - 30 shows the timing when the noise filter is not used. By making the noise filter on-state, the edge detection becomes 2 fMCK cycles (it sums up to 3 to 4 cycles) later than the normal cycle of TImn input. The error per one period occurs be the asynchronous between the period of the TImn input and that of the count clock (fMCK).

(3) Operation of capture mode (input pulse interval measurement)

<1> Operation is enabled (TEmn = 1) by writing 1 to the TSmn bit.

<2> Timer count register mn (TCRmn) holds the initial value until count clock generation.

<3> A start trigger is generated at the first count clock after operation is enabled. And the value of 0000H is loaded to the TCRmn register and counting starts in the capture mode. (When the MDmn0 bit is set to 1, INTTMmn is generated by the start trigger.)

<4> On detection of the valid edge of the TImn input, the value of the TCRmn register is captured to timer data register mn (TDRmn) and INTTMmn is generated. However, this capture value is no meaning. The TCRmn register keeps on counting from 0000H.

<5> On next detection of the valid edge of the TImn input, the value of the TCRmn register is captured to timer data register mn (TDRmn) and INTTMmn is generated.

Figure 6 - 31 Operation Timing (In Capture Mode: Input Pulse Interval Measurement)

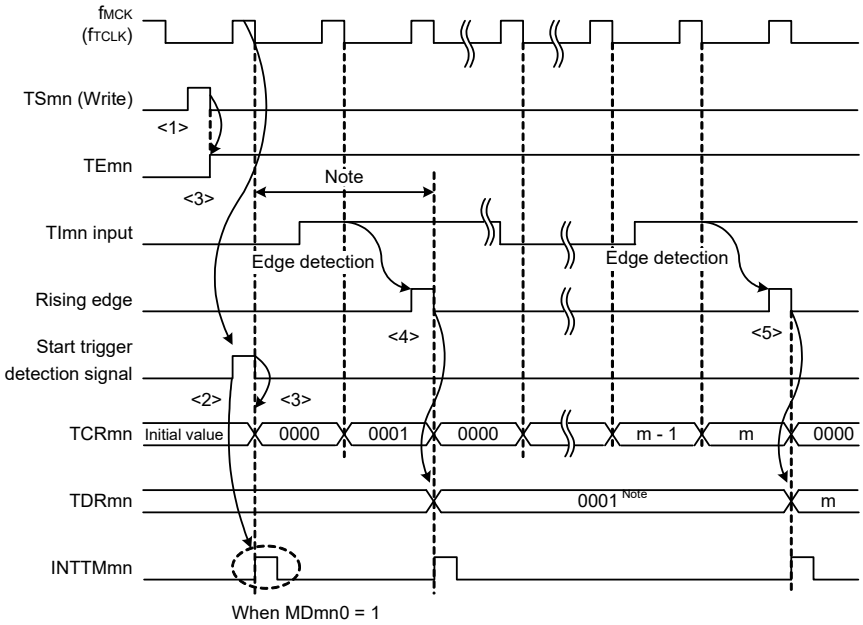

Note If a clock has been input to TImn (the trigger exists) when capturing starts, counting starts when a trigger is detected, even if no edge is detected. Therefore, the first captured value (<4>) does not determine a pulse interval (in the above figure, 0001 just indicates two clock cycles but does not determine the pulse interval) and so the user can ignore it.

Caution **In the first cycle operation of count clock after writing the TSmn bit, an error at a maximum of one clock is generated since count start delays until count clock has been generated. When the information on count start timing is necessary, an interrupt can be generated at count start by setting MDmn0 = 1.**

Remark Figure 6 - 31 shows the timing when the noise filter is not used. By making the noise filter on-state, the edge detection becomes 2 fMCK cycles (it sums up to 3 to 4 cycles) later than the normal cycle of TImn input. The error per one period occurs be the asynchronous between the period of the TImn input and that of the count clock (fMCK).

(4) Operation of one-count mode

<1> Operation is enabled (TEmn = 1) by writing 1 to the TSmn bit.

<2> Timer count register mn (TCRmn) holds the initial value until start trigger generation.

<3> Rising edge of the TImn input is detected.

<4> On start trigger detection, the value of timer data register mn (TDRmn) is loaded to the TCRmn register and count starts.

<5> When the TCRmn register counts down and its count value is 0000H, INTTMmn is generated and the value of the TCRmn register becomes FFFFH and counting stops.

Figure 6 - 32 Operation Timing (In One-count Mode)

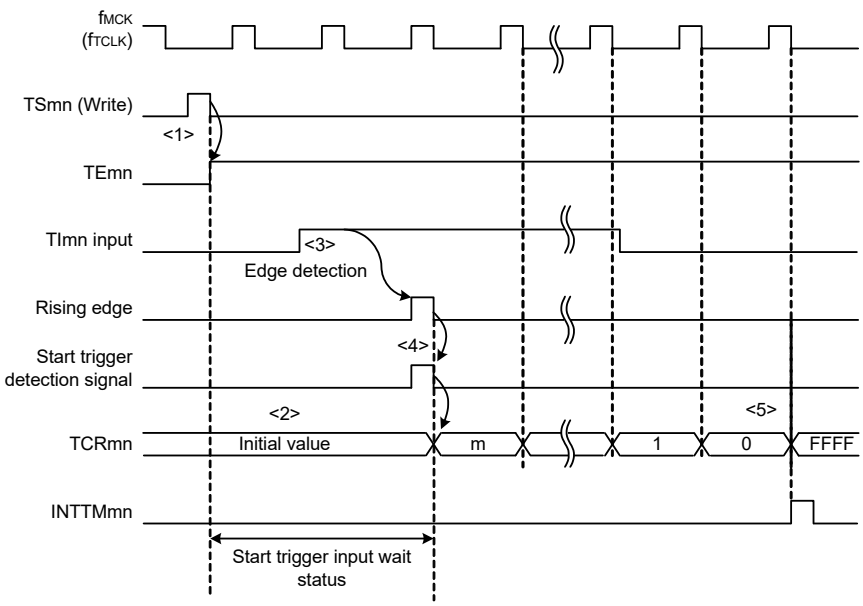

Remark Figure 6 - 32 shows the timing when the noise filter is not used. By making the noise filter on-state, the edge detection becomes 2 fMCK cycles (it sums up to 3 to 4 cycles) later than the normal cycle of TImn input. The error per one period occurs be the asynchronous between the period of the TImn input and that of the count clock (fMCK).

(5) Operation of capture & one-count mode (high-level width measurement)

<1> Operation is enabled (TEmn = 1) by writing 1 to the TSmn bit of timer channel start register m (TSm).

<2> Timer count register mn (TCRmn) holds the initial value until start trigger generation.

<3> Rising edge of the TImn input is detected.

<4> On start trigger detection, the value of 0000H is loaded to the TCRmn register and count starts.

<5> On detection of the falling edge of the TImn input, the value of the TCRmn register is captured to timer data register mn (TDRmn) and INTTMmn is generated.

Figure 6 - 33 Operation Timing (In Capture & One-count Mode: High-level Width Measurement)

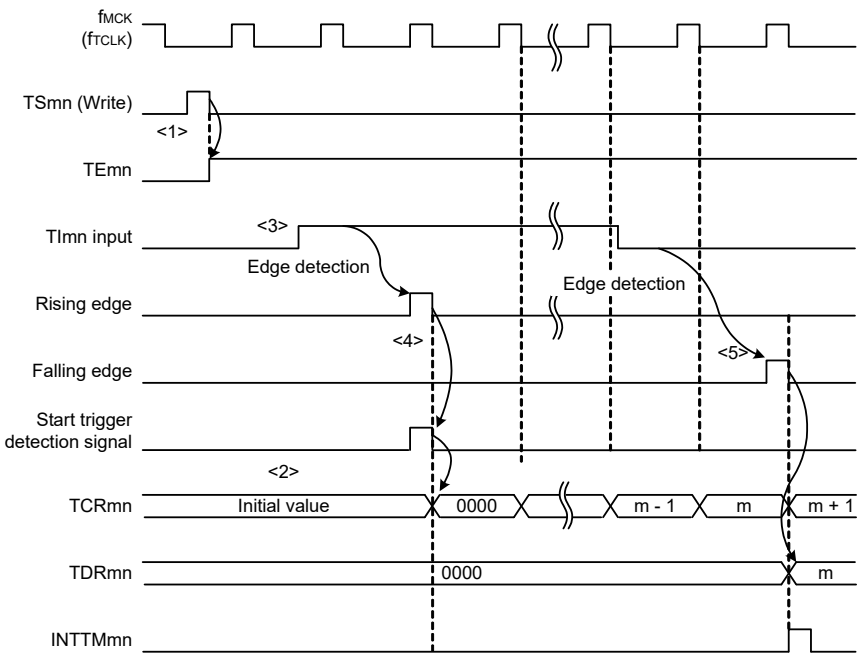

Remark Figure 6 - 33 shows the timing when the noise filter is not used. By making the noise filter on-state, the edge detection becomes 2 fMCK cycles (it sums up to 3 to 4 cycles) later than the normal cycle of TImn input. The error per one period occurs be the asynchronous between the period of the TImn input and that of the count clock (fMCK).

6.6 Channel Output (TOmn pin) Control

6.6.1 TOmn pin output circuit configuration

Figure 6 - 34 Output Circuit Configuration

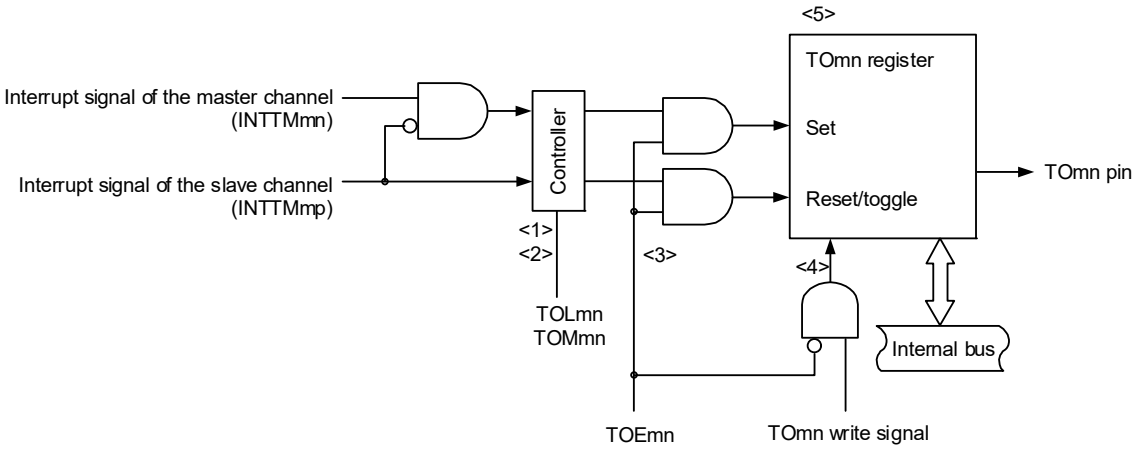

The following describes the TOmn pin output circuit.

<1> When TOMmn = 0 (master channel output mode), the set value of timer output level register m (TOLm) is ignored and only INTTM0p (slave channel timer interrupt) is transmitted to timer output register m (TOm).

<2> When TOMmn = 1 (slave channel output mode), both INTTMmn (master channel timer interrupt) and INTTM0p (slave channel timer interrupt) are transmitted to the TOm register.
At this time, the TOLm register becomes valid and the signals are controlled as follows:

When TOLmn = 0: Forward operation (INTTMmn → set, INTTM0p → reset)
When TOLmn = 1: Reverse operation (INTTMmn → reset, INTTM0p → set)

When INTTMmn and INTTM0p are simultaneously generated, (0% output of PWM), INTTM0p (reset signal) takes priority, and INTTMmn (set signal) is masked.

<3> While timer output is enabled (TOEmn = 1), INTTMmn (master channel timer interrupt) and INTTM0p (slave channel timer interrupt) are transmitted to the TOm register. Writing to the TOm register (TOmn write signal) becomes invalid.
When TOEmn = 1, the TOmn pin output never changes with signals other than interrupt signals.
To initialize the TOmn pin output level, it is necessary to set timer operation is stopped (TOEmn = 0) and to write a value to the TOm register.

<4> While timer output is disabled (TOEmn = 0), writing to the TOmn bit to the target channel (TOmn write signal) becomes valid. When timer output is disabled (TOEmn = 0), neither INTTMmn (master channel timer interrupt) nor INTTM0p (slave channel timer interrupt) is transmitted to the TOm register.

<5> The TOm register can always be read, and the TOmn pin output level can be checked.

Remark m: Unit number (m = 0)
n: Channel number
n = 0 to 3 (n = 0, 2 for master channel)
p: Slave channel number
n = 0: p = 1, 2, 3
n = 2: p = 3

6.6.2 TOmn Pin Output Setting

The following figure shows the procedure and status transition of the TOmn output pin from initial setting to timer operation start.

Figure 6 - 35 Status Transition from Timer Output Setting to Operation Start

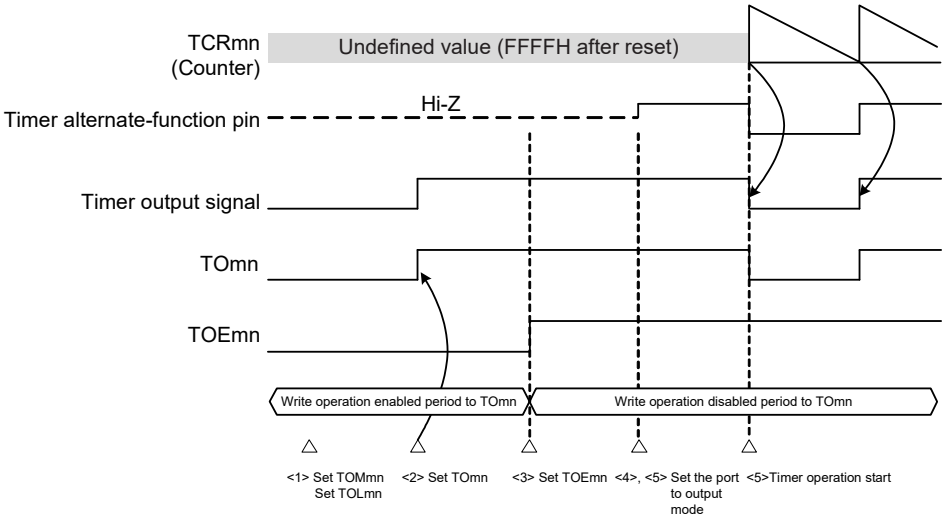

<1> The operation mode of timer output is set.

- TOMmn bit (0: Master channel output mode, 1: Slave channel output mode)
- TOLmn bit (0: Positive logic output, 1: Negative logic output)

<2> The timer output signal is set to the initial status by setting timer output register m (TOm).

<3> The timer output operation is enabled by writing 1 to the TOEmn bit (writing to the TOm register is disabled).

<4> The port is set to digital I/O by port mode control register (PMCxx) (see **6.3.15 Registers controlling port functions of pins to be used for timer I/O**).

<5> The port I/O setting is set to output (see **6.3.15 Registers controlling port functions of pins to be used for timer I/O**).

<6> The timer operation is enabled (TSmn = 1).

Remark m: Unit number (m = 0), n: Channel number (n = 0 to 3)

6.6.3 Cautions on Channel Output Operation

(1) Changing values set in the registers TOm, TOEm, TOLm, and TOMm during timer operation

Since the timer operations (operations of timer count register mn (TCRmn) and timer data register mn (TDRmn)) are independent of the TOmn output circuit and changing the values set in timer output register m (TOm), timer output enable register m (TOEm), and timer output level register m (TOLm) does not affect the timer operation, the values can be changed during timer operation. To output an expected waveform from the TOmn pin by timer operation, however, set the TOm, TOEm, TOLm, and TOMm registers to the values stated in the register setting example of each operation shown by 6.8 and 6.9.

When the values set to the TOEm and TOLm registers (but not the TOm register) are changed close to the occurrence of the timer interrupt (INTTMmn) of each channel, the waveform output to the TOmn pin might differ, depending on whether the values are changed immediately before or immediately after the timer interrupt (INTTMmn) occurs.

Remark m: Unit number (m = 0), n: Channel number (n = 0 to 3)

(2) Default level of TOmn pin and output level after timer operation start

The change in the output level of the TOmn pin when timer output register m (TOm) is written while timer output is disabled (TOEmn = 0), the initial level is changed, and then timer output is enabled (TOEmn = 1) before port output is enabled, is shown below.

(a) When operation starts with master channel output mode (TOMmn = 0) setting

The setting of timer output level register m (TOLm) is invalid when master channel output mode (TOMmn = 0). When the timer operation starts after setting the default level, the toggle signal is generated and the output level of the TOmn pin is reversed.

Figure 6 - 36 TOmn Pin Output Status at Toggle Output (TOMmn = 0)

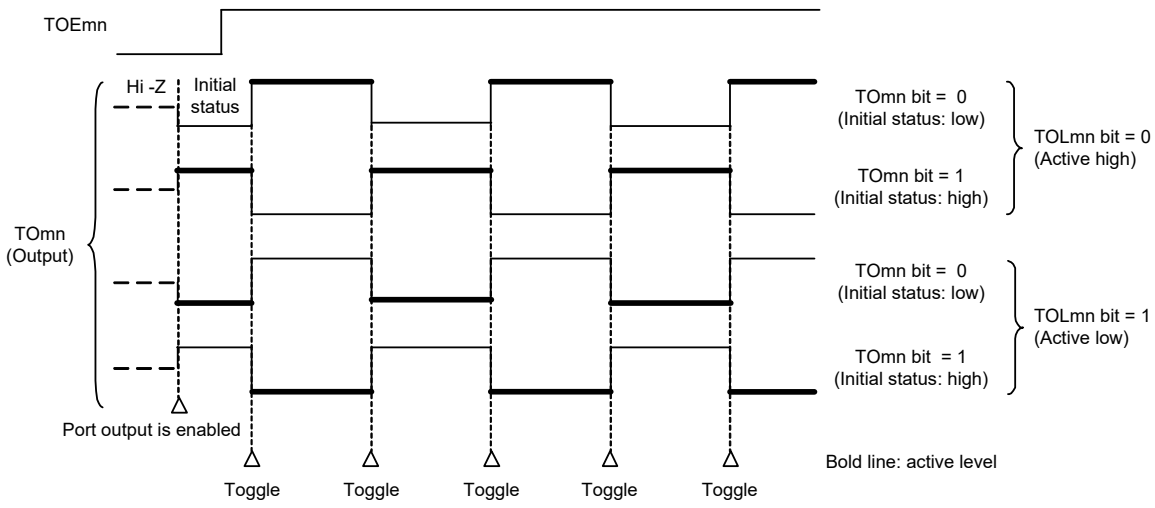

Remark 1. Toggle: Reverse TOmn pin output status

Remark 2. m: Unit number (m = 0), n: Channel number (n = 0 to 3)

(b) When operation starts with slave channel output mode (TOMmn = 1) setting (PWM output))
When slave channel output mode (TOMmn = 1), the active level is determined by timer output level register m (TOLm) setting.

Figure 6 - 37 TOmn Pin Output Status at PWM Output (TOMmn = 1)

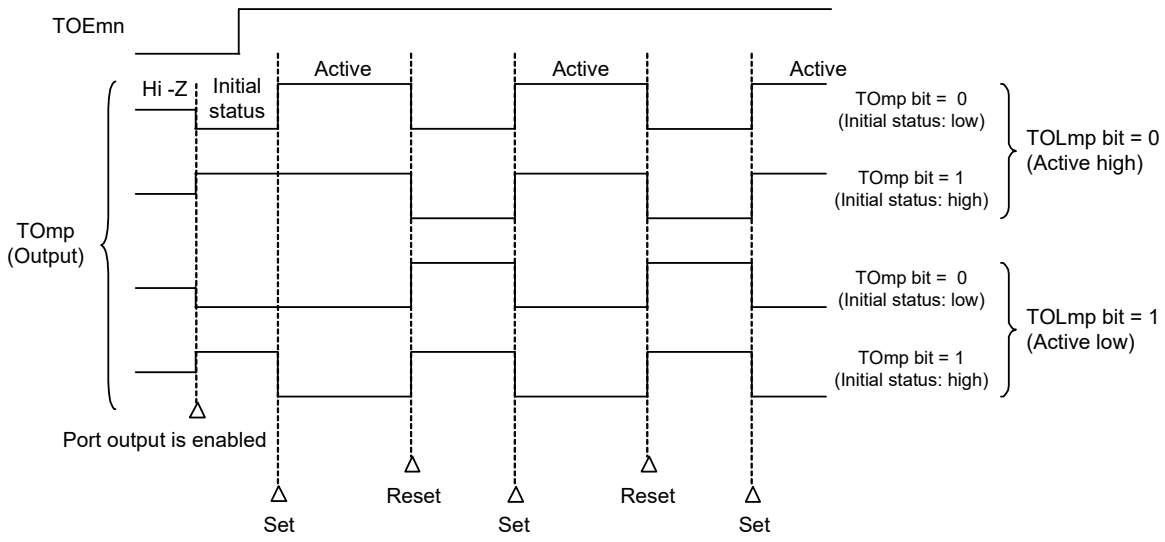

Remark 1. Set: The output signal of the TOmp pin changes from inactive level to active level.
Reset: The output signal of the TOmp pin changes from active level to inactive level.

Remark 2. m: Unit number (m = 0), n: Channel number (p = 1 to 3)

(3) Operation of TOmn pin in slave channel output mode (TOMmn = 1)

(a) When timer output level register m (TOLm) setting has been changed during timer operation

When the TOLm register setting has been changed during timer operation, the setting becomes valid at the generation timing of the TOmn pin change condition. Rewriting the TOLm register does not change the output level of the TOmn pin.

The operation when TOMmn is set to 1 and the value of the TOLm register is changed while the timer is operating (TEmn = 1) is shown below.

Figure 6 - 38 Operation when TOLm Register Has Been Changed during Timer Operation

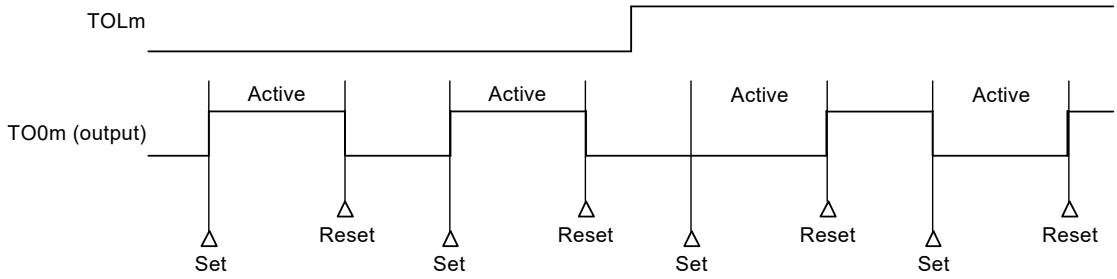

Remark 1. Set: The output signal of the TOmn pin changes from inactive level to active level.
Reset: The output signal of the TOmn pin changes from active level to inactive level.

Remark 2. m: Unit number (m = 0), n: Channel number (n = 0 to 3)

(b) Set/reset timing

To realize 0%/100% output at PWM output, the TOmn pin/TOmn bit set timing at master channel timer interrupt (INTTMmn) generation is delayed by 1 count clock by the slave channel.

If the set condition and reset condition are generated at the same time, a higher priority is given to the latter.

Figure 6 - 39 shows the set/reset operating statuses where the master/slave channels are set as follows.

Master channel: TOEmn = 1, TOMmn = 0, TOLmn = 0

Slave channel: TOEmp = 1, TOMmp = 1, TOLmp = 0

Figure 6 - 39 Set/Reset Timing Operating Statuses

(1) Basic operation timing

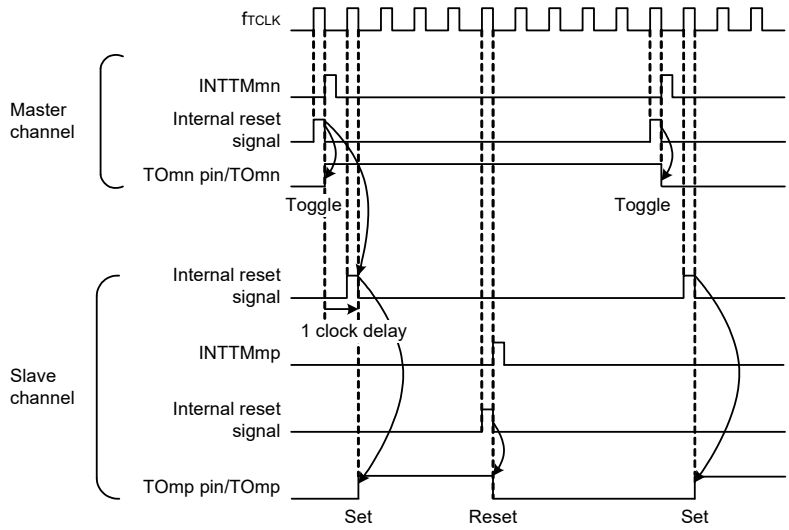

(2) Operation timing when 0% duty

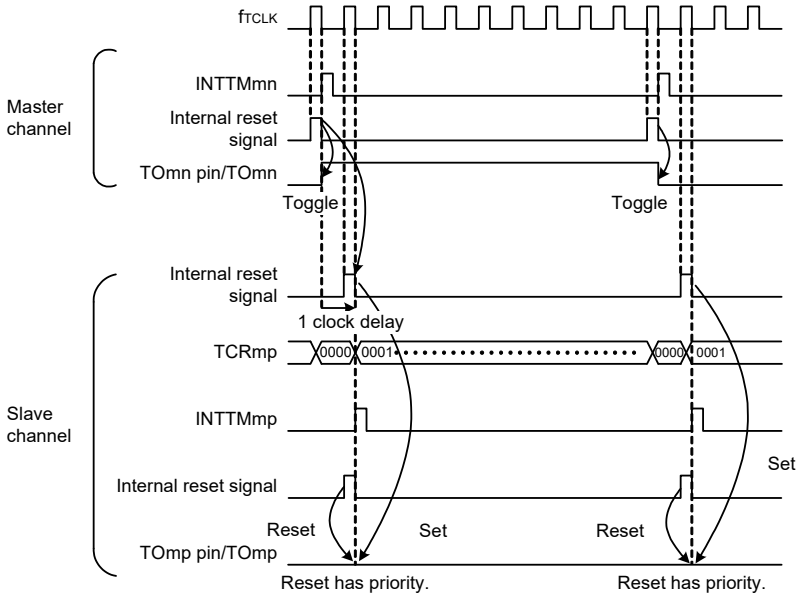

Remark 1. Internal reset signal: TOmn pin reset/toggle signal
Internal set signal: TOmn pin set signal

Remark 2. m: Unit number (m = 0)
n: Channel number
n = 0 to 3 (n = 0, 2 for master channel)
p: Slave channel number
n = 0: p = 1, 2, 3
n = 2: p = 3

6.6.4 Collective manipulation of TOmn bit

In timer output register m (TOm), the setting bits for all the channels are located in one register in the same way as timer channel start register m (TSm). Therefore, the TOmn bit of all the channels can be manipulated collectively.

Only the desired bits can also be manipulated by enabling writing only to the TOmn bits (TOEmn = 0) that correspond to the relevant bits of the channel used to perform output (TOmn).

Figure 6 - 40 Example of TO0n Bit Collective Manipulation

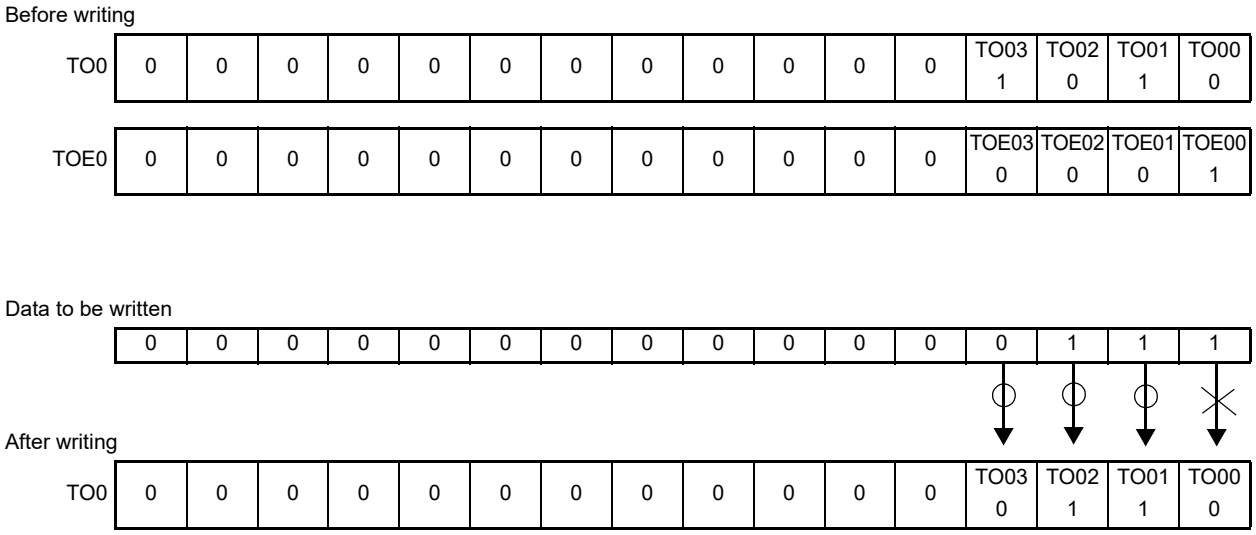

Writing is done only to the TOmn bit with TOEmn = 0, and writing to the TOmn bit with TOEmn = 1 is ignored. TOmn (channel output) to which TOEmn = 1 is set is not affected by the write operation. Even if the write operation is done to the TOmn bit, it is ignored and the output change by timer operation is normally done.

Remark m: Unit number (m = 0), n: Channel number (n = 0 to 3)

Figure 6 - 41 TO0n Pin Statuses by Collective Manipulation of TO0n Bit

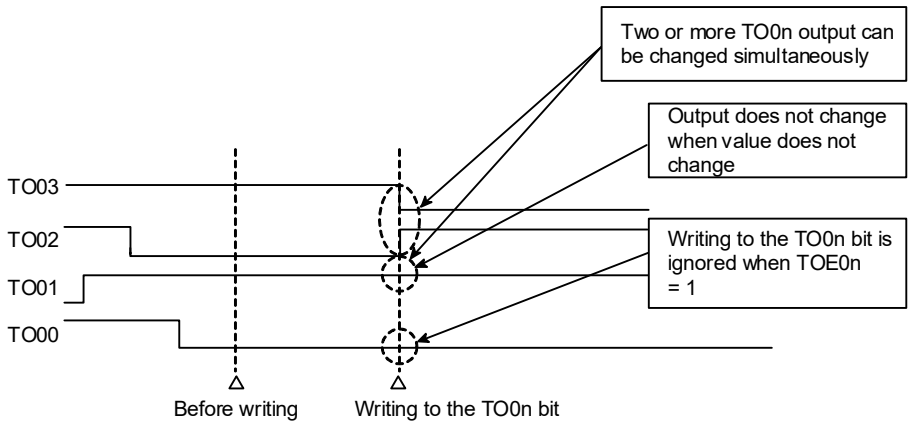

Remark m: Unit number (m = 0), n: Channel number (n = 0 to 3)

6.6.5 Timer Interrupt and TOmn Pin Output at Operation Start

In the interval timer mode or capture mode, the MDmn0 bit in timer mode register mn (TMRmn) sets whether or not to generate a timer interrupt at count start.

When MDmn0 is set to 1, the count operation start timing can be known by the timer interrupt (INTTMmn) generation.

In the other modes, neither timer interrupt at count operation start nor TOmn output is controlled.

Figure 6 - 42 shows operation examples when the interval timer mode (TOEmn = 1, TOMmn = 0) is set.

Figure 6 - 42 Operation examples of timer interrupt at count operation start and TOmn output

(a) When MDmn0 is set to 1

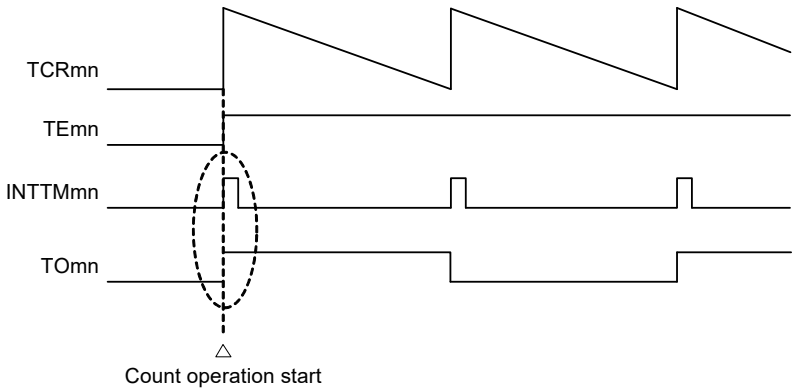

When MDmn0 is set to 1, a timer interrupt (INTTMmn) is output at count operation start, and TOmn performs a toggle operation.

(b) When MDmn0 is set to 0

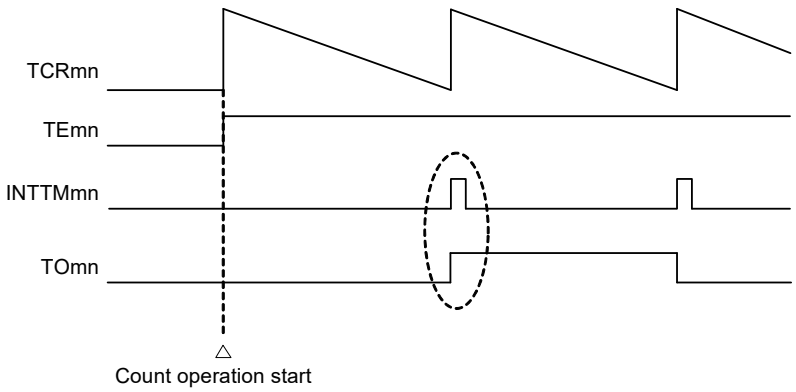

When MDmn0 is set to 0, a timer interrupt (INTTMmn) is not output at count operation start, and TOmn does not change either. After counting one cycle, INTTMmn is output and TOmn performs a toggle operation.

Remark m: Unit number (m = 0), n: Channel number (n = 0 to 3)

6.7 Timer Input (TImn) Control

6.7.1 TImn input circuit configuration

A signal is input from a timer input pin, goes through a noise filter and an edge detector, and is sent to a timer controller.

Enable the noise filter for the pin in need of noise removal. The following shows the configuration of the input circuit.

Figure 6 - 43 Input Circuit Configuration

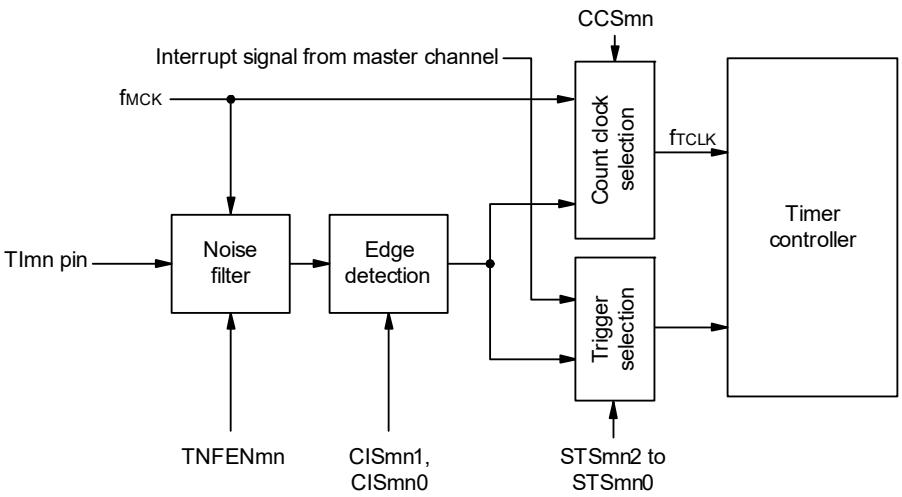

6.7.2 Noise filter

When the noise filter is disabled, the input signal is only synchronized with the operating clock (fMCK) for channel n. When the noise filter is enabled, after synchronization with the operating clock (fMCK) for channel n, whether the signal keeps the same value for two clock cycles is detected. The following shows differences in waveforms output from the noise filter between when the noise filter is enabled and disabled.

Figure 6 - 44 Sampling Waveforms through TImn Input Pin with Noise Filter Enabled and Disabled

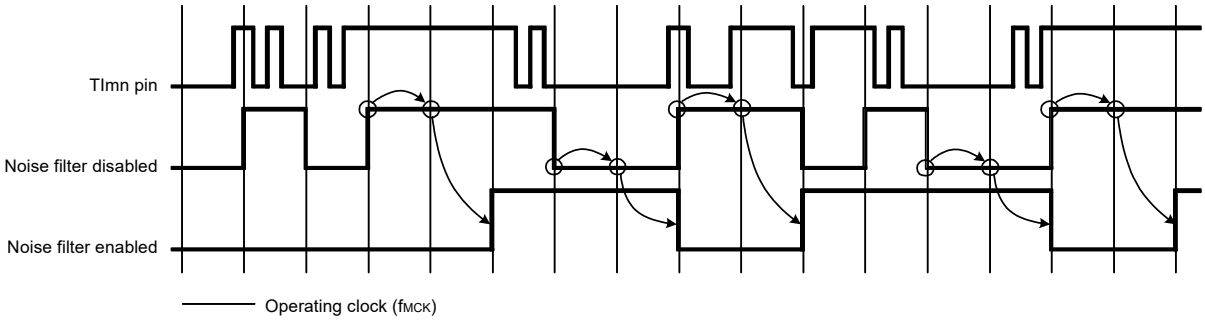

Caution **The input waveforms to the TImn pin are shown to explain the operation when the noise filter is enabled or disabled. When actually inputting waveforms, input them according to the TImn input high-level and low-level widths listed in 37.4 or 38.4 AC Characteristics.**

6.7.3 Cautions on channel input operation

When a timer input pin is set as unused, the operating clock is not supplied to the noise filter. Therefore, after settings are made to use the timer input pin, the following wait time is necessary before a trigger is specified to enable operation of the channel corresponding to the timer input pin.

(1) Noise filter is disabled
When bits 12 (CCSmn), 9 (STSmn1), and 8 (STSmn0) in the timer mode register mn (TMRmn) are 0 and then one of them is set to 1, wait for at least two cycles of the operating clock (f_{MCK}), and then set the operation enable trigger bit in the timer channel start register (TSm).

(2) Noise filter is enabled
When bits 12 (CCSmn), 9 (STSmn1), and 8 (STSmn0) in the timer mode register mn (TMRmn) are all 0 and then one of them is set to 1, wait for at least four cycles of the operating clock (f_{MCK}), and then set the operation enable trigger bit in the timer channel start register (TSm).

6.8 Independent Channel Operation Function of Timer Array Unit

6.8.1 Operation as interval timer/square wave output

(1) Interval timer

The timer array unit can be used as a reference timer that generates INTTMmn (timer interrupt) at fixed intervals.

The interrupt generation period can be calculated by the following expression.

Generation period of INTTMmn (timer interrupt) = Period of count clock × (Set value of TDRmn + 1)

(2) Operation as square wave output

TOmn performs a toggle operation as soon as INTTMmn has been generated, and outputs a square wave with a duty factor of 50%.

The period and frequency for outputting a square wave from TOmn can be calculated by the following expressions.

• Period of square wave output from TOmn = Period of count clock × (Set value of TDRmn + 1) × 2
• Frequency of square wave output from TOmn = Frequency of count clock/{(Set value of TDRmn + 1) × 2}

Timer count register mn (TCRmn) operates as a down counter in the interval timer mode.

The TCRmn register loads the value of timer data register mn (TDRmn) at the first count clock after the channel start trigger bit (TSmn, TSHm1, TSHm3) of timer channel start register m (TSm) is set to 1. If the MDmn0 bit of timer mode register mn (TMRmn) is 0 at this time, INTTMmn is not output and TOmn is not toggled. If the MDmn0 bit of the TMRmn register is 1, INTTMmn is output and TOmn is toggled.

After that, the TCRmn register count down in synchronization with the count clock.

When TCRmn = 0000H, INTTMmn is output and TOmn is toggled at the next count clock. At the same time, the TCRmn register loads the value of the TDRmn register again. After that, the same operation is repeated.

The TDRmn register can be rewritten at any time. The new value of the TDRmn register becomes valid from the next period.

Remark m: Unit number (m = 0), n: Channel number (n = 0 to 3)

Figure 6 - 45 Block Diagram of Operation as Interval Timer/Square Wave Output

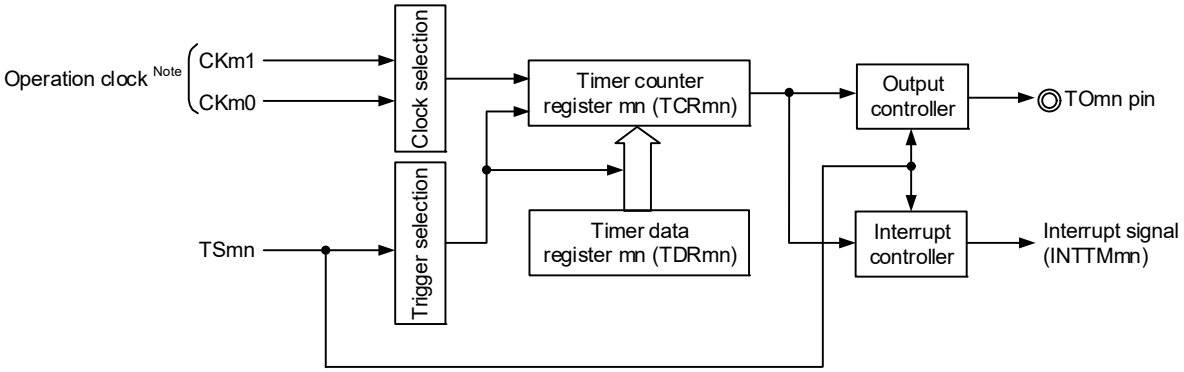

Note When channels 1 and 3, the clock can be selected from CKm0, CKm1, CKm2 and CKm3.

Figure 6 - 46 Example of Basic Timing of Operation as Interval Timer/Square Wave Output (MDmn0 = 1)

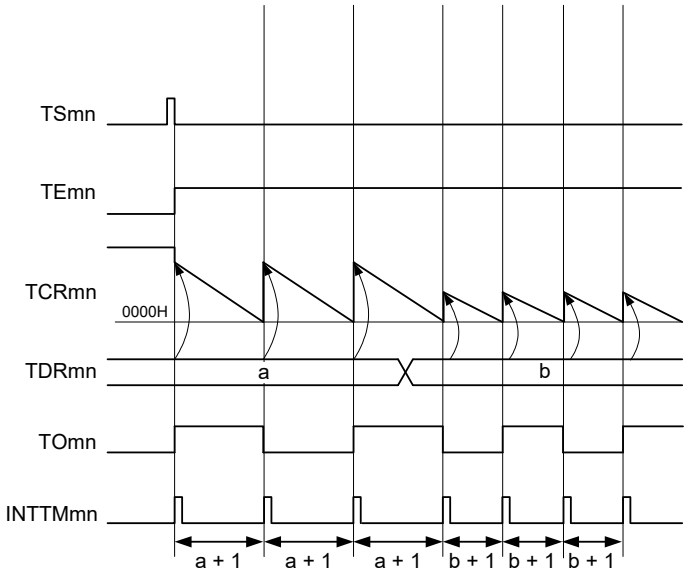

Remark 1. m: Unit number (m = 0), n: Channel number (n = 0 to 3)

Remark 2. TSmn: Bit n of timer channel start register m (TSm)
TEmn: Bit n of timer channel enable status register m (TEm)
TCRmn: Timer count register mn (TCRmn)
TDRmn: Timer data register mn (TDRmn)
TOmn: TOmn pin output signal

Figure 6 - 47 Example of Set Contents of Registers During Operation as Interval Timer/Square Wave Output (1/2)

(a) Timer mode register mn (TMRmn)

	15	14	13	12	11	10	9	8	7	6	5	4	3	2	1	0
TMRmn	CKSmn1	CKSmn0		CCSmn	M/S Note	STSmn2	STSmn1	STSmn0	CISmn1	CISmn0			MDmn3	MDmn2	MDmn1	MDmn0
	1/0	1/0	0	0	0/1	0	0	0	0	0	0	0	0	0	0	1/0

Operation mode of channel n
000B: Interval timer

Setting of operation when counting is started
0: Neither generates INTTMmn nor inverts timer output when counting is started.
1: Generates INTTMmn and inverts timer output when counting is started.

Selection of TImn pin input edge
00B: Sets 00B because these are not used.

Start trigger selection
000B: Selects only software start.

Setting of MASTERmn bit (channel 2)
0: Independent channel operation function.
Setting of SPLITmn bit (channels 1, 3)
0: 16-bit timer mode
1: 8-bit timer mode

Count clock selection
0: Selects operation clock (f_{MCK}).

Operation clock (f_{MCK}) selection
00B: Selects CKm0 as operation clock of channel n.
10B: Selects CKm1 as operation clock of channel n.
01B: Selects CKm2 as operation clock of channel 1, 3 (This can only be selected using channels 1 and 3 in the 8-bit timer mode).
11B: Selects CKm3 as operation clock of channel 1, 3 (This can only be selected using channels 1 and 3 in the 8-bit timer mode).

(b) Timer output register m (TOm)

	Bit n
TOm	TOmn
	1/0

0: Outputs 0 from TOmn.
1: Outputs 1 from TOmn.

(c) Timer output enable register m (TOEm)

	Bit n
TOEm	TOEmn
	1/0

0: Stops the TOmn output operation by counting operation.
1: Enables the TOmn output operation by counting operation.

(d) Timer output level register m (TOLm)

	Bit n
TOLm	TOLmn
	0

0: Cleared to 0 when TOMmn = 0 (master channel output mode)

(e) Timer output mode register m (TOMm)

	Bit n
TOMm	TOMmn
	0

0: Sets master channel output mode.

Note TMRm2: MASTERmn bit
TMRm1, TMRm3: SPLITmn bit
TMRm0: Fixed to 0

Remark m: Unit number (m = 0), n: Channel number (n = 0 to 3)

Figure 6 - 48 Operation Procedure of Interval Timer/Square Wave Output Function (1/2)

	Software Operation	Hardware Status
TAU default setting		Input clock supply for timer array unit m is stopped (Clock supply is stopped and writing to each register is disabled.)
	Sets the TAUmEN bit of peripheral enable register 0 (PER0) to 1. →	Input clock supply for timer array unit m is supplied (Clock supply is started and writing to each register is enabled.)
	Sets timer clock select register m (TPSm). Determines clock frequencies of CKm0 to CKm3.	
Channel default setting	Sets timer mode register mn (TMRmn) (determines operation mode of channel). Sets interval (period) value to timer data register mn (TDRmn).	Channel stops operating. (Clock is supplied and some power is consumed.)
	To use the TOmn output Clears the TOMmn bit of timer output mode register m (TOMm) to 0 (master channel output mode). Clears the TOLmn bit to 0. Sets the TOmn bit and determines default level of the TOmn output. →	The TOmn pin goes into Hi-Z output state. The TOmn default setting level is output when the port mode register is in the output mode and the port register is 0.
	Sets the TOEmn bit to 1 and enables operation of TOmn. →	TOmn does not change because channel stops operating.
	Clears the port register and port mode register to 0. →	The TOmn pin outputs the TOmn set level.
Operation start	(Sets the TOEmn bit to 1 only if using TOmn output and resuming operation.). Sets the TSmn (TSHm1, TSHm3) bit to 1. → The TSmn (TSHm1, TSHm3) bit automatically returns to 0 because it is a trigger bit.	TEmn (TEHm1, TEHm3) = 1, and count operation starts. Value of the TDRmn register is loaded to timer count register mn (TCRmn). INTTMmn is generated and TOmn performs toggle operation if the MDmn0 bit of the TMRmn register is 1.
During operation	Set value of the TDRmn register can be changed. The TCRmn register can always be read. The TSRmn register is not used. Set values of the TOm and TOEm registers can be changed. Set values of the TMRmn register, TOMmn, and TOLmn bits cannot be changed.	Counter (TCRmn) counts down. When count value reaches 0000H, the value of the TDRmn register is loaded to the TCRmn register again and the count operation is continued. By detecting TCRmn = 0000H, INTTMmn is generated and TOmn performs toggle operation. After that, the above operation is repeated.
Operation stop	The TTmn (TTHm1, TTHm3) bit is set to 1. → The TTmn (TTHm1, TTHm3) bit automatically returns to 0 because it is a trigger bit.	TEmn (TEHm1, TEHm3), and count operation stops. The TCRmn register holds count value and stops. The TOmn output is not initialized but holds current status.
	The TOEmn bit is cleared to 0 and value is set to the TOmn bit. →	The TOmn pin outputs the TOmn bit set level.

Operation is resumed.

(**Remark** is listed on the next page.)

Figure 6 - 49 Operation Procedure of Interval Timer/Square Wave Output Function (2/2)

	Software Operation	Hardware Status
TAU stop	To hold the TOmn pin output level Clears the TOmn bit to 0 after the value to be held is set to the port register. →	The TOmn pin output level is held by port function.
	When holding the TOmn pin output level is not necessary Setting not required.	
	The TAUmEN bit of the PER0 register is cleared to 0. →	Input clock supply for timer array unit m is stopped All circuits are initialized and SFR of each channel is also initialized. (The TOmn bit is cleared to 0 and the TOmn pin is set to port mode.)

Remark m: Unit number (m = 0), n: Channel number (n = 0 to 3)

6.8.2 Operation as external event counter

The timer array unit can be used as an external event counter that counts the number of times the valid input edge (external event) is detected in the TImn pin. When a specified count value is reached, the event counter generates an interrupt. The specified number of counts can be calculated by the following expression.

Specified number of counts = Set value of TDRmn + 1

Timer count register mn (TCRmn) operates as a down counter in the event counter mode.
The TCRmn register loads the value of timer data register mn (TDRmn) by setting any channel start trigger bit (TSmn, TSHm1, TSHm3) of timer channel start register m (TSm) to 1.
The TCRmn register counts down each time the valid input edge of the TImn pin has been detected. When TCRmn = 0000H, the TCRmn register loads the value of the TDRmn register again, and outputs INTTMmn.
After that, the above operation is repeated.
An irregular waveform that depends on external events is output from the TOmn pin. Stop the output by setting the TOEmn bit of timer output enable register m (TOEm) to 0.
The TDRmn register can be rewritten at any time. The new value of the TDRmn register becomes valid during the next count period.

Figure 6 - 50 Block Diagram of Operation as External Event Counter

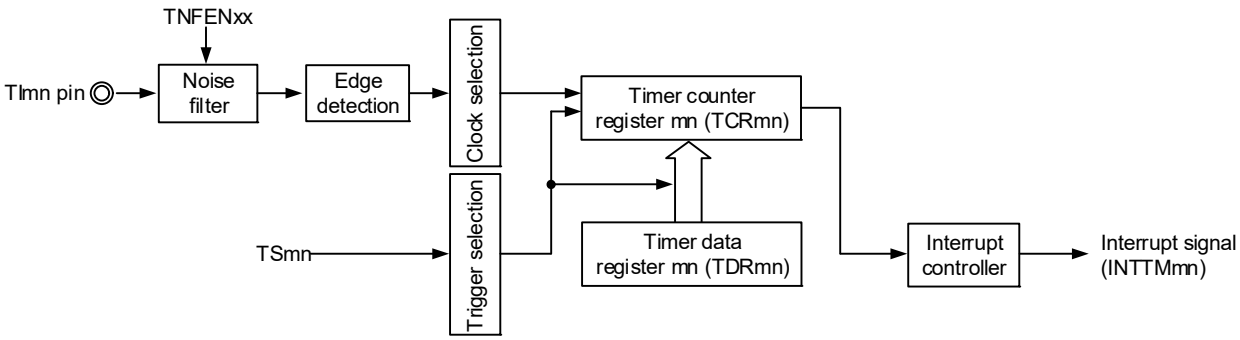

Remark m: Unit number (m = 0), n: Channel number (n = 0 to 3)

Figure 6 - 51 Example of Basic Timing of Operation as External Event Counter

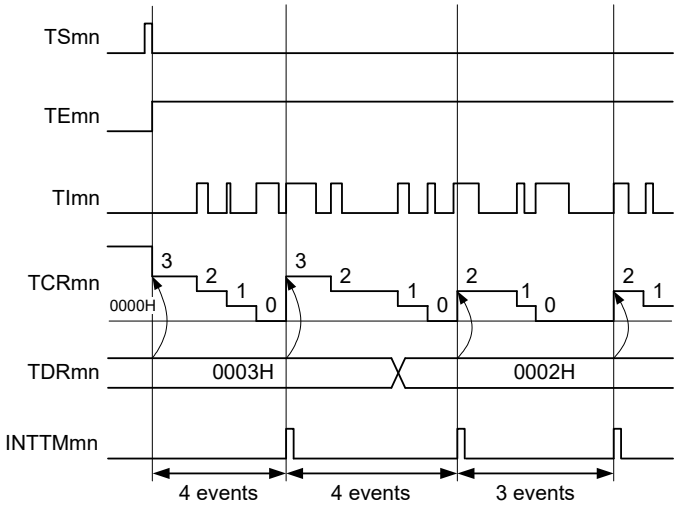

Remark 1. m: Unit number (m = 0), n: Channel number (n = 0 to 3)

Remark 2. TSmn: Bit n of timer channel start register m (TSm)
TEmn: Bit n of timer channel enable status register m (TEm)
TImn: TImn pin input signal
TCRmn: Timer count register mn (TCRmn)
TDRmn: Timer data register mn (TDRmn)

Figure 6 - 52 Example of Set Contents of Registers in External Event Counter Mode (1/2)

(a) Timer mode register mn (TMRmn)

	15	14	13	12	11	10	9	8	7	6	5	4	3	2	1	0
TMRmn	CKSmn1	CKSmn0		CCSmn	M/S Note	STSmn2	STSmn1	STSmn0	CISmn1	CISmn0			MDmn3	MDmn2	MDmn1	MDmn0
	1/0	1/0	0	1	0/1	0	0	0	1/0	1/0	0	0	0	1	1	0

Operation mode of channel n
011B Event count mode

Setting of operation when counting is started
0: Neither generates INTTMmn nor inverts timer output when counting is started.

Selection of TImn pin input edge
00B: Detects falling edge.
01B: Detects rising edge.
10B: Detects both edges.
11B: Setting prohibited

Start trigger selection
000B: Selects only software start.

Setting of MASTERmn bit (channel 2)
0: Independent channel operation function.
Setting of SPLITmn bit (channels 1, 3)
0: 16-bit timer mode
1: 8-bit timer mode

Count clock selection
1: Selects the TImn pin input valid edge.

Operation clock (f_{MCK}) selection
00B: Selects CKm0 as operation clock of channel n.
10B: Selects CKm1 as operation clock of channel n.
01B: Selects CKm2 as operation clock of channels 1, 3 (This can only be selected using channels 1 and 3 in the 8-bit timer mode).
11B: Selects CKm3 as operation clock of channels 1, 3 (This can only be selected using channels 1 and 3 in the 8-bit timer mode).

(b) Timer output register m (TOm)

	Bit n
TOm	TOmn
	0

0: Outputs 0 from TOmn

(c) Timer output enable register m (TOEm)

	Bit n
TOEm	TOEmn
	0

0: Stops the TOmn output operation by counting operation.

(d) Timer output level register m (TOLm)

	Bit n
TOLm	TOLmn
	0

0: Cleared to 0 when TOMmn = 0 (master channel output mode).

(e) Timer output mode register m (TOMm)

	Bit n
TOMm	TOMmn
	0

0: Sets master channel output mode.

Note

TMRm2:	MASTERmn bit
TMRm1, TMRm3	SPLITmn bit
TMRm0:	Fixed to 0

Remark m: Unit number (m = 0), n: Channel number (n = 0 to 3)

Figure 6 - 53 Operation Procedure When External Event Counter Function Is Used

	Software Operation	Hardware Status
TAU default setting		Input clock supply for timer array unit m is stopped (Clock supply is stopped and writing to each register is disabled.)
	Sets the TAUmEN bit of peripheral enable register 0 (PER0) to 1. →	Input clock supply for timer array unit m is supplied. Each channel stops operating. (Clock supply is started and writing to each register is enabled.)
	Sets timer clock select register m (TPSm). Determines clock frequencies of CKm0 to CKm3.	
Channel default setting	Sets the corresponding bit of noise filter enable register 1 (NFEN1) to 0 (off) or 1 (on). Sets timer mode register mn (TMRmn) (determines operation mode of channel). Sets number of counts to timer data register mn (TDRmn). Clears the TOEmn bit of timer output enable register m (TOEm) to 0.	Channel stops operating. (Clock is supplied and some power is consumed.)
Operation start	Sets the TSmn bit to 1. → The TSmn bit automatically returns to 0 because it is a trigger bit.	TEmn = 1, and count operation starts. Value of the TDRmn register is loaded to timer count register mn (TCRmn) and detection of the TImn pin input edge is awaited.
During operation	Set value of the TDRmn register can be changed. The TCRmn register can always be read. The TSRmn register is not used. Set values of the TMRmn register, TOMmn, TOLmn, TOmn, and TOEmn bits cannot be changed.	Counter (TCRmn) counts down each time input edge of the TImn pin has been detected. When count value reaches 0000H, the value of the TDRmn register is loaded to the TCRmn register again, and the count operation is continued. By detecting TCRmn = 0000H, the INTTMmn output is generated. After that, the above operation is repeated.
Operation stop	The TTmn bit is set to 1. → The TTmn bit automatically returns to 0 because it is a trigger bit.	TEmn = 0, and count operation stops. The TCRmn register holds count value and stops.
TAU stop	The TAUmEN bit of the PER0 register is cleared to 0. →	Input clock supply for timer array unit m is stopped All circuits are initialized and SFR of each channel is also initialized.

Operation is resumed.

Remark m: Unit number (m = 0), n: Channel number (n = 0 to 3)

6.8.3 Operation as frequency divider (channel 0 of unit 0 only)

The timer array unit can be used as a frequency divider that divides a clock input to the TI00 pin and outputs the result from the TO00 pin.

The divided clock frequency output from TO00 can be calculated by the following expression.

- When rising edge/falling edge is selected:
  Divided clock frequency = Input clock frequency/{(Set value of TDR00 + 1) × 2}
- When both edges are selected:
  Divided clock frequency ≅ Input clock frequency/(Set value of TDR00 + 1)

Timer count register 00 (TCR00) operates as a down counter in the interval timer mode.

After the channel start trigger bit (TS00) of timer channel start register 0 (TS0) is set to 1, the TCR00 register loads the value of timer data register 00 (TDR00) when the TI00 valid edge is detected.

If the MD000 bit of timer mode register 00 (TMR00) is 0 at this time, INTTM00 is not output and TO00 is not toggled. If the MD000 bit of timer mode register 00 (TMR00) is 1, INTTM00 is output and TO00 is toggled.

After that, the TCR00 register counts down at the valid edge of the TI00 pin. When TCR00 = 0000H, it toggles TO00. At the same time, the TCR00 register loads the value of the TDR00 register again, and continues counting.

If detection of both the edges of the TI00 pin is selected, the duty factor error of the input clock affects the divided clock period of the TO00 output.

The period of the TO00 output clock includes a sampling error of one period of the operation clock.

Clock period of TO00 output = Ideal TO00 output clock period ± Operation clock period (error)

The TDR00 register can be rewritten at any time. The new value of the TDR00 register becomes valid during the next count period.

Figure 6 - 54 Block Diagram of Operation as Frequency Divider

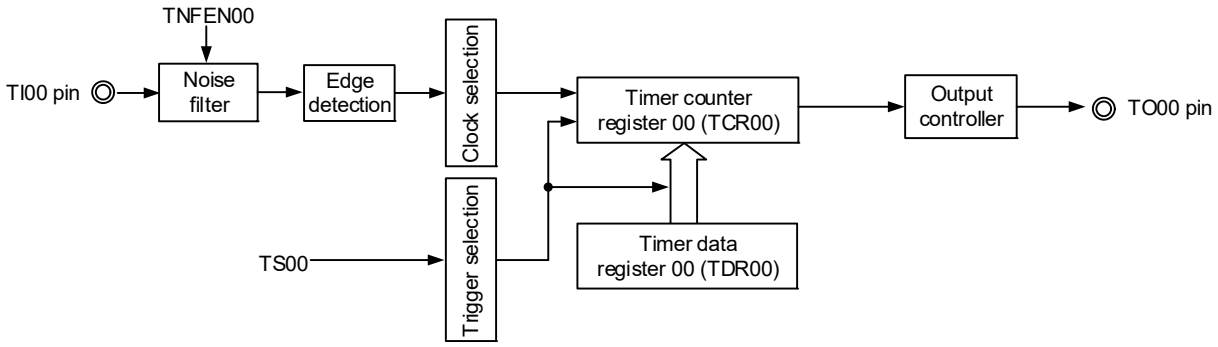

Figure 6 - 55 Example of Basic Timing of Operation as Frequency Divider (MD000 = 1)

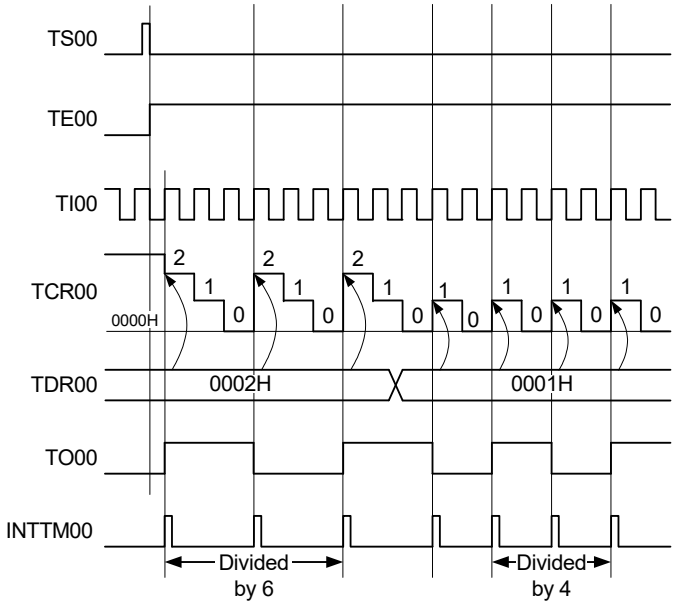

Remark TS00: Bit n of timer channel start register 0 (TS0)

TE00: Bit n of timer channel enable status register 0 (TE0)

TI00: TI00 pin input signal

TCR00: Timer count register 00 (TCR00)

TDR00: Timer data register 00 (TDR00)

TO00: TO00 pin output signal

Figure 6 - 56 Example of Set Contents of Registers During Operation as Frequency Divider

(a) Timer mode register 00 (TMR00)

	15	14	13	12	11	10	9	8	7	6	5	4	3	2	1	0
TMRm0	CKSmn1	CKSmn0		CCS00		STS002	STS001	STS000	CIS001	CIS000			MD003	MD002	MD001	MD000
	1/0	0	0	1	0	0	0	0	1/0	1/0	0	0	0	0	0	1/0

Operation mode of channel 0
000B: Interval timer

Setting of operation when counting is started
0: Neither generates INTTM00 nor inverts timer output when counting is started.
1: Generates INTTM00 and inverts timer output when counting is started.

Selection of TI00 pin input edge
00B: Detects falling edge.
01B: Detects rising edge.
10B: Detects both edges.
11B: Setting prohibited

Start trigger selection
000B: Selects only software start.

Count clock selection
1: Selects the TI00 pin input valid edge.

Operation clock (f_{MCK}) selection
00B: Selects CK00 as operation clock of channel 0.
10B: Selects CK01 as operation clock of channel 0.

(b) Timer output register 0 (TO0)

	Bit 0
TO0	TOmn
	0

0: Outputs 0 from TO00.
1: Outputs 1 from TO00.

(c) Timer output enable register 0 (TOE0)

	Bit n
TOE0	TOEmn
	0

0: Stops the TO00 output operation by counting operation.
1: Enables the TO00 output operation by counting operation.

(d) Timer output level register 0 (TOL0)

	Bit 0
TOL0	TOLmn
	0

0: Cleared to 0 when master channel output mode (TOM00 = 0)

(e) Timer output mode register 0 (TOM0)

	Bit 0
TOM0	TOMmn
	0

0: Sets master channel output mode.

Figure 6 - 57 Operation Procedure When Frequency Divider Function Is Used

	Software Operation	Hardware Status
TAU default setting		Input clock supply for timer array unit 0 is stopped (Clock supply is stopped and writing to each register is disabled.)
	Sets the TAU0EN bit of peripheral enable register 0 (PER0) to 1. →	Input clock supply for timer array unit 0 is supplied. Each channel stops operating. (Clock supply is started and writing to each register is enabled.)
	Sets timer clock select register 0 (TPS0). Determines clock frequencies of CKm0 to CKm3.	
Channel default setting	Sets the corresponding bit of noise filter enable register 1 (NFEN1) to 0 (off) or 1 (on). Sets timer mode register 00 (TMR00) (determines operation mode of channel and selects the detection edge). Sets interval (period) value to timer data register 00 (TDR00).	Channel stops operating. (Clock is supplied and some power is consumed.)
	Clears the TOM00 bit of timer output mode register 0 (TOM0) to 0 (master channel output mode). Clears the TOL00 bit to 0. Sets the TO00 bit and determines default level of the TO00 output. →	The TO00 pin goes into Hi-Z output state. The TO00 default setting level is output when the port mode register is in output mode and the port register is 0.
	Sets the TOE00 bit to 1 and enables operation of TO00. →	TO00 does not change because channel stops operating.
	Clears the port register and port mode register to 0. →	The TO00 pin outputs the TO00 set level.
Operation start	Sets the TOE00 bit to 1 (only when operation is resumed). →	TE00 = 1, and count operation starts.
	Sets the TS00 bit to 1. The TS00 bit automatically returns to 0 because it is a trigger bit.	Value of the TDR00 register is loaded to timer count register 00 (TCR00). INTTM00 is generated and TO00 performs toggle operation if the MD000 bit of the TMR00 register is 1.
During operation	Set value of the TDR00 register can be changed. The TCR00 register can always be read. The TSR00 register is not used. Set values of the TO0 and TOE0 registers can be changed. Set values of the TMR00 register, TOM00, and TOL00 bits cannot be changed.	Counter (TCR00) counts down. When count value reaches 0000H, the value of the TDR00 register is loaded to the TCR00 register again, and the count operation is continued. By detecting TCR00 = 0000H, INTTM00 is generated and TO00 performs toggle operation. After that, the above operation is repeated.
Operation stop	The TT00 bit is set to 1. →	TE00 = 0, and count operation stops.
	The TT00 bit automatically returns to 0 because it is a trigger bit.	The TCR00 register holds count value and stops. The TO00 output is not initialized but holds current status.
	The TOE00 bit is cleared to 0 and value is set to the TO00 bit. →	The TO00 pin outputs the TO00 set level.
TAU stop	To hold the TO00 pin output level Clears the TO00 bit to 0 after the value to be held is set to the port register. →	The TO00 pin output level is held by port function.
	When holding the TO00 pin output level is not necessary Setting not required.	
	The TAU0EN bit of the PER0 register is cleared to 0. →	Input clock supply for timer array unit 0 is stopped All circuits are initialized and SFR of each channel is also initialized. (The TO00 bit is cleared to 0 and the TO00 pin is set to port mode).

Operation is resumed.

6.8.4 Operation as input pulse interval measurement

The count value can be captured at the TImn valid edge and the interval of the pulse input to TImn can be measured. In addition, the count value can be captured by using software operation (TSmn = 1) as a capture trigger while the TEmn bit is set to 1.
The pulse interval can be calculated by the following expression.

TImn input pulse interval = Period of count clock × ((10000H × TSRmn: OVF) + (Capture value of TDRmn + 1))

Caution The TImn pin input is sampled using the operating clock selected with the CKSmn bit of timer mode register mn (TMRmn), so an error of up to one operating clock cycle occurs.

Timer count register mn (TCRmn) operates as an up counter in the capture mode.
When the channel start trigger bit (TSmn) of timer channel start register m (TSm) is set to 1, the TCRmn register counts up from 0000H in synchronization with the count clock.
When the TImn pin input valid edge is detected, the count value of the TCRmn register is transferred (captured) to timer data register mn (TDRmn) and, at the same time, the TCRmn register is cleared to 0000H, and the INTTMmn is output. If the counter overflows at this time, the OVF bit of timer status register mn (TSRmn) is set to 1. If the counter does not overflow, the OVF bit is cleared. After that, the above operation is repeated.
As soon as the count value has been captured to the TDRmn register, the OVF bit of the TSRmn register is updated depending on whether the counter overflows during the measurement period. Therefore, the overflow status of the captured value can be checked.
If the counter reaches a full count for two or more periods, it is judged to be an overflow occurrence, and the OVF bit of the TSRmn register is set to 1. However, a normal interval value cannot be measured for the OVF bit, if two or more overflows occur.
Set the STSmn2 to STSmn0 bits of the TMRmn register to 001B to use the valid edges of TImn as a start trigger and a capture trigger.

Figure 6 - 58 Block Diagram of Operation as Input Pulse Interval Measurement

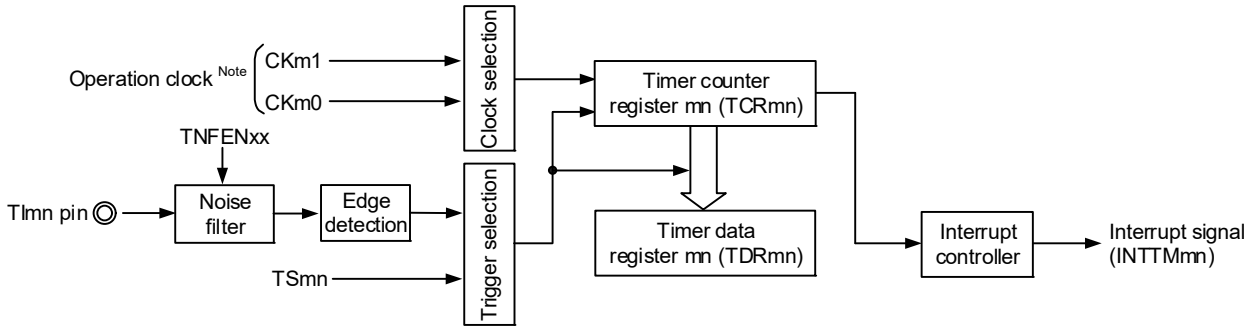

Note When channels 1 and 3, the clock can be selected from CKm0, CKm1, CKm2 and CKm3.

Remark m: Unit number (m = 0), n: Channel number (n = 0 to 3)

Figure 6 - 59 Example of Basic Timing of Operation as Input Pulse Interval Measurement (MDmn0 = 0)

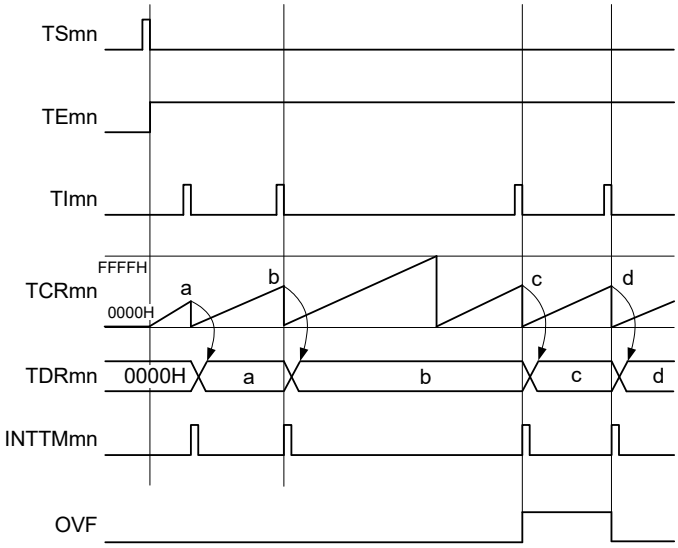

Remark 1. m: Unit number (m = 0), n: Channel number (n = 0 to 3)

Remark 2. TSmn: Bit n of timer channel start register m (TSm)
TEmn: Bit n of timer channel enable status register m (TEm)
TImn: TImn pin input signal
TCRmn: Timer count register mn (TCRmn)
TDRmn: Timer data register mn (TDRmn)
OVF: Bit 0 of timer status register mn (TSRmn)

Figure 6 - 60 Example of Set Contents of Registers to Measure Input Pulse Interval

(a) Timer mode register mn (TMRmn)

	15	14	13	12	11	10	9	8	7	6	5	4	3	2	1	0
TMRmn	CKSmn1	CKSmn0		CCSmn	M/S Note	STSmn2	STSmn1	STSmn0	CISmn1	CISmn0			MDmn3	MDmn2	MDmn1	MDmn0
	1/0	0	0	0	0	0	0	1	1/0	1/0	0	0	0	1	0	1/0

Operation mode of channel n
010B: Capture mode

Setting of operation when counting is started
0: Does not generate INTTMmn when counting is started.
1: Generates INTTMmn when counting is started.

Selection of TImn pin input edge
00B: Detects falling edge.
01B: Detects rising edge.
10B: Detects both edges.
11B: Setting prohibited

Capture trigger selection
001B: Selects the TImn pin input valid edge.

Setting of MASTERmn bit (channel 2)
0: Independent channel operation function.
Setting of SPLITmn bit (channels 1, 3)
0: 16-bit timer mode

Count clock selection
0: Selects operation clock (f_{MCK}).

Operation clock (f_{MCK}) selection
00B: Selects CKm0 as operation clock of channel n.
10B: Selects CKm1 as operation clock of channel n.
01B: Selects CKm2 as operation clock of channels 1, 3 (This can only be selected channels 1 and 3).
11B: Selects CKm3 as operation clock of channels 1, 3 (This can only be selected channels 1 and 3).

(b) Timer output register m (TOm)

	Bit n
TOm	TOmn 0

0: Outputs 0 from TOmn.

(c) Timer output enable register m (TOEm)

	Bit n
TOEm	TOEmn 0

0: Stops TOmn output operation by counting operation.

(d) Timer output level register m (TOLm)

	Bit n
TOLm	TOLmn 0

0: Cleared to 0 when master channel output mode (TOMmn = 0)

(e) Timer output mode register m (TOMm)

	Bit n
TOMm	TOMmn 0

0: Sets master channel output mode.

Note TMRm2: MASTERmn bit
TMRm1, TMRm3: SPLITmn bit
TMRm0: Fixed to 0

Remark m: Unit number (m = 0), n: Channel number (n = 0 to 3)

Figure 6 - 61 Operation Procedure When Input Pulse Interval Measurement Function Is Used

	Software Operation	Hardware Status
TAU default setting		Input clock supply for timer array unit m is stopped (Clock supply is stopped and writing to each register is disabled.)
	Sets the TAUmEN bit of peripheral enable register 0 (PER0) to 1. →	Input clock supply for timer array unit m is supplied. Each channel stops operating. (Clock supply is started and writing to each register is enabled.)
	Sets timer clock select register m (TPSm). Determines clock frequencies of CKm0 to CKm3.	
Channel default setting	Sets the corresponding bit of noise filter enable register 1 (NFEN1) to 0 (off) or 1 (on). Sets timer mode register mn (TMRmn) (determines operation mode of channel).	Channel stops operating. (Clock is supplied and some power is consumed.)
Operation start	Sets TSmn bit to 1. → The TSmn bit automatically returns to 0 because it is a trigger bit.	TEmn = 1, and count operation starts. Timer count register mn (TCRmn) is cleared to 0000H. When the MDmn0 bit of the TMRmn register is 1, INTTMmn is generated.
During operation	Set values of only the CISmn1 and CISmn0 bits of the TMRmn register can be changed. The TDRmn register can always be read. The TCRmn register can always be read. The TSRmn register can always be read. Set values of the TOMmn, TOLmn, TOmn, and TOEmn bits cannot be changed.	Counter (TCRmn) counts up from 0000H. When the valid edge of the TImn pin input is detected or the TSmn bit is set to 1, the count value is transferred (captured) to timer data register mn (TDRmn). At the same time, the TCRmn register is cleared to 0000H, and the INTTMmn signal is generated. If an overflow occurs at this time, the OVF bit of timer status register mn (TSRmn) is set; if an overflow does not occur, the OVF bit is cleared. After that, the above operation is repeated.
Operation stop	The TTmn bit is set to 1. → The TTmn bit automatically returns to 0 because it is a trigger bit.	TEmn = 0, and count operation stops. The TCRmn register holds count value and stops. The OVF bit of the TSRmn register is also held.
TAU stop	The TAUmEN bit of the PER0 register is cleared to 0. →	Input clock supply for timer array unit m is stopped All circuits are initialized and SFR of each channel is also initialized.

Operation is resumed.

Remark m: Unit number (m = 0), n: Channel number (n = 0 to 3)

6.8.5 Operation as input signal high-/low-level width measurement

Caution When using a channel to implement the LIN-bus, set bit 1 (ISC1) of the input switch control register (ISC) to 1. In the following descriptions, read TImn as RxD0.

By starting counting at one edge of the TImn pin input and capturing the number of counts at another edge, the signal width (high-level width/low-level width) of TImn can be measured. The signal width of TImn can be calculated by the following expression.

Signal width of TImn input = Period of count clock × ((10000H × TSRmn: OVF) + (Capture value of TDRmn + 1))

Caution The TImn pin input is sampled using the operating clock selected with the CKSmn bit of timer mode register mn (TMRmn), so an error equivalent to one operation clock occurs.

Timer count register mn (TCRmn) operates as an up counter in the capture & one-count mode.
When the channel start trigger bit (TSmn) of timer channel start register m (TSm) is set to 1, the TEmn bit is set to 1 and the TImn pin start edge detection wait status is set.
When the TImn pin input start edge (rising edge of the TImn pin input when the high-level width is to be measured) is detected, the counter counts up from 0000H in synchronization with the count clock. When the valid capture edge (falling edge of the TImn pin input when the high-level width is to be measured) is detected later, the count value is transferred to timer data register mn (TDRmn) and, at the same time, INTTMmn is output. If the counter overflows at this time, the OVF bit of timer status register mn (TSRmn) is set to 1. If the counter does not overflow, the OVF bit is cleared. The TCRmn register stops at the value “value transferred to the TDRmn register + 1”, and the TImn pin start edge detection wait status is set. After that, the above operation is repeated.
As soon as the count value has been captured to the TDRmn register, the OVF bit of the TSRmn register is updated depending on whether the counter overflows during the measurement period. Therefore, the overflow status of the captured value can be checked.
If the counter reaches a full count for two or more periods, it is judged to be an overflow occurrence, and the OVF bit of the TSRmn register is set to 1. However, a normal interval value cannot be measured for the OVF bit, if two or more overflows occur.
Whether the high-level width or low-level width of the TImn pin is to be measured can be selected by using the CISmn1 and CISmn0 bits of the TMRmn register.
Because this function is used to measure the signal width of the TImn pin input, the TSmn bit cannot be set to 1 while the TEmn bit is 1.

CISmn1, CISmn0 of TMRmn register = 10B: Low-level width is measured.
CISmn1, CISmn0 of TMRmn register = 11B: High-level width is measured.

Figure 6 - 62 Block Diagram of Operation as Input Signal High-/Low-Level Width Measurement

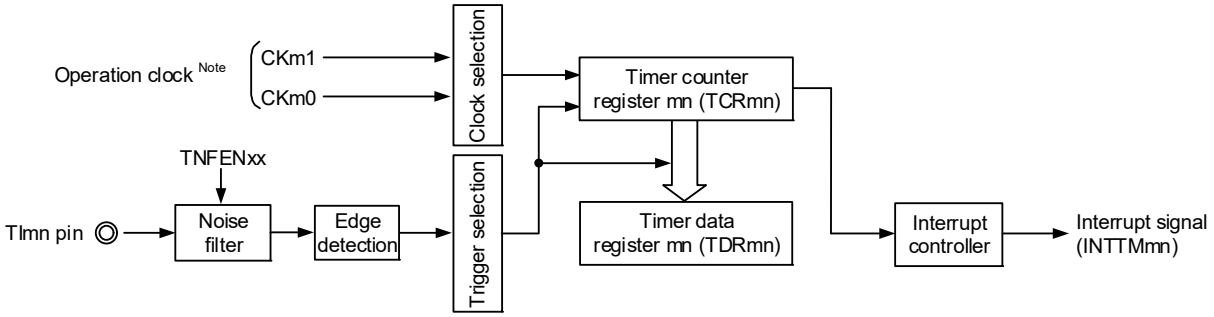

Note For channels 1 and 3, the clock can be selected from CKm0, CKm1, CKm2 and CKm3.

Figure 6 - 63 Example of Basic Timing of Operation as Input Signal High-/Low-Level Width Measurement

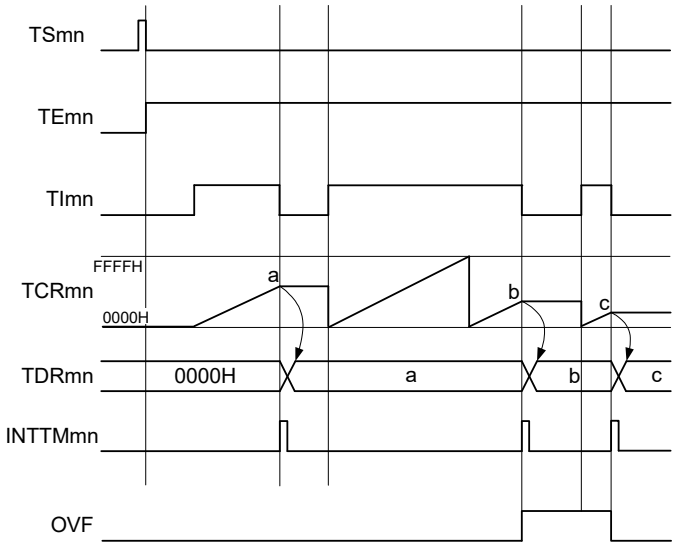

Remark 1. m: Unit number (m = 0), n: Channel number (n = 0 to 3)

Remark 2. TSmn: Bit n of timer channel start register m (TSm)
TEmn: Bit n of timer channel enable status register m (TEm)
TImn: TImn pin input signal
TCRmn: Timer count register mn (TCRmn)
TDRmn: Timer data register mn (TDRmn)
OVF: Bit 0 of timer status register mn (TSRmn)

Figure 6 - 64 Example of Set Contents of Registers to Measure Input Signal High-/Low-Level Width

(a) Timer mode register mn (TMRmn)

	15	14	13	12	11	10	9	8	7	6	5	4	3	2	1	0
TMRmn	CKSmn1	CKSmn0		CCSmn	M/S Note	STSmn2	STSmn1	STSmn0	CISmn1	CISmn0			MDmn3	MDmn2	MDmn1	MDmn0
	1/0	0	0	0	0	0	1	0	1	1/0	0	0	1	1	0	0

Operation mode of channel n
110B: Capture & one-count

Setting of operation when counting is started
0: Does not generate INTTMmn when counting is started.

Selection of TImn pin input edge
10B: Both edges (to measure low-level width)
11B: Both edges (to measure high-level width)

Start trigger selection
010B: Selects the TImn pin input valid edge.

Setting of MASTERmn bit (channel 2)
0: Independent channel operation function.
Setting of SPLITmn bit (channels 1, 3)
0: 16-bit timer mode

Count clock selection
0: Selects operation clock (f_{MCK}).

Operation clock (f_{MCK}) selection
00B: Selects CKm0 as operation clock of channel n.
10B: Selects CKm1 as operation clock of channel n.
01B: Selects CKm2 as operation clock of channels 1, 3 (This can only be selected channels 1 and 3).
11B: Selects CKm3 as operation clock of channels 1, 3 (This can only be selected channels 1 and 3).

(b) Timer output register m (TOm)

	Bit n
TOm	TOmn
	0

0: Outputs 0 from TOmn.

(c) Timer output enable register m (TOEm)

	Bit n
TOEm	TOEmn
	0

0: Stops the TOmn output operation by counting operation.

(d) Timer output level register m (TOLm)

	Bit n
TOLm	TOLmn
	0

0: Cleared to 0 when master channel output mode (TOMmn = 0)

(e) Timer output mode register m (TOMm)

	Bit n
TOMm	TOMmn
	0

0: Sets master channel output mode.

Note TMRm2: MASTERmn bit
TMRm1, TMRm3: SPLITmn bit
TMRm0: Fixed to 0

Remark m: Unit number (m = 0), n: Channel number (n = 0 to 3)

Figure 6 - 65 Operation Procedure When Input Signal High-/Low-Level Width Measurement Function Is Used

	Software Operation	Hardware Status
TAU default setting		Input clock supply for timer array unit m is stopped (Clock supply is stopped and writing to each register is disabled.)
	Sets the TAUmEN bit of peripheral enable register 0 (PER0) to 1. →	Input clock supply for timer array unit m is supplied. Each channel stops operating. (Clock supply is started and writing to each register is enabled.)
	Sets timer clock select register m (TPSm). Determines clock frequencies of CKm0 to CKm3.	
Channel default setting	Sets the corresponding bit of noise filter enable register 1 (NFEN1) to 0 (off) or 1 (on). Sets timer mode register mn (TMRmn) (determines operation mode of channel). Clears the TOEmn bit to 0 and stops operation of TOmn.	Channel stops operating. (Clock is supplied and some power is consumed.)
Operation start	Sets the TSmn bit to 1. → The TSmn bit automatically returns to 0 because it is a trigger bit.	TEmn = 1, and the TImn pin start edge detection wait status is set.
	Detects the TImn pin input count start valid edge. →	Clears timer count register mn (TCRmn) to 0000H and starts counting up.
During operation	Set value of the TDRmn register can be changed. The TCRmn register can always be read. The TSRmn register is not used. Set values of the TMRmn register, TOMmn, TOLmn, TOmn, and TOEmn bits cannot be changed.	When the TImn pin start edge is detected, the counter (TCRmn) counts up from 0000H. If a capture edge of the TImn pin is detected, the count value is transferred to timer data register mn (TDRmn) and INTTMmn is generated. If an overflow occurs at this time, the OVF bit of timer status register mn (TSRmn) is set; if an overflow does not occur, the OVF bit is cleared. The TCRmn register stops the count operation until the next TImn pin start edge is detected.
Operation stop	The TTmn bit is set to 1. → The TTmn bit automatically returns to 0 because it is a trigger bit.	TEmn = 0, and count operation stops. The TCRmn register holds count value and stops. The OVF bit of the TSRmn register is also held.
TAU stop	The TAUmEN bit of the PER0 register is cleared to 0. →	Input clock supply for timer array unit m is stopped All circuits are initialized and SFR of each channel is also initialized.

Operation is resumed.

Remark m: Unit number (m = 0), n: Channel number (n = 0 to 3)

6.8.6 Operation as delay counter

It is possible to start counting down when the valid edge of the TImn pin input is detected (an external event), and then generate INTTMmn (a timer interrupt) after any specified interval.
It can also generate INTTMmn (timer interrupt) at any interval by making a software set TSmn = 1 and the count down start during the period of TEmn = 1.
The interrupt generation period can be calculated by the following expression.

Generation period of INTTMmn (timer interrupt) = Period of count clock × (Set value of TDRmn + 1)

Timer count register mn (TCRmn) operates as a down counter in the one-count mode.
When the channel start trigger bit (TSmn, TSHm1, TSHm3) of timer channel start register m (TSm) is set to 1, the TEmn, TEHm1, TEHm3 bits are set to 1 and the TImn pin input valid edge detection wait status is set.
Timer count register mn (TCRmn) starts operating upon TImn pin input valid edge detection and loads the value of timer data register mn (TDRmn). The TCRmn register counts down from the value of the TDRmn register it has loaded, in synchronization with the count clock. When TCRmn = 0000H, it outputs INTTMmn and stops counting until the next TImn pin input valid edge is detected.
The TDRmn register can be rewritten at any time. The new value of the TDRmn register becomes valid from the next period.

Figure 6 - 66 Block Diagram of Operation as Delay Counter

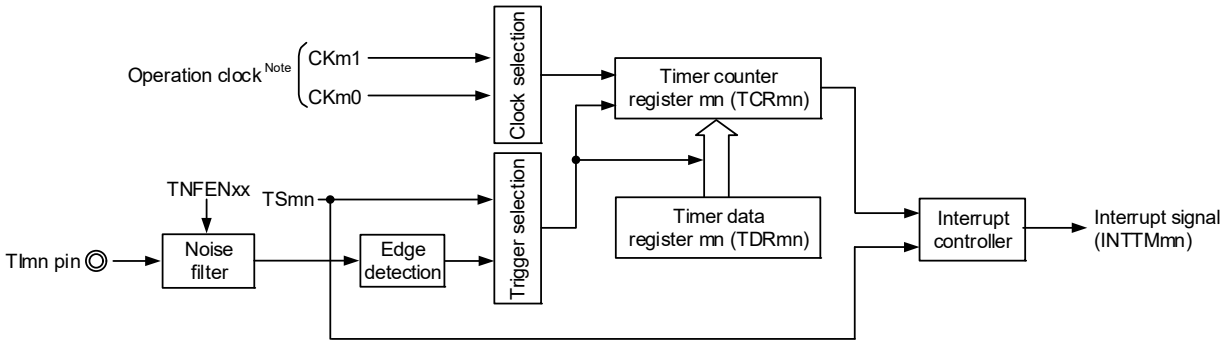

Note For using channels 1 and 3, the clock can be selected from CKm0, CKm1, CKm2 and CKm3.

Remark m: Unit number (m = 0), n: Channel number (n = 0 to 3)

Figure 6 - 67 Example of Basic Timing of Operation as Delay Counter

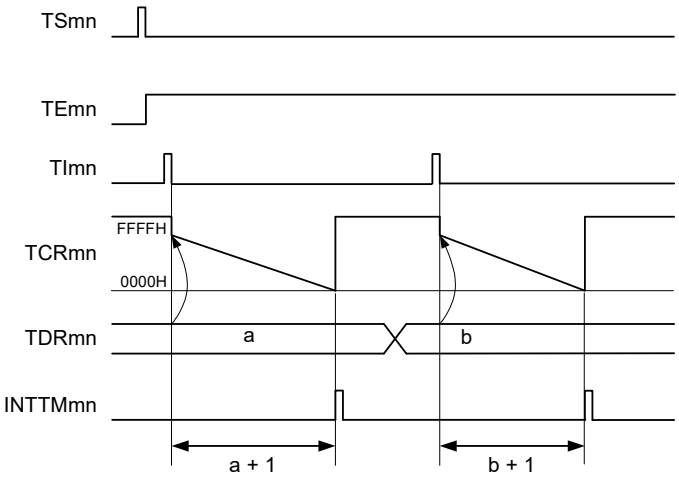

Remark 1. m: Unit number (m = 0), n: Channel number (n = 0 to 3)

Remark 2. TSmn: Bit n of timer channel start register m (TSm)
TEmn: Bit n of timer channel enable status register m (TEm)
TImn: TImn pin input signal
TCRmn: Timer count register mn (TCRmn)
TDRmn: Timer data register mn (TDRmn)

Figure 6 - 68 Example of Set Contents of Registers to Delay Counter

(a) Timer mode register mn (TMRmn)

	15	14	13	12	11	10	9	8	7	6	5	4	3	2	1	0
TMRmn	CKSmn1	CKSmn0		CCSmn	M/S Note	STSmn2	STSmn1	STSmn0	CISmn1	CISmn0			MDmn3	MDmn2	MDmn1	MDmn0
	1/0	1/0	0	0	0/1	0	0	1	1/0	1/0	0	0	1	0	0	1/0

Operation mode of channel n
100B: One-count mode

Start trigger during operation
0: Trigger input is invalid.
1: Trigger input is valid.

Selection of TImn pin input edge
00B: Detects falling edge.
01B: Detects rising edge.
10B: Detects both edges.
11B: Setting prohibited

Start trigger selection
001B: Selects the TImn pin input valid edge.

Setting of MASTERmn bit (channel 2)
0: Independent channel operation function.
Setting of SPLITmn bit (channels 1, 3)
0: 16-bit timer mode
1: 8-bit timer mode

Count clock selection
0: Selects operation clock (f_{MCK}).

Operation clock (f_{MCK}) selection
00B: Selects CKm0 as operation clock of channel n.
10B: Selects CKm1 as operation clock of channel n.
01B: Selects CKm2 as operation clock of channels 1, 3 (This can only be selected using channels 1 and 3 in the 8-bit timer mode).
11B: Selects CKm3 as operation clock of channels 1, 3 (This can only be selected using channels 1 and 3 in the 8-bit timer mode).

(b) Timer output register m (TOm)

	Bit n
TOm	TOmn
	0

0: Outputs 0 from TOmn.

(c) Timer output enable register m (TOEm)

	Bit n
TOEm	TOEmn
	0

0: Stops the TOmn output operation by counting operation.

(d) Timer output level register m (TOLm)

	Bit n
TOLm	TOLmn
	0

0: Cleared to 0 when master channel output mode (TOMmn = 0)

(e) Timer output mode register m (TOMm)

	Bit n
TOMm	TOMmn
	0

0: Sets master channel output mode.

(f)

Note TMRm2: MASTERmn bit
TMRm1, TMRm3: SPLITmn bit
TMRm0: Fixed to 0

Remark m: Unit number (m = 0), n: Channel number (n = 0 to 3)

Figure 6 - 69 Operation Procedure When Delay Counter Function Is Used

	Software Operation	Hardware Status
TAU default setting		Input clock supply for timer array unit m is stopped (Clock supply is stopped and writing to each register is disabled.)
	Sets the TAUmEN bit of peripheral enable register 0 (PER0) to 1. →	Input clock supply for timer array unit m is supplied. Each channel stops operating. (Clock supply is started and writing to each register is enabled.)
	Sets timer clock select register m (TPSm). Determines clock frequencies of CKm0 to CKm3.	
Channel default setting	Sets the corresponding bit of noise filter enable register 1 (NFEN1) to 0 (off) or 1 (on). Sets timer mode register mn (TMRmn) (determines operation mode of channel). INTTMmn output delay is set to timer data register mn (TDRmn). Clears the TOEmn bit to 0 and stops operation of TOmn.	Channel stops operating. (Clock is supplied and some power is consumed.)
Operation start	Sets the TSmn bit to 1. → The TSmn bit automatically returns to 0 because it is a trigger bit.	TEmn = 1, and the start trigger detection (the valid edge of the TImn pin input is detected or the TSmn bit is set to 1) wait status is set.
	The counter starts counting down by the next start trigger detection. • Detects the TImn pin input valid edge. • Sets the TSmn bit to 1 by the software. →	Value of the TDRmn register is loaded to the timer count register mn (TCRmn).
During operation	Set value of the TDRmn register can be changed. The TCRmn register can always be read. The TSRmn register is not used.	The counter (TCRmn) counts down. When the count value of TCRmn reaches 0000H, the INTTMmn output is generated, and the count operation stops until the next start trigger detection (the valid edge of the TImn pin input is detected or the TSmn bit is set to 1).
Operation stop	The TTmn bit is set to 1. → The TTmn bit automatically returns to 0 because it is a trigger bit.	TEmn = 0, and count operation stops. The TCRmn register holds count value and stops.
TAU stop	The TAUmEN bit of the PER0 register is cleared to 0. →	Input clock supply for timer array unit m is stopped All circuits are initialized and SFR of each channel is also initialized.

Operation is resumed.

Remark m: Unit number (m = 0), n: Channel number (n = 0 to 3)

6.9 Simultaneous Channel Operation Function of Timer Array Unit

6.9.1 Operation as one-shot pulse output function

By using two channels as a set, a one-shot pulse having any delay pulse width can be generated from the signal input to the TImn pin.
The delay time and pulse width can be calculated by the following expressions.

Delay time = {Set value of TDRmn (master) + 2} × Count clock period
Pulse width = {Set value of TDRmp (slave)} × Count clock period

The master channel operates in the one-count mode and counts the delays. Timer count register mn (TCRmn) of the master channel starts operating upon start trigger detection and loads the value of timer data register mn (TDRmn).
The TCRmn register counts down from the value of the TDRmn register it has loaded, in synchronization with the count clock. When TCRmn = 0000H, it outputs INTTMmn and stops counting until the next start trigger is detected.
The slave channel operates in the one-count mode and counts the pulse width. The TCRmp register of the slave channel starts operation using INTTMmn of the master channel as a start trigger, and loads the value of the TDRmp register. The TCRmp register counts down from the value of The TDRmp register it has loaded, in synchronization with the count value. When count value = 0000H, it outputs INTTMmp and stops counting until the next start trigger (INTTMmn of the master channel) is detected. The output level of TOmp becomes active one count clock after generation of INTTMmn from the master channel, and inactive when TCRmp = 0000H.
Instead of using the TImn pin input, a one-shot pulse can also be output using the software operation (TSmn = 1) as a start trigger.

Caution **The timing of loading of the TDRmn register of the master channel is different from that of the TDRmp register of the slave channel. If the TDRmn and TDRmp registers are rewritten during counting, therefore, an illegal waveform may be output in conflict with the timing of loading. Rewrite the TDRmn register after INTTMmn is generated and the TDRmp register after INTTMmp is generated.**

Remark m: Unit number (m = 0), n: Channel number (n = 0, 2)
p: Slave channel number (n = 0: p = 1, 2, 3, n = 2: p = 3)

Figure 6 - 70 Block Diagram of Operation as One-Shot Pulse Output Function

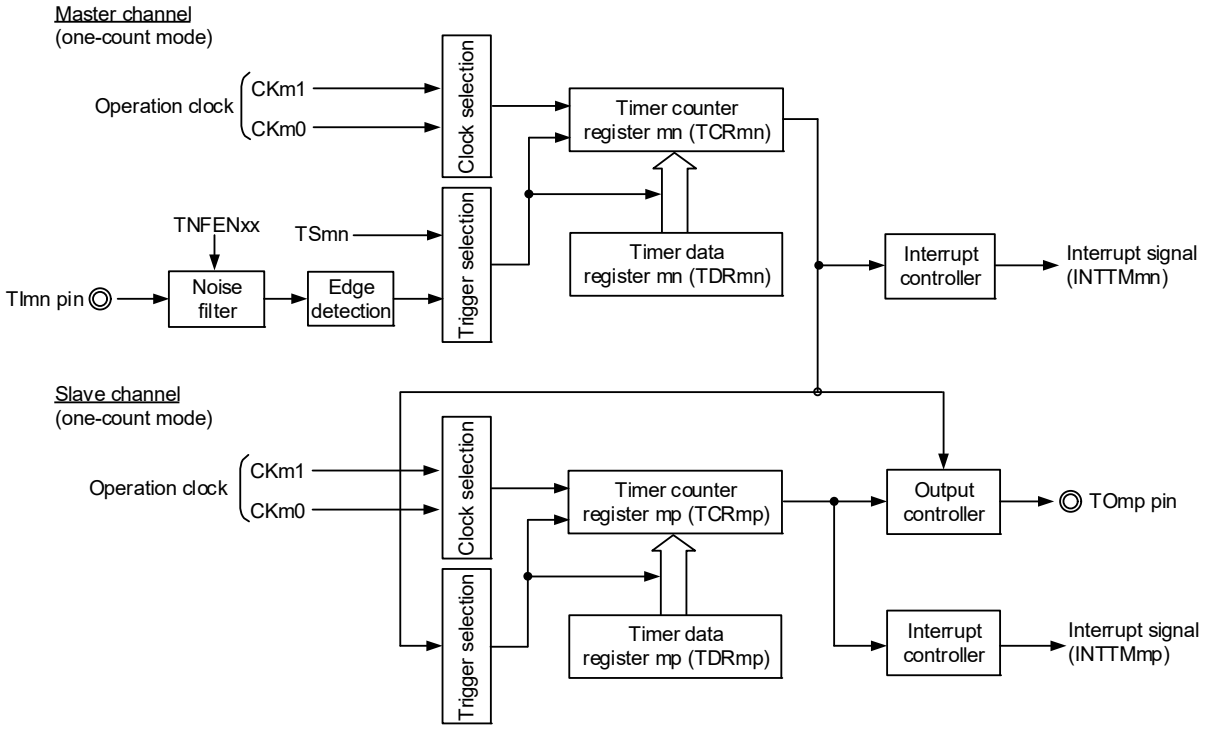

Remark m: Unit number (m = 0), n: Channel number (n = 0, 2)
p: Slave channel number (n = 0: p = 1, 2, 3, n = 2: p = 3)

Figure 6 - 71 Example of Basic Timing of Operation as One-Shot Pulse Output Function

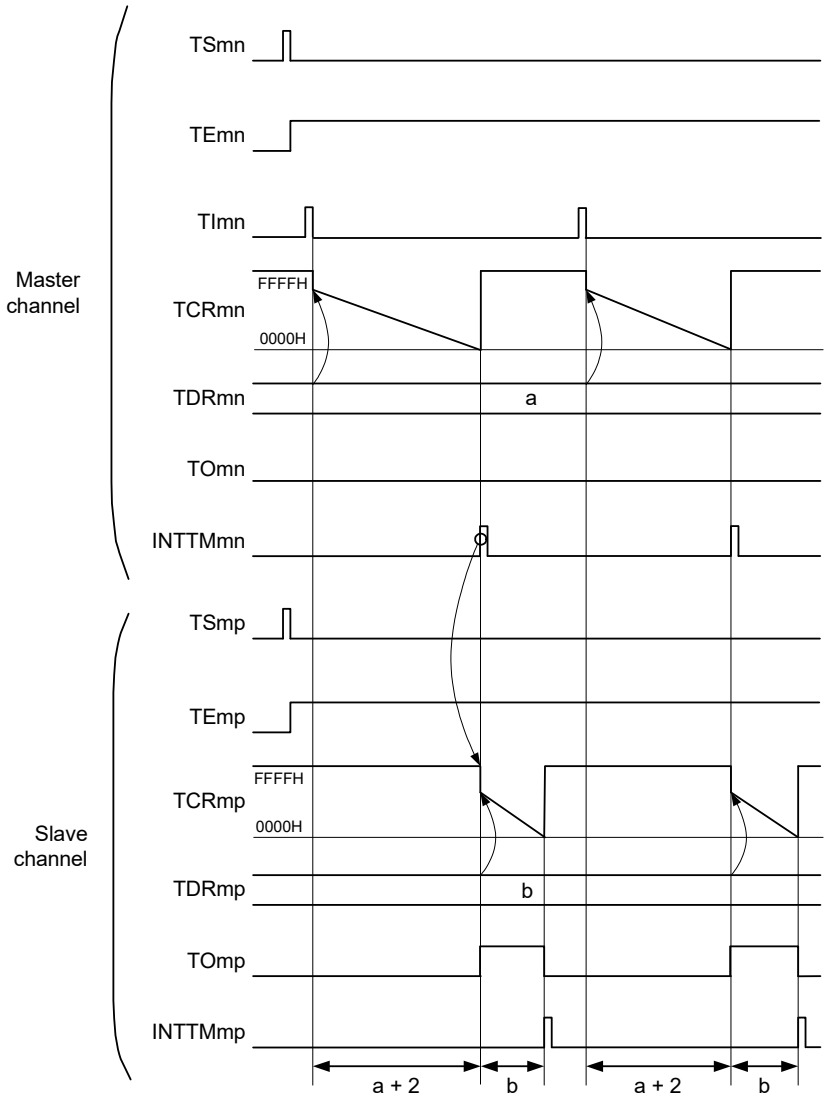

Remark 1. m: Unit number (m = 0), n: Channel number (n = 0, 2)
p: Slave channel number (n = 0: p = 1, 2, 3, n = 2: p = 3)

Remark 2. TSmn, TSmp: Bit n, p of timer channel start register m (TSm)
TEmn, TEmp: Bit n, p of timer channel enable status register m (TEm)
TImn, TImp: TImn and TImp pins input signal
TCRmn, TCRmp: Timer count registers mn, mp (TCRmn, TCRmp)
TDRmn, TDRmp: Timer data registers mn, mp (TDRmn, TDRmp)
TOmn, TOmp: TOmn and TOmp pins output signal

Figure 6 - 72 Example of Set Contents of Registers
When One-Shot Pulse Output Function Is Used (Master Channel)

(a) Timer mode register mn (TMRmn)

	15	14	13	12	11	10	9	8	7	6	5	4	3	2	1	0
TMRmn	CKSmn1 1/0	CKSmn0 0	0	CCSmn 0	MASTERmn Note 1	STSmn2 0	STSmn1 0	STSmn0 1	CISmn1 1/0	CISmn0 1/0	0	0	MDmn3 1	MDmn2 0	MDmn1 0	MDmn0 0

Operation mode of channel n
100B: One-count mode

Start trigger during operation
0: Trigger input is invalid.

Selection of TImn pin input edge
00B: Detects falling edge.
01B: Detects rising edge.
10B: Detects both edges.
11B: Setting prohibited

Start trigger selection
001B: Selects the TImn pin input valid edge.

Setting of the MASTERmn bit (channel 2)
1: Master channel.

Count clock selection
0: Selects operation clock (f_{MCK}).

Operation clock (f_{MCK}) selection
00B: Selects CKm0 as operation clock of channels n.
10B: Selects CKm1 as operation clock of channels n.

(b) Timer output register m (TOm)

	Bit n
TOm	TOmn 0

0: Outputs 0 from TOmn.

(c) Timer output enable register m (TOEm)

	Bit n
TOEm	TOEmn 0

0: Stops the TOmn output operation by counting operation.

(d) Timer output level register m (TOLm)

	Bit n
TOLm	TOLmn 0

0: Cleared to 0 when master channel output mode (TOMmn = 0)

(e) Timer output mode register m (TOMm)

	Bit n
TOMm	TOMmn 0

0: Sets master channel output mode.

Note TMRm2: MASTERmn = 1
TMRm0: Fixed to 0

Remark m: Unit number (m = 0), n: Channel number (n = 0, 2)

Figure 6 - 73 Example of Set Contents of Registers
When One-Shot Pulse Output Function Is Used (Slave Channel)

(a) Timer mode register mp (TMRmp)

	15	14	13	12	11	10	9	8	7	6	5	4	3	2	1	0
TMRmp	CKSmp1	CKSmp0		CCSmp	M/S Note	STSmp2	STSmp1	STSmp0	CISmp1	CISmp0			MDmp3	MDmp2	MDmp1	MDmp0
	1/0	0	0	0	0	1	0	0	0	0	0	0	1	0	0	0

Operation mode of channel p
100B: One-count mode

Start trigger during operation
0: Trigger input is invalid.

Selection of TImp pin input edge
00B: Sets 00B because these are not used.

Start trigger selection
100B: Selects INTTMmn of master channel.

Setting of MASTERmn bit (channel 2)
0: Slave channel
Setting of SPLITmp bit (channels 1, 3)
0: 16-bit timer mode

Count clock selection
0: Selects operation clock (f_{MCK}).

Operation clock (f_{MCK}) selection
00B: Selects CKm0 as operation clock of channel p.
10B: Selects CKm1 as operation clock of channel p.
* Make the same setting as master channel.

(b) Timer output register m (TOm)

	Bit p
TOm	TOmp 1/0

0: Outputs 0 from TOmp.
1: Outputs 1 from TOmp.

(c) Timer output enable register m (TOEm)

	Bit p
TOEm	TOEmp 1/0

0: Stops the TOmp output operation by counting operation.
1: Enables the TOmp output operation by counting operation.

(d) Timer output level register m (TOLm)

	Bit p
TOLm	TOLmp 1/0

0: Positive logic output (active-high)
1: Negative logic output (active-low)

(e) Timer output mode register m (TOMm)

	Bit p
TOMm	TOMmp 1

1: Sets the slave channel output mode.

Note TMRm2: MASTERmp bit
TMRm1, TMRm3: SPLITmp bit

Remark m: Unit number (m = 0), n: Channel number (n = 0, 2)
p: Slave channel number (n = 0: p = 1, 2, 3, n = 2: p = 3)

Figure 6 - 74 Operation Procedure of One-Shot Pulse Output Function (1/2)

	Software Operation	Hardware Status
TAU default setting		Input clock supply for timer array unit m is stopped (Clock supply is stopped and writing to each register is disabled.)
	Sets the TAUmEN bit of peripheral enable registers 0 (PER0) to 1. →	Input clock supply for timer array unit m is supplied. Each channel stops operating. (Clock supply is started and writing to each register is enabled.)
	Sets timer clock select register m (TPSm). Determines clock frequencies of CKm0 and CKm1.	
Channel default setting	Sets the corresponding bit of noise filter enable register 1 (NFEN1) to 1. Sets timer mode register mn, mp (TMRmn, TMRmp) of two channels to be used (determines operation mode of channels). An output delay is set to timer data register mn (TDRmn) of the master channel, and a pulse width is set to the TDRmp register of the slave channel.	Channel stops operating. (Clock is supplied and some power is consumed.)
	Sets slave channel. The TOMmp bit of timer output mode register m (TOMm) is set to 1 (slave channel output mode). Sets the TOLmp bit. Sets the TOmp bit and determines default level of the TOmp output. →	The TOmp pin goes into Hi-Z output state. The TOmp default setting level is output when the port mode register is in output mode and the port register is 0.
	Sets the TOEmp bit to 1 and enables operation of TOmp. →	TOmp does not change because channel stops operating.
	Clears the port register and port mode register to 0. →	The TOmp pin outputs the TOmp set level.

(**Note** and **Remark** are listed on the next page.)

Figure 6 - 75 Operation Procedure of One-Shot Pulse Output Function (2/2)

Operation is resumed.

	Software Operation	Hardware Status
Operation start	Sets the TOEmp bit (slave) to 1 (only when operation is resumed). The TSmn (master) and TSmp (slave) bits of timer channel start register m (TSm) are set to 1 at the same time. →	The TEmn and TEmp bits are set to 1 and the master channel enters the start trigger detection (the valid edge of the TImn pin input is detected or the TSmn bit of the master channel is set to 1) wait status. Counter stops operating.
	The TSmn and TSmp bits automatically return to 0 because they are trigger bits.	
	Count operation of the master channel is started by start trigger detection of the master channel. • Detects the TImn pin input valid edge. • Sets the TSmn bit of the master channel to 1 by software Note.	Master channel starts counting.
During operation	Set values of only the CISmn1 and CISmn0 bits of the TMRmn register can be changed. Set values of the TMRmp, TDRmn, TDRmp registers, TOMmn, TOMmp, TOLmn, and TOLmp bits cannot be changed. The TCRmn and TCRmp registers can always be read. The TSRmn and TSRmp registers are not used. Set values of the TOm and TOEm registers by slave channel can be changed.	Master channel loads the value of the TDRmn register to timer count register mn (TCRmn) by the start trigger detection (the valid edge of the TImn pin input is detected or the TSmn bit of the master channel is set to 1), and the counter starts counting down. When the count value reaches TCRmn = 0000H, the INTTMmn output is generated, and the counter stops until the next valid edge is input to the TImn pin. The slave channel, triggered by INTTMmn of the master channel, loads the value of the TDRmp register to the TCRmp register, and the counter starts counting down. The output level of TOmp becomes active one count clock after generation of INTTMmn from the master channel. It becomes inactive when TCRmp = 0000H, and the counting operation is stopped. After that, the above operation is repeated.
Operation stop	The TTmn (master) and TTmp (slave) bits are set to 1 at the same time. →	TEmn, TEmp = 0, and count operation stops. The TCRmn and TCRmp registers hold count value and stop. The TOmp output is not initialized but holds current status.
	The TOEmp bit of slave channel is cleared to 0 and value is set to the TOmp bit. →	The TOmp pin outputs the TOmp set level.
TAU stop	To hold the TOmp pin output level Clears the TOmp bit to 0 after the value to be held is set to the port register. →	The TOmp pin output level is held by port function.
	When holding the TOmp pin output level is not necessary Setting not required.	
	The TAUmEN bit of the PER0 register is cleared to 0. →	Input clock supply for timer array unit m is stopped All circuits are initialized and SFR of each channel is also initialized. (The TOmp bit is cleared to 0 and the TOmp pin is set to port mode.)

Note Do not set the TSmn bit of the slave channel to 1.

Remark m: Unit number (m = 0), n: Channel number (n = 0, 2)
p: Slave channel number (n = 0: p = 1, 2, 3, n = 2: p = 3)

6.9.2 Operation as PWM function

Two channels can be used as a set to generate a pulse of any period and duty factor.
The period and duty factor of the output pulse can be calculated by the following expressions.

Pulse period = {Set value of TDRmn (master) + 1} × Count clock period
Duty factor [%] = {Set value of TDRmp (slave)}/{Set value of TDRmn (master) + 1} × 100
0% output: Set value of TDRmp (slave) = 0000H
100% output: Set value of TDRmp (slave) ≥ {Set value of TDRmn (master) + 1}

Remark The duty factor exceeds 100% if the set value of TDRmp (slave) > (set value of TDRmn (master) + 1), it summarizes to 100% output.

The master channel operates in the interval timer mode. If the channel start trigger bit (TSmn) of timer channel start register m (TSm) is set to 1, an interrupt (INTTMmn) is output, the value set to timer data register mn (TDRmn) is loaded to timer count register mn (TCRmn), and the counter counts down in synchronization with the count clock. When the counter reaches 0000H, INTTMmn is output, the value of the TDRmn register is loaded again to the TCRmn register, and the counter counts down. This operation is repeated until the channel stop trigger bit (TTmn) of timer channel stop register m (TTm) is set to 1.
If two channels are used to output a PWM waveform, the period until the master channel counts down to 0000H is the PWM output (TOmp) cycle.
The slave channel operates in one-count mode. By using INTTMmn from the master channel as a start trigger, the TCRmp register loads the value of the TDRmp register and the counter counts down to 0000H. When the counter reaches 0000H, it outputs INTTMmp and waits until the next start trigger (INTTMmn from the master channel) is generated.
If two channels are used to output a PWM waveform, the period until the slave channel counts down to 0000H is the PWM output (TOmp) duty.
PWM output (TOmp) goes to the active level one clock after the master channel generates INTTMmn and goes to the inactive level when the TCRmp register of the slave channel becomes 0000H.

Caution **To rewrite both timer data register mn (TDRmn) of the master channel and the TDRmp register of the slave channel, a write access is necessary two times. The timing at which the values of the TDRmn and TDRmp registers are loaded to the TCRmn and TCRmp registers is upon occurrence of INTTMmn of the master channel. Thus, when rewriting is performed split before and after occurrence of INTTMmn of the master channel, the TOmp pin cannot output the expected waveform. To rewrite both the TDRmn register of the master and the TDRmp register of the slave, therefore, be sure to rewrite both the registers immediately after INTTMmn is generated from the master channel.**

Remark m: Unit number (m = 0), n: Channel number (n = 0, 2)
p: Slave channel number (n = 0: p = 1, 2, 3, n = 2: p = 3)

Figure 6 - 76 Block Diagram of Operation as PWM Function

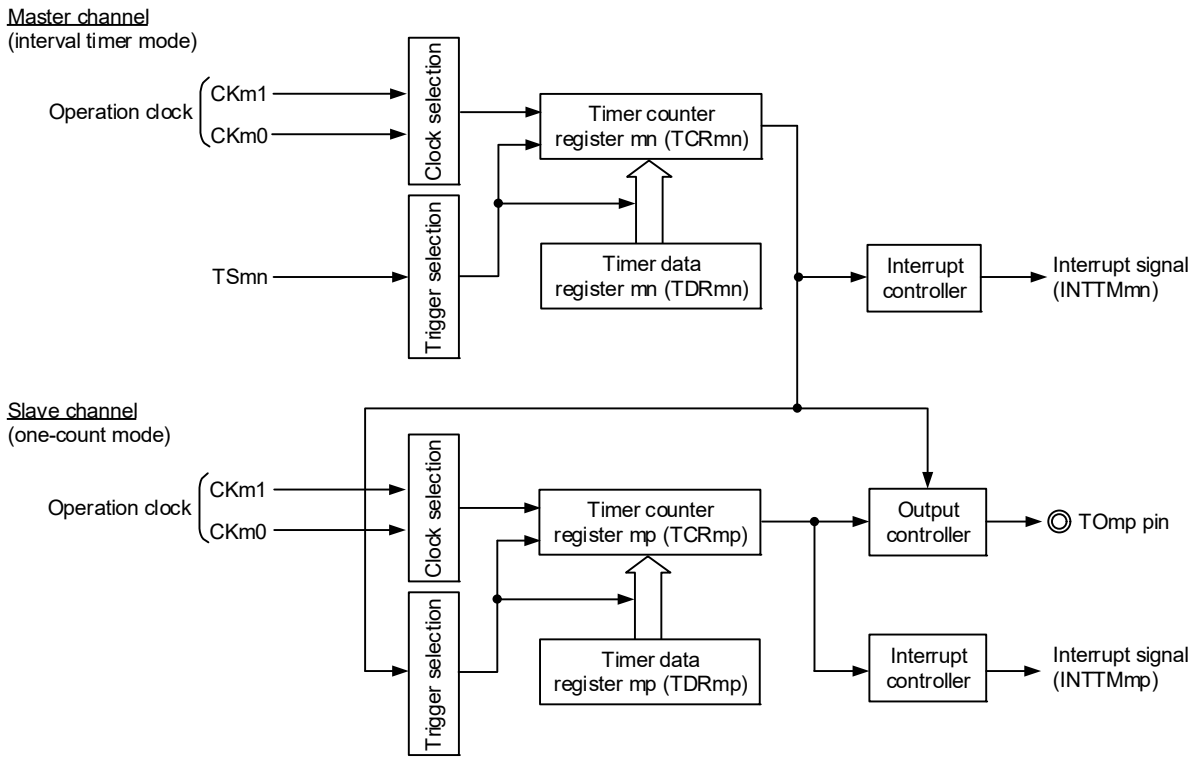

Remark m: Unit number (m = 0), n: Channel number (n = 0, 2)
p: Slave channel number (n = 0: p = 1, 2, 3, n = 2: p = 3)

Figure 6 - 77 Example of Basic Timing of Operation as PWM Function

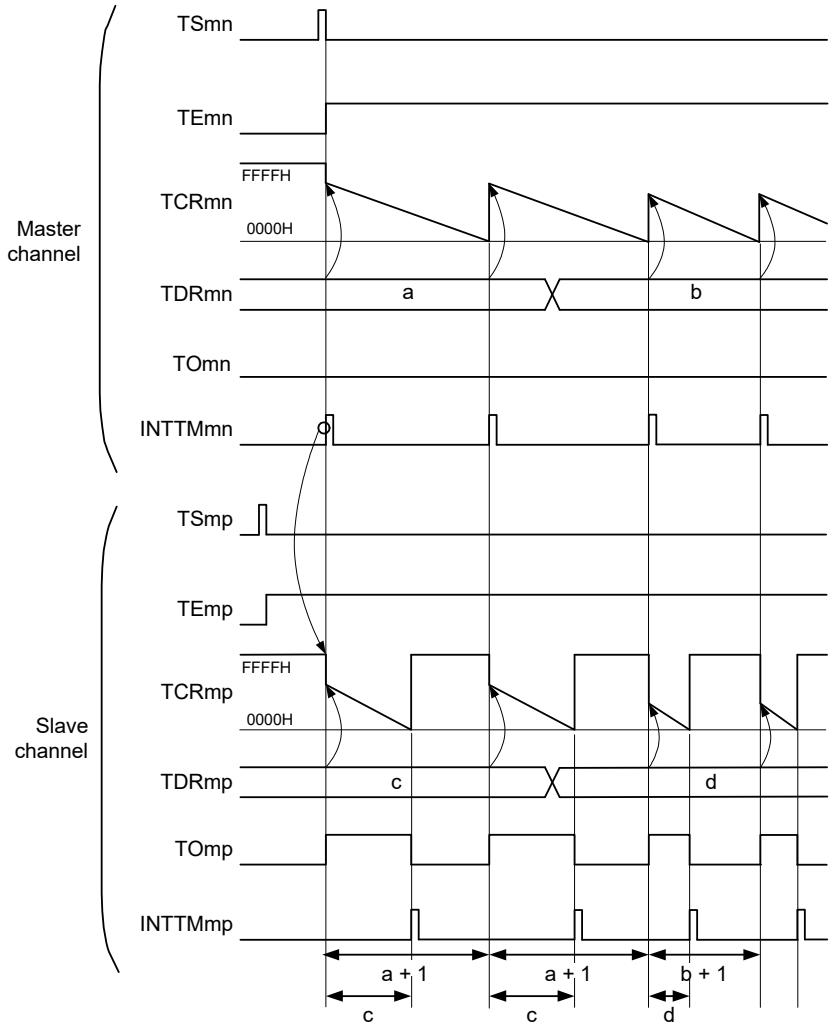

Remark 1. m: Unit number (m = 0), n: Channel number (n = 0, 2)
p: Slave channel number (n = 0: p = 1, 2, 3, n = 2: p = 3)

Remark 2. TSmn, TSmp: Bit n, p of timer channel start register m (TSm)
TEmn, TEmp: Bit n, p of timer channel enable status register m (TEm)
TCRmn, TCRmp: Timer count registers mn, mp (TCRmn, TCRmp)
TDRmn, TDRmp: Timer data registers mn, mp (TDRmn, TDRmp)
TOmn, TOmp: TOmn and TOmp pins output signal

Figure 6 - 78 Example of Set Contents of Registers When PWM Function (Master Channel) Is Used

(a) Timer mode register mn (TMRmn)

	15	14	13	12	11	10	9	8	7	6	5	4	3	2	1	0
TMRmn	CKSmn1 1/0	CKSmn0 0	0	CCSmn 0	MASTERmn Note 1	STSmn2 0	STSmn1 0	STSmn0 0	CISmn1 0	CISmn0 0	0	0	MDmn3 0	MDmn2 0	MDmn1 0	MDmn0 1

Operation mode of channel n
000B: Interval timer

Setting of operation when counting is started
1: Generates INTTMmn when counting is started.

Selection of TImn pin input edge
00B: Sets 00B because these are not used.

Start trigger selection
000B: Selects only software start.

Setting of the MASTERmn bit (channel 2)
1: Master channel.

Count clock selection
0: Selects operation clock (f_{MCK}).

Operation clock (f_{MCK}) selection
00B: Selects CKm0 as operation clock of channel n.
10B: Selects CKm1 as operation clock of channel n.

(b) Timer output register m (TOm)

	Bit n
TOm	TOmn 0

0: Outputs 0 from TOmn.

(c) Timer output enable register m (TOEm)

	Bit n
TOEm	TOEmn 0

0: Stops the TOmn output operation by counting operation.

(d) Timer output level register m (TOLm)

	Bit n
TOLm	TOLmn 0

0: Cleared to 0 when master channel output mode (TOMmn = 0)

(e) Timer output mode register m (TOMm)

	Bit n
TOMm	TOMmn 0

0: Sets master channel output mode.

Note TMRm2: MASTERmn = 1
TMRm0: Fixed to 0

Remark m: Unit number (m = 0), n: Channel number (n = 0, 2)

Figure 6 - 79 Example of Set Contents of Registers When PWM Function (Slave Channel) Is Used

(a) Timer mode register mp (TMRmp)

	15	14	13	12	11	10	9	8	7	6	5	4	3	2	1	0
TMRmp	CKSmp1	CKSmp0		CCSmp	M/S Note	STSmp2	STSmp1	STSmp0	CISmp1	CISmp0			MDmp3	MDmp2	MDmp1	MDmp0
	1/0	0	0	0	0	1	0	0	0	0	0	0	1	0	0	1

Operation mode of channel p
100B: One-count mode

Start trigger during operation
1: Trigger input is valid.

Selection of TImp pin input edge
00B: Sets 00B because these are not used.

Start trigger selection
100B: Selects INTTMmn of master channel.

Setting of MASTERmn bit (channel 2)
0: Slave channel
Setting of SPLITmp bit (channels 1, 3)
0: 16-bit timer mode

Count clock selection
0: Selects operation clock (f_{MCK}).

Operation clock (f_{MCK}) selection
00B: Selects CKm0 as operation clock of channel p.
10B: Selects CKm1 as operation clock of channel p.
* Make the same setting as master channel.

(b) Timer output register m (TOm)

	Bit p
TOm	TOmp 1/0

0: Outputs 0 from TOmp.
1: Outputs 1 from TOmp.

(c) Timer output enable register m (TOEm)

	Bit p
TOEm	TOEmp 1/0

0: Stops the TOmp output operation by counting operation.
1: Enables the TOmp output operation by counting operation.

(d) Timer output level register m (TOLm)

	Bit p
TOLm	TOLmp 1/0

0: Positive logic output (active-high)
1: Negative logic output (active-low)

(e) Timer output mode register m (TOMm)

	Bit p
TOMm	TOMmp 1

1: Sets the slave channel output mode.

Note TMRm2: MASTERmp bit
TMRm1, TMRm3: SPLITmp bit

Remark m: Unit number (m = 0), n: Channel number (n = 0, 2)
p: Slave channel number (n = 0: p = 1, 2, 3, n = 2: p = 3)

Figure 6 - 80 Operation Procedure When PWM Function Is Used (1/2)

	Software Operation	Hardware Status
TAU default setting		Input clock supply for timer array unit m is stopped (Clock supply is stopped and writing to each register is disabled.)
	Sets the TAUmEN bit of peripheral enable register 0 (PER0) to 1. →	Input clock supply for timer array unit m is supplied. Each channel stops operating. (Clock supply is started and writing to each register is enabled.)
	Sets timer clock select register m (TPSm). Determines clock frequencies of CKm0 and CKm1.	
Channel default setting	Sets timer mode registers mn, mp (TMRmn, TMRmp) of two channels to be used (determines operation mode of channels). An interval (period) value is set to timer data register mn (TDRmn) of the master channel, and a duty factor is set to the TDRmp register of the slave channel.	Channel stops operating. (Clock is supplied and some power is consumed.)
	Sets slave channel. The TOMmp bit of timer output mode register m (TOMm) is set to 1 (slave channel output mode). Sets the TOLmp bit. Sets the TOmp bit and determines default level of the TOmp output. →	The TOmp pin goes into Hi-Z output state. The TOmp default setting level is output when the port mode register is in output mode and the port register is 0.
	Sets the TOEmp bit to 1 and enables operation of TOmp. →	TOmp does not change because channel stops operating.
	Clears the port register and port mode register to 0. →	The TOmp pin outputs the TOmp set level.

(**Remark** is listed on the next page.)

Figure 6 - 81 Operation Procedure When PWM Function Is Used (2/2)

Operation is resumed.

	Software Operation	Hardware Status
Operation start	Sets the TOEmp bit (slave) to 1 (only when operation is resumed). The TSmn (master) and TSmp (slave) bits of timer channel start register m (TSm) are set to 1 at the same time. → The TSmn and TSmp bits automatically return to 0 because they are trigger bits.	TEmn = 1, TEmp = 1 → When the master channel starts counting, INTTMmn is generated. Triggered by this interrupt, the slave channel also starts counting.
During operation	Set values of the TMRmn and TMRmp registers, TOMmn, TOMmp, TOLmn, and TOLmp bits cannot be changed. Set values of the TDRmn and TDRmp registers can be changed after INTTMmn of the master channel is generated. The TCRmn and TCRmp registers can always be read. The TSRmn and TSRmp registers are not used.	The counter of the master channel loads the TDRmn register value to timer count register mn (TCRmn), and counts down. When the count value reaches TCRmn = 0000H, INTTMmn output is generated. At the same time, the value of the TDRmn register is loaded to the TCRmn register, and the counter starts counting down again. At the slave channel, the value of the TDRmp register is loaded to the TCRmp register, triggered by INTTMmn of the master channel, and the counter starts counting down. The output level of TOmp becomes active one count clock after generation of the INTTMmn output from the master channel. It becomes inactive when TCRmp = 0000H, and the counting operation is stopped. After that, the above operation is repeated.
Operation stop	The TTmn (master) and TTmp (slave) bits are set to 1 at the same time. → The TTmn and TTmp bits automatically return to 0 because they are trigger bits.	TEmn, TEmp = 0, and count operation stops. The TCRmn and TCRmp registers hold count value and stop. The TOmp output is not initialized but holds current status.
	The TOEmp bit of slave channel is cleared to 0 and value is set to the TOmp bit. →	The TOmp pin outputs the TOmp set level.
TAU stop	To hold the TOmp pin output level Clears the TOmp bit to 0 after the value to be held is set to the port register. → When holding the TOmp pin output level is not necessary Setting not required.	The TOmp pin output level is held by port function.
	The TAUmEN bit of the PER0 register is cleared to 0. →	Input clock supply for timer array unit m is stopped All circuits are initialized and SFR of each channel is also initialized. (The TOmp bit is cleared to 0 and the TOmp pin is set to port mode.)

Remark m: Unit number (m = 0), n: Channel number (n = 0, 2)
p: Slave channel number (n = 0: p = 1, 2, 3, n = 2: p = 3)

6.9.3 Operation as multiple PWM output function

By extending the PWM function and using multiple slave channels, many PWM waveforms with different duty values can be output.
For example, when using two slave channels, the period and duty factor of an output pulse can be calculated by the following expressions.

Pulse period = {Set value of TDRmn (master) + 1} × Count clock period
Duty factor 1 [%] = {Set value of TDRmp (slave 1)}/{Set value of TDRmn (master) + 1} × 100
Duty factor 2 [%] = {Set value of TDRmq (slave 2)}/{Set value of TDRmn (master) + 1} × 100

Remark Although the duty factor exceeds 100% if the set value of TDRmp (slave 1) > {set value of TDRmn (master) + 1} or if the {set value of TDRmq (slave 2)} > {set value of TDRmn (master) + 1}, it is summarized into 100% output.

Timer count register mn (TCRmn) of the master channel operates in the interval timer mode and counts the periods.
The TCRmp register of the slave channel 1 operates in one-count mode, counts the duty factor, and outputs a PWM waveform from the TOmp pin. The TCRmp register loads the value of timer data register mp (TDRmp), using INTTMmn of the master channel as a start trigger, and starts counting down. When TCRmp = 0000H, TCRmp outputs INTTMmp and stops counting until the next start trigger (INTTMmn of the master channel) has been input. The output level of TOmp becomes active one count clock after generation of INTTMmn from the master channel, and inactive when TCRmp = 0000H.
In the same way as the TCRmp register of the slave channel 1, the TCRmq register of the slave channel 2 operates in one-count mode, counts the duty factor, and outputs a PWM waveform from the TOmq pin. The TCRmq register loads the value of the TDRmq register, using INTTMmn of the master channel as a start trigger, and starts counting down. When TCRmq = 0000H, the TCRmq register outputs INTTMmq and stops counting until the next start trigger (INTTMmn of the master channel) has been input. The output level of TOmq becomes active one count clock after generation of INTTMmn from the master channel, and inactive when TCRmq = 0000H.
When channel 0 is used as the master channel as above, up to three types of PWM signals can be output at the same time.

Caution **To rewrite both timer data register mn (TDRmn) of the master channel and the TDRmp register of the slave channel 1, write access is necessary at least twice. Since the values of the TDRmn and TDRmp registers are loaded to the TCRmn and TCRmp registers after INTTMmn is generated from the master channel, if rewriting is performed separately before and after generation of INTTMmn from the master channel, the TOmp pin cannot output the expected waveform. To rewrite both the TDRmn register of the master and the TDRmp register of the slave, be sure to rewrite both the registers immediately after INTTMmn is generated from the master channel (this applies also to the TDRmq register of the slave channel 2).**

Remark m: Unit number (m = 0), n: Channel number (n = 0)
p: Slave channel number 1, q: Slave channel number 2
n < p < q ≤ 3 (Where p and q are integers greater than n)

Figure 6 - 82 Block Diagram of Operation as Multiple PWM Output Function (Output Two Types of PWMs)

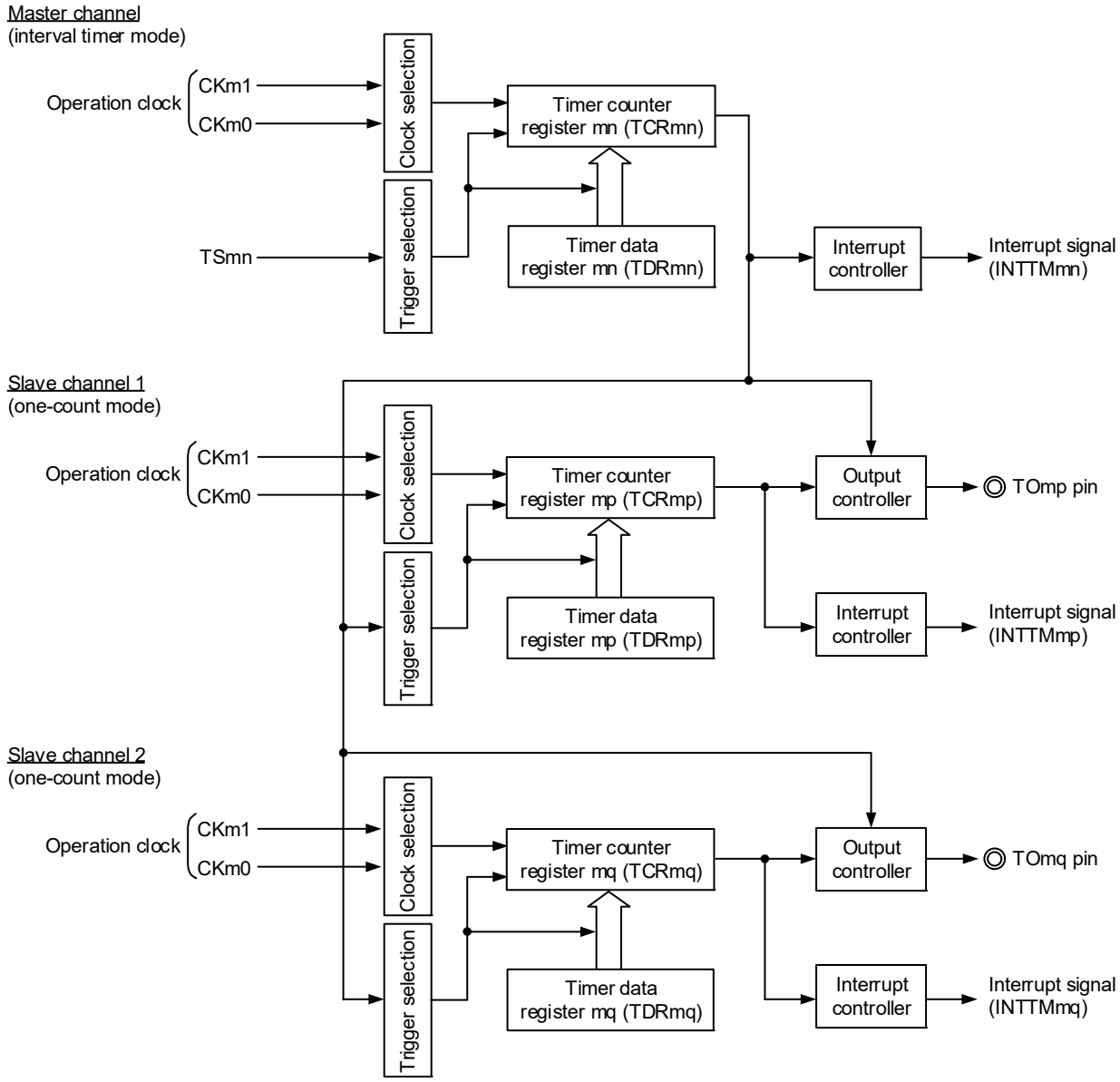

Remark m: Unit number (m = 0), n: Channel number (n = 0)
p: Slave channel number 1, q: Slave channel number 2
$n < p < q \leq 3$ (Where p and q are integers greater than n)

Figure 6 - 83 Example of Basic Timing of Operation as Multiple PWM Output Function (Output Two Types of PWMs)

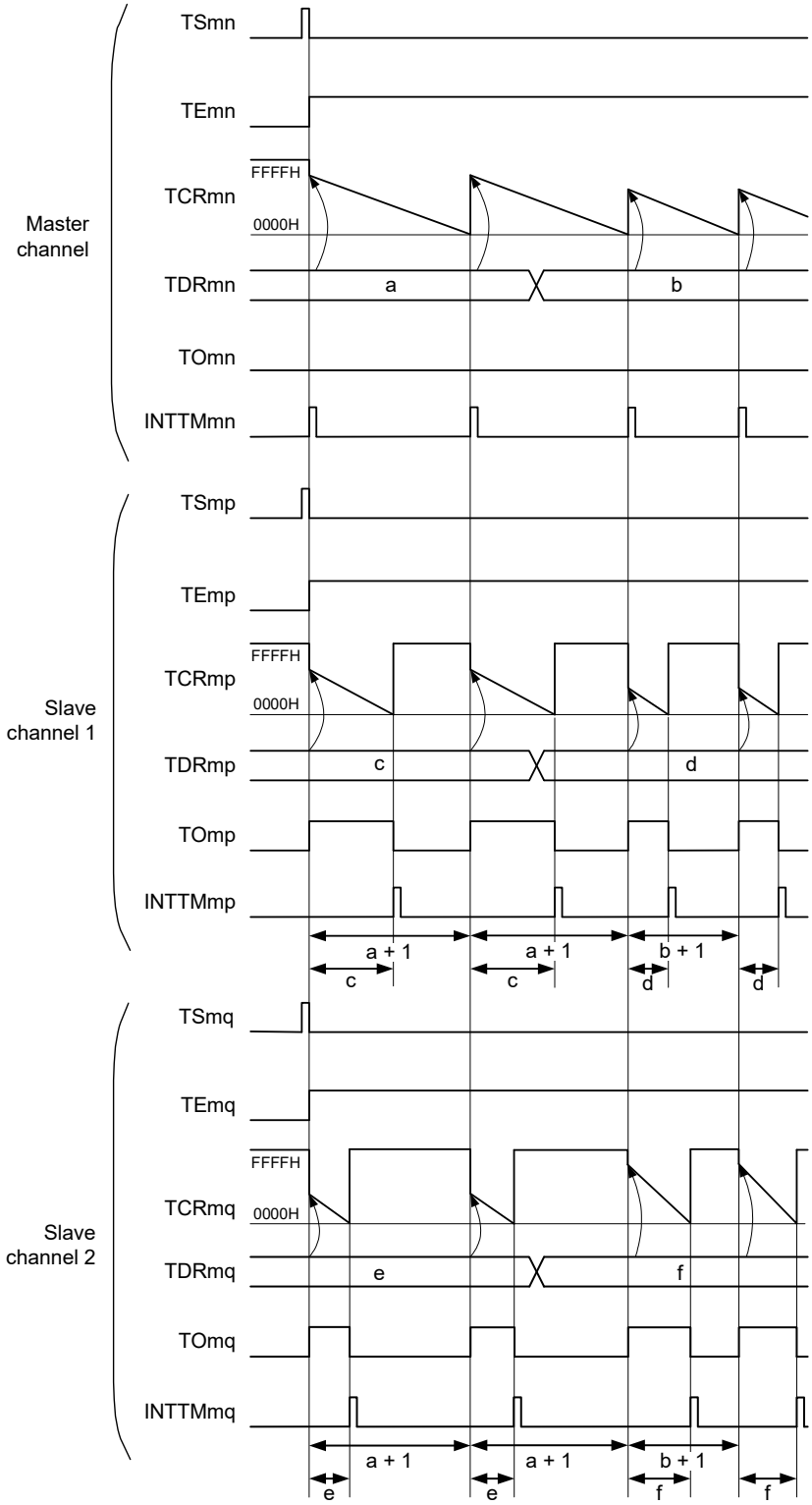

(**Remarks** are listed on the next page.)

Remark 1. m: Unit number (m = 0), n: Channel number (n = 0)
p: Slave channel number 1, q: Slave channel number 2
n < p < q ≤ 3 (Where p and q are integers greater than n)

Remark 2. TSmn, TSmp, TSmq: Bit n, p, q of timer channel start register m (TSm)
TEmn, TEmp, TEmq: Bit n, p, q of timer channel enable status register m (TEm)
TCRmn, TCRmp, TCRmq: Timer count registers mn, mp, mq (TCRmn, TCRmp, TCRmq)
TDRmn, TDRmp, TDRmq: Timer data registers mn, mp, mq (TDRmn, TDRmp, TDRmq)
TOmn, TOmp, TOmq: TOmn, TOmp, and TOmq pins output signal

Figure 6 - 84 Example of Set Contents of Registers
When Multiple PWM Output Function (Master Channel) Is Used

(a) Timer mode register mn (TMRmn)

	15	14	13	12	11	10	9	8	7	6	5	4	3	2	1	0
TMRmn	CKSmn1 1/0	CKSmn0 0	0	CCSmn 0	MASTERmn Note 1	STSmn2 0	STSmn1 0	STSmn0 0	CISmn1 0	CISmn0 0	0	0	MDmn3 0	MDmn2 0	MDmn1 0	MDmn0 1

Operation mode of channel n
000B: Interval timer

Setting of operation when counting is started
1: Generates INTTMmn when counting is started.

Selection of TImn pin input edge
00B: Sets 00B because these are not used.

Start trigger selection
000B: Selects only software start.

Setting of MASTERmn bit (channel 2)
1: Master channel.

Count clock selection
0: Selects operation clock (f_{MCK}).

Operation clock (f_{MCK}) selection
00B: Selects CKm0 as operation clock of channel n.
10B: Selects CKm1 as operation clock of channel n.

(b) Timer output register m (TOm)

	Bit n
TOm	TOmn 0

0: Outputs 0 from TOmn.

(c) Timer output enable register m (TOEm)

	Bit n
TOEm	TOEmn 0

0: Stops the TOmn output operation by counting operation.

(d) Timer output level register m (TOLm)

	Bit n
TOLm	TOLmn 0

0: Cleared to 0 when master channel output mode (TOMmn = 0)

(e) Timer output mode register m (TOMm)

	Bit n
TOMm	TOMmn 0

0: Sets master channel output mode.

Note TMRm2: MASTERmn = 1
TMRm0: Fixed to 0

Remark m: Unit number (m = 0), n: Channel number (n = 0)

Figure 6 - 85 Example of Set Contents of Registers
When Multiple PWM Output Function (Slave Channel) Is Used (Output Two Types of PWMs)

(a) Timer mode register mp, mq (TMRmp, TMRmq)

	15	14	13	12	11	10	9	8	7	6	5	4	3	2	1	0
TMRmp	CKSmp1	CKSmp0		CCSmp	M/S Note	STSmp2	STSmp1	STSmp0	CISmp1	CISmp0			MDmp3	MDmp2	MDmp1	MDmp0
	1/0	0	0	0	0	1	0	0	0	0	0	0	1	0	0	1

	15	14	13	12	11	10	9	8	7	6	5	4	3	2	1	0
TMRmq	CKSmq1	CKSmq0		CCSmq	M/S Note	STSmq2	STSmq1	STSmq0	CISmq1	CISmq0			MDmq3	MDmq2	MDmq1	MDmq0
	1/0	0	0	0	0	1	0	0	0	0	0	0	1	0	0	1

Operation mode of channel p, q
100B: One-count mode

Start trigger during operation
1: Trigger input is valid.

Selection of TImp and TImq pins input edge
00B: Sets 00B because these are not used.

Start trigger selection
100B: Selects INTTMmn of master channel.

Setting of MASTERmp and MASTERmq bits (channel 2)
0: Slave channel
Setting of SPLITmp and SPLITmq bits (channels 1, 3)
0: 16-bit timer mode.

Count clock selection
0: Selects operation clock (f_{MCK}).

Operation clock (f_{MCK}) selection
00B: Selects CKm0 as operation clock of channel p, q.
10B: Selects CKm1 as operation clock of channel p, q.
* Make the same setting as master channel.

(b) Timer output register m (TOm)

	Bit q	Bit p
TOm	TOmq	TOmp
	1/0	1/0

0: Outputs 0 from TOmp or TOmq.
1: Outputs 1 from TOmp or TOmq.

(c) Timer output enable register m (TOEm)

	Bit q	Bit p
TOEm	TOEmq	TOEmp
	1/0	1/0

0: Stops the TOmp or TOmq output operation by counting operation.
1: Enables the TOmp or TOmq output operation by counting operation.

(d) Timer output level register m (TOLm)

	Bit q	Bit p
TOLm	TOLmq	TOLmp
	1/0	1/0

0: Positive logic output (active-high)
1: Negative logic output (active-low)

(e) Timer output mode register m (TOMm)

	Bit q	Bit p
TOMm	TOMmq	TOMmp
	1	1

1: Sets the slave channel output mode.

Note TMRm2: MASTERmp, MASTERmq bit
TMRm1, TMRm3: SPLITmp, SPLITmq bit

Remark m: Unit number (m = 0), n: Channel number (n = 0)
p: Slave channel number 1, q: Slave channel number 2
$n < p < q \leq 3$ (Where p and q are integers greater than n)

Figure 6 - 86 Operation Procedure When Multiple PWM Output Function Is Used (Output Two Types of PWMs) (1/2)

	Software Operation	Hardware Status
TAU default setting		Input clock supply for timer array unit m is stopped (Clock supply is stopped and writing to each register is disabled.)
	Sets the TAUmEN bit of peripheral enable register 0 (PER0) to 1. →	Input clock supply for timer array unit m is supplied. Each channel stops operating. (Clock supply is started and writing to each register is enabled.)
	Sets timer clock select register m (TPSm). Determines clock frequencies of CKm0 and CKm1.	
Channel default setting	Sets timer mode registers mn, mp, mq (TMRmn, TMRmp, TMRmq) of each channel to be used (determines operation mode of channels). An interval (period) value is set to timer data register mn (TDRmn) of the master channel, and a duty factor is set to the TDRmp and TDRmq registers of the slave channels.	Channel stops operating. (Clock is supplied and some power is consumed.)
	Sets slave channels. The TOMmp and TOMmq bits of timer output mode register m (TOMm) are set to 1 (slave channel output mode). Clears the TOLmp and TOLmq bits to 0. Sets the TOmp and TOmq bits and determines default level of the TOmp and TOmq outputs. →	The TOmp and TOmq pins go into Hi-Z output state. The TOmp and TOmq default setting levels are output when the port mode register is in output mode and the port register is 0.
	Sets the TOEmp and TOEmq bits to 1 and enables operation of TOmp and TOmq. →	TOmp and TOmq do not change because channels stop operating.
	Clears the port register and port mode register to 0. →	The TOmp and TOmq pins output the TOmp and TOmq set levels.

(**Remark** is listed on the next page.)

Figure 6 - 87 Operation Procedure When Multiple PWM Output Function Is Used (Output Two Types of PWMs) (2/2)

Operation is resumed.

	Software Operation	Hardware Status
Operation start	(Sets the TOEmp and TOEmq (slave) bits to 1 only when resuming operation.) The TSmn bit (master), and TSmp and TSmq (slave) bits of timer channel start register m (TSm) are set to 1 at the same time. →	TEmn = 1, TEmp, TEmq = 1 When the master channel starts counting, INTTMmn is generated. Triggered by this interrupt, the slave channel also starts counting.
	The TSmn, TSmp, and TSmq bits automatically return to 0 because they are trigger bits.	
During operation	Set values of the TMRmn, TMRmp, TMRmq registers, TOMmn, TOMmp, TOMmq, TOLmn, TOLmp, and TOLmq bits cannot be changed. Set values of the TDRmn, TDRmp, and TDRmq registers can be changed after INTTMmn of the master channel is generated. The TCRmn, TCRmp, and TCRmq registers can always be read. The TSRmn, TSRmp, and TSRmq registers are not used.	The counter of the master channel loads the TDRmn register value to timer count register mn (TCRmn) and counts down. When the count value reaches TCRmn = 0000H, INTTMmn output is generated. At the same time, the value of the TDRmn register is loaded to the TCRmn register, and the counter starts counting down again. At the slave channel 1, the values of the TDRmp register are transferred to the TCRmp register, triggered by INTTMmn of the master channel, and the counter starts counting down. The output levels of TOmp become active one count clock after generation of the INTTMmn output from the master channel. It becomes inactive when TCRmp = 0000H, and the counting operation is stopped. At the slave channel 2, the values of the TDRmq register are transferred to TCRmq register, triggered by INTTMmn of the master channel, and the counter starts counting down. The output levels of TOmq become active one count clock after generation of the INTTMmn output from the master channel. It becomes inactive when TCRmq = 0000H, and the counting operation is stopped. After that, the above operation is repeated.
Operation stop	The TTmn bit (master), TTmp, and TTmq (slave) bits are set to 1 at the same time. →	TEmn, TEmp, TEmq = 0, and count operation stops. The TCRmn, TCRmp, and TCRmq registers hold count value and stop. The TOmp and TOmq output are not initialized but hold current status.
	The TTmn, TTmp, and TTmq bits automatically return to 0 because they are trigger bits.	
	The TOEmp and TOEmq bits of slave channels are cleared to 0 and value is set to the TOmp and TOmq bits. →	The TOmp and TOmq pins output the TOmp and TOmq set levels.
TAU stop	To hold the TOmp and TOmq pin output levels Clears the TOmp and TOmq bits to 0 after the value to be held is set to the port register. →	The TOmp and TOmq pin output levels are held by port function.
	When holding the TOmp and TOmq pin output levels are not necessary Setting not required	
	The TAUmEN bit of the PER0 register is cleared to 0. →	Input clock supply for timer array unit m is stopped All circuits are initialized and SFR of each channel is also initialized. (The TOmp and TOmq bits are cleared to 0 and the TOmp and TOmq pins are set to port mode.)

Remark m: Unit number (m = 0), n: Channel number (n = 0)
p: Slave channel number, q: Slave channel number
$n < p < q \leq 3$ (Where p and q are integer greater than n)

6.10 Cautions When Using Timer Array Unit

6.10.1 Cautions When Using Timer output

Depends on products, a pin is assigned a timer output and other alternate functions. In this case, outputs of the other alternate functions must be set in initial status.

For details, see **4.5 Register Settings When Using Alternate Function**.

CHAPTER 7 TIMER RJ

7.1 Functions of Timer RJ

Timer RJ is a 16-bit timer that can be used for pulse output, external pulse width or period measurement, and counting external events.

This 16-bit timer consists of a reload register and a down counter. The reload register and the down counter are allocated to the same address, and they can be accessed by accessing the TRJ0 register.

Table 7 - 1 lists the Timer RJ Specifications. Figure 7 - 1 shows the Timer RJ Block Diagram.

Table 7 - 1 Timer RJ Specifications

Item		Description
Operating modes	Timer mode	The count source is counted.
	Pulse output mode	The count source is counted and the output is inverted at each underflow of the timer.
	Event counter mode	An external event is counted. Operation is possible in STOP mode.
	Pulse width measurement mode	An external pulse width is measured.
	Pulse period measurement mode	An external pulse period is measured.
Count source (Operating clock)		f_{CLK}, $f_{CLK}/2$, $f_{CLK}/8$, f_{IL}, f_{SUB}, or event input from the event link controller (ELC) selectable
Interrupt		• When the counter underflows. • When the measurement of the active width of the external input (TRJIO0) is completed in pulse width measurement mode. • When the set edge of the external input (TRJIO0) is input in pulse period measurement mode.
Selectable functions		• Coordination with the event link controller (ELC). Event input from the ELC is selectable as a count source.

7.2 Configuration of Timer RJ

Figure 7 - 1 shows the Timer RJ Block Diagram and Table 7 - 2 lists the Timer RJ Pin Configuration.

Figure 7 - 1 Timer RJ Block Diagram

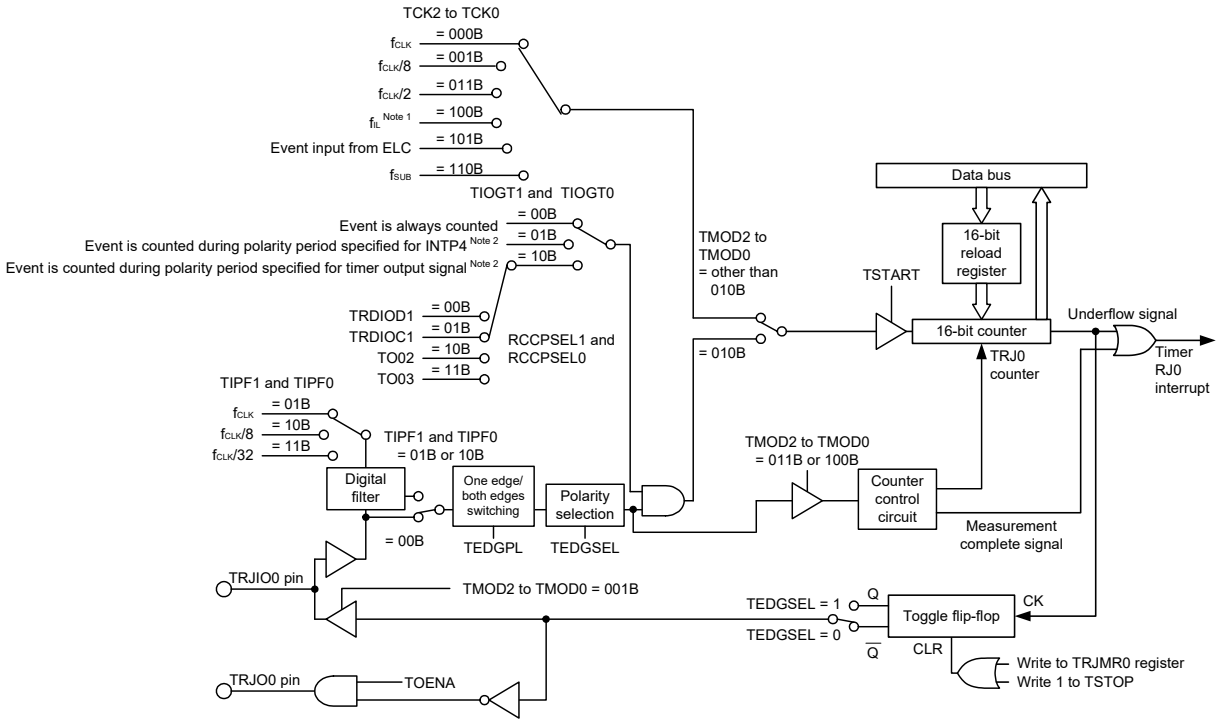

Note 1. When selecting f_{IL} as the count source, set the WUTMMCK0 bit in the subsystem clock supply mode control register (OSMC) to 1. However, f_{IL} cannot be selected as the count source for timer RJ when f_{SUB} is selected as the count source for the real-time clock or the 12-bit interval timer.

Note 2. The polarity can be selected by the RCCPSEL2 bit in the TRJISR0 register.

Table 7 - 2 Timer RJ Pin Configuration

Pin Name	I/O	Function
INTP4	Input	Event counter mode control for timer RJ
TRJIO0 Note	Input/output	External event input and pulse output for timer RJ
TRJO0 Note	Output	Pulse output for timer RJ

Note The assignment of the TRJIO0 pin is selected by bits PIOR12 and PIOR13 in the PIOR1 register. The assignment of the TRJO0 pin is selected by bits PIOR10 and PIOR11 in the PIOR1 register. Refer to **CHAPTER 4 PORT FUNCTIONS** for details.

7.3 Registers Controlling Timer RJ

Table 7 - 3 lists the Registers Controlling Timer RJ.

Table 7 - 3 Registers Controlling Timer RJ

Register Name	Symbol
Peripheral I/O redirection register 1	PIOR1
Peripheral enable register 1	PER1
Subsystem clock supply mode control register	OSMC
Timer RJ counter register 0 Note	TRJ0
Timer RJ control register 0	TRJCR0
Timer RJ I/O control register 0	TRJIOC0
Timer RJ mode register 0	TRJMR0
Timer RJ event pin select register 0	TRJISR0
Port register 0	P0
Port register 3	P3
Port register 4	P4
Port register 5	P5
Port register 7	P7
Port mode register 0	PM0
Port mode register 3	PM3
Port mode register 4	PM4
Port mode register 5	PM5
Port mode register 7	PM7

Note When the TRJ0 register is accessed, the CPU does not proceed to the next instruction processing but enters the wait state for CPU processing. For this reason, if this wait state occurs, the number of instruction execution clocks is increased by the number of wait clocks. The number of wait clocks for access to the TRJ0 register is one clock for both writing and reading.

7.3.1 Peripheral enable register 1 (PER1)

The PER1 register is used to enable or disable supplying the clock to the peripheral hardware. Clock supply to the hardware that is not used is also stopped so as to decrease the power consumption and noise.
To use Timer RJ, be sure to set bit 0 (TRJ0EN) to 1.

The PER1 register can be set by a 1-bit or 8-bit memory manipulation instruction.
Reset signal generation clears this register to 00H.

Figure 7 - 2 Format of Peripheral enable register 1 (PER1)

Address: F007AH After reset: 00H R/W

Symbol	7	6	5	4	3	2	1	0
PER1	DACEN	TRGEN	PGACMPEN	TRD0EN	DTCEN	PWMOPEN	TRXEN	TRJ0EN

TRJ0EN	Control of timer RJ0 input clock supply
0	Stops input clock supply. • SFR used by timer RJ0 cannot be written. • Timer RJ0 is in the reset status.
1	Enables input clock supply. • SFR used by timer RJ0 can be read and written.

Caution When setting timer RJ, be sure to set the TRJ0EN bit to 1 first. If TRJ0EN = 0, writing to a control register of timer RJ is ignored, and all read values are default values (except for port mode registers 0, 3, 4, 5, 7 (PM0, PM3, PM4, PM5, PM7), and port registers 0, 3, 4, 5, 7 (P0, P3, P4, P5, P7)).

7.3.2 Subsystem clock supply mode control register (OSMC)

The WUTMMCK0 bit can be used to select the timer RJ operation clock.

In addition, by stopping clock functions that are unnecessary, the RTCLPC bit can be used to reduce power consumption. For details about setting the RTCLPC bit, see **CHAPTER 5 CLOCK GENERATOR**.

The OSMC register can be set by an 8-bit memory manipulation instruction.

Reset signal generation clears this register to 00H.

Figure 7 - 3 Format of Subsystem clock supply mode control register (OSMC)

Address: F00F3H After reset: 00H R/W

Symbol	7	6	5	4	3	2	1	0
OSMC	RTCLPC	0	0	WUTMMCK0	0	0	0	0

WUTMMCK0	Selection of operation clock (f_{RTC}) for real-time clock, 12-bit interval timer, and timer RJ
0	Subsystem clock (f_{SUB}) • The subsystem clock is selected as the operation clock for the real-time clock and the 12-bit interval timer. • The low-speed on-chip oscillator cannot be selected as the count source for timer RJ.
1	Low-speed on-chip oscillator clock (f_{IL}) • The low-speed on-chip oscillator clock is selected as the operation clock for the real-time clock and the 12-bit interval timer. • Either the low-speed on-chip oscillator or the subsystem clock can be selected as the count source for timer RJ.

7.3.3 Timer RJ counter register 0 (TRJ0)

TRJ0 is a 16-bit register. The write value is written to the reload register and the read value is read from the counter.

The states of the reload register and the counter are changed depending on the TSTART bit in the TRJCR0 register. For details, see **7.4.1 Reload Register and Counter Rewrite Operation**.

The TRJ0 register can be set by a 16-bit memory manipulation instruction.

Reset signal generation clears this register to FFFFH.

Figure 7 - 4 Format of Timer RJ counter register 0 (TRJ0)

Address: F0500H After Reset: FFFFH R/W

Symbol	15	14	13	12	11	10	9	8	7	6	5	4	3	2	1	0
TRJ0																

—	Function	Setting Range
Bits 15 to 0	16-bit counter[Notes 1, 2]	0000H to FFFFH

Note 1. When 1 is written to the TSTOP bit in the TRJCR0 register, the 16-bit counter is forcibly stopped and set to FFFFH.

Note 2. When the setting of bits TCK2 to TCK0 in the TRJMR0 register is other than 001B ($f_{CLK}/8$) or 011B ($f_{CLK}/2$), if the TRJ0 register is set to 0000H, a request signal to the DTC and the ELC is generated only once immediately after the count starts. starts. However, the TRJO0 and TRJIO0 output is toggled.
When the TRJ0 register is set to 0000H in event counter mode, regardless of the value of bits TCK2 to TCK0, a request signal to the DTC and the ELC is generated only once immediately after the count starts.
In addition, the TRJO0 output is toggled even during a period other than the specified count period.
When the TRJ0 register is set to 0000H or a higher value, a request signal is generated each time TRJ underflows.

Caution **When the TRJ0 register is accessed, the CPU does not proceed to the next instruction processing but enters the wait state for CPU processing. For this reason, if this wait state occurs, the number of instruction execution clocks is increased by the number of wait clocks. The number of wait clocks for access to the TRJ0 register is one clock for both writing and reading.**

7.3.4 Timer RJ control register 0 (TRJCR0)

The TRJCR0 register starts or stops count operation and indicates the status of timer RJ.

The TRJCR0 register can be set by an 8-bit memory manipulation instruction.

Reset signal generation clears this register to 00H.

Figure 7 - 5 Format of Timer RJ control register 0 (TRJCR0)

Address: F0240H After Reset: 00H R/W

Symbol	7	6	5	4	3	2	1	0
TRJCR0	0	0	TUNDF	TEDGF	0	TSTOP	TCSTF	TSTART

TUNDF	Timer RJ underflow flag
0	No underflow
1	Underflow
[Condition for setting to 0] • When 0 is written to this bit by a program. [Condition for setting to 1] • When the counter underflows.	

TEDGF	Active edge judgement flag
0	No active edge received
1	Active edge received
[Condition for setting to 0] • When 0 is written to this bit by a program. [Conditions for setting to 1] • When the measurement of the active width of the external input (TRJIO) is completed in pulse width measurement mode. • The set edge of the external input (TRJIO) is input in pulse period measurement mode.	

TSTOP	Timer RJ count forced stop[Note 1]
When 1 is written to this bit, the count is forcibly stopped. The read value is 0.	

TCSTF	Timer RJ count status flag[Note 2]
0	Count stops
1	Count in progress
[Conditions for setting to 0] • When 0 is written to the TSTART bit (the TCSTF bit is set to 0 in synchronization with the count source). • When 1 is written to the TSTOP bit. [Condition for setting to 1] • When 1 is written to the TSTART bit (the TCSTF bit is set to 1 in synchronization with the count source).	

TSTART	Timer RJ count start[Note 2]
0	Count stops
1	Count starts
Count operation is started by writing 1 to the TSTART bit and stopped by writing 0. When the TSTART bit is set to 1 (count starts), the TCSTF bit is set to 1 (count in progress) in synchronization with the count source. Also, after 0 is written to the TSTART bit, the TCSTF bit is set to 0 (count stops) in synchronization with the count source. For details, see **7.5.1 Count Operation Start and Stop Control**.	

Note 1. When 1 (count is forcibly stopped) is written to the TSTOP bit, bits TSTART and TCSTF are initialized at the same time. The pulse output level is also initialized.

Note 2. For notes on using bits TSTART and TCSTF, see **7.5.1 Count Operation Start and Stop Control**.

7.3.5 Timer RJ I/O control register 0 (TRJIOC0)

The TRJIOC0 register sets the input/output of timer RJ.

The TRJIOC0 register can be set by a 1-bit or 8-bit memory manipulation instruction.

Reset signal generation clears this register to 00H.

Figure 7 - 6 Format of Timer RJ I/O control register 0 (TRJIOC0)

Address: F0241H After Reset: 00H R/W

Symbol	7	6	5	4	3	2	1	0
TRJIOC0	TIOGT1	TIOGT0	TIPF1	TIPF0	0	TOENA	0	TEDGSEL

TIOGT1	TIOGT0	TRJIO count control[Notes 1, 2]
0	0	Event is always counted
0	1	Event is counted during polarity period specified for INTP4
1	0	Event is counted during polarity period specified for timer output signal
Other than above		Setting prohibited

TIPF1	TIPF0	TRJIO input filter select
0	0	No filter
0	1	Filter sampled at f_{CLK}
1	0	Filter sampled at $f_{CLK}/8$
1	1	Filter sampled at $f_{CLK}/32$
These bits are used to specify the sampling frequency of the filter for the TRJIO input. If the input to the TRJIO0 pin is sampled and the value matches three successive times, that value is taken as the input value.		

TOENA	TRJO output enable
0	TRJO output disabled (port)
1	TRJO output enabled

TEDGSEL	I/O polarity switch
Function varies depending on the operating mode (see **Tables 7 - 4** and **7 - 5**).	

Note 1. When INTP4 or the timer output signal is used, the polarity to count an event can be selected by the RCCPSEL2 bit in the TRJISR0 register.

Note 2. Bits TIOGT0 and TIOGT1 are enabled only in event counter mode.

Table 7 - 4 TRJIO I/O Edge and Polarity Switching

Operating Mode	Function
Timer mode	Not used (I/O port)
Pulse output mode	0: Output is started at high (Initialization level: High) 1: Output is started at low (Initialization level: Low)
Event counter mode	0: Count at rising edge 1: Count at falling edge
Pulse width measurement mode	0: Low-level width is measured 1: High-level width is measured
Pulse period measurement mode	0: Measure from one rising edge to the next rising edge 1: Measure from one falling edge to the next falling edge

Table 7 - 5 TRJO Output Polarity Switching

Operating Mode	Function
All modes	0: Output is started at low (Initialization level: Low) 1: Output is started at high (Initialization level: High)

7.3.6 Timer RJ mode register 0 (TRJMR0)

The TRJMR0 register sets the operating mode of timer RJ.

The TRJMR0 register can be set by a 1-bit or 8-bit memory manipulation instruction.

Reset signal generation clears this register to 00H.

Figure 7 - 7 Format of Timer RJ mode register 0 (TRJMR0)

Address: F0242H After Reset: 00H R/W

Symbol	7	6	5	4	3	2	1	0
TRJMR0	0	TCK2	TCK1	TCK0	TEDGPL	TMOD2	TMOD1	TMOD0

TCK2	TCK1	TCK0	Timer RJ count source select[Notes 1, 2]
0	0	0	f_{CLK}
0	0	1	$f_{CLK}/8$
0	1	1	$f_{CLK}/2$
1	0	0	f_{IL} [Note 4]
1	0	1	Event input from ELC
1	1	0	f_{SUB}
Other than above			Setting prohibited

TEDGPL	TRJIO edge polarity select[Note 5]
0	One edge
1	Both edges

TMOD2	TMOD1	TMOD0	Timer RJ operating mode select[Note 3]
0	0	0	Timer mode
0	0	1	Pulse output mode
0	1	0	Event counter mode
0	1	1	Pulse width measurement mode
1	0	0	Pulse period measurement mode
Other than above			Setting prohibited

Note 1. When event counter mode is selected, the external input (TRJIO) is selected as the count source regardless of the setting of bits TCK0 to TCK2.

Note 2. Do not switch count sources during count operation. Count sources should be switched when both the TSTART and TCSTF bits in the TRJCR0 register are set to 0 (count stops).

Note 3. The operating mode can be changed only when the count is stopped while both the bits TSTART and TCSTF in the TRJCR0 register are set to 0 (count stops). Do not change the operating mode during count operation.

Note 4. When selecting f_{IL} as the count source, set the WUTMMCK0 bit in the subsystem clock supply mode control register (OSMC) to 1.
However, f_{IL} cannot be selected as the count source for timer RJ when f_{SUB} is selected as the count source for the real-time clock or the 12-bit interval timer.

Note 5. The TEDGPL bit is enabled only in event counter mode.

Note 6. Write access to the TRJMR0 register initializes the output from pins TRJO0 and TRJIO0 of timer RJ.
For details on the output level at initialization, refer to the description of **Figure 7 - 6 Format of Timer RJ I/O control register 0 (TRJIOC0)**.

7.3.7 Timer RJ event pin select register 0 (TRJISR0)

The TRJISR0 register selects the timer for controlling the event count period and sets the polarity in event counter mode.

The TRJISR0 register can be set by a 1-bit or 8-bit memory manipulation instruction.

Reset signal generation clears this register to 00H.

Figure 7 - 8 Format of Timer RJ event pin select register 0 (TRJISR0)

Address: F0243H After Reset: 00H R/W

Symbol	7	6	5	4	3	2	1	0
TRJISR0	0	0	0	0	0	RCCPSEL2 Note	RCCPSEL1 Note	RCCPSEL0 Note

RCCPSEL2 Note	Timer output signal and INTP4 polarity selection
0	An event is counted during the low-level period
1	An event is counted during the high-level period

RCCPSEL1 Note	RCCPSEL0 Note	Timer output signal selection
0	0	TRDIOD1
0	1	TRDIOC1
1	0	TO02
1	1	TO03

Note Bits RCCPSEL0 to RCCPSEL2 are enabled only in event counter mode.

7.3.8 Port mode registers 0, 3, 4, 5, 7 (PM0, PM3, PM4, PM5, PM7)

These registers set input/output of ports 0, 3, 4, 5, 7 in 1-bit units.
When using the ports (P01/TRJIO0, P30/TRJO0, etc.) to be shared with the timer output pin for timer output, set the port mode register (PMxx) bit and port register (Pxx) bit corresponding to each port to 0.

Example: Example:When using P01/TRJIO0 for timer output
Set the PM01 bit of port mode register 0 to 0.
Set the P01 bit of port register 0 to 0.

When using the ports (P01/TRJIO0, etc.) to be shared with the timer input pin for timer input, set the port mode register (PMxx) bit corresponding to each port to 1. At this time, the port register (Pxx) bit may be 0 or 1.

Example: Example:When using P01/TRJIO0 for timer input
Set the PM01 bit of port mode register 0 to 1.
Set the P01 bit of port register 0 to 0 or 1.

The PM0, PM3, PM4, PM5, PM7 registers can be set by a 1-bit or 8-bit memory manipulation instruction.
Reset signal generation sets these registers to FFH.

Figure 7 - 9 Format of Port Mode Registers 0, 3, 4, 5, 7 (PM0, PM3, PM4, PM5, PM7) (64-pin products)

Address: FFF20H After reset: FFH R/W

Symbol	7	6	5	4	3	2	1	0
PM0	1	PM06	PM05	PM04	PM03	PM02	PM01	PM00

Address: FFF23H After reset: FFH R/W

Symbol	7	6	5	4	3	2	1	0
PM3	1	1	1	1	1	1	PM31	PM30

Address: FFF24H After reset: FFH R/W

Symbol	7	6	5	4	3	2	1	0
PM4	1	1	1	1	PM43	PM42	PM41	PM40

Address: FFF25H After reset: FFH R/W

Symbol	7	6	5	4	3	2	1	0
PM5	1	1	PM55	PM54	PM53	PM52	PM51	PM50

Address: FFF25H After reset: FFH R/W

Symbol	7	6	5	4	3	2	1	0
PM7	PM77	PM76	PM75	PM74	PM73	PM72	PM71	PM70

PMmn	Pmn pin I/O mode selection (m = 0, 3, 4, 5, 7; n = 0 to 7)
0	Output mode (output buffer on)
1	Input mode (output buffer off)

Remark The figure shown above presents the format of port mode registers 0, 3, 4, 5 and 7 of the 64-pin products. The format of the port mode register of other products, see **Tables 4-4** to **4-6 PMxx, Pxx, PUxx, PIMxx, POMxx, PMCxx registers and the bits mounted on each product**.

7.4 Timer RJ Operation

7.4.1 Reload Register and Counter Rewrite Operation

Regardless of the operating mode, the timing of the rewrite operation to the reload register and the counter differs depending on the value in the TSTART bit in the TRJCR0 register. When the TSTART bit is 0 (count stops), the count value is directly written to the reload register and the counter. When the TSTART bit is 1 (count starts), the value is written to the reload register in synchronization with the count source, and then to the counter in synchronization with the next count source.

Figure 7 - 10 shows the Timing of Rewrite Operation with TSTART Bit Value.

Figure 7 - 10 Timing of Rewrite Operation with TSTART Bit Value

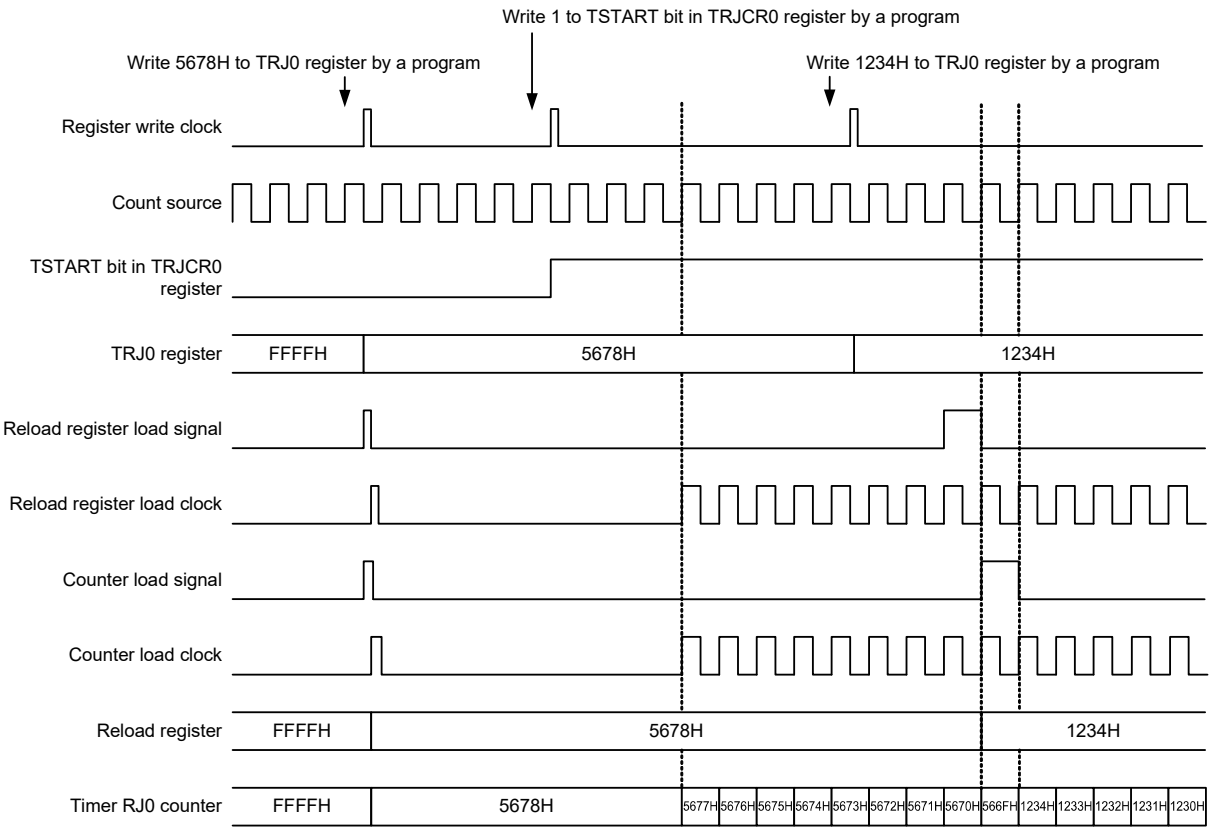

7.4.2 Timer Mode

In this mode, the counter is decremented by the count source selected by bits TCK0 to TCK2 in the TRJMR0 register.

In timer mode, the count value is decremented by 1 each time the count source is input. When the count value reaches 0000H and the next count source is input, an underflow occurs and an interrupt request is generated.

Figure 7 - 11 shows the Operation Example in Timer Mode.

Figure 7 - 11 Operation Example in Timer Mode

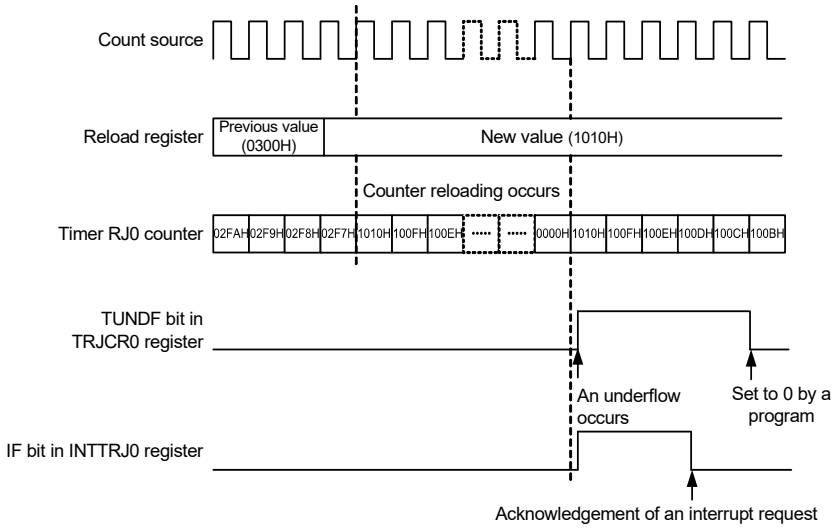

7.4.3 Pulse Output Mode

In this mode, the counter is decremented by the count source selected by bits TCK0 to TCK2 in the TRJMR0 register, and the output level of pins TRJIO and TRJO pin is inverted each time an underflow occurs.

In pulse output mode, the count value is decremented by 1 each time the count source is input. When the count value reaches 0000H and the next count source is input, an underflow occurs and an interrupt request is generated.

In addition, a pulse can be output from pins TRJIO0 and TRJO0. The output level is inverted each time an underflow occurs. The pulse output from the TRJO0 pin can be stopped by the TOENA bit in the TRJIOC0 register.

Also, the output level can be selected by the TEDGSEL bit in the TRJIOC0 register.

Figure 7 - 12 shows the Operation Example in Pulse Output Mode.

Figure 7 - 12 Operation Example in Pulse Output Mode

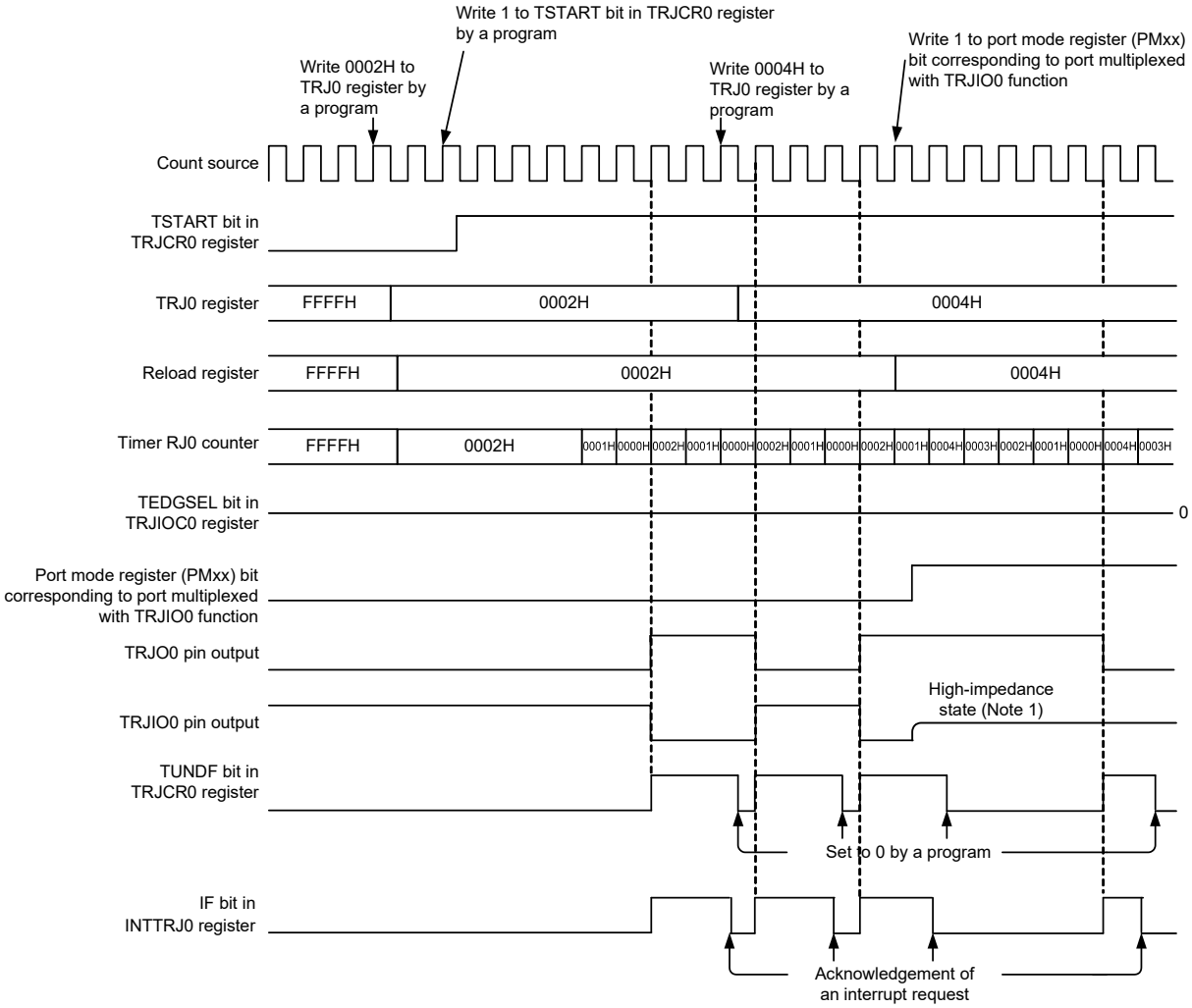

Note 1: The TRJIO0 pin becomes high impedance by output enable control on the port selected as the TRJIO function.

7.4.4 Event Counter Mode

In this mode, the counter is decremented by an external event signal (count source) input to the TRJIO0 pin. Various periods for counting events can be set by bits TIOGT0 and TIOGT1 in the TRJIOC0 register and the TRJISR0 register. In addition, the filter function for the TRJIO0 input can be specified by bits TIPF0 and TIPF1 in the TRJIOC0 register.

Also, the output from the TRJO0 pin can be toggled even in event counter mode.

When event counter mode is used, see **7.5.5 Procedure for Setting Pins TRJO0 and TRJIO0**.

Figure 7 - 13 shows the Operation Example 1 in Event Counter Mode.

Figure 7 - 13 Operation Example 1 in Event Counter Mode

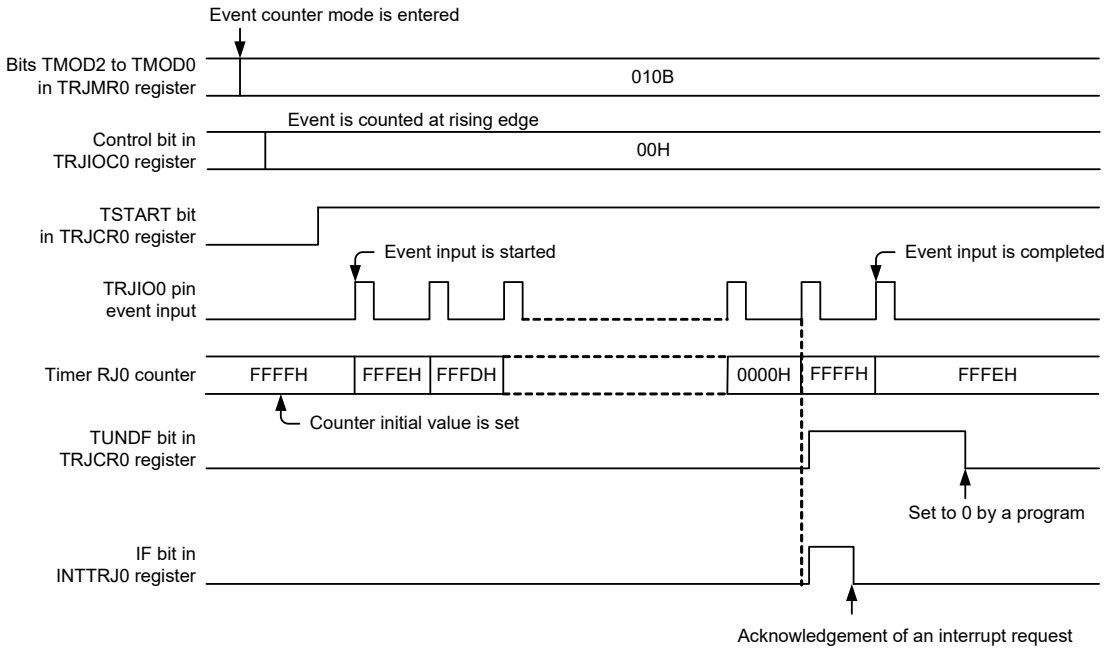

Figure 7 - 14 shows an operation example for counting during the specified period in event counter mode (bits TIOGT1 and TIOGT0 in the TRJIO0 register are set to 01B or 10B).

Figure 7 - 14 Operation Example 2 in Event Counter Mode

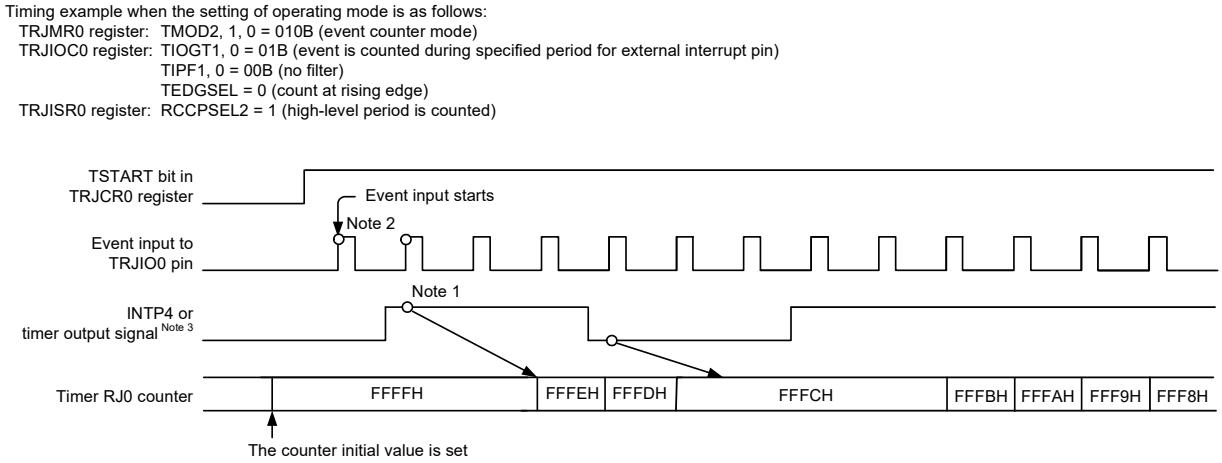

The following notes apply only when bits TIOGT1 and TIOGT0 in the TRJIOC0 register are 01B or 10B for the setting of operating mode in event count mode.

Note 1. To control synchronization, there is a delay of two cycles of the count source until count operation is affected.

Note 2. Count operation may be performed for two cycles of the count source immediately after the count is started, depending on the previous state before the count is stopped.
To disable the count for two cycles immediately after the count is started, write 1 to the TSTOP bit in the TRJCR0 register to initialize the internal circuit, and then make operation settings before starting count operation.

Note 3. For the timer output signal selected by the RCCPSEL1 and RCCPSEL0 bits in the TRJISR0 register, the pin assigned to the timer output function cannot be used as the output of any multiplexed function other than the timer.

7.4.5 Pulse Width Measurement Mode

In this mode, the pulse width of an external signal input to the TRJIO0 pin is measured.

When the level specified by the TEDGSEL bit in the TRJIOC0 register is input to the TRJIO0 pin, the decrement is started with the selected count source. When the specified level on the TRJIO0 pin ends, the counter is stopped, the TEDGF bit in the TRJCR0 register is set to 1 (active edge received), and an interrupt request is generated. The measurement of pulse width data is performed by reading the count value while the counter is stopped. Also, when the counter underflows during measurement, the TUNDF bit in the TRJCR0 register is set to 1 (underflow) and an interrupt request is generated.

Figure 7 - 15 shows the Operation Example in Pulse Width Measurement Mode.

When accessing bits TEDGF and TUNDF in the TRJCR0 register, see **7.5.2 Access to Flags (Bits TEDGF and TUNDF in TRJCR0 Register)**.

Figure 7 - 15 Operation Example in Pulse Width Measurement Mode

This example applies when the high-level width of the measurement pulse is measured (TEDGSEL bit in TRJIOC0 register = 1)

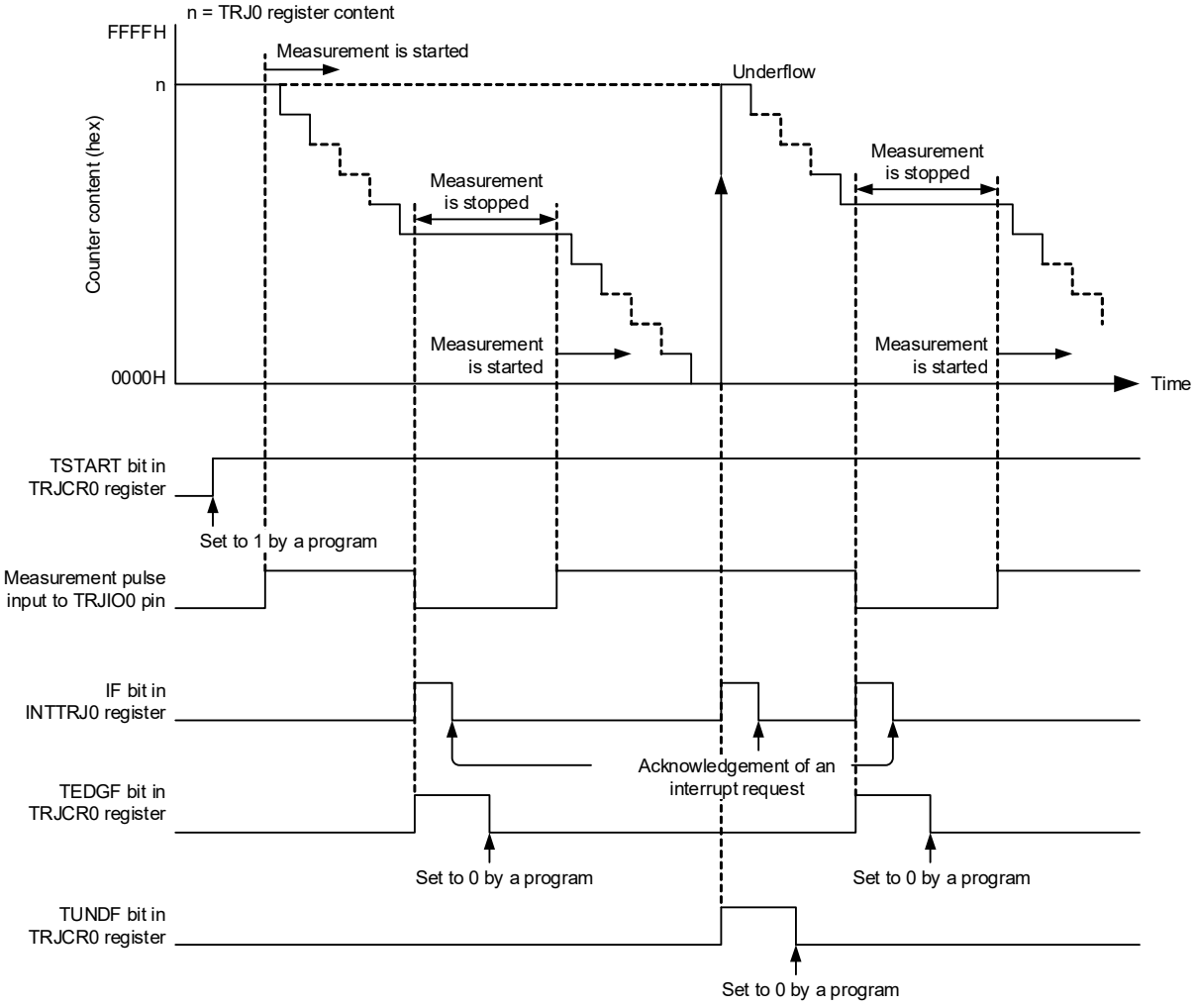

7.4.6 Pulse Period Measurement Mode

In this mode, the pulse period of an external signal input to the TRJIO0 pin is measured.

The counter is decremented by the count source selected by bits TCK0 to TCK2 in the TRJMR0 register. When a pulse with the period specified by the TEDGSEL bit in the TRJIOC0 register is input to the TRJIO0 pin, the count value is transferred to the read-out buffer at the rising edge of the count source. The value in the reload register is loaded to the counter at the next rising edge. Simultaneously, the TEDGF bit in the TRJCR0 register is set to 1 (active edge received) and an interrupt request is generated. The read-out buffer (TRJ0 register) is read at this time and the difference from the reload value is the period data of the input pulse. The period data is retained until the read-out buffer is read. When the counter underflows, the TUNDF bit in the TRJCR0 register is set to 1 (underflow) and an interrupt request is generated.

Figure 7 - 16 shows the Operation Example in Pulse Period Measurement Mode.

Only input pulses with a period longer than twice the period of the count source. Also, the low-level and high-level widths must be both longer than the period of the count source. If a pulse period shorter than these conditions is input, the input may be ignored

Figure 7 - 16 Operation Example in Pulse Period Measurement Mode

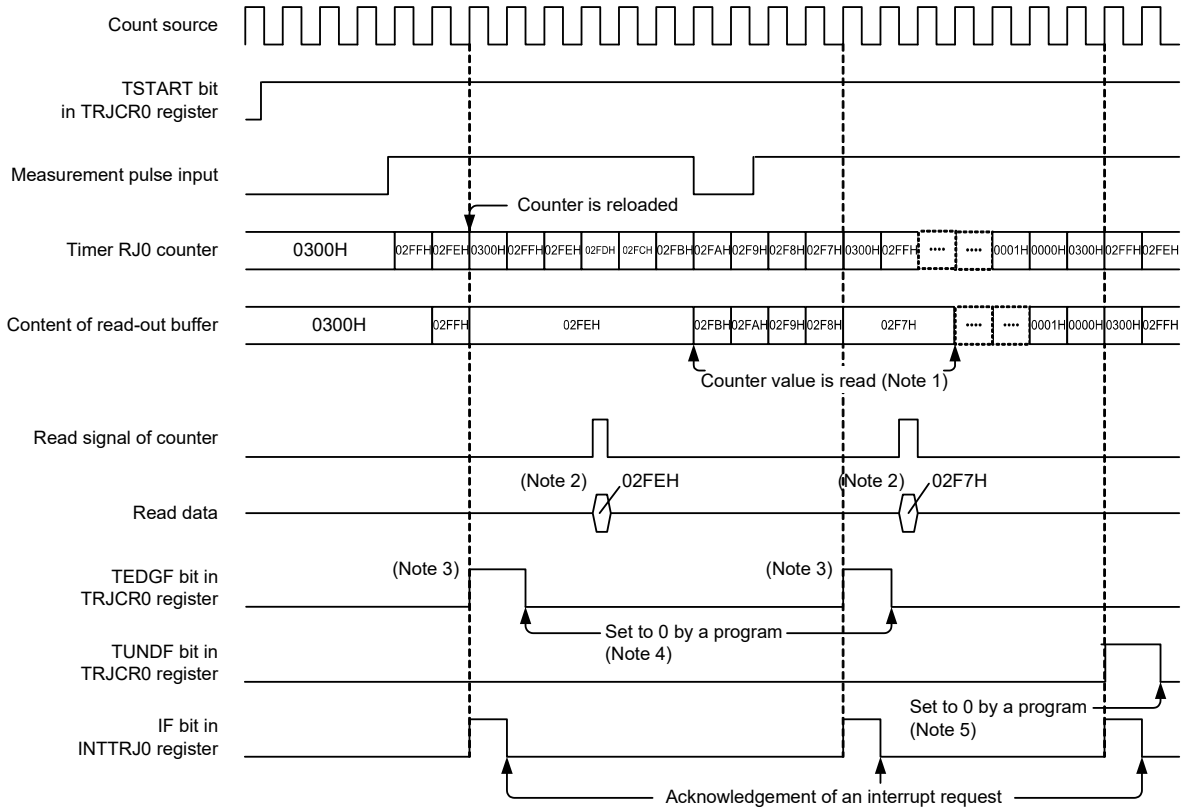

This example applies when the initial value of the TRJ0 register is set to 0300H, the TEDGSEL bit in the TRJIOC0 register is set to 0, and the period from one rising edge to the next edge of the measurement pulse is measured.

Note 1. Reading from the TRJ0 register must be performed during the period from when the TEDGF bit is set to 1 (active edge received) until the next active edge is input. The content of the read-out buffer is retained until the TRJ0 register is read. If it is not read before the active edge is input, the measurement result of the previous period is retained.

Note 2. When the TRJ0 register is read in pulse period measurement mode, the content of the read-out buffer is read.

Note 3. When the active edge of the measurement pulse is input and then the set edge of an external pulse is input, the TEDGF bit in the TRJCR0 register is set to 1 (active edge received).

Note 4. To set to 0 by a program, write 0 to the TEDGF bit in the TRJCR0 register using an 8-bit memory manipulation instruction.

Note 5. To set to 0 by a program, write 0 to the TUNDF bit in the TRJCR0 register using an 8-bit memory manipulation instruction.

7.4.7 Coordination with Event Link Controller (ELC)

Through coordination with the ELC, event input from the ELC can be set to be the count source. Bits TCK0 to TCK2 in the TRJMR0 register count at the rising edge of event input from the ELC. However, ELC input does not function in event counter mode.

The ELC setting procedure is shown below:

• Procedure for starting operation

(1) Set the event output destination select register (ELSELRn) for the ELC.
(2) Set the operating mode for the event generation source.
(3) Set the mode for timer RJ.
(4) Start the count operation of timer RJ.
(5) Start the operation of the event generation source.

• Procedure for stopping operation

(1) Stop the operation of the event generation source.
(2) Stop the count operation of timer RJ.
(3) Set the event output destination select register (ELSELRn) for the ELC to 0.

7.4.8 Output Settings for Each Mode

Tables 7 - 6 and 7 - 7 list the states of pins TRJO0 and TRJIO0 in each mode.

Table 7 - 6 TRJO0 Pin Setting

Operating Mode	TRJIOC0 Register		TRJO0 Pin Output
	TOENA Bit	TEDGSEL Bit	
All modes	1	1	Inverted output
		0	Normal output
	0	0 or 1	Output disabled

Table 7 - 7 TRJIO0 Pin Setting

Operating Mode	TRJIOC0 Register		TRJIO0 Pin I/O
	PMXX Bit Note	TEDGSEL Bit	
Timer mode	0 or 1	0 or 1	Input (Not used)
Pulse output mode	1	0 or 1	Output disabled (Hi-Z output)
	0	1	Normal output
		0	Inverted output
Event counter mode	1	0 or 1	Input
Pulse width measurement mode			
Pulse period measurement mode			

Note The port mode register (PMxx) bit corresponding to port multiplexed with TRJIO0 function.

7.5 Cautions for Timer RJ

7.5.1 Count Operation Start and Stop Control

• When event count mode is set or the count source is set to other than the ELC

After 1 (count starts) is written to the TSTART bit in the TRJCR0 register while the count is stopped, the TCSTF bit in the TRJCR0 register remains 0 (count stops) for three cycles of the count source. Do not access the registers associated with timer RJ Note other than the TCSTF bit until this bit is set to 1 (count in progress).

After 0 (count stops) is written to the TSTART bit during a count operation, the TCSTF bit remains 1 for three cycles of the count source. When the TCSTF bit is set to 0, the count is stopped. Do not access the registers associated with timer RJ Note other than the TCSTF bit until this bit is set to 0.

Clear the interrupt register before changing the TATART bit from 0 to 1. Refer to **CHAPTER 24 INTERRUPT FUNCTIONS** for details.

Note Registers associated with timer RJ: TRJ0, TRJCR0, TRJIOC0, TRJMR0, and TRJISR0

• When event count mode is set or the count source is set to the ELC

After 1 (count starts) is written to the TSTART bit in the TRJCR0 register while the count is stopped, the TCSTF bit in the TRJCR0 register remains 0 (count stops) for two cycles of the CPU clock. Do not access the registers associated with timer RJ Note other than the TCSTF bit until this bit is set to 1 (count in progress).

After 0 (count stops) is written to the TSTART bit during a count operation, the TCSTF bit remains 1 for two cycles of the CPU clock. When the TCSTF bit is set to 0, the count is stopped. Do not access the registers associated with timer RJ Note other than the TCSTF bit until this bit is set to 0.

Clear the interrupt register before changing the TATART bit from 0 to 1. Refer to **CHAPTER 24 INTERRUPT FUNCTIONS** for details.

Note Registers associated with timer RJ: TRJ0, TRJCR0, TRJIOC0, TRJMR0, and TRJISR0

7.5.2 Access to Flags (Bits TEDGF and TUNDF in TRJCR0 Register)

Bits TEDGF and TUNDF in the TRJCR0 register are set to 0 by writing 0 by a program, but writing 1 to these bits has no effect. If a read-modify-write instruction is used to set the TRJCR0 register, bits TEDGF and TUNDF may be erroneously set to 0 depending on the timing, even when the TEDGF bit is set to 1 (active edge received) and the TUNDF bit is set to 1 (underflow) during execution of the instruction. Use an 8-bit memory manipulation instruction to access to the TRJCR0 register.

7.5.3 Access to Counter Register

When bits TSTART and TCSTF in the TRJCR0 register are both 1 (count starts), allow at least three cycles of the count source clock between writes when writing to the TRJ0 register successively.

7.5.4 When Changing Mode

The registers associated with timer RJ operating mode (TRJIOC0, TRJMR0, and TRJISR0) can be changed only when the count is stopped with both the TSTART and TCSTF bits set to 0 (count stops). Do not change these registers during count operation.

When the registers associated with timer RJ operating mode are changed, the values of bits TSTART and TCSTF are undefined. Write 0 (no active edge received) to the TEDGF bit and 0 (no underflow) to the TUNDF bit before starting the count.

7.5.5 Procedure for Setting Pins TRJO0 and TRJIO0

After a reset, the I/O ports multiplexed with pins TRJO0 and TRJIO0 function as input ports.

To output from pins TRJO0 and TRJIO0, use the following setting procedure:
Changing procedure
(1) Set the mode.
(2) Set the initial value/output enabled.
(3) Set the port register bits corresponding to pins TRJO0 and TRJIO0 to 0.
(4) Set the port mode register bits corresponding to pins TRJO0 and TRJIO0 to output mode.
(Output is started from pins TRJO0 and TRJIO0)
(5) Start the count (TSTART in TRJCR0 register = 1).

To input from the TRJIO0 pin, use the following setting procedure:
(1) Set the mode.
(2) Set the initial value/edge selected.
(3) Set the port mode register bit corresponding to TRJIO0 pin to input mode.
(Input is started from the TRJIO0 pin)
(4) Start the count (TSTART in TRJMR0 register = 1).
(5) Wait until the TCSTF bit in the TRJCR0 register is set to 1 (count in progress).
(In event counter mode only)
(6) Input an external event from the TRJIO0 pin.
(7) The processing on completion of the first measurement is invalid (the measured value is valid for the second and subsequent times). (In pulse width measurement mode and pulse period measurement mode only)

7.5.6 When Timer RJ is not Used

When timer RJ is not used, set bits TMOD2 to TMOD0 in the TRJMR0 register to 000B (timer mode) and set the TOENA bit in the TRJIOC0 register to 0 (TRJO output disabled).

7.5.7 When Timer RJ Operating Clock is Stopped

Supplying or stopping the timer RJ clock can be controlled by the TRJ0EN bit in the PER1 register. Note that the following SFRs cannot be accessed while the timer RJ clock is stopped. Make sure the timer RJ clock is supplied before accessing any of these registers.
Registers TRJ0, TRJCR0, TRJMR0, TRJIOC0, and TRJISR0.

7.5.8 Procedure for Setting STOP Mode (Event Counter Mode)

To perform event counter mode operation during STOP mode, first supply the timer RJ clock and then use the following procedure to enter STOP mode.

Setting procedure

(1) Set the operating mode.
(2) Start the count (TSTART = 1, TCSTF = 1).
(3) Stop supplying the timer RJ clock.

To stop event counter mode operation during STOP mode, use the following procedure to stop operation.

(1) Supply the timer RJ clock.
(2) Stop the count (TSTART = 0, TCSTF = 0)

7.5.9 Functional Restriction in STOP Mode (Event Counter Mode Only)

When event counter mode operation is performed during STOP mode, the digital filter function cannot be used.

7.5.10 When Count is Forcibly Stopped by TSTOP Bit

After the counter is forcibly stopped by the TSTOP bit in the TRJCR0 register, do not access the following SFRs for one cycle of the count source.

Registers TRJ0, TRJCR0, and TRJMR0

7.5.11 Digital Filter

When the digital filter is used, do not start timer operation for five cycles of the digital filter clock after setting bits TIPF1 and TIPF0.

Also, do not start timer operation for five cycles of the digital filter clock when the TEDGSEL bit in the TRJIOC register is changed while the digital filter is used.

7.5.12 When Selecting f_{IL} as Count Source

When selecting f_{IL} as the count source, set the WUTMMCK0 bit in the subsystem clock supply mode control register (OSMC) to 1. However, f_{IL} cannot be selected as the count source for timer RJ when f_{SUB} is selected as the count source for the real-time clock or the 12-bit interval timer.

CHAPTER 8 TIMER RD

8.1 Functions of Timer RD

Timer RD has four modes:

• Timer mode

- Input capture function — Transfer the counter value to a register with an external signal as the trigger
- Output compare function — Detect register value matches with a counter (Pin output can be changed at detection)
- PWM function — Output pulse of any width continuously

The following three modes use the PWM function.

• Reset synchronous PWM mode — Output three-phase waveforms (6) without sawtooth wave modulation and dead time

• Complementary PWM mode — Output three-phase waveforms (6) with triangular wave modulation and dead time

• PWM3 mode — Output PWM waveforms (2) with a fixed period

The timer mode input capture function, output compare function, and PWM function are equivalent in timer RD0 and timer RD1, and these functions can be selected individually for each pin. Also, a combination of these functions can be used in timer RD0 and timer RD1.

In reset synchronous PWM mode, complementary PWM mode, and PWM3 mode, a waveform is output with a combination of counters and registers in timer RD0 and timer RD1. Pin functions depend on the mode.

Timer RD has four I/O pins.

The operating clock for timer RD is f_{CLK} or f_{HOCO}.

Timer RD operates in coordination with timer RX.

8.2 Configuration of Timer RD

Figure 8 - 1 shows the Timer RD Block Diagram and Table 8 - 1 lists the Timer RD Pin Configuration.

For the PWMOPA functions, see 8.8 PWM Option Unit A (PWMOPA).

Figure 8 - 1 Timer RD Block Diagram

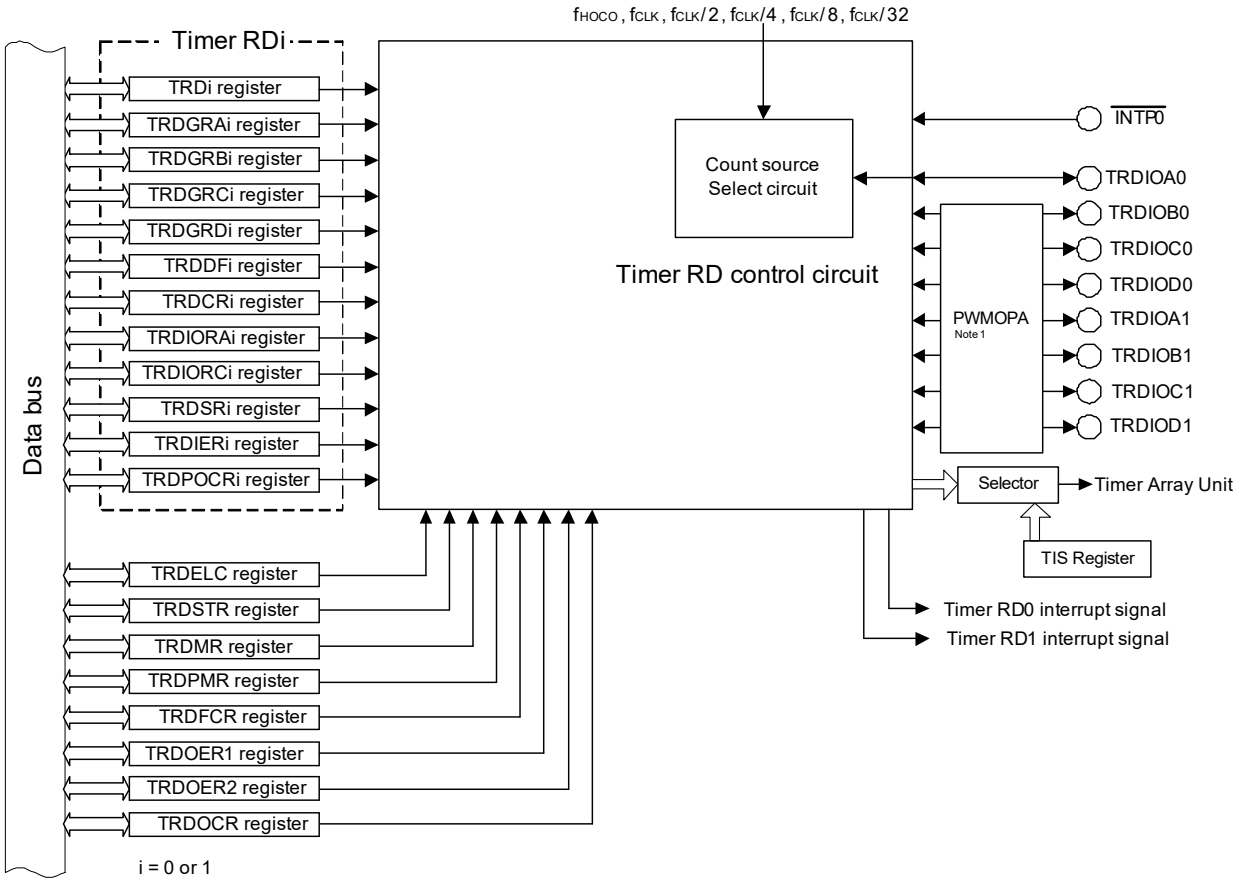

Note 1. Output signals can be cut off, while input signals cannot

Note Output signals can be cut off, while input signals cannot.

Remark i = 0 or 1

Table 8 - 1 Timer RD Pin Configuration

Pin Name	Alternate Port Name	I/O	Function
TRDIOA0/TRDCLK	P17	Input/Output	Function varies depending on the mode. Refer to descriptions of individual modes for details.
TRDIOB0	P15	Input/Output	
TRDIOC0	P16	Input/Output	
TRDIOD0	P14	Input/Output	
TRDIOA1	P13	Input/Output	
TRDIOB1	P12	Input/Output	
TRDIOC1	P11	Input/Output	
TRDIOD1	P10	Input/Output	

8.3 Registers Controlling Timer RD

Table 8 - 2 lists the Registers Controlling Timer RD.

Table 8 - 2 Registers Controlling Timer RD

Register Name	Symbol
Peripheral enable register 1	PER1
Timer RD ELC register	TRDELC
Timer RD start register	TRDSTR
Timer RD mode register	TRDMR
Timer RD PWM function select register	TRDPMR
Timer RD function control register	TRDFCR
Timer RD output master enable register 1	TRDOER1
Timer RD output master enable register 2	TRDOER2
Timer RD output control register	TRDOCR
Timer RD digital filter function select register 0	TRDDF0
Timer RD digital filter function select register 1	TRDDF1
Timer RD control register 0	TRDCR0
Timer RD I/O control register A0	TRDIORA0
Timer RD I/O control register C0	TRDIORC0
Timer RD status register 0	TRDSR0
Timer RD interrupt enable register 0	TRDIER0
Timer RD PWM function output level control register 0	TRDPOCR0
Timer RD counter 0	TRD0
Timer RD general register A0	TRDGRA0
Timer RD general register B0	TRDGRB0
Timer RD general register C0	TRDGRC0
Timer RD general register D0	TRDGRD0
Timer RD control register 1	TRDCR1
Timer RD I/O control register A1	TRDIORA1
Timer RD I/O control register C1	TRDIORC1
Timer RD status register 1	TRDSR1
Timer RD interrupt enable register 1	TRDIER1
Timer RD PWM function output level control register 1	TRDPOCR1
Timer RD counter 1	TRD1
Timer RD general register A1	TRDGRA1
Timer RD general register B1	TRDGRB1
Timer RD general register C1	TRDGRC1
Timer RD general register D1	TRDGRD1
Port register 1	P1
Port mode register 1	PM1

8.3.1 Peripheral enable register 1 (PER1)

The PER1 register is used to enable or disable supplying the clock to the peripheral hardware. Clock supply to the hardware that is not used is also stopped so as to decrease the power consumption and noise.

To use timer RD, be sure to set bit 4 (TRD0EN) to 1.

The PER1 register can be set by a 1-bit or 8-bit memory manipulation instruction.

Reset signal generation clears this register to 00H.

Figure 8 - 2 Format of Peripheral enable register 1 (PER1)

Address: F007AH After Reset: 00H R/W

Symbol	7	6	5	4	3	2	1	0
PER1	DACEN	TRGEN	PGACMPEN	TRD0EN	DTCEN	PWMOPEN	TRXEN	TRJ0EN

TRD0EN	Control of timer RD input clock supply
0	Stops input clock supply. • SFR used by timer RD cannot be written. • Timer RD is in the reset status.
1	Enables input clock supply. • SFR used by timer RD can be read and written.

PWMOPEN	Control of PWMOPA input clock supply
0	Stops input clock supply. • SFR used by PWMOPA cannot be written. • PWMOPA is in the reset status.
1	Enables input clock supply. • SFR used by PWMOPA can be read and written.

Caution 1. When setting timer RD, be sure to set the TRD0EN bit to 1 first. If TRD0EN = 0, writing to a control register of timer RD is ignored, and all read values are default values (except for port mode register 1 (PM1), and port register 1 (P1)).

Caution 2. When selecting f_{HOCO} as the count source for timer RD, set f_{CLK} to f_{IH} before setting bit 4 (TRD0EN) in peripheral enable register 1 (PER1). When changing f_{CLK} to a clock other than f_{IH}, clear bit 4 (TRD0EN) in peripheral enable register 1 (PER1) before changing.

Caution 3. When setting PWMOPA, be sure to set the PWMOPEN bit to 1 first. If PWMOPEN = 0, writing to a control register of PWMOPA is ignored, and all read values are default values. For PWMOPA, see 8.8 PWM Option Unit A (PWMOPA).

8.3.2 Timer RD ELC register (TRDELC)

Figure 8 - 3 Format of Timer RD ELC register (TRDELC)

Address: F0260H After Reset: 00H[Note] R/W

Symbol	7	6	5	4	3	2	1	0
TRDELC	0	0	ELCOBE1	ELCICE1	0	0	ELCOBE0	ELCICE0

ELCOBE1	ELC event input 1 enable for timer RD pulse output forced cutoff
0	Forced cutoff is disabled
1	Forced cutoff is enabled

ELCICE1	ELC event input 1 select for timer RD input capture D1
0	TRDIOD1 input capture is selected
1	Event input 1 from the event link controller (ELC) is selected

ELCOBE0	ELC event input 0 enable for timer RD pulse output forced cutoff
0	Forced cutoff is disabled
1	Forced cutoff is enabled

ELCICE0	ELC event input 0 select for timer RD input capture D0
0	TRDIOD0 input capture is selected
1	Event input 0 from the event link controller (ELC) is selected

Note The value after reset is undefined when FRQSEL4 = 1 in the user option byte (000C2H/010C2H) and TRD0EN = 0 in the PER1 register. If it is necessary to read the initial value, set f_{CLK} to f_{IH} and TRD0EN = 1 before reading.

8.3.3 Timer RD start register (TRDSTR)

The TRDSTR register can be set by an 8-bit memory manipulation instruction. See **8.7.1 (1) TRDSTR Register**.

Figure 8 - 4 Format of Timer RD start register (TRDSTR)

Address: F0263H After Reset: 0CH[Note 1] R/W

Symbol	7	6	5	4	3	2	1	0
TRDSTR	0	0	0	0	CSEL1	CSEL0	TSTART1	TSTART0

CSEL1	TRD1 count operation select[Note 2]
0	Count stops at compare match with TRDGRA1 register
1	Count continues after compare match with TRDGRA1 register[Note 3]

CSEL0	TRD0 count operation select
0	Count stops at compare match with TRDGRA0 register
1	Count continues after compare match with TRDGRA0 register[Note 3]

TSTART1	TRD1 count start flag[Notes 4, 5]
0	Count stops
1	Count starts

TSTART0	TRD0 count start flag[Notes 6, 7]
0	Count stops
1	Count starts

Note 1. The value after reset is undefined when FRQSEL4 = 1 in the user option byte (000C2H/010C2H) and TRD0EN = 0 in the PER1 register. If it is necessary to read the initial value, set f_{CLK} to f_{IH} and TRD0EN = 1 before reading.

Note 2. Do not use in PWM3 mode.

Note 3. Set to 1 for the input capture function.

Note 4. Write 0 to the TSTART1 bit while the CSEL1 bit is set to 1.

Note 5. When the CSEL1 bit is 0 and a compare match signal (TRDIOA1) is generated, this flag is set to 0 (count stops).

Note 6. Write 0 to the TSTART0 bit while the CSEL0 bit is set to 1.

Note 7. When the CSEL0 bit is 0 and a compare match signal (TRDIOA0) is generated, this flag is set to 0 (count stops).

8.3.4 Timer RD mode register (TRDMR)

Figure 8 - 5 Format of Timer RD mode register (TRDMR)

Address: F0264H After Reset: 00H[Note 1] R/W

Symbol	7	6	5	4	3	2	1	0
TRDMR	TRDBFD1	TRDBFC1	TRDBFD0	TRDBFC0	0	0	0	TRDSYNC

TRDBFD1	TRDGRD1 register function select[Note 2]
0	General register
1	Buffer register for TRDGRB1 register

TRDBFC1	TRDGRC1 register function select[Note 2]
0	General register
1	Buffer register for TRDGRA1 register

TRDBFD0	TRDGRD0 register function select[Note 2]
0	General register
1	Buffer register for TRDGRB0 register

TRDBFC0	TRDGRC0 register function select[Notes 2, 3]
0	General register
1	Buffer register for TRDGRA0 register

TRDSYNC	Timer RD synchronous[Note 4]
0	TRD0 and TRD1 operate independently
1	TRD0 and TRD1 operate synchronously

Note 1. The value after reset is undefined when FRQSEL4 = 1 in the user option byte (000C2H/010C2H) and TRD0EN = 0 in the PER1 register. If it is necessary to read the initial value, set f_{CLK} to f_{IH} and TRD0EN = 1 before reading.

Note 2. In the output compare function, if 0 (TRDGRji register output pin is changed) is selected for the IOj3 (j = C or D) bit in the TRDIORCi (i = 0 or 1) register, set the TRDBFji bit in the TRDMR register to 0.

Note 3. Set to 0 (general register) in complementary PWM mode.

Note 4. Set to 0 (TRD0 and TRD1 operate independently) in reset synchronous PWM mode, complementary PWM mode, and PWM3 mode.

8.3.5 Timer RD PWM function select register (TRDPMR)

Figure 8 - 6 Format of Timer RD PWM function select register (TRDPMR) [Timer Mode]

Address: F0265H After Reset: 00H[Note] R/W

Symbol	7	6	5	4	3	2	1	0
TRDPMR	0	TRDPWMD1	TRDPWMC1	TRDPWMB1	0	TRDPWMD0	TRDPWMC0	TRDPWMB0

TRDPWMD1	PWM function of TRDIOD1 select
0	Input capture function or output compare function
1	PWM function

TRDPWMC1	PWM function of TRDIOC1 select
0	Input capture function or output compare function
1	PWM function

TRDPWMB1	PWM function of TRDIOB1 select
0	Input capture function or output compare function
1	PWM function

TRDPWMD0	PWM function of TRDIOD0 select
0	Input capture function or output compare function
1	PWM function

TRDPWMC0	PWM function of TRDIOC0 select
0	Input capture function or output compare function
1	PWM function

TRDPWMB0	PWM function of TRDIOB0 select
0	Input capture function or output compare function
1	PWM function

Note The value after reset is undefined when FRQSEL4 = 1 in the user option byte (000C2H/010C2H) and TRD0EN = 0 in the PER1 register. If it is necessary to read the initial value, set f_{CLK} to f_{IH} and TRD0EN = 1 before reading.

8.3.6 Timer RD function control register (TRDFCR)

Figure 8 - 7 Format of Timer RD function control register (TRDFCR)

Address: F0266H After Reset: 80H[Note 1] R/W

Symbol	7	6	5	4	3	2	1	0
TRDFCR	PWM3	STCLK	0	0	OLS1	OLS0	CMD1	CMD0

PWM3	PWM3 mode select [Note 2]
• In the timer mode, set to 1 (other than PWM3 mode). • In PWM3 mode, set to 0 (PWM3 mode). • Disabled in reset synchronous and complementary PWM modes.	

STCLK	External clock input select
• In the timer mode, the reset synchronous PWM mode, and the complementary PWM mode, 0: External clock input disabled 1: External clock input enabled • In PWM3 mode, set to 0 (external clock input disabled).	

OLS1	Counter-phase output level select (in reset synchronous PWM mode or complementary PWM mode)
• In reset synchronous and complementary PWM modes, 0: High initial output and low active level 1: Low initial output and high active level • Disabled in timer and PWM3 modes.	

OLS0	Phase output level select (in reset synchronous PWM mode or complementary PWM mode)
• In reset synchronous and complementary PWM modes, 0: High initial output and low active level 1: Low initial output and high active level • Disabled in timer and PWM3 modes.	

CMD1	CMD0	Combination mode select [Notes 3, 4]
• In timer and PWM3 modes, set to 00B (timer mode or PWM3 mode). • In reset synchronous PWM mode, set to 01B (reset synchronous PWM mode). • In complementary PWM mode, CMD1 CMD0 1 0: Complementary PWM mode (transfer from the buffer register to the general register when TRD1 underflows) 1 1: Complementary PWM mode (transfer from the buffer register to the general register at compare match between registers TRD0 and TRDGRA0) Other than the above: Setting prohibited.		

Note 1. The value after reset is undefined when FRQSEL4 = 1 in the user option byte (000C2H/010C2H) and TRD0EN = 0 in the PER1 register. If it is necessary to read the initial value, set f_{CLK} to f_{IH} and TRD0EN = 1 before reading.

Note 2. When bits CMD1 and CMD0 are set to 00B (timer mode or PWM3 mode), the setting of the PWM3 bit is enabled.

Note 3. Set bits CMD0 and CMD1 when both the TSTART0 and TSTART1 bits in the TRDSTR register are set to 0 (count stops).

Note 4. When bits CMD1 and CMD0 are set to 01B, 10B, or 11B, the MCU enters reset synchronous PWM mode or complementary PWM mode regardless of the settings of the TRDPMR register.

8.3.7 Timer RD output master enable register 1 (TRDOER1)

Figure 8 - 8 Format of Timer RD output master enable register 1 (TRDOER1) [Output Compare Function, PWM Function, Reset Synchronous PWM Mode, Complementary PWM Mode, and PWM3 Mode]

Address: F0267H After Reset: FFH[Note 1] R/W

Symbol	7	6	5	4	3	2	1	0
TRDOER1	ED1	EC1	EB1	EA1	ED0	EC0	EB0	EA0

ED1	TRDIOD1 output disable[Note 2]
0	Output enabled
1	Output disabled (TRDIOD1 pin functions as an I/O port.)

EC1	TRDIOC1 output disable[Note 2]
0	Output enabled
1	Output disabled (TRDIOC1 pin functions as an I/O port.)

EB1	TRDIOB1 output disable[Note 2]
0	Output enabled
1	Output disabled (TRDIOB1 pin functions as an I/O port.)

EA1	TRDIOA1 output disable[Notes 2, 3]
0	Output enabled
1	Output disabled (TRDIOA1 pin functions as an I/O port)

ED0	TRDIOD0 output disable[Note 2]
0	Output enabled
1	Output disabled (TRDIOD0 pin functions as an I/O port.)

EC0	TRDIOC0 output disable[Note 2]
0	Output enabled
1	Output disabled (TRDIOC0 pin functions as an I/O port.)

EB0	TRDIOB0 output disable
0	Output enabled
1	Output disabled (TRDIOB0 pin functions as an I/O port.)

EA0	TRDIOA0 output disable[Notes 3, 4]
0	Output enabled
1	Output disabled (TRDIOA0 pin functions as an I/O port)

Note 1. The value after reset is undefined when FRQSEL4 = 1 in the user option byte (000C2H/010C2H) and TRD0EN = 0 in the PER1 register. If it is necessary to read the initial value, set f_{CLK} to f_{IH} and TRD0EN = 1 before reading.

Note 2. Set to 1 in PWM3 mode.

Note 3. Set to 1 in PWM function.

Note 4. Set to 1 in reset synchronous PWM mode and complementary PWM mode.

Caution **When HAZAD_SET=1 (hazard measure enabled) is set for OPCTL0, the TRDOER1 register can be changed during count operation of timer RD. (The TRDIO pin and PORT are switched during operation of timer RD.)**

8.3.8 Timer RD output master enable register 2 (TRDOER2)

Figure 8 - 9 Format of Timer RD output master enable register 2 (TRDOER2)
[PWM Function, Reset Synchronous PWM Mode, Complementary PWM Mode, and PWM3 Mode]

Address: F0268H After Reset: 00H[Note 1] R/W

Symbol	7	6	5	4	3	2	1	0
TRDOER2	TRDPTO	0	0	0	0	0	0	TRDSHUTS

TRDPTO	INTP0 pin of pulse output forced cutoff signal input enabled[Note 2]
0	Pulse output forced cutoff input disabled
1	Pulse output forced cutoff input enabled (The TRDSHUTS bit is set to 1 when a low level is applied to the INTP0 pin.)

TRDSHUTS	Forced cutoff flag
0	Not forcibly cut off
1	Forcibly cut off
This bit is set to 1 when the pulse is forcibly cut off by an INTP0 pin or ELC input event. This bit is not automatically cleared. To stop the forced cutoff of the pulse, write 0 to this bit while the count is stopped (TSTARTi = 0). The pulse is also forcibly cut off when 1 is written to the TRDSHUTS bit in an enabled mode.	

Note 1. The value after reset is undefined when FRQSEL4 = 1 in the user option byte (000C2H/010C2H) and TRD0EN = 0 in the PER1 register. If it is necessary to read the initial value, set f_{CLK} to f_{IH} and TRD0EN = 1 before reading.

Note 2. See **8.4.4 Pulse Output Forced Cutoff**.

8.3.9 Timer RD output control register (TRDOCR)

Write to the TRDOCR register when bits TSTART0 and TSTART1 in the TRDSTR register are both 0 (count stops).

Figure 8 - 10 Format of Timer RD output control register (TRDOCR) [Output Compare Function]

Address: F0269H After Reset: 00H[Note 1] R/W

Symbol	7	6	5	4	3	2	1	0
TRDOCR	TOD1	TOC1	TOB1	TOA1	TOD0	TOC0	TOB0	TOA0

TOD1	TRDIOD1 initial output level select[Note 2]
0	Low initial output
1	High initial output

TOC1	TRDIOC1 initial output level select[Note 2]
0	Low initial output
1	High initial output

TOB1	TRDIOB1 initial output level select[Note 2]
0	Low initial output
1	High initial output

TOA1	TRDIOA1 initial output level select[Note 2]
0	Low initial output
1	High initial output

TOD0	TRDIOD0 initial output level select[Note 2]
0	Low initial output
1	High initial output

TOC0	TRDIOC0 initial output level select[Note 2]
0	Low initial output
1	High initial output

TOB0	TRDIOB0 initial output level select[Note 2]
0	Low initial output
1	High initial output

TOA0	TRDIOA0 initial output level selec[Note 2]
0	Low initial output
1	High initial output

Note 1. The value after reset is undefined when FRQSEL4 = 1 in the user option byte (000C2H/010C2H) and TRD0EN = 0 in the PER1 register. If it is necessary to read the initial value, set f_{CLK} to f_{IH} and TRD0EN = 1 before reading.

Note 2. If the pin function is set for waveform output, the initial output level is output when the TRDOCR register is set.

Figure 8 - 11 Format of Timer RD output control register (TRDOCR) [PWM Function]

Address: F0269H After Reset: 00H[Note 1] R/W

Symbol	7	6	5	4	3	2	1	0
TRDOCR	TOD1	TOC1	TOB1	TOA1	TOD0	TOC0	TOB0	TOA0

TOD1	TRDIOD1 initial output level select[Note 2]
0	Initial output is not active level
1	Initial output is active level

TOC1	TRDIOC1 initial output level select[Note 2]
0	Initial output is not active level
1	Initial output is active level

TOB1	TRDIOB1 initial output level select[Note 2]
0	Initial output is not active level
1	Initial output is active level

TOA1	TRDIOA1 initial output level select[Note 2]
Set to 0.	

TOD0	TRDIOD0 initial output level select[Note 2]
0	Initial output is not active level
1	Initial output is active level

TOC0	TRDIOC0 initial output level select[Note 2]
0	Initial output is not active level
1	Initial output is active level

TOB0	TRDIOB0 initial output level select[Note 2]
0	Initial output is not active level
1	Initial output is active level

TOA0	TRDIOA0 initial output level select[Note 2]
Set to 0.	

Note 1. TRD0EN = 0 in the PER1 register. If it is necessary to read the initial value, set f_{CLK} to f_{IH} and TRD0EN = 1 before reading.

Note 2. If the pin function is set for waveform output, the initial output level is output when the TRDOCR register is set.

Figure 8 - 12 Format of Timer RD output control register (TRDOCR)
[Reset Synchronous PWM Mode, Complementary PWM Mode]

Address: F0269H After Reset: 00H Note 1 R/W

Symbol	7	6	5	4	3	2	1	0
TRDOCR	TOD1	TOC1	TOB1	TOA1	TOD0	TOC0	TOB0	TOA0

TOD1, TOC1, TOB1, TOA1, TOD0, TOB0, TOA0	Setting these bits to 1 is invalid in the reset synchronous PWM mode and complementary PWM mode. Be sure to set these bits to 0. In the reset synchronous PWM mode and complementary PWM mode, the setting of the OLS1 and OLS0 bits in TRDFCR determine the initial level independently of the setting in these bits.

TOC0	TRDIOC0 initial output level select Note 2	
0	Initial output L	In the reset synchronous PWM mode, the output is inverted every PWM period. In complementary PWM mode, the output is inverted every 1/2 PWM period.
1	Initial output H	

Note 1. The value after reset is undefined when FRQSEL4 = 1 in the user option byte (000C2H) and TRD0EN = 0 in the PER1 register. If it is necessary to read the initial value, set f_{CLK} to f_{IH} and TRD0EN = 1 before reading.

Note 2. If the pin function is set for waveform output, the initial output level is output when the TRDOCR register is set.

Figure 8 - 13 Format of Timer RD output control register (TRDOCR) [PWM3 Mode]

Address: F0269H After Reset: 00H[Note 1] R/W

Symbol	7	6	5	4	3	2	1	0
TRDOCR	TOD1	TOC1	TOB1	TOA1	TOD0	TOC0	TOB0	TOA0

TOD1	TRDIOD1 initial output level select
Disabled in PWM3 mode.	

TOC1	TRDIOC1 initial output level select
Disabled in PWM3 mode.	

TOB1	TRDIOB1 initial output level select
Disabled in PWM3 mode.	

TOA1	TRDIOA1 initial output level select
Disabled in PWM3 mode.	

TOD0	TRDIOD0 initial output level select
Disabled in PWM3 mode.	

TOC0	TRDIOC0 initial output level select
Disabled in PWM3 mode.	

TOB0	TRDIOB0 initial output level select[Note 2]
0	Low initial output, high active level, high output at TRDGRB1 compare match, and low output at TRDGRB0 compare match
1	High initial output, low active level, low output at TRDGRB1 compare match, and high output at TRDGRB0 compare match

TOA0	TRDIOA0 initial output level select[Note 2]
0	Low initial output, high active level, high output at TRDGRA1 compare match, and low output at TRDGRA0 compare match
1	High initial output, low active level, low output at TRDGRA1 compare match, and high output at TRDGRA0 compare match

Note 1. The value after reset is undefined when FRQSEL4 = 1 in the user option byte (000C2H/010C2H) and TRD0EN = 0 in the PER1 register. If it is necessary to read the initial value, set f_{CLK} to f_{IH} and TRD0EN = 1 before reading.

Note 2. If the pin function is set for waveform output, the initial output level is output when the TRDOCR register is set.

8.3.10 Timer RD digital filter function select register i (TRDDFi) (i = 0 or 1)

Figure 8 - 14 Format of Timer RD digital filter function select register i (TRDDFi) (i = 0 or 1)
[Input Capture Function]

Address: F026AH (TRDDF0), F026BH (TRDDF1) After Reset: 00H[Note 1] R/W

Symbol	7	6	5	4	3	2	1	0
TRDDFi	DFCK1	DFCK0	PENB1	PENB0	DFD	DFC	DFB	DFA

DFCK1	DFCK0	Clock select for digital filter function[Note 2]
0	0	$f_{CLK}/32$[Note 3]
0	1	$f_{CLK}/8$[Note 3]
1	0	f_{CLK}[Note 3]
1	1	Count source (clock selected by bits TCK0 to TCK2 in the TRDCRi register)

PENB1	PENB0	TRDIOB pin pulse forced cutoff control
0	0	Set to 00B.

DFD	TRDIODi pin digital filter function select
0	Digital filter function disabled
1	Digital filter function enabled
When the digital filter is enabled, edge detection is performed after up to five cycles of the digital filter sampling clock.	

DFC	TRDIOCi pin digital filter function select
0	Digital filter function disabled
1	Digital filter function enabled
When the digital filter is enabled, edge detection is performed after up to five cycles of the digital filter sampling clock.	

DFB	TRDIOBi pin digital filter function select
0	Digital filter function disabled
1	Digital filter function enabled
When the digital filter is enabled, edge detection is performed after up to five cycles of the digital filter sampling clock.	

DFA	TRDIOAi pin digital filter function select
0	Digital filter function disabled
1	Digital filter function enabled
When the digital filter is enabled, edge detection is performed after up to five cycles of the digital filter sampling clock.	

Note 1. The value after reset is undefined when FRQSEL4 = 1 in the user option byte (000C2H/010C2H) and The value after reset is undefined when FRQSEL4 = 1 in the user option byte (000C2H/010C2H) and TRD0EN = 0 in the PER1 register. If it is necessary to read the initial value, set f_{CLK} to f_{IH} and TRD0EN = 1 before reading.

Note 2. Set bits DFCK0 and DFCK1 before starting count operation.

Note 3. When FRQSEL4 = 1 in the user option byte (000C2H/010C2H), $f_{CLK}/32$, $f_{CLK}/8$, and f_{CLK} are set to $f_{HOCO}/32$, $f_{HOCO}/8$, and f_{HOCO}, respectively.

Figure 8 - 15 Format of Timer RD digital filter function select register i (TRDDFi) (i = 0 or 1)
[PWM Function, Reset Synchronous PWM Mode, Complementary PWM Mode, and PWM3 Mode]

Address: F026AH (TRDDF0), F026BH (TRDDF1) After Reset: 00H[Note] R/W

Symbol	7	6	5	4	3	2	1	0
TRDDFi	DFCK1	DFCK0	PENB1	PENB0	DFD	DFC	DFB	DFA

DFCK1	DFCK0	TRDIOA pin pulse forced cutoff control
0	0	Forced cutoff disabled
0	1	High-impedance output
1	0	Low output
1	1	High output
Set these bits to 00B (forced cutoff disabled) if the corresponding pin is not used as a timer RD output port in these modes. Also, set these bits while the count is stopped.		

PENB1	PENB0	TRDIOB pin pulse forced cutoff control
0	0	Forced cutoff disabled
0	1	High-impedance output
1	0	Low output
1	1	High output
Set these bits to 00B (forced cutoff disabled) if the corresponding pin is not used as a timer RD output port in these modes. Also, set these bits while the count is stopped.		

DFD	DFC	TRDIOC pin pulse forced cutoff control
0	0	Forced cutoff disabled
0	1	High-impedance output
1	0	Low output
1	1	High output
Set these bits to 00B (forced cutoff disabled) if the corresponding pin is not used as a timer RD output port in these modes. Also, set these bits while the count is stopped.		

DFB	DFA	TRDIOD pin pulse forced cutoff control
0	0	Forced cutoff disabled
0	1	High-impedance output
1	0	Low output
1	1	High output
Set these bits to 00B (forced cutoff disabled) if the corresponding pin is not used as a timer RD output port in these modes. Also, set these bits while the count is stopped.		

Note TRD0EN = 0 in the PER1 register. If it is necessary to read the initial value, set f_{CLK} to f_{IH} and TRD0EN = 1 before reading.

8.3.11 Timer RD control register i (TRDCRi) (i = 0 or 1)

The TRDCR1 register is not used in reset synchronous PWM mode or PWM3 mode.

Figure 8 - 16 Format of Timer RD control register i (TRDCRi) (i = 0 or 1)
[Input Capture Function and Output Compare Function]

Address: F0270H (TRDCR0), F0280H (TRDCR1) After Reset: 00H[Note 1] R/W

Symbol	7	6	5	4	3	2	1	0
TRDCRi	CCLR2	CCLR1	CCLR0	CKEG1	CKEG0	TCK2	TCK1	TCK0

CCLR2	CCLR1	CCLR0	TRDi counter clear select
0	0	0	Clear disabled (free-running operation)
0	0	1	Clear by input capture/compare match with TRDGRAi
0	1	0	Clear by input capture/compare match with TRDGRBi
0	1	1	Synchronous clear (clear simultaneously with other timer RDi counter) Note 2
1	0	1	Clear by input capture/compare match with TRDGRCi
1	1	0	Clear by input capture/compare match with TRDGRDi
Other than above			Setting prohibited

CKEG1	CKEG0	External clock edge select[Note 3]
0	0	Count at the rising edge
0	1	Count at the falling edge
1	0	Count at both edges
Other than above		Setting prohibited

TCK2	TCK1	TCK0	Count source select
0	0	0	f_{CLK}, f_{HOCO}[Note 4]
0	0	1	$f_{CLK}/2$[Note 5]
0	1	0	$f_{CLK}/4$[Note 5]
0	1	1	$f_{CLK}/8$[Note 5]
1	0	0	$f_{CLK}/32^N$[Note 5]
1	0	1	TRDCLK input[Note 6]
Other than above			Setting prohibited

Note 1. The value after reset is undefined when FRQSEL4 = 1 in the user option byte (000C2H/010C2H) and TRD0EN = 0 in the PER1 register. If it is necessary to read the initial value, set f_{CLK} to f_{IH} and TRD0EN = 1 before reading.

Note 2. Enabled when the TRDSYNC bit in the TRDMR register is 1 (TRD0 and TRD1 operate synchronously).

Note 3. Valid when bits TCK2 to TCK0 are set to 101B (TRDCLK input) and the STCLK bit is set to 1 (external clock input enabled).

Note 4. f_{CLK} is selected when FRQSEL4 = 0 and f_{HOCO} is selected when FRQSEL4 = 1 in the user option byte (000C2H/010C2H). When selecting f_{HOCO} as the count source for timer RD, set f_{CLK} to f_{IH} before setting bit 4 (TRD0EN) in peripheral enable register 1 (PER1). When changing f_{CLK} to a clock other than f_{IH}, clear bit 4 (TRD0EN) in peripheral enable register 1 (PER1) before changing.

Note 5. Do not set this value when FRQSEL4 = 1 in the user option byte (000C2H/010C2H).

Note 6. Valid when the STCLK bit in the TRDFCR register is set to 1 (external clock input enabled).

Figure 8 - 17 Format of Timer RD control register i (TRDCRi) (i = 0 or 1) [PWM Mode]

Address: F0270H (TRDCR0), F0280H (TRDCR1) After Reset: 00H[Note 1] R/W

Symbol	7	6	5	4	3	2	1	0
TRDCRi	CCLR2	CCLR1	CCLR0	CKEG1	CKEG0	TCK2	TCK1	TCK0

CCLR2	CCLR1	CCLR0	TRDi counter clear select
Set to 001B (TRDi register is cleared at compare match with TRDGRAi register).			

CKEG1	CKEG0	External clock edge select[Note 2]
0	0	Count at the rising edge
0	1	Count at the falling edge
1	0	Count at both edges
Other than above		Setting prohibited

TCK2	TCK1	TCK0	Count source select
0	0	0	f_{CLK}, f_{HOCO}[Note 3]
0	0	1	$f_{CLK}/2$[Note 4]
0	1	0	$f_{CLK}/4$[Note 4]
0	1	1	$f_{CLK}/8$[Note 4]
1	0	0	$f_{CLK}/32^N$[Note 4]
1	0	1	TRDCLK input[Note 5]
Other than above			Setting prohibited

Note 1. The value after reset is undefined when FRQSEL4 = 1 in the user option byte (000C2H/010C2H) and TRD0EN = 0 in the PER1 register. If it is necessary to read the initial value, set f_{CLK} to f_{IH} and TRD0EN = 1 before reading.

Note 2. Valid when bits TCK2 to TCK0 are set to 101B (TRDCLK input) and the STCLK bit is set to 1 (external clock input enabled).

Note 3. f_{CLK} is selected when FRQSEL4 = 0 and f_{HOCO} is selected when FRQSEL4 = 1 in the user option byte (000C2H/010C2H). When selecting f_{HOCO} as the count source for timer RD, set f_{CLK} to f_{IH} before setting bit 4 (TRD0EN) in peripheral enable register 1 (PER1). When changing f_{CLK} to a clock other than f_{IH}, clear bit 4 (TRD0EN) in peripheral enable register 1 (PER1) before changing.

Note 4. Do not set this value when FRQSEL4 = 1 in the user option byte (000C2H/010C2H).

Note 5. Valid when the STCLK bit in the TRDFCR register is set to 1 (external clock input enabled).

Figure 8 - 18 Format of Timer RD control register 0 (TRDCR0) [Reset Synchronous PWM Mode]

Address: F0270H After Reset: 00H[Note 1] R/W

Symbol	7	6	5	4	3	2	1	0
TRDCR0	CCLR2	CCLR1	CCLR0	CKEG1	CKEG0	TCK2	TCK1	TCK0

CCLR2	CCLR1	CCLR0	TRD0 counter clear select
Set to 001B (TRD0 register is cleared at compare match with TRDGRA0 register).			

CKEG1	CKEG0	External clock edge select[Note 2]
0	0	Count at the rising edge
0	1	Count at the falling edge
1	0	Count at both edges
Other than above		Setting prohibited

TCK2	TCK1	TCK0	Count source select
0	0	0	f_{CLK}, f_{HOCO}[Note 3]
0	0	1	$f_{CLK}/2$[Note 4]
0	1	0	$f_{CLK}/4$[Note 4]
0	1	1	$f_{CLK}/8$[Note 4]
1	0	0	$f_{CLK}/32$[Note 4]
1	0	1	TRDCLK input[Note 5]
Other than above			Setting prohibited

Note 1. The value after reset is undefined when FRQSEL4 = 1 in the user option byte (000C2H/010C2H) and TRD0EN = 0 in the PER1 register. If it is necessary to read the initial value, set f_{CLK} to f_{IH} and TRD0EN = 1 before reading.

Note 2. Valid when bits TCK2 to TCK0 are set to 101B (TRDCLK input) and the STCLK bit is set to 1 (external clock input enabled).

Note 3. f_{CLK} is selected when FRQSEL4 = 0 and f_{HOCO} is selected when FRQSEL4 = 1 in the user option byte (000C2H/010C2H). When selecting f_{HOCO} as the count source for timer RD, set f_{CLK} to f_{IH} before setting bit 4 (TRD0EN) in peripheral enable register 1 (PER1). When changing f_{CLK} to a clock other than f_{IH}, clear bit 4 (TRD0EN) in peripheral enable register 1 (PER1) before changing.

Note 4. Do not set this value when FRQSEL4 = 1 in the user option byte (000C2H/010C2H).

Note 5. Valid when the STCLK bit in the TRDFCR register is set to 1 (external clock input enabled).

Figure 8 - 19 Format of Timer RD control register i (TRDCRi)(i=0,1)[Complementary PWM Mode]

Address: F0270H (TRDCR0), F0280H (TRDCR1) After Reset: 00H[Note 1] R/W

Symbol	7	6	5	4	3	2	1	0
TRDCRi	CCLR2	CCLR1	CCLR0	CKEG1	CKEG0	TCK2	TCK1	TCK0

CCLR2	CCLR1	CCLR0	TRD0 counter clear select
Set to 000B (clear disabled (free-running operation)).			

CKEG1	CKEG0	External clock edge select[Notes 2, 3]
0	0	Count at the rising edge
0	1	Count at the falling edge
1	0	Count at both edges
Other than above		Setting prohibited

TCK2	TCK1	TCK0	Count source select
0	0	0	f_{CLK}, f_{HOCO}[Note 4]
0	0	1	$f_{CLK}/2$[Note 5]
0	1	0	$f_{CLK}/4$[Note 5]
0	1	1	$f_{CLK}/8$[Note 5]
1	0	0	$f_{CLK}/32$[Note 5]
1	0	1	TRDCLK input[Note 6]
Other than above			Setting prohibited

Note 1. The value after reset is undefined when FRQSEL4 = 1 in the user option byte (000C2H/010C2H) and TRD0EN = 0 in the PER1 register. If it is necessary to read the initial value, set f_{CLK} to f_{IH} and TRD0EN = 1 before reading.

Note 2. Valid when bits TCK2 to TCK0 are set to 101B (TRDCLK input) and the STCLK bit is set to 1 (external clock input enabled).

Note 3. Set the same value to bits TCK0 to TCK2, CKEG0, and CKEG1 in registers TRDCR0 and TRDCR1.

Note 4. f_{CLK} is selected when FRQSEL4 = 0 and f_{HOCO} is selected when FRQSEL4 = 1 in the user option byte (000C2H/010C2H). When selecting f_{HOCO} as the count source for timer RD, set f_{CLK} to f_{IH} before setting bit 4 (TRD0EN) in peripheral enable register 1 (PER1). When changing f_{CLK} to a clock other than f_{IH}, clear bit 4 (TRD0EN) in peripheral enable register 1 (PER1) before changing.

Note 5. Do not set this value when FRQSEL4 = 1 in the user option byte (000C2H/010C2H).

Note 6. Valid when the STCLK bit in the TRDFCR register is set to 1 (external clock input enabled).

Figure 8 - 20 Format of Timer RD control register 0 (TRDCR0) [PWM3 Mode]

Address: F0270H After Reset: 00H[Note 1] R/W

Symbol	7	6	5	4	3	2	1	0
TRDCR0	CCLR2	CCLR1	CCLR0	CKEG1	CKEG0	TCK2	TCK1	TCK0

CCLR2	CCLR1	CCLR0	TRD0 counter clear select
Set to 001B (TRD0 register is cleared at compare match with TRDGRA0 register).			

CKEG1	CKEG0	External clock edge select
Disabled in PWM3 mode.		

TCK2	TCK1	TCK0	Count source select
0	0	0	f_{CLK}, f_{HOCO}[Note 2]
0	0	1	$f_{CLK}/2$[Note 3]
0	1	0	$f_{CLK}/4$[Note 3]
0	1	1	$f_{CLK}/8$[Note 3]
1	0	0	$f_{CLK}/32$[Note 3]
Other than above			Setting prohibited

Note 1. The value after reset is undefined when FRQSEL4 = 1 in the user option byte (000C2H/010C2H) and TRD0EN = 0 in the PER1 register. If it is necessary to read the initial value, set f_{CLK} to f_{IH} and TRD0EN = 1 before reading.

Note 2. f_{CLK} is selected when FRQSEL4 = 0 and f_{HOCO} is selected when FRQSEL4 = 1 in the user option byte (000C2H/010C2H). When selecting f_{HOCO} as the count source, select f_{IH} as f_{CLK} before starting timer count operation.

Note 3. Do not set this value when FRQSEL4 = 1 in the user option byte (000C2H/010C2H).

8.3.12 Timer RD I/O control register Ai (TRDIORAi) (i = 0 or 1)

Figure 8 - 21 Format of Timer RD I/O control register Ai (TRDIORAi) (i = 0 or 1) [Input Capture Function]

Address: F0271H (TRDIORA0), F0281H (TRDIORA1) After Reset: 00H[Note 1] R/W

Symbol	7	6	5	4	3	2	1	0
TRDIORAi	0	IOB2	IOB1	IOB0	0	IOA2	IOA1	IOA0

IOB2	TRDGRB mode select[Note 2]
Set to 1 (input capture) in the input capture function.	

IOB1	IOB0	TRDGRB control
0	0	Input capture to TRDGRBi at the rising edge
0	1	Input capture to TRDGRBi at the falling edge
1	0	Input capture to TRDGRBi at both edges
Other than above		Setting prohibited

IOA2	TRDGRA mode select[Note 3]
Set to 1 (input capture) in the input capture function.	

IOA1	IOA0	TRDGRA control
0	0	Input capture to TRDGRAi at the rising edge
0	1	Input capture to TRDGRAi at the falling edge
1	0	Input capture to TRDGRAi at both edges
Other than above		Setting prohibited

Note 1. The value after reset is undefined when FRQSEL4 = 1 in the user option byte (000C2H/010C2H) and TRD0EN = 0 in the PER1 register. If it is necessary to read the initial value, set f_{CLK} to f_{IH} and TRD0EN = 1 before reading.

Note 2. If 1 (buffer register for TRDGRBi register) is selected for the TRDBFDi bit in the TRDMR register, set the same value to the IOB2 bit in the TRDIORAi register and the IOD2 bit in the TRDIORCi register.

Note 3. If 1 (buffer register for TRDGRAi register) is selected for the TRDBFCi bit in the TRDMR register, set the same value to the IOA2 bit in the TRDIORAi register and the IOC2 bit in the TRDIORCi register.

Figure 8 - 22 Format of Timer RD I/O control register Ai (TRDIORAi) (i = 0 or 1) [Output Compare Function]

Address: F0271H (TRDIORA0), F0281H (TRDIORA1) After Reset: 00H[Note 1] R/W

Symbol	7	6	5	4	3	2	1	0
TRDIORAi	0	IOB2	IOB1	IOB0	0	IOA2	IOA1	IOA0

IOB2	TRDGRB mode select[Note 2]
Set to 0 (output compare) in the output compare function.	

IOB1	IOB0	TRDGRB control
0	0	Pin output by compare match is disabled (TRDIOBi pin functions as an I/O port)
0	1	Low output by compare match with TRDGRBi
1	0	High output by compare match with TRDGRBi
1	1	Toggle output by compare match with TRDGRBi

IOA2	TRDGRA mode select[Note 3]
Set to 0 (output compare) in the output compare function.	

IOA1	IOA0	TRDGRA control
0	0	Pin output by compare match is disabled (TRDIOAi pin functions as an I/O port)
0	1	Low output by compare match with TRDGRAi
1	0	High output by compare match with TRDGRAi
1	1	Toggle output by compare match with TRDGRAi

Note 1. The value after reset is undefined when FRQSEL4 = 1 in the user option byte (000C2H/010C2H) and TRD0EN = 0 in the PER1 register. If it is necessary to read the initial value, set f_{CLK} to f_{IH} and TRD0EN = 1 before reading.

Note 2. If 1 (buffer register for TRDGRBi register) is selected for the TRDBFDi bit in the TRDMR register, set the same value to the IOB2 bit in the TRDIORAi register and the IOD2 bit in the TRDIORCi register.

Note 3. If 1 (buffer register for TRDGRAi register) is selected for the TRDBFCi bit in the TRDMR register, set the same value to the IOA2 bit in the TRDIORAi register and the IOC2 bit in the TRDIORCi register.

8.3.13 Timer RD I/O control register Ci (TRDIORCi) (i = 0 or 1)

Figure 8 - 23 Format of Timer RD I/O control register Ci (TRDIORCi) [Input Capture Function]

Address: F0272H (TRDIORC0), F0282H (TRDIORC1) After Reset: 88H[Note 1] R/W

Symbol	7	6	5	4	3	2	1	0
TRDIORCi	IOD3	IOD2	IOD1	IOD0	IOC3	IOC2	IOC1	IOC0

IOD3	TRDGRD register function select
Set to 1 (general register or buffer register) in the input capture function.	

IOD2	TRDGRD mode select[Note 2]
Set to 1 (input capture) in the input capture function.	

IOD1	IOD0	TRDGRD control
0	0	Input capture to TRDGRDi at the rising edge
0	1	Input capture to TRDGRDi at the falling edge
1	0	Input capture to TRDGRDi at both edges
Other than above		Setting prohibited

IOC3	TRDGRC register function select
Set to 1 (general register or buffer register) in the input capture function.	

IOC2	TRDGRC mode select[Note 3]
Set to 1 (input capture) in the input capture function.	

IOC1	IOC0	TRDGRC control
0	0	Input capture to TRDGRCi at the rising edge
0	1	Input capture to TRDGRCi at the falling edge
1	0	Input capture to TRDGRCi at both edges
Other than above		Setting prohibited

Note 1. The value after reset is undefined when FRQSEL4 = 1 in the user option byte (000C2H/010C2H) and TRD0EN = 0 in the PER1 register. If it is necessary to read the initial value, set f_{CLK} to f_{IH} and TRD0EN = 1 before reading.

Note 2. If 1 (buffer register for TRDGRBi register) is selected for the TRDBFDi bit in the TRDMR register, set the same value to the IOB2 bit in the TRDIORAi register and the IOD2 bit in the TRDIORCi register.

Note 3. If 1 (buffer register for TRDGRAi register) is selected for the TRDBFCi bit in the TRDMR register, set the same value to the IOA2 bit in the TRDIORAi register and the IOC2 bit in the TRDIORCi register.

Figure 8 - 24 Format of Timer RD I/O control register Ci (TRDIORCi) (i = 0 or 1) [Output Compare Function]

Address: F0272H (TRDIORC0), F0282H (TRDIORC1) After Reset: 88H[Note 1] R/W

Symbol	7	6	5	4	3	2	1	0
TRDIORCi	IOD3	IOD2	IOD1	IOD0	IOC3	IOC2	IOC1	IOC0

IOD3	TRDGRD register function select
0	TRDIOB output register (see **8.5.2 (2) Changing Output Pins in Registers TRDGRCi (i = 0 or 1) and TRDGRDi**)
1	General register or buffer register

IOD2	TRDGRD mode select[Note 2]
Set to 0 (output compare) in the output compare function.	

IOD1	IOD0	TRDGRD control
0	0	Pin output by compare match is disabled
0	1	Low output by compare match with TRDGRDi
1	0	High output by compare match with TRDGRDi
1	1	Toggle output by compare match with TRDGRDi

IOC3	TRDGRC register function select
0	TRDIOA output register (see **8.5.2 (2) Changing Output Pins in Registers TRDGRCi (i = 0 or 1) and TRDGRDi**)
1	General register or buffer register

IOC2	TRDGRC mode select[Note 3]
Set to 0 (output compare) in the output compare function.	

IOC1	IOC0	TRDGRC control
0	0	Pin output by compare match is disabled
0	1	Low output by compare match with TRDGRCi
1	0	High output by compare match with TRDGRCi
1	1	Toggle output by compare match with TRDGRCi

Note 1. The value after reset is undefined when FRQSEL4 = 1 in the user option byte (000C2H/010C2H) and TRD0EN = 0 in the PER1 register. If it is necessary to read the initial value, set f_{CLK} to f_{IH} and TRD0EN = 1 before reading.

Note 2. If 1 (buffer register for TRDGRBi register) is selected for the TRDBFDi bit in the TRDMR register, set the same value to the IOB2 bit in the TRDIORAi register and the IOD2 bit in the TRDIORCi register.

Note 3. If 1 (buffer register for TRDGRAi register) is selected for the TRDBFCi bit in the TRDMR register, set the same value to the IOA2 bit in the TRDIORAi register and the IOC2 bit in the TRDIORCi register.

8.3.14 Timer RD status register 0 (TRDSR0)

Figure 8 - 25 Format of Timer RD status register 0 (TRDSR0) [Input Capture Function]

Address: F0273H After Reset: 00H[Note 1] R/W

Symbol	7	6	5	4	3	2	1	0
TRDSR0	0	0	0	OVF	IMFD	IMFC	IMFB	IMFA

OVF	Overflow flag[Note 2]
[Source for setting to 0] Write 0 after reading.[Note 3] [Source for setting to 1] When the TRD0 register overflows	

IMFD	Input capture/compare match flag D[Note 6]
[Source for setting to 0] Write 0 after reading.[Note 3] [Source for setting to 1] Input edge of TRDIOD0 pin[Note 4]	

IMFC	Input capture/compare match flag C[Note 6]
[Source for setting to 0] Write 0 after reading.[Note 3] [Source for setting to 1] Input edge of TRDIOC0 pin[Note 4]	

IMFB	Input capture/compare match flag B[Note 6]
[Source for setting to 0] Write 0 after reading.[Note 3] [Source for setting to 1] Input edge of TRDIOB0 pin[Note 5]	

IMFA	Input capture/compare match flag A[Note 6]
[Source for setting to 0] Write 0 after reading.[Note 3] [Source for setting to 1] Input edge of TRDIOA0 pin[Note 5]	

Note 1. The value after reset is undefined when FRQSEL4 = 1 in the user option byte (000C2H/010C2H) and TRD0EN = 0 in the PER1 register. If it is necessary to read the initial value, set f_{CLK} to f_{IH} and TRD0EN = 1 before reading.

Note 2. When the counter value of timer RD0 changes from FFFFH to 0000H, the overflow flag is set to 1. Also, if the counter value of timer RD0 changes from FFFFH to 0000H due to an input capture/compare match during operation according to the settings of bits CCLR0 to CCLR2 in the TRDCR0 register, the overflow flag is set to 1.

Note 3. The writing results are as follows:

- Writing 1 has no effect.
- If the read value is 0, the bit remains unchanged even if 0 is written to it.
  (Even if the bit is changed from 0 to 1 after reading and then 0 is written to it, it remains 1.)
- If the read value is 1, writing 0 to the bit sets it to 0.
  When status flags of interrupt sources (applicable status flags) of timer RD are set to 0 and their interrupts are disabled in timer RD interrupt enable register i (TRDIERi), use either one of the following methods (a) to (c).

(a) Set 00H (all interrupts disabled) to timer RD interrupt enable register i (TRDIERi) and write 0 to applicable status flags.

(b) When there are bits set to 1 (interrupt-enabled) in timer RD interrupt enable register i (TRDIERi) and status flags of interrupt sources related to their bits are 0, write 0 to applicable status flags.
Example: To clear the IMFB bit to 0 when bits IMIEA and OVIE are set to 1 (interrupt-enabled) and the IMIEB bit is set to 0 (interrupt-disabled).

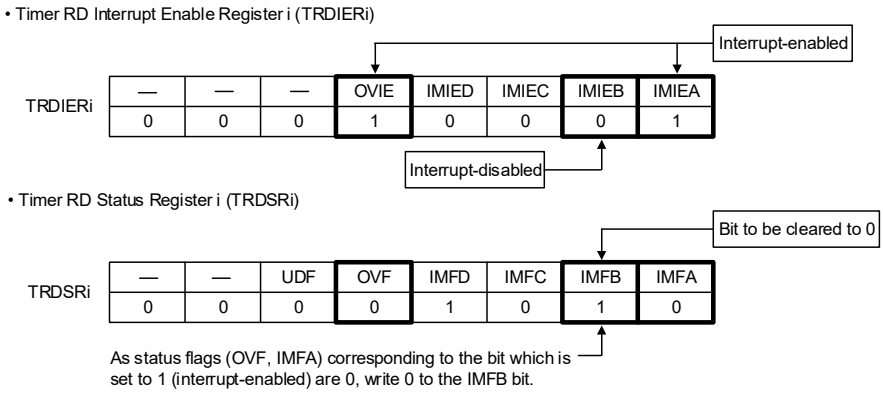

(c) When there are bits set to 1 (interrupt-enabled) in timer RD interrupt enable register i (TRDIERi) and status flags of interrupt sources related to their bits are 1, write 0 to these status flags and applicable status flags at the same time.
Example: To clear the IMFB bit to 0 when the IMIEA bit is set to 1 (interrupt-enabled) and the IMIEB bit is set to 0 (interrupt-disabled).

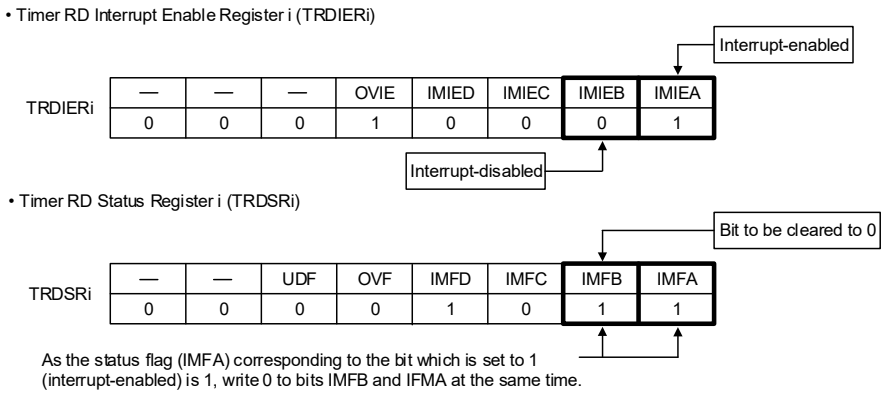

Note 4. Edge selected by bits IOk1 and IOk0 (k = C or D) in the TRDIORC0 register.
Including when the TRDBFk0 bit in the TRDMR register is 1 (TRDGRk0 is buffer register).

Note 5. Edge selected by bits IOj1 and IOj0 (j = A or B) in the TRDIORA0 register.

Note 6. When the DTC is used, bits IMFA, IMFB, IMFC, and IMFD are set to 1 after DTC transfer is completed.

Figure 8 - 26 Format of Format of Timer RD status register 0 (TRDSR0)
[Functions Other Than Input Capture Function]

Address: F0273H After Reset: 00H[Note 1] R/W

Symbol	7	6	5	4	3	2	1	0
TRDSR0	0	0	0	OVF	IMFD	IMFC	IMFB	IMFA

OVF	Overflow flag[Note 3]
[Source for setting to 0] Write 0 after reading.[Note 2] [Source for setting to 1] When the TRD0 register overflows	

IMFD	Input capture/compare match flag D[Note 5]
[Source for setting to 0] Write 0 after reading.[Note 2] [Source for setting to 1] When the values of TRD0 and TRDGRD0 match. [Note 4]	

IMFC	Input capture/compare match flag C[Note 5]
[Source for setting to 0] Write 0 after reading.[Note 2] [Source for setting to 1] When the values of TRD0 and TRDGRC0 match. [Note 4]	

IMFB	Input capture/compare match flag B[Note 5]
[Source for setting to 0] Write 0 after reading.[Note 2] [Source for setting to 1] When the values of TRD0 and TRDGRB0 match.	

IMFA	Input capture/compare match flag A[Note 5]
[Source for setting to 0] Write 0 after reading.[Note 2] [Source for setting to 1] When the values of TRD0 and TRDGRA0 match.	

Note 1. The value after reset is undefined when FRQSEL4 = 1 in the user option byte (000C2H/010C2H) and TRD0EN = 0 in the PER1 register. If it is necessary to read the initial value, set f_{CLK} to f_{IH} and TRD0EN = 1 before reading.

Note 2. The writing results are as follows:

- Writing 1 has no effect.
- If the read value is 0, the bit remains unchanged even if 0 is written to it.
  (Even if the bit is changed from 0 to 1 after reading and then 0 is written to it, it remains 1.)
- If the read value is 1, writing 0 to the bit sets it to 0.
  When status flags of interrupt sources (applicable status flags) of timer RD are set to 0 and their interrupts are disabled in timer RD interrupt enable register i (TRDIERi), use either one of the following methods (a) to (c).

(a) Set 00H (all interrupts disabled) to timer RD interrupt enable register i (TRDIERi) and write 0 to applicable status flags.

(b) When there are bits set to 1 (interrupt-enabled) in timer RD interrupt enable register i (TRDIERi) and status flags of interrupt sources related to their bits are 0, write 0 to applicable status flags.
Example: To clear the IMFB bit to 0 when bits IMIEA and OVIE are set to 1 (interrupt-enabled) and the IMIEB bit is set to 0 (interrupt-disabled).

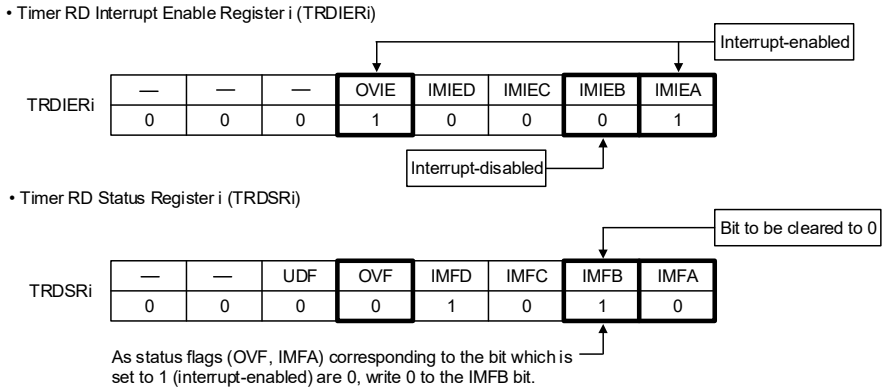

(c) When there are bits set to 1 (interrupt-enabled) in timer RD interrupt enable register i (TRDIERi) and status flags of interrupt sources related to their bits are 1, write 0 to these status flags and applicable status flags at the same time.
Example: To clear the IMFB bit to 0 when the IMIEA bit is set to 1 (interrupt-enabled) and the IMIEB bit is set to 0 (interrupt-disabled).

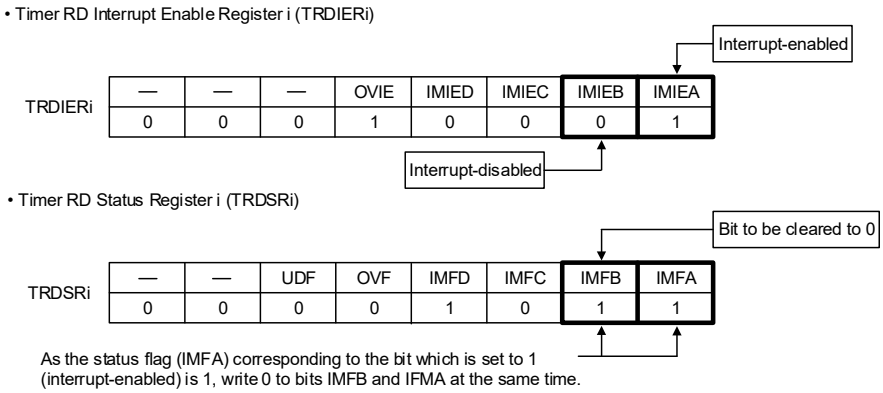

Note 3. When the counter value of timer RD0 changes from FFFFH to 0000H, the overflow flag is set to 1. Also, if the counter value of timer RD0 changes from FFFFH to 0000H due to an input capture/compare match during operation according to the settings of bits CCLR0 to CCLR2 in the TRDCR0 register, the overflow flag is set to 1.

Note 4. Including when the TRDBFk0 bit (k = C or D) in the TRDMR register is set to 1 (TRDGRK0 is buffer register).

Note 5. When the DTC is used, bits IMFA, IMFB, IMFC, and IMFD are set to 1 after DTC transfer is completed.

8.3.15 Timer RD status register 1 (TRDSR1)

Figure 8 - 27 Format of Timer RD status register 1 (TRDSR1) [Input Capture Function]

Address: F0283H After Reset: 00H[Note 1] R/W

Symbol	7	6	5	4	3	2	1	0
TRDSR1	0	0	UDF	OVF	IMFD	IMFC	IMFB	IMFA

UDF	Underflow flag
Disabled in the input capture function.	

OVF	Overflow flag [Note 2]
[Source for setting to 0] Write 0 after reading.[Note 3] [Source for setting to 1] When the TRD1 register overflows	

IMFD	Input capture/compare match flag D [Note 6]
[Source for setting to 0] Write 0 after reading.[Note 3] [Source for setting to 1] Input edge of TRDIOD1 pin[Note 4]	

IMFC	Input capture/compare match flag C [Note 6]
[Source for setting to 0] Write 0 after reading.[Note 3] [Source for setting to 1] Input edge of TRDIOC1 pin[Note 4]	

IMFB	Input capture/compare match flag B [Note 6]
[Source for setting to 0] Write 0 after reading.[Note 3] [Source for setting to 1] Input edge of TRDIOB1 pin[Note 5]	

IMFA	Input capture/compare match flag A [Note 6]
[Source for setting to 0] Write 0 after reading.[Note 3] [Source for setting to 1] Input edge of TRDIOA1 pin[Note 5]	

Note 1. The value after reset is undefined when FRQSEL4 = 1 in the user option byte (000C2H/010C2H) and TRD0EN = 0 in the PER1 register. If it is necessary to read the initial value, set f_{CLK} to f_{IH} and TRD0EN = 1 before reading.

Note 2. When the counter value of timer RD1 changes from FFFFH to 0000H, the overflow flag is set to 1. Also, if the counter value of timer RD1 changes from FFFFH to 0000H due to an input capture/compare match during operation according to the settings of bits CCLR0 to CCLR2 in the TRDCR1 register, the overflow flag is set to 1.

Note 3. The writing results are as follows:

- Writing 1 has no effect.
- If the read value is 0, the bit remains unchanged even if 0 is written to it.
  (Even if the bit is changed from 0 to 1 after reading and then 0 is written to it, it remains 1.)
- If the read value is 1, writing 0 to the bit sets it to 0.
  When status flags of interrupt sources (applicable status flags) of timer RD are set to 0 and their interrupts are disabled in timer RD interrupt enable register i (TRDIERi), use either one of the following methods (a) to (c).

(a) Set 00H (all interrupts disabled) to timer RD interrupt enable register i (TRDIERi) and write 0 to applicable status flags.

(b) When there are bits set to 1 (interrupt-enabled) in timer RD interrupt enable register i (TRDIERi) and status flags of interrupt sources related to their bits are 0, write 0 to applicable status flags.
Example: To clear the IMFB bit to 0 when bits IMIEA and OVIE are set to 1 (interrupt-enabled) and the IMIEB bit is set to 0 (interrupt-disabled).

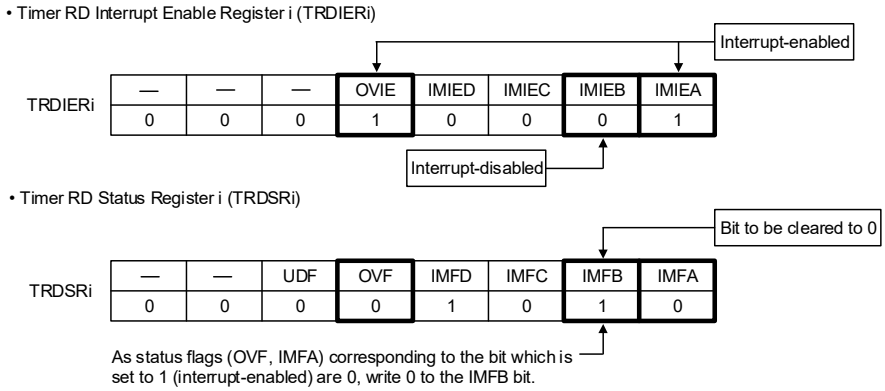

(c) When there are bits set to 1 (interrupt-enabled) in timer RD interrupt enable register i (TRDIERi) and status flags of interrupt sources related to their bits are 1, write 0 to these status flags and applicable status flags at the same time.
Example: To clear the IMFB bit to 0 when the IMIEA bit is set to 1 (interrupt-enabled) and the IMIEB bit is set to 0 (interrupt-disabled).

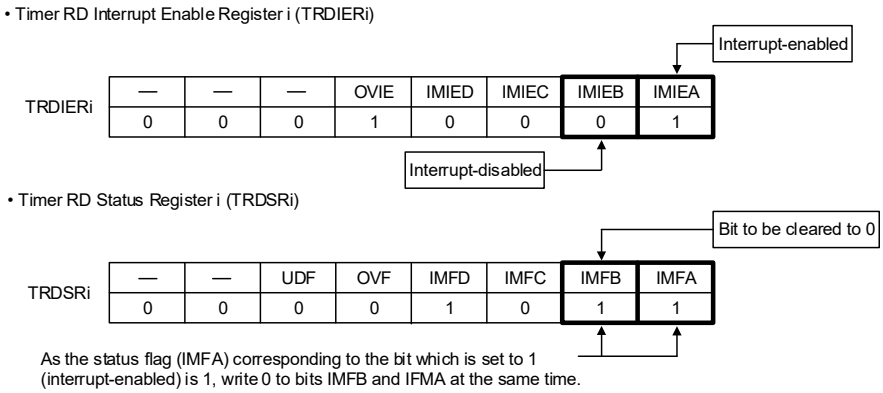

Note 4. Edge selected by bits IOk1 and IOk0 (k = C or D) in the TRDIORC1 register.
Including when the TRDBFk1 bit in the TRDMR register is 1 (TRDGRk1 is buffer register).

Note 5. Edge selected by bits IOj1 and IOj0 (j = A or B) in the TRDIORA1 register.

Note 6. When the DTC is used, bits IMFA, IMFB, IMFC, and IMFD are set to 1 after DTC transfer is completed.

Figure 8 - 28 Format of Timer RD status register 1 (TRDSR1) [Functions Other Than Input Capture Function]

Address: F0283H After Reset: 00H[Note 1] R/W

Symbol	7	6	5	4	3	2	1	0
TRDSR1	0	0	UDF	OVF	IMFD	IMFC	IMFB	IMFA

UDF	Underflow flag	R/W
In complementary PWM mode [Source for setting to 0] Write 0 after reading.[Note 2] [Sources for setting to 1] When TRD1 underflows. Enabled only in complementary PWM mode.		R/W

OVF	Overflow flag [Note 3]	R/W
[Source for setting to 0] Write 0 after reading.[Note 2] [Source for setting to 1] When the TRD1 register overflows Disabled in complementary PWM mode.		R/W

IMFD	Input capture/compare match flag D [Note 5]	R/W
[Source for setting to 0] Write 0 after reading.[Note 2] [Source for setting to 1] When the values of TRD1 and TRDGRD1 match. [Note 4]		R/W

IMFC	Input capture/compare match flag C [Note 5]	R/W
[Source for setting to 0] Write 0 after reading.[Note 2] [Source for setting to 1] When the values of TRD1 and TRDGRC1 match. [Note 4]		R/W

IMFB	Input capture/compare match flag B [Note 5]	R/W
[Source for setting to 0] Write 0 after reading.[Note 2] [Source for setting to 1] When the values of TRD1 and TRDGRB1 match.		R/W

IMFA	Input capture/compare match flag A [Note 5]	R/W
[Source for setting to 0] Write 0 after reading.[Note 2] [Source for setting to 1] When the values of TRD1 and TRDGRA1 match.		R/W

Note 1. The value after reset is undefined when FRQSEL4 = 1 in the user option byte (000C2H/010C2H) and TRD0EN = 0 in the PER1 register. If it is necessary to read the initial value, set f_{CLK} to f_{IH} and TRD0EN = 1 before reading.

Note 2. The writing results are as follows:

- Writing 1 has no effect.
- If the read value is 0, the bit remains unchanged even if 0 is written to it.
  (Even if the bit is changed from 0 to 1 after reading and then 0 is written to it, it remains 1.)
- If the read value is 1, writing 0 to the bit sets it to 0.
  When status flags of interrupt sources (applicable status flags) of timer RD are set to 0 and their interrupts are disabled in timer RD interrupt enable register i (TRDIERi), use either one of the following methods (a) to (c).

(a) Set 00H (all interrupts disabled) to timer RD interrupt enable register i (TRDIERi) and write 0 to applicable status flags.

(b) When there are bits set to 1 (interrupt-enabled) in timer RD interrupt enable register i (TRDIERi) and status flags of interrupt sources related to their bits are 0, write 0 to applicable status flags.
Example: To clear the IMFB bit to 0 when bits IMIEA and OVIE are set to 1 (interrupt-enabled) and the IMIEB bit is set to 0 (interrupt-disabled).

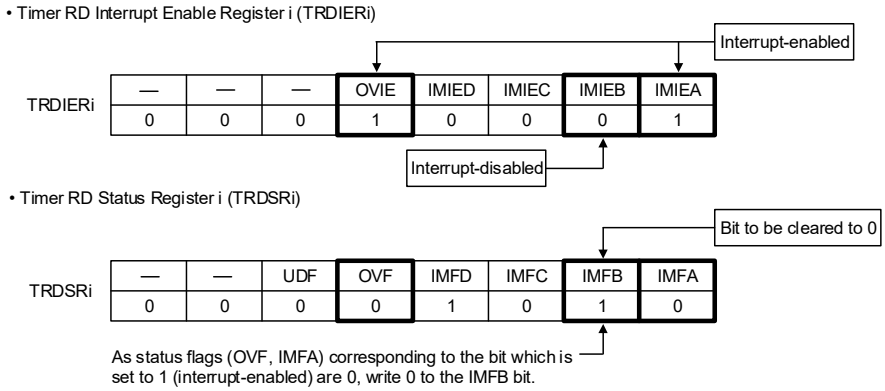

(c) When there are bits set to 1 (interrupt-enabled) in timer RD interrupt enable register i (TRDIERi) and status flags of interrupt sources related to their bits are 1, write 0 to these status flags and applicable status flags at the same time.
Example: To clear the IMFB bit to 0 when the IMIEA bit is set to 1 (interrupt-enabled) and the IMIEB bit is set to 0 (interrupt-disabled).

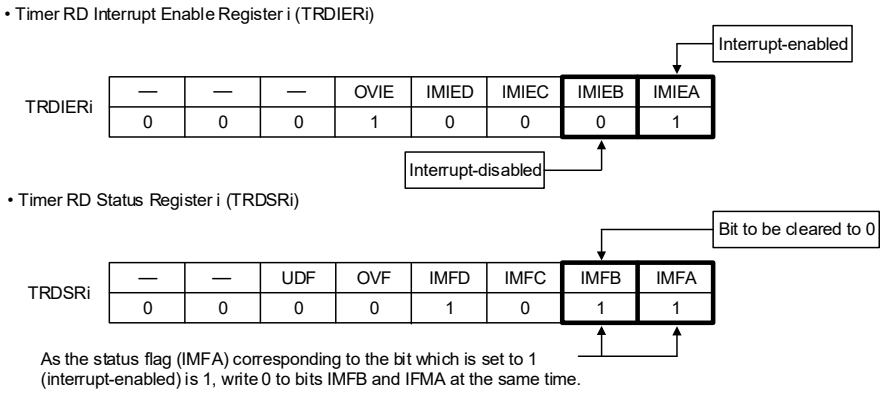

Note 3. When the counter value of timer RD1 changes from FFFFH to 0000H, the overflow flag is set to 1. Also, if the counter value of timer RD1 changes from FFFFH to 0000H due to an input capture/compare match during operation according to the settings of bits CCLR0 to CCLR2 in the TRDCR1 register, the overflow flag is set to 1.

Note 4. Including when the TRDBFk1 bit (k = C or D) in the TRDMR register is set to 1 (TRDGRK1 is buffer register).

Note 5. When the DTC is used, bits IMFA, IMFB, IMFC, and IMFD are set to 1 after DTC transfer is completed.

8.3.16 Timer RD interrupt enable register i (TRDIERi) (i = 0 or 1)

Figure 8 - 29 Format of Timer RD interrupt enable register i (TRDIERi) (i = 0 or 1)

Address: F0274H (TRDIER0), F0284H (TRDIER1) After Reset: 00H[Note] R/W

Symbol	7	6	5	4	3	2	1	0
TRDIERi	0	0	0	OVIE	IMIED	IMIEC	IMIEB	IMIEA

OVIE	Overflow/underflow interrupt enable
0	Interrupt (OVI) by bits OVF and UDF disabled
1	Interrupt (OVI) by bits OVF and UDF enabled

IMIED	Input capture/compare match interrupt enable D
0	Interrupt by the IMFD bit is disabled
1	Interrupt by the IMFD bit is enabled

IMIEC	Input capture/compare match interrupt enable C
0	Interrupt by the IMFC bit is disabled
1	Interrupt by the IMFC bit is enabled

IMIEB	Input capture/compare match interrupt enable B
0	Interrupt by the IMFB bit is disabled
1	Interrupt by the IMFB bit is enabled

IMIEA	Input capture/compare match interrupt enable A
0	Interrupt by the IMFA bit is disabled
1	Interrupt by the IMFA bit is enabled

Note The value after reset is undefined when FRQSEL4 = 1 in the user option byte (000C2H/010C2H) and TRD0EN = 0 in the PER1 register. If it is necessary to read the initial value, set f_{CLK} to f_{IH} and TRD0EN = 1 before reading.

8.3.17 Timer RD PWM function output level control register i (TRDPOCRi) (i = 0 or 1)

Settings to the TRDPOCRi register are enabled only in PWM function. When not in PWM function, they are disabled.

Figure 8 - 30 Format of Timer RD PWM function output level control register i (TRDPOCRi) (i= 0 or 1) [PWM Function]

Address: F0275H (TRDPOCR0), F0285H (TRDPOCR1) After Reset: 00H[Note] R/W

Symbol	7	6	5	4	3	2	1	0
TRDPOCRi	0	0	0	0	0	POLD	POLC	POLB

POLD	PWM function output level control D
0	TRDIODi output level is low active
1	TRDIODi output level is high active

POLC	PWM function output level control C
0	TRDIOCi output level is low active
1	TRDIOCi output level is high active

POLB	PWM function output level control B
0	TRDIOBi output level is low active
1	TRDIOBi output level is high active

Note The value after reset is undefined when FRQSEL4 = 1 in the user option byte (000C2H/010C2H) and TRD0EN = 0 in the PER1 register. If it is necessary to read the initial value, set f_{CLK} to f_{IH} and TRD0EN = 1 before reading.

8.3.18 Timer RD counter i (TRDi) (i = 0 or 1)

[Timer Mode]

Access the TRDi register in 16-bit units. Do not access it in 8-bit units.

[Reset Synchronous PWM Mode and PWM3 Mode]

Access the TRD0 register in 16-bit units. Do not access it in 8-bit units. The TRD1 register is not used in reset synchronous PWM mode and PWM3 mode.

[Complementary PWM Mode (TRD0)]

Access the TRD0 register in 16-bit units. Do not access it in 8-bit units.

[Complementary PWM Mode (TRD1)]

Access the TRD1 register in 16-bit units. Do not access it in 8-bit units.

Figure 8 - 31 Format of Timer RD counter i (TRDi) (i = 0 or 1) [Timer Mode]

Address: F0276H (TRD0), F0286H (TRD1) After Reset: 0000H[Note] R/W

Symbol	15	14	13	12	11	10	9	8	7	6	5	4	3	2	1	0
TRDi																

—	Function	Setting Range
Bits 15 to 0	Count the count source. Count operation is incremented. When an overflow occurs, the OVF bit in the TRDSRi register is set to 1.	0000H to FFFFH

Note The value after reset is undefined when FRQSEL4 = 1 in the user option byte (000C2H/010C2H) and TRD0EN = 0 in the PER1 register. If it is necessary to read the initial value, set f_{CLK} to f_{IH} and TRD0EN = 1 before reading.

Figure 8 - 32 Format of Timer RD counter 0 (TRD0) [Reset Synchronous PWM Mode and PWM3 Mode]

Address: F0276H (TRD0) After Reset: 0000H[Note] R/W

Symbol	15	14	13	12	11	10	9	8	7	6	5	4	3	2	1	0
TRD0																

—	Function	Setting Range
Bits 15 to 0	Count the count source. Count operation is incremented. When an overflow occurs, the OVF bit in the TRDSR0 register is set to 1.	0000H to FFFFH

Note The value after reset is undefined when FRQSEL4 = 1 in the user option byte (000C2H/010C2H) and TRD0EN = 0 in the PER1 register. If it is necessary to read the initial value, set f_{CLK} to f_{IH} and TRD0EN = 1 before reading.

Figure 8 - 33 Format of Timer RD counter 0 (TRD0) [Complementary PWM Mode (TRD0)]

Address: F0276H (TRD0) After Reset: 0000H[Note] R/W

Symbol	15	14	13	12	11	10	9	8	7	6	5	4	3	2	1	0
TRD0																

—	Function	Setting Range
Bits 15 to 0	Dead time must be set. Count the count source. Count operation is incremented or decremented.	0001H to FFFFH

Note The value after reset is undefined when FRQSEL4 = 1 in the user option byte (000C2H/010C2H) and TRD0EN = 0 in the PER1 register. If it is necessary to read the initial value, set f_{CLK} to f_{IH} and TRD0EN = 1 before reading.

Figure 8 - 34 Format of Timer RD counter 1 (TRD1) [Complementary PWM Mode (TRD1)]

Address: F0286H (TRD1) After Reset: 0000H[Note] R/W

Symbol	15	14	13	12	11	10	9	8	7	6	5	4	3	2	1	0
TRD1																

—	Function	Setting Range
Bits 15 to 0	Set to 0000H. Count the count source. Count operation is incremented or decremented. When an underflow occurs, the UDF bit in the TRDSR1 register is set to 1.	0000H to FFFFH

Note The value after reset is undefined when FRQSEL4 = 1 in the user option byte (000C2H/010C2H) and TRD0EN = 0 in the PER1 register. If it is necessary to read the initial value, set f_{CLK} to f_{IH} and TRD0EN = 1 before reading.

8.3.19 Timer RD general registers Ai, Bi, Ci, and Di (TRDGRAi, TRDGRBi,TRDGRCi, TRDGRDi) (i = 0 or 1) [Input Capture Function]

Access registers TRDGRAi to TRDGRDi in 16-bit units. Do not access them in 8-bit units.

The following registers are disabled in the input capture function:
TRDOER1, TRDOER2, TRDOCR, TRDPOCR0, and TRDPOCR1

Set the pulse width of the input capture signal applied to the TRDIOji pin to three or more cycles of the timer RD operating clock (f_{CLK}) when no digital filter is used (the DFj bit in the TRDDFi register is 0).

[Output Compare Function]
Access registers TRDGRAi to TRDGRDi in 16-bit units. Do not access them in 8-bit units.

The following registers are disabled in the output compare function:
TRDDF0, TRDDF1, TRDPOCR0, and TRDPOCR1

[PWM Function]
Access registers TRDGRAi to TRDGRDi in 16-bit units. Do not access them in 8-bit units.

The following registers are disabled in PWM function:
TRDDF0, TRDDF1, TRDIORA0, TRDIORC0, TRDIORA1, and TRDIORC1

[Reset Synchronous PWM Mode]
Access registers TRDGRAi to TRDGRDi in 16-bit units. Do not access them in 8-bit units.

The following registers are disabled in reset synchronous PWM mode:
TRDPMR, TRDOCR [Note], TRDDF0, TRDDF1, TRDIORA0, TRDIORC0, TRDPOCR0, TRDIORA1, TRDIORC1, and TRDPOCR1

Note The TOC0 bit in the TRDOCR register is enabled as an initial output setting of TRDIOC0 in reset synchronous PWM mode and complementary PWM mode.

[Complementary PWM Mode]
Access registers TRDGRAi to TRDGRDi in 16-bit units. Do not access them in 8-bit units.
The TRDGRC0 register is not used in complementary PWM mode.

The following registers are disabled in complementary PWM mode.
TRDPMR, TRDOCR Note, TRDDF0 TRDDF1, TRDIORA0, TRDIORC0, TRDPOCR0, TRDIORA1, TRDIORC1, and TRDPOCR1

Note The TOC0 bit in the TRDOCR register is enabled as an initial output setting of TRDIOC0 in reset synchronous PWM mode and complementary PWM mode.

Since values cannot be written to the TRDGRB0, TRDGRA1, or TRDGRB1 register directly after count operation starts (prohibited item), use the TRDGRD0, TRDGRC1, or TRDGRD1 register as a buffer register.
However, to write data to the TRDGRD0, TRDGRC1, or TRDGRD1 register, set bits TRDBFD0, TRDBFC1, and TRDBFD1 to 0 (general register). After this, bits TRDBFD0, TRDBFC1, and TRDBFD1 may be set to 1 (buffer register).

[PWM3 Mode]
Access registers TRDGRAi to TRDGRDi in 16-bit units. Do not access them in 8-bit units.

The following registers are disabled in PWM3 mode:
TRDPMR, TRDDF0, TRDDF1, TRDIORA0, TRDIORC0, TRDPOCR0, TRDIORA1, TRDIORC1, and TRDPOCR1

Registers TRDGRC0, TRDGRC1, TRDGRD0, and TRDGRD1 are not used in PWM3 mode. To use them as buffer registers, set bits TRDBFC0, TRDBFC1, TRDBFD0, and TRDBFD1 to 0 (general register) and write a value to the TRDGRC0, TRDGRC1, TRDGRD0, or TRDGRD1 register. After this, bits TRDBFC0, TRDBFC1, TRDBFD0, and TRDBFD1 may be set to 1 (buffer register).

Figure 8 - 35 Format of Timer RD general registers Ai, Bi, Ci, and Di (TRDGRAi, TRDGRBi, TRDGRCi, TRDGRDi) (i = 0 or 1) [Input Capture Function]

Address: F0278H (TRDGRA0), F027AH (TRDGRB0), FFF58H (TRDGRC0), FFF5AH (TRDGRD0), F0288H (TRDGRA1), F028AH (TRDGRB1), FFF5CH (TRDGRC1), FFF5EH (TRDGRD1) After Reset: FFFFH[Note] R/W

Symbol	15	14	13	12	11	10	9	8	7	6	5	4	3	2	1	0
TRDGRAi TRDGRBi TRDGRCi TRDGRDi																

—	Function
Bits 15 to 0	See **Table 8 - 3 TRDGRji Register Functions in Input Capture Function**.

Note The value after reset is undefined when FRQSEL4 = 1 in the user option byte (000C2H/010C2H) and TRD0EN = 0 in the PER1 register. If it is necessary to read the initial value, set f_{CLK} to f_{IH} and TRD0EN = 1 before reading.

Table 8 - 3 TRDGRji Register Functions in Input Capture Function

Register	Setting	Register Function	Input-Capture Input Pin
TRDGRAi	—	General register. The value of the TRDi register can be read at input capture.	TRDIOAi
TRDGRBi			TRDIOBi
TRDGRCi	TRDBFCi = 0	General register. The value of the TRDi register can be read at input capture.	TRDIOCi
TRDGRDi	TRDBFDi = 0		TRDIODi
TRDGRCi	TRDBFCi = 1	Buffer register. The value of the TRDi register can be read at input capture (see **8.4.2 Buffer Operation**).	TRDIOAi
TRDGRDi	TRDBFDi = 1		TRDIOBi

Remark i = 0 or 1, j = A, B, C, or D
TRDBFCi, TRDBFDi: Bits in TRDMR register

Figure 8 - 36 Format of Timer RD general registers Ai, Bi, Ci, and Di (TRDGRAi, TRDGRBi, TRDGRCi, TRDGRDi) (i = 0 or 1) [Output Compare Function]

Address: F0278H (TRDGRA0), F027AH (TRDGRB0), FFF58H (TRDGRC0), FFF5AH (TRDGRD0), F0288H (TRDGRA1), F028AH (TRDGRB1), FFF5CH (TRDGRC1), FFF5EH (TRDGRD1)

After Reset: FFFFH[Note] R/W

Symbol	15	14	13	12	11	10	9	8	7	6	5	4	3	2	1	0
TRDGRAi TRDGRBi TRDGRCi TRDGRDi																

—	Function
Bits 15 to 0	See **Table 8 - 4 TRDGRji Register Functions in Output Compare Function**.

Note The value after reset is undefined when FRQSEL4 = 1 in the user option byte (000C2H/010C2H) and TRD0EN = 0 in the PER1 register. If it is necessary to read the initial value, set f_{CLK} to f_{IH} and TRD0EN = 1 before reading.

Table 8 - 4 TRDGRji Register Functions in Output Compare Function

Register	Setting		Register Function		Output-Compare Output Pin
	TRDBFji	IOj3			
TRDGRAi	—	—	General register. Write the compare value.		TRDIOAi
TRDGRBi					TRDIOBi
TRDGRCi	0	1	General register. Write the compare value.		TRDIOCi
TRDGRDi					TRDIODi
TRDGRCi	1	1	Buffer register. Write the next compare value (see **8.4.2 Buffer Operation**).		TRDIOAi
TRDGRDi					TRDIOBi
TRDGRCi	0	0	TRDIOAi output control	(See **8.5.2 (2) Changing Output Pins in Registers TRDGRCi (i = 0 or 1) and TRDGRDi**.)	TRDIOAi
TRDGRDi			TRDIOBi output control		TRDIOBi

Caution **When the setting of bits TCK2 to TCK0 in the TRDCRi register is 000B (f_{CLK}, f_{HOCO}) and the compare value is set to 0000H, a request signal to the DTC and the ELC is generated only once immediately after the count starts. When the compare value is 0001H or higher, a request signal is generated each time a compare match occurs.**

Remark i = 0 or 1, j = A, B, C, or D
TRDBFji: Bit in TRDMR register, IOj3: Bit in TRDIORCi register

Figure 8 - 37 Format of Timer RD general registers Ai, Bi, Ci, and Di (TRDGRAi, TRDGRBi, TRDGRCi, TRDGRDi) (i = 0 or 1) [PWM Mode]

Address: F0278H (TRDGRA0), F027AH (TRDGRB0), FFF58H (TRDGRC0), FFF5AH (TRDGRD0), F0288H (TRDGRA1), F028AH (TRDGRB1), FFF5CH (TRDGRC1), FFF5EH (TRDGRD1)

After Reset: FFFFH[Note] R/W

Symbol	15	14	13	12	11	10	9	8	7	6	5	4	3	2	1	0
TRDGRAi TRDGRBi TRDGRCi TRDGRDi																

—	Function
Bits 15 to 0	See **Table 8 - 5 TRDGRji Register Functions in PWM Function**.

Note The value after reset is undefined when FRQSEL4 = 1 in the user option byte (000C2H/010C2H) and TRD0EN = 0 in the PER1 register. If it is necessary to read the initial value, set f_{CLK} to f_{IH} and TRD0EN = 1 before reading.

Table 8 - 5 TRDGRji Register Functions in PWM Function

Register	Setting	Register Function	PWM Output Pin
TRDGRAi	—	General register. Set the PWM period.	—
TRDGRBi	—	General register. Set the changing point of PWM output.	TRDIOBi
TRDGRCi	TRDBFCi = 0	General register. Set the changing point of PWM output.	TRDIOCi
TRDGRDi	TRDBFDi = 0		TRDIODi
TRDGRCi	TRDBFCi = 1	Buffer register. Set the next PWM period (see **8.4.2 Buffer Operation**).	—
TRDGRDi	TRDBFDi = 1	Buffer register. Set the changing point of the next PWM output (see **8.4.2 Buffer Operation**).	TRDIOBi

Caution **When the setting of bits TCK2 to TCK0 in the TRDCRi register is 000B (f_{CLK}, f_{HOCO}) and the compare value is set to 0000H, a request signal to the DTC and the ELC is generated only once immediately after the count starts. When the compare value is 0001H or higher, a request signal is generated each time a compare match occurs.**

Remark i = 0 or 1, j = A, B, C, or D
TRDBFCi, TRDBFDi: Bits in TRDMR register

Figure 8 - 38 Format of Timer RD general registers Ai, Bi, Ci, and Di (TRDGRAi, TRDGRBi, TRDGRCi, TRDGRDi) (i = 0 or 1) [Reset Synchronous PWM Mode]

Address: F0278H (TRDGRA0), F027AH (TRDGRB0), FFF58H (TRDGRC0), FFF5AH (TRDGRD0), F0288H (TRDGRA1), F028AH (TRDGRB1), FFF5CH (TRDGRC1), FFF5EH (TRDGRD1)

After Reset: FFFFH[Note] R/W

Symbol	15	14	13	12	11	10	9	8	7	6	5	4	3	2	1	0
TRDGRAi TRDGRBi TRDGRCi TRDGRDi																

—	Function
Bits 15 to 0	See **Table 8 - 6 TRDGRji Register Functions in Reset Synchronous PWM Mode**.

Note The value after reset is undefined when FRQSEL4 = 1 in the user option byte (000C2H/010C2H) and TRD0EN = 0 in the PER1 register. If it is necessary to read the initial value, set f_{CLK} to f_{IH} and TRD0EN = 1 before reading.

Table 8 - 6 TRDGRji Register Functions in Reset Synchronous PWM Mode

Register	Setting	Register Function	PWM Output Pin
TRDGRA0	—	General register. Set the PWM period.	(TRDIOC0, output inverted every PWM period)
TRDGRB0	—	General register. Set the changing point of PWM1 output.	TRDIOB0 TRDIOD0
TRDGRC0	TRDBFC0 = 0	(Not used in reset synchronous PWM mode.)	—
TRDGRD0	TRDBFD0 = 0		
TRDGRA1	—	General register. Set the changing point of PWM2 output.	TRDIOA1 TRDIOC1
TRDGRB1	—	General register. Set the changing point of PWM3 output.	TRDIOB1 TRDIOD1
TRDGRC1	TRDBFC1 = 0	(Not used in reset synchronous PWM mode.)	—
TRDGRD1	TRDBFD1 = 0		
TRDGRC0	TRDBFC0 = 1	Buffer register. Set the next PWM period (see **8.4.2 Buffer Operation**).	(TRDIOC0, output inverted every PWM period)
TRDGRD0	TRDBFD0 = 1	Buffer register. Set the changing point of the next PWM1 (see **8.4.2 Buffer Operation**).	TRDIOB0 TRDIOD0
TRDGRC1	TRDBFC1 = 1	Buffer register. Set the changing point of the next PWM2 (see **8.4.2 Buffer Operation**).	TRDIOA1 TRDIOC1
TRDGRD1	TRDBFD1 = 1	Buffer register. Set the changing point of the next PWM3 (see **8.4.2 Buffer Operation**).	TRDIOB1 TRDIOD1

Caution **When the setting of bits TCK2 to TCK0 in the TRDCR0 register is 000B (f_{CLK}, f_{HOCO}) and the compare value is set to 0000H, a request signal to the DTC and the ELC is generated only once immediately after the count starts. When the compare value is 0001H or higher, a request signal is generated each time a compare match occurs.**

Remark i = 0 or 1, j = A, B, C, or D
TRDBFC0, TRDBFD0, TRDBFC1, TRDBFD1: Bits in TRDMR register

Figure 8 - 39 Format of Timer RD general registers Ai, Bi, Ci, and Di (TRDGRAi, TRDGRBi, TRDGRCi, TRDGRDi) (i = 0 or 1) [Complementary PWM Mode]

Address: F0278H (TRDGRA0), F027AH (TRDGRB0), FFF58H (TRDGRC0), FFF5AH (TRDGRD0), F0288H (TRDGRA1), F028AH (TRDGRB1), FFF5CH (TRDGRC1), FFF5EH (TRDGRD1)

After Reset: FFFFH[Note] R/W

Symbol	15	14	13	12	11	10	9	8	7	6	5	4	3	2	1	0
TRDGRAi TRDGRBi TRDGRCi TRDGRDi																

—	Function
Bits 15 to 0	See **Table 8 - 7 TRDGRji Register Functions in Complementary PWM Mode**.

Note The value after reset is undefined when FRQSEL4 = 1 in the user option byte (000C2H/010C2H) and TRD0EN = 0 in the PER1 register. If it is necessary to read the initial value, set f_{CLK} to f_{IH} and TRD0EN = 1 before reading.

Table 8 - 7 TRDGRji Register Functions in Complementary PWM Mode

Register	Setting	Register Function	PWM Output Pin
TRDGRA0	—	General register. Set the PWM period at initialization. Setting range: ≥ Value set in TRD0 register (initial count value) ≤ FFFFh - value set in TRD0 register Do not write to this register when bits TSTART0 and TSTART1 in the TRDSTR register are set to 1 (count starts).	(TRDIOC0, output inverted every half period)
TRDGRB0	—	General register. Set the changing point of PWM1 output at initialization. Setting range: ≥ Value set in TRD0 register (initial count value) ≤ Value set in TRDGRA0 register - value set in TRD0 register Do not write to this register when bits TSTART0 and TSTART1 in the TRDSTR register are set to 1 (count starts).	TRDIOB0 TRDIOD0
TRDGRA1	—	General register. Set the changing point of PWM2 output at initialization. Setting range: ≥ Value set in TRD0 register (initial count value) ≤ Value set in TRDGRA0 register - value set in TRD0 register Do not write to this register when bits TSTART0 and TSTART1 in the TRDSTR register are set to 1 (count starts).	TRDIOA1 TRDIOC1
TRDGRB1	—	General register. Set the changing point of PWM3 output at initialization. Setting range: ≥ Value set in TRD0 register (initial count value) ≤ Value set in TRDGRA0 register - value set in TRD0 register Do not write to this register when bits TSTART0 and TSTART1 in the TRDSTR register are set to 1 (count starts).	TRDIOB1 TRDIOD1
TRDGRC0	—	(Not used in complementary PWM mode.)	—
TRDGRD0	TRDBFD0 = 1	Buffer register. Set the changing point of next PWM1 output (see **8.4.2 Buffer Operation**). Setting range: ≥ Value set in TRD0 register (initial count value) ≤ Value set in TRDGRA0 register - value set in TRD0 register Set this register to the same value as the TRDGRB0 register for initialization.	TRDIOB0 TRDIOD0
TRDGRC1	TRDBFC1 = 1	Buffer register. Set the changing point of next PWM2 output (see **8.4.2 Buffer Operation**). Setting range: ≥ Value set in TRD0 register (initial count value) ≤ Value set in TRDGRA0 register - value set in TRD0 register Set this register to the same value as the TRDGRA1 register for initialization.	TRDIOA1 TRDIOC1
TRDGRD1	TRDBFD1 = 1	Buffer register. Set the changing point of next PWM3 output (see **8.4.2 Buffer Operation**). Setting range: ≥ Value set in TRD0 register (initial count value) ≤ Value set in TRDGRA0 register - value set in TRD0 register Set this register to the same value as the TRDGRB1 register for initialization.	TRDIOB1 TRDIOD1

Caution **When the setting of bits TCK2 to TCK0 in the TRDCRi register is 000B (f_{CLK}, f_{HOCO}) and the compare value is set to 0000H, a request signal to the DTC and the ELC is generated only once immediately after the count starts. When the compare value is 0001H or higher, a request signal is generated each time a compare match occurs.**

Remark i = 0 or 1, j = A, B, C, or D
TRDBFD0, TRDBFC1, TRDBFD1: Bits in TRDMR register

Figure 8 - 40 Format of Timer RD general registers Ai, Bi, Ci, and Di (TRDGRAi, TRDGRBi, TRDGRCi, TRDGRDi) (i = 0 or 1) [PWM3 Mode]

Address: F0278H (TRDGRA0), F027AH (TRDGRB0), FFF58H (TRDGRC0), FFF5AH (TRDGRD0), F0288H (TRDGRA1), F028AH (TRDGRB1), FFF5CH (TRDGRC1), FFF5EH (TRDGRD1)

After Reset: FFFFH[Note] R/W

Symbol	15	14	13	12	11	10	9	8	7	6	5	4	3	2	1	0
TRDGRAi TRDGRBi TRDGRCi TRDGRDi																

—	Function
Bits 15 to 0	See **Table 8 - 8 TRDGRji Register Functions in PWM3 Mode**.

Note The value after reset is undefined when FRQSEL4 = 1 in the user option byte (000C2H/010C2H) and TRD0EN = 0 in the PER1 register. If it is necessary to read the initial value, set f_{CLK} to f_{IH} and TRD0EN = 1 before reading.

Table 8 - 8 TRDGRji Register Functions in PWM3 Mode

Register	Setting	Register Function	PWM Output Pin
TRDGRA0	—	General register. Set the PWM period. Setting range: ≥ Value set in TRDGRA1 register	TRDIOA0
TRDGRA1		General register. Set the changing point (active level timing) of PWM output Setting range: ≤ Value set in TRDGRA0 register	
TRDGRB0		General register. Set the changing point (the timing for returning to initial output level) of PWM output. Setting range: ≥ Value set in TRDGRB1 register and ≤ Value set in TRDGRA0 register	TRDIOB0
TRDGRB1		General register. Set the changing point (active level timing) of PWM output Setting range: ≤ Value set in TRDGRB0 register	
TRDGRC0	TRDBFC0 = 0	(Not used in PWM3 mode.)	—
TRDGRC1	TRDBFC1 = 0		
TRDGRD0	TRDBFD0 = 0		
TRDGRD1	TRDBFD1 = 0		
TRDGRC0	TRDBFC0 = 1	Buffer register. Set the next PWM period (see **8.4.2 Buffer Operation**). Setting range: ≤ Value set in TRDGRC1 register	TRDIOA0
TRDGRC1	TRDBFC1 = 1	Buffer register. Set the changing point of next PWM output (see **8.4.2 Buffer Operation**). Setting range: ≤ Value set in TRDGRC0 register	
TRDGRD0	TRDBFD0 = 1	Buffer register. Set the changing point of next PWM output (see **8.4.2 Buffer Operation**). Setting range: ≥ Value set in TRDGRD1 register and ≤ Value set in TRDGRC0 register	TRDIOB0
TRDGRD1	TRDBFD1 = 1	Buffer register. Set the changing point of next PWM output (see **8.4.2 Buffer Operation**). Setting range: ≤ Value set in TRDGRD0 register	

Caution **When the setting of bits TCK2 to TCK0 in the TRDCR0 register is 000B (f_{CLK}, f_{HOCO}) and the compare value is set to 0000H, a request signal to the DTC and the ELC is generated only once immediately after the count starts. When the compare value is 0001H or higher, a request signal is generated each time a compare match occurs.**

Remark i = 0 or 1, j = A, B, C, or D
TRDBFC0, TRDBFD0, TRDBFC1, TRDBFD1: Bits in TRDMR register

8.3.20 Port mode register 1 (PM1)

This register sets input/output of port 1 in 1-bit units.
When using the ports (P10/TRDIOD1, P11/TRDIOC1, etc.) to be shared with the timer output pin for timer output, set the port mode register (PMxx) bit and port register (Pxx) bit corresponding to each port to 0.

Example When using P10/TRDIOD1 for timer output
Set the PM10 bit of port mode register 1 to 0.
Set the P10 bit of port register 1 to 0.

When using the ports (P10/TRDIOD1, P11/TRDIOC1, etc.) to be shared with the timer input pin for timer input, set the port mode register (PMxx) bit corresponding to each port to 1. At this time, the port register (Pxx) bit may be 0 or 1.

Example When using P10/TRDIOD1 for timer input
Set the PM10 bit of port mode register 1 to 1.
Set the P10 bit of port register 1 to 0 or 1.

The PM1 register can be set by a 1-bit or 8-bit memory manipulation instruction.
Reset signal generation sets this register to FFH.

Figure 8 - 41 Format of Port mode register 1 (PM1) (64-pin products)

Address: FFF21H After Reset: FFH R/W

Symbol	7	6	5	4	3	2	1	0
PM1	PM17	PM16	PM15	PM14	PM13	PM12	PM11	PM10

PMmn	Pmn pin I/O mode selection (m = 1; n = 0 to 7)
0	Output mode (output buffer on)
1	Input mode (output buffer off)

Remark The figure shown above presents the format of port mode register 1 of the 64-pin products. The format of the port mode register of other products, see **Tables 4 - 4** to **4 - 6 PMxx, Pxx, PUxx, PIMxx, POMxx, PMCxx registers and the bits mounted on each product**.

8.4 Items Common to Multiple Modes

8.4.1 Count Sources

The count source selection method is the same in all modes. However, the external clock cannot be selected in PWM3 mode.

Table 8 - 9 Count Source Selection

Count Source	Selection
f_{CLK}, f_{HOCO} Note, $f_{CLK}/2$, $f_{CLK}/4$, $f_{CLK}/8$, $f_{CLK}/32$	The count source is selected by bits TCK2 to TCK0 in the TRDCRi register.
External signal input to TRDCLK pin	The STCLK bit in the TRDFCR register is set to 1 (external clock input enabled). Bits TCK2 to TCK0 in the TRDCRi register are set to 101B (count source: external clock). The active edge is selected by bits CKEG1 and CKEG0 in the TRDCRi register. The port mode register bit for the I/O port multiplexed with the TRDCLK pin is set to 1 (input mode).

Remark i = 0 or 1

Note f_{CLK} is selected when FRQSEL4 = 0 and f_{HOCO} is selected when FRQSEL4 = 1 in the user option byte (000C2H/010C2H). When selecting f_{HOCO} as the count source for timer RD, set f_{CLK} to f_{IH} before setting bit 4 (TRD0EN) in peripheral enable register 1 (PER1). When changing f_{CLK} to a clock other than f_{IH}, clear bit 4 (TRD0EN) in peripheral enable register 1 (PER1) before changing.

Figure 8 - 42 Count Source Block Diagram

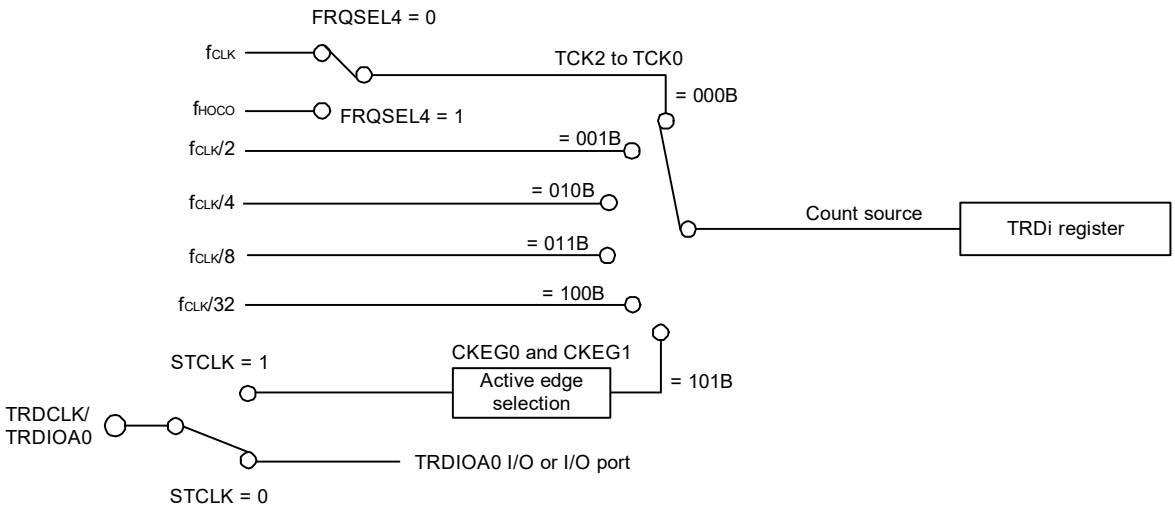

Remark
i = 0 or 1

TCK0 to TCK2, CKEG0, CKEG1: Bits in TRDCRi register
STCLK: Bit in TRDFCR register
FRQSEL4: Bit in user option byte (000C2H/010C2H)

Set the pulse width of the external clock applied to the TRDCLK pin to three or more cycles of the timer RD operating clock (f_{CLK}).

8.4.2 Buffer Operation

The TRDGRCi register (i = 0 or 1) can be used as the buffer register for the TRDGRAi register, and the TRDGRDi register can be used as the buffer register for the TRDGRBi register by means of bits TRDBFCi and TRDBFDi in the TRDMR register.

• TRDGRAi buffer register: TRDGRCi register

• TRDGRBi buffer register: TRDGRDi register

Buffer operation depends on the mode. Table 8 - 10 lists the Buffer Operation in Each Mode.

Table 8 - 10 Buffer Operation in Each Mode

Function and Mode		Transfer Timing	Transfer Register
Timer mode	Input capture function	TRDIOAi input signal (Input capture signal input)	Transfer content of TRDGRAi register to TRDGRCi register (buffer register)
		TRDIOBi input signal (Input capture signal input)	Transfer content of TRDGRBi register to TRDGRDi register (buffer register)
	Output compare function	Compare match with TRDi register and TRDGRAi register	Transfer content of TRDGRCi register (buffer register) to TRDGRAi register
		Compare match with TRDi register and TRDGRBi register	Transfer content of TRDGRDi register (buffer register) to TRDGRBi register
	PWM function	Compare match with TRDi register and TRDGRAi register	Transfer content of TRDGRCi register (buffer register) to TRDGRAi register
		Compare match with TRDi register and TRDGRBi register	Transfer content of TRDGRDi register (buffer register) to TRDGRBi register
Reset synchronous PWM mode		Compare match with TRD0 register and TRDGRA0 register	Transfer content of TRDGRCi register (buffer register) to TRDGRAi register Transfer content of TRDGRDi register (buffer register) to TRDGRBi register
Complementary PWM mode		• Underflow of TRD1 register when CMD1 and CMD0 bits in TRDFCR register are 11B • Compare match with TRD0 register and TRDGRA0 register when CMD1 and CMD0 bits in TRDFCR register are 10B	Transfer content of TRDGRC1 register (buffer register) to TRDGRA1 register Transfer content of TRDGRDi register (buffer register) to TRDGRBi register
PWM3 mode		Compare match with TRD0 register and TRDGRA0 register	Transfer content of TRDGRCi register (buffer register) to TRDGRAi register Transfer content of TRDGRDi register (buffer register) to TRDGRBi register

Remark i = 0 or 1

Figure 8 - 43 Buffer Operation in Input Capture Function

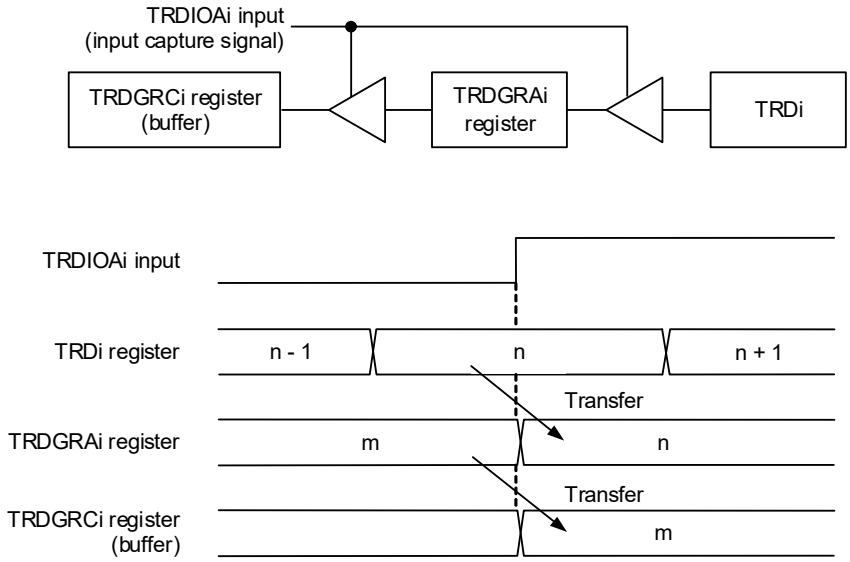

Remark
i = 0 or 1

The above diagram applies under the following conditions:
• The TRDBFCi bit in the TRDMR register is set to 1 (TRDGRCi register is buffer register for TRDGRAi register).
• Bits IOA2 to IOA0 in the TRDIORAi register are set to 100B (input capture at the rising edge).

Figure 8 - 44 Buffer Operation in Output Compare Function

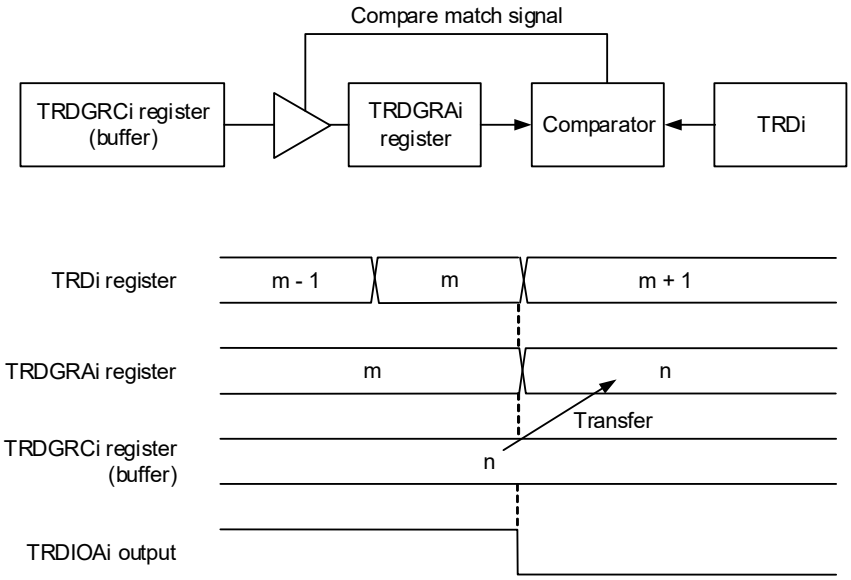

Remark
i = 0 or 1

The above diagram applies under the following conditions:
• The TRDBFCi bit in the TRDMR register is set to 1 (TRDGRCi register is buffer register for TRDGRAi register).
• Bits IOA2 to IOA0 in the TRDIORAi register are set to 001B (low output by compare match).

Perform the following for the timer mode (input capture and output compare functions).
When using the TRDGRCi (i = 0 or 1) register as the buffer register for the TRDGRAi register
• Set the IOC3 bit in the TRDIORCi register to 1 (general register or buffer register).
• Set the IOC2 bit in the TRDIORCi register to the same value as the IOA2 bit in the TRDIORAi register.

When using the TRDGRDi register as the buffer register for the TRDGRBi register
• Set the IOD3 bit in the TRDIORCi register to 1 (general register or buffer register).
• Set the IOD2 bit in the TRDIORCi register to the same value as the IOB2 bit in the TRDIORAi register.

In the input capture function, when the TRDGRCi register or TRDGRDi register is used as a buffer register, the IMFC bit or IMFD bit in the TRDSRi register is set to 1 at the input edge of the TRDIOCi pin or TRDIODi pin.

When also using registers TRDGRCi and TRDGRDi as buffer registers for the output compare function, PWM function, reset synchronous PWM mode, complementary PWM mode, and PWM3 mode, bits IMFC and IMFD in the TRDSRi register are set to 1 by a compare match with the TRDi register.

8.4.3 Synchronous Operation

The TRD1 register is synchronized with the TRD0 register

- Synchronous preset
  When the TRDSYNC bit in the TRDMR register is set to 1 (synchronous operation), the data is written to both the TRD0 and TRD1 registers after writing to the TRDi register.
- Synchronous clear
  When the TRDSYNC bit is 1 and bits CCLR2 to CCLR0 in the TRDCR0 register are 011B (synchronous clear), the TRD0 register is set to 0000H at the same time as the TRD1 register is set to 0000H.
  Also, when the TRDSYNC bit is 1 and bits CCLR2 to CCLR0 are 011B (synchronous clear), the TRD1 register is set to 0000H at the same time as the TRD0 register is set to 0000H.

Figure 8 - 45 Synchronous Operation

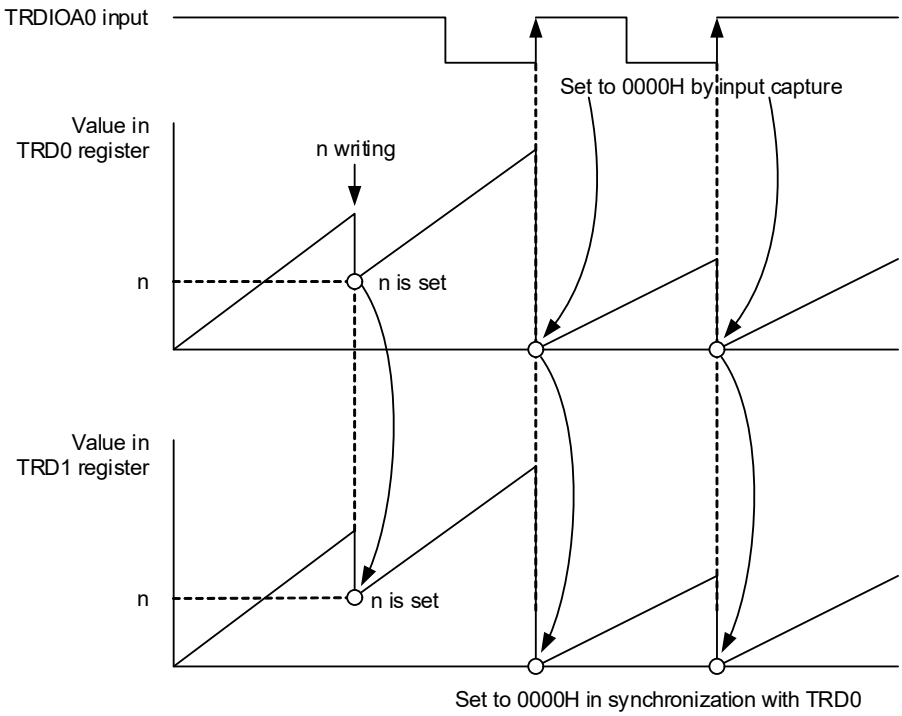

The above diagram applies under the following conditions:

- The TRDSYNC bit in the TRDMR register is set to 1 (synchronous operation).
- Bits CCLR2 to CCLR0 in the TRDCR0 register are set to 001B (TRD0 is set to 0000H by input capture).
  Bits CCLR2 to CCLR0 in the TRDCR1 register are set to 011B (TRD1 is set to 0000H in synchronization with TRD0).
- Bits IOA2 to IOA0 in the TRDIORA0 register are set to 100B.
- Bits CMD1 to CMD0 in the TRDFCR register are set to 00B.
  The PWM3 bit in the TRDFCR register is set to 1.

  } (Input capture at the rising edge of TRDIOA0 input)

8.4.4 Pulse Output Forced Cutoff

In the PWM function, reset synchronous PWM mode, complementary PWM mode, and PWM3 mode, the pulse output from the TRDIOji output pin (i = 0 or 1, j = A, B, C, or D) can be cut off by the INTP0 pin input. The pins used for output in these functions or modes can function as the output pin of timer RD when the corresponding bit in the TRDOER1 register is set to 0 (timer RD output enabled). When the TRDPTO bit in the TRDOER2 register is 1 (pulse output forced cutoff signal INTP0 pin input enabled), the output pin used as a timer RD output port outputs the output value set by the DFCK1, DFCK0, PENB1, PENB0, DFD, DFC, DFB, or DFA bit in the TRDDF0 or TRDDF1 register.

Make the following settings to use this function:

- Set the pin state when the pulse output is forcibly cut off (high impedance, low output, or high output) using TRDDFi.
- Refer to **8.4.5 Event Input from Event Link Controller (ELC)** for details on pulse forced cutoff by ELC event input.
- When pulse output is forcibly cut out, the TRDSHUTS bit in the TRDOER2 register is set to 1. To suspend the forced cutoff of the pulse output, set the TRDSHUTS bit to 0 while the count is stopped (TSTARTi = 0).
- Set the TRDPTO bit in the TRDOER2 register to 1 (pulse output forced cutoff signal INTP0 pin input enabled).

Figure 8 - 46 Pulse Output Forced Cutoff

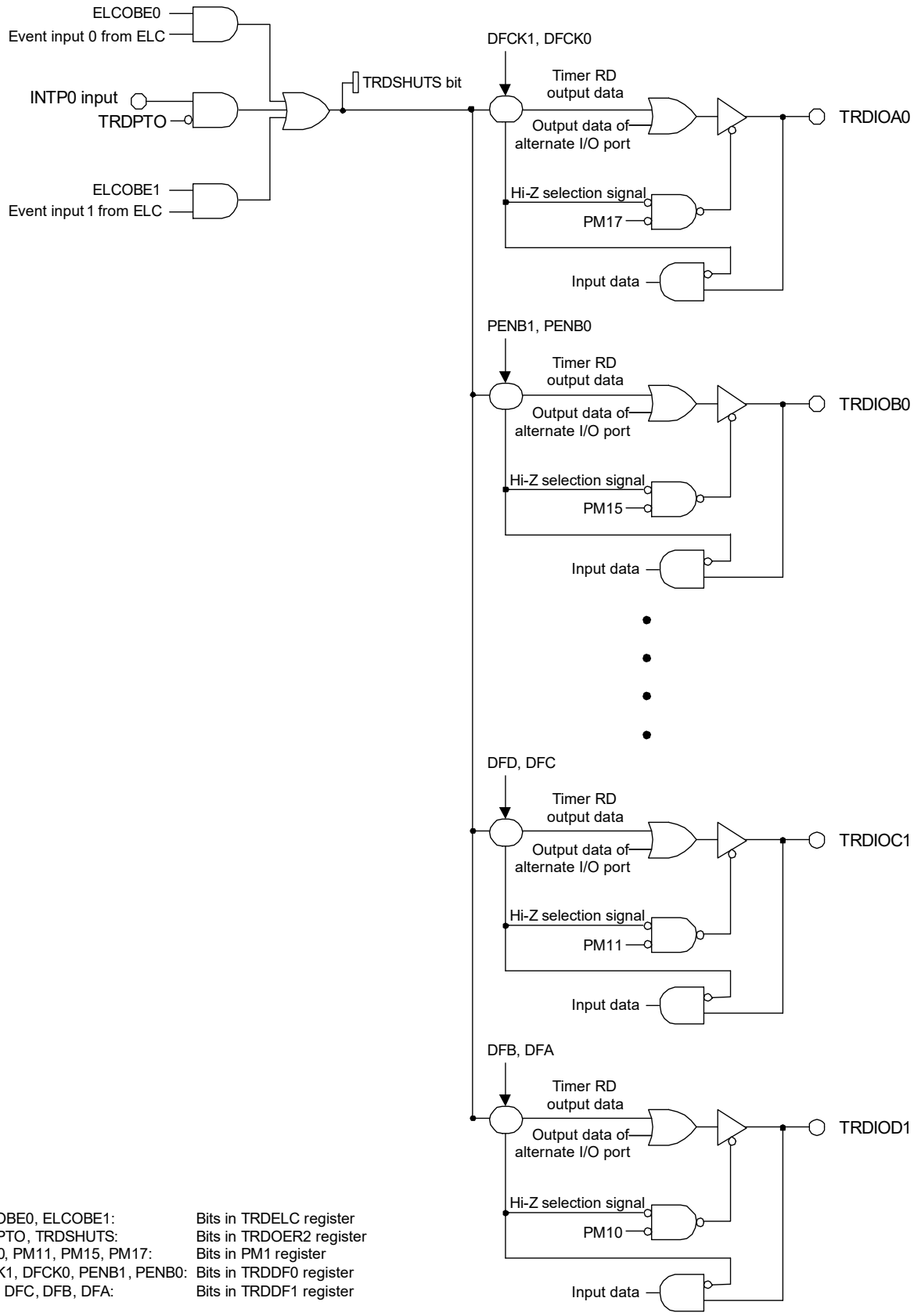

ELCOBE0, ELCOBE1:	Bits in TRDELC register
TRDPTO, TRDSHUTS:	Bits in TRDOER2 register
PM10, PM11, PM15, PM17:	Bits in PM1 register
DFCK1, DFCK0, PENB1, PENB0:	Bits in TRDDF0 register
DFD, DFC, DFB, DFA:	Bits in TRDDF1 register

8.4.5 Event Input from Event Link Controller (ELC)

Timer RD performs two operations by event input from the ELC.

(a) TRDIOD0/TRDIOD1 input capture

Timer RD captures the TRDIOD0/TRDIOD1 input when an event is input from the ELC. The IMFD bit in the TRDSRi register is set to 1 at this time. To use this function, select the input capture function in timer mode and set the ELCICE0 or ELCICE1 bit in the TRDELC register to 1. This function is disabled in any other modes (for the output compare function in timer mode, PWM function, reset synchronous PWM mode, complementary PWM mode, and PWM3 mode).

(b) Pulse output forced cutoff operation Note

The pulse output is forcibly cutoff by event input from the ELC. To use this function, select pulse output mode (PWM function, reset synchronous PWM mode, complementary PWM mode, or PWM3 mode) and set the ELCOBE0 or ELCOBE1 bit to 1. This function is disabled for the input capture function in timer mode.

Note The pulse output is cutoff during the low input period for forced cutoff from the INTP0 pin, but the pulse output is cutoff once by a single event input from the ELC for forced cutoff by the ELC event.

[Setting Procedure]

(1) Set timer RD as the ELC event link destination.

(2) Set bits ELCICEi (i = 0 or 1) and ELCOBEi (i = 0 or 1) to 1 in the TRDELC register.

8.4.6 Event Output to Event Link Controller (ELC)/Data Transfer Controller (DTC)

Table 8 - 11 lists the Timer RD Modes and Event Output to ELC/DTC.

Table 8 - 11 Timer RD Modes and Event Output to ELC/DTC

Used Mode	Output Source	ELC	DTC
Input capture function	TRDIOA0 edge detection set by bits IOA1 and IOA0 in the TRDIORA0 register	Available	Available
	TRDIOB0 edge detection set by bits IOB1 and IOB0 in the TRDIORA0 register	Available	Available
	TRDIOC0 edge detection set by bits IOC1 and IOC0 in the TRDIORC0 register	—	Available
	TRDIOD0 edge detection set by bits IOD1 and IOD0 in the TRDIORC0 register	—	Available
	TRDIOA1 edge detection set by bits IOA1 and IOA0 in the TRDIORA1 register	Available	Available
	TRDIOB1 edge detection set by bits IOB1 and IOB0 in the TRDIORA1 register	Available	Available
	TRDIOC1 edge detection set by bits IOC1 and IOC0 in the TRDIORC1 register	—	Available
	TRDIOD1 edge detection set by bits IOD1 and IOD0 in the TRDIORC1 register	—	Available
Output compare function, PWM function, reset synchronous PWM mode, complementary PWM mode, and PWM3 mode	Compare match between registers TRD0 and TRDGRA0	Available	Available
	Compare match between registers TRD0 and TRDGRB0	Available	Available
	Compare match between registers TRD0 and TRDGRC0	—	Available
	Compare match between registers TRD0 and TRDGRD0	—	Available
	Compare match between registers TRD1 and TRDGRA1	Available	Available
	Compare match between registers TRD1 and TRDGRB1	Available	Available
	Compare match between registers TRD1 and TRDGRC1	—	Available
	Compare match between registers TRD1 and TRDGRD1	—	Available
Complementary PWM mode	TRD1 register underflow	Available	—

8.5 Timer RD Operation

For timer RX and coordinated operation, and timer RD forced cutoff control (PWMOPA) and coordinated operation, refer to **CHAPTER 10 TIMER RX** and **8.8 PWM Option Unit A (PWMOPA)**.

8.5.1 Input Capture Function

The input capture function measures the external signal width and period. The content of the TRDi register (counter) is transferred to the TRDGRji register as a trigger of the TRDIOji pin (i = 0 or 1, j = A, B, C, or D) external signal (input capture). Since this function is enabled with a combination of the TRDIOji pin and TRDGRji register, the input capture function, or any other mode or function, can be selected for each individual pin.
Figure 8 - 47 shows the Block Diagram of Input Capture Function (For Timer RD0), Table 8 - 12 lists the Input Capture Function Specifications, and Figure 8 - 48 shows an Operation Example of Input Capture Function.

Figure 8 - 47 Block Diagram of Input Capture Function (For Timer RD0)

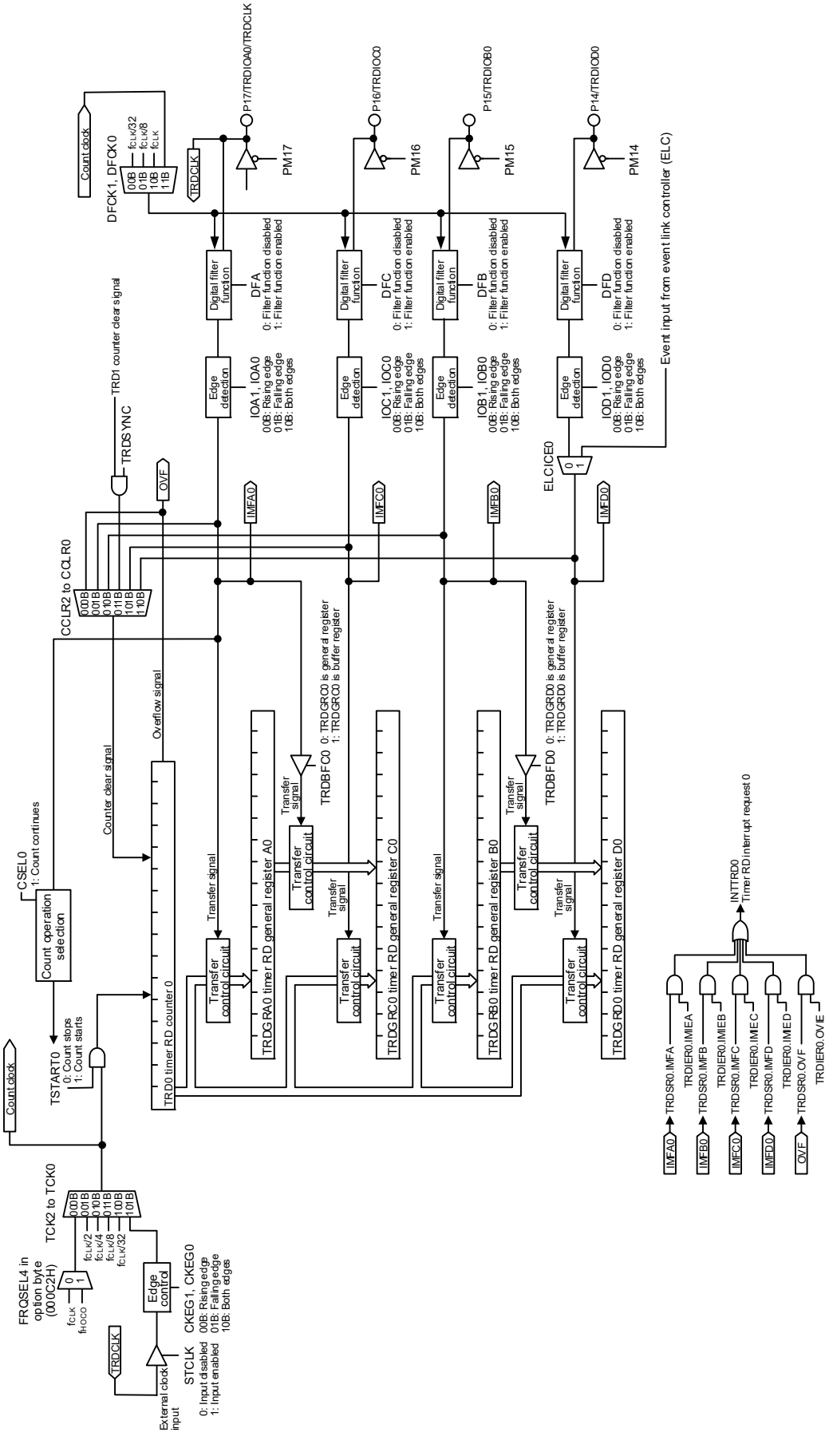

Table 8 - 12 Input Capture Function Specifications

Item	Specification
Count sources	f_{HOCO} Note, f_{CLK}, $f_{CLK}/2$, $f_{CLK}/4$, $f_{CLK}/8$, $f_{CLK}/32$ External signal input to the TRDCLK pin (active edge selected by a program)
Count operations	Increment
Count period	When bits CCLR2 to CCLR0 in the TRDCRi register are set to 000B (free-running operation). 1/fk × 65536 fk: Frequency of count source
Count start condition	1 (count starts) is written to the TSTARTi bit in the TRDSTR register.
Count stop condition	0 (count stops) is written to the TSTARTi bit in the TRDSTR register when the CSELi bit in the TRDSTR register is set to 1.
Interrupt request generation timing	• Input capture (active edge of TRDIOji input) • TRDi register overflow
TRDIOA0 pin function	I/O port, input-capture input, or TRDCLK (external clock) input
TRDIOB0, TRDIOC0, TRDIOD0, TRDIOA1 to TRDIOD1 pin function	I/O port or input-capture input (selectable for each pin)
INTP0 pin function	Not used (input-only port or INTP0 interrupt input)
Read from timer	The count value can be read by reading the TRDi register.
Write to timer	• When the TRDSYNC bit in the TRDMR register is 0 (timer RD0 and timer RD1 operate independently). Data can be written to the TRDi register. • When the TRDSYNC bit in the TRDMR register is 1 (timer RD0 and timer RD1 operate synchronously). Data can be written to both the TRD0 and TRD1 registers by writing to the TRDi register.
Selectable functions	• Input-capture input pin selection Either one pin or multiple pins of TRDIOAi, TRDIOBi, TRDIOCi, and TRDIODi. • Input-capture input active edge selection Rising edge, falling edge, or both rising and falling edges • Timing for setting the TRDi register to 0000H. At overflow or input capture • Buffer operation (see **8.4.2 Buffer Operation**) • Synchronous operation (see **8.4.3 Synchronous Operation**) • Digital filter. The TRDIOji input is sampled, and when the sampled input level match three times, that level is determined. • Input capture operation by event input from ELC.

Note f_{HOCO} is selected only when FRQSEL4 = 1 in the user option byte (000C2H/010C2H). When selecting f_{HOCO} as the count source for timer RD, set f_{CLK} to f_{IH} before setting bit 4 (TRD0EN) in peripheral enable register 1 (PER1). When changing f_{CLK} to a clock other than f_{IH}, clear bit 4 (TRD0EN) in peripheral enable register 1 (PER1) before changing.

Remark i = 0 or 1, j = A, B, C, or D

(1) Operation Example

By setting bits CCLR0 to CCLR2 in the TRDCRi register (i = 0 or 1), the timer RDi counter value is reset by an input capture/compare match. Figure 8 - 48 shows an operation example with bits CCLR2 to CCLR0 set to 001B.

If the input capture operation has been set to clear the count during operation and is performed when the timer count value is FFFFH, depending on the timing between the count source and input capture operation interrupt flags bits IMFA to IMFD and OVF in the TRDSRi register may be set to 1 simultaneously.

Figure 8 - 48 Operation Example of Input Capture Function

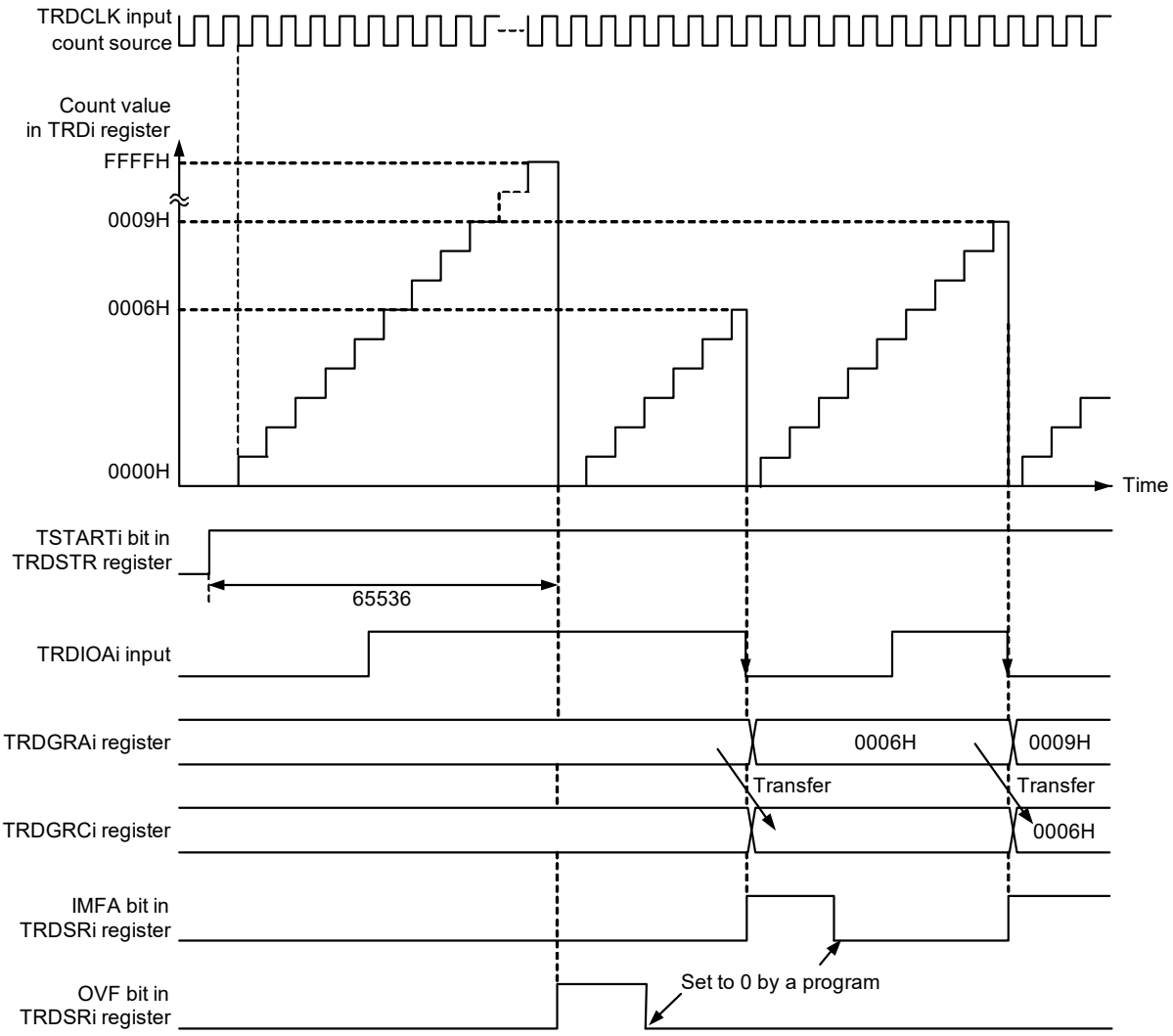

Remark
i = 0 or 1

The above diagram applies under the following conditions:
Bits CCLR2 to CCLR0 in the TRDCRi register are set to 001B (TRDi register is set to 0000H by TRDGRAi register input capture).
Bits TCK2 to TCK0 in the TRDCRi register are set to 101B (TRDCLK input for the count source).
Bits CKEG1 and CKEG0 in the TRDCRi register are set to 01B (count at the falling edge for the count source).
Bits IOA2 to IOA0 in the TRDIORAi register are set to 101B (input capture at the falling edge of TRDIOAi input).
The TRDBFCi bit in the TRDMR register is set to 1 (TRDGRCi register is buffer register for TRDGRAi register).

(2) Digital Filter

The TRDIOji input (i = 0 or 1, j = A, B, C, or D) is sampled, and when the sampled input level matches three times, its level is determined. Select the digital filter function and sampling clock using the TRDDFi register. Figure 8 - 49 shows the Block Diagram of Digital Filter.

Figure 8 - 49 Block Diagram of Digital Filter

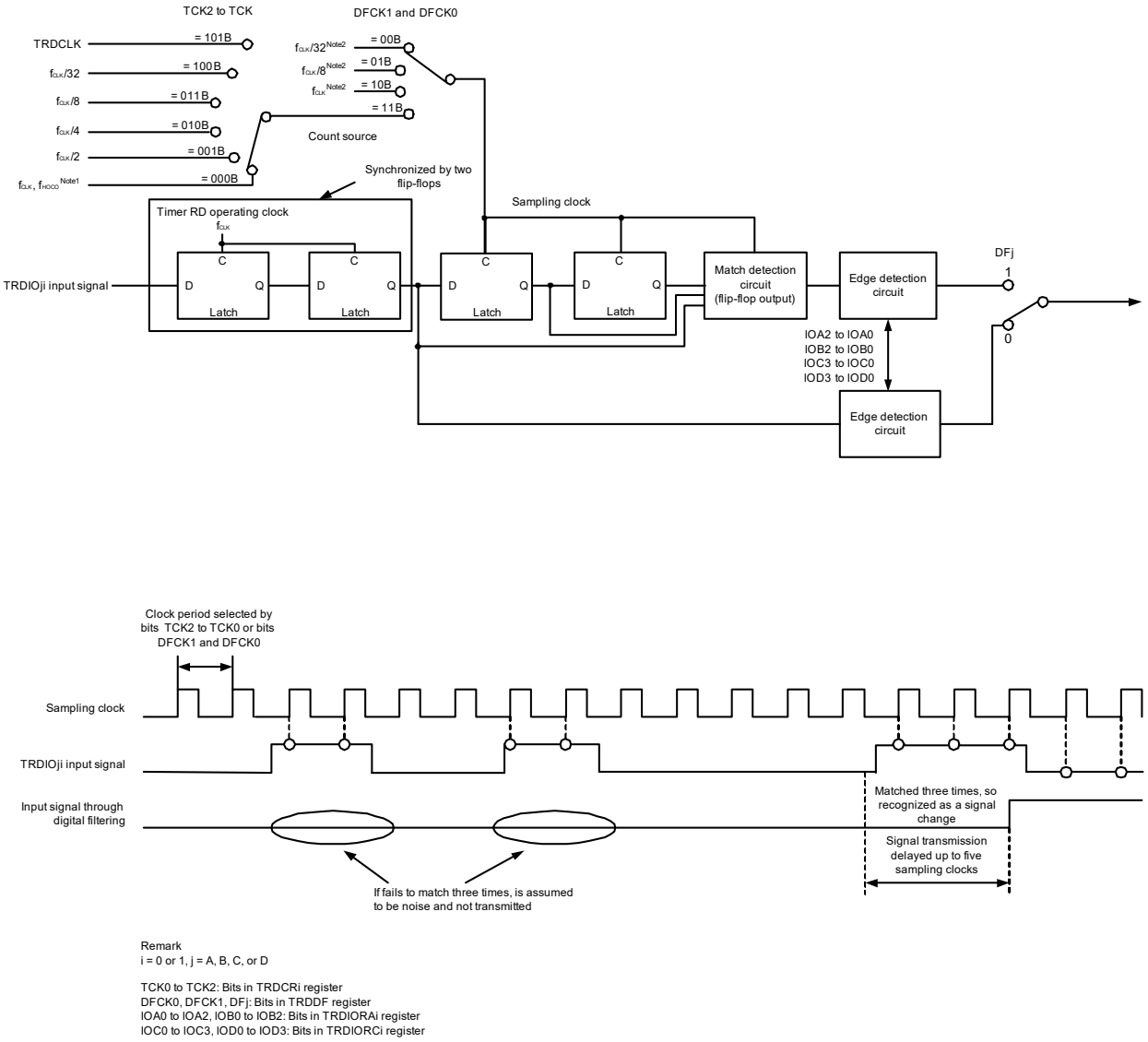

Note 1. f_{CLK} is selected when FRQSEL4 = 0 and f_{HOCO} is selected when FRQSEL4 = 1 in the user option byte (000C2H/010C2H).

Note 2. When FRQSEL4 = 1 in the user option byte (000C2H/010C2H), $f_{CLK}/32$, $f_{CLK}/8$, and f_{CLK} are set to $f_{HOCO}/32$, $f_{HOCO}/8$, and f_{HOCO}, respectively.

8.5.2 Output Compare Function

This function detects matches (compare match) between the content of the TRDGRji register (j = A, B, C, or D) and the content of the TRDi register (counter) (i = 0 or 1). When the contents match, an arbitrary level is output from the TRDIOji pin. Since this function is enabled with a combination of the TRDIOji pin and TRDGRji register, the output compare function, or any other mode or function, can be selected for each individual pin.

Figure 8 - 50 shows the Block Diagram of Output Compare Function (For Timer RD0), Table 8 - 13 lists the Output Compare Function Specifications, and Figure 8 - 51 shows an Operation Example of Output Compare Function.

Figure 8 - 50 Block Diagram of Output Compare Function (For Timer RD0)

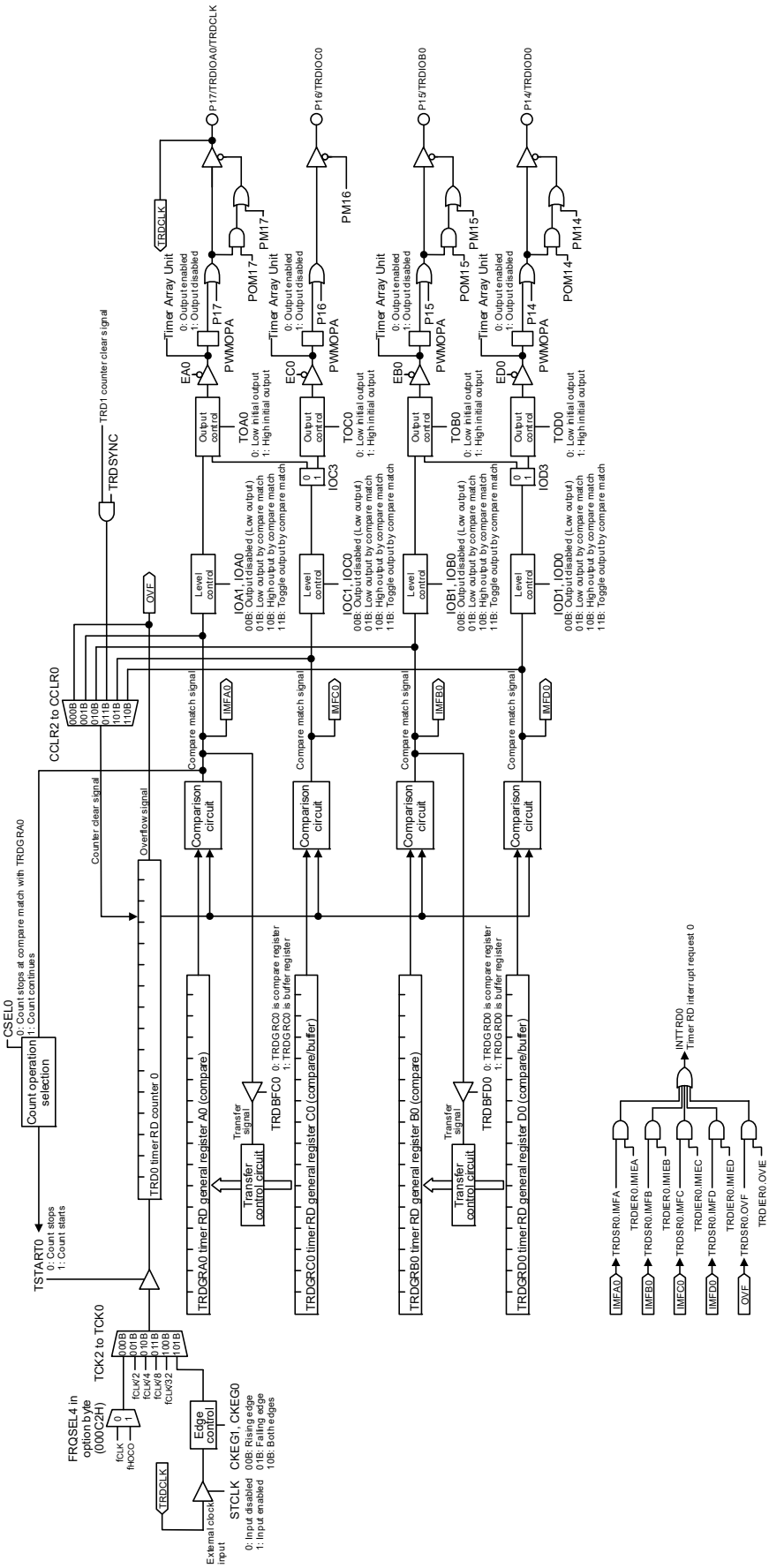

Table 8 - 13 Output Compare Function Specifications

Item	Specification
Count sources	f_{HOCO} Note, f_{CLK}, $f_{CLK}/2$, $f_{CLK}/4$, $f_{CLK}/8$, $f_{CLK}/32$ External signal input to the TRDCLK pin (active edge selected by a program)
Count operations	Increment
Count period	• When bits CCLR2 to CCLR0 in the TRDCRi register are set to 000B (free-running operation). 1/fk × 65536 fk: Frequency of count source • When bits CCLR1 and CCLR0 in the TRDCRi register are set to 01B or 10B (TRDi register is set to 0000H at compare match with TRDGRji register). 1/fk × (n + 1) n: Value set in the TRDGRji register
Waveform output timing	Compare match (contents of registers TRDi and TRDGRji match)
Count start condition	1 (count starts) is written to the TSTARTi bit in the TRDSTR register.
Count stop conditions	• 0 (count stops) is written to the TSTARTi bit in the TRDSTR register when the CSELi bit in the TRDSTR register is set to 1. The output compare output pin holds the output level before the count stops. • When the CSELi bit in the TRDSTR register is set to 0, the count stops at the compare match with the TRDGRAi register. The output compare output pin holds the level after output change by compare match.
Interrupt request generation timing	• Compare match (contents of registers TRDi and TRDGRji match) • TRDi register overflow
TRDIOA0 pin function	I/O port, output-compare output, or TRDCLK (external clock) input
TRDIOB0, TRDIOC0, TRDIOD0, TRDIOA1 to TRDIOD1 pin function	I/O port or output-compare output (selectable for each pin)
INTP0 pin function	Not used (input-only port or INTP0 interrupt input)
Read from timer	The count value can be read by reading the TRDi register.
Write to timer	• When the TRDSYNC bit in the TRDMR register is set to 0 (timer RD0 and timer RD1 operate independently). Data can be written to the TRDi register. • When the TRDSYNC bit in the TRDMR register is set to 1 (timer RD0 and timer RD1 operate synchronously). Data can be written to both the TRD0 and TRD1 registers by writing to the TRDi register.
Selectable functions	• Output-compare output pin selection Either one pin or multiple pins of TRDIOAi, TRDIOBi, TRDIOCi, and TRDIODi. • Output level selection at compare match Low output, high output, or inverted output level • Initial output level selection The level can be set for the period from the count start to the compare match. • Timing for setting the TRDi register to 0000H Overflow or compare match in the TRDGRAi register • Buffer operation (see **8.4.2 Buffer Operation**) • Synchronous operation (see **8.4.3 Synchronous Operation**) • Changing output pins for registers TRDGRCi and TRDGRDi The TRDGRCi register can be used as output control of the TRDIOAi pin and the TRDGRDi register can be used as output control of the TRDIOBi pin. • Timer RD can be used as the internal timer without output.

Note f_{HOCO} is selected only when FRQSEL4 = 1 in the user option byte (000C2H/010C2H). When selecting f_{HOCO} as the count source for timer RD, set f_{CLK} to f_{IH} before setting bit 4 (TRD0EN) in peripheral enable register 1 (PER1). When changing f_{CLK} to a clock other than f_{IH}, clear bit 4 (TRD0EN) in peripheral enable register 1 (PER1) before changing.

Remark i = 0 or 1, j = A, B, C, or D

(1) Operation Example

By setting bits CCLR0 to CCLR2 in the TRDCRi register (i = 0 or 1), the timer RDi counter value is reset by an input capture/compare match. If the expected compare value is FFFFH at this time, FFFFH changes to 0000H, same as the overflow operation, and the overflow flag is set to 1.

Figure 8 - 51 Operation Example of Output Compare Function

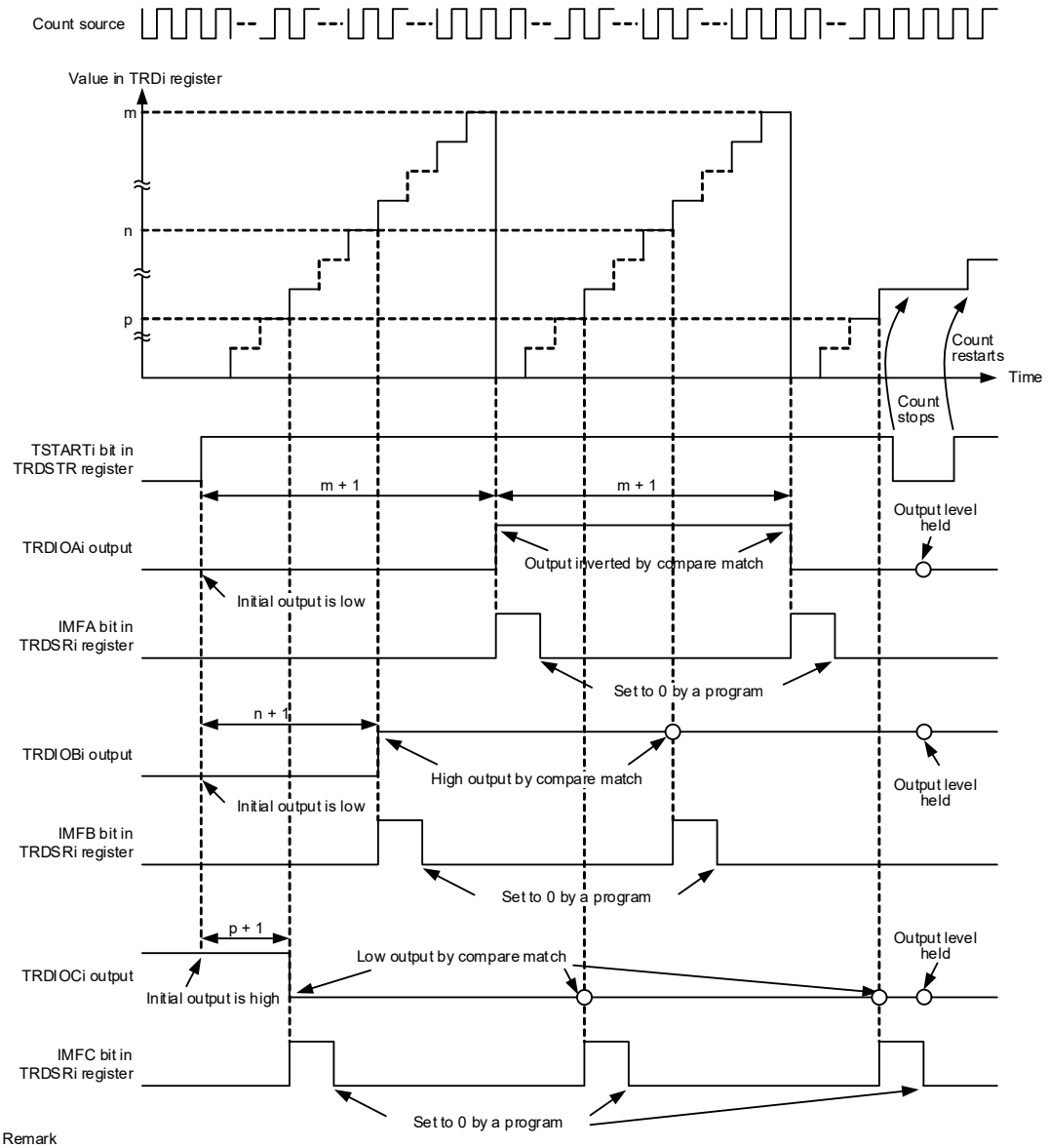

Remark
i = 0 or 1
M: Value set in TRDGRAi register
n: Value set in TRDGRBi register
p: Value set in TRDGRCi register

The above diagram applies under the following conditions:
The CSELi bit in the TRDSTR register is set to 1 (TRDi is not stopped by compare match).
Bits TRDBFCi and TRDBFDi in the TRDMR register are set to 0 (TRDGRCi and TRDGRDi do not operate as buffers).
Bits EAi, EBi, and ECi in the TRDOER1 register are set to 0 (TRDIOAi, TRDIOBi and TRDIOCi output enabled).
Bits CCLR2 to CCLR0 in the TRDCRi register are set to 001B (TRDi is set to 0000H by compare match with TRDGRAi).
Bits TOAi and TOBi in the TRDOCR register is set to 0 (initial output is low until compare match), the TOCi bit is set to 1 (initial output is high until compare match).
Bits IOA2 to IOA0 in the TRDIORAi register are set to 011B (TRDIOAi output inverted at TRDGRAi compare match).
Bits IOB2 to IOB0 in the TRDIORAi register are set to 010B (TRDIOBi high output at TRDGRBi compare match).
Bits IOC3 to IOC0 in the TRDIORCi register are set to 1001B (TRDIOCi low output at TRDGRCi register compare match).
Bits IOD3 to IOD0 in the TRDIORCi register are set to 1000B (TRDGRDi register does not control TRDIOBi pin output. Pin output by compare match is disabled).

(2) Changing Output Pins in Registers TRDGRCi (i = 0 or 1) and TRDGRDi

The TRDGRCi register can be used for output control of the TRDIOAi pin, and the TRDGRDi register can be used for output control of the TRDIOBi pin. Therefore, each pin output can be controlled as follows:

- TRDIOAi output is controlled by the values in registers TRDGRAi and TRDGRCi.
- TRDIOBi output is controlled by the values in registers TRDGRBi and TRDGRDi.

Figure 8 - 52 Changing Output Pins in Registers TRDGRCi and TRDGRDi

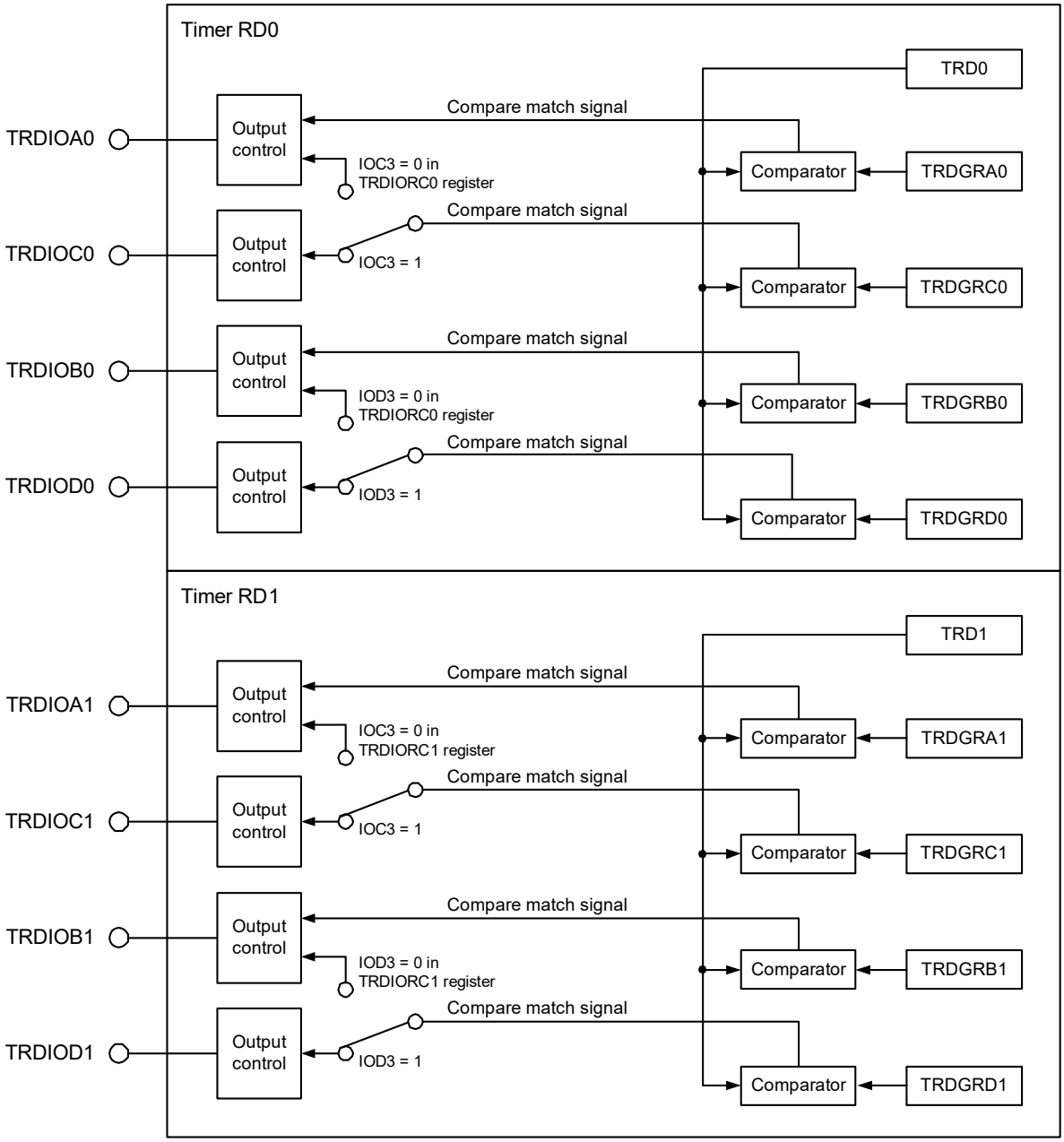

Change output pins in registers TRDGRCi and TRDGRDi as follows:

- Select 0 (TRDGRji register output pin is changed) using the IOj3 (j = C or D) bit in the TRDIORCi register.
- Set the TRDBFji bit in the TRDMR register to 0 (general register).
- Set different values in registers TRDGRCi and TRDGRAi. Also, set different values in registers TRDGRDi and TRDGRBi.

Figure 8 - 53 shows an Operation Example When TRDGRCi Register is Used for Output Control of TRDIOAi Pin and TRDGRDi Register is Used for Output Control of TRDIOBi Pin.

Figure 8 - 53 Operation Example When TRDGRCi Register is Used for Output Control of TRDIOAi Pin and TRDGRDi Register is Used for Output Control of TRDIOBi Pin

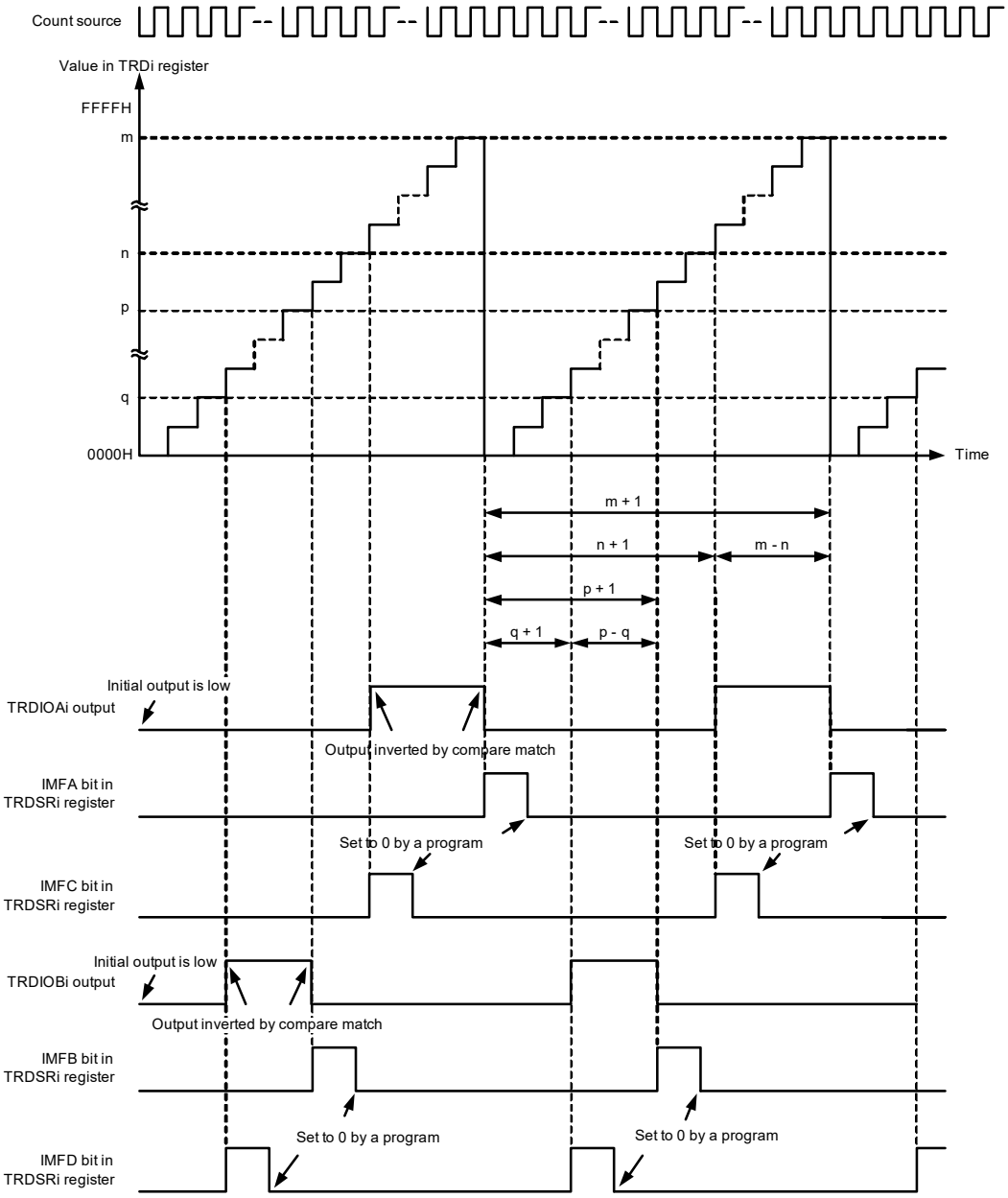

Remark
i = 0 or 1
m: Value set in TRDGRAi register
n: Value set in TRDGRCi register
p: Value set in TRDGRBi register
q: Value set in TRDGRDi register

The above diagram applies under the following conditions:
The CSELi bit in the TRDSTR register is set to 1 (TRDi register is not stopped by compare match).
Bits TRDBFCi and TRDBFDi in the TRDMR register are set to 0 (TRDGRCi and TRDGRDi do not operate as buffers).
Bits EAi and EBi in the TRDOER1 register are set to 0 (TRDIOAi and TRDIOBi output enabled).
Bits CCLR2 to CCLR0 in the TRDCRi register are set to 001 B (TRDi is set to 0000H by compare match with TRDGRAi).
Bits TOAi and TOBi in the TRDOCR register are set to 0 (initial output is low until compare match).
Bits IOA2 to IOA0 in the TRDIORAi register are set to 011 B (TRDIOAi output inverted at TRDGRAi compare match).
Bits IOB2 to IOB0 in the TRDIORAi register are set to 011 B (TRDIOBi output inverted at TRDGRBi compare match).
Bits IOC3 to IOC0 in the TRDIORCi register are set to 0011 B (TRDIOAi output inverted at TRDGRCi compare match).
Bits IOD3 to IOD0 in the TRDIORCi register are set to 0011 B (TRDIOBi output inverted at TRDGRDi compare match).

8.5.3 PWM Function

In PWM function, a PWM waveform is output. Up to three PWM waveforms with the same period can be output by timer RDi (i = 0 or 1). Also, up to six PWM waveforms with the same period can be output by synchronizing timer RD0 and timer RD1.

Since this mode functions by a combination of the TRDIOji pin (i = 0 or 1, j = B, C, or D) and TRDGRji register, PWM function, or any other mode or function, can be selected for each individual pin. (However, since the TRDGRAi register is used when using any pin for PWM function, the TRDGRAi register cannot be used for other modes.)

Figure 8 - 54 shows the Block Diagram of PWM Function (For Timer RD0), Table 8 - 14 lists the PWM Mode Specifications, and Figures 8 - 55 and 8 - 56 show Operation Examples in PWM Function.

Figure 8 - 54 Block Diagram of PWM Function (For Timer RD0)

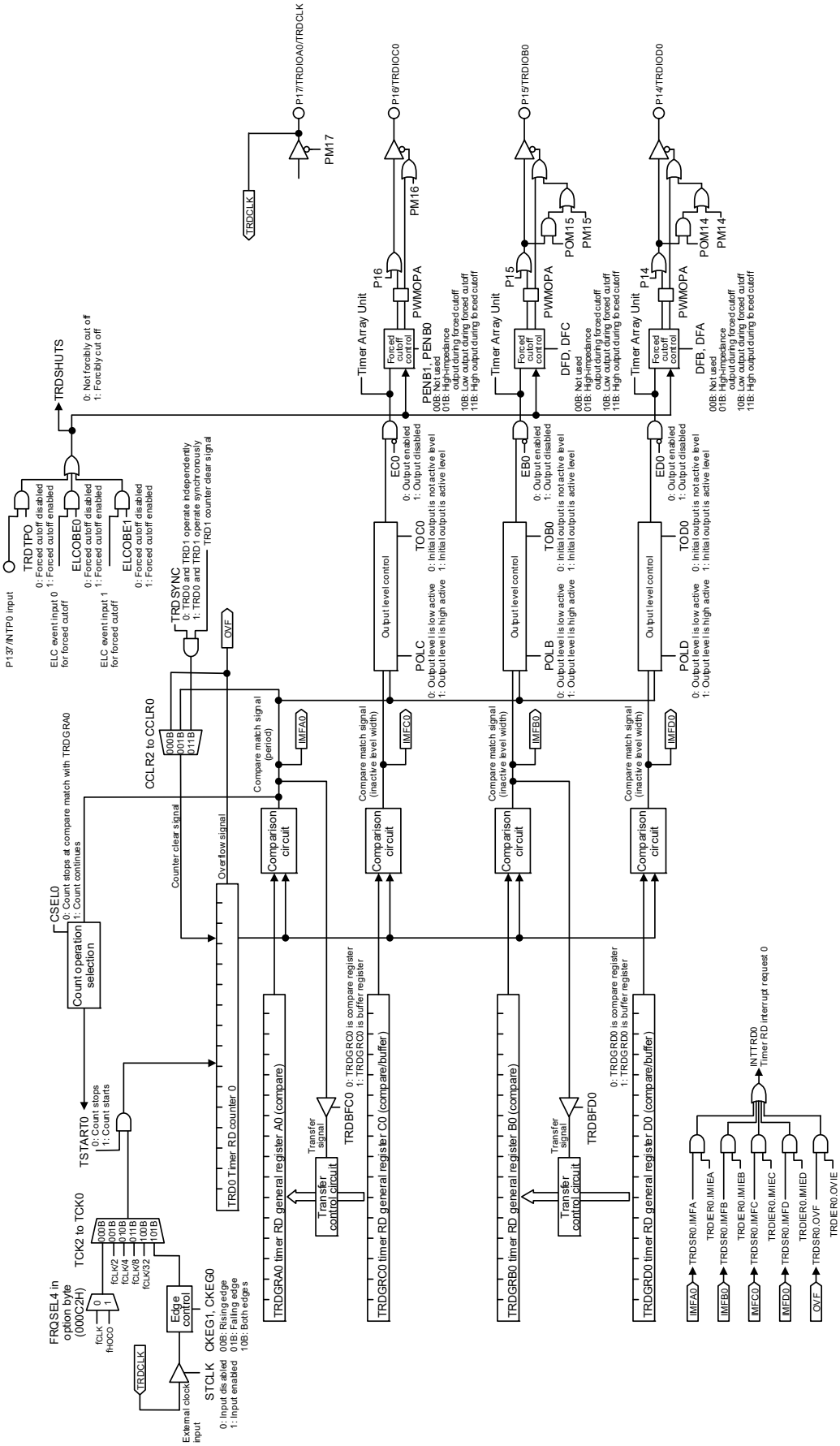

Table 8 - 14 PWM Mode Specifications

Item	Specification
Count sources	f_{HOCO} Note, f_{CLK}, $f_{CLK}/2$, $f_{CLK}/4$, $f_{CLK}/8$, $f_{CLK}/32$ External signal input to the TRDCLK pin (active edge selected by a program)
Count operations	Increment
PWM waveform	PWM period: 1/fk × (m + 1) Active level width: 1/fk × (m - n) Inactive level width: 1/fk × (n + 1) fk: Frequency of count source m: Value set in the TRDGRAi register n: Value set in the TRDGRji register 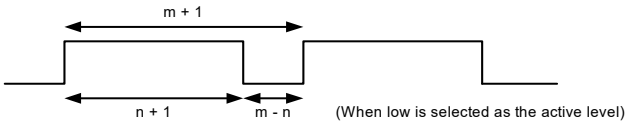
Count start condition	1 (count starts) is written to the TSTARTi bit in the TRDSTR register.
Count stop conditions	• 0 (count stops) is written to the TSTARTi bit in the TRDSTR register when the CSELi bit in the TRDSTR register is set to 1. The PWM output pin holds the output level before the count stops. • When the CSELi bit in the TRDSTR register is set to 0, the count stops at the compare match with the TRDGRAi register. The PWM output pin holds the level after output change by compare match.
Interrupt request generation timing	• Compare match (content of the TRDi register matches content of the TRDGRhi register) • TRDi register overflow
TRDIOA0 pin function	I/O port or TRDCLK (external clock) input
TRDIOA1 pin function	I/O port
TRDIOB0, TRDIOC0, TRDIOD0, TRDIOB1, TRDIOC1, TRDIOD1 pin function	I/O port or pulse output (selectable for each pin)
INTP0 pin function	Pulse output forced cutoff signal input (input-only port or INTP0 interrupt input)
Read from timer	The count value can be read by reading the TRDi register.
Write to timer	The value can be written to the TRDi register.
Selectable functions	• One to three PWM output pins selectable with timer RDi Either one pin or multiple pins of TRDIOBi, TRDIOCi, and TRDIODi. • Active level selectable for each pin. • Initial output level selectable for each pin. • Synchronous operation (see **8.4.3 Synchronous Operation**) • Buffer operation (see **8.4.2 Buffer Operation**) • Pulse output forced cutoff signal input (see **8.4.4 Pulse Output Forced Cutoff**)

Note f_{HOCO} is selected only when FRQSEL4 = 1 in the user option byte (000C2H/010C2H). When selecting f_{HOCO} as the count source for timer RD, set f_{CLK} to f_{IH} before setting bit 4 (TRD0EN) in peripheral enable register 1 (PER1). When changing f_{CLK} to a clock other than f_{IH}, clear bit 4 (TRD0EN) in peripheral enable register 1 (PER1) before changing.

Remark i = 0 or 1, j = B, C, or D, h = A, B, C, or D

(1) Operation Example

Figure 8 - 55 Operation Example in PWM Function

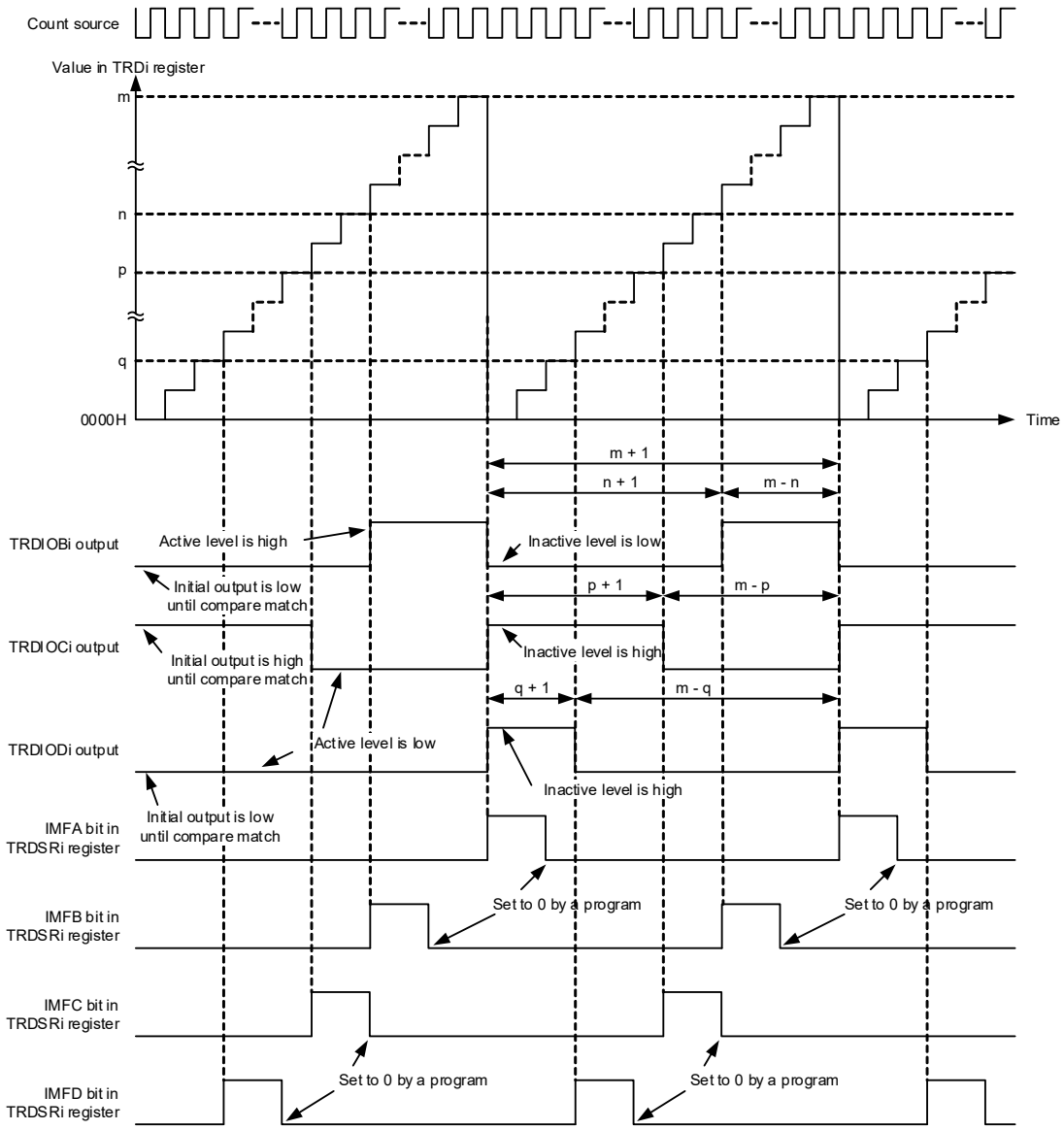

Remark
i = 0 or 1
m: Value set in TRDGRAi register
n: Value set in TRDGRBi register
p: Value set in TRDGRCi register
q: Value set in TRDGRDi register

The above diagram applies under the following conditions:
Bits TRDBFCi and TRDBFDi in the TRDMR register are set to 0 (TRDGRCi and TRDGRDi do not operate as buffers).
Bits EBi, ECi, and EDi in the TRDOER1 register are set to 0 (TRDIOBi, TRDIOCi and TRDIODi output enabled).
Bits TOBi and TOCi in the TRDOCR register are set to 0 (inactive level), the TODi bit is set to 1 (active level).
The POLB bit in the TRDPOCRi register is set to 1 (active level is high), bits POLC and POLD are set to 0 (active level is low).

Figure 8 - 56 Operation Example in PWM Function (Duty Cycle 0%, Duty Cycle 100%)

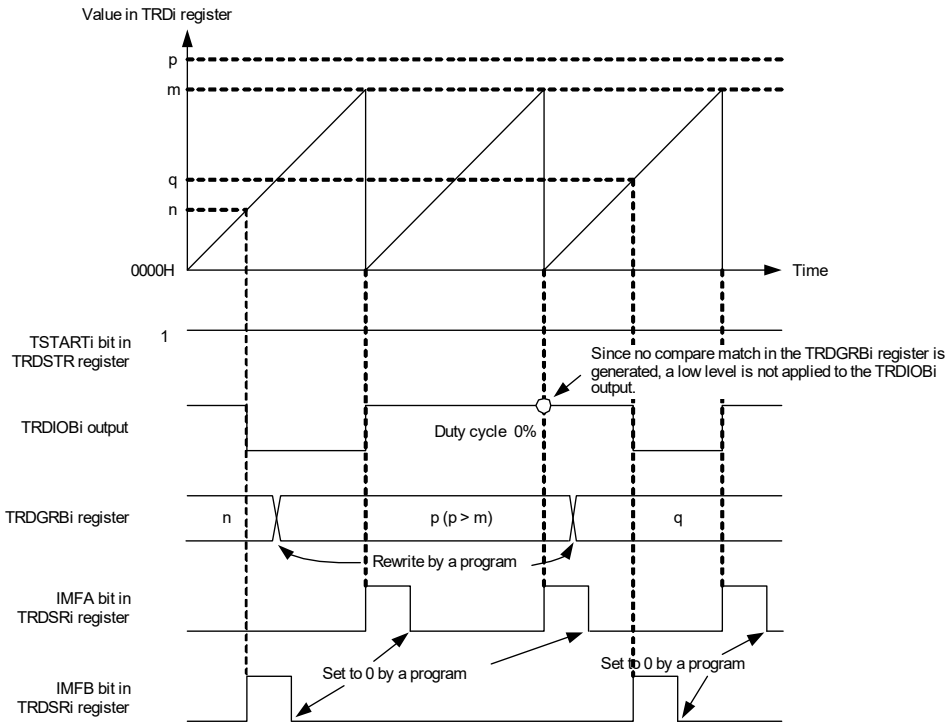

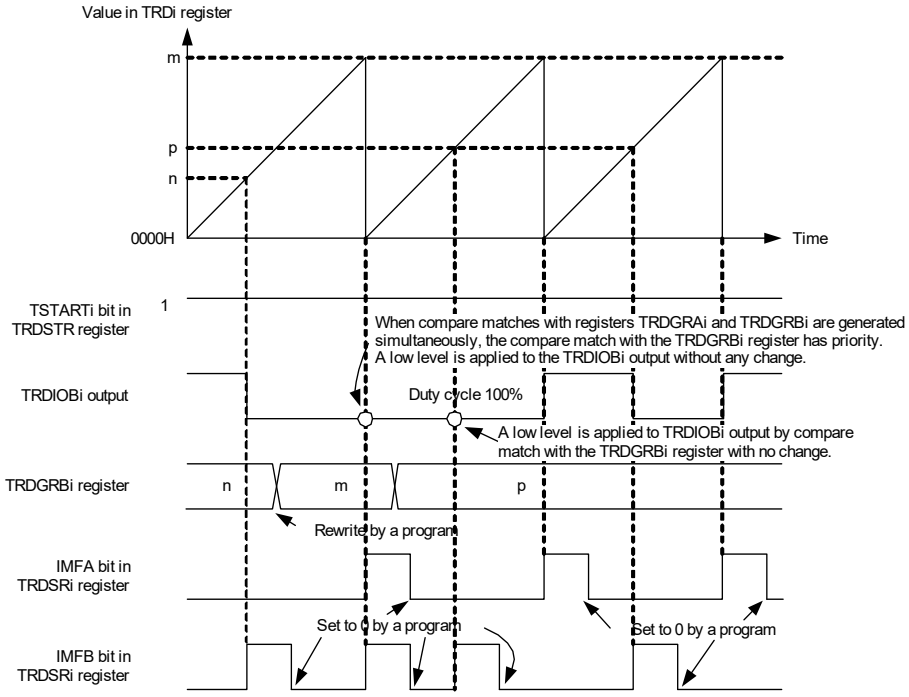

Remark
i = 0 or 1
m: Value set in TRDGRAi register

The above diagram applies under the following conditions:
The EBi bit in the TRDOER1 register is set to 0 (TRDIOBi output enabled).
The POLB bit in the TRDPOCRi register is set to 0 (active level is low).

8.5.4 Reset Synchronous PWM Mode

In this mode, three normal-phases and three counter-phases of the PWM waveform are output with the same period (three-phase, sawtooth wave modulation, and no dead time).

Figure 8 - 57 shows the Block Diagram of Reset Synchronous PWM Mode (For Timer RD0), Table 8 - 15 lists the Reset Synchronous PWM Mode Specifications, Figure 8 - 58 shows an Operation Example in Reset Synchronous PWM Mode.

See **Figure 8 - 56 Operation Example in PWM Function (Duty Cycle 0%, Duty Cycle 100%)** for an operation example in PWM Mode with duty cycle 0% and duty cycle 100%.

Figure 8 - 57 Block Diagram of Reset Synchronous PWM Mode (For Timer RD0)

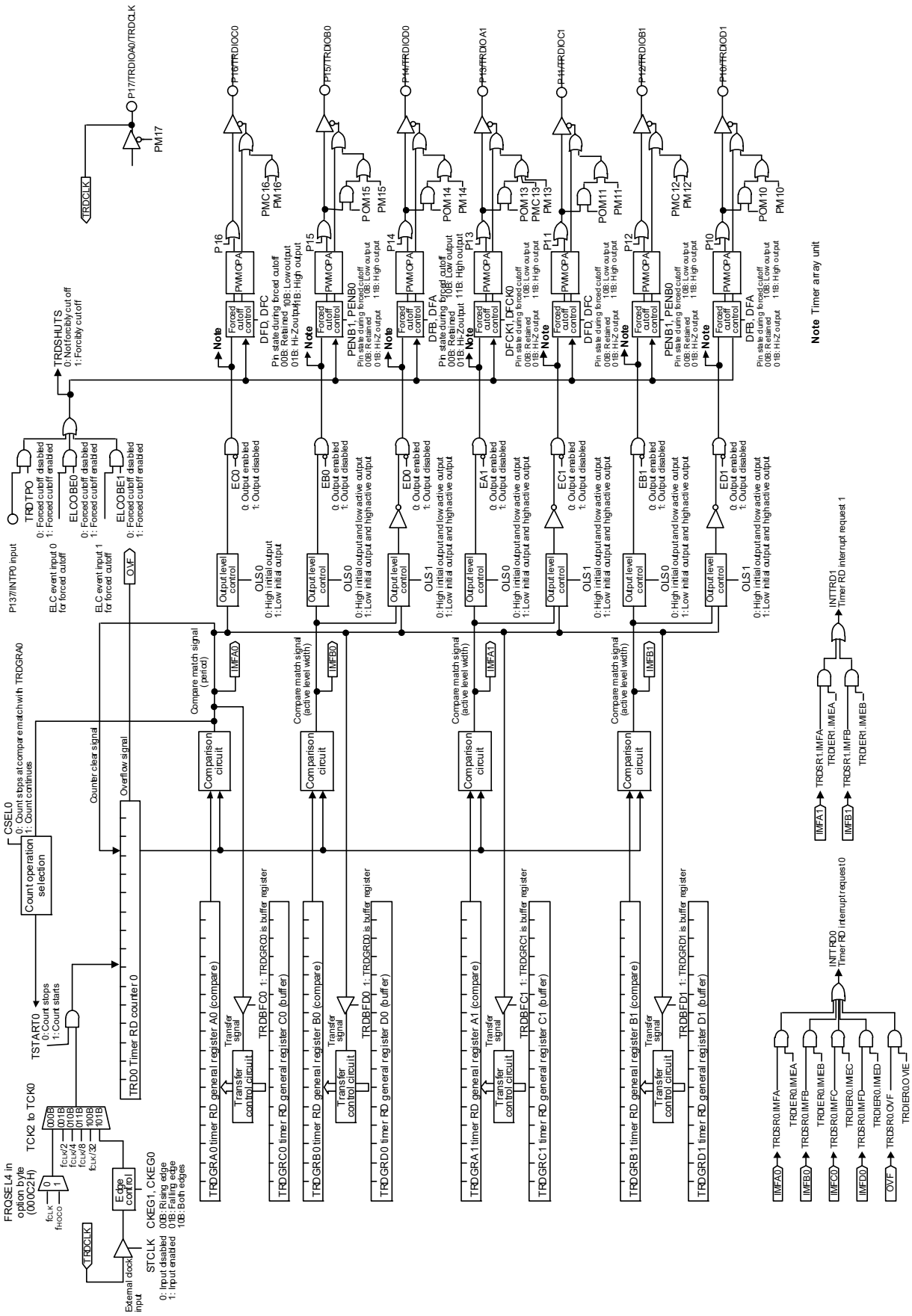

Table 8 - 15 Reset Synchronous PWM Mode Specifications

Item	Specification
Count sources	f_{HOCO} Note, f_{CLK}, $f_{CLK}/2$, $f_{CLK}/4$, $f_{CLK}/8$, $f_{CLK}/32$ External signal input to the TRDCLK pin (active edge selected by a program)
Count operations	The TRD0 register is incremented (the TRD1 register is not used).
PWM waveform	PWM period: 1/fk × (m + 1) Active level of normal-phase: 1/fk × (m - n) Inactive level of counter-phase: 1/fk × (n + 1) fk: Frequency of count source m: Value set in the TRDGRA0 register n: Value set in the TRDGRB0 register (PWM1 output) Value set in the TRDGRA1 register (PWM2 output) Value set in the TRDGRB1 register (PWM3 output) 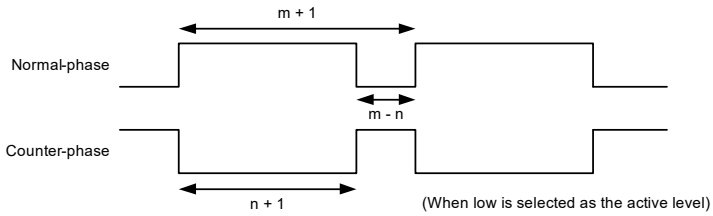
Count start condition	1 (count starts) is written to the TSTART0 bit in the TRDSTR register.
Count stop conditions	• 0 (count stops) is written to the TSTART0 bit when the CSEL0 bit in the TRDSTR register is set to 1. The PWM output pin outputs the initial output level selected by bits OLS0 and OLS1 in the TRDFCR register. • When the CSEL0 bit in the TRDSTR register is set to 0, the count stops at the compare match with the TRDGRA0 register. The PWM output pin outputs the initial output level selected by bits OLS0 and OLS1 in the TRDFCR register.
Interrupt request generation timing	• Compare match (content of the TRD0 register matches content of registers TRDGRj0, TRDGRA1, and TRDGRB1) • TRD0 register overflow
TRDIOA0 pin function	I/O port or TRDCLK (external clock) input
TRDIOB0 pin function	PWM1 output normal-phase output
TRDIOD0 pin function	PWM1 output counter-phase output
TRDIOA1 pin function	PWM2 output normal-phase output
TRDIOC1 pin function	PWM2 output counter-phase output
TRDIOB1 pin function	PWM3 output normal-phase output
TRDIOD1 pin function	PWM3 output counter-phase output
TRDIOC0 pin function	Output inverted every PWM period
INTP0 pin function	Pulse output forced cutoff signal input (input-only port or INTP0 interrupt input)
Read from timer	The count value can be read by reading the TRD0 register.
Write to timer	The value can be written to the TRD0 register.
Selectable functions	• The normal-phase and counter-phase active level and initial output level are selected individually. • Buffer operation (see **8.4.2 Buffer Operation**) • Pulse output forced cutoff signal input (see **8.4.4 Pulse Output Forced Cutoff**)

Note f_{HOCO} is selected only when FRQSEL4 = 1 in the user option byte (000C2H/010C2H). When selecting f_{HOCO} as the count source for timer RD, set f_{CLK} to f_{IH} before setting bit 4 (TRD0EN) in peripheral enable register 1 (PER1). When changing f_{CLK} to a clock other than f_{IH}, clear bit 4 (TRD0EN) in peripheral enable register 1 (PER1) before changing.

Remark j = A, B, C, or D

(1) Operation Example

Figure 8 - 58 Operation Example in Reset Synchronous PWM Mode

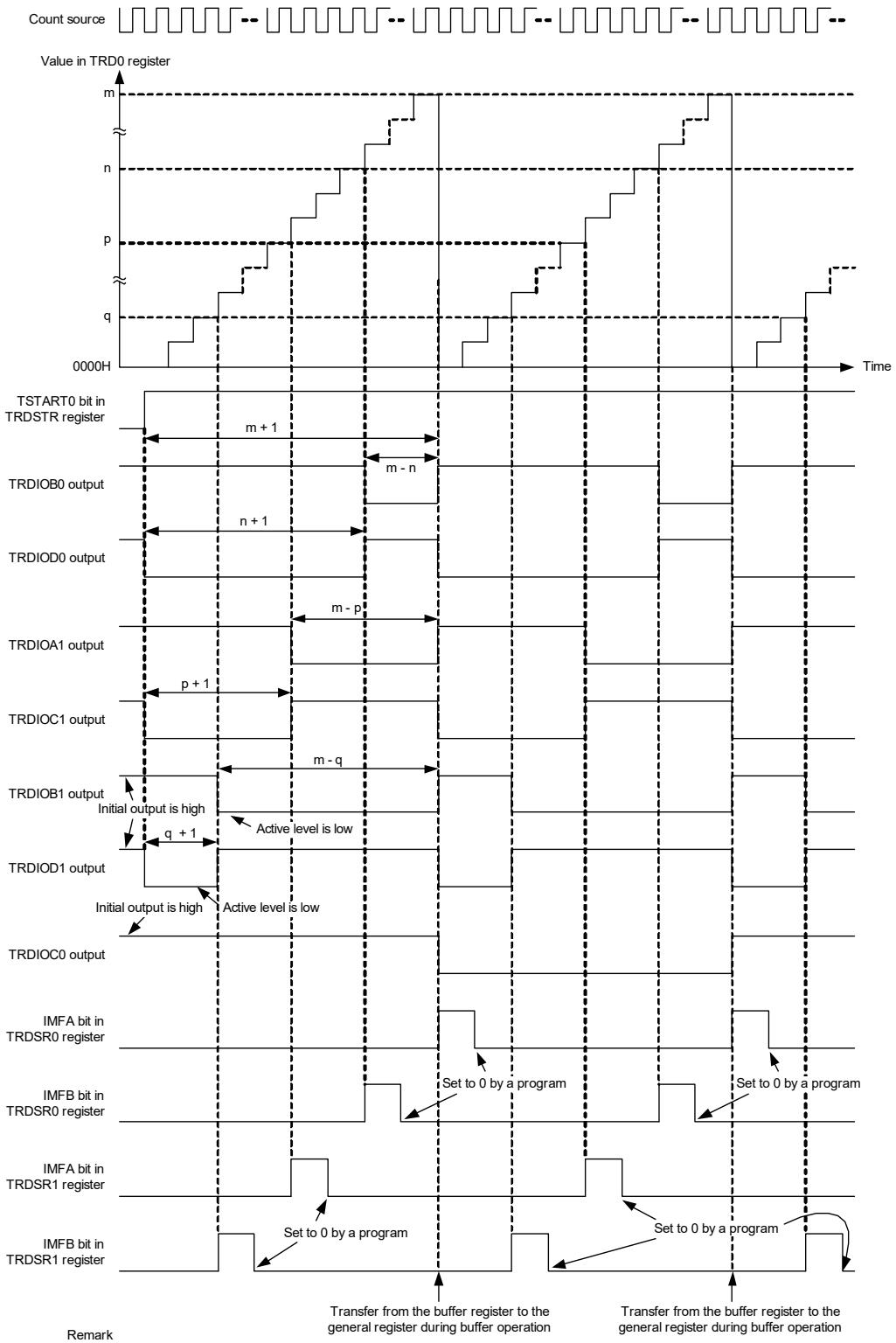

Remark
i = 0 or 1
m: Value set in TRDGRA0 register
n: Value set in TRDGRB0 register
p: Value set in TRDGRA1 register
q: Value set in TRDGRB1 register

The above diagram applies under the following condition:
Bits OLS1 and OLS0 in the TRDFCR register are set to 0 (initial output level is high, active level is low).

8.5.5 Complementary PWM Mode

In this mode, three normal-phases and three counter-phases of the PWM waveform are output with the same period (three-phase, triangular wave modulation, and with dead time).

Figure 8 - 59 shows the Block Diagram of Complementary PWM Mode (For Timer RD0), Table 8 - 16 lists the Complementary PWM Mode Specifications, and Figure 8 - 60 shows the Output Model of Complementary PWM Mode, and Figure 8 - 61 shows an Operation Example in Complementary PWM Mode.

Figure 8 - 59 Block Diagram of Complementary PWM Mode (For Timer RD0)

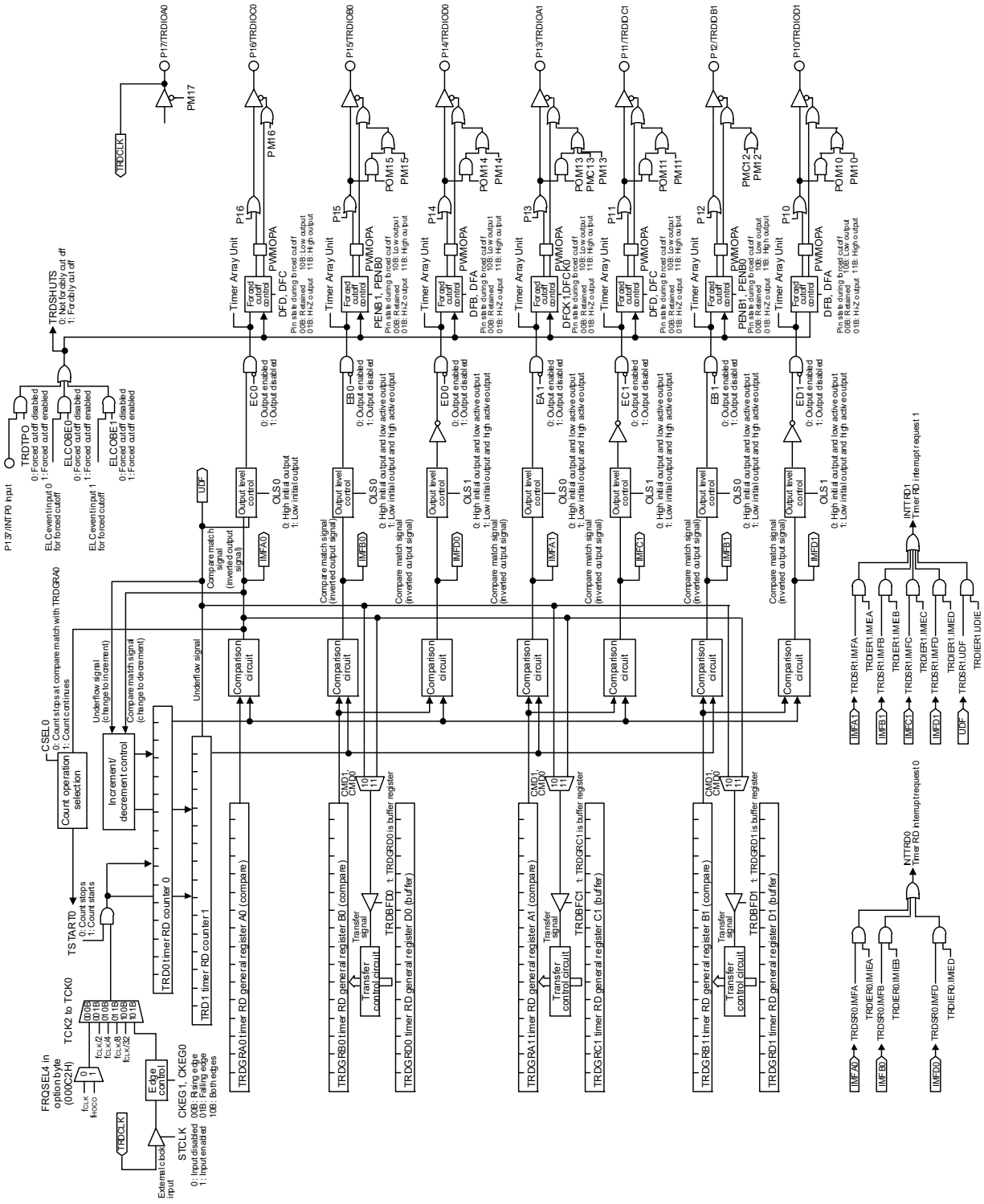

Table 8 - 16 Complementary PWM Mode Specifications

Item	Specification
Count sources	f_{HOCO} Note 1, f_{CLK}, $f_{CLK}/2$, $f_{CLK}/4$, $f_{CLK}/8$, $f_{CLK}/32$ External signal input to the TRDCLK pin (active edge selected by a program) Set bits TCK2 to TCK0 in the TRDCR1 register to the same value (same count source) as bits TCK2 to TCK0 in the TRDCR0 register.
Count operations	Increment or decrement. Registers TRD0 and TRD1 are decremented with the compare match with registers TRD0 and TRDGRA0 during increment operation. When the TRD1 register changes from 0000H to FFFFH during decrement operation, and registers TRD0 and TRD1 are incremented.
PWM operations	PWM period: 1/fk × (m + 2 - p) × 2 Note 2 Dead time: p Active level width of normal-phase: 1/fk × (m - n - p + 1) × 2 Active level width of counter-phase: 1/fk × (n + 1 - p) × 2 fk: Frequency of count source m: Value set in the TRDGRA0 register n: Value set in the TRDGRB0 register (PWM1 output) Value set in the TRDGRA1 register (PWM2 output) Value set in the TRDGRB1 register (PWM3 output) p: Value set in the TRD0 register 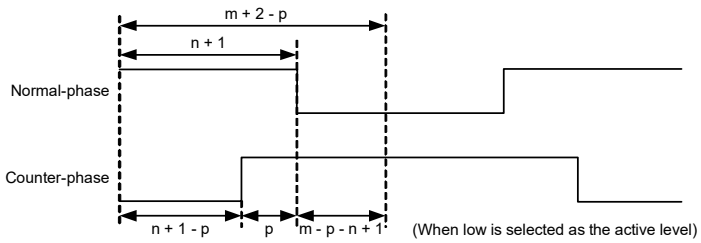
Count start condition	1 (count starts) is written to bits TSTART0 and TSTART1 in the TRDSTR register.
Count stop condition	0 (count stops) is written to bits TSTART0 and TSTART1 in the TRDSTR register when the CSEL0 bit in the TRDSTR register is set to 1. (The PWM output pin outputs the initial output level selected by bits OLS0 and OLS1 in the TRDFCR register.)
Interrupt request generation timing	• Compare match (content of the TRDi register matches content of the TRDGRji register) • TRD1 register underflow
TRDIOA0 pin function	I/O port or TRDCLK (external clock) input
TRDIOB0 pin function	PWM1 output normal-phase output
TRDIOD0 pin function	PWM1 output counter-phase output
TRDIOA1 pin function	PWM2 output normal-phase output
TRDIOC1 pin function	PWM2 output counter-phase output
TRDIOB1 pin function	PWM3 output normal-phase output
TRDIOD1 pin function	PWM3 output counter-phase output
TRDIOC0 pin function	Output inverted every 1/2 period of PWM
INTP0 pin function	Pulse output forced cutoff signal input (input-only port or INTP0 interrupt input)
Read from timer	The count value can be read by reading the TRDi register.
Write to timer	The value can be written to the TRDi register.
Selectable functions	• Pulse output forced cutoff signal input (see **8.4.4 Pulse Output Forced Cutoff**) • The normal-phase and counter-phase active level and initial output level are selected individually. • Transfer timing from the buffer register selection

Note 1. f_{HOCO} is selected only when FRQSEL4 = 1 in the user option byte (000C2H/010C2H). When selecting f_{HOCO} as the count source for timer RD, set f_{CLK} to f_{IH} before setting bit 4 (TRD0EN) in peripheral enable register 1 (PER1). When changing f_{CLK} to a clock other than f_{IH}, clear bit 4 (TRD0EN) in peripheral enable register 1 (PER1) before changing.

Note 2. After a count starts, the PWM period is fixed.

Remark i = 0 or 1, j = A, B, C, or D

(1) Operation Example

Figure 8 - 60 Output Model of Complementary PWM Mode

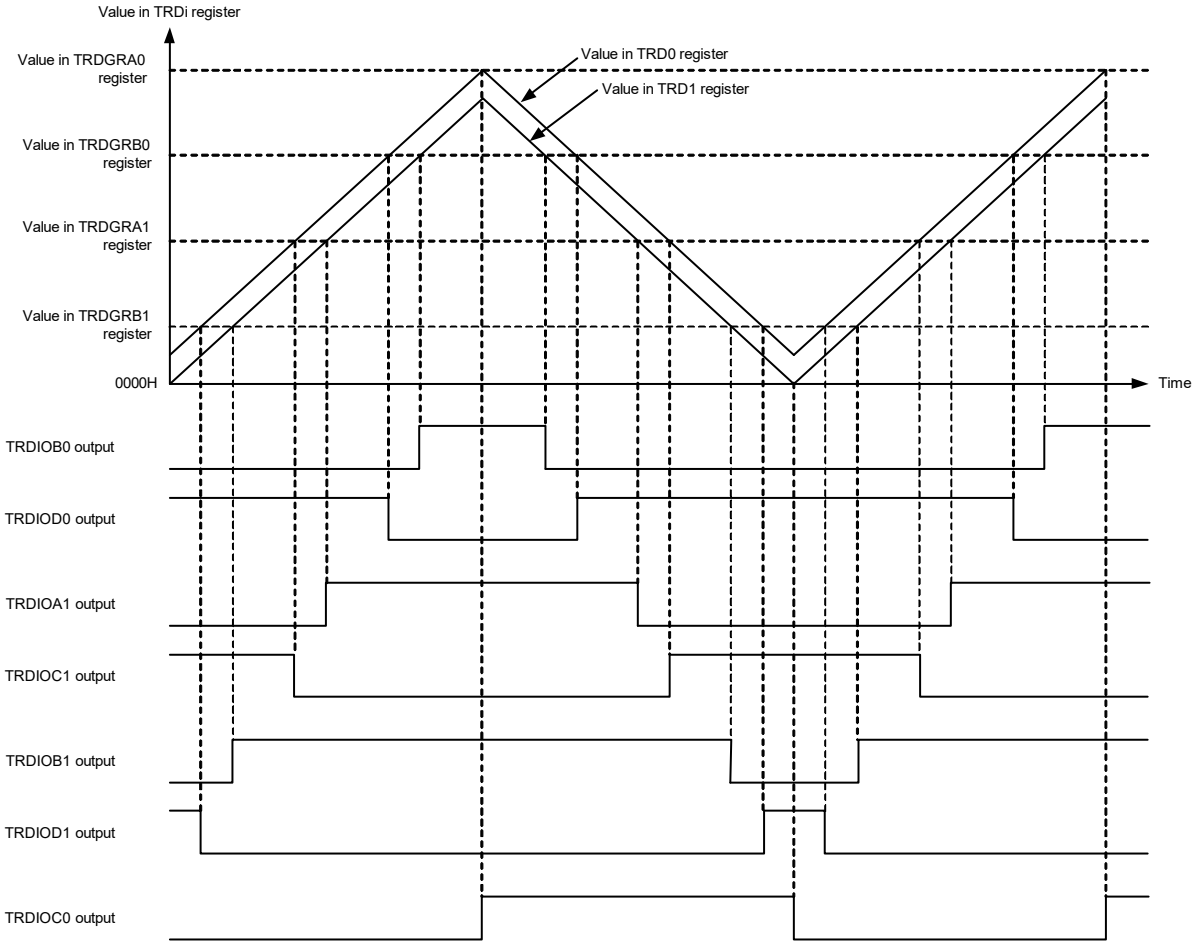

Remark i = 0 or 1

Figure 8 - 61 Operation Example in Complementary PWM Mode

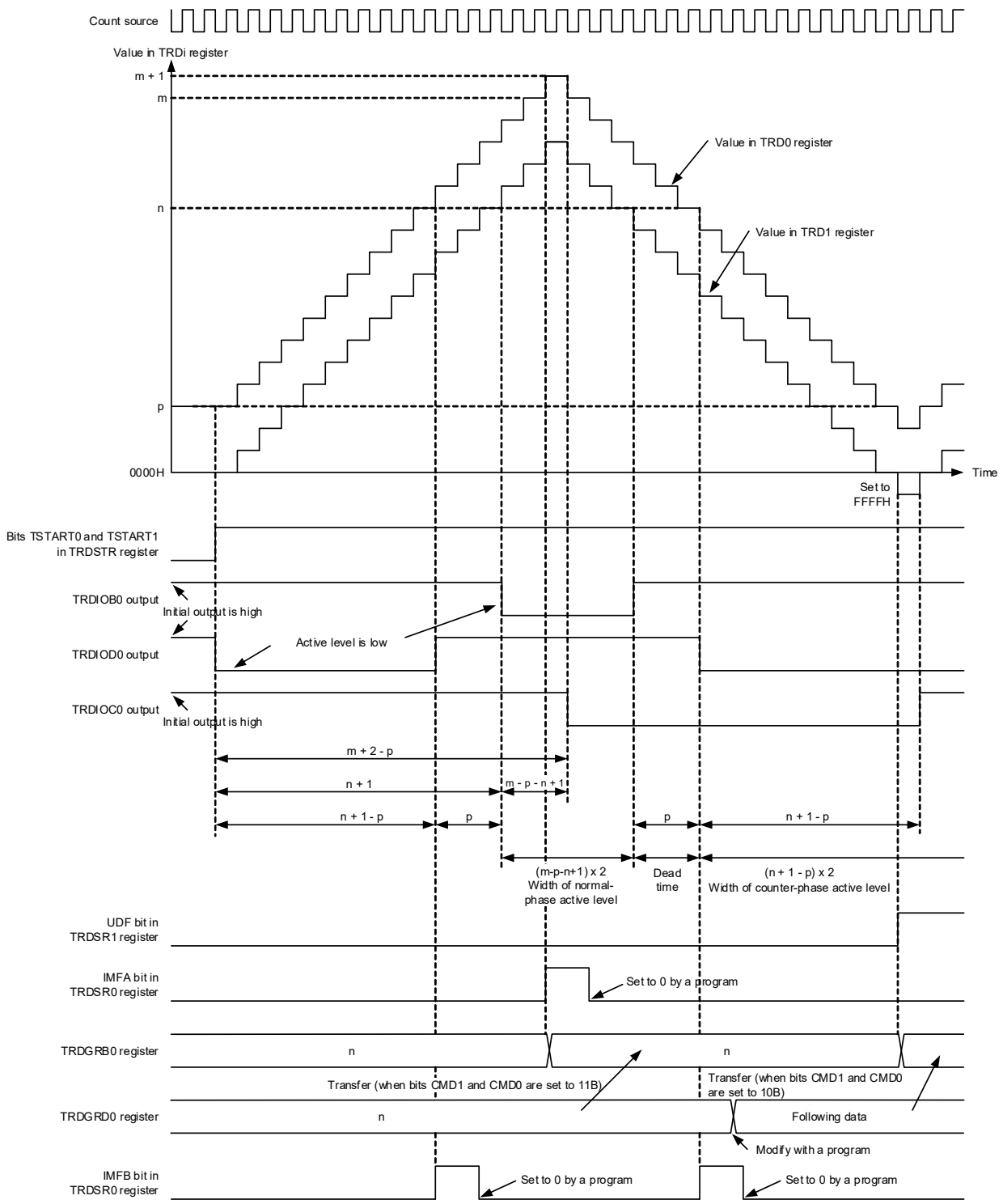

Remark
CMD0, CMD1: Bits in TRDFCR register
i = 0 or 1
m: Value set in TRDGRA0 register
n: Value set in TRDGRB0 register
p: Value set in TRD0 register

The above diagram applies under the following condition:
Bits OLS1 and OLS0 in TRDFCR are set to 0 (initial output level is high, active level is low for normal-phase and counter-phase).

(2) Transfer Timing from Buffer Register

- Transfer from the TRDGRD0, TRDGRC1, or TRDGRD1 register to the TRDGRB0, TRDGRA1, or TRDGRB1 register.
  When bits CMD1 and CMD0 in the TRDFCR register are set to 10B, the content is transferred when the TRD1 register underflows.
  When bits CMD1 and CMD0 are set to 11B, the content is transferred at compare match between registers TRD0 and TRDGRA0.

8.5.6 PWM3 Mode

In this mode, two PWM waveforms are output with the same period.

Figure 8 - 62 shows the Block Diagram of PWM3 Mode (For Timer RD0), Table 8 - 17 lists the PWM3 Mode Specifications, and Figure 8 - 63 shows an Operation Example in PWM3 Mode.

Figure 8 - 62 Block Diagram of PWM3 Mode (For Timer RD0)

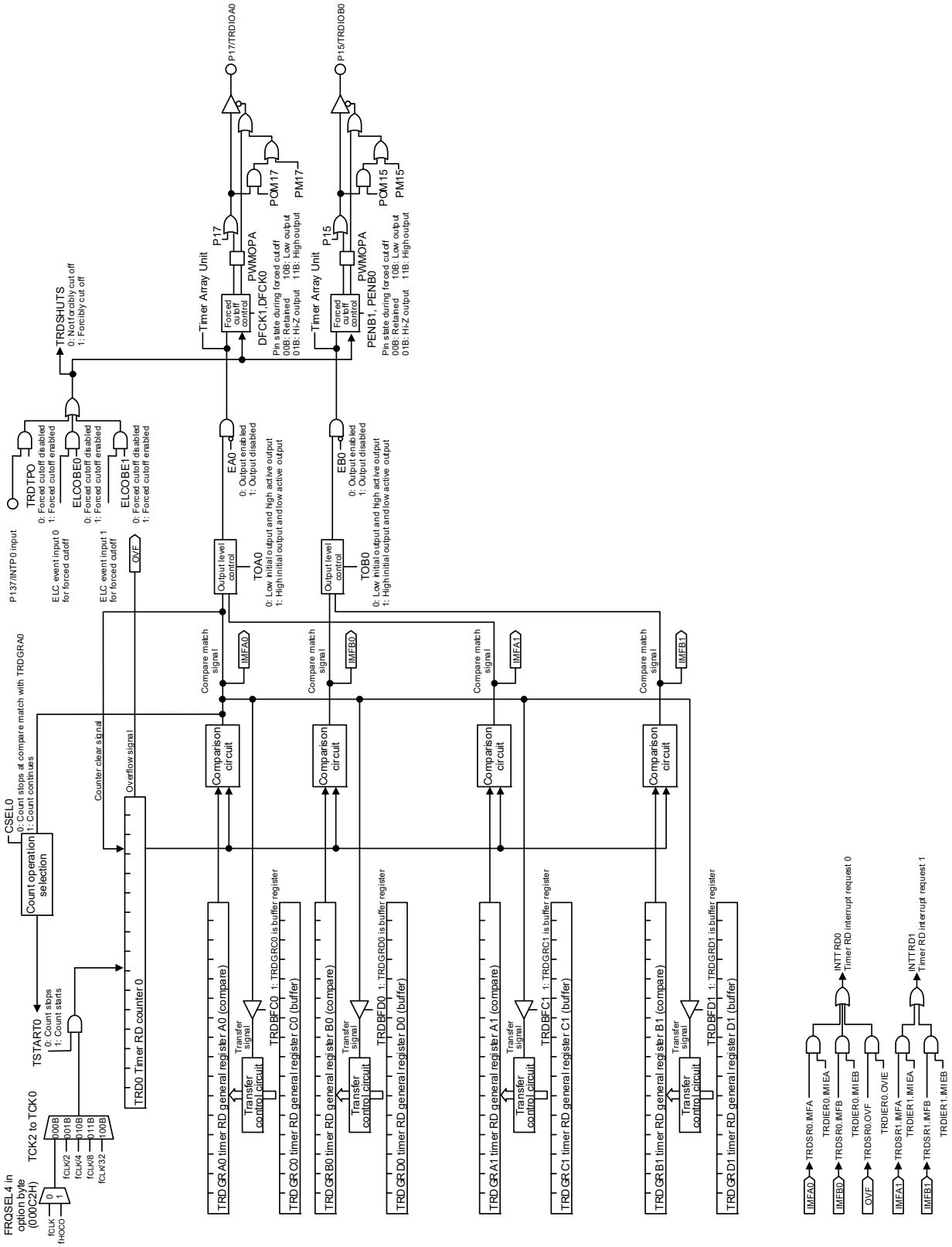

Table 8 - 17 PWM3 Mode Specifications

Item	Specification
Count sources	f_{HOCO} Note, f_{CLK}, $f_{CLK}/2$, $f_{CLK}/4$, $f_{CLK}/8$, $f_{CLK}/32$
Count operations	The TRD0 register is incremented (the TRD1 register is not used).
PWM waveform	PWM period: 1/fk × (m + 1) Active level width of TRDIOA0 output: 1/fk × (m - n) Active level width of TRDIOB0 output: 1/fk × (p - q) fk: Frequency of count source m: Value set in the TRDGRA0 register n: Value set in the TRDGRA1 register p: Value set in the TRDGRB0 register q: Value set in the TRDGRB1 register 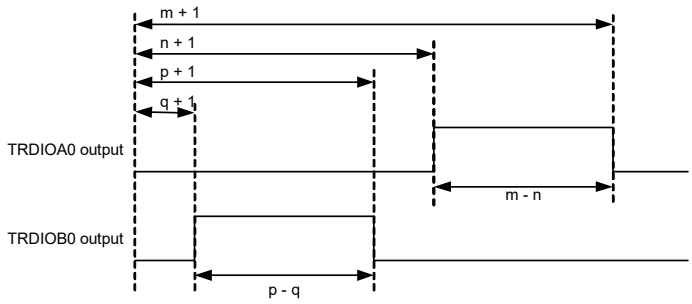 (When high is selected as the active level)
Count start condition	1 (count starts) is written to the TSTART0 bit in the TRDSTR register.
Count stop conditions	• 0 (count stops) is written to the TSTART0 bit in the TRDSTR register when the CSEL0 bit in the TRDSTR register is set to 1. The PWM output pin holds the output level before the count stops. • When the CSEL0 bit in the TRDSTR register is set to 0, the count stops at compare match with the TRDGRA0 register. The PWM output pin holds the level after output change by compare match.
Interrupt request generation timing	• Compare match (content of the TRDi register matches content of the TRDGRji register) • TRD0 register overflow
TRDIOA0, TRDIOB0 pin function	PWM output
TRDIOA0, TRDIOD0, and TRDIOA1 to TRDIOD1 pin function	I/O port
INTP0 pin function	Pulse output forced cutoff signal input (input-only port or INTP0 interrupt input)
Read from timer	The count value can be read by reading the TRD0 register.
Write to timer	The value can be written to the TRD0 register.
Selectable functions	• Pulse output forced cutoff signal input (see **8.4.4 Pulse Output Forced Cutoff**) • Active level selectable for each pin • Buffer operation (see **8.4.2 Buffer Operation**)

Note f_{HOCO} is selected only when FRQSEL4 = 1 in the user option byte (000C2H/010C2H). When selecting f_{HOCO} as the count source for timer RD, set f_{CLK} to f_{IH} before setting bit 4 (TRD0EN) in peripheral enable register 1 (PER1). When changing f_{CLK} to a clock other than f_{IH}, clear bit 4 (TRD0EN) in peripheral enable register 1 (PER1) before changing.

Remark i = 0 or 1, j = A, B, C, or D

(1) Operation Example

Figure 8 - 63 Operation Example in PWM3 Mode

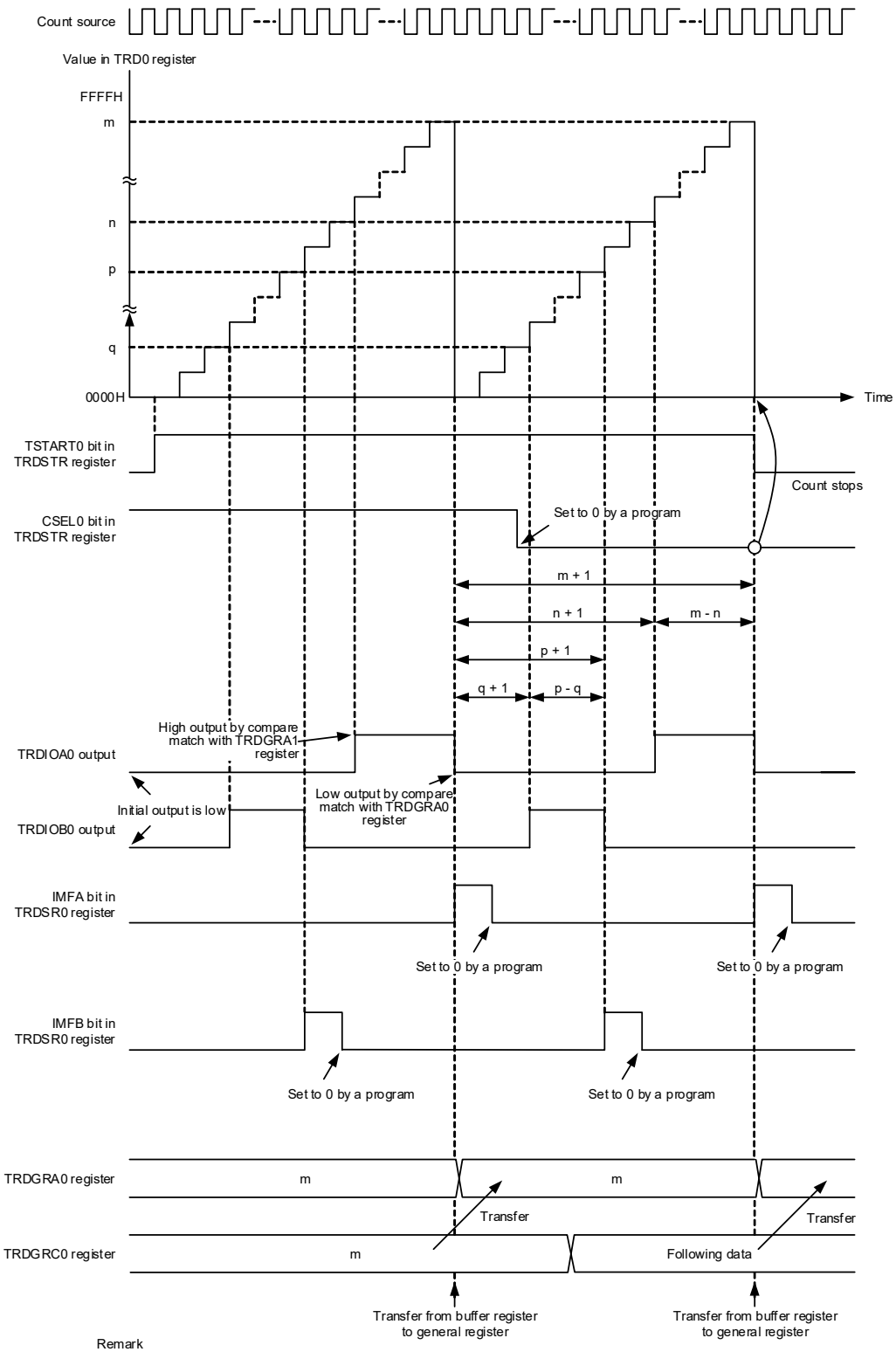

Remark
j = A or B
m: Value set in TRDGRA0 register
n: Value set in TRDGRA1 register
p: Value set in TRDGRB0 register
q: Value set in TRDGRB1 register

The above diagram applies under the following conditions:
- Both the TOA0 and TOB0 bits in the TRDOCR register are set to 0 (initial output is low, high output by compare match with TRDGRj1 register, low output by compare match with TRDGRj0 register).
- The TRDBFC0 bit in the TRDMR register is set to 1 (TRDGRC0 register is buffer register for TRDGRA0 register).

8.6 Timer RD Interrupt

Timer RD generates the timer RDi (i = 0 or 1) interrupt request from six sources for each timer RD0 and timer RD1. Table 8 - 18 lists the Registers Associated with Timer RD Interrupt and Figure 8 - 64 shows the Timer RD Interrupt Block Diagram.

Table 8 - 18 Registers Associated with Timer RD Interrupt

	Timer RD Status Register	Timer RD Interrupt Enable Register	Interrupt Request Flag (Register)	Interrupt Mask Flag (Register)	Priority Specification Flag (Register)
Timer RD0	TRDSR0	TRDIER0	TRDIF0 (IF2H)	TRDMK0 (MK2H)	TRDPR00 (PR02H) TRDPR10 (PR12H)
Timer RD1	TRDSR1	TRDIER1	TRDIF1 (IF2H)	TRDMK1 (MK2H)	TRDPR01 (PR02H) TRDPR11 (PR12H)

Figure 8 - 64 Timer RD Interrupt Block Diagram

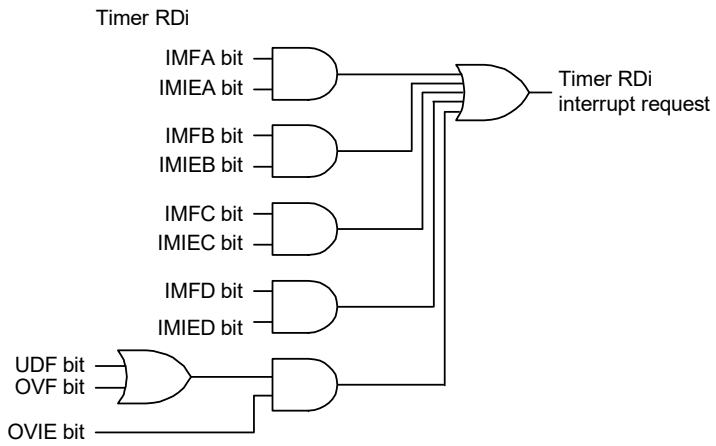

i = 0 to 1
IMFA, IMFB, IMFC, IMFD, OVF, UDF: TRDSRi register bit
IMIEA, IMIEB, IMIEC, IMIED, OVIE: TRDIERi register bit

Since the interrupt source (timer RD interrupt) is generated by a combination of multiple interrupt request sources for timer RD, the following differences from other maskable interrupts except timer RG interrupt apply:

- When a bit in the TRDSRi register is 1 and the corresponding bit in the TRDIERi register is 1 (interrupt enabled), the TRDIFi bit in the IF2H register is set to 1 (interrupt requested).
- If multiple bits in the TRDIERi register are set to 1, use the TRDSRi register to determine the source of the interrupt request.
- Since the bits in the TRDSRi register are not automatically set to 0 even if the interrupt is acknowledged, set the corresponding bit to 0 in the interrupt routine.

- When status flags of interrupt sources (applicable status flags) of the timer RD are set to 0 and their interrupts are disabled in timer RD interrupt enable register i (TRDIERi), use either one of the following methods (a) to (c).

(a) Set 00H (all interrupts disabled) to timer RD interrupt enable register i (TRDIERi) and write 0 to applicable status flags.

(b) When there are bits set to 1 (enabled) in timer RD interrupt enable register i (TRDIERi) and status flags of interrupt sources related to their bits are 0, write 0 to applicable status flags.

Example: To clear the IMFB bit to 0 when bits IMIEA and OVIE are set to 1 (interrupt-enabled) and the IMIEB bit is set to 0 (interrupt-disabled).

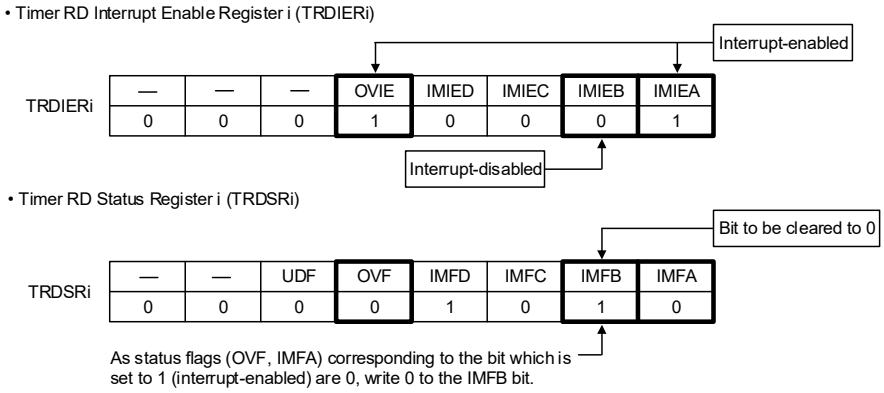

(c) When there are bits set to 1 (interrupt-enabled) in timer RD interrupt enable register i (TRDIERi) and status flags of interrupt sources related to their bits are 1, write 0 to these status flags and applicable status flags at the same time.

Example: To clear the IMFB bit to 0 when the IMIEA is set to 1 (interrupt-enabled) and the IMIEB is set to 0 (interrupt-disabled).

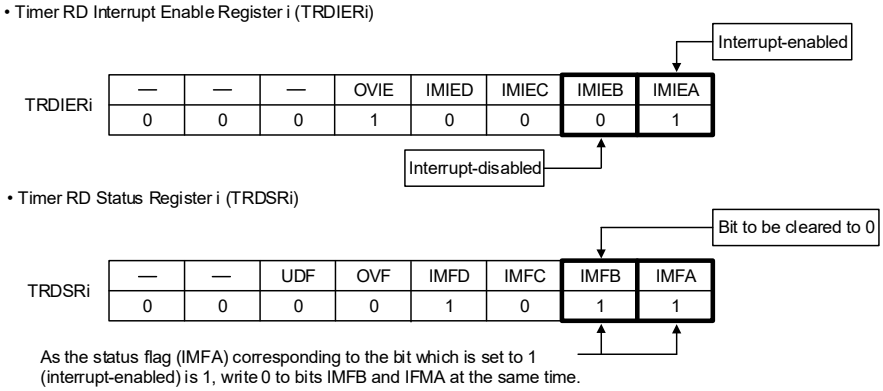

8.7 Cautions for Timer RD

8.7.1 SFR Read/Write Access

When setting timer RD, set the TRD0EN bit in the PER1 register to 1 first. If the TRD0EN bit is 0, writes to the timer RD control registers are ignored and all the read values are the initial values (except for the port registers and the port mode registers).

The following registers must not be rewritten during count operation:
TRDELC, TRDMR, TRDPMR, TRDFCR, TRDOER1, TRDPTO bit in TRDOER2, TRDDFi, TRDCRi, TRDIORAi, TRDIORCi, TRDPOCRi

(1) TRDSTR Register

- The TRDSTR register can be set by an 8-bit memory manipulation instruction.
- When the CSELi bit (i = 0 or 1) in the TRDSTR register is set to 0 (count stops at compare match between registers TRDi and TRDGRAi), the count does not stop and the TSTARTi bit remains unchanged even if 0 (count stops) is written to the TSTARTi bit.
  The TSTARTi bit is set to 0 (count stops) only by a compare match with the TRDGRAi register.
  If the CSELi bit is 0 when rewriting the TRDSTR register, write 0 to the TSTARTi bit to change the CSELi bit to 1 without affecting count operation.
  If 1 is written to the TSTARTi bit while the counter is stopped, count may be started.
  To stop counting by a program, set the TSTARTi bit after setting the CSELi bit to 1. Even if 1 is written to the CSELi bit and 0 is written to the TSTARTi bit at the same time (using one instruction), the count cannot be stopped.
- Table 8 - 19 lists the TRDIOji (j = A, B, C, or D) Pin Output Level When Count Stops while using the TRDIOji (j = A, B, C, or D) pin for timer RD output.

Table 8 - 19 TRDIOji (j = A, B, C, or D) Pin Output Level When Count Stops

Count Stop	TRDIOji Pin Output When Count Stops
When the CSELi bit is set to 1, write 0 to the TSTARTi bit and the count stops.	The pin holds the output level immediately before the count stops. (The pin outputs the initial output level selected by bits OLS0 and OLS1 in the TRDFCR register in timer RD complementary and reset synchronous PWM modes.)
When the CSELi bit is set to 0, the count stops at compare match with registers TRDi and TRDGRAi.	The pin holds the output level after the output changes by compare match. (The pin outputs the initial output level selected by bits OLS0 and OLS1 in the TRDFCR register in timer RD complementary and reset synchronous PWM modes.)

Remark i = 0 or 1, j = A, B, C, or D

(2) TRDDFi Register (i = 0 or 1)
Set bits DFCK0 and DFCK1 in the TRDDFi register before starting count operation.

(3) TRDi Register (i = 0 or 1)
- If the TRDi register is set to 0000H and a value is written to the TRDi register at the same timing, the value written to the register has priority.

8.7.2 Mode Switching

- Set the count to stopped (set bits TSTART0 and TSTART1 to 0) before switching modes during operation.
- Set bits TRDIF0 and TRDIF1 to 0 before changing bits TSTART0 and TSTART1 from 0 to 1. Refer to **CHAPTER 24 INTERRUPT FUNCTIONS** for details.

8.7.3 Count Source

- Switch the count source after the count stops.

[Changing procedure]

(1) Set the TSTARTi bit (i = 0 or 1) in the TRDSTR register to 0 (count stops).
(2) Change bits TCK0 to TCK2 in the TRDCRi register.

- When selecting f_{HOCO} (64 MHz or 48 MHz) as the count source for timer RD, set f_{CLK} to f_{IH} before setting bit 4 (TRD0EN) in peripheral enable register 1 (PER1). When changing f_{CLK} to a clock other than f_{IH}, clear bit 4 (TRD0EN) in peripheral enable register 1 (PER1) before changing.

8.7.4 Input Capture Function

- Set the pulse width of the input capture signal to three or more cycles of the timer RD operating clock.
- The value of the TRDi register is transferred to the TRDGRji register two to three cycles of the timer RD operating clock (f_{CLK}) after the input capture signal is applied to the TRDIOji pin (i = 0 or 1, j = A, B, C, or D) (when no digital filter is used).
- In input capture mode, an input capture interrupt request for the active edge of the TRDIOji input is also generated when the TRDTSTARTi bit in the TRDSTR register is 0 (count stops) if the edge selected by bits TRDIOj0 and TRDIOj1 in the TRDIORji register is input to the TRDIOji pin (i = 0 or 1; j = A, B, C, or D).

8.7.5 Procedure for Setting Pins TRDIOAi, TRDIOBi, TRDIOCi, and TRDIODi (i = 0 or 1)

After a reset, the I/O ports multiplexed with pins TRDIOAi, TRDIOBi, TRDIOCi, and TRDIODi function as input ports.

• To output from pins TRDIOAi, TRDIOBi, TRDIOCi, and TRDIODi, use the following setting procedure:

Changing procedure

(1) Set the mode and the initial value.
(2) Enable output from pins TRDIOAi, TRDIOBi, TRDIOCi, and TRDIODi (TRDOER1 register).
(3) Set the port register bits corresponding to pins TRDIOAi, TRDIOBi, TRDIOCi, and TRDIODi to 0.
(4) Set the port mode register bits corresponding to pins TRDIOAi, TRDIOBi, TRDIOCi, and TRDIODi to output mode. (Output is started from pins TRDIOAi, TRDIOBi, TRDIOCi, and TRDIODi)
(5) Start the count (set bits TSTART0 and TSTART1 to 1).

• To change the port mode register bits corresponding to pins TRDIOAi, TRDIOBi, TRDIOCi, and TRDIODi from output mode to input mode, use the following setting procedure:

Changing procedure

(1) Set the port mode register bits corresponding to pins TRDIOAi, TRDIOBi, TRDIOCi, and TRDIODi to input mode (input is started from pins TRDIOAi, TRDIOBi, TRDIOCi, and TRDIODi).
(2) Set to the input capture function.
(3) Start the count (set bits TSTART0 and TSTART1 to 1).

• When switching pins TRDIOAi, TRDIOBi, TRDIOCi, and TRDIODi from output mode to input mode, input capture operation may be performed depending on the pin states. When the digital filter is not used, edge detection is performed after two or more cycles of the operation clock have elapsed. When the digital filter is used, edge detection is performed after up to five cycles of the sampling clock.

8.7.6 External clock TRDCLK

Set the pulse width of the external clock applied to the TRDCLK pin to three or more cycles of the timer RD operating clock.

8.7.7 Reset Synchronous PWM Mode

• When reset synchronous PWM mode is used for motor control, make sure OLS0 = OLS1.
• Set to reset synchronous PWM mode by the following procedure:

[Changing procedure]

(1) Set the TSTART0 bit in the TRDSTR register to 0 (count stops).
(2) Set bits CMD1 and CMD0 in the TRDFCR register to 00B (timer mode, PWM mode, and PWM3 mode).
(3) Set bits CMD1 and CMD0 to 01B (reset synchronous PWM mode).
(4) Set the other registers associated with timer RD again.

8.7.8 Complementary PWM Mode

- When complementary PWM mode is used for motor control, make sure OLS0 = OLS1.
- Change bits CMD0 and CMD1 in the TRDFCR register in the following procedure.

Changing procedure: When setting to complementary PWM mode (including re-set), or changing the transfer timing from the buffer register to the general register in complementary PWM mode.

(1) Set both the TSTART0 and TSTART1 bits in the TRDSTR register to 0 (count stops).
(2) Set bits CMD1 and CMD0 in the TRDFCR register to 00B (timer mode, PWM mode, and PWM3 mode).
(3) Set bits CMD1 and CMD0 to 10B or 11B (complementary PWM mode).
(4) Set the registers associated with other timer RD again.

Changing procedure: When stopping complementary PWM mode

(1) Set both the TSTART0 and TSTART1 bits in the TRDSTR register to 0 (count stops).
(2) Set bits CMD1 to CMD0 to 00B (timer mode, PWM mode, and PWM3 mode).

- Do not write to the TRDGRA0, TRDGRB0, TRDGRA1, or TRDGRB1 register during operation.
  When changing the PWM waveform, transfer the values written to registers TRDGRD0, TRDGRC1, and TRDGRD1 to registers TRDGRB0, TRDGRA1, and TRDGRB1 using the buffer operation.
  However, to write data to the TRDGRD0, TRDGRC1, or TRDGRD1 register, set bits TRDBFD0, TRDBFC1, and TRDBFD1 to 0 (general register). After this, bits TRDBFD0, TRDBFC1, and TRDBFD1 may be set to 1 (buffer register).
  The PWM period cannot be changed.
- If the value set in the TRDGRA0 register is assumed to be m, the TRD0 register counts m - 1, m, m + 1, m, m - 1, in that order, when changing from increment to decrement operation.
  When changing from m to m + 1, the IMFA bit in the TRDSRi register is set to 1. Also, bits CMD1 and CMD0 in the TRDFCR register are set to 11B (complementary PWM mode, buffer data transferred at compare match between registers TRD0 and TRDGRA0), the content of the buffer registers (TRDGRD0, TRDGRC1, and TRDGRD1) is transferred to the general registers (TRDGRB0, TRDGRA1, and TRDGRB1).
  During operation of m + 1, m, and m - 1, the IMFA bit remains unchanged and data is not transferred to registers such as the TRDGRA0 register.

Figure 8 - 65 Operation at Compare Match between Registers TRD0 and TRDGRA0 in Complementary PWM Mode

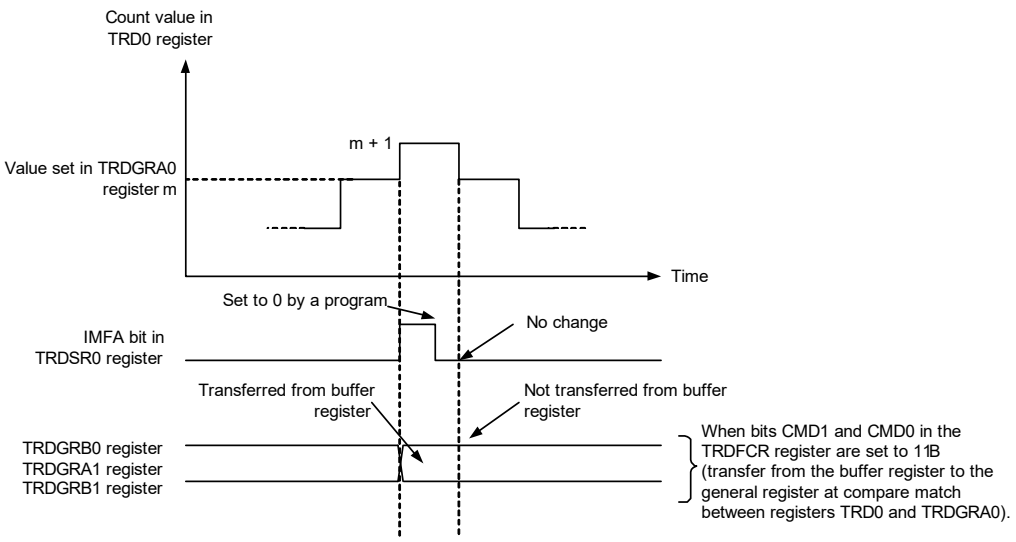

- The TRD1 register counts 1, 0, FFFFH, 0, 1, in that order, when changing from decrement to increment operation.
  Counting from 1, to 0, to FFFFH causes the UDF bit in the TRDSRi register to be set to 1. Also, when bits CMD1 and CMD0 in the TRDFCR register are set to 10B (complementary PWM mode, buffer data transferred at underflow of the TRD1 register), the content of the buffer registers (TRDGRD0, TRDGRC1, and TRDGRD1) is transferred to the general registers (TRDGRB0, TRDGRA1, and TRDGRB1).
  During operation of FFFFH, 0, and 1, data is not transferred to registers such as the TRDGRB0 register.
  Also, at this time, the OVF bit in the TRDSRi register remains unchanged.

Figure 8 - 66 Operation When TRD1 Register Underflows in Complementary PWM Mode

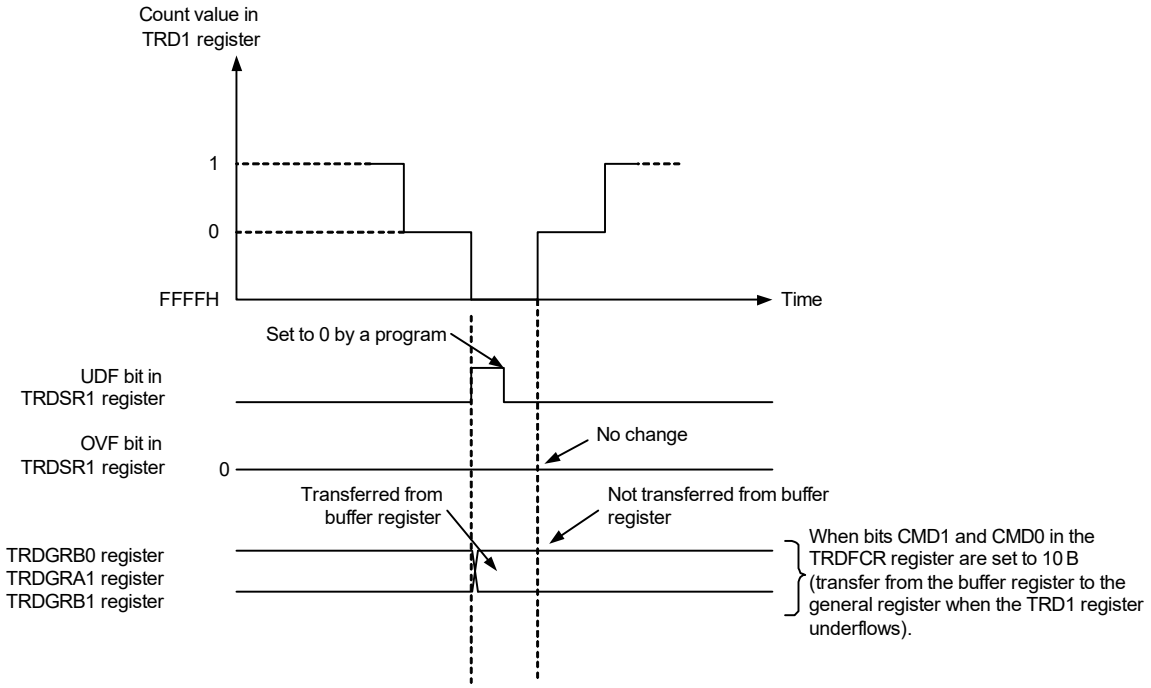

- The timing of data transfer from the buffer register to the general register should be selected using bits CMD0 and CMD1 in the TRDFCR register. However, regardless of the values of bits CMD0 and CMD1, transfer takes place with the following timing when duty cycle is 0% and duty cycle is 100%.

  Value in buffer register ≥ value in TRDGRA0 register (duty cycle is 0%):
  Transfer take place at underflow of the TRD1 register.
  After this, when the buffer register is set to 0001H or above and a smaller value than the value of the TRDGRA0 register, and the TRD1 register underflows for the first time after setting, the value is transferred to the general register. After that, the value is transferred with the timing selected by bits CMD1 and CMD0.

  However, no waveform with duty cycle 0% can be generated while the initial value of the buffer register is FFFFH. To generate a waveform with duty cycle 0%, set the value of the buffer register ≥ TRDGRA0 by writing to the buffer register.

Figure 8 - 67 Operation When Value in Buffer Register ≥ Value in TRDGRA0 Register in Complementary PWM Mode

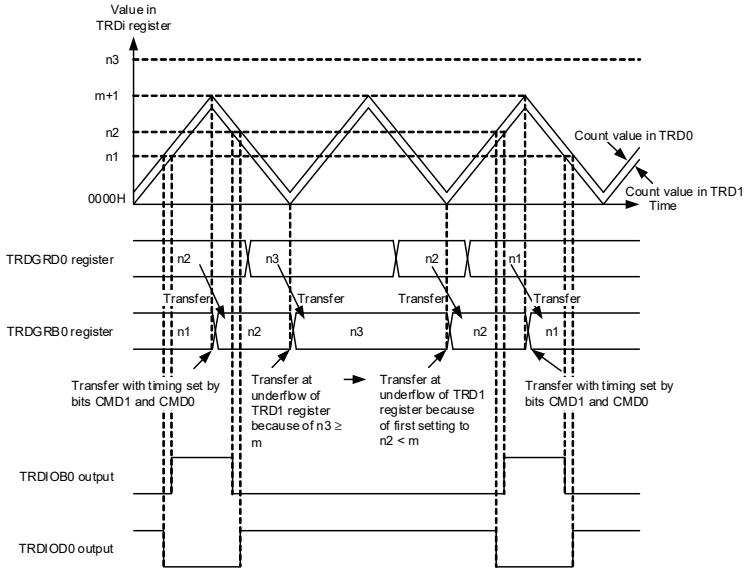

Remark
m: Value set in TRDGRA0 register

The above diagram applies under the following conditions:
- Bits CMD1 and CMD0 in the TRDFCR register are set to 11B (data in the buffer register is transferred at compare match between registers TRD0 and TRDGRA0 in complementary PWM mode).
- Both the OSL0 and OLS1 bits in the TRDFCR register are set to 1 (active high for normal-phase and counter-phase).

When a value that is larger than or equal to the value of the TRDGRA0 register is written to the buffer register, the value of the buffer register is transferred to the general register at underflow of the TRD1 counter, and the output level is fixed to normal-phase with 100% duty cycle and counter-phase with 0% duty cycle.
To cancel the fixed output level, write a value that is larger than or equal to the setting value of the TRD0 register and smaller than or equal to (TRDGRA0 setting value minus TRD0 register setting value) to the buffer register. After the value is written to the buffer register, the value of the buffer register is transferred to the general register at underflow of the TRD1 counter, and a PWM waveform is output regardless of the setting of the CMD0 bit. After a PWM waveform is output, the value of the buffer register is transferred to the general register with the timing specified by the CMD0 bit.
However, the initial value FFFFH of the buffer register cannot be used to set normal-phase output with 100% duty cycle and counter-phase output with 0% duty cycle. Also, while the setting is normal-phase output with 100% duty cycle and counter-phase output with 0% duty cycle, the setting cannot be directly changed to normal-phase output with 0% duty cycle and counter-phase output with 100% duty cycle.

When the value in the buffer register is set to 0000H (duty cycle is 100%):
Transfer takes place at compare match between registers TRD0 and TRDGRA0.
After this, when the buffer register is set to 0001H or above and a smaller value than the value of the TRDGRA0 register, and a compare match occurs between registers TRD0 and TRDGRA0 for the first time after setting, the value is transferred to the general register. After that, the value is transferred with the timing selected by bits CMD0 and CMD1.

Figure 8 - 68 Operation When Value in Buffer Register is Set to 0000H in Complementary PWM Mode

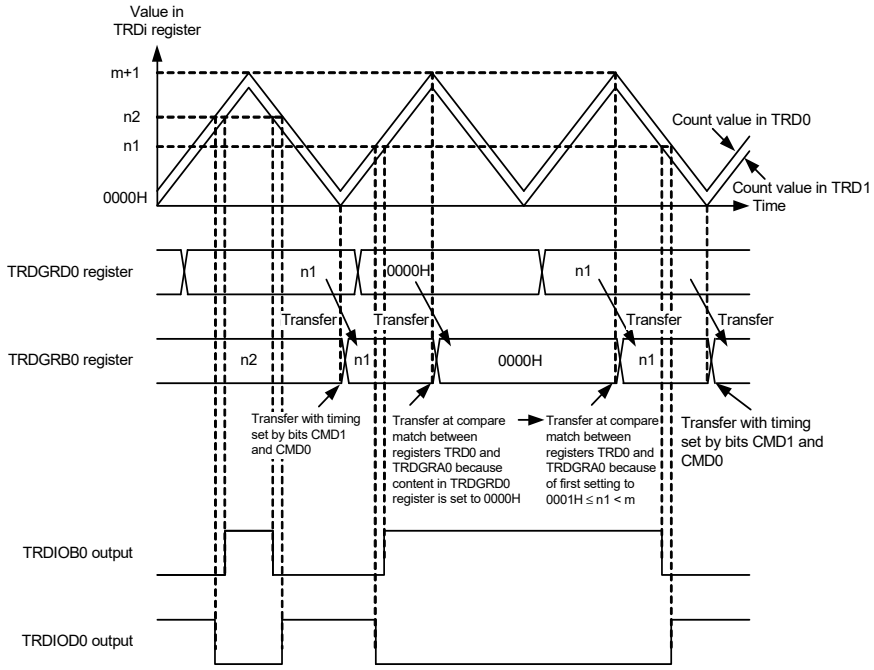

Remark
m: Value set in TRDGRA0 register

The above diagram applies under the following conditions :
- Bits CMD1 and CMD0 in the TRDFCR register are set to 10B (data in the buffer register is transferred at underflow of the TRD1 register in PWM mode).
- Both the OLS0 and OLS1 bits in the TRDFCR register are set to 1 (active high for normal-phase and counter-phase).

When 0000H is written to the buffer register, the value of the buffer register is transferred to the general register at a compare match between registers TRD0 and TRDGRA0, and the output level is fixed to normal-phase with 0% duty cycle and counter-phase with 100% duty cycle.
To cancel the fixed output level, write a value that is larger than or equal to the setting value of the TRD0 register and smaller than or equal to (TRDGRA0 setting value minus TRD0 register setting value) to the buffer register. After the value is written to the buffer register, the value of the buffer register is transferred to the general register at underflow of the TRD1 counter, and a PWM waveform is output regardless of the setting of the CMD0 bit. After a PWM waveform is output, the value of the buffer register is transferred to the general register with the timing specified by the CMD0 bit.
The setting of normal-phase output with 0% duty cycle and counter-phase output with 100% duty cycle cannot be directly changed to normal-phase output with 100% duty cycle and counter-phase output with 0% duty cycle.

8.8 PWM Option Unit A (PWMOPA)

The PWM option unit is used to cutoff and release the output from timer RD and ports with the comparator 0 output, external interrupt 0 (INTP0), and event link controller (ELC) as trigger signals. The PWM option unit is a different function from the pulse forced cutoff incorporated in timer RD.

Table 8 - 20 Functional difference between pulse forced cutoff and output forced cutoff

	Pulse Forced Cutoff of Timer RD	Output Forced Cutoff of PWM Option Unit
Mode supporting forced cutoff	• PWM function • Reset synchronous PWM mode • Complementary PWM mode • PWM3 mode	• Supports all output modes for timer RD • Port output can also be cut off.
Cutoff source	• ELC input • Low-level input of INTP0	• ELC input • INTP0 • Comparator 0 output
Cutoff release	• Counting of timer RD is stopped and cutoff is released via software	• Released via hardware • Released via software (stopping counting is unnecessary)
Pin that can be cut off	Selected from among the pins set for timer RD output from P17/TRDIOA0, P15/TRDIOB0, P16/TRDIOC0, P14/TRDIOD0, P13/TRDIOA1, P12/TRDIOB1, P11/TRDIOC1, P10/TRDIOD1.	Selected from among P17/TRDIOA0, P15/TRDIOB0, P16/TRDIOC0, P14/TRDIOD0, P13/TRDIOA1, P12/TRDIOB1, P11/TRDIOC1, and P10/TRDIOD1. Port output can also be cut off.
Port state selection at cutoff	• High-impedance output • Low-level output • High-level output	• High-impedance output • Low-level output • High-level output However, when port output is cut off, only high-impedance output can be selected.

Caution When pulse forced cutoff and output forced cutoff are used simultaneously, the same cutoff source should not be selected.

8.8.1 Overview of PWM option unit

The PWM option unit has the following functions.

- Comparator 0, external interrupt 0, and the event link controller can be selected as an output cutoff source.
- When comparator 0 or external interrupt 0 is an output forced cutoff source, the edge to become a cutoff source can be selected.
- Software release and hardware release can be selected for output forced cutoff release.
- High-level, low-level, and high-impedance can be selected for the output level at cutoff.

Figure 8 - 69 PWMOPA control logic

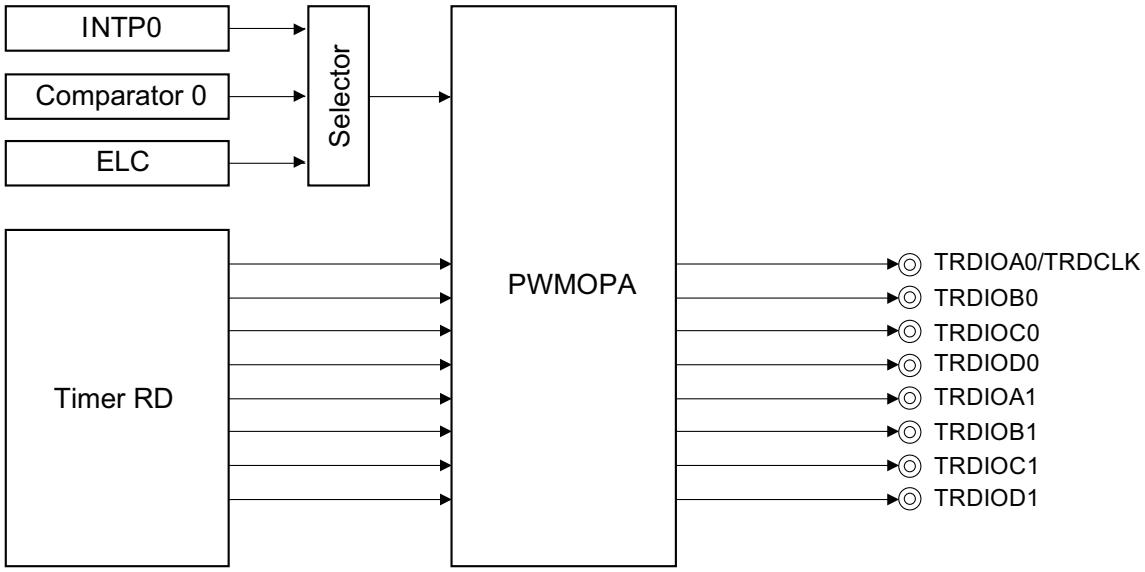

8.8.2 Registers controlling PWM option unit

Table 8 - 21 lists the registers controlling the PWM option unit.

Table 8 - 21 Registers Controlling PWMOPA

Function	Symbol
PWMOPA control register 0	OPCTL0
PWMOPA cutoff control register 0	OPDF0
PWMOPA cutoff control register 1	OPDF1
PWMOPA edge selection register	OPEDGE
PWMOPA status register	OPSR

(1) PWMOPA control register 0 (OPCTL0)

This is a control register of PWMOPA.

The OPCTL0 register can be set by an 8-bit memory manipulation instruction.

Reset signal generation clears this register to 00H.

Figure 8 - 70 Format of PWMOPA control register 0 (OPCTL0)

Address: F0358H After Reset: 00H R/W

Symbol	7	6	5	4	3	2	1	0
OPCTL0	0	HAZAD_SET	IN_EG	IN_SEL1	IN_SEL0	ACT	HZ_REL	HS_SEL

HAZAD_SET	Output cutoff hazard control selection[Note 1]
0	Hazard measure disabled
1	Hazard measure enabled

IN_EG	Output forced cutoff source edge/output forced cutoff release edge selection[Notes 2, 3]
0	Rising edge: Output forced cutoff Falling edge: Output forced cutoff release
1	Rising edge: Output forced cutoff release Falling edge: Output forced cutoff

IN_SEL1	IN_SEL0	Cutoff source selection[Notes 2, 4, 5]
0	0	No output cutoff source selection
0	1	Comparator 0 output
1	0	INTP0 pin input
1	1	Event input from ELC

ACT	When software release is selected: Software release timing selection
0	When HZ_REL is set to 1 via software, forced cutoff is released and pulse output is resumed.
1	When HZ_REL is set to 1, forced cutoff is released and pulse output is resumed at the following timing. • Timer RD complementary PWM mode: Output forced cutoff is released at the TRDIOC0 edge timing selected in the OPEDGE register and pulse output is resumed. • Timer RD reset synchronous PWM mode: Output forced cutoff is released when the TRD0 count becomes 0000H. • Other than the modes above: TRDIOj0 (j = A, B, C, D) forced cutoff is released when the TRD0 count becomes 0000H. TRDIOj1 (j = A, B, C, D) forced cutoff is released when the TRD1 count becomes 0000H.[Note 6]

HZ_REL	When software release is selected: Output cutoff release control
0	Output forced cutoff continues (if forced cutoff is released, the HZ_REL bit becomes 0).[Note 7]
1	Output forced cutoff is released and pulse output is resumed.[Note 8]
The value that can be read from or written to the HZ_REL bit differs depending on the state. • Normal state: 1 or 0 is written and only 0 can be read. • Output forced cutoff state: Only 1 can be written and only 1 can be read	

HS_SEL	Output forced cutoff release mode selection
0	Released via hardware When releasing output forced cutoff via hardware, the cutoff release timing varies depending on the operating mode of timer RD. • Timer RD complementary PWM mode: After a cutoff release source is detected, output forced cutoff is released at the TRDIOC0 edge timing selected in OPEDGE. • Timer RD reset synchronous PWM mode: After a cutoff release source is detected, output forced cutoff is released when the TRD0 count becomes 0000H.Note 6 • Other than the timer RD modes above: After a cutoff release source is detected, TRDIOj0 (j = A, B, C, D) output forced cutoff is released when the TRD0 count becomes 0000H. TRDIOj1 (j = A, B, C, D) output forced cutoff is released when the TRD1 count becomes 0000H.Note 9
1	Released via software

Note 1. Do not change it while timer RD is operating.

Note 2. To set, set the IN_SEL1 and IN_SEL0 bits at least three clocks after the IN_EG bit has been set.

Note 3. It is enabled when comparator 0 output or INTP0 pin input is selected as an output cutoff source.

Note 4. To release output forced cutoff with an ELC source, make sure to select software release (set the HS_SEL bit to 1). There is no restriction on output cutoff release with external interrupt 0 (INTP0) and comparator 0.

Note 5. Set the input enabled level period of the comparator 0 output and INTP0 to one clock or longer.

Note 6. When all of bit 15 through bit 0 of the counter becomes 0 while timer RD0 and timer RD1 are operating, the timer RD0 and timer RD1 count values become 0000H.

Note 7. If timer RD operates in the output compare function, PWM function, or PWM3 mode, the operation at output cutoff release differs between cases where 2 channels are used and 1 channel is used.

- If timer RD is used with 2 channels
  If the HZ_REL bit is set to 1 via software, all the cutoff state bits (HZOF0, HZOF1) become 0 (cutoff release) and the HZ_REL bit becomes 0.
- If timer RD is used with 1 channel
  If the HZ_REL bit is set to 1 via software, the cutoff state bits (HZOF0, HZOF1) corresponding to the used timer RD channel become 0 and the HZ_REL bit becomes 0.

Note 8. It cannot be set to 1 if forced cutoff has not occurred.

Note 9. When timer RD operates in the output compare function, PWM function, or PWM3 mode, cutoff cannot be released for channels not operating when the forced cutoff state is released (the cutoff state bits (HZOF0, HZOF1) do not become 0).

(2) PWMOPA cutoff control register 0 (OPDF0)

This register is the PWM output TRDIOj0 (j = A, B, C, D) pulse cutoff control register of PWMOPA.

The OPDF0 register can be set by an 8-bit memory manipulation instruction.

Reset signal generation clears this register to 00H.

Figure 8 - 71 Format of PWMOPA cutoff control register 0 (OPDF0)

Address: F0359H After Reset: 00H R/W

Symbol	7	6	5	4	3	2	1	0
OPDF0	DFD01	DFD00	DFC01	DFC00	DFB01	DFB00	DFA01	DFA00

DFD01	DFD00	TRDIOD0 pin output forced cutoff control
0	0	Forced cutoff prohibited
0	1	High-impedance output
1	0	Low-level output
1	1	High-level output

DFC01	DFC00	TRDIOC0 pin output forced cutoff control
0	0	Forced cutoff prohibited
0	1	High-impedance output
1	0	Low-level output
1	1	High-level output

DFB01	DFB00	TRDIOB0 pin output forced cutoff control
0	0	Forced cutoff prohibited
0	1	High-impedance output
1	0	Low-level output
1	1	High-level output

DFA01	DFA00	TRDIOA0 pin output forced cutoff control
0	0	Forced cutoff prohibited
0	1	High-impedance output
1	0	Low-level output
1	1	High-level output

Caution 1. When the TRDIOj0 (j = A, B, C, D) pin is used for port output with forced cutoff enabled, select high-impedance output.

Caution 2. Do not change the register value in the forced cutoff state.

Caution 3. When more than one function from among the multiplexed TRDIOji (j = A, B, C, D; i = 0, 1) pin functions by the settings of the PIOR registers, only set a single desired TRDIOji pin function for output.

Example: When TRDIOD0 is selected for P17 in PIOR2, and output from TRDIOD0 is enabled by the setting of the TRDOER1 register, only set the DFD0n (n = 0, 1) bits for TRDIOD0 and set the DFA0n (n = 0, 1) bits to prohibit forced cutoff for TRDIOA0.

(3) PWMOPA cutoff control register 1 (OPDF1)

This register is the PWM output TRDIOj1 (j = A, B, C, D) pulse cutoff control register of PWMOPA.

The OPDF1 register can be set by an 8-bit memory manipulation instruction.

Reset signal generation clears this register to 00H.

Figure 8 - 72 Format of PWMOPA cutoff control register 1 (OPDF1)

Address: F035AH After Reset: 00H R/W

Symbol	7	6	5	4	3	2	1	0
OPDF1	DFD11	DFD10	DFC11	DFC10	DFB11	DFB10	DFA11	DFA10

DFD11	DFD10	TRDIOD1 pin output forced cutoff control
0	0	Forced cutoff prohibited
0	1	High-impedance output
1	0	Low-level output
1	1	High-level output

DFC11	DFC10	TRDIOC1 pin output forced cutoff control
0	0	Forced cutoff prohibited
0	1	High-impedance output
1	0	Low-level output
1	1	High-level output

DFB11	DFB10	TRDIOB1 pin output forced cutoff control
0	0	Forced cutoff prohibited
0	1	High-impedance output
1	0	Low-level output
1	1	High-level output

DFA11	DFA10	TRDIOA1 pin output forced cutoff control
0	0	Forced cutoff prohibited
0	1	High-impedance output
1	0	Low-level output
1	1	High-level output

Caution 1. When the TRDIOj1 (j = A, B, C, D) pin is used for port output with forced cutoff enabled, select high-impedance output.

Caution 2. Do not change the register value in the forced cutoff state.

Caution 3. When more than one function from among the multiplexed TRDIOji (j = A, B, C, D; i = 0, 1) pin functions by the settings of the PIOR registers, only set a single desired TRDIOji pin function for output.

Example: When TRDIOA1 is selected for P16 in PIOR2, and output from TRDIOA1 is enabled by the setting of the TRDOER1 register, only set the DFA1n (n = 0, 1) bits for TRDIOA1 and set the DFC1n (n = 0, 1) bits to prohibit forced cutoff for TRDIOC1.

(4) PWMOPA edge selection register (OPEDGE)

This register selects the timing for cutoff release when timer RD is set to the complementary PWM mode and output forced cutoff is released by hardware.

The OPEDGE register can be set by an 8-bit memory manipulation instruction.

Reset signal generation clears this register to 00H.

Figure 8 - 73 Format of PWMOPA edge selection register (OPEDGE)

Address: F035BH After Reset: 00H R/W

Symbol	7	6	5	4	3	2	1	0
OPEDGE	—	—	—	—	—	—	EG1	EG0

EG1	EG0	Output forced cutoff release edge selection
0	0	Cutoff released at the rising edge of TRDIOC0
0	1	Cutoff released at the falling edge of TRDIOC0
1	0	Cutoff released at both edges of TRDIOC0
1	1	Input edge of TRDIOC0 disabled, cutoff retained

(5) PWMOPA status register (OPSR)

This register displays statuses of output forced cutoff and cutoff sources.

The OPSR register can be read by an 8-bit memory manipulation instruction.

Reset signal generation clears this register to 00H.

Figure 8 - 74 Format of PWMOPA status register (OPSR)

Address: F035CH After Reset: 00H R

Symbol	7	6	5	4	3	2	1	0
OPSR	0	0	0	0	0	HZOF1	HZOF0	HZIF0

HZOF1	Cutoff state[Note 1]
0	Normal timer output (TRDIOA1, TRDIOB1, TRDIOC1, TRDIOD1)
1	Cutoff state (TRDIOA1, TRDIOB1, TRDIOC1, TRDIOD1)

HZOF0	Cutoff state[Note 1]
0	Normal timer output (TRDIOA0, TRDIOB0, TRDIOC0, TRDIOD0)
1	Cutoff state (TRDIOA0, TRDIOB0, TRDIOC0, TRDIOD0)

HZIF0	Output cutoff source state[Notes 1, 2]
0	State in which output cutoff source has not exceeded threshold
1	State in which output cutoff source has exceeded threshold

Note 1. If the output cutoff source has exceeded the threshold before selecting the INTP0 and comparator 0 cutoff sources with the IN_SEL1 and IN_SEL0 bits in the OPCTL0 register, after the IN_SEL1 and IN_SEL0 bits are set, the HZIF0 bit is set to 1, but the HZOF0 and HZOF1 bits are not set.

Note 2. Effective when INTP0 and comparator 0 cutoff sources are selected.

8.8.3 Operation

Output forced cutoff and output forced cutoff release of the timer RD output pin TRDIOji (j = A, B, C, D; i = 0, 1) can be controlled by using the INTP0 input, event input from ELC, or comparator 0 output as a trigger. When INTP0 input or comparator 0 output is used as a cutoff source, the edge to trigger output forced cutoff or output forced cutoff release can be selected.

8.8.3.1 Forced cutoff

Pulse output from the timer RD output pin TRDIOji (j = A, B, C, D; i = 0, 1) can be cut off by using the INTP0 input, event input from ELC, or comparator 0 output as a trigger.
When an output forced cutoff source is detected, the output of timer RD is forcibly cut off, and the output value specified in the OPDF0/OPDF1 register is output. For detailed operation, see Figure 8 - 76.
Forced cutoff release can be selected from hardware and software by using the setting value of the HS_SEL bit of the OPCTL0 register.

8.8.3.2 Hardware release (HS_SEL = 0)

The timing of output forced cutoff release varies depending on the function of timer RD.

(1) Output other than the timer RD complementary PWM function
- Timer RD is in the output compare function, PWM function, or PWM3 mode:
  Output forced cutoff of TRDIOA0, TRDIOB0, TRDIOC0, and TRDIOD0 is released when the TRD0 count value becomes 0000H after an output forced cutoff release source is detected.
  Output forced cutoff of TRDIOA1, TRDIOB1, TRDIOC1, and TRDIOD1 is released when the TRD1 count value becomes 0000H.
- Timer RD is in the reset synchronous PWM mode:
  Forced cutoff of all TRDIO pins is released when the TRD0 count value becomes 0000H after an output forced cutoff release source is detected.

Figure 8 - 75 Operation example of output forced cutoff or output forced cutoff release by hardware (an example of cutoff of TRDIOB0, TRDIOC0, and TRDIOD0 pins)

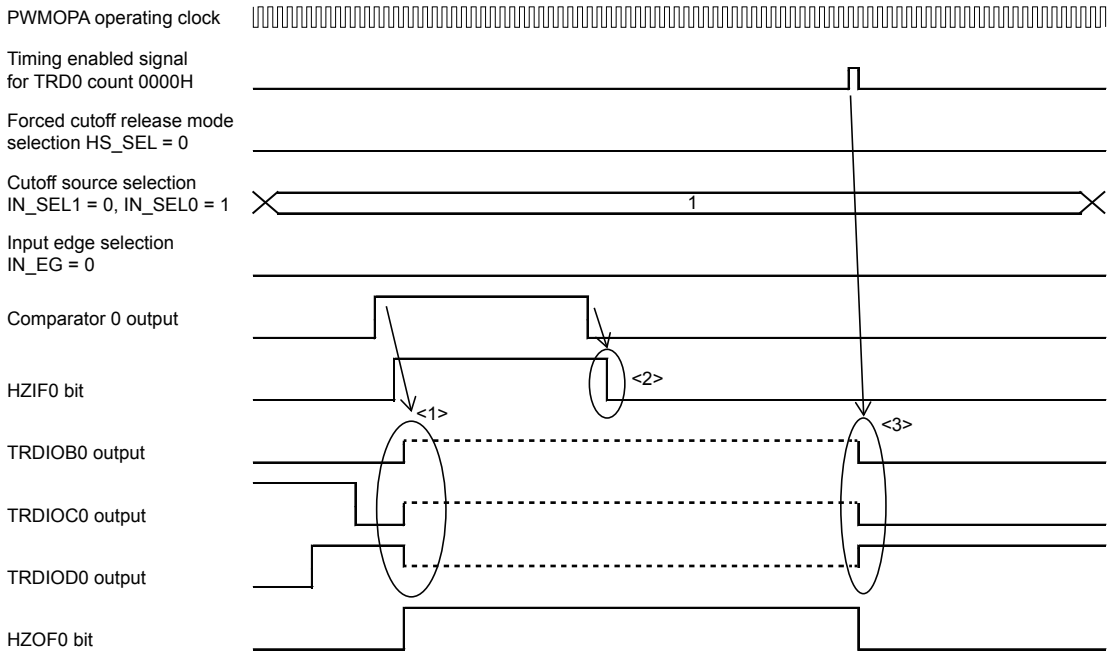

<1> The TRDIOB0, TRDIOC0, and TRDIOD0 pin outputs enter the output forced cutoff state when the rising edge of the comparator 0 output signal is detected.

<2> The HZIF0 bit is cleared after the falling edge of the comparator 0 output signal is detected.

<3> The forced cutoff state is released when the TRDi count value becomes 0000H.

Figure 8 - 76 Cutoff detailed timing diagram

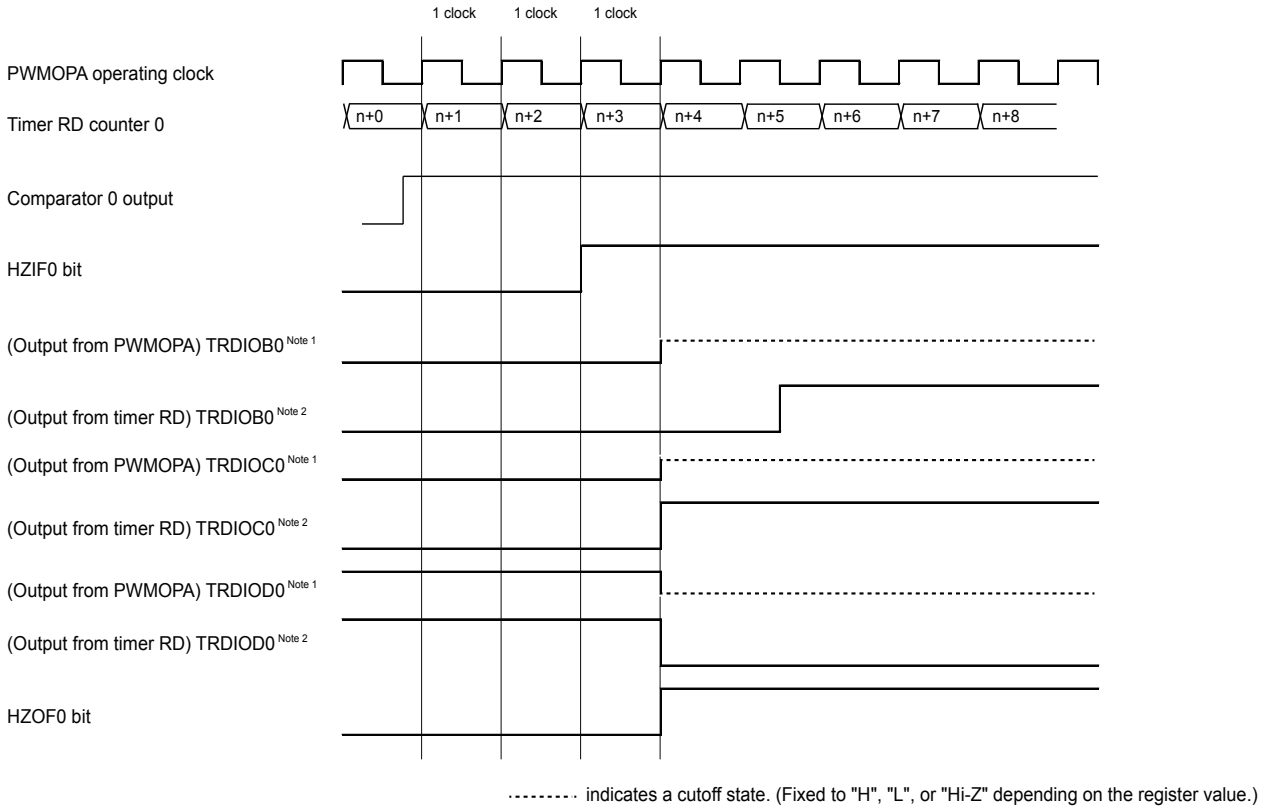

Note 1. (Output from PWMOPA) TRDIO* (* = B to D) indicates the state of the multiplexed timer RD function pin.

Note 2. (Output from Timer RD) TRDIO* (* = B to D) indicates input to PWMOPA from the timer RD.

Figure 8 - 77 Cutoff release detailed timing diagram (timer RD count source = f_{CLK})

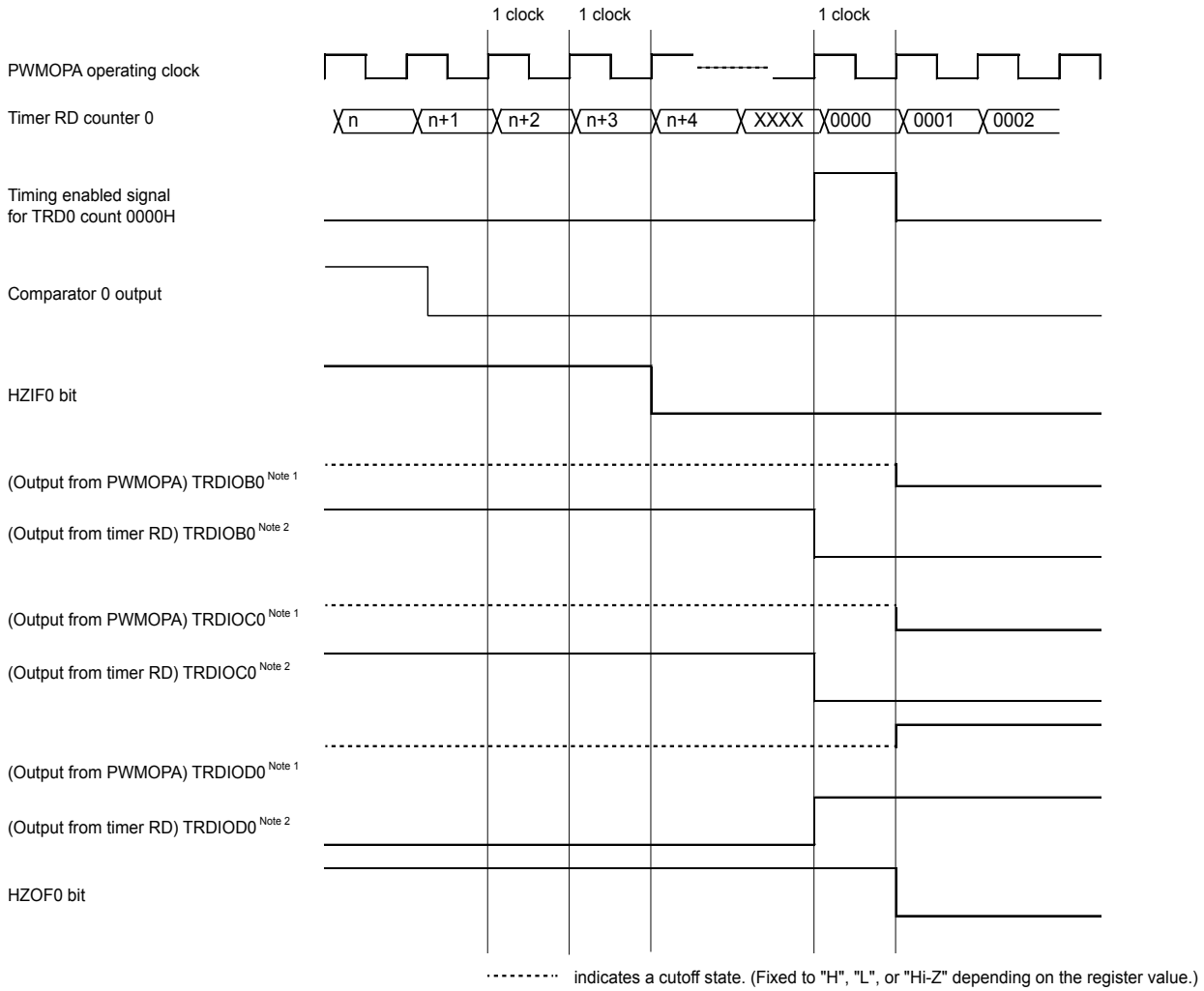

Note 1. (Output from PWMOPA) TRDIO* (* = B to D) indicates the state of the multiplexed timer RD function pin.

Note 2. (Output from Timer RD) TRDIO* (* = B to D) indicates input to PWMOPA from the timer RD.

Figure 8 - 78 Cutoff release detailed timing diagram (timer RD count source = $f_{CLK}/2$)

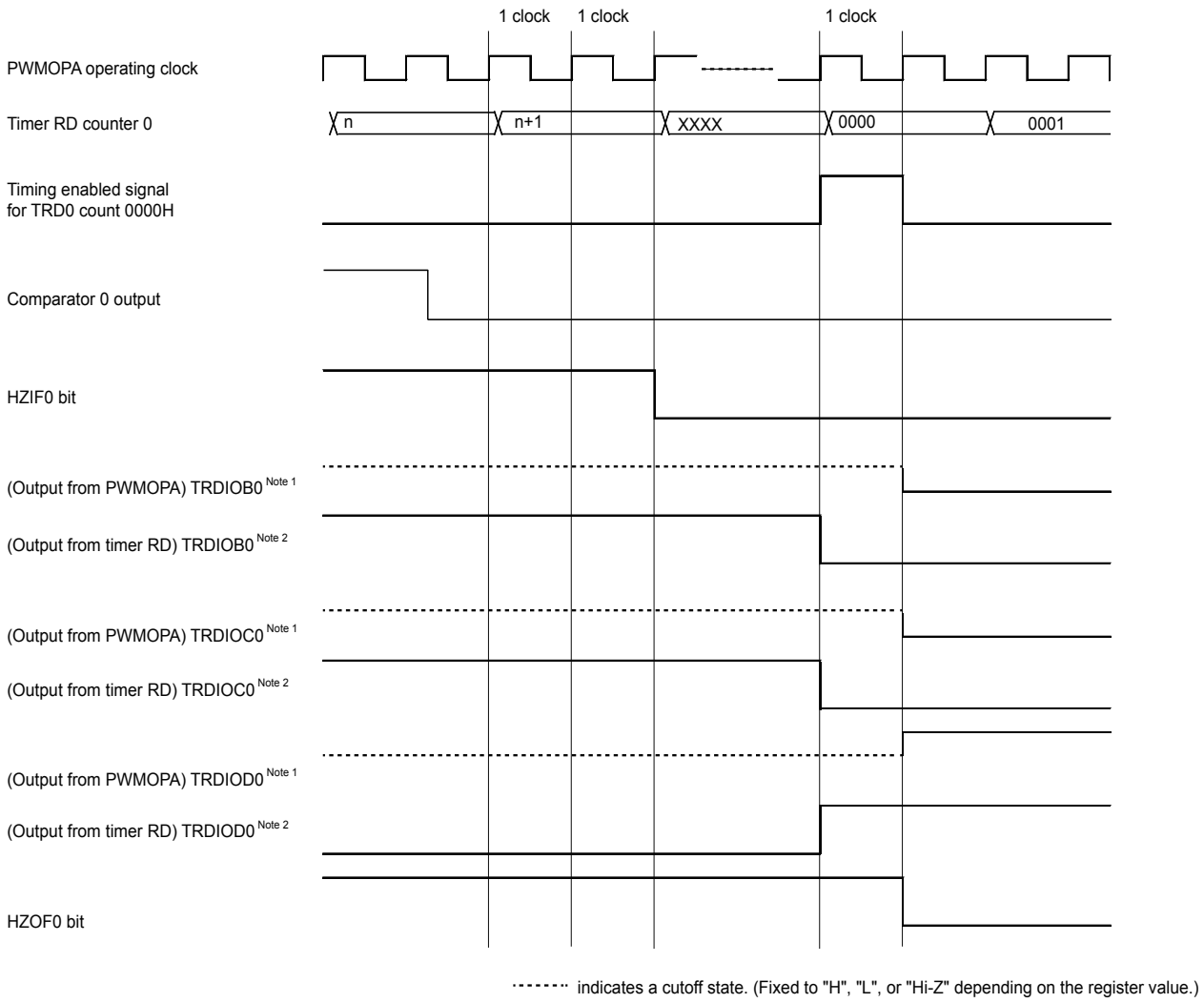

Note 1. (Output from PWMOPA) TRDIO* (* = B to D) indicates the state of the multiplexed timer RD function pin.

Note 2. (Output from Timer RD) TRDIO* (* = B to D) indicates input to PWMOPA from the timer RD.

(2) Output of the timer RD complementary PWM function

If the OPEDGE register is set after an output forced cutoff release source is detected, the output forced cutoff state of timer RD is released at the rising, falling, and both edges of the selected TRDIOC0.

Figure 8 - 79 Operation example of hardware cutoff release function (an example of TRDIOB0 and TRDIOD0)

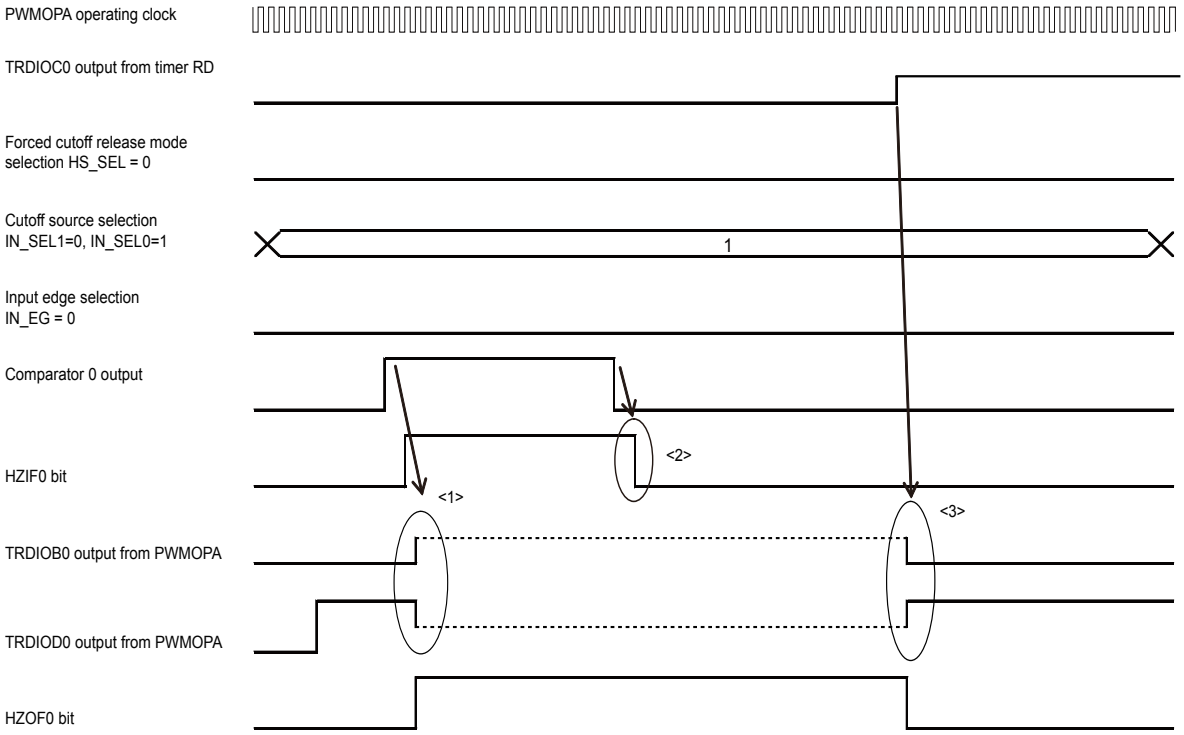

<1> The TRDIOB0 and TRDIOD0 pin outputs enter the forced cutoff state when the rising edge of the comparator 0 output signal is detected.

<2> The HZIF0 bit is cleared after the falling edge of the comparator 0 output signal is detected.

<3> The forced cutoff state is released at the rising edge of TRDIOC0.

For the cutoff detailed timing diagram, see Figure 8 - 76.

Figure 8 - 80 Cutoff release detailed timing diagram
(timer RD count source = f_{CLK}, timer RD decremented)

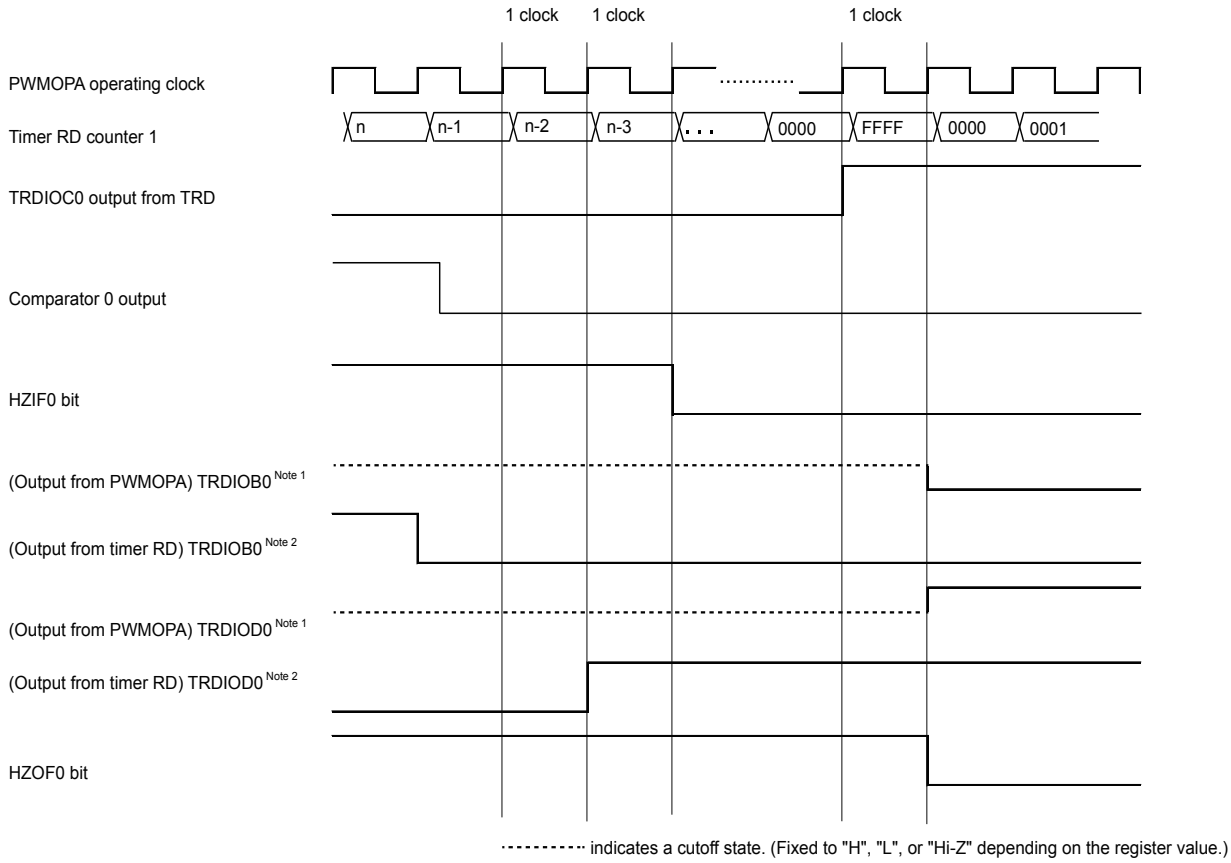

Note 1. (Output from PWMOPA) TRDIO* (* = B to D) indicates the state of the multiplexed timer RD function pin.
Note 2. (Output from Timer RD) TRDIO* (* = B to D) indicates input to PWMOPA from the timer RD.

Figure 8 - 81 Cutoff release detailed timing diagram
(timer RD count source = f_{CLK}, timer RD count = TRDGRA0)

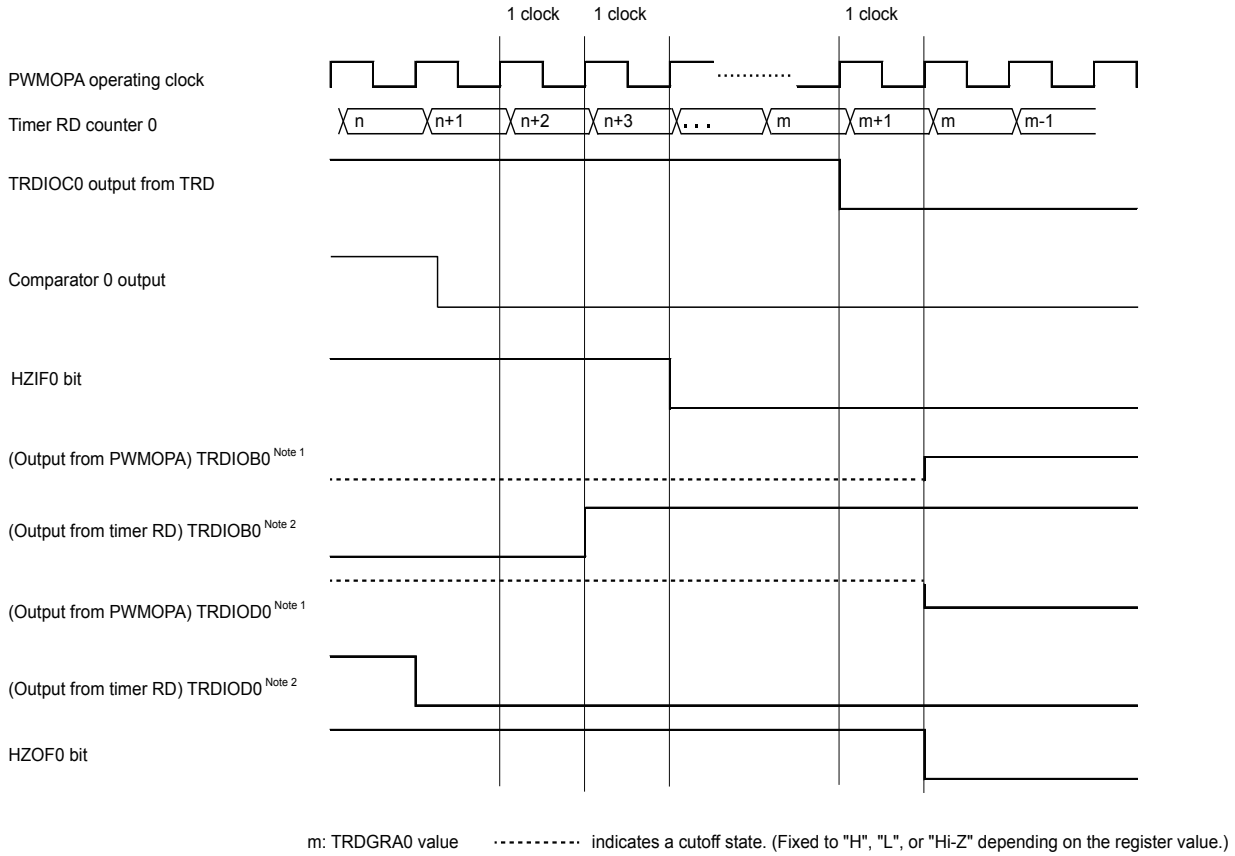

Note 1. (Output from PWMOPA) TRDIO* (* = B to D) indicates the state of the multiplexed timer RD function pin.
Note 2. (Output from Timer RD) TRDIO* (* = B to D) indicates input to PWMOPA from the timer RD.

Figure 8 - 82 Cutoff release detailed timing diagram
(timer RD count source = f_{CLK}/2, timer RD decremented)

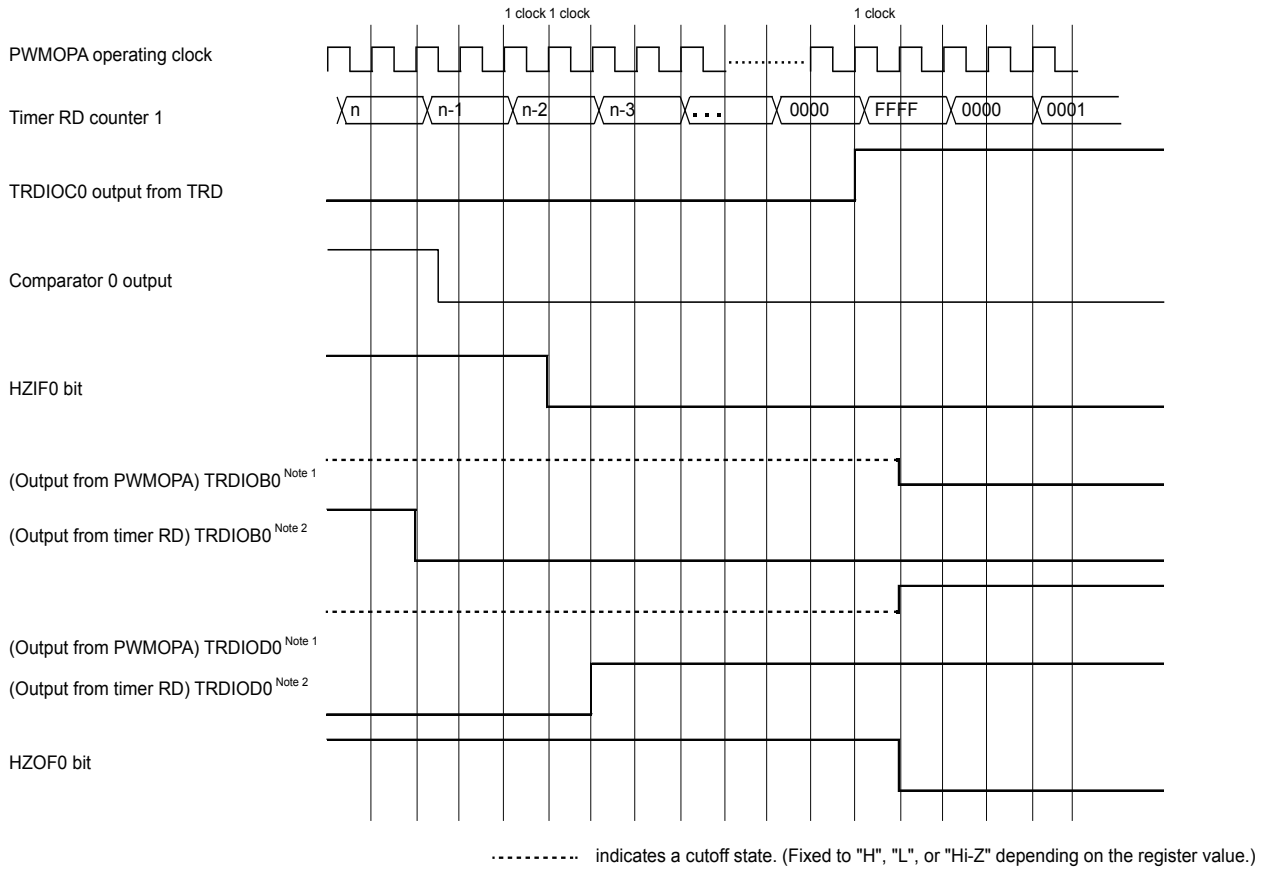

Note 1. (Output from PWMOPA) TRDIO* (* = B to D) indicates the state of the multiplexed timer RD function pin.
Note 2. (Output from Timer RD) TRDIO* (* = B to D) indicates input to PWMOPA from the timer RD.

Figure 8 - 83 Cutoff release detailed timing diagram
(timer RD count source = f_{CLK}/2, timer RD count = TRDGRA0)

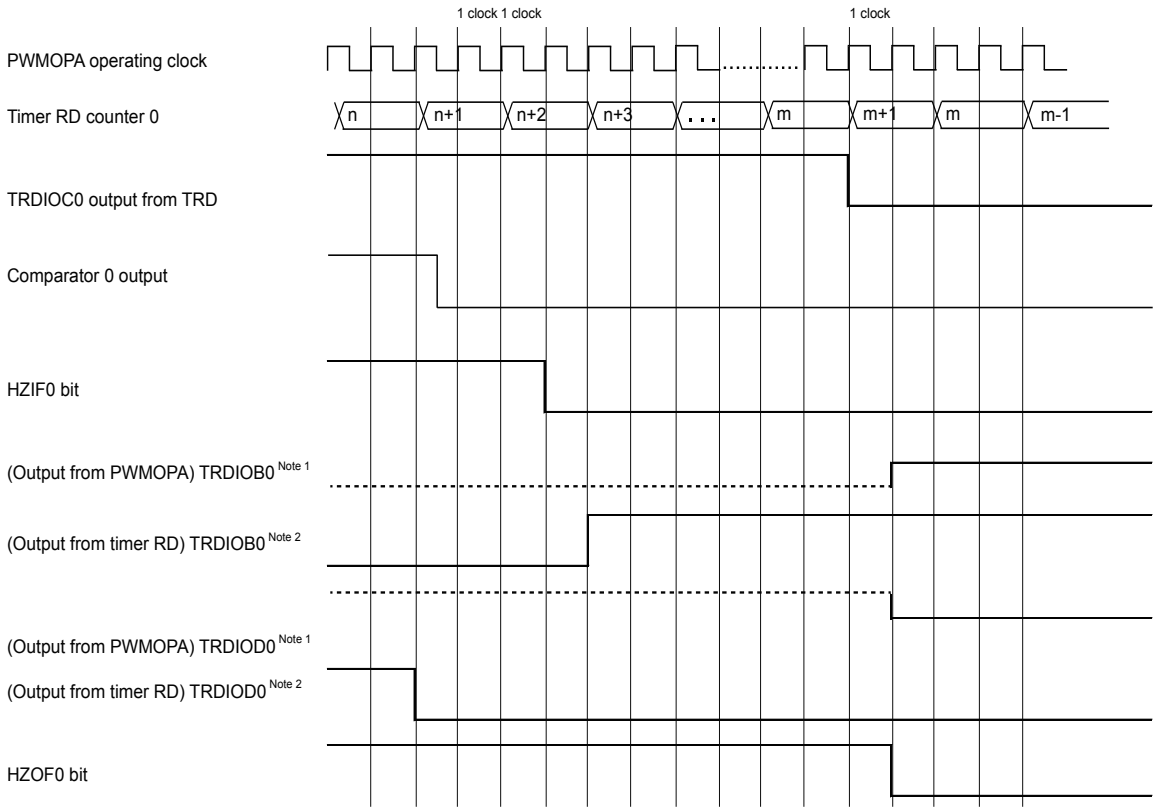

m: TRDGRA0 value ····· indicates a cutoff state. (Fixed to "H", "L", or "Hi-Z" depending on the register value.)

Note 1. (Output from PWMOPA) TRDIO* (* = B to D) indicates the state of the multiplexed timer RD function pin.
Note 2. (Output from Timer RD) TRDIO* (* = B to D) indicates input to PWMOPA from the timer RD.

8.8.3.3 Software cutoff release (HS_SEL = 1)

The timing of output forced cutoff release varies depending on the setting of the ACT bit of the OPCTL0 register.

(1) Immediate release via software (ACT = 0)
If ACT is set to 0, forced cutoff is released immediately when the HZ_REL bit of the OPCTL0 register is set to 1.
After forced cutoff is released, the HZ_REL bit automatically becomes 0.

Figure 8 - 84 Operation example of cutoff release by software (an example of TRDIOB0, TRDIOC0, and TRDIOD0)

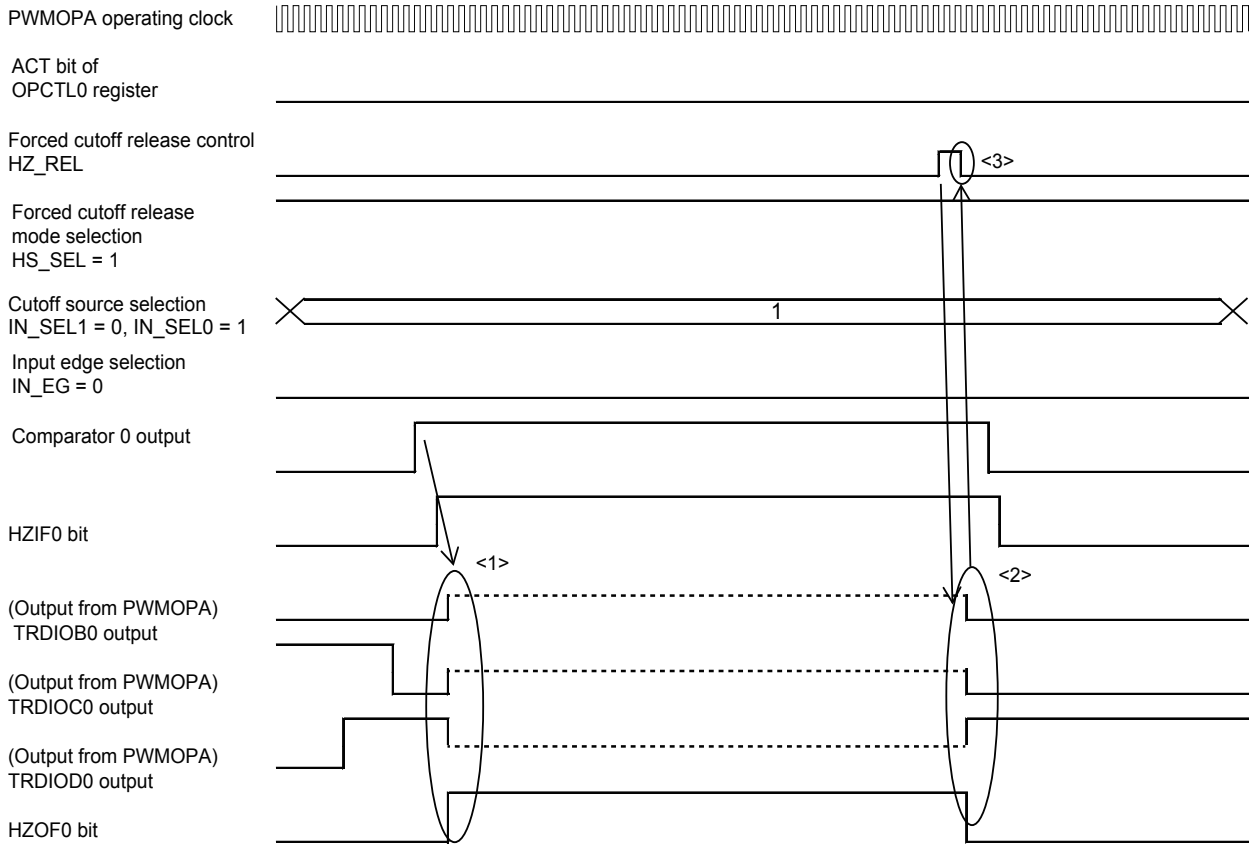

<1> The TRDIOB0, TRDIOC0, and TRDIOD0 pin outputs enter the cutoff state when the rising edge of the comparator 0 output signal is detected.
<2> The HZ_REL bit is set to 1 to release forced cutoff immediately.
<3> After forced cutoff is released, the HZ_REL bit becomes 0.

For the cutoff detailed timing diagram, see Figure 8 - 76.

Figure 8 - 85 Cutoff release detailed timing diagram

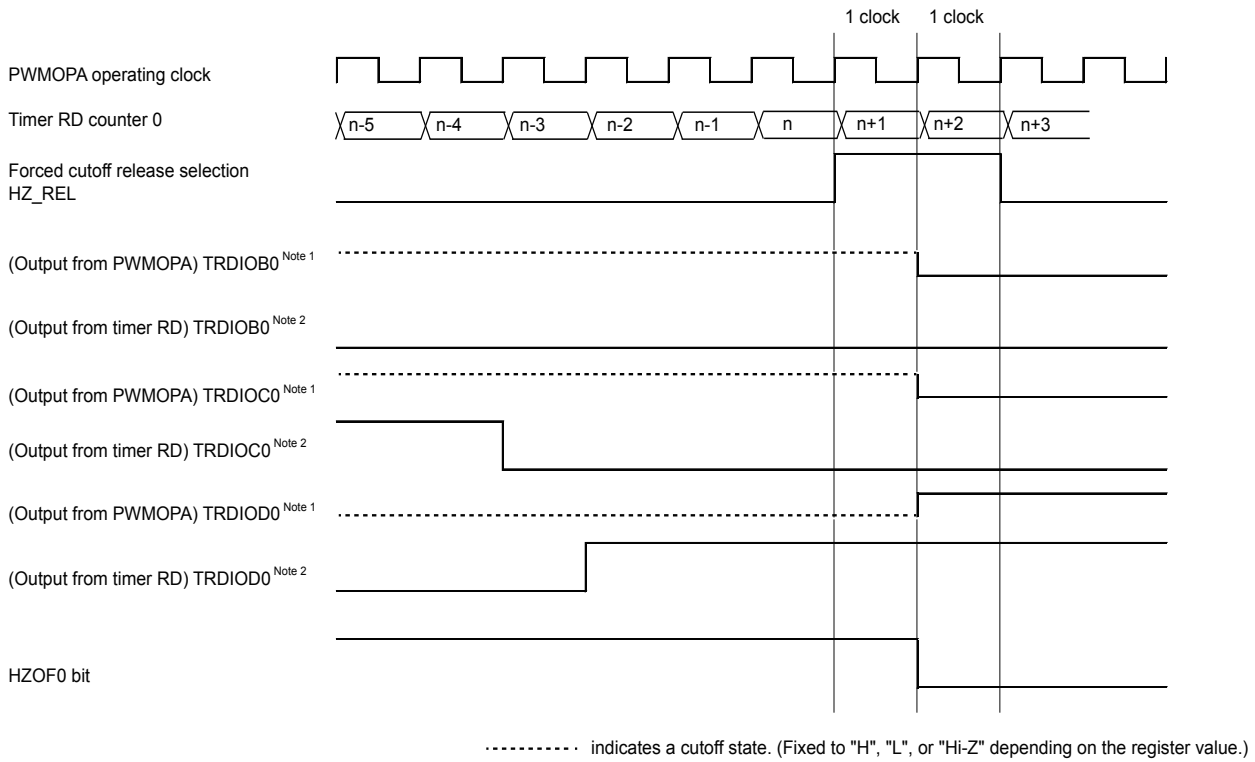

(2) Software conditional release (ACT = 1)

If ACT is set to 1, forced cutoff can be released via the signal from timer RD after the HZ_REL bit of the OPCTL0 register is set to 1. After forced cutoff is released, the HZ_REL bit automatically becomes 0.

Hardware release resumes output using the release signal from timer RD as a trigger after an output forced cutoff release source is detected. Software release resumes output using the release signal from timer RD as a trigger after the HZ_REL bit is set to 1. The release timing is the same.

(a) Timer RD is in the output compare function, PWM function, or PWM3 mode:

After the HZ_REL bit is set to 1, output forced cutoff of TRDIOA0, TRDIOB0, TRDIOC0, and TRDIOD0 is released when the TRD0 count value becomes 0000H. Output forced cutoff of TRDIOA1, TRDIOB1, TRDIOC1, and TRDIOD1 is released when the TRD1 count value becomes 0000H.

Figure 8 - 86 Operation example of cutoff release by software (timer RD, 2-channel count)

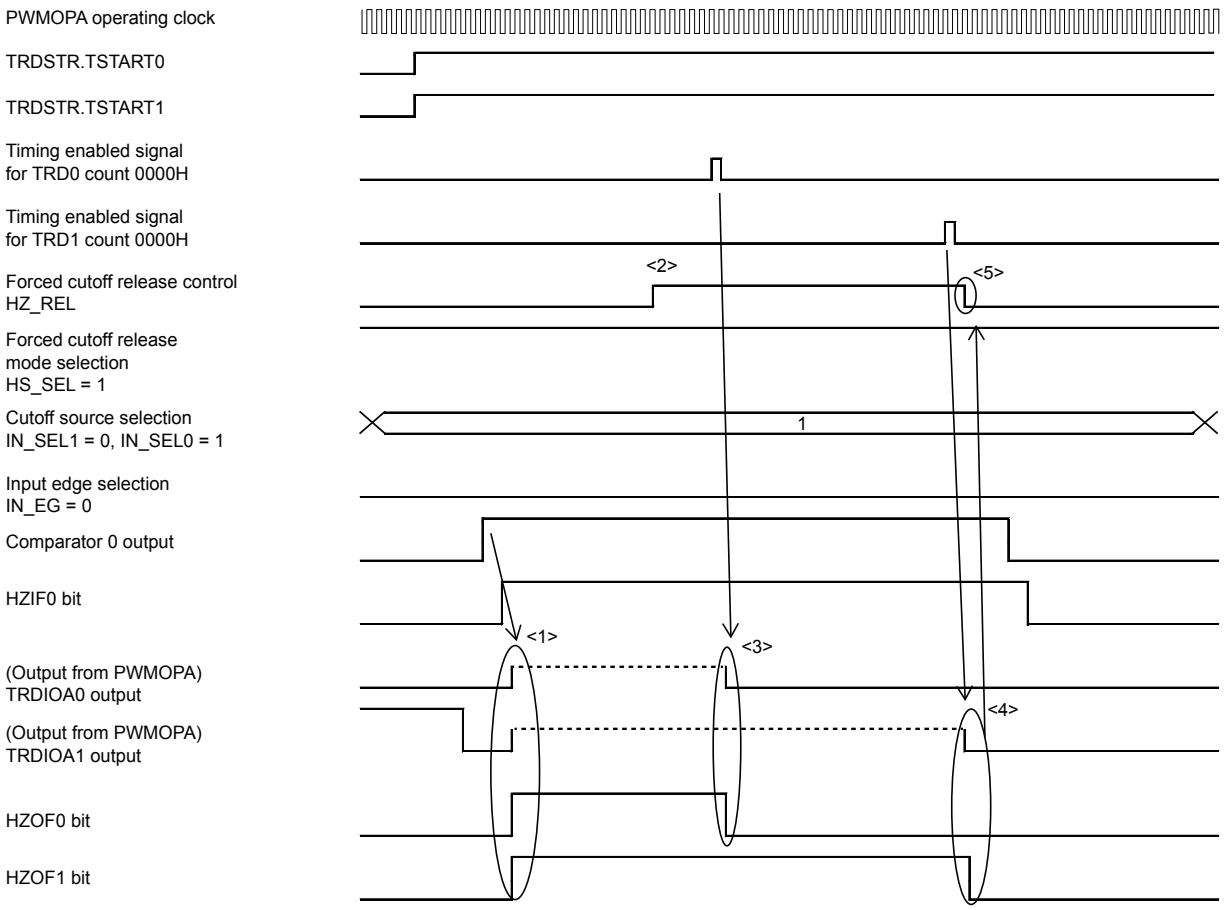

<1> The TRDIOA0 and TRDIOA1 pin outputs enter the cutoff state when the rising edge of the comparator 0 output signal is detected.

<2> After the HZ_REL bit is set to 1, it waits until each of the counter values becomes 0000H.

<3> The TRDIOA0 forced cutoff state is released when the TRD0 count value becomes 0000H.

<4> The TRDIOA1 forced cutoff state is released when the TRD1 count value becomes 0000H.

<5> After forced cutoff of each channel is released, the HZ_REL bit becomes 0 automatically.

Figure 8 - 87 Operation example of cutoff release by software (timer RD, 1-channel count)

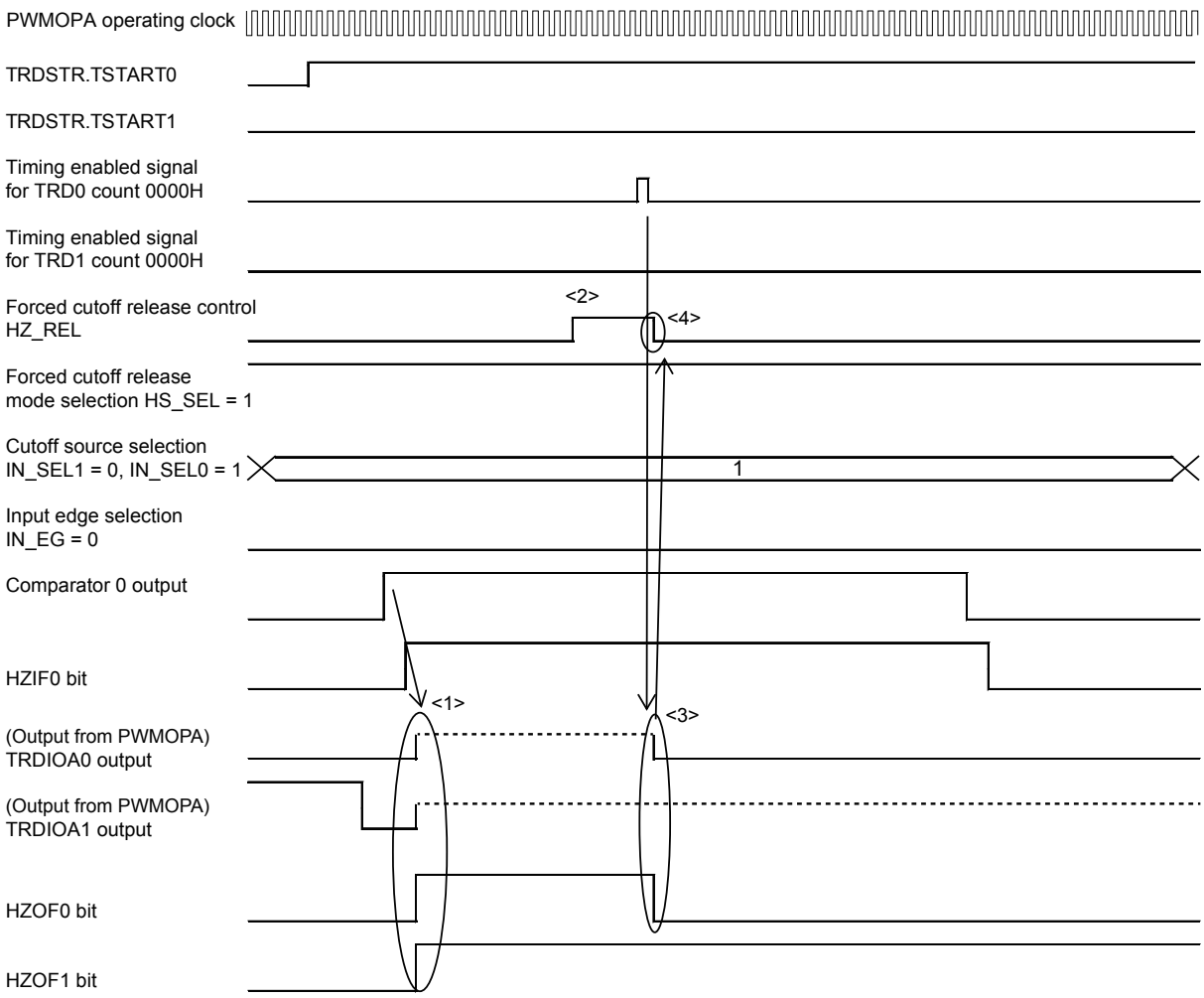

<1> The TRDIOA0 and TRDIOA1 pin outputs enter the cutoff state when the rising edge of the comparator 0 output signal is detected.

<2> After the HZ_REL bit is set to 1, it waits until the counter value becomes 0000H.

<3> The TRDIOA0 forced cutoff state is released when the TRD0 count value becomes 0000H.

<4> After forced cutoff is released, the HZ_REL bit becomes 0 automatically.

For the cutoff detailed timing, see Figure 8 - 76.
For the cutoff release detailed timing, see Figure 8 - 77 and Figure 8 - 78.
For the timing when HZ_REL bit becomes 0 automatically, see Figure 8 - 85.

(b) Timer RD is in the reset synchronous PWM mode:
Output forced cutoff of all TRDIO pins is released when the TRD0 count value becomes 0000H after the HZ_REL bit is set to 1.

Figure 8 - 88 Operation example of output cutoff release by software

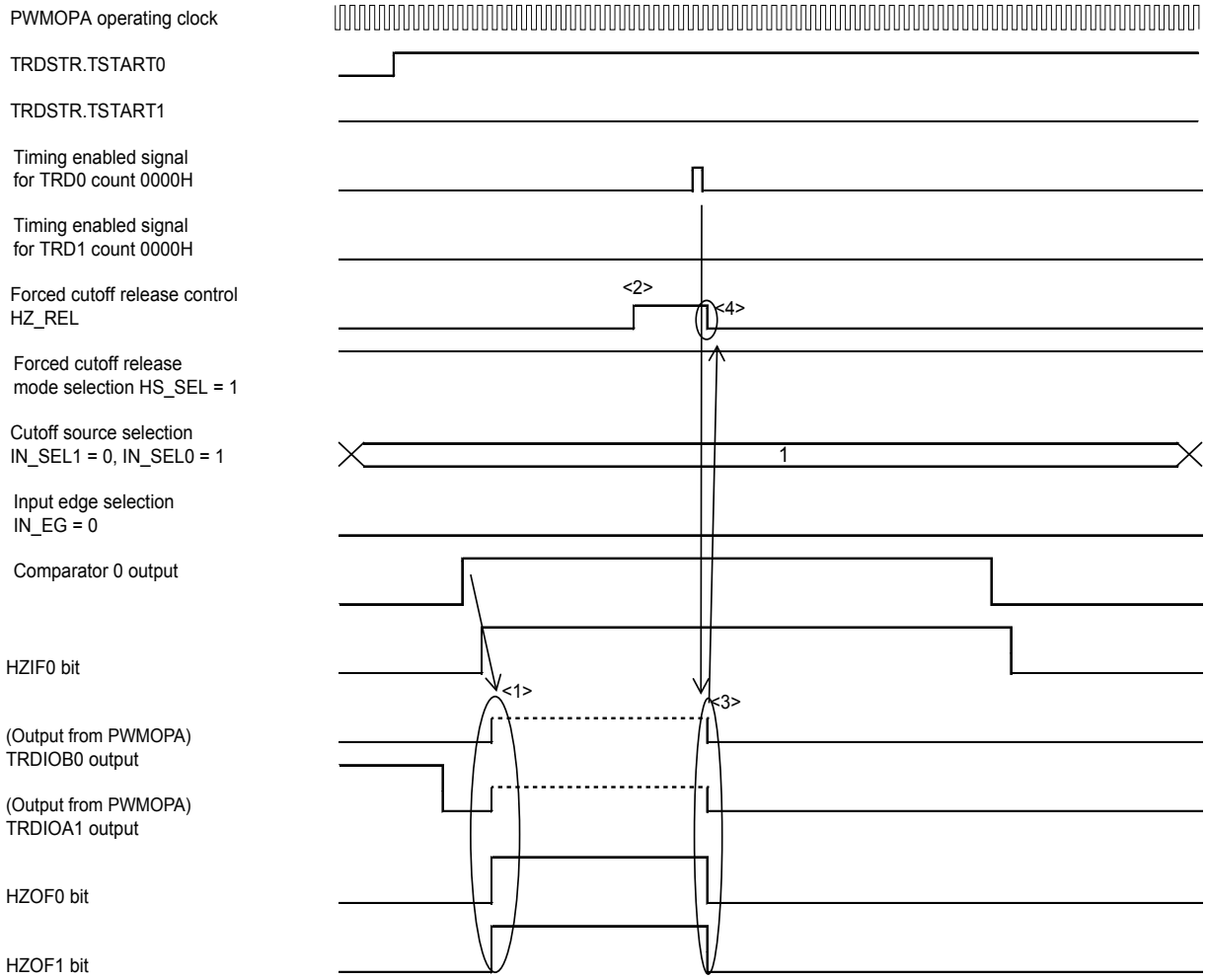

<1> The TRDIOB0 and TRDIOA1 pin outputs enter the cutoff state when the rising edge of the comparator 0 output signal is detected.

<2> After the HZ_REL bit is set to 1, it waits until the counter value of channel 0 of timer RD becomes 0000H.

<3> The TRDIOB0 and TRDIOA1 forced cutoff states are released when the TRD0 count value becomes 0000H (Timer RD channel 1 operation is not affected).

<4> After forced cutoff is released, the HZ_REL bit becomes 0 automatically.

For the cutoff detailed timing, see Figure 8 - 76.
For the cutoff release detailed timing, see Figure 8 - 77 and Figure 8 - 78.
For the timing when HZ_REL bit becomes 0 automatically, see Figure 8 - 85.

(c) Timer RD is in the complementary PWM mode:
If the OPEDGE register is set after the HZ_REL bit is set to 1, the output forced cutoff state of timer RD is released at both edges, rising edge, or falling edge of the TRDIOC0 selected.

Figure 8 - 89 Operation example of cutoff release by software (an example of TRDIOB0 and TRDIOD0)

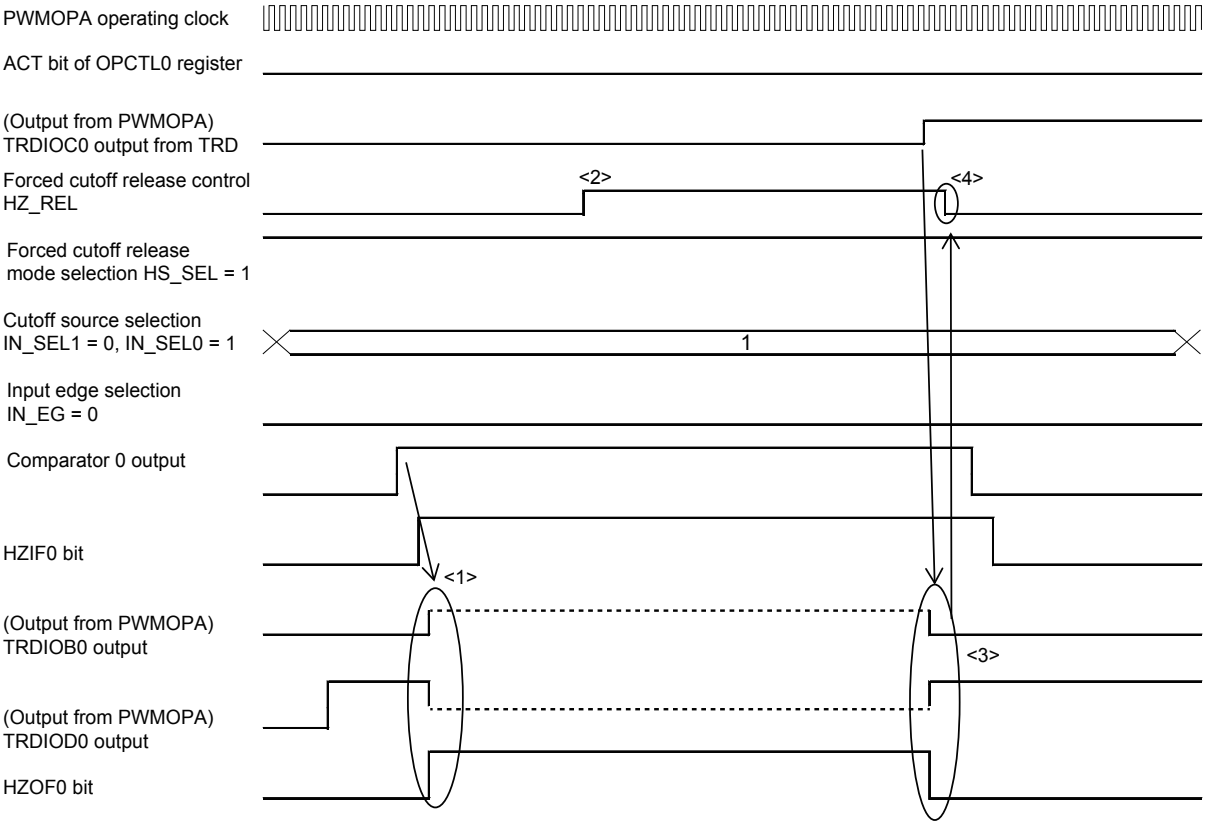

<1> The TRDIOB0 and TRDIOD0 pin outputs enter the cutoff state when the rising edge of the comparator 0 output signal is detected.
<2> After the HZ_REL bit is set to 1, it waits for the TRDIOC0 rising signal.
<3> When the rising edge of TRDIOC0 is detected, the forced cutoff state is released.
<4> When forced cutoff is released, the HZ_REL bit becomes 0 automatically.

For the cutoff detailed timing, see Figure 8 - 76.
For the cutoff release detailed timing, see Figure 8 - 80, Figure 8 - 81, Figure 8 - 82, and Figure 8 - 83.
For the timing when HZ_REL bit becomes 0 automatically, see Figure 8 - 85.

8.8.3.4 Hazard measures

A hazard may occur if switching between the TRDIO pin and port is performed when a cutoff state occurs, cutoff release occurs, or while timer RD is operating. Hazard risks can be handled by setting the hazard control selection bit (HAZAD_SET) to 1. However, for the timer RD output when hazard control is enabled, a delay of one clock occurs from the timer RD output when it is disabled.

Figure 8 - 90 Hazard control timing diagram

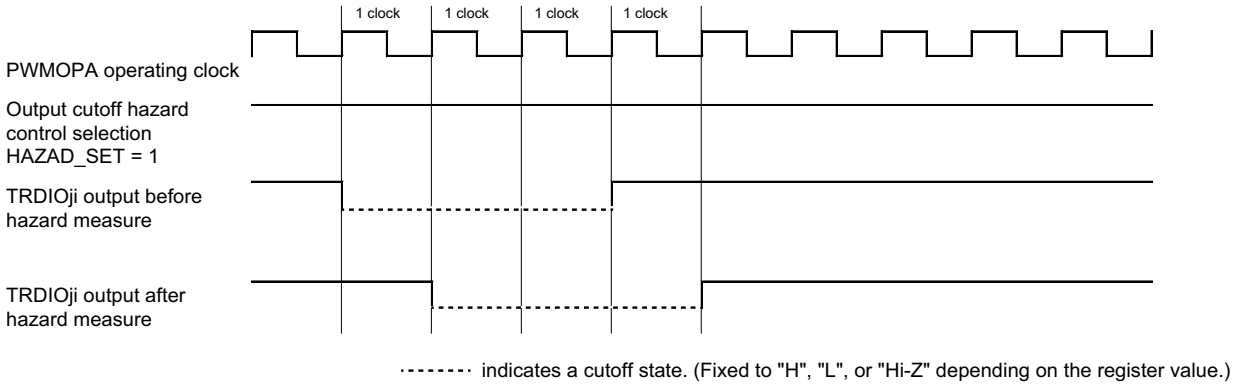

Remark j = A, B, C, D; i = 0, 1

8.8.3.5 Output cutoff source detected state and output cutoff source undetected state

Whether it is the output cutoff source detected state (HZIF0 = 1) or output cutoff source undetected state (HZIF0 = 0) is determined based on the level of the signals (INTP0, comparator 0 output) selected with the cutoff source selection bits (OPCTL0.IN_SEL1, OPCTL0.IN_SEL0).
If the output cutoff/output cutoff release edge bit (OPCTL0.IN_EG) is set to 0, the high-level becomes the output cutoff source detected state, and the low-level becomes the output cutoff source undetected state.
If the output cutoff/output cutoff release edge bit (OPCTL0.IN_EG) is set to 1, the low-level becomes the output cutoff source detected state, and the high-level becomes the output cutoff source undetected state.

Remark If the output cutoff source has exceeded the threshold before selecting the INTP0 and comparator 0 cutoff sources with the IN_SEL1 and IN_SEL0 bits in the OPCTL0 register, after the IN_SEL1 and IN_SEL0 bits are set, the HZIF0 bit is set to 1, but the HZOF0 and HZOF1 bits are not set.

8.8.3.6 Timing when timer RD counter value becomes 0000H

When releasing output forced cutoff via hardware, the output cutoff conditions vary depending on the operating mode of timer RD.

(1) Timing when the count value becomes 0000H if timer RD is in the output compare function mode
- Count value = 0000H and timer RD starts counting.
  Output cutoff is not released.
- Timer RD is counting and 0000H is written to the counter with software.
  Output cutoff is released.
- The counter overflows and becomes 0000H.
  Output cutoff is released.
- The counter becomes 0000H at compare match with the TRDGRA0 register.
  Output cutoff is released.

(2) Timing when the count value becomes 0000H if timer RD is in the PWM function mode
- Count value = 0000H and timer RD starts counting.
  Output cutoff is not released.
- Timer RD is counting and 0000H is written to the counter with software.
  Output cutoff is released.
- The counter becomes 0000H at compare match with the TRDGRA0 register.
  Output cutoff is released.

(3) Timing when the count value becomes 0000H if timer RD is in the reset synchronous PWM mode
- Count value = 0000H and timer RD starts counting.
  Output cutoff is not released.
- Timer RD is counting and 0000H is written to the counter with software.
  Output cutoff is released.
- The counter becomes 0000H at compare match with the TRDGRA0 register.
  Output cutoff is released.

(4) Timing when the count value becomes 0000H if timer RD is in the PWM3 mode

- Count value = 0000H and timer RD starts counting.
  Output cutoff is not released.
- Timer RD is counting and 0000H is written to the counter with software.
  Output cutoff is released.
- The counter becomes 0000H at compare match with the TRDGRA0 register.
  Output cutoff is released.

Figure 8 - 91 Judgment timing for count value = 0000H (timer RD count starts when count value = 0000H)

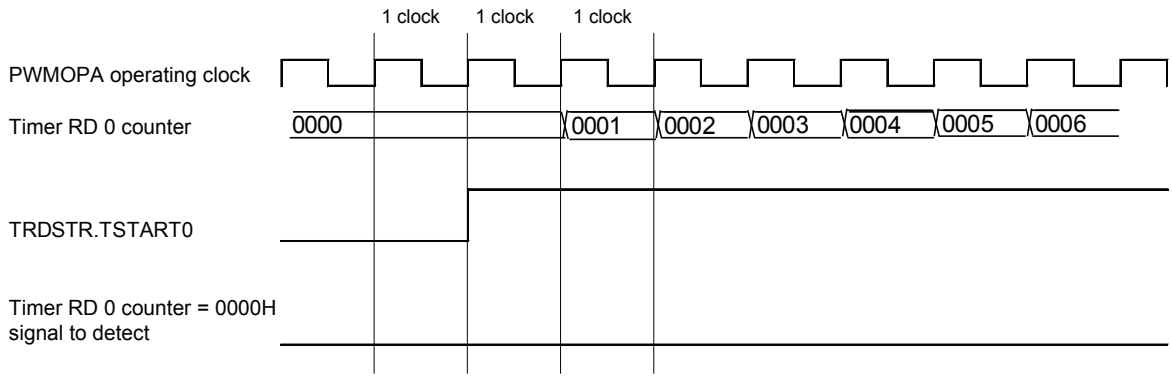

- Judgment for count value = 0000H is not performed

Figure 8 - 92 Judgment timing for count value = 0000H
(count value becomes 0000H while counting with count source = operating clock)

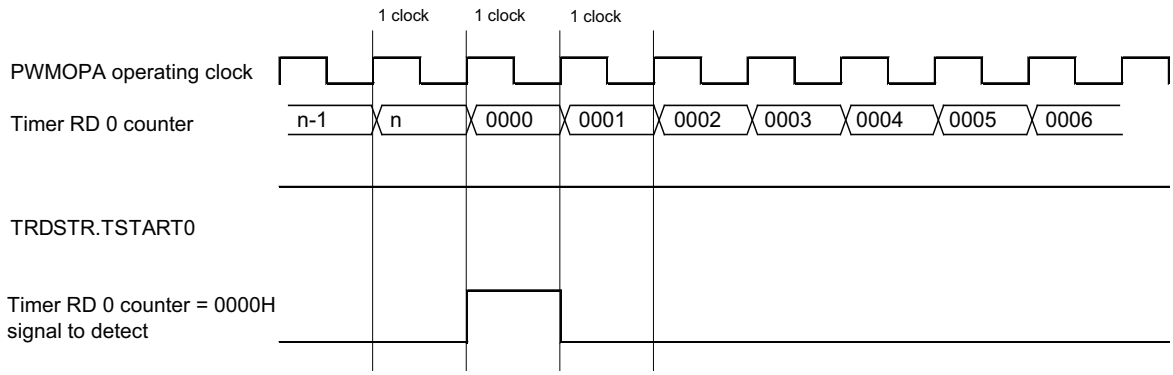

- Judgment for count value = 0000H is performed

Figure 8 - 93 Judgment timing for count value = 0000H
(count value becomes 0000H while counting with count source = operating clock/2)

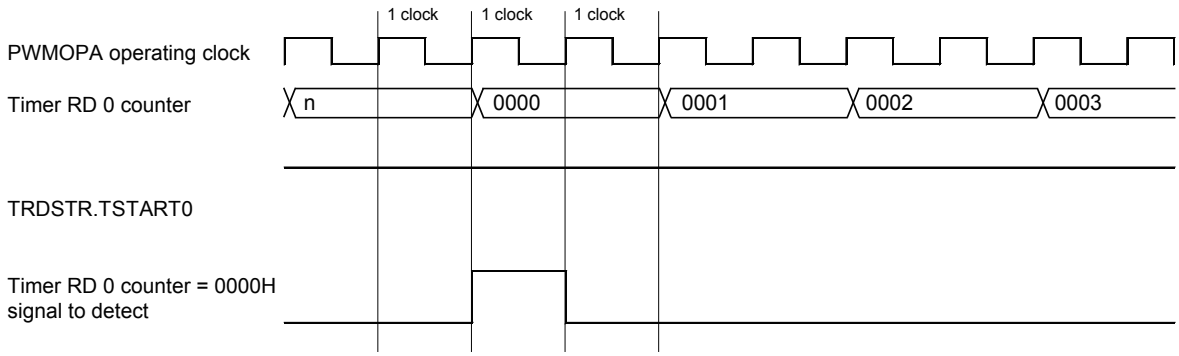

- Judgment for count value = 0000H is performed

(5) When timer RD count value = 0000H and timer RD is stopped
- If timer RD stops simultaneously when the timer RD count value becomes 0000H, it is not cutoff release timing.

Figure 8 - 94 Judgment timing for count value = 0000H
(count source = operating clock, count stops simultaneously when timer RD counter value becomes 0000H)

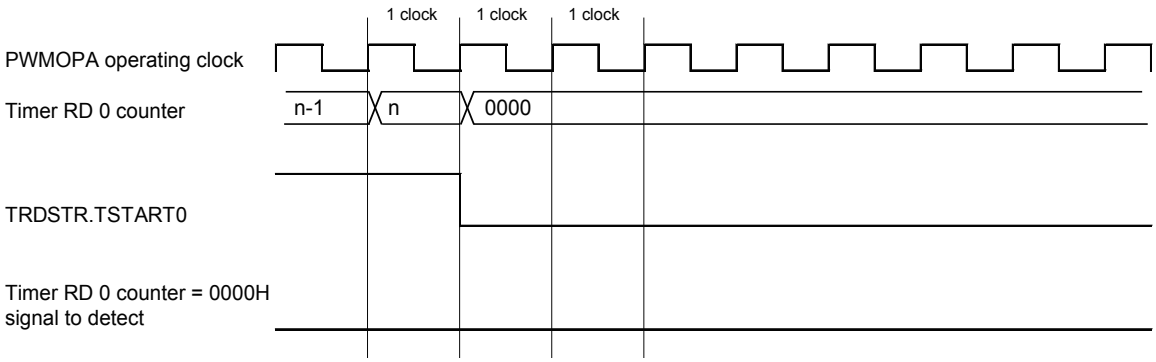

- Judgment for count value = 0000H is not performed

Figure 8 - 95 Judgment timing for count value = 0000H
(count source = f_{CLK}/2, count stops simultaneously when timer RD counter value becomes 0000H)

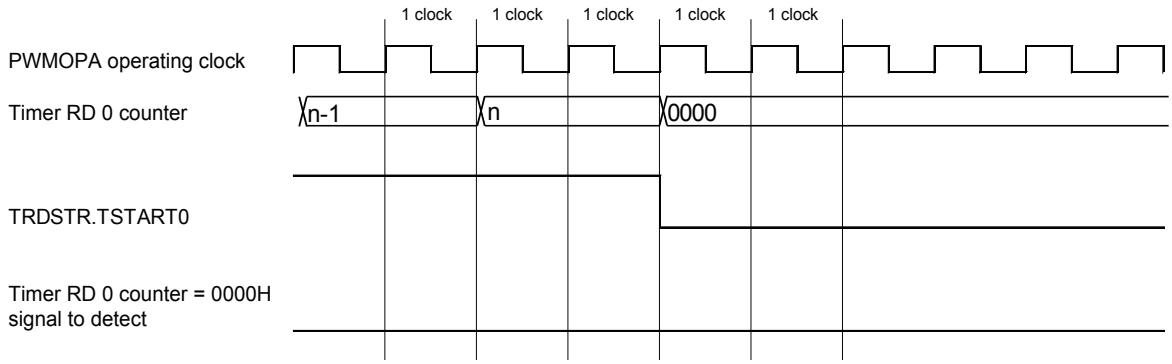

- Judgment for count value = 0000H is not performed

If timer RD stops at the next one cycle after the timer RD count value becomes 0000H, forced cutoff is released.

Figure 8 - 96 Judgment timing for count value = 0000H
(count source = operating clock/2, count stops at the next timing after timer RD counter value becomes 0000H)

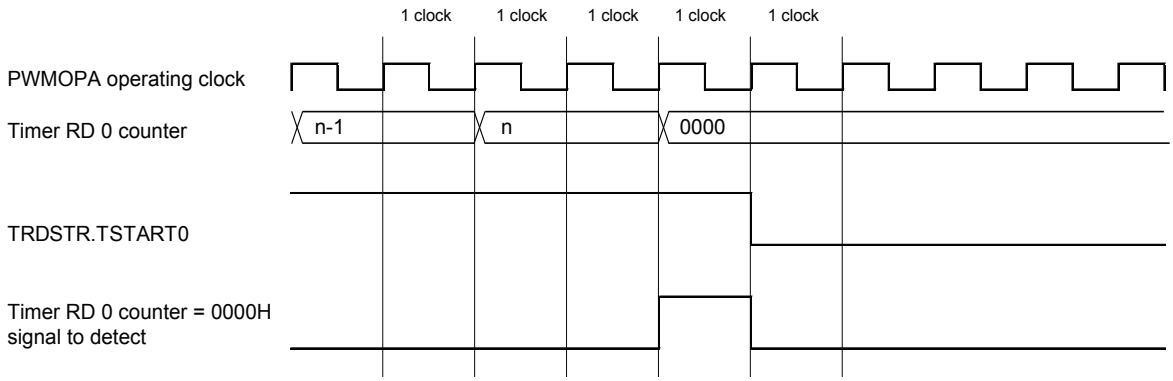

- Judgment for count value = 0000H is performed

8.8.3.7 Setting procedure

PWMOPA can operate in coordination with timer RD. The setting code should be added to the steps for setting up timer RD. The procedure is as follows:

After setting the clock and mode of timer RD:

1) Set the PWMOPEN bit of the PER1 register to 1.
2) Set the OPCTL0 register.
3) Set the OPEDGE register.
4) Set the OPDF0 and OPDF1 registers.
   Timer RD starts operation.
5) Set the HZOF0 and HZOF1 bits of the OPSR register and wait for the cutoff state.
6) Release the cutoff state using the OPCTL0 register (software or hardware release can be selected with the HS_SEL bit).

Remark 1. PWMOPA is a control module built by adding comparator 0 output, external interrupt 0 (INTP0), and event link controller (ELC) as triggers to the timer RD cutoff function. Accordingly, operation of PWMOPA must always be performed together with timer RD.

Remark 2. To operate the timer RD function independently, do not set correlated registers of PWMOPA.

8.8.4 Cautions

(1) The following table lists the priorities when pulse output forced cutoff of timer RD operates simultaneously with output cutoff of PWMOPA.

Table 8 - 22 Forced cutoff priorities

		Pin state control at output forced cutoff of PWMOPA			
		Prohibited	Hi-Z	Low-level	High-level
Pin state control at output forced cutoff of timer RD	Prohibited	Prohibited	Hi-Z	Low-level	High-level
	Hi-Z	Hi-Z	Hi-Z	Low-level	High-level
	Low-level	Low-level	Hi-Z	Low-level	High-level
	High-level	High-level	Hi-Z	Low-level	High-level

(2) If timer RD enters the pulse output forced cutoff state when PWMOPA is in the output cutoff state in the complementary PWM mode, an output cutoff release edge may be entered to PWMOPA depending on the state of TRDIOC0.

(3) When output cutoff is triggered with an event link controller source, make sure to select software release (set the HS_SEL bit to 1) to release output cutoff.

(4) When output cutoff hazard control is selected, the timer RD output via PWMOPA is delayed for one cycle of PWMOPA operating clock.

(5) If the timer RD output pin via PWMOPA is set to timer RD output when output cutoff hazard control is selected (HAZAD_SET bit is set to 1), switching between timer RD output and port output is possible while timer RD is counting.

(6) If the timer RD output pin via PWMOPA is set to port operation, a hazard may occur upon output cutoff or cutoff release.

(7) Set the input enabled level period of comparator 0 and INTP0 to one cycle of PWMOPA operating clock or longer.

CHAPTER 9 TIMER RG

9.1 Functions of Timer RG

Timer RG supports the following three modes:

- Timer mode:
  - Input capture function: Count at the rising edge, falling edge, or both rising/falling edges
  - Output compare function: Low output/high output/toggle output
- PWM mode: PWM output available with any duty cycle
- Phase counting mode: Automatic measurement available for the counts of the two-phase encoder

9.2 Configuration of Timer RG

Figure 9 - 1 shows the Timer RG Block Diagram and Table 9 - 1 lists the Timer RG Pin Configuration.

Figure 9 - 1 Timer RG Block Diagram

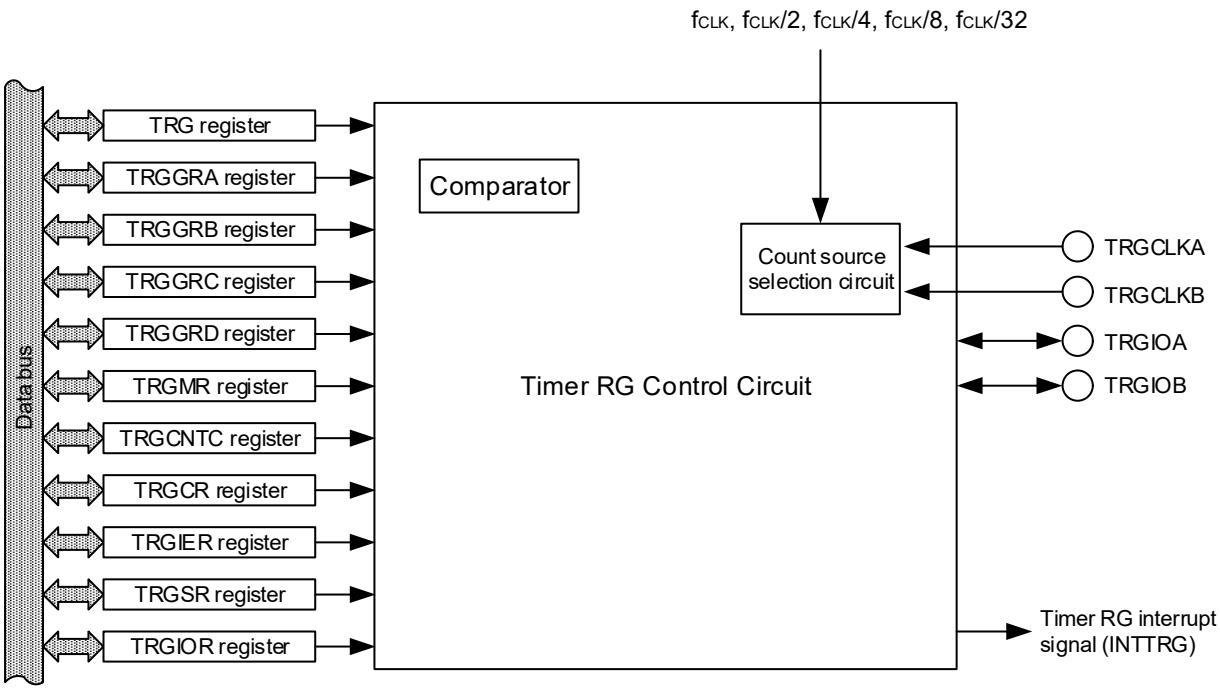

Table 9 - 1 Timer RG Pin Configuration

Pin Name	Alternate Port Name	I/O	Function
TRGCLKA	P00	Input	• In phase counting mode A-phase input • In other than phase counting mode External clock A input
TRGCLKB	P01	Input	• In phase counting mode B-phase input • In other than phase counting mode External clock B input
TRGIOA	P50	Input/Output	• In timer mode (output compare function) TRGGRA output-compare output • In timer mode (input capture function) TRGGRA input-capture input • In PWM mode PWM output
TRGIOB	P51	Input/Output	• In timer mode (output compare function) TRGGRB output-compare output • In timer mode (input capture function) TRGGRB input-capture input

9.3 Registers Controlling Timer RG

Table 9 - 2 lists the Registers Controlling Timer RG.

Table 9 - 2 Registers Controlling Timer RG

Register Name	Symbol
Peripheral enable register 1	PER1
Timer RG mode register	TRGMR
Timer RG count control register	TRGCNTC
Timer RG control register	TRGCR
Timer RG interrupt enable register	TRGIER
Timer RG status register	TRGSR
Timer RG I/O control register	TRGIOR
Timer RG counter	TRG
Timer RG general register A	TRGGRA
Timer RG general register B	TRGGRB
Timer RD general register C	TRGGRC
Timer RD general register D	TRGGRD
Port register 0	P0
Port register 5	P5
Port mode register 0	PM0
Port mode register 5	PM5

9.3.1 Peripheral enable register 1 (PER1)

The PER1 register is used to enable or disable supplying the clock to the peripheral hardware. Clock supply to the hardware that is not used is also stopped so as to decrease the power consumption and noise.

When using the timer RG, be sure to set bit 6 (TRGEN) to 1.

The PER1 register can be set by a 1-bit or 8-bit memory manipulation instruction.

Reset signal generation clears this register to 00H.

Figure 9 - 2 Format of Peripheral enable register 1 (PER1)

Address: F007AH After reset: 00H R/W

Symbol	7	6	5	4	3	2	1	0
PER1	DACEN	TRGEN	PGACMPEN	TRD0EN	DTCEN	PWMOPEN	TRXEN	TRJ0EN

TRGEN	Control of timer RG input clock supply
0	Stops input clock supply. • SFR used by timer RG cannot be written. • Timer RG is in the reset status.
1	Enables input clock supply. • SFR used by timer RG can be read and written.

Caution When setting timer RG, be sure to set the TRGEN bit to 1 first. If TRGEN = 0, writing to a control register of timer RG is ignored, and all read values are default values (except for port mode registers 0, 5 (PM0, PM5), and port registers 0, 5 (P0, P5)).

9.3.2 Timer RG mode register (TRGMR)

Figure 9 - 3 Format of Timer RG mode register (TRGMR)

Address: F0250H After reset: 00H R/W

Symbol	7	6	5	4	3	2	1	0
TRGMR	TRGSTART	TRGELCICE	TRGDFCK1	TRGDFCK0	TRGDFB	TRGDFA	TRGMDF	TRGPWM

TRGSTART	TRG count start
0	Count stops, and PWM output signal (TRGIOA pin) is initialized (in PWM mode)
1	Count starts

TRGELCICE	ELC input capture request select Notes 1, 2
0	External output signal B/digital filtering signal B is selected
1	Event input (input capture) from ELC is selected

TRGDFCK1	TRGDFCK0	Digital filter function clock select Note 1
0	0	$f_{CLK}/32$
0	1	$f_{CLK}/8$
1	0	f_{CLK}
1	1	Clock selected by bits TRGTCK0 to TRGTCK2 in TRGCR register

TRGDFB	Digital filer function select for TRGIOB pin
0	Digital filter function not used
1	Digital filter function used
When the digital filter is used, edge detection is performed after up to five cycles of the sampling clock.	

TRGDFA	Digital filer function select for TRGIOA pin
0	Digital filter function not used
1	Digital filter function used
When the digital filter is used, edge detection is performed after up to five cycles of the sampling clock.	

TRGMDF	Phase counting mode select
0	Increment
1	Phase counting mode
When the TRGMDF bit is set to 0, the counter counts the count source set by bits TRGTCK0 to TRGTCK2 in the TRGCR register. When the TRGMDF bit is set to 1, the counter counts the phase of input signals from the TRGCLKj pin (j = A or B) as listed in Table 9 - 15 Increment/Decrement Conditions for TRG Register	

TRGPWM	PWM mode select
0	Timer Mode
1	PWM mode

Note 1. Set this bit while the TRGSTART bit is 0 (count stops).

Note 2. To enable event input (input capture) from the ELC, set TRGIOB2 = 1 and TRGIOB1 and TRGIOB0 = 00B (rising edge) in the TRGIOR register.

9.3.3 Timer RG count control register (TRGCNTC)

The TRGCNTC register is used in phase counting mode. This register is used to set the count conditions for phase counting mode.

Figure 9 - 4 Format of Timer RG count control register (TRGCNTC)

Address: F0251H After reset: 00H R/W

Symbol	7	6	5	4	3	2	1	0
TRGCNTC	CNTEN7	CNTEN6	CNTEN5	CNTEN4	CNTEN3	CNTEN2	CNTEN1	CNTEN0

CNTEN7	Counter enable 7
0	Disabled
1	Increment When TRGCLKA input is low level and at the rising edge of TRGCLKB input

CNTEN6	Counter enable 6
0	Disabled
1	Increment When TRGCLKB input is high level and at the rising edge of TRGCLKA input

CNTEN5	Counter enable 5
0	Disabled
1	Increment When TRGCLKA input is high level and at the falling edge of TRGCLKB input

CNTEN4	Counter enable 4
0	Disabled
1	Increment When TRGCLKB input is low level and at the falling edge of TRGCLKA input

CNTEN3	Counter enable 3
0	Disabled
1	Decrement When TRGCLKB input is high level and at the falling edge of TRGCLKA input

CNTEN2	Counter enable 2
0	Disabled
1	Decrement When TRGCLKA input is low level and at the falling edge of TRGCLKB input

CNTEN1	Counter enable 1
0	Disabled
1	Decrement When TRGCLKB input is low level and at the rising edge of TRGCLKA input

CNTEN0	Counter enable 0
0	Disabled
1	Decrement When TRGCLKA input is high level and at the rising edge of TRGCLKB input

9.3.4 Timer RG control register (TRGCR)

When writing to the TRGCR register, make sure the TRGSTART bit in the TRGMR register is 0 (count stops).

Figure 9 - 5 Format of Timer RG control register (TRGCR)

Address: F0252H After reset: 00H R/W

Symbol	7	6	5	4	3	2	1	0
TRGCR	0	TRGCCLR1	TRGCCLR0	TRGCKEG1	TRGCKEG0	TRGTCK2	TRGTCK1	TRGTCK0

TRGCCLR1	TRGCCLR0	TRG register clear source select
0	0	Clear disabled
0	1	Clear by input capture or compare match with TRGGRA
1	0	Clear by input capture or compare match with TRGGRB
Other than above		Setting prohibited

TRGCKEG1	TRGCKEG0	External clock active edge select Notes 1, 2
0	0	Count at the rising edge
0	1	Count at the falling edge
1	0	Count at both the rising/falling edges
Other than above		Setting prohibited

TRGTCK2	TRGTCK1	TRGTCK0	Count source select Note 1
0	0	0	f_{CLK}
0	0	1	$f_{CLK}/2$
0	1	0	$f_{CLK}/4$
0	1	1	$f_{CLK}/8$
1	0	0	$f_{CLK}/32$
1	0	1	TRGCLKA input
1	1	1	TRGCLKB input
Other than above			Setting prohibited

Note 1. In phase counting mode, the settings of bits TRGTCK0 to TRGTCK2 and bits TRGCKEG0 and TRGCKEG1 are disabled and the operation of phase counting mode has priority.

Note 2. Bits TRGCKEG0 and TRGCKEG1 are enabled when bits TRGTCK0 to TRGTCK2 are set to an external clock (TRGCLKA or TRGCLKB). When not set to an external clock, they are disabled.

9.3.5 Timer RG interrupt enable register (TRGIER)

Figure 9 - 6 Format of Timer RG interrupt enable register (TRGIER)

Address: F0253H After reset: 00H R/W

Symbol	7	6	5	4	3	2	1	0
TRGIER	0	0	0	0	TRGOVIE	TRGUDIE	TRGIMIEB	TRGIMIEA

TRGOVIE	Overflow interrupt enable
0	Interrupt by TRGOVF bit disabled
1	Interrupt by TRGOVF bit enabled

TRGUDIE	Underflow interrupt enable
0	Interrupt by TRGUDF bit disabled
1	Interrupt by TRGUDF bit enabled

TRGIMIEB	Input-capture/compare-match interrupt enable B
0	Interrupt by TRGIMFB bit disabled
1	Interrupt by TRGIMFB bit enabled

TRGIMIEA	Input-capture/compare-match interrupt enable A
0	Interrupt by TRGIMFA bit disabled
1	Interrupt by TRGIMFA bit enabled

Remark TRGIMFA, TRGIMFB, TRGUDF, TRGOVF: Bits in TRGSR register

9.3.6 Timer RG status register (TRGSR)

Figure 9 - 7 Format of Timer RG status register (TRGSR)

Address: F0254H After reset: 00H R/W

Symbol	7	6	5	4	3	2	1	0
TRGSR	0	0	0	TRGDIRF	TRGOVF	TRGUDF	TRGIMFB	TRGIMFA

TRGDIRF	Count direction flag
0	TRG register is decremented
1	TRG register is incremented

TRGOVF	Overflow flag Note 1
[Condition for setting to 0] Write 0 after reading Note 2 [Condition for setting to 1] See **Table 9 - 3 Conditions for Setting Each Flag to 1**.	

TRGUDF	Underflow flag
[Condition for setting to 0] Write 0 after reading Note 2 [Condition for setting to 1] See **Table 9 - 3 Conditions for Setting Each Flag to 1**.	

TRGIMFB	Input-capture/compare-match flag B
[Condition for setting to 0] Write 0 after reading Notes 2, 3 [Condition for setting to 1] See **Table 9 - 3 Conditions for Setting Each Flag to 1**.	

TRGIMFA	Input-capture/compare-match flag A
[Condition for setting to 0] Write 0 after reading Notes 2, 3 [Condition for setting to 1] See **Table 9 - 3 Conditions for Setting Each Flag to 1**.	

Note 1. When the counter value of timer RG changes from FFFFH to 0000H, the TRGOVF bit is set to 1. Also, if the counter value of timer RG changes from FFFFH to 0000H due to an input capture/compare match during operation according to the settings of bits TRGCCLR0 and TRGCCLR1 in the TRGCR register, the TRGOVF bit is set to 1.

Note 2. The writing results are as follows:

- Writing 1 has no effect.
- If the read value is 0, the bit remains unchanged even if 0 is written to it.
  (Even if the bit is changed from 0 to 1.)
- If the read value is 1, writing 0 to the bit sets it to 0.
  When status flags of interrupt sources (applicable status flags) of the timer RG are set to 0 and their interrupts are disabled in the timer RG interrupt enable register (TRGIER), use either one of the following methods (a) to (c).

(a) Set 00H (all interrupts disabled) to timer RG interrupt enable register (TRGIER) and write 0 to applicable status flags.

(b) When there are bits set to 1 (interrupt-enabled) in timer RG interrupt enable register (TRGIER) and status flags of interrupt sources related to their bits are 0, write 0 to applicable status flags.

Example: To clear the TRGIMFB bit to 0 when bits TRGIMIEA and TRGOVIE are set to 1 (interrupt-enabled) and the TRGIMIEB bit is set to 0 (interrupt-disabled)

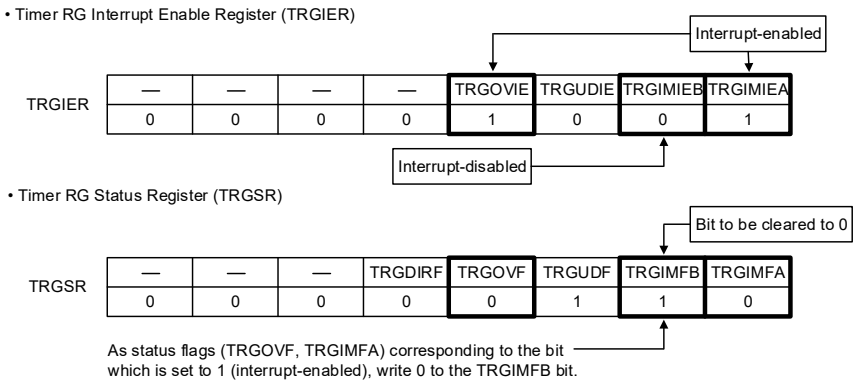

(c) When there are bits set to 1 (interrupt-enabled) in timer RG interrupt enable register (TRGIER) and status flags of interrupt sources related to their bits are 1, write 0 to these status flags and applicable status flags at the same time.

Example: To clear the TRGIMFB bit to 0 when the TRGIMIEA bit is set to 1 (interrupt-enabled) and the TRGIMIEB bit is set to 0 (interrupt-disabled).

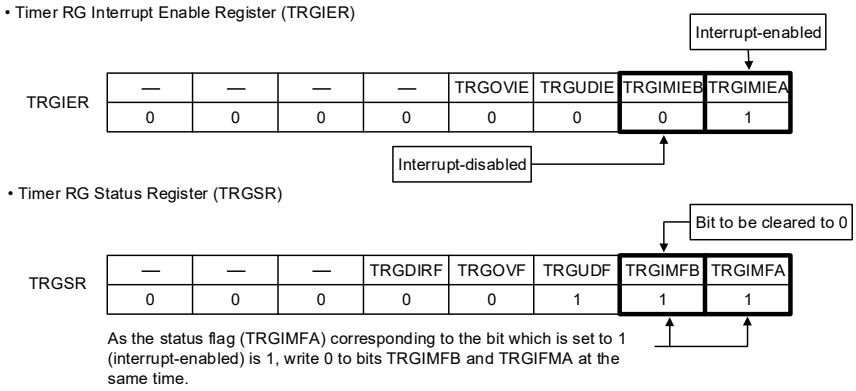

Note 3. When the DTC is used, bits TRGIMFA and TRGIMFB are set to 1 after DTC transfer is completed.

Table 9 - 3 Conditions for Setting Each Flag to 1

Bit Symbol	Timer Mode[Note 1]		PWM Mode
	Input Capture Function	Output Compare Function	
TRGOVF	When the TRG register overflows.		
TRGUDF	When the TRG register underflows (only in phase counting mode).		
TRGIMFB	Input edge of TRGIOB pin[Note 2]	When the values of registers TRG and TRGGRB match.	
TRGIMFA	Input edge of TRGIOA pin[Note 2]	When the values of registers TRG and TRGGRA match.	

Note 1. Phase counting mode is the counting method of the timer RG count register. The above timer modes and PWM mode can be used by making the corresponding settings.

Note 2. Edge selected by bits TRGIOj0 and TRGIOj1 (j = A or B) in the TRGIOR register.

9.3.7 Timer RG I/O control register (TRGIOR)

Figure 9 - 8 Format of Timer RG I/O control register (TRGIOR)

Address: F0255H After reset: 00H R/W

Symbol	7	6	5	4	3	2	1	0
TRGIOR	TRGBUFB	TRGIOB2	TRGIOB1	TRGIOB0	TRGBUFA	TRGIOA2	TRGIOA1	TRGIOA0

TRGBUFB	TRGGRD register function select
0	Not used as buffer register for TRGGRB register
1	Used as buffer register for TRGGRB register

TRGIOB2	TRGGRB mode select[Notes 1, 2]
0	Output compare function
1	Input capture function

TRGIOB1	TRGIOB0	TRGGRB control
0	0	Pin output by compare match is disabled
0	1	Low output
1	0	High output
1	1	Toggle output
In the output compare function, output of compare match between registers TRG and TRGGRB		

TRGIOB1	TRGIOB0	TRGGRB control
0	0	Rising edge of TRGIOB
0	1	Falling edge of TRGIOB
1	0	Both edges of TRGIOB
Other than above		Setting prohibited
In the input capture function, input capture of content of TRG register to TRGGRB register		

TRGBUFA	TRGGRC register function select
0	Not used as buffer register for TRGGRA register
1	Used as buffer register for TRGGRA register

TRGIOA2	TRGGRA mode select[Notes 1, 2]
0	Output compare function
1	Input capture function

TRGIOA1	TRGIOA0	TRGGRA control
0	0	Pin output by compare match is disabled
0	1	Low output
1	0	High output
1	1	Toggle output
In the output compare function, output of compare match between registers TRG and TRGGRA		

TRGIOA1	TRGIOA0	TRGGRA control
0	0	Rising edge of TRGIOA
0	1	Falling edge of TRGIOA
1	0	Both edges of TRGIOA
Other than above		Setting prohibited
In the input capture function, input capture of content of TRG register to TRGGRA register		

Note 1. When the TRGIOj2 (j = A or B) bit is 1 (input capture function), the TRGGRj register functions as an input capture register.

Note 2. When the TRGIOj2 (j = A or B) bit is 0 (output compare function), the TRGGRj register functions as a compare match register. After a reset, the TRGIOj pin outputs as follows until bits TRGIOj0 and TRGIOj1 are set and the first compare match occurs.

TRGIOj1 and TRGIOj0 = 01B: High output
10B: Low output
11B: Low output

This TRGIOR register controls I/O pins in timer mode. It is disabled in PWM mode. It is disabled in PWM mode. Set the TRGIOR register while the count is stopped (TRGSTART in TRGMR register = 0).

9.3.8 Timer RG counter (TRG)

The TRG register is connected to the CPU via the internal 16-bit bus and should be always accessed in 16-bit units. This register operates incrementing and can also operate free-running, period counting, or external event counting. It can be cleared to 0000H by the compare match with the corresponding TRGGRA or TRGGRB register, or the input capture to registers TRGGRA and TRGGRB (count clear function).

When the TRG register overflows (FFFFH → 0000H), the TRGOVF flag in the TRGSR register is set to 1.

When the TRG register underflows (0000H → FFFFH), the TRGUDF flag in the TRGSR register is set to 1.

Figure 9 - 9 Format of Timer RG counter (TRG)

Address: F0256H After reset: 0000H RW

Symbol	15	14	13	12	11	10	9	8	7	6	5	4	3	2	1	0
TRG																

—	Function	Setting Range
Bits 15 to 0	In phase counting mode, count operation is increment/decrement. In other modes, count operation is increment.	0000H to FFFFH

9.3.9 Timer RG general registers A, B, C, and D (TRGGRA, TRGGRB, TRGGRC, TRGGRD)

Registers TRGGRA and TRGGRB are 16-bit readable/writable registers with both the output compare and input capture register functions. These functions can be switched by setting the TRGIOR register.

When registers TRGGRA and TRGGRB are used as output compare registers, the values of registers TRGGRA and TRGGRB and the value of the TRG register are always compared. When their values match (compare match), bits TRGIMFA and TRGIMFB in the TRGSR register are set to 1. Compare match output can be set by the TRGIOR register.

When registers TRGGRA and TRGGRB are used as input capture registers, the value of the TRG register is stored upon detecting externally input capture signals. At this time, the TRGIMFA/TRGIMFB bit is set to 1. The detection edge of input capture signals is selected by setting the TRGIOR register.

The TRGGRC register can also be used as the buffer register for the TRGGRA register and the TRGGRD register can be used as the buffer register for the TRGGRB register, respectively. These functions can be selected by setting bits TRGBUFA and TRGBUFB in the TRGIOR register.

For example, when the TRGGRA register is set as an output compare register and the TRGGRC register is set as the buffer register for the TRGGRA register, the value of the TRGGRC register is transferred to the TRGGRA register each time compare match A occurs.

When the TRGGRA register is set as an input capture register and the TRGGRC register is set as the buffer register for the TRGGRA register, the value of the TRG register is transferred to the TRGGRA register and the value of the TRGGRA register value is transferred to the TRGGRC register each time an input capture occurs.

Registers TRGGRA, TRGGRB, TRGGRC, and TRGGRD can be read or written in 16-bit units.

Figure 9 - 10 Format of Timer RG general registers A, B, C, and D (TRGGRA, TRGGRB, TRGGRC, TRGGRD)

Address: F0258H (TRGGRA), F025AH (TRGGRB), FFF60H (TRGGRC), FFF62H (TRGGRD) After Reset: FFFFH RW

Symbol	15	14	13	12	11	10	9	8	7	6	5	4	3	2	1	0
TRGGRj																

—	Function
Bits 15 to 0	Function varies depending on the mode or the function. Table 9 - 4 lists the TRGGRA, TRGGRB, TRGGRC, and TRGGRD Register Functions.

Remark j = A, B, C, D

Table 9 - 4 TRGGRA, TRGGRB, TRGGRC, and TRGGRD Register Functions

Mode, Function	Register	Setting	Function
Input capture	TRGGRA	TRGIOR (TRGIOA2 = 1) TRGMR (TRGPWM = 0)	Input capture register (stores value of TRG register)
	TRGGRB	TRGIOR (TRGIOB2 = 1) TRGMR (TRGPWM = 0)	Input capture register (stores value of TRG register)
Output compare	TRGGRA	TRGIOR (TRGIOA2 = 0) TRGMR (TRGPWM = 0)	Output compare register (stores compare value with TRG register and outputs set value to TRGIOA at compare match)
	TRGGRB	TRGIOR (TRGIOB2 = 0) TRGMR (TRGPWM = 0)	Output compare register (stores compare value with TRG register and outputs set value to TRGIOB at compare match)
PWM	TRGGRA	TRGMR (TRGPWM = 1)	Output compare register (outputs high level to TRGIOA at compare match)
	TRGGRB		Output compare register (outputs low level to TRGIOA at compare match)
Common	TRGGRC	TRGIOR (TRGBUFA = 0)	Not used
	TRGGRD	TRGIOR (TRGBUFB = 0)	Not used
	TRGGRC	TRGIOR (TRGBUFA = 1)	Buffer register for TRGGRA (transfers from/to TRGGRA) • When TRGIOA2 = 1 Input capture signal: Receive previous input capture value from TRGGRA • When TRGIOA2 = 0 TRG and TRGGRA compare match: Send next expected compare value to TRGGRA
	TRGGRD	TRGIOR (TRGBUFB = 1)	Buffer register for TRGGRB (transfers from/to TRGGRB) • When TRGIOB2 = 1 Input capture signal: Receive previous input capture value from TRGGRB • When TRGIOB2 = 0 TRG and TRGGRB compare match: Send next expected compare value to TRGGRB

Caution When the setting of bits TRGTCK2 to TRGTCK0 in the TRGCR register is 000B (f_{CLK}) and the compare value is set to 0000H, a request signal to the DTC and the ELC is generated only once immediately after the count starts. When the compare value is 0001H or higher, a request signal is generated each time a compare match occurs.

9.3.10 Port mode registers 0, 5 (PM0, PM5)

These registers set input/output of ports 0, 5 in 1-bit units.
When using the ports (P50/TRGIOA, P51/TRGIOB) to be shared with the timer output pin for timer output, set the port mode register (PMxx) bit and port register (Pxx) bit corresponding to each port to 0.

Example: When using P50/TRGIOA for timer output
Set the PM50 bit of port mode register 5 to 0.
Set the P50 bit of port register 5 to 0.

When using the ports (P50/TRGIOA, P51/TRGIOB) to be shared with the timer input pin for timer input, set the port mode register (PMxx) bit corresponding to each port to 1. At this time, the port register (Pxx) bit may be 0 or 1.

Example: When using P50/TRGIOA for timer input
Set the PM50 bit of port mode register 5 to 1.
Set the P50 bit of port register 5 to 0 or 1.

The PM0 and PM5 registers can be set by a 1-bit or 8-bit memory manipulation instruction.
Reset signal generation sets these registers to FFH.

Figure 9 - 11 Format of Port mode registers 0, 5 (PM0, PM5) (64-pin products)

Address: FFF20H After reset: FFH R/W

Symbol	7	6	5	4	3	2	1	0
PM0	1	PM06	PM05	PM04	PM03	PM02	PM01	PM00

Address: FFF25H After reset: FFH R/W

Symbol	7	6	5	4	3	2	1	0
PM5	1	1	PM55	PM54	PM53	PM52	PM51	PM50

PMmn	Pmn pin I/O mode selection (m = 0, 5; n = 0 to 7)
0	Output mode (output buffer on)
1	Input mode (output buffer off)

Remark The figure shown above presents the format of port mode registers 0 and 5 of the 64-pin products. The format of the port mode register of other products, see **Tables 4 - 4** to **4 - 6 PMxx, Pxx, PUxx, PIMxx, POMxx, PMCxx registers and the bits mounted on each product**.

9.4 Timer RG Operation

9.4.1 Items Common to Multiple Modes and Functions

(1) Count Sources

Table 9 - 5 lists the Count Source Selection and Figure 9 - 12 shows the Count Source Block Diagram.

When phase counting mode is selected, the settings of bits TRGTCK0 to TRGTCK2 and bits TRGCKEG0 and TRGCKEG1 in the TRGCR register are disabled.

Table 9 - 5 Count Source Selection

Count Source	Selection Method
f_{CLK}, $f_{CLK}/2$, $f_{CLK}/4$, $f_{CLK}/8$, $f_{CLK}/32$	The count source is selected by bits TRGTCK0 to TRGTCK2 in the TRGCR register.
External signal input to TRGCLKA or TRGCLKB pin	Bits TRGTCK2 to TRGTCK0 in the TRGCR register are set to 101B (TRGCLKA input) or 111B (TRGCLKB input). The active edge is selected by bits TRGCKEG0 and TRGCKEG1 in the TRGCR register. The corresponding bit of the port mode register is set to 1 (input mode).

Figure 9 - 12 Count Source Block Diagram

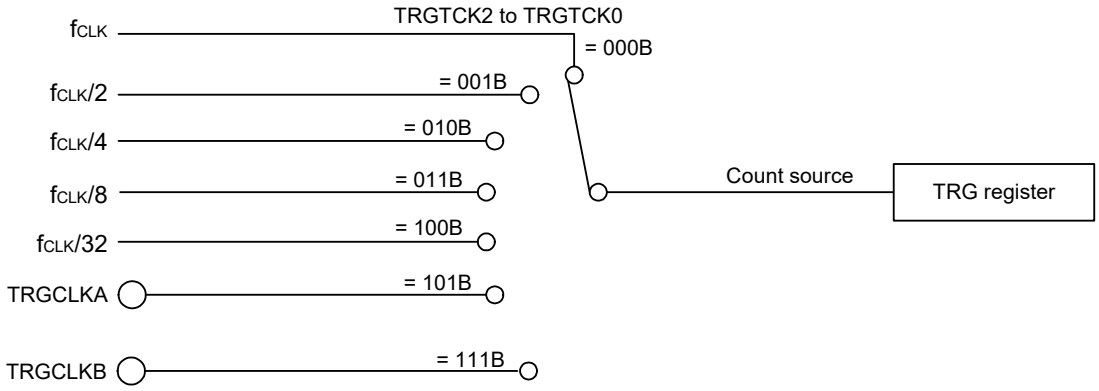

Remark TRGTCK0 to TRGTCK2: Bits in TRGCR register

The pulse width of an external clock input to the TRGCLKj pin (j = A or B) should be set to three cycles or more of the timer RG operating clock (f_{CLK}).

(2) Buffer Operation

The TRGBUFA or TRGBUFB bit in the TRGIOR register can be used to select the TRGGRC or TRGGRD register as the buffer register for the TRGGRA or TRGGRB register.

Buffer register for TRGGRA register: TRGGRC register

Buffer register for TRGGRB register: TRGGRD register

Buffer operation differs depending on the mode. Table 9 - 6 lists the Buffer Operation in Each Mode, Figure 9 - 13 shows the Buffer Operation for Input Capture Function and Figure 9 - 14 shows the Buffer Operation for Output Compare Function.

Table 9 - 6 Buffer Operation in Each Mode

Function, Mode	Transfer Timing	Transfer Destination Register
Input capture function	Input capture signal input	The content of the TRGGRA (TRGGRB) register is transferred to the buffer register.
Output compare function	Compare match between the TRG register and the TRGGRA (TRGGRB) register	The content of the buffer register is transferred to the TRGGRA (TRGGRB) register.
PWM mode		

Figure 9 - 13 Buffer Operation for Input Capture Function

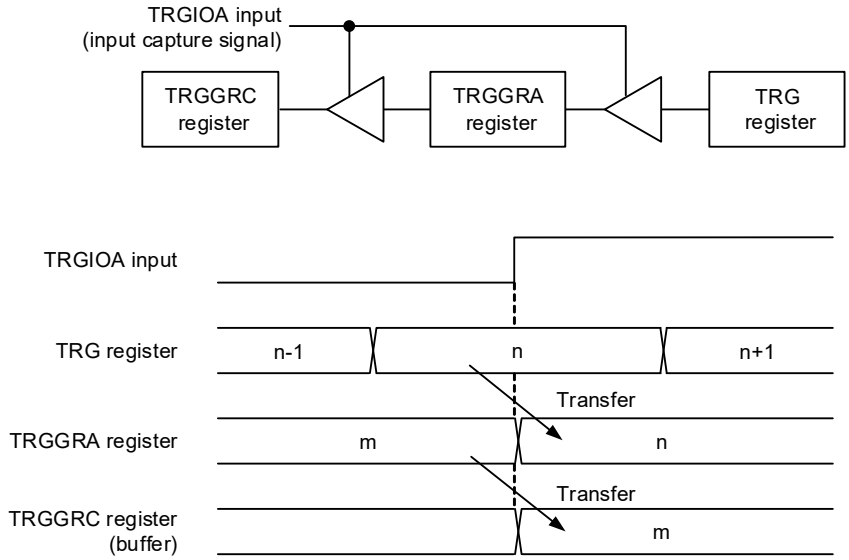

The above diagram applies under the following conditions:
• The TRGBUFA bit in the TRGIOR register is set to 1 (TRGGRC register is used as buffer register for TRGGRA register).
• Bits TRGIOA2 to TRGIOA0 in the TRGIOR register are set to 100B (input capture at the rising edge).

Figure 9 - 14 Buffer Operation for Output Compare Function

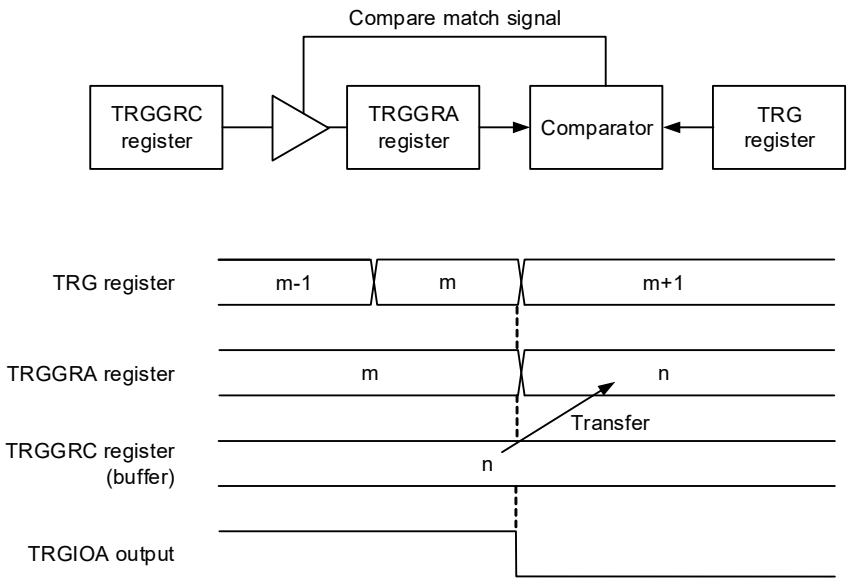

The above diagram applies under the following conditions:
• The TRGBUFA bit in the TRGIOR register is set to 1 (TRGGRC register is used as buffer register for TRGGRA register).
• Bits TRGIOA2 to TRGIOA0 in the TRGIOR register are set to 001B (low output by compare match).

(3) Digital Filter

The TRGIOj input (j = A or B) is sampled, and when the sampled input level matches three times, its level is determined. Select the digital filter function and sampling clock using the TRGMR register.

Figure 9 - 15 shows a Block Diagram of Digital Filter.

Figure 9 - 15 Block Diagram of Digital Filter

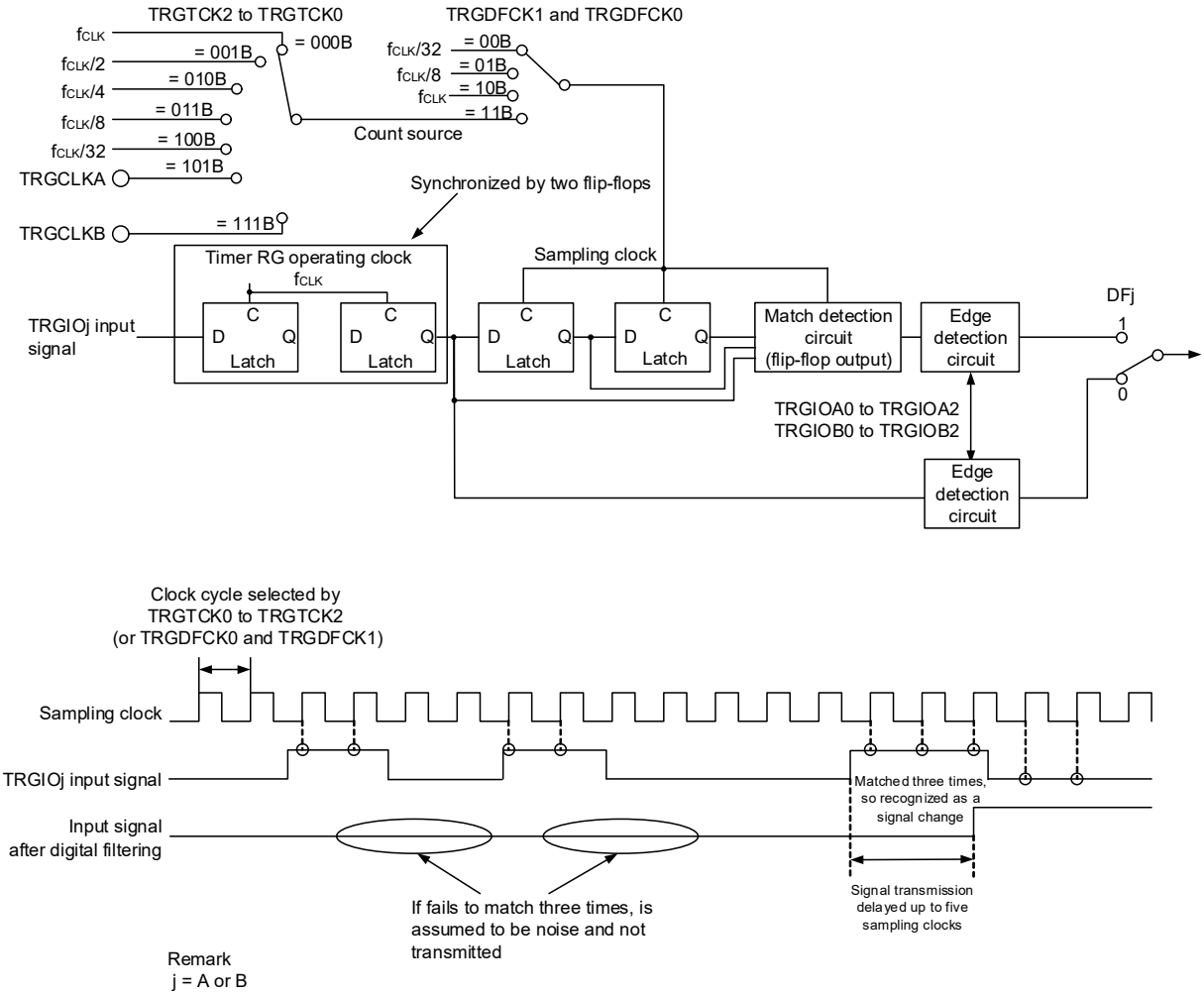

Remark
j = A or B

TRGTCK0 to TRGTCK2: Bits in TRGCR register
TRGDFCK0, TRGDFCK1, TRGDFj: Bits in TRGMR register
TRGIOA0 to TRGIOA2, TRGIOB0 to TRGIOB2: Bits in TRGIOR register

(4) Event Input from Event Link Controller (ELC)

Timer RG performs input capture operation B by event input from the ELC. The TRGIMFB bit in the TRGSR register is set to 1 at this time.

To use this function, select the input capture function of timer mode/phase counting mode, and set the TRGELCICE bit in the TRGMR register to 1. This function is disabled in other modes (the output compare function of timer mode/phase counting mode and PWM mode).

Setting procedure

<1> Set timer RG as the ELC event link destination.

<2> Set the TRGELCICE bit in the TRGMR register to 1.

(5) Event Output to Event Link Controller (ELC)

Table 9 - 7 lists the ELC Event Output according to TRGIMFA Bit. Table 9 - 8 lists the ELC Event Output according to TRGIMFB Bit.

Table 9 - 7 ELC Event Output according to TRGIMFA Bit

Mode, Function	ELC Source
Input capture function (TRGPWM = 0, TRGIOA2 = 1)	Detection of TRGIOA edge set by bits TRGIOA0 and TRGIOA1
Output compare function (TRGPWM = 0, TRGIOA2 = 0)	Compare match between registers TRG and TRGGRA
PWM mode (TRGPWM = 1)	Compare match between registers TRG and TRGGRA

Remark TRGPWM: Bit in TRGMR register
TRGIOA0, TRGIOA1, TRGIOA2: Bits in TRGIOR register

Table 9 - 8 ELC Event Output according to TRGIMFB Bit

Mode, Function	ELC Source
Input capture function (TRGPWM = 0, TRGIOB2 = 1)	Detection of TRGIOB edge set by bits TRGIOB0 and TRGIOB1
Output compare function (TRGPWM = 0, TRGIOB2 = 0)	Compare match between registers TRG and TRGGRB
PWM mode (TRGPWM = 1)	Compare match between registers TRG and TRGGRB

Remark TRGPWM: Bit in TRGMR register
TRGIOB0, TRGIOB1, TRGIOB2: Bits in TRGIOR register

9.4.2 Timer Mode (Input Capture Function)

The value of the TRG register can be transferred to registers TRGGRA and TRGGRB upon detecting the input edge of the input capture/output compare pins (TRGIOA and TRGIOB). The detection edge can be selected from the rising edge/falling edge/both edges.

The input capture function can be used for measuring pulse widths and periods.

Table 9 - 9 lists the Input Capture Function Specifications.

Table 9 - 9 Input Capture Function Specifications

Item	Specification
Count sources	f_{CLK}, $f_{CLK}/2$, $f_{CLK}/4$, $f_{CLK}/8$, $f_{CLK}/32$ External signal input to the TRGCLKA or TRGCLKB pin (active edge selectable by a program)
Count operation	Increment
Count period	When bits TRGCCLR1 to TRGCCLR0 in the TRGCR register are set to 00B (free-running operation) 1/fk × 65,536 fk: Frequency of count source
Count start condition	1 (count starts) is written to the TRGSTART bit in the TRGMR register.
Count stop condition	0 (count stops) is written to the TRGSTART bit in the TRGMR register.
Interrupt request generation timing	• Input capture (active edge of TRGIOA and TRGIOB pin input) • TRG register overflow
TRGIOA, TRGIOB pin function	I/O port or input-capture input (selectable for each pin)
TRGCLKA, TRGCLKB pin function	I/O port or external clock input
Read from timer	The count value can be read by reading the TRG register.
Write to timer	The TRG register can be written to.
Selectable functions	• Input-capture input pin selection Either one or both of pins TRGIOA and TRGIOB • Active edge selection for input-capture input Rising edge, falling edge, or both rising and falling edges • Timing for setting the TRG register to 0000H At overflow or input capture • Buffer operation (see **9.4.1 (2) Buffer Operation**) • Digital filter (see **9.4.1 (3) Digital Filter**) • Input capture operation by event input signal (input capture) from ELC

(1) Procedure Example for Setting Input Capture Operation

Figure 9 - 16 shows a Procedure Example for Setting Input Capture Operation.

Figure 9 - 16 Procedure Example for Setting Input Capture Operation

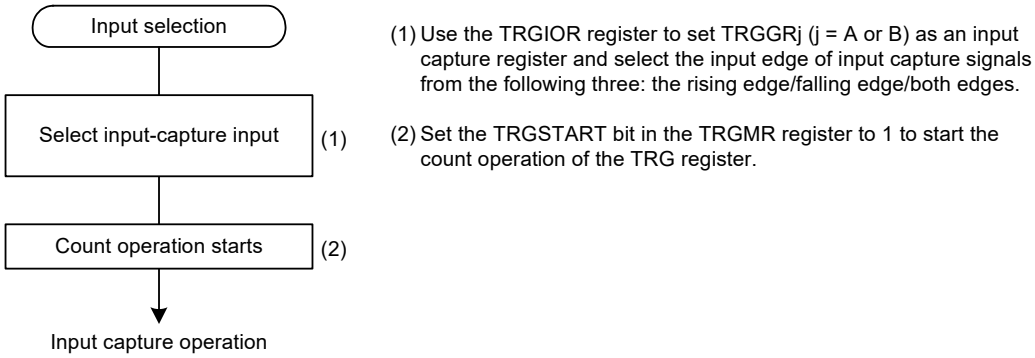

(2) Input Capture Signal Timing

For input-capture input, the rising edge/falling edge/both edges can be selected by setting the TRGIOR register.

Figure 9 - 17 shows the Input-Capture Input Signal Timing.

The pulse width of input-capture input signals should be 1.5 f_{CLK} or more for a single edge and 2.5 f_{CLK} or more for both edges.

Figure 9 - 17 Input-Capture Input Signal Timing

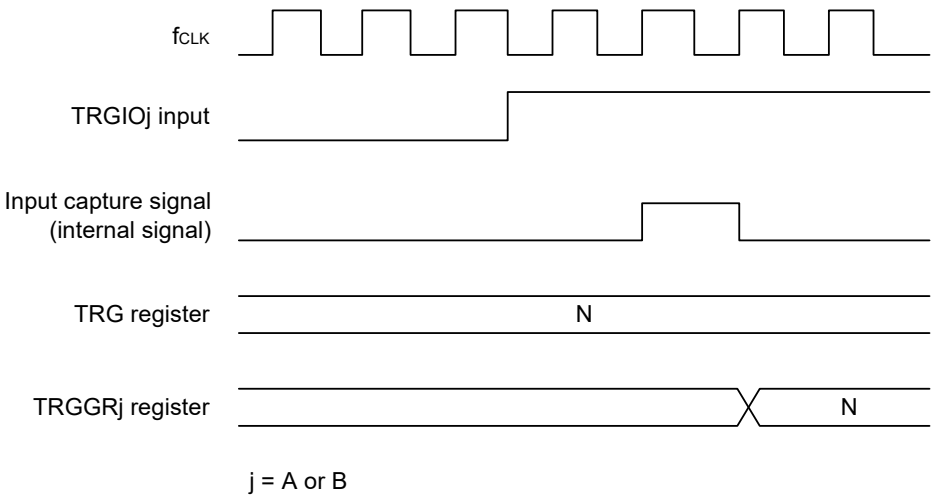

(3) Operation Example

Figure 9 - 18 shows an Operation Example of Input Capture.

This example applies when both the rising/falling edges are selected as the input-capture input edge of the TRGIOA pin and the falling edge is selected as the input-capture input edge of the TRGIOB pin, and the TRG register is set to be cleared by the input capture to the TRGGRB register.

(a) Use the TRGIOR register to set registers TRGGRA and TRGGRB as input capture registers and select the input edge of input capture signals from the following three: the rising edge/falling edge/both edges.

(b) Set the TRGSTART bit in TRGMR to 1 and start the count operation of the TRG register.

Figure 9 - 18 Operation Example of Input Capture

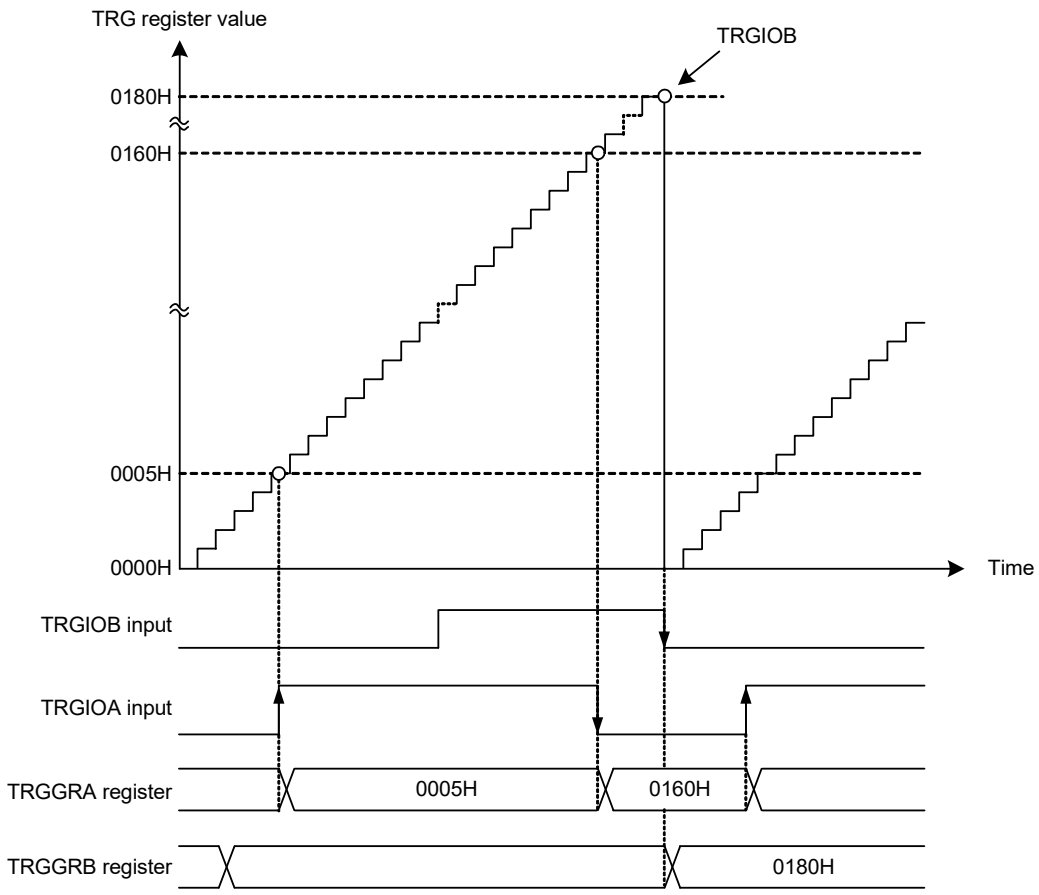

By setting bits TRGCCLR0 and TRGCCLR1 in the TRGCR register, the count can be cleared by input capture A or B.

Figure 9 - 18 shows an operation example with bits TRGCCLR1 and TRGCCLR0 set to 10B. If the input capture operation has been set to clear the count during operation and is performed when the timer count value is FFFFH, depending on the timing between the count source and input capture operation interrupt flags bits TRGIMFA, TRGIMFB, and TRGOVF may be set to 1 simultaneously.

9.4.3 Timer Mode (Output Compare Function)

This mode (output compare function) detects when the contents of the TRG register and the TRGGRA or TRGGRB register match (compare match). When a match occurs, a signal is output from the TRGIOA or TRGIOB pin at a given level.

Table 9 - 10 lists the Output Compare Function Specifications.

Table 9 - 10 Output Compare Function Specifications

Item	Specification
Count sources	f_{CLK}, $f_{CLK}/2$, $f_{CLK}/4$, $f_{CLK}/8$, $f_{CLK}/32$ External signal input to the TRGCLKj pin (active edge selectable by a program)
Count operation	Increment
Count periods	• When bits TRGCCLR1 and TRGCCLR0 in the TRGCR register are set to 00B (free-running operation) 1/fk × 65,536 fk: Frequency of count source • When bits TRGCCLR1 and TRGCCLR0 in the TRGCR register are set to 01B or 10B (TRG is set to 0000H by compare match with TRGGRj) 1/fk × (n + 1) n: Value set in the TRGGRj register
Waveform output timing	Compare match (contents of registers TRG and TRGGRj match)
Count start condition	1 (count starts) is written to the TRGSTART bit in the TRGMR register.
Count stop condition	0 (count stops) is written to the TRGSTART bit in the TRGMR register.
Interrupt request generation timing	• Compare match (contents of registers TRG and TRGGRj match) • TRG register overflow
TRGIOA, TRGIOB pin function	I/O port or output-compare output (selectable for each pin)
TRGCLKA, TRGCLKB pin function	I/O port or external clock input
Read from timer	The count value can be read by reading the TRG register.
Write to timer	The TRG register can be written to.
Selectable functions	• Output-compare output pin selection Either one or both of pins TRGIOA and TRGIOB • Output level selection at compare match Low output, high output, or inverted output level • Timing for setting the TRG register to 0000H Overflow or compare match with the TRGGRj register • Buffer operation (see **9.4.1 (2) Buffer Operation**)

Remark j = A or B

(1) Procedure Example for Setting Waveform Output by Compare Match

Figure 9 - 19 shows a Procedure Example for Setting Waveform Output by Compare Match.

Figure 9 - 19 Procedure Example for Setting Waveform Output by Compare Match

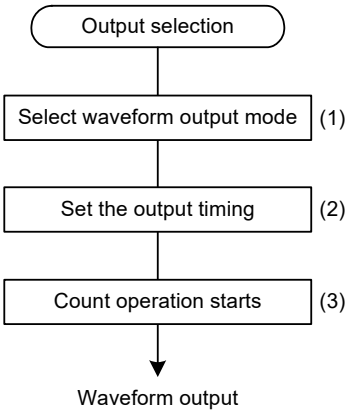

(1) Use the TRGIOR register to select the compare match output from the following three: Low output/high output/toggle output. When waveform output mode is set, the ports function as compare match output pins (TRGIOA and TRGIOB). The output levels of these pins depend on the settings of bits TRGIOA0 and TRGIOA1 and bits TRGIOB0 and TRGIOB1 in the TRGIOR register until the first compare match occurs.

(2) Set the timing for generating a compare match into registers TRGGRA and TRGGRB.

(3) Set the TRGSTART bit in the TRGMR register to 1 to start the count operation of the TRG register.

(2) Output-Compare Output Timing

A compare match signal is generated at the last state when the TRG register and the TRGGRA or TRGGRB register match (at the timing for updating the count value that the TRG register matches). When the compare match signal is generated, the output value set by the TRGIOR register is output to the output-compare output pin (TRGIOA or TRGIOB). After the TRG register and the TRGGRA or TRGGRB register match, no compare match signal is generated until the TRG input clock is generated.

Figure 9 - 20 shows the Output-Compare Output Timing.

Figure 9 - 20 Output-Compare Output Timing

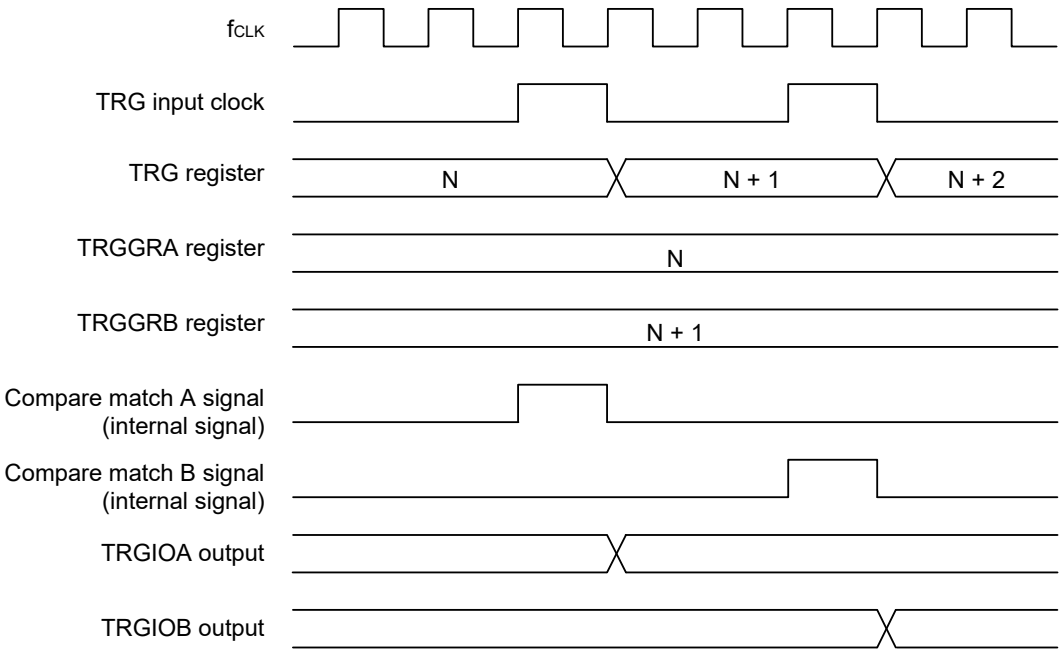

(3) Operation Example

Figure 9 - 21 shows an Operation Example of Low Output and High Output.

This example applies when the TRG register is set for free-running operation, and low output is set at compare match A, and high output is set at compare match B. When the set level and the pin level match, the pin level does not change.

Figure 9 - 21 Operation Example of Low Output and High Output

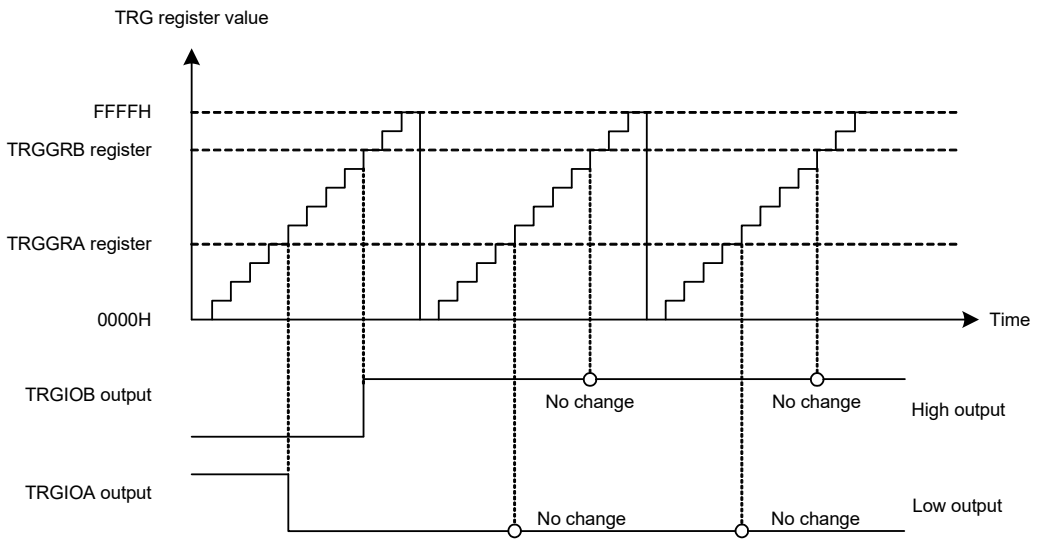

Figure 9 - 22 shows the Operation Example of Toggle Output. This example applies when the TRG register is set for period counting operation (counter clear at compare match B), and toggle output is set at both compare match A and B.

(a) Use the TRGIOR register to select the compare match output from the following three: Low output/high output/toggle output. When waveform output mode is set, the ports function as compare match output pins (TRGIOA and TRGIOB).

(b) Set the timing for generating a compare match into registers TRGGRA and TRGGRB.

(c) Set the TRGSTART bit in the TRGMR register to 1 to start the count operation of the TRG register.

The compare match output pins (TRGIOA and TRGIOB) are not initialized by setting the TRGSTART bit to 0 during operation. To return to initial values, write to the TRGIOR register to initialize the output. (The output is only initialized when bits TRGIOA0, TRGIOA1, TRGIOB0, and TRGIOB1 in the TRGIOR register are set to low output or high output.) By setting bits TRGCCLR0 and TRGCCLR1 in the TRGCR register, the timer RG counter value is reset by an input capture/compare match (match with the TRGGRA or TRGGRB register). If the expected compare value is FFFFH at this time, FFFFH changes to 0000H, same as the overflow operation, and the TRGOVF bit is set to 1.

This operation is the same for modes where the output compare function is used on the timer RG counter value and expected compare value.

Figure 9 - 22 Operation Example of Toggle Output

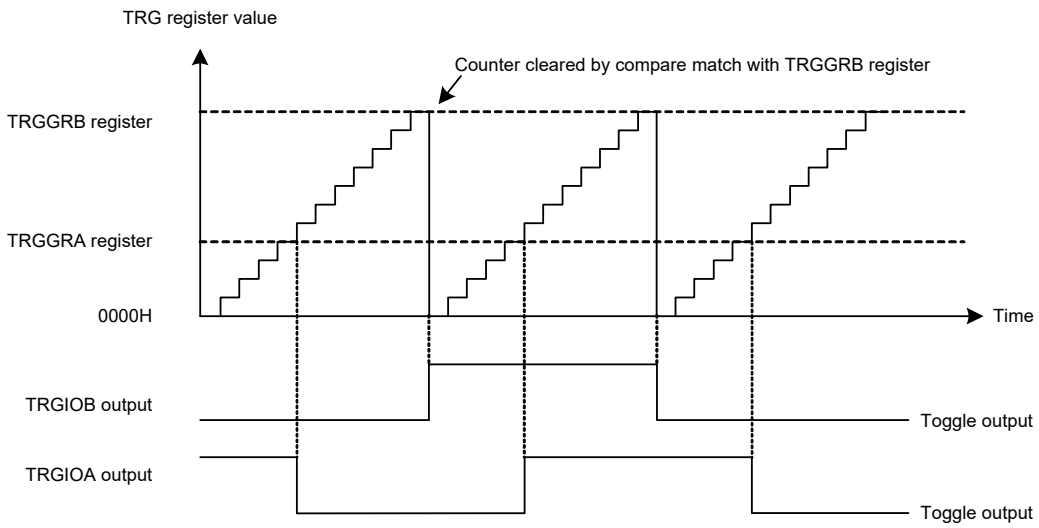

9.4.4 PWM Mode

In PWM mode, registers TRGGRA and TRGGRB are used as a pair and a PWM waveform is output from the TRGIOA output pin. The output setting by the TRGIOR register is invalid for the pins set to PWM mode. Set the high output timing for a PWM waveform into the TRGGRA register and the low output timing for a PWM waveform into the TRGGRB register.

By setting the compare match with either the TRGGRA or TRGGRB register as the counter clear source for the TRG register, a PWM waveform with duty cycle 0% to 100% can be output from the TRGIOA pin.

Table 9 - 11 lists the PWM Mode Specifications and Table 9 - 12 lists the Combination of PWM Output Pins and Registers. When the setting values in registers TRGGRA and TRGGRB are the same, the output value does not change even if a compare match occurs.

Table 9 - 11 PWM Mode Specifications

Item	Specification
Count sources	f_{CLK}, $f_{CLK}/2$, $f_{CLK}/4$, $f_{CLK}/8$, $f_{CLK}/32$ External signal input to the TRGCLKj pin (active edge selectable by a program)
Count operation	Increment
PWM waveform	• The high output timing of a PWM waveform is set into the TRGGRA register. • The low output timing of a PWM waveform is set into the TRGGRB register.
Count start condition	1 (count starts) is written to the TRGSTART bit in the TRGMR register.
Count stop condition	0 (count stops) is written to the TRGSTART bit in the TRGMR register.
Interrupt request generation timing	• Compare match (contents of registers TRG and TRGGRj match) • TRG register overflow
TRGIOA pin function	PWM output
TRGIOB pin function	I/O port
TRGCLKA, TRGCLKB pin function	I/O port or external clock input
Read from timer	The count value can be read by reading the TRG register.
Write to timer	The TRG register can be written to.
Selectable functions	• Timing for setting the TRG register to 0000H Overflow or compare match with the TRGGRj register • Buffer operation (see **9.4.1 (2) Buffer Operation**)

Remark j = A or B

Table 9 - 12 Combination of PWM Output Pins and Registers

Output Pin	High Output	Low Output
TRGIOA	TRGGRA	TRGGRB
TRGIOB	I/O port function	

(1) Procedure Example for Setting PWM Mode

Figure 9 - 23 shows a Procedure Example for Setting PWM Mode.

Figure 9 - 23 Procedure Example for Setting PWM Mode

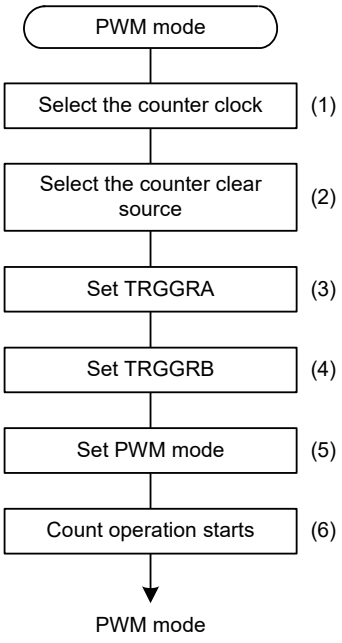

(1) Use bits TRGTCK0 to TRGTCK2 in the TRGCR register to select the count source. When an external clock is selected, use bits TRGCKEG0 and TRGCKEG1 in the TRGCR register to select the edge of the clock.

(2) Use bits TRGCCLR0 and TRGCCLR1 in the TRGCR register to select the counter clear source.

(3) Set the high output timing for a PWM output waveform into the TRGGRA register.

(4) Set the low output timing for a PWM output waveform into the TRGGRB register.

(5) Use the TRGPWM bit in the TRGMR register to set PWM mode. When PWM mode is set, registers TRGGRA and TRGGRB are set as the output compare registers for setting the high output/low output timing for a PWM output waveform, regardless of the content of the TRGIOR register.
When the PM00 bit in the PM0 register is 0 and the P00 bit in the P0 register is 0, the TRGIOA pin automatically functions as a PWM output pin. However, the TRGIOB pin functions as an I/O port.

(6) Set the TRGSTART bit in the TRGMR register to 1 to start the count operation of the TRG register.

(2) Operation Example

Figure 9 - 24 shows an Operation Example (1) in PWM Mode.

When the PM00 bit in the PM0 register is 0 and the P00 bit in the P0 register is 0, the TRGIOA pin automatically functions as an output pin, and high output is set at the compare match with the TRGGRA register and low output is set at the compare match with the TRGGRB register. However, regardless of the setting of the TRGIOR register, the TRGIOB pin functions as an I/O port.

This example applies when the compare match with the TRGGRA or TRGGRB register is set as the counter clear source for the TRG register. The initial state of the TRGIOA pin depends only on the counter clear sources. This correspondence is shown in Table 9 - 13.

This initialization is performed when the TRGSTART bit in the TRGMR register is 0 (count stops).

Table 9 - 13 Correspondence between Initial State of TRGIOA Pin and Counter Clear Sources

Counter Clear Source	Initial State of TRGIOA Pin
Compare match with TRGGRA register	High
Compare match with TRGGRB register	Low

When bits TRGCCLR1 and TRGCCLR0 in the TRGCR register are set to 00B (clear disabled), the initial state of the TRGIOA pin becomes high.

Figure 9 - 24 Operation Example (1) in PWM Mode

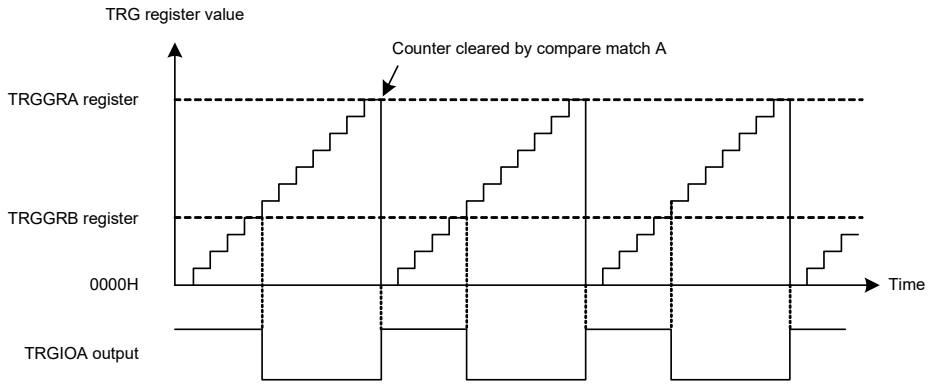

(a) Counter clear by the compare match with the TRGGRA register

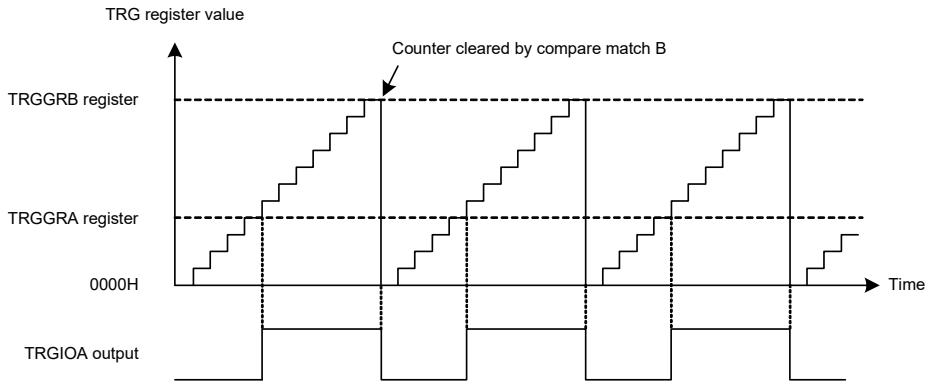

(b) Counter clear by the compare match with the TRGGRB register

Figure 9 - 25 shows an example for outputting a PWM waveform with duty cycle 0% and duty cycle 100%.
A PWM waveform is set to duty cycle 0% when the compare match with the TRGGRB register is set as the counter clear source with the following:
Value set in TRGGRA register > Value set in TRGGRB register
A PWM waveform is set to duty cycle 100% when the compare match with TRGGRA register is set as the counter clear source with the following:
Value set in TRGGRB register > Value set in TRGGRA register
Output value is unchanged even if a compare match is generated with the following:
Value set in TRGGRA register = Value set in TRGGRB register

Figure 9 - 25 Operation Example (2) in PWM Mode

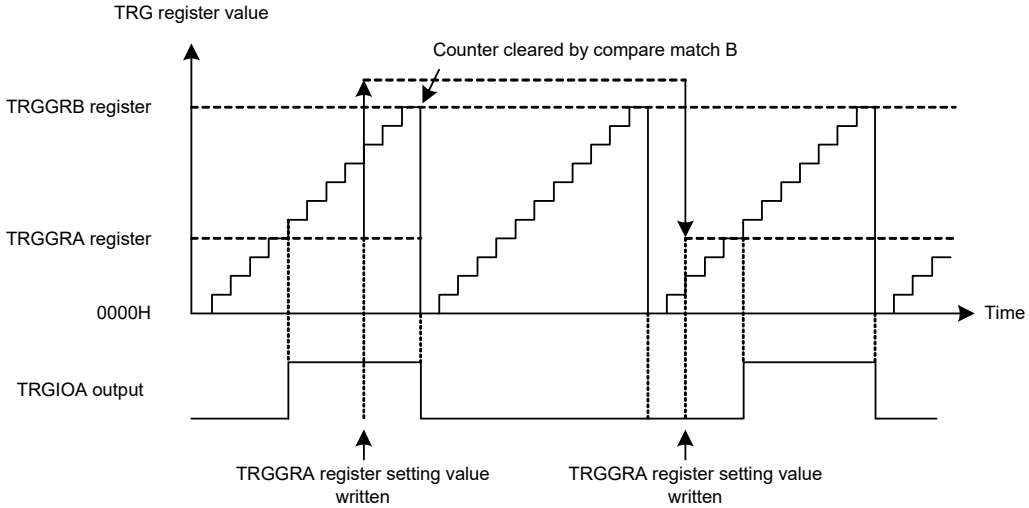

(a) Duty cycle 0%

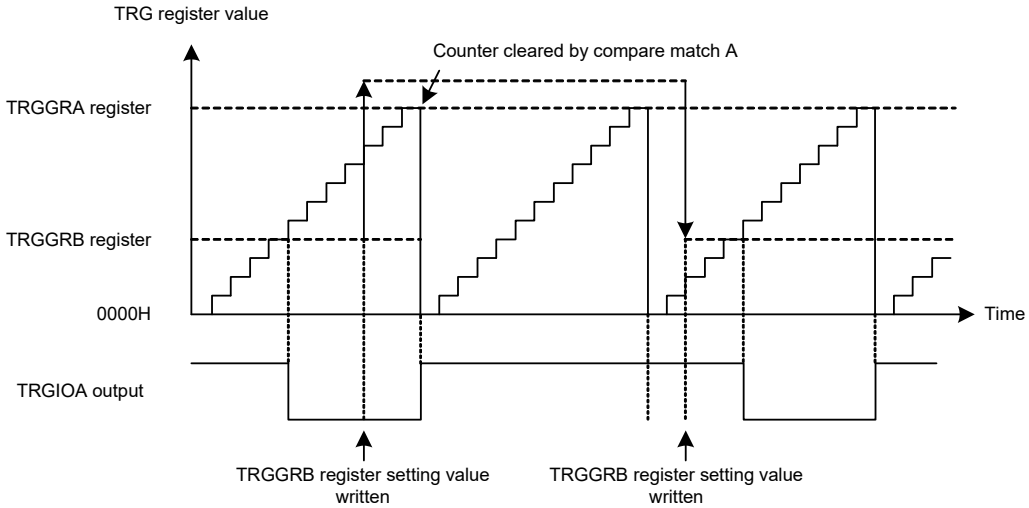

(b) Duty cycle 100%

9.4.5 Phase Counting Mode

In phase counting mode, a phase difference between external input signals from two pins TRGCLKA and TRGCLKB is detected and the TRG register is incremented/decremented.

When phase counting mode is set when bits PM00 and PM01 in the PM0 register are 1, regardless of the settings of bits TRGTCK0 to TRGTCK2 and bits TRGCKEG0 and TRGCKEG1 in the TRGCR register, pins TRGCLKA and TRGCLKB automatically function as external clock input pins and the TRG register is incremented/decremented by bits CNTEN0 to CNTEN7 in the TRGCNTC register. However, bits TRGCCLR0 and TRGCCLR1 in the TRGCR register and registers TRGIOR, TRGIER, TRGSR, TRGGRA, and TRGGRB are enabled. This allows the input capture/output compare functions, PWM output function, and interrupt sources to be used.

The TRG register operates counting at both the rising/falling edges of pins TRGCLKA and TRGCLKB by bits CNTEN0 to CNTEN7.

Table 9 - 14 lists the Phase Counting Mode Specifications and Table 9 - 15 lists the Increment/Decrement Conditions for TRG Register.

Table 9 - 14 Phase Counting Mode Specifications

Item	Specification
Count source	External signal input to the TRGCLKj pin
Count operations	Increment/decrement
Count start condition	1 (count starts) is written to the TRGSTART bit in the TRGMR register.
Count stop condition	0 (count stops) is written to the TRGSTART bit in the TRGMR register.
Interrupt request generation timing	• Input capture (active edge of TRGIOj input) • Compare match (contents of registers TRG and TRGGRj match) • TRG register overflow • TRG register underflow
TRGIOA pin function	I/O port, input-capture input, output-compare output, or PWM output
TRGIOB pin function	I/O port, input-capture input, or output-compare output
TRGCLKA, TRGCLKB pin function	External clock input
Read from timer	The count value can be read by reading the TRG register.
Write to timer	The TRG register can be written to.
Selectable functions	• Selection of counter increment/decrement conditions Selectable by bits CNTEN0 to CNTEN7 in the TRGCNTC register. • Input capture/output compare functions and PWM function can be used.

Remark j = A or B

Table 9 - 15 Increment/Decrement Conditions for TRG Register

TRGCLKB pin	↑	High	↓	Low	High	↓	Low	↑
TRGCLKA pin	Low	↑	High	↓	↓	Low	↑	High
Bits CNTEN7 to CNTEN0 in TRGCNTC register	CNTEN7	CNTEN6	CNTEN5	CNTEN4	CNTEN3	CNTEN2	CNTEN1	CNTEN0
Count direction Note	+1	+1	+1	+1	-1	-1	-1	-1

Note The count direction when each bit in the TRGCNTC register is 1 (decrement or increment) is shown. When a bit is 0 (disabled), count is not performed.

(1) Procedure Example for Setting Phase Counting Mode

Figure 9 - 26 shows a Procedure Example for Setting Phase Counting Mode.

Figure 9 - 26 Procedure Example for Setting Phase Counting Mode

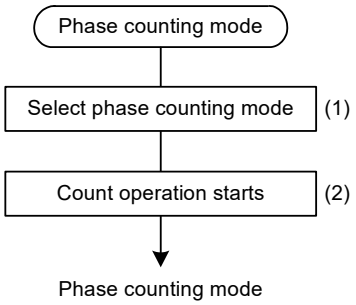

(1) Set the TRGMDF bit in the TRGMR register to 1 to select phase counting mode.

(2) Set the TRGSTART bit in the TRGMR register to 1 to start count operation of the TRG register.

(2) Operation Example

Figures 9 - 27 to 9 - 30 show operation examples in phase counting mode.

In phase counting mode, the TRG register is incremented/decremented at both the rising(↑)/falling(↓) edges of pins TRGCLKA and TRGCLKB by bits CNTEN0 to CNTEN7 in the TRGCNTC register.

Figure 9 - 27 Operation Example 1 in Phase Counting Mode

• When the TRGCNTC register value is FFH

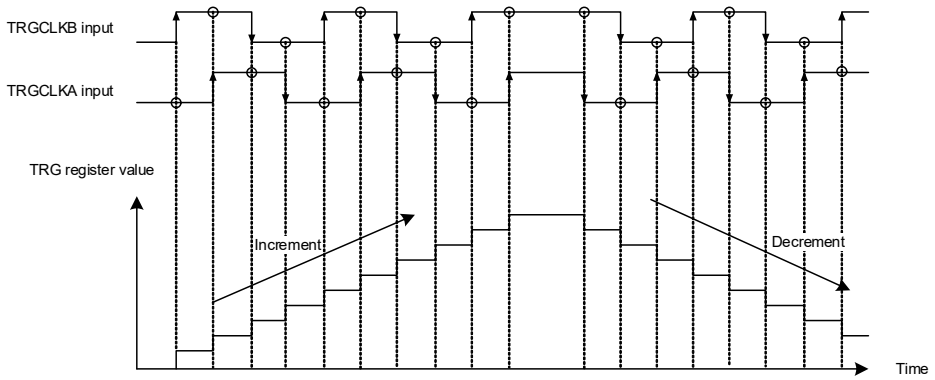

Figure 9 - 28 Operation Example 2 in Phase Counting Mode

• When the TRGCNTC register value is 24H

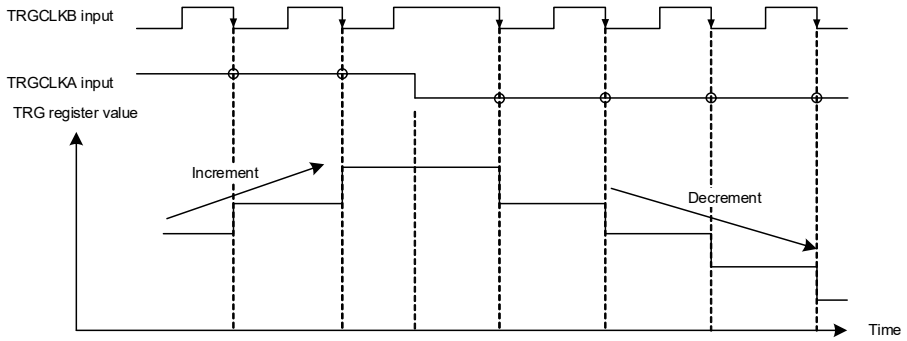

Figure 9 - 29 Operation Example 3 in Phase Counting Mode

• When the TRGCNTC register value is 28H

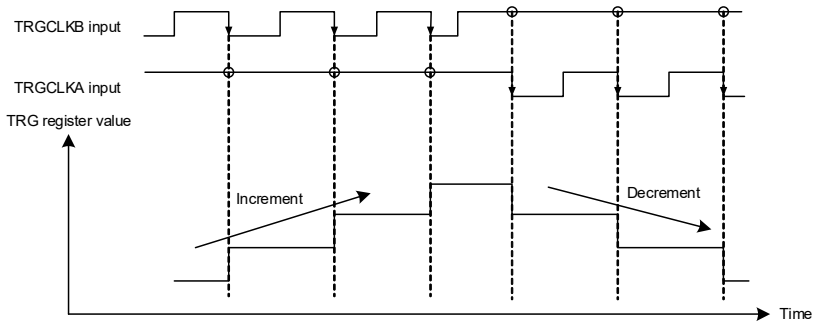

Figure 9 - 30 Operation Example 4 in Phase Counting Mode

• When the TRGCNTC register value is 5AH

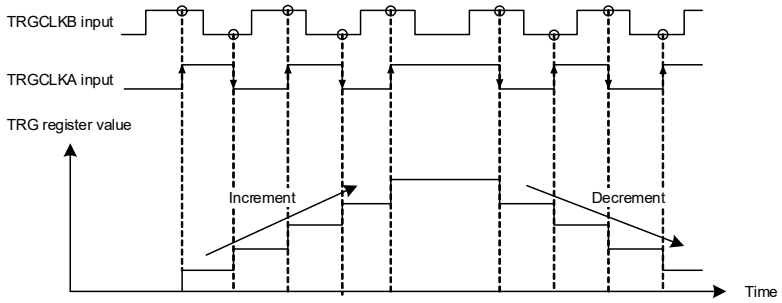

9.5 Timer RG Interrupt

Timer RG generates the timer RG interrupt request from four sources. Table 9 - 16 lists the Registers Associated with Timer RG Interrupt and Figure 9 - 31 shows the Timer RG Interrupt Block Diagram.

Table 9 - 16 Registers Associated with Timer RG Interrupt

	Timer RG Status Register	Timer RG Interrupt Enable Register	Interrupt Request Flag (Register)	Interrupt Mask Flag (Register)	Priority Specification Flag (Register)
Timer RG	TRGSR	TRGIER	TRGIF (IF2H)	TRGMK (MK2H)	TRGPR0 (PR02H) TRGPR1 (PR12H)

Figure 9 - 31 Timer RG Interrupt Block Diagram

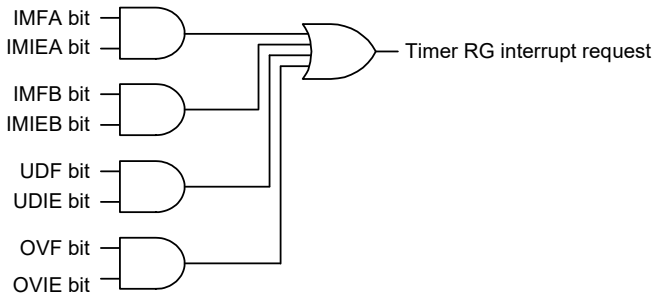

IMFA, IMFB, UDF, OVF: Bits in TRGSR register
IMIEA, IMIEB, UDIE, OVIE: Bits in TRGSR register

Since the interrupt source (timer RG interrupt) is generated by a combination of multiple interrupt request sources for timer RG, the following differences from other maskable interrupts except timer RD interrupt apply:

- When a bit in the TRGSR register is 1 and the corresponding bit in the TRGIER register is 1 (interrupt enabled), the TRGIF bit in the IF2H register is set to 1 (interrupt requested).
- If multiple bits in the TRGIER register are set to 1, use the TRGSR register to determine the source of the interrupt request.
- Since the bits in the TRGSR register are not automatically set to 0 even if the interrupt is acknowledged, set the corresponding bit to 0 in the interrupt routine.
- When status flags of interrupt sources (applicable status flags) of timer RG are set to 0 and their interrupts are disabled in the timer RG interrupt enable register (TRGIER), use either one of the following methods (a) to (c).

(a) Set 00H (all interrupts disabled) to the TRGIER register and write 0 to applicable status flags.

(b) When there are bits set to 1 (interrupt-enabled) in timer RG interrupt enable register (TRGIER) and status flags of interrupt sources related to their bits are 0, write 0 to applicable status flags.

Example: To clear the TRGIMFB bit to 0 when bits TRGIMIEA and TRGOVIE are set to 1 (interrupt-enabled) and the TRGIMIEB bit is set to 0 (interrupt-disabled).

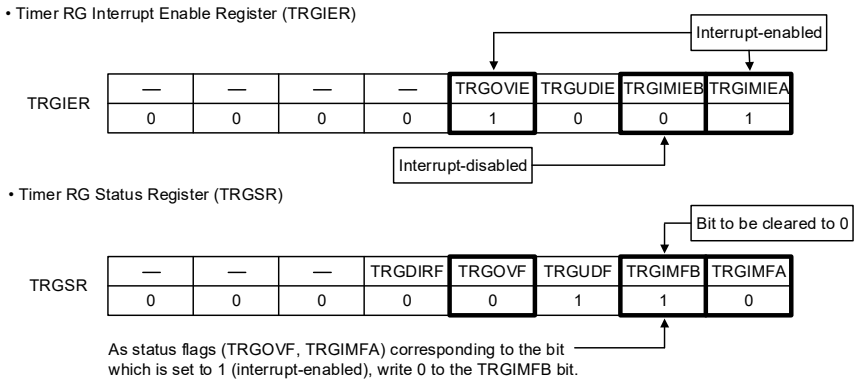

(c) When there are bits set to 1 (interrupt-enabled) in the timer RG interrupt enable register (TRGIER) and status flags of interrupt sources related to their bits are 1, write 0 to these status flags and applicable status flags at the same time.

Example: To clear the TRGIMFB bit to 0 when the TRGIMIEA bit is set to 1 (interrupt-enabled) and the TRGIMIEB bit is set to 0 (interrupt-disabled).

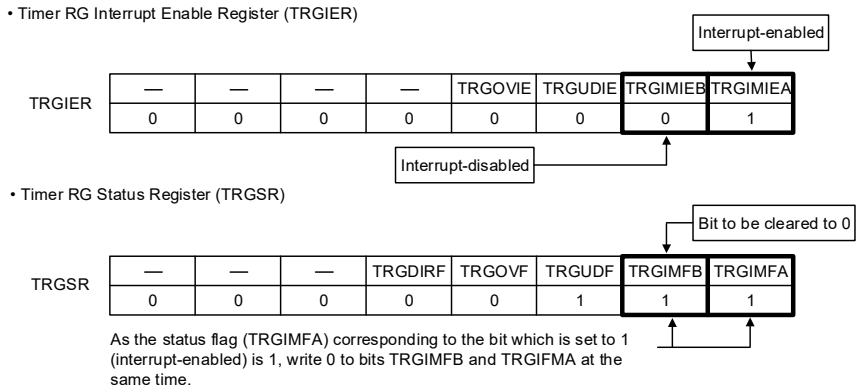

9.6 Cautions for Timer RG

9.6.1 Phase Difference, Overlap, and Pulse Width in Phase Counting Mode

The phase difference and overlap between external input signals from pins TRGCLKA and TRGCLKB should be 1.5 f_{CLK} or more, respectively. The pulse width should be 2.5 f_{CLK} or more.

Figure 9 - 32 shows the Phase Difference, Overlap, and Pulse Width in Phase Counting Mode.

Figure 9 - 32 Phase Difference, Overlap, and Pulse Width in Phase Counting Mode

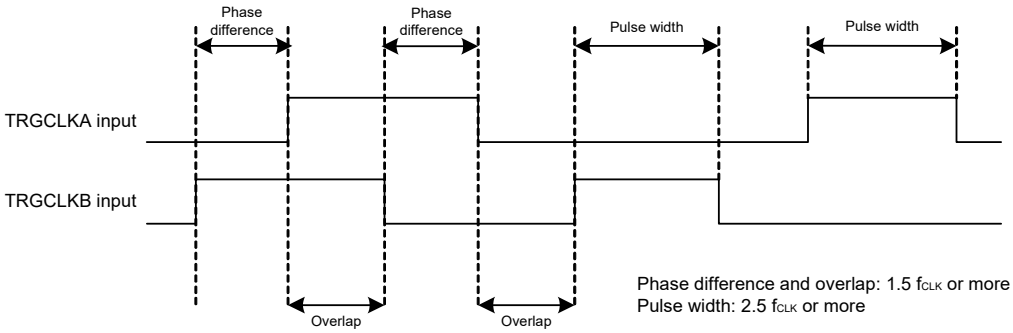

9.6.2 Mode Switching

- When switching modes during operation, set the TRGSTART bit in the TRGMR register to 0 (count stops) before switching.
- After switching modes, set the TRGIF bit to 0 before starting operation.
  Refer to **CHAPTER 24 INTERRUPT FUNCTIONS** for details.

9.6.3 Count Source Switching

- Stop the count before switching the count source Note.

Changing procedure

(1) Set the TRGSTART bit in the TRGMR register to 0 (count stops).

(2) Change bits TRGTCK0 to TRGTCK2 in the TRGCR register.

Note The registers and bits that cannot be rewritten during count operation are as follows:
- All bits except TRGSTART in the TRGMR register
- The TRGCNTC register
- The TRGCR register
- The TRGIOR register

9.6.4 Procedure for Setting Pins TRGIOA and TRGIOB

To output from pins TRGIOA and TRGIOB, use the following setting procedure:

Changing procedure

(1) Set the mode and the initial value/output enabled (in order to make the initial value and enable settings using the same SFRs).

(2) Set the port register bits corresponding to pins TRGIOA and TRGIOB to 0.

(3) Set the port mode register bits corresponding to pins TRGIOA and TRGIOB to output mode (output is started from pins TRGIOA and TRGIOB).

(4) Start the count (TRGSTART in TRGMR register = 1).

To change the port mode register bits corresponding to pins TRGIOA and TRGIOB from output mode to input mode, use the following setting procedure:

(1) Set the port mode register bits corresponding to pins TRGIOA and TRGIOB to input mode (input is started from pins TRGIOA and TRGIOB).

(2) Set to the input capture function.

(3) Start the count (TRGSTART in TRGMR register = 1).

When switching pins TRGIOA and TRGIOB from output mode to input mode, input capture operation may be performed depending on the states of these pins. When the digital filter is not used, edge detection is performed after two or more cycles of the CPU clock have elapsed. When the digital filter is enabled, edge detection is performed after up to five cycles of the digital filter sampling clock.

9.6.5 External Clock TRGCLKA, TRGCLKB

The pulse width of an external clock input to the TRGCLKj pin (j = A or B) should be set to three cycles or more of the timer RG operating clock (f_{CLK}).

9.6.6 SFR Read/Write Access

When setting timer RG, set the TRGEN bit in the PER1 register to 1 first. If the TRGEN bit is 0, writes to the timer RG control registers are ignored and all the read values are the initial values (except for the port registers and the port mode registers).

(1) TRGMR Register

Use the following setting procedure when switching the digital filter clock.

(a) With the TRGSTART bit set to 0 (count stops), set bits TRGDFA and TRGDFB (digital filter function select bits of pins TRGIOA and TRGIOB) in the TRGMR register, and bits TRGDFCK0 and TRGDFCK1 (clock select bits used by digital filter function) in the TRGMR register.

(b) Set the TRGSTART bit to 1.

However, when the digital filter is not set and TRGDFCK1 and TRGDFCK0 = 00B remain unchanged after a reset, the setting can be performed in a single step.

Besides external input pins (TRGIOA and TRGIOB), event input from the ELC can also be selected as an operating source for input capture. To use this function, set the TRGELCICE bit in the TRGMR register to 1, and set the input capture function (the rising edge as the active edge for input capture (TRGIOB2 to TRGIOB0 = 100B)).

This function is disabled in PWM mode and the timer mode output compare function (TRGPWM = 1 and TRGIOB2 = 0).

(2) TRG Register

- Writing to the TRGMR register has priority over count reset operations generated by timer RG operating conditions.

9.6.7 Input Capture Operation when Count is Stopped

In input capture mode, an input capture interrupt request for the active edge of the TRGIOj input is also generated when the TRGSTART bit in the TRGMR register is 0 (count stops) if the edge selected by bits TRGIOj0 and TRGIOj1 in the TRGIOR register is input to the TRGIOj pin (j = A or B).

CHAPTER 10 TIMER RX

10.1 Functions of Timer RX

Timer RX is an input capture timer that counts, triggered by a software trigger or comparator 1 and timer RD.

Timer RX operates as follows:

- Count start operation: Counting is started by a trigger from timer RD or software.
- Count stop operation: Counting is stopped by a trigger from comparator 1 or software.
- Input capture operation: The count value is transferred to a buffer when an interrupt is generated by comparator 1.
- Count reset operation: Counting is reset by a trigger from timer RD or comparator 1.

Timer RX operates on clock f_{CLK} or f_{HOCO}.

10.2 Configuration of Timer RX

Figure 10 - 1 shows the block diagram of timer RX.

Figure 10 - 1 Block Diagram of Timer RX

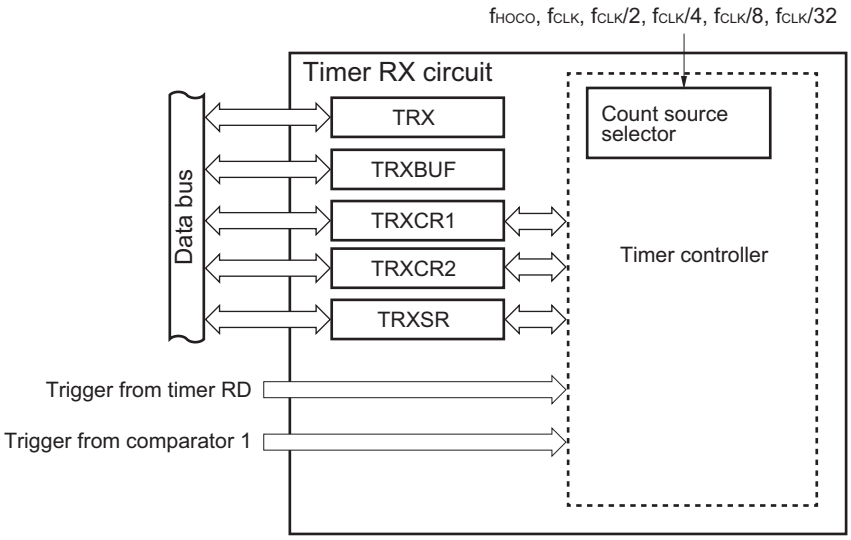

10.3 Registers That Control Timer RX

Table 10 - 1 shows the registers that control timer RX.

Table 10 - 1 Registers That Control Timer RX

Register Name	Symbol
Peripheral enable register 1	PER1
Timer RX count register	TRX
Timer RX count buffer register	TRXBUF
Timer RX function control register 1	TRXCR1
Timer RX function control register 2	TRXCR2
Timer RX status register	TRXSR

10.3.1 Peripheral enable register 1 (PER1)

The PER1 register is used to enable or disable clock supply to each peripheral hardware unit. Clock supply to a hardware unit that is not used can be stopped so as to reduce power consumption and noise.

When using timer RX, be sure to set the TRXEN bit of this register to 1.

The PER1 register is set by a 1-bit or 8-bit memory manipulation instruction.

Reset signal generation clears this register to 00H.

Figure 10 - 2 Format of Peripheral Enable Register 1 (PER1)

Address: F007AH After reset: 00H R/W

Symbol	7	6	5	4	3	2	1	0
PER1	DACEN	TRGEN	PGACMPEN	TRD0EN	DTCEN	PWMOPEN	TRXEN	TRJ0EN

TRXEN	Control of timer RX input clock supply
0	Stops input clock supply. • SFR used by timer RX cannot be written. • Timer RX is in the reset status.
1	Enables input clock supply. • SFR used by timer RX can be read and written.

Caution 1. Be sure to set TRXEN to 1 before setting timer RX. If TRXEN = 0, writing to the control registers of timer RX is ignored and only the default value is read.

Caution 2. To select f_{HOCO} as the count source for timer RX, set f_{CLK} to f_{IH} before setting the TRXEN bit of the PER1 register. To change f_{CLK} to a clock other than f_{IH}, clear the TRXEN bit of the PER1 register before making the change.

10.3.2 Timer RX counter (TRX)

Figure 10 - 3 Format of Timer RX Counter (TRX)

Address: F0350H After reset: 0000H R/W

Symbol	15	14	13	12	11	10	9	8	7	6	5	4	3	2	1	0
TRX																

—	Function	Settable range
Bits 15 to 0	These bits count up the count source. If counting overflows, the TRXOVF bit of the TRXSR register is set to 1.	0000H to FFFFH

Caution If FRQSEL4 of the option byte (000C2H/010C2H) is 1 and TRXEN of the PER1 register is 0, the value of this register is undefined after a reset. If it is necessary to read the default value, set f_{CLK} to f_{IH} and set TRXEN to 1 before reading the value.

10.3.3 Timer RX count buffer counter (TRXBUF)

Figure 10 - 4 Format of Timer RX Count Buffer Counter (TRXBUF)

Address: F0352H After reset: 0000H R

Symbol	15	14	13	12	11	10	9	8	7	6	5	4	3	2	1	0
TRXBUF																

—	Function	Settable range
Bits 15 to 0	Buffer register of TRX register The value of the TRX register is transferred to the buffer register when an interrupt trigger is generated from comparator 1.	0000H to FFFFH

Caution If FRQSEL4 of the option byte (000C2H/010C2H) is 1 and TRXEN of the PER1 register is 0, the value of this register is undefined after a reset. If it is necessary to read the default value, set f_{CLK} to f_{IH} and set TRXEN to 1 before reading the value.

10.3.4 Timer RX function control register 1 (TRXCR1)

Figure 10 - 5 Format of Timer RX Function Control Register 1 (TRXCR1)

Address: F0354H After reset: 00H R/W

Symbol	7	6	5	4	3	2	1	0
TRXCR1	TCK2	TCK1	TCK0	START_MD	TRIG_MD _SW	TRIG_MD _HW	TRD_TRIG	OVIE

TCK2	TCK1	TCK0	Selects count source[Note]
0	0	0	f_{CLK}, f_{HOCO} Note 1
0	0	1	$f_{CLK}/2$ Note 2
0	1	0	$f_{CLK}/4$ Note 2
0	1	1	$f_{CLK}/8$ Note 2
1	0	0	$f_{CLK}/32$ Note 2
Other than above			Setting prohibited

START_MD	Selects count start source
0	Starts counting of timer RX by software.
1	Starts counting of timer RX by using a signal from timer RD as a trigger.
When START_MD = 1, counting is started when the TSTART bit of the TRXCR2 register is set to 1.	

TRIG_MD _SW	Signal for enabling timer RX reset by software
0	Disables resetting of the timer RX counter by software.
1	Enables resetting of the timer RX counter by software.
This setting is invalid when the START_MD bit is 1.	

TRIG_MD _HW	Selects operation in a count mode selected by a trigger from timer RD
0	Starts counting after resetting the timer RX counter.
1	Starts counting by the timer RX counter.
Selects the operation to be performed when starting counting by the timer RX counter based on a trigger from timer RD. This setting is invalid when the START_MD bit is 0.	

TRD_TRIG	Selects a hardware start trigger from timer RD
0	Start counting of timer RX by using count start of timer RD0 (set the TSTART0 bit to 1) as a trigger.
1	Start counting of timer RX by using count start of timer RD1 (set the TSTART1 bit to 1) as a trigger.
This setting is invalid when the START_MD bit is 0.	

OVIE	Enables overflow interrupt
0	Disables the interrupt generated when the TRX register overflows.
1	Enables the interrupt generated when the TRX register overflows.

Note When timer RX operates in coordination with timer RD, select the count source of timer RX to have the same frequency as the count source of timer RD.

Note 1. f_{CLK} is selected when FRQSEL4 = 0 and f_{HOCO} is selected when FRQSEL4 = 1 in the user option byte (000C2H/010C2H). When selecting f_{HOCO} as the count source for timer RD, set f_{CLK} to f_{IH} before setting bit 4 (TRD0EN) in peripheral enable register 1 (PER1). When changing f_{CLK} to a clock other than f_{IH}, clear bit 4 (TRD0EN) in peripheral enable register 1 (PER1) before changing.

Note 2. Do not set this value when FRQSEL4 = 1 in the user option byte (000C2H/010C2H).

Caution **If FRQSEL4 of the option byte (000C2H/010C2H) is 1 and TRXEN of the PER1 register is 0, the value of this register is undefined after a reset. If it is necessary to read the default value, set f_{CLK} to f_{IH} and set TRXEN to 1 before reading the value.**

10.3.5 Timer RX function control register 2 (TRXCR2)

Figure 10 - 6 Format of Timer RX Function Control Register 2 (TRXCR2)

Address: F0355H After reset: 00H R/W

Symbol	7	6	5	4	3	2	1	0
TRXCR2	0	0	0	0	0	CMP1_TCR1	CMP1_TCR0	TSTART

CMP1_TCR1	CMP1_TCR0	Selects operation to be performed when a trigger is generated from comparator 1
0	0	Counting by the timer RX counter is stopped.
0	1	The count value of the timer RX counter is transferred to the timer RX count buffer register. Counting by the timer RX counter is continued.
1	0	The count value of timer RX is reset to 0000H and counting is continued.
1	1	The count value of the timer RX counter is transferred to the timer RX count buffer register. The count value of timer RX is reset to 0000H and counting is continued.

TSTART	Controls start of operation of timer RX[Note]
0	Stops TRX counting.
1	Starts TRX counting.

Note When a stop signal from comparator 1 conflicts with manipulation of the TSTART bit, the stop signal from comparator 1 takes precedence.

Caution **If FRQSEL4 of the option byte (000C2H/010C2H) is 1 and TRXEN of the PER1 register is 0, the value of this register is undefined after a reset. If it is necessary to read the default value, set f_{CLK} to f_{IH} and set TRXEN to 1 before reading the value.**

10.3.6 Timer RX status register (TRXSR)

Figure 10 - 7 Format of Timer RX Status Register (TRXSR)

Address: F0356H After reset: 00H R/W

Symbol	7	6	5	4	3	2	1	0
TRXSR	0	0	0	0	0	0	TRXSB	TRXOVF

TRXSB	Timer RX counter status flag[Note 1]
0	Counting is stopped.
1	Counting is in progress.

TRXOVF	Overflow status of timer RX counter[Notes 2, 3]
0	Overflow has not occurred.
1	Overflow has occurred.

Note 1. Only reading is enabled. Writing is disabled.

Note 2. If 0 is written to the TRXOVF bit, the TRXOVF bit becomes 0. However, even though 1 is written to the TRXOVF bit, the bit value does not change.

Note 3. If the timer RX counter overflows and 0 is written to TRXOVF at the same time, the overflow takes precedence.

Caution **If FRQSEL4 of the option byte (000C2H/010C2H) is 1 and TRXEN of the PER1 register is 0, the value of this register is undefined after a reset. If it is necessary to read the default value, set f_{CLK} to f_{IH} and set TRXEN to 1 before reading the value.**

10.4 Operation of Timer RX

Timer RX starts counting using a signal from timer RD as the trigger and stops counting using a signal from comparator 1 as the trigger.

10.4.1 Count source

The operating clock of timer RX is selected by the option byte and frequency divider of timer RX.

(1) Count source of timer RX

- If FRQSEL4 of the option byte (000C2H/010C2H) is set to 1 and the high-speed on-chip oscillator clock (f_{HOCO}) is selected for the CPU/peripheral hardware clock frequency (f_{CPU}), the count source of timer RX is the high-speed on-chip oscillator clock (f_{HOCO}).
- If FRQSEL4 of the option byte (000C2H/010C2H) is cleared to 0 or the high-speed system clock (f_{MX}) is selected for the CPU/peripheral hardware clock frequency (f_{CPU}), the count source of timer RX is the CPU/peripheral hardware clock frequency (f_{CPU}).

(2) Count source of timer RX

A frequency selected with the TRXCR1 register is used.

When counting by the timer RX counter is started by a signal from timer RD, select the count source of timer RX to have the same frequency as the count source of timer RD.

10.4.2 Starting timer RX counting

Counting by timer RX can be started by a trigger from timer RD or software.

10.4.2.1 Setting and operation when trigger from timer RD is selected

(1) Setting procedure for resetting the timer RX count and starting counting (TRIG_MD_HW = 0)

1. Select a trigger from timer RD as a count start source: TRXCR1.START_MD = 1
2. Select the trigger function of timer RX: TRXCR1.TRIG_MD_HW = 0
3. Select a trigger signal from timer RD_0/1: TRXCR1.TRD_TRIG = 1/0
4. Set timer RX to start counting: TRXCR2.TSTART = 1

Figure 10 - 8 Operation example of resetting the timer RX count and starting counting (TRIG_MD_HW = 0)

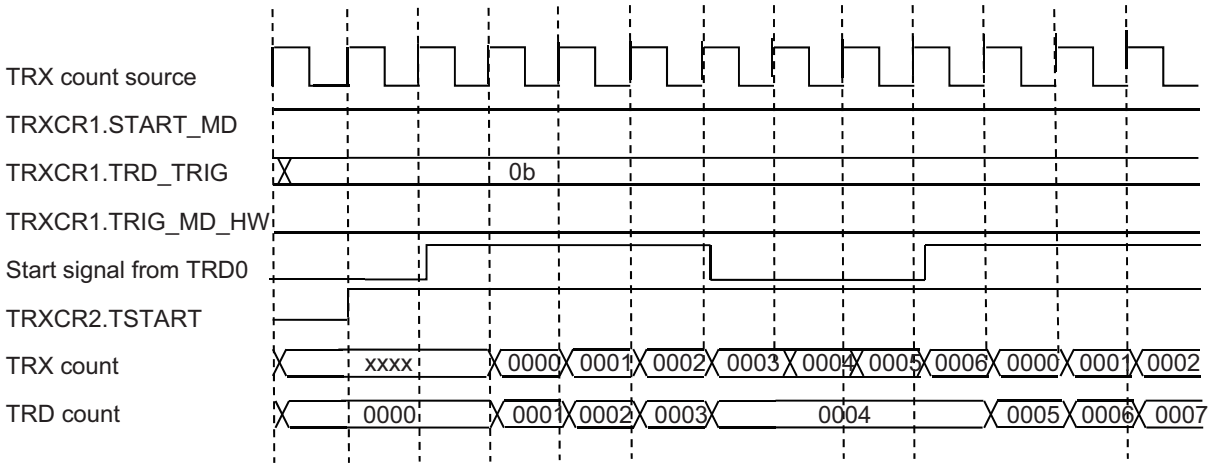

(2) Setting procedure for starting timer RX counting (TRIG_MD_HW = 1)

1. Select a trigger from timer RD as a count start source: RXCR1.START_MD = 1
2. Select the trigger function of timer RX: TRXCR1.TRIG_MD_HW = 1
3. Select a trigger signal from timer RD_0/1: TRXCR1.TRD_TRIG = 1/0
4. Set timer RX to start counting: TRXCR2.TSTART = 1

Figure 10 - 9 Operation example of starting timer RX counting (TRIG_MD_HW = 1)

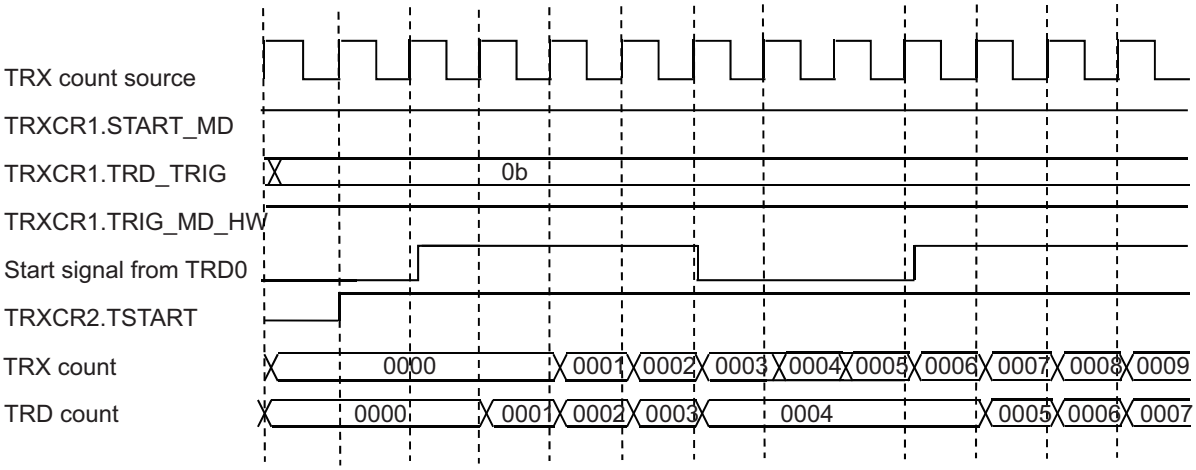

10.4.2.2 Setting and operation when software trigger is selected

1. Select software as a count start source: TRXCR1.START_MD = 0
2. Set timer RX to start counting: TRXCR2.TSTART = 1

Figure 10 - 10 Operation example of starting timer RX counting by software

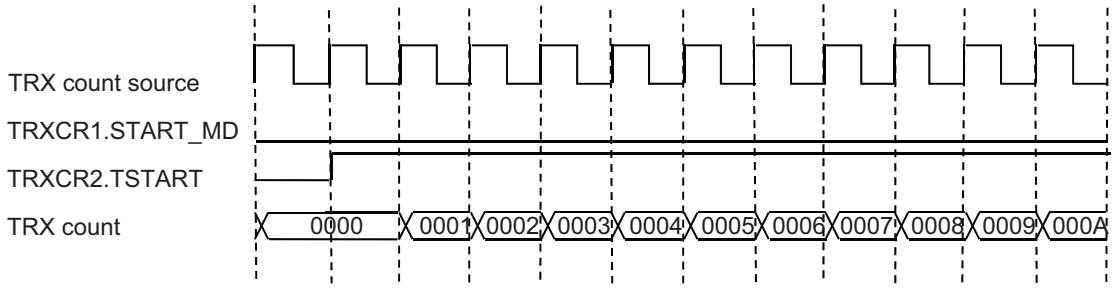

10.4.3 Stopping timer RX counting

Timer RX can be stopped, while it is counting (which has been started by hardware or software), by a trigger from comparator 1 or software.

10.4.3.1 Setting and operation when trigger from comparator 1 is selected

1. Select the trigger function of comparator 1: TRXCR2.CMP1_TCR = 00 (Select the stop function.)
2. Start timer RX to count: TRXCR2.TSTART = 1

Figure 10 - 11 Operation example of stopping timer RX counting by a trigger from comparator 1

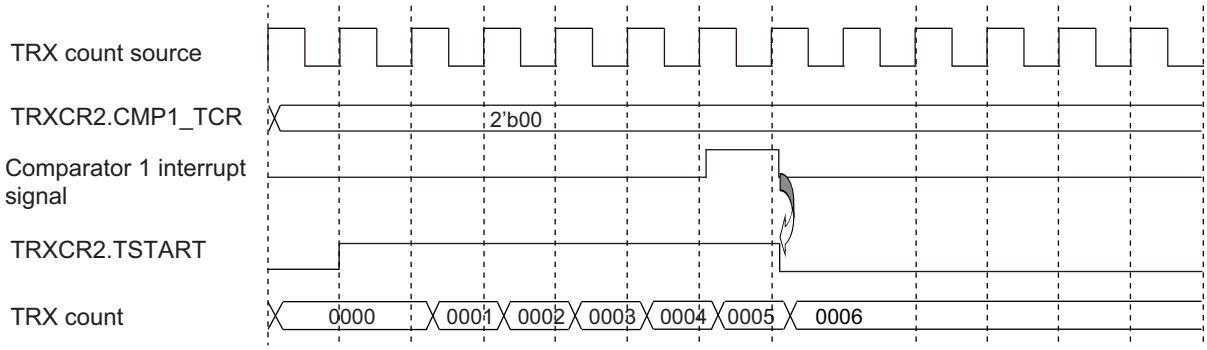

10.4.3.2 Setting and operation when software trigger is selected

1. Select starting timer RX to count: TRXCR2.TSTART = 0
2. Write 0 to the TRXCR2.TSTART bit by software to stop timer RX counting.

10.4.4 Input capture operation

If an interrupt signal is sent from comparator 1 while timer RX is counting, the timer RX counting operation will change.

(1) Case 1:

The count value of timer RX is transferred to the count buffer by the setting of TRXCR2.CMP1_TCR = 01.

- TRXCR2.CMP1_TCR = 01 (Select the input capture function for counting.)
- TRXCR2.TSTART = 1 (Select to start timer RX counting.)

Figure 10 - 12 Operation example of input capture

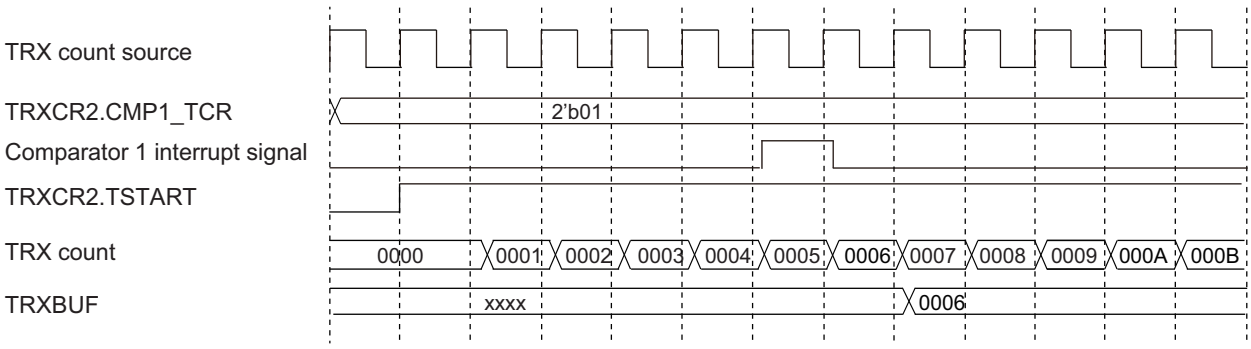

(2) Case 2:

The count value of timer RX is transferred to the count buffer and the count value of timer RX is reset by the setting of TRXCR2.CMP1_TCR = 11.

- TRXCR2.CMP1_TCR = 11 (Select the input capture function and reset function for counting.)
- TRXCR2.TSTART = 1 (Select to start timer RX counting.)

Figure 10 - 13 Operation example of input capture (to reset count value at the same time)

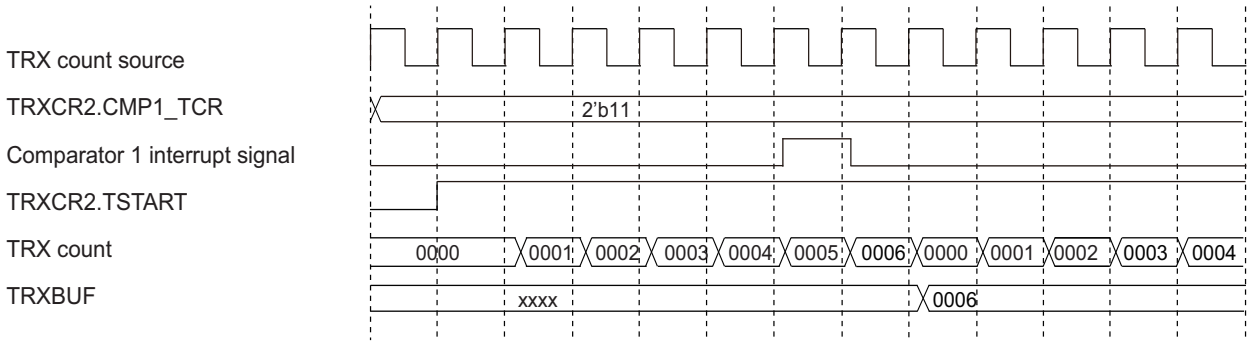

10.4.5 Resetting timer RX count

Resetting the count register can be controlled by a trigger from timer RD or comparator 1 if starting of timer RX counting has been selected by software.

(1) TRIG_MD_SW = 0: The count value is not reset by a trigger from timer RD when counting has been started by software.

1. Select software as a count start source: TRXCR1.START_MD = 0
2. Enable software to reset counting: TRXCR1.TRIG_MD_SW = 0
3. Start timer RX counting: TRXCR2.TSTART = 1

Figure 10 - 14 Operation example of resetting the count value by a trigger from timer RD

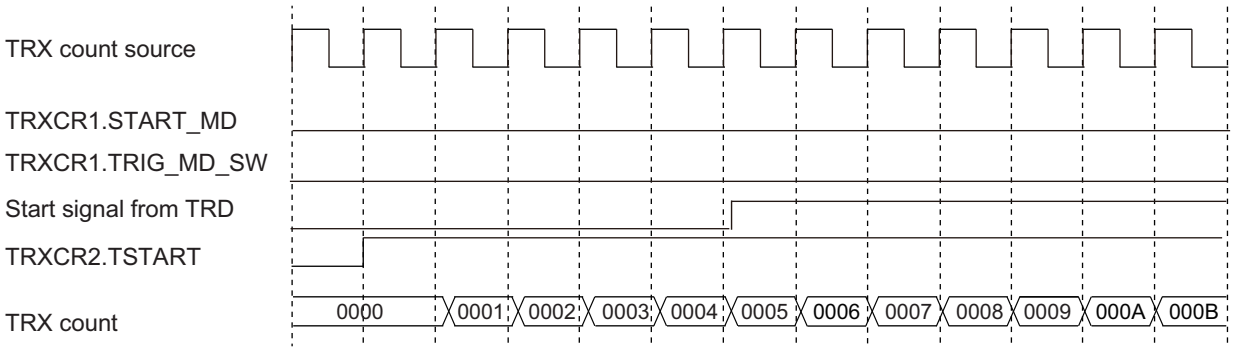

(2) TRIG_MD_SW = 1: The count value is reset by a trigger from timer RD when counting has been started by software.

1. Select software as a count start source: TRXCR1.START_MD = 0
2. Enable software to reset counting: TRXCR1.TRIG_MD_SW = 1
3. Start timer RX counting: TRXCR2.TSTART = 1

Figure 10 - 15 Operation example of resetting the count value by a trigger from timer RD

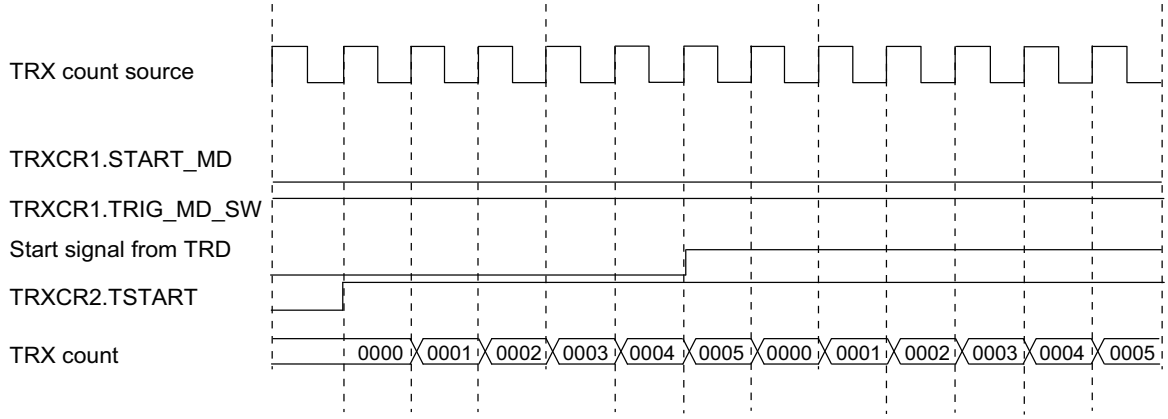

(3) The count value of timer RX is reset by a trigger from comparator 1 by the setting of TRXCR2.CMP1_TCR = 10.

1. Reset the count value and continue counting: TRXCR2.CMP1_TCR = 10 (The input capture function cannot be used.)
2. Start timer RX counting: TRXCR2.TSTART = 1

Figure 10 - 16 Operation example of resetting the count value by a trigger from comparator 1

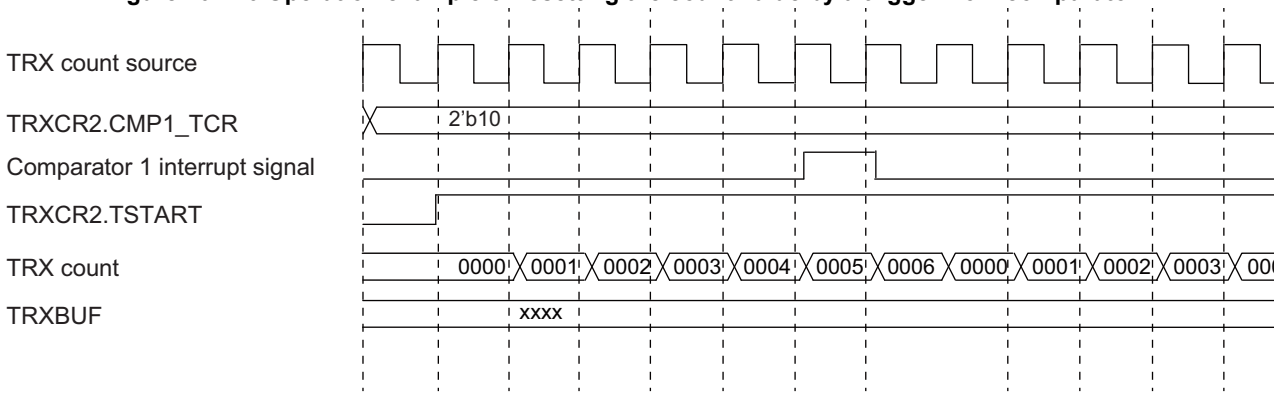

10.4.6 Timer RX interrupt operation

An overflow interrupt signal can be generated when the counter of timer RX overflows while TRXCR1.OVIE = 1.

Figure 10 - 17 Operation example of generating a timer RX count overflow interrupt

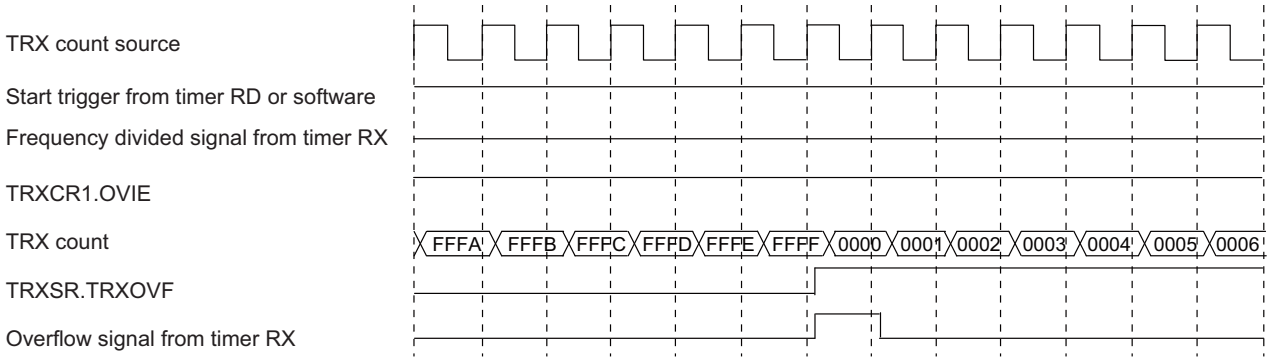

10.5 Notes on Using Timer RX

10.5.1 SFR read/write access

To set timer RX, be sure to set the TRXEN bit of the PER1 register to 1 first. If this bit is 0, writing to the control registers of timer RX is ignored and only the default values are read.
While clock supply is stopped, the TRX and TRXBUF registers cannot be written to. The other registers related to timer RX can be read from or written to.

Caution Writing to the following registers is prohibited during the counting operation.
• TRXCR1
• TRXCR2

10.5.2 Overflow interrupt

When the count value of timer RX is FFFFH, if the count value is reset by an external trigger signal before the count value could be set to 0000H by an overflow, an overflow interrupt is not generated.

10.5.3 Input capture and timer RX count reset operations

The input capture operation that is started by a signal from timer RD or comparator 1 and the timer RX count reset operation are performed even when the TRXSB bit of the TRXSR register is 0 (when counting is stopped).

Caution When the count value of timer RX becomes FFFFH while timer RX is counting, an overflow interrupt of timer RX is not generated if the count value is reset by an external trigger signal.

10.5.4 Coordination between timer RX and timer RD or comparator 1

For timer RX to operate in coordination with timer RD or comparator 1, the following setting procedure should be performed.

1. Start clock supply to comparator 1: PGACMPEN = 1
2. Enable comparator 1 interrupt and output: For details, see the setting procedure for comparator-related registers.
3. Start clock supply to timer RX: TRXEN = 1
4. Set the TRXCR1 register.
5. Set the TRXCR2 register.
6. After setting SFR related to timer RD, start counting by timer RD: TRDOEN = 1
7. Start counting by timer RX: TRXCR2.START = 1

Remark 1. When using timer RX together with timer RD or comparator 1, select the count source of timer RX to have the same frequency as the count source of timer RD.
Remark 2. Set control register TRXCR1 first and then TRXCR2.TSTART, in that order.

CHAPTER 11 REAL-TIME CLOCK

11.1 Functions of Real-time Clock

The real-time clock has the following features.

- Having counters of year, month, week, day, hour, minute, and second, and can count up to 99 years.
- Constant-period interrupt function (period: 0.5 seconds, 1 second, 1 minute, 1 hour, 1 day, 1 month)
- Alarm interrupt function (alarm: week, hour, minute)
- Pin output function of 1 Hz (36, 48, and 64-pin products only)

The real-time clock interrupt signal (INTRTC) can be utilized for wakeup from STOP mode and triggering an A/D converter's SNOOZE mode.

Caution The count of year, month, week, day, hour, minutes and second can only be performed when a subsystem clock (f_{SUB} = 32.768 kHz) is selected as the operation clock of the real-time clock. When the low-speed oscillation clock (f_{IL} = 15 kHz) is selected, only the constant-period interrupt function is available. The 24- and 32-pin products have the constant-period interrupt function only, because these products have no subsystem clock.
However, the constant-period interrupt interval when f_{IL} is selected will be calculated with the constant-period (the value selected with RTCC0 register) × f_{SUB}/f_{IL}.

11.2 Configuration of Real-time Clock

The real-time clock includes the following hardware.

Table 11 - 1 Configuration of Real-time Clock

Item	Configuration
Counter	Internal counter (16-bit)
Control registers	Peripheral enable register 0 (PER0)
	Subsystem clock supply mode control register (OSMC)
	Real-time clock control register 0 (RTCC0)
	Real-time clock control register 1 (RTCC1)
	Second count register (SEC)
	Minute count register (MIN)
	Hour count register (HOUR)
	Day count register (DAY)
	Week count register (WEEK)
	Month count register (MONTH)
	Year count register (YEAR)
	Watch error correction register (SUBCUD)
	Alarm minute register (ALARMWM)
	Alarm hour register (ALARMWH)
	Alarm week register (ALARMWW)

Figure 11 - 1 Block Diagram of Real-time Clock

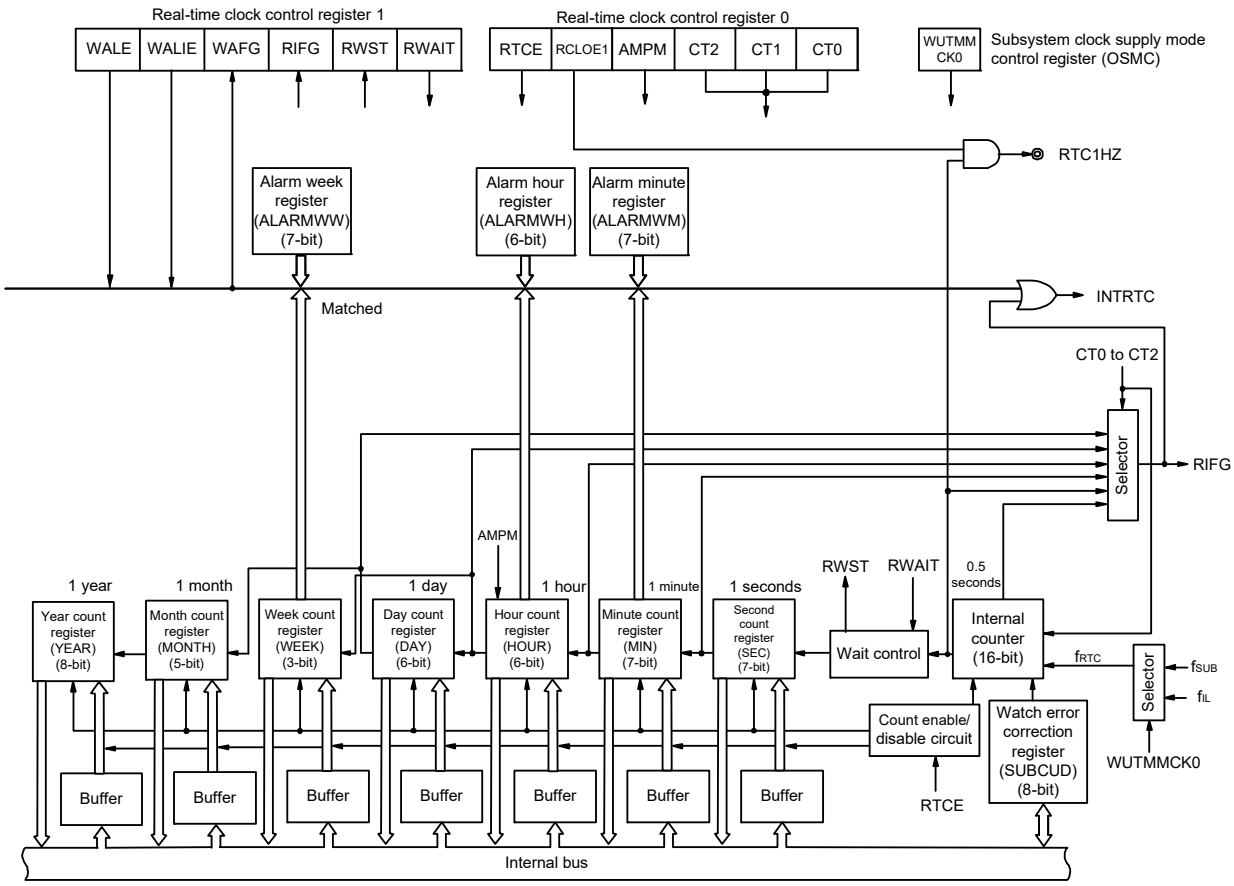

Caution **The count of year, month, week, day, hour, minutes and second can only be performed when a subsystem clock (f_{SUB} = 32.768 kHz) is selected as the operation clock of the real-time clock.**
When the low-speed oscillation clock (f_{IL} = 15 kHz) is selected, only the constant-period interrupt function is available. The 24- and 32-pin products have the constant-period interrupt function only, because these products have no subsystem clock.
However, the constant-period interrupt interval when f_{IL} is selected will be calculated with the constant-period (the value selected with RTCC0 register) × f_{SUB}/f_{IL}.

11.3 Registers Controlling Real-time Clock

The real-time clock is controlled by the following registers.

- Peripheral enable register 0 (PER0)
- Subsystem clock supply mode control register (OSMC)
- Real-time clock control register 0 (RTCC0)
- Real-time clock control register 1 (RTCC1)
- Second count register (SEC)
- Minute count register (MIN)
- Hour count register (HOUR)
- Day count register (DAY)
- Week count register (WEEK)
- Month count register (MONTH)
- Year count register (YEAR)
- Watch error correction register (SUBCUD)
- Alarm minute register (ALARMWM)
- Alarm hour register (ALARMWH)
- Alarm week register (ALARMWW)
- Port mode register 3 (PM3)
- Port register 3 (P3)

11.3.1 Peripheral enable register 0 (PER0)

This register is used to enable or disable supplying the clock to the peripheral hardware. Clock supply to a hardware macro that is not used is stopped in order to reduce the power consumption and noise.

When the real-time clock is used, be sure to set bit 7 (RTCEN) of this register to 1.

The PER0 register can be set by a 1-bit or 8-bit memory manipulation instruction.

Reset signal generation clears this register to 00H.

Figure 11 - 2 Format of Peripheral enable register 0 (PER0)

Address: F00F0H After reset: 00H R/W

Symbol	7	6	5	4	3	2	1	0
PER0	RTCEN	IRDAEN	ADCEN	IICA0EN	SAU1EN	SAU0EN	0	TAU0EN

RTCEN	Control of real-time clock (RTC) and 12-bit interval timer input clock supply
0	Stops input clock supply. • SFR used by the real-time clock (RTC) and 12-bit interval timer cannot be written. • The real-time clock (RTC) and 12-bit interval timer are in the reset status.
1	Input clock supply. • SFR used by the real-time clock (RTC) and 12-bit interval timer can be read/written.

Caution 1. When using the real-time clock, first set the RTCEN bit to 1 and then set the following registers, while oscillation of the count clock (f_{RTC}) is stable. If RTCEN = 0, writing to the control registers of the real-time clock is ignored, and, even if the registers are read, only the default values are read (except for the subsystem clock supply mode control register (OSMC), port mode register 3 (PM3), port register 3 (P3)).

- **Real-time clock control register 0 (RTCC0)**
- **Real-time clock control register 1 (RTCC1)**
- **Second count register (SEC)**
- **Minute count register (MIN)**
- **Hour count register (HOUR)**
- **Day count register (DAY)**
- **Week count register (WEEK)**
- **Month count register (MONTH)**
- **Year count register (YEAR)**
- **Watch error correction register (SUBCUD)**
- **Alarm minute register (ALARMWM)**
- **Alarm hour register (ALARMWH)**
- **Alarm week register (ALARMWW)**

Caution 2. Subsystem clock supply to peripheral functions other than the real-time clock and 12-bit interval timer can be stopped in STOP mode or HALT mode when the subsystem clock is used, by setting the RTCLPC bit of the subsystem clock supply mode control register (OSMC) to 1.

Caution 3. Be sure to clear bit 1 to "0".

11.3.2 Subsystem clock supply mode control register (OSMC)

The WUTMMCK0 bit can be used to select the real-time clock count clock (f_{RTC}).

In addition, by stopping clock functions that are unnecessary, the RTCLPC bit can be used to reduce power consumption. For details about setting the RTCLPC bit, see **CHAPTER 5 CLOCK GENERATOR**.

The OSMC register can be set by an 8-bit memory manipulation instruction.

Reset signal generation clears this register to 00H.

Figure 11 - 3 Format of Subsystem clock supply mode control register (OSMC)

Address: F00F3H After reset: 00H R/W

Symbol	7	6	5	4	3	2	1	0
OSMC	RTCLPC	0	0	WUTMMCK0	0	0	0	0

WUTMMCK0	Selection of count clock (f_{RTC}) for real-time clock, 12-bit interval timer, and timer RJ operation clock
0	Subsystem clock (f_{SUB}) • The subsystem clock is selected as the count clock for the real-time clock and the 12-bit interval timer. • The low-speed on-chip oscillator cannot be selected as the count source for timer RJ.
1	Low-speed on-chip oscillator clock (f_{IL}) • The low-speed on-chip oscillator clock is selected as the count clock for the real-time clock and the 12-bit interval timer. • Either the low-speed on-chip oscillator or the subsystem clock can be selected as the count source for timer RJ.

Caution The count of year, month, week, day, hour, minutes and second can only be performed when a subsystem clock (f_{SUB} = 32.768 kHz) is selected as the operation clock of the real-time clock. When the low-speed oscillation clock (f_{IL} = 15 kHz) is selected, only the constant-period interrupt function is available. The 24- and 32-pin products have the constant-period interrupt function only, because these products have no subsystem clock.
However, the constant-period interrupt interval when f_{IL} is selected will be calculated with the constant-period (the value selected with RTCC0 register) × f_{SUB}/f_{IL}.

11.3.3 Real-time clock control register 0 (RTCC0)

The RTCC0 register is an 8-bit register that is used to start or stop the real-time clock operation, control the RTC1HZ pin, and set a 12- or 24-hour system and the constant-period interrupt function.
The RTCC0 register can be set by a 1-bit or 8-bit memory manipulation instruction.
Reset signal generation clears this register to 00H.

Figure 11 - 4 Format of Real-time clock control register 0 (RTCC0)

Address: FFF9DH After reset: 00H R/W

Symbol	7	6	5	4	3	2	1	0
RTCC0	RTCE	0	RCLOE1[Note]	0	AMPM	CT2	CT1	CT0

RTCE	Real-time clock operation control
0	Stops counter operation.
1	Starts counter operation.

RCLOE1[Note]	RTC1HZ pin output control
0	Disables output of the RTC1HZ pin (1 Hz).
1	Enables output of the RTC1HZ pin (1 Hz).

AMPM	Selection of 12-/24-hour system
0	12-hour system (a.m. and p.m. are displayed.)
1	24-hour system

- Rewrite the AMPM bit value after setting the RWAIT bit (bit 0 of real-time clock control register 1 (RTCC1)) to 1. If the AMPM bit value is changed, the values of the hour count register (HOUR) change according to the specified time system.
- Table 11 - 2 shows the Displayed Time Digits.

CT2	CT1	CT0	Constant-period interrupt (INTRTC) selection
0	0	0	Does not use fixed-cycle interrupt function.
0	0	1	Once per 0.5 s (synchronized with second count up)
0	1	0	Once per 1 s (same time as second count up)
0	1	1	Once per 1 m (second 00 of every minute)
1	0	0	Once per 1 hour (minute 00 and second 00 of every hour)
1	0	1	Once per 1 day (hour 00, minute 00, and second 00 of every day)
1	1	×	Once per 1 month (Day 1, hour 00 a.m., minute 00, and second 00 of every month)

When changing the values of the CT2 to CT0 bits while the counter operates (RTCE = 1), rewrite the values of the CT2 to CT0 bits after disabling interrupt servicing INTRTC by using the interrupt mask flag register. Furthermore, after rewriting the values of the CT2 to CT0 bits, enable interrupt servicing after clearing the RIFG and RTCIF flags.

Note Set the RCLOE1 bit to 0 in 24- and 32-pin products.

Caution 1. Do not change the value of the RTCLOE1 bit when RTCE = 1.
Caution 2. 1 Hz is not output even if RCCOE1 is set to 1 when RTCE = 0.

Remark ×: Don't care

11.3.4 Real-time clock control register 1 (RTCC1)

The RTCC1 register is an 8-bit register that is used to control the alarm interrupt function and the wait time of the counter.

The RTCC1 register can be set by a 1-bit or 8-bit memory manipulation instruction.

Reset signal generation clears this register to 00H.

Figure 11 - 5 Format of Real-time clock control register 1 (RTCC1) (1/2)

Address: FFF9EH After reset: 00H R/W

Symbol	7	6	5	4	3	2	1	0
RTCC1	WALE	WALIE	0	WAFG	RIFG	0	RWST	RWAIT

WALE	Alarm operation control
0	Match operation is invalid.
1	Match operation is valid.
When setting a value to the WALE bit while the counter operates (RTCE = 1) and WALIE = 1, rewrite the WALE bit after disabling interrupt servicing INTRTC by using the interrupt mask flag register. Furthermore, clear the WAFG and RTCIF flags after rewriting the WALE bit. When setting each alarm register (WALIE flag of real-time clock control register 1 (RTCC1), the alarm minute register (ALARMWM), the alarm hour register (ALARMWH), and the alarm week register (ALARMWW)), set match operation to be invalid (“0”) for the WALE bit.	

WALIE	Control of alarm interrupt (INTRTC) function operation
0	Does not generate interrupt on matching of alarm.
1	Generates interrupt on matching of alarm.

WAFG	Alarm detection status flag
0	Alarm mismatch
1	Detection of matching of alarm
This is a status flag that indicates detection of matching with the alarm. It is valid only when WALE = 1 and is set to “1” one cycle of f_{RTC} after matching of the alarm is detected. This flag is cleared when “0” is written to it. Writing “1” to it is invalid.	

Figure 11 - 6 Format of Real-time clock control register 1 (RTCC1) (2/2)

RIFG	Constant-period interrupt status flag
0	Fixed-cycle interrupt is not generated.
1	Fixed-cycle interrupt is generated.
This flag indicates the status of generation of the fixed-cycle interrupt. When the fixed-cycle interrupt is generated, it is set to “1”. This flag is cleared when “0” is written to it. Writing “1” to it is invalid.	

RWST	Wait status flag of real-time clock
0	Counter is operating.
1	Mode to read or write counter value
This status flag indicates whether the setting of the RWAIT bit is valid. Before reading or writing the counter value, confirm that the value of this flag is 1.	

RWAIT	Wait control of real-time clock
0	Sets counter operation.
1	Stops SEC to YEAR counters. Mode to read or write counter value
This bit controls the operation of the counter. Be sure to write “1” to it to read or write the counter value. As the internal counter (16-bit) is continuing to run, complete reading or writing within one second and turn back to 0. When reading or writing to the counter is required while generation of the alarm interrupt is enabled, first set the CT2 to CT0 bits to 010B (generating the constant-period interrupt once per 1 second). Then, complete the processing from setting the RWAIT bit to 1 to setting it to 0 before generation of the next constant-period interrupt. <R> When RWAIT = 1, it takes up to one cycle of f_{RTC} until the counter value can be read or written (RWST = 1).[Notes 1, 2] When the internal counter (16-bit) overflowed while RWAIT = 1, it keeps the event of overflow until RWAIT = 0, then counts up. However, when it wrote a value to second count register, it will not keep the overflow event.	

<R> **Note 1.** When the RWAIT bit is set to 1 within one cycle of f_{RTCCK} clock after setting the RTCE bit to 1, the setting of the RWST bit actually becoming 1 may take up to two cycles of the operating clock (f_{RTCCK}).

<R> **Note 2.** When the RWAIT bit is set to 1 within one cycle of f_{RTCCK} clock after release from the standby mode (HALT mode, STOP mode, or SNOOZE mode), the setting of the RWST bit actually becoming 1 may take up to two cycles of the operating clock (f_{RTCCK}).

Caution **If writing is performed to the RTCC1 register with a 1-bit manipulation instruction, the RIFG flag and WAFG flag may be cleared. Therefore, to perform writing to the RTCC1 register, be sure to use an 8-bit manipulation instruction. To prevent the RIFG flag and WAFG flag from being cleared during writing, disable writing by setting 1 to the corresponding bit. If the RIFG flag and WAFG flag are not used and the value may be changed, the RTCC1 register may be written by using a 1-bit manipulation instruction.**

Remark 1. Fixed-cycle interrupts and alarm match interrupts use the same interrupt source (INTRTC). When using these two types of interrupts at the same time, which interrupt occurred can be judged by checking the fixed-cycle interrupt status flag (RIFG) and the alarm detection status flag (WAFG) upon INTRTC occurrence.

Remark 2. The internal counter (16 bits) is cleared when the second count register (SEC) is written.

11.3.5 Second count register (SEC)

The SEC register is an 8-bit register that takes a value of 0 to 59 (decimal) and indicates the count value of seconds.

It counts up when the internal counter (16-bit) overflows.

When data is written to this register, it is written to a buffer and then to the counter up to two cycles of f_{RTC} later.

Set a decimal value of 00 to 59 to this register in BCD code.

The SEC register can be set by an 8-bit memory manipulation instruction.

Reset signal generation clears this register to 00H.

Figure 11 - 7 Format of Second count register (SEC)

Address: FFF92H After reset: 00H R/W

Symbol	7	6	5	4	3	2	1	0
SEC	0	SEC40	SEC20	SEC10	SEC8	SEC4	SEC2	SEC1

Caution **When it reads or writes from/to the register while the counter is in operation (RTCE = 1), follow the procedures described in 11.4.3 Reading/writing real-time clock.**

Remark The internal counter (16 bits) is cleared when the second count register (SEC) is written.

11.3.6 Minute count register (MIN)

The MIN register is an 8-bit register that takes a value of 0 to 59 (decimal) and indicates the count value of minutes.

It counts up when the second counter overflows.

When data is written to this register, it is written to a buffer and then to the counter up to two cycles of f_{RTC} later.

Even if the second count register overflows while this register is being written, this register ignores the overflow and is set to the value written. Set a decimal value of 00 to 59 to this register in BCD code.

The MIN register can be set by an 8-bit memory manipulation instruction.

Reset signal generation clears this register to 00H.

Figure 11 - 8 Format of Minute count register (MIN)

Address: FFF93H After reset: 00H R/W

Symbol	7	6	5	4	3	2	1	0
MIN	0	MIN40	MIN20	MIN10	MIN8	MIN4	MIN2	MIN1

Caution **When it reads or writes from/to the register while the counter is in operation (RTCE = 1), follow the procedures described in 11.4.3 Reading/writing real-time clock.**

11.3.7 Hour count register (HOUR)

The HOUR register is an 8-bit register that takes a value of 00 to 23 or 01 to 12 and 21 to 32 (decimal) and indicates the count value of hours.

It counts up when the minute counter overflows.

When data is written to this register, it is written to a buffer and then to the counter up to two cycles of f_{RTC} later.

Even if the minute count register overflows while this register is being written, this register ignores the overflow and is set to the value written. Specify a decimal value of 00 to 23, 01 to 12, or 21 to 32 by using BCD code according to the time system specified using bit 3 (AMPM) of real-time clock control register 0 (RTCC0).

If the AMPM bit value is changed, the values of the HOUR register change according to the specified time system.

The HOUR register can be set by an 8-bit memory manipulation instruction.

Reset signal generation clears this register to 12H.

However, the value of this register is 00H if the AMPM bit (bit 3 of the RTCC0 register) is set to 1 after reset.

Figure 11 - 9 Format of Hour count register (HOUR)

Address: FFF94H After reset: 12H R/W

Symbol	7	6	5	4	3	2	1	0
HOUR	0	0	HOUR20	HOUR10	HOUR8	HOUR4	HOUR2	HOUR1

Caution 1. Bit 5 (HOUR20) of the HOUR register indicates AM(0)/PM(1) if AMPM = 0 (if the 12-hour system is selected).

Caution 2. When it reads or writes from/to the register while the counter is in operation (RTCE = 1), follow the procedures described in 11.4.3 Reading/writing real-time clock.

Table 11 - 2 shows the relationship between the setting value of the AMPM bit, the hour count register (HOUR) value, and time.

Table 11 - 2 Displayed Time Digits

24-Hour Display (AMPM = 1)		12-Hour Display (AMPM = 1)	
Time	HOUR Register	Time	HOUR Register
0	00 H	12 a.m.	12 H
1	01 H	1 a.m.	01 H
2	02 H	2 a.m.	02 H
3	03 H	3 a.m.	03 H
4	04 H	4 a.m.	04 H
5	05 H	5 a.m.	05 H
6	06 H	6 a.m.	06 H
7	07 H	7 a.m.	07 H
8	08 H	8 a.m.	08 H
9	09 H	9 a.m.	09 H
10	10 H	10 a.m.	10 H
11	11 H	11 a.m.	11 H
12	12 H	12 p.m.	32 H
13	13 H	1 p.m.	21 H
14	14 H	2 p.m.	22 H
15	15 H	3 p.m.	23 H
16	16 H	4 p.m.	24 H
17	17 H	5 p.m.	25 H
18	18 H	6 p.m.	26 H
19	19 H	7 p.m.	27 H
20	20 H	8 p.m.	28 H
21	21 H	9 p.m.	29 H
22	22 H	10 p.m.	30 H
23	23 H	11 p.m.	31 H

The HOUR register value is set to 12-hour display when the AMPM bit is “0” and to 24-hour display when the AMPM bit is “1”.
In 12-hour display, the fifth bit of the HOUR register displays 0 for AM and 1 for PM.

11.3.8 Day count register (DAY)

The DAY register is an 8-bit register that takes a value of 1 to 31 (decimal) and indicates the count value of days. It counts up when the hour counter overflows.
This counter counts as follows.

- 01 to 31 (January, March, May, July, August, October, December)
- 01 to 30 (April, June, September, November)
- 01 to 29 (February, leap year)
- 01 to 28 (February, normal year)

When data is written to this register, it is written to a buffer and then to the counter up to two cycles of f_{RTC} later. Even if the hour count register overflows while this register is being written, this register ignores the overflow and is set to the value written. Set a decimal value of 01 to 31 to this register in BCD code.
The DAY register can be set by an 8-bit memory manipulation instruction.
Reset signal generation clears this register to 01H.

Figure 11 - 10 Format of Day count register (DAY)

Address: FFF96H After reset: 01H R/W

Symbol	7	6	5	4	3	2	1	0
DAY	0	0	DAY20	DAY10	DAY8	DAY4	DAY2	DAY1

Caution When it reads or writes from/to the register while the counter is in operation (RTCE = 1), follow the procedures described in 11.4.3 Reading/writing real-time clock.

11.3.9 Week count register (WEEK)

The WEEK register is an 8-bit register that takes a value of 0 to 6 (decimal) and indicates the count value of weekdays.

It counts up in synchronization with the day counter.

When data is written to this register, it is written to a buffer and then to the counter up to two cycles of f_{RTC} later.

Set a decimal value of 00 to 06 to this register in BCD code.

The WEEK register can be set by an 8-bit memory manipulation instruction.

Reset signal generation clears this register to 00H.

Figure 11 - 11 Format of Week count register (WEEK)

Address: FFF95H After reset: 00H R/W

Symbol	7	6	5	4	3	2	1	0
WEEK	0	0	0	0	0	WEEK4	WEEK2	WEEK1

Caution 1. The value corresponding to the month count register (MONTH) or the day count register (DAY) is not stored in the week count register (WEEK) automatically. After reset release, set the week count register as follow.

Day	WEEK
Sunday	00 H
Monday	01 H
Tuesday	02 H
Wednesday	03 H
Thursday	04 H
Friday	05 H
Saturday	06 H

Caution 2. When it reads or writes from/to the register while the counter is in operation (RTCE = 1), follow the procedures described in 11.4.3 Reading/writing real-time clock.

11.3.10 Month count register (MONTH)

The MONTH register is an 8-bit register that takes a value of 1 to 12 (decimal) and indicates the count value of months.

It counts up when the day counter overflows.

When data is written to this register, it is written to a buffer and then to the counter up to two cycles of f_{RTC} later.

Even if the day count register overflows while this register is being written, this register ignores the overflow and is set to the value written. Set a decimal value of 01 to 12 to this register in BCD code.

The MONTH register can be set by an 8-bit memory manipulation instruction.

Reset signal generation clears this register to 01H.

Figure 11 - 12 Format of Month count register (MONTH)

Address: FFF97H After reset: 01H R/W

Symbol	7	6	5	4	3	2	1	0
MONTH	0	0	0	MONTH10	MONTH8	MONTH4	MONTH2	MONTH1

Caution When it reads or writes from/to the register while the counter is in operation (RTCE = 1), follow the procedures described in 11.4.3 Reading/writing real-time clock.

11.3.11 Year count register (YEAR)

The YEAR register is an 8-bit register that takes a value of 0 to 99 (decimal) and indicates the count value of years.

It counts up when the month count register (MONTH) overflows.

Values 00, 04, 08, …, 92, and 96 indicate a leap year.

When data is written to this register, it is written to a buffer and then to the counter up to two cycles of f_{RTC} later.

Even if the MONTH register overflows while this register is being written, this register ignores the overflow and is set to the value written. Set a decimal value of 00 to 99 to this register in BCD code.

The YEAR register can be set by an 8-bit memory manipulation instruction.

Reset signal generation clears this register to 00H.

Figure 11 - 13 Format of Year count register (YEAR)

Address: FFF98H After reset: 00H R/W

Symbol	7	6	5	4	3	2	1	0
YEAR	YEAR80	YEAR40	YEAR20	YEAR10	YEAR8	YEAR4	YEAR2	YEAR1

Caution When it reads or writes from/to the register while the counter is in operation (RTCE = 1), follow the procedures described in 11.4.3 Reading/writing real-time clock.

11.3.12 Watch error correction register (SUBCUD)

This register is used to correct the watch with high accuracy when it is slow or fast by changing the value that overflows from the internal counter (16-bit) to the second count register (SEC) (reference value: 7FFFH).
The SUBCUD register can be set by an 8-bit memory manipulation instruction.
Reset signal generation clears this register to 00H.

Figure 11 - 14 Format of Watch error correction register (SUBCUD)

Address: FFF99H After reset: 00H R/W

Symbol	7	6	5	4	3	2	1	0
SUBCUD	DEV	F6	F5	F4	F3	F2	F1	F0

DEV	Setting of watch error correction timing
0	Corrects watch error when the second digits are at 00, 20, or 40 (every 20 seconds).
1	Corrects watch error only when the second digits are at 00 (every 60 seconds).
Writing to the SUBCUD register at the following timing is prohibited. • When DEV = 0 is set: For a period of SEC = 00H, 20H, 40H • When DEV = 1 is set: For a period of SEC = 00H	

F6	Setting of watch error correction value
0	Increases by {(F5, F4, F3, F2, F1, F0) – 1} × 2.
1	Decreases by {(/F5, /F4, /F3, /F2, /F1, /F0) + 1} × 2.
When (F6, F5, F4, F3, F2, F1, F0) = (*, 0, 0, 0, 0, 0, *), the watch error is not corrected. * is 0 or 1. /F5 to /F0 are the inverted values of the corresponding bits (000011 when 111100). Range of correction value: (when F6 = 0) 2, 4, 6, 8, ... , 120, 122, 124 (when F6 = 1) –2, –4, –6, –8, ... , –120, –122, –124	

The range of value that can be corrected by using the watch error correction register (SUBCUD) is shown below.

	DEV = 0 (correction every 20 seconds)	DEV = 1 (correction every 60 seconds)
Correctable range	–189.2 ppm to 189.2 ppm	–63.1 ppm to 63.1 ppm
Maximum excludes quantization error	±1.53 ppm	±0.51 ppm
Minimum resolution	±3.05 ppm	±1.02 ppm

Remark If a correctable range is −63.1 ppm or lower and 63.1 ppm or higher, set 0 to DEV.

11.3.13 Alarm minute register (ALARMWM)

This register is used to set minutes of alarm.
The ALARMWM register can be set by an 8-bit memory manipulation instruction.
Reset signal generation clears this register to 00H.

Caution Set a decimal value of 00 to 59 to this register in BCD code. If a value outside the range is set, the alarm is not detected.

Figure 11 - 15 Format of Alarm minute register (ALARMWM)

Address: FFF9AH After reset: 00H R/W

Symbol	7	6	5	4	3	2	1	0
ALARMWM	0	WM40	WM20	WM10	WM8	WM4	WM2	WM1

11.3.14 Alarm hour register (ALARMWH)

This register is used to set hours of alarm.
The ALARMWH register can be set by an 8-bit memory manipulation instruction.
Reset signal generation clears this register to 12H.
However, the value of this register is 00H if the AMPM bit is set to 1 after reset.

Caution Set a decimal value of 00 to 23, 01 to 12, or 21 to 32 to this register in BCD code. If a value outside the range is set, the alarm is not detected.

Figure 11 - 16 Format of Alarm hour register (ALARMWH)

Address: FFF9BH After reset: 12H R/W

Symbol	7	6	5	4	3	2	1	0
ALARMWH	0	0	WH20	WH10	WH8	WH4	WH2	WH1

Caution Bit 5 (WH20) of the ALARMWH register indicates AM(0)/PM(1) if AMPM = 0 (if the 12-hour system is selected).

11.3.15 Alarm week register (ALARMWW)

This register is used to set date of alarm.
The ALARMWW register can be set by an 8-bit memory manipulation instruction.
Reset signal generation clears this register to 00H.

Figure 11 - 17 Format of Alarm week register (ALARMWW)

Address: FFF9CH After reset: 00H R/W

Symbol	7	6	5	4	3	2	1	0
ALARMWW	0	WW6	WW5	WW4	WW3	WW2	WW1	WW0

Here is an example of setting the alarm.

Time of Alarm	Day							12-Hour Display				24-Hour Display			
	Sunday	Monday	Tuesday	Wednesday	Thursday	Friday	Saturday	Hour 10	Hour 1	Minute 10	Minute 1	Hour 10	Hour 1	Minute 10	Minute 1
	WW0	WW1	WW2	WW3	WW4	WW5	WW6								
Every day, 0:00 a.m.	1	1	1	1	1	1	1	1	2	0	0	0	0	0	0
Every day, 1:30 a.m.	1	1	1	1	1	1	1	0	1	3	0	0	1	3	0
Every day, 11:59 a.m.	1	1	1	1	1	1	1	1	1	5	9	1	1	5	9
Monday through Friday, 0:00 p.m.	0	1	1	1	1	1	0	3	2	0	0	1	2	0	0
Sunday, 1:30 p.m.	1	0	0	0	0	0	0	2	1	3	0	1	3	3	0
Monday, Wednesday, Friday, 11:59 p.m.	0	1	0	1	0	1	0	3	1	5	9	2	3	5	9

11.3.16 Port mode register 3 (PM3)

The PM3 register can be set by a 1-bit or 8-bit manipulation instruction.

Reset signal generation sets this register to FFH.

When using the port 3 as the RTC1HZ pin for output of 1 Hz, set the PM30 bit to 0.

Figure 11 - 18 Format of Port mode register 3 (PM3)

Address: FFF23H After reset: FFH R/W

Symbol	7	6	5	4	3	2	1	0
PM3	1	1	1	1	1	1	PM31	PM30

11.3.17 Port register 3 (P3)

The P3 register can be set by a 1-bit or 8-bit manipulation instruction.

Reset signal generation sets this register to 00H.

When using the port 3 as 1 Hz output to the RTC1Hz pin, set the P30 bit to 0.

Figure 11 - 19 Format of Port register 3 (P3)

Address: FFF03H After reset: 00H R/W

Symbol	7	6	5	4	3	2	1	0
P3	0	0	0	0	0	0	P31	P30

11.4 Real-time Clock Operation

11.4.1 Starting operation of real-time clock

Figure 11 - 20 Procedure for Starting Operation of Real-time Clock

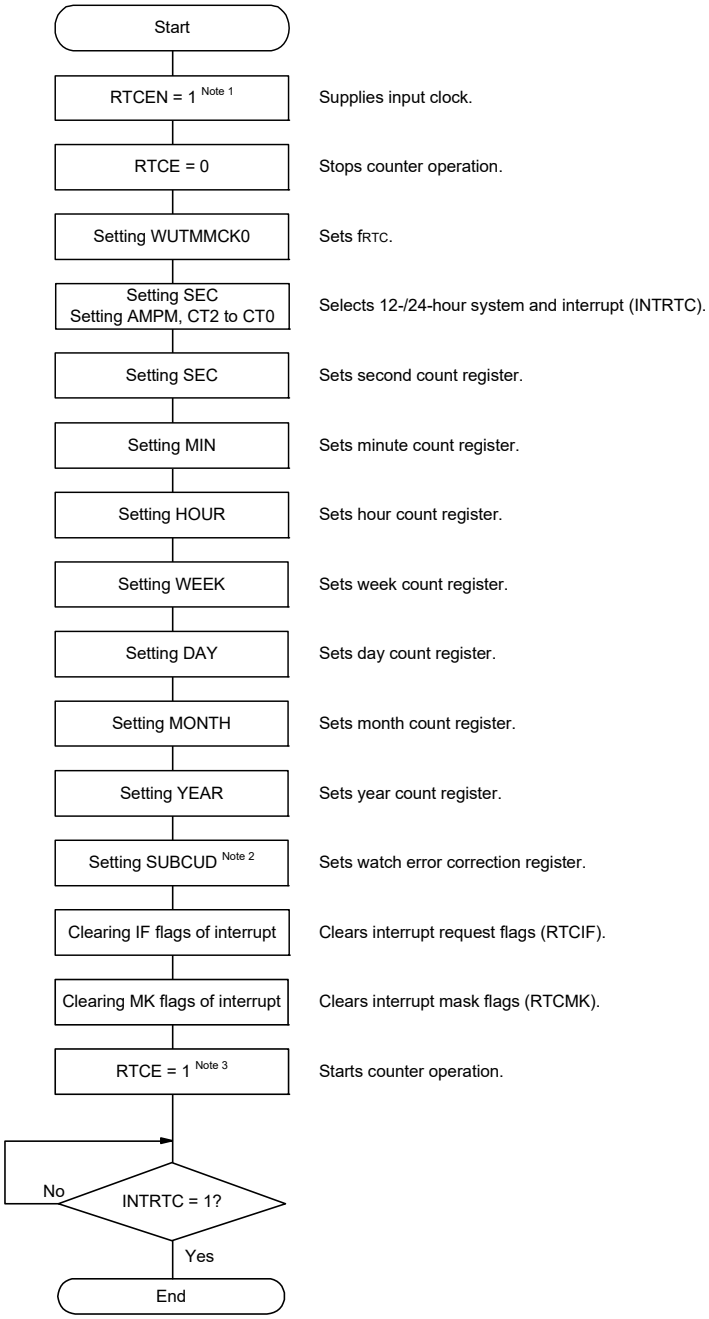

Note 1. First set the RTCEN bit to 1, while oscillation of the count clock (f_{RTC}) is stable.

Note 2. Set up the SUBCUD register only if the watch error must be corrected. For details about how to calculate the correction value, see **11.4.6 Example of watch error correction of real-time clock**.

Note 3. Confirm the procedure described in **11.4.2 Shifting to HALT/STOP mode after starting operation** when shifting to HALT/STOP mode without waiting for INTRTC = 1 after RTCE = 1.

11.4.2 Shifting to HALT/STOP mode after starting operation

Perform one of the following processing when shifting to HALT/STOP mode immediately after setting the RTCE bit to 1.

However, after setting the RTCE bit to 1, this processing is not required when shifting to HALT/STOP mode after INTRTC interrupt has occurred.

- Shifting to HALT/STOP mode when at least two count clock (f_{RTC}) have elapsed after setting the RTCE bit to 1 (see **Figure 11 - 21**, **Example 1**).
- Checking by polling the RWST bit to become 1, after setting the RTCE bit to 1 and then setting the RWAIT bit to 1. Afterward, setting the RWAIT bit to 0 and shifting to HALT/STOP mode after checking again by polling that the RWST bit has become 0 (see **Figure 11 - 21**, **Example 2**).

Figure 11 - 21 Procedure for Shifting to HALT/STOP Mode After Setting RTCE bit to 1

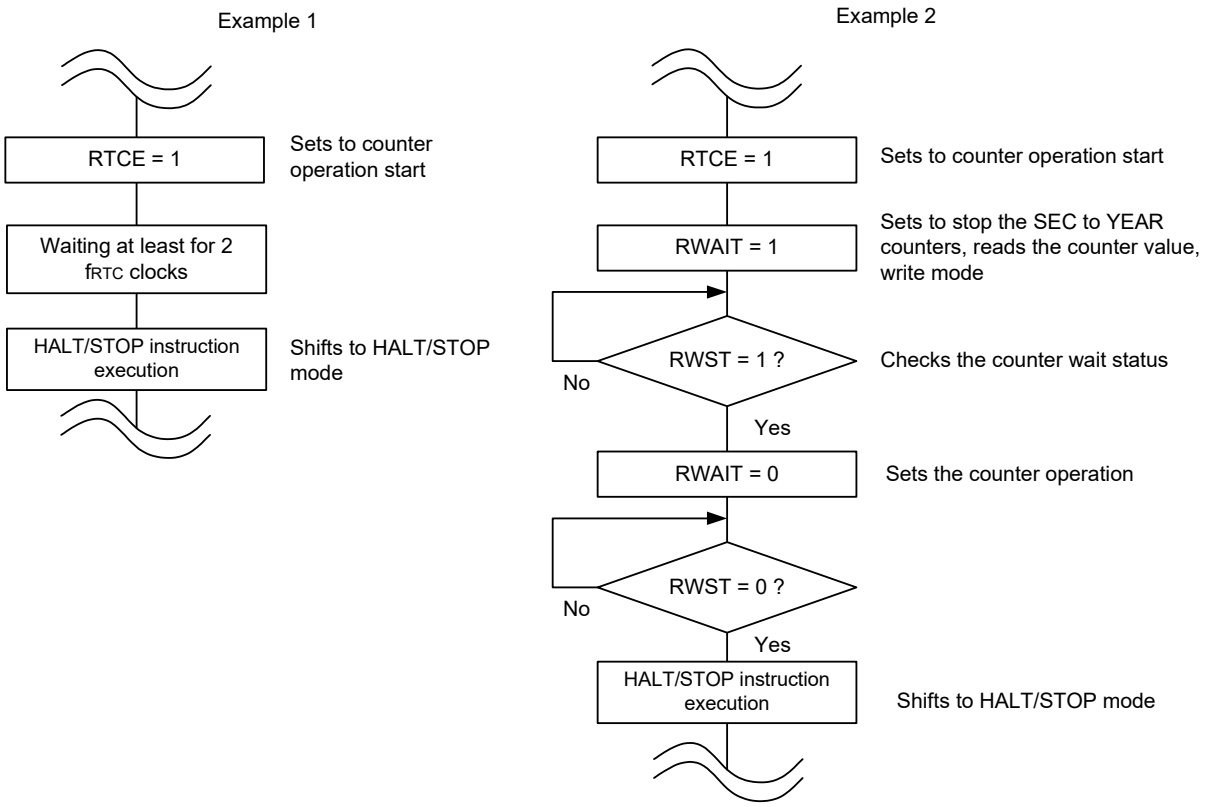

11.4.3 Reading/writing real-time clock

Read or write the counter after setting 1 to RWAIT first.

Set RWAIT to 0 after completion of reading or writing the counter.

Figure 11 - 22 Procedure for Reading Real-time Clock

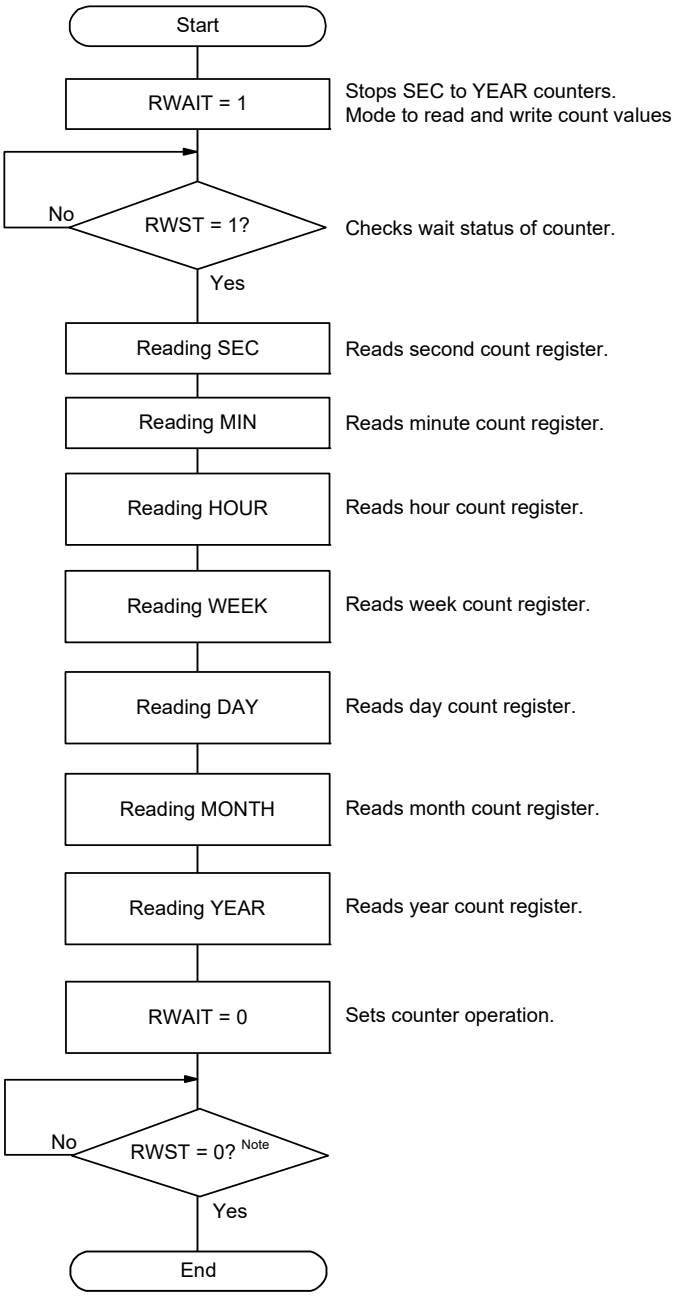

Note Be sure to confirm that RWST = 0 before setting HALT/STOP mode.

Caution **Complete the series of process of setting the RWAIT bit to 1 to clearing the RWAIT bit to 0 within 1 second. When reading to the counter is required while generation of the alarm interrupt is enabled, first set the CT2 to CT0 bits to 010B (generating the constant-period interrupt once per 1 second). Then, complete the processing from setting the RWAIT bit to 1 to setting it to 0 before generation of the next constant-period interrupt.**

Remark The second count register (SEC), minute count register (MIN), hour count register (HOUR), week count register (WEEK), day count register (DAY), month count register (MONTH), and year count register (YEAR) may be read in any sequence. All the registers do not have to read and only some registers may be read.

Figure 11 - 23 Procedure for Writing Real-time Clock

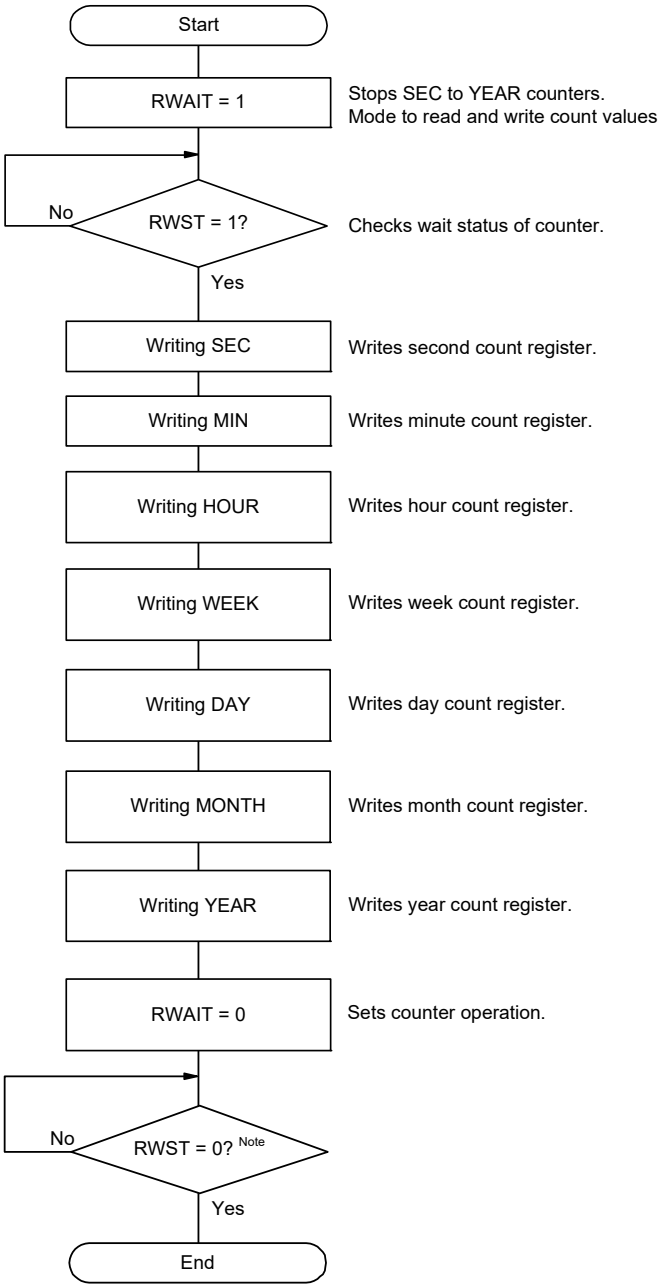

Note Be sure to confirm that RWST = 0 before setting HALT/STOP mode.

Caution 1. Complete the series of operations of setting the RWAIT bit to 1 to clearing the RWAIT bit to 0 within 1 second. When writing to the counter is required while generation of the alarm interrupt is enabled, first set the CT2 to CT0 bits to 010B (generating the constant-period interrupt once per 1 second). Then, complete the processing from setting the RWAIT bit to 1 to setting it to 0 before generation of the next constant-period interrupt.

Caution 2. When changing the values of the SEC, MIN, HOUR, WEEK, DAY, MONTH, and YEAR register while the counter operates (RTCE = 1), rewrite the values of the MIN register after disabling interrupt servicing INTRTC by using the interrupt mask flag register. Furthermore, clear the WAFG, RIFG and RTCIF flags after rewriting the MIN register.

Remark The second count register (SEC), minute count register (MIN), hour count register (HOUR), week count register (WEEK), day count register (DAY), month count register (MONTH), and year count register (YEAR) may be written in any sequence.

All the registers do not have to be set and only some registers may be written.

11.4.4 Setting alarm of real-time clock

Set time of alarm after setting 0 to WALE (alarm operation invalid) first.

Figure 11 - 24 Alarm Setting Procedure

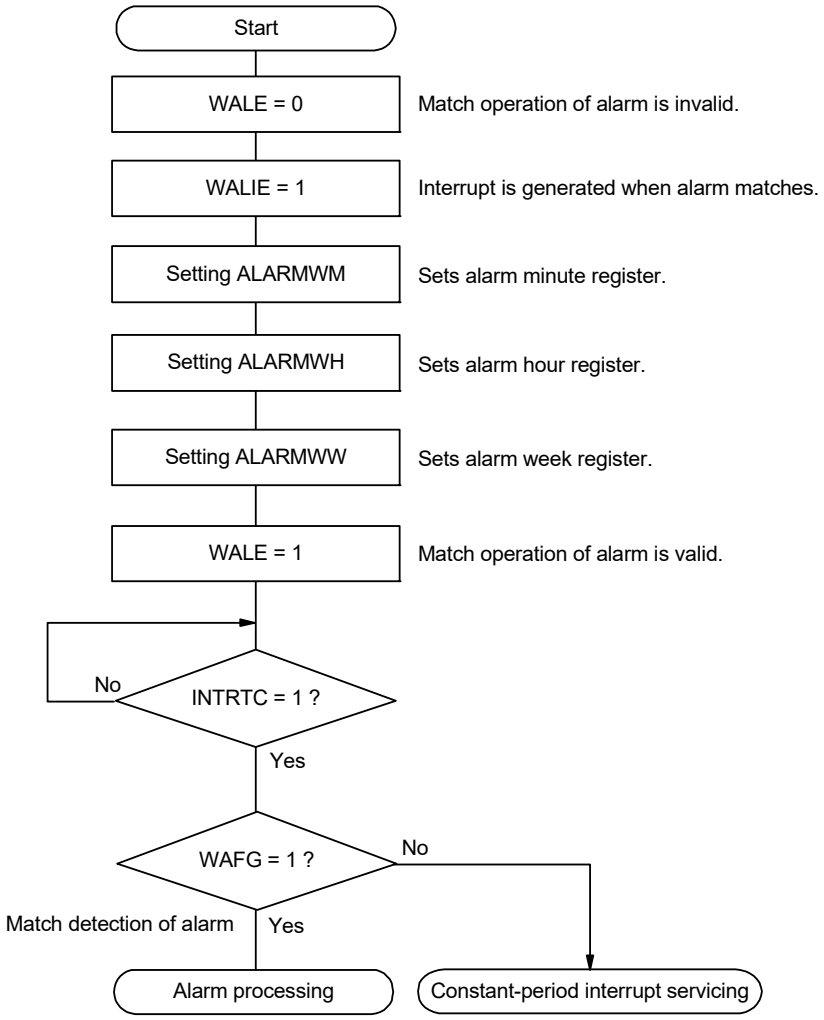

Remark 1. The alarm week register (ALARMWW), alarm hour register (ALARMWH), and alarm week register (ALARMWW) may be written in any sequence.

Remark 2. Fixed-cycle interrupts and alarm match interrupts use the same interrupt source (INTRTC). When using these two types of interrupts at the same time, which interrupt occurred can be judged by checking the fixed-cycle interrupt status flag (RIFG) and the alarm detection status flag (WAFG) upon INTRTC occurrence.

11.4.5 1 Hz output of real-time clock

Figure 11 - 25 1 Hz Output Setting Procedure

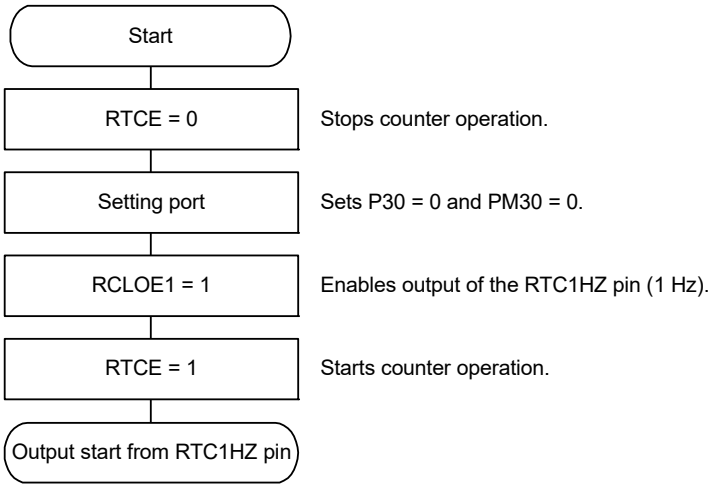

Caution 1. First set the RTCEN bit to 1, while oscillation of the count clock (f_{SUB}) is stable.
Caution 2. The 1 Hz output function of the real-time clock is not provided in 24- and 32-pin products.

11.4.6 Example of watch error correction of real-time clock

The watch can be corrected with high accuracy when it is slow or fast, by setting a value to the watch error correction register.

Example of calculating the correction value

The correction value used when correcting the count value of the internal counter (16-bit) is calculated by using the following expression.
Set the DEV bit to 0 when the correction range is –63.1 ppm or less, or 63.1 ppm or more.

(When DEV = 0)

Correction value [Note] = Number of correction counts in 1 minute ÷ 3 = (Oscillation frequency ÷ Target frequency – 1) × 32768 × 60 ÷ 3

(When DEV = 1)

Correction value [Note] = Number of correction counts in 1 minute = (Oscillation frequency ÷ Target frequency – 1) × 32768 × 60

Note The correction value is the watch error correction value calculated by using bits 6 to 0 of the watch error correction register (SUBCUD).
(When F6 = 0) Correction value = {(F5, F4, F3, F2, F1, F0) – 1} × 2
(When F6 = 1) Correction value = – {(/F5, /F4, /F3, /F2, /F1, /F0) + 1} × 2

When (F6, F5, F4, F3, F2, F1, F0) is (*, 0, 0, 0, 0, 0, *), watch error correction is not performed. "*" is 0 or 1.
/F5 to /F0 are bit-inverted values (000011 when 111100).

Remark 1. The correction value is 2, 4, 6, 8, … 120, 122, 124 or –2, –4, –6, –8, … –120, –122, –124.

Remark 2. The oscillation frequency is the count clock (f_{RTC}).
It can be calculated from the output frequency of the RTC1HZ pin × 32768 when the watch error correction register is set to its initial value (00H).

Remark 3. The target frequency is the frequency resulting after correction performed by using the watch error correction register.

Correction example 1

Example of correcting from 32772.3 Hz to 32768 Hz (32772.3 Hz - 131.2 ppm)

[Measuring the oscillation frequency]
The oscillation frequency Note of each product is measured by outputting about 32.768 kHz from the PCLBUZ0 pin, or by outputting about 1 Hz from the RTC1HZ pin when the watch error correction register (SUBCUD) is set to its initial value (00H).

Note See **11.4.5 1 Hz output of real-time clock** for the setting procedure of the RTC1Hz output, and see **13.4 Operations of Clock Output/Buzzer Output Controller** for the setting procedure of outputting about 32 kHz from the PCLBUZ0 pin.

[Calculating the correction value]
(When the output frequency from the PCLBUZ0 pin is 32772.3 Hz)
Assume the target frequency to be 32768 Hz (32772.3 Hz - 131.2 ppm) and DEV to be 0, because the correctable range of -131.2 ppm is -63.1 ppm or lower.

The expression for calculating the correction value when DEV is 0 is applied.

Correction value= Number of correction counts in 1 minute ÷ 3
= (Oscillation frequency ÷ target frequency - 1) × 32768 × 60 ÷ 3
= (32772.3 ÷ 32768 - 1) × 32768 × 60 ÷ 3
= 86

[Calculating the values to be set to (F6 to F0)]
(When the correction value is 86)
If the correction value is 0 or larger (when slowing), assume F6 to be 0.
Calculate (F5, F4, F3, F2, F1, F0) from the correction value.

{(F5, F4, F3, F2, F1, F0) - 1} × 2= 86
(F5, F4, F3, F2, F1, F0)= 44
(F5, F4, F3, F2, F1, F0)= (1, 0, 1, 1, 0, 0)

Consequently, when correcting from 32772.3 Hz to 32768 Hz (32772.3 Hz - 131.2 ppm), setting the correction register such that DEV is 0 and the correction value is 86 (bits 6 to 0 of the SUBCUD register: 0101100) results in 32768 Hz (0 ppm).

Figure 11 - 26 shows the operation when (DEV, F6, F5, F4, F3, F2, F1, F0) is (0, 0, 1, 0, 1, 1, 0, 0).

Figure 11 - 26 Correction Operation when (DEV, F6, F5, F4, F3, F2, F1, F0) = (0, 0, 1, 0, 1, 1, 0, 0)

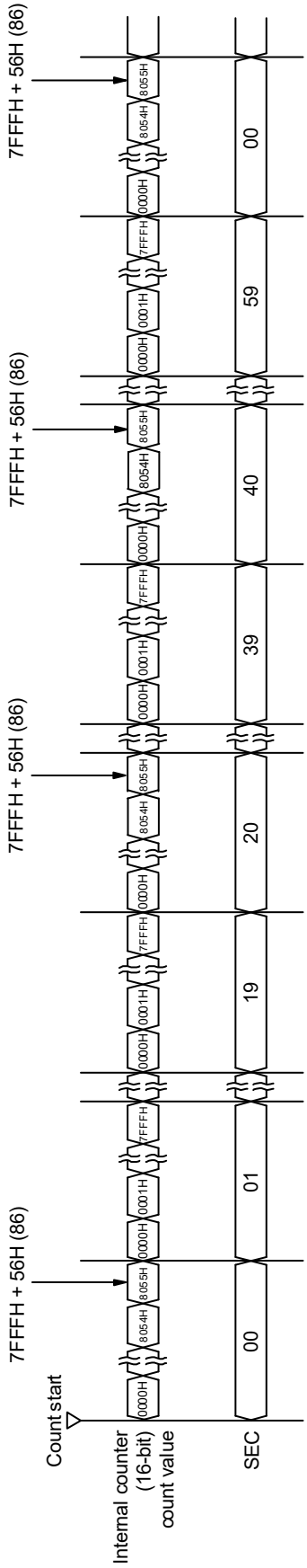

Correction example 2

Example of correcting from 32767.4 Hz to 32768 Hz (32767.4 Hz + 18.3 ppm)

[Measuring the oscillation frequency]

The oscillation frequency Note of each product is measured by outputting about 1 Hz from the RTC1HZ pin when the watch error correction register (SUBCUD) is set to its initial value (00H).

Note See **11.4.5 1 Hz output of real-time clock** for the setting procedure of outputting about 1 Hz from the RTC1HZ pin.

[Calculating the correction value]

(When the output frequency from the RTCCL pin is 0.9999817 Hz)

Oscillation frequency = 32768 × 0.9999817 ≈ 32767.4 Hz

Assume the target frequency to be 32768 Hz (32767.4 Hz + 18.3 ppm) and DEV to be 1.

The expression for calculating the correction value when DEV is 1 is applied.

Correction value = Number of correction counts in 1 minute
= (Oscillation frequency ÷ Target frequency - 1) × 32768 × 60
= (32767.4 ÷ 32768 - 1) × 32768 × 60
= -36

[Calculating the values to be set to (F6 to F0)]

(When the correction value is - 36)

If the correction value is 0 or less (when quickening), assume F6 to be 1.

Calculate (F5, F4, F3, F2, F1, F0) from the correction value.

- {(/F5, /F4, /F3, /F2, /F1, /F0) + 1} × 2= -36
(/F5, /F4, /F3, /F2, /F1, /F0)= 17
(/F5, /F4, /F3, /F2, /F1, /F0)= (0, 1, 0, 0, 0, 1)
(F5, F4, F3, F2, F1, F0)= (1, 0, 1, 1, 1, 0)

Consequently, when correcting from 32767.4 Hz to 32768 Hz (32767.4 Hz + 18.3 ppm), setting the correction register such that DEV is 1 and the correction value is –36 (bits 6 to 0 of the SUBCUD register: 1101110) results in 32768 Hz (0 ppm).

Figure 11 - 27 shows the Operation when (DEV, F6, F5, F4, F3, F2, F1, F0) = (1, 1, 1, 0, 1, 1, 1, 0).

Figure 11 - 27 Operation when (DEV, F6, F5, F4, F3, F2, F1, F0) = (1, 1, 1, 0, 1, 1, 1, 0)

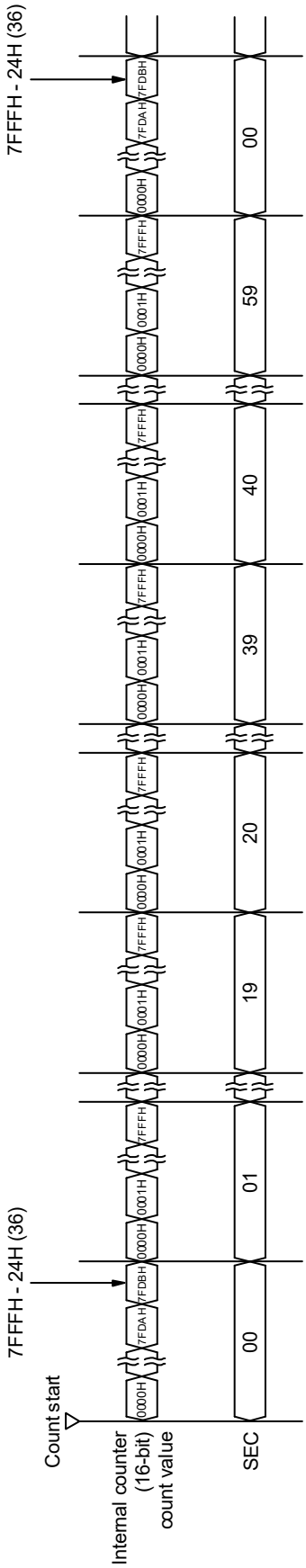

CHAPTER 12 12-BIT INTERVAL TIMER

12.1 Functions of 12-bit Interval Timer

An interrupt (INTIT) is generated at any previously specified time interval. It can be utilized for wakeup from STOP mode and triggering an A/D converter's SNOOZE mode.

12.2 Configuration of 12-bit Interval Timer

The 12-bit interval timer includes the following hardware.

Table 12 - 1 Configuration of 12-bit Interval Timer

Item	Configuration
Counter	12-bit counter
Control registers	Peripheral enable register 0 (PER0)
	Subsystem clock supply mode control register (OSMC)
	12-bit interval timer control register (ITMC)

Figure 12 - 1 Block Diagram of 12-bit Interval Timer

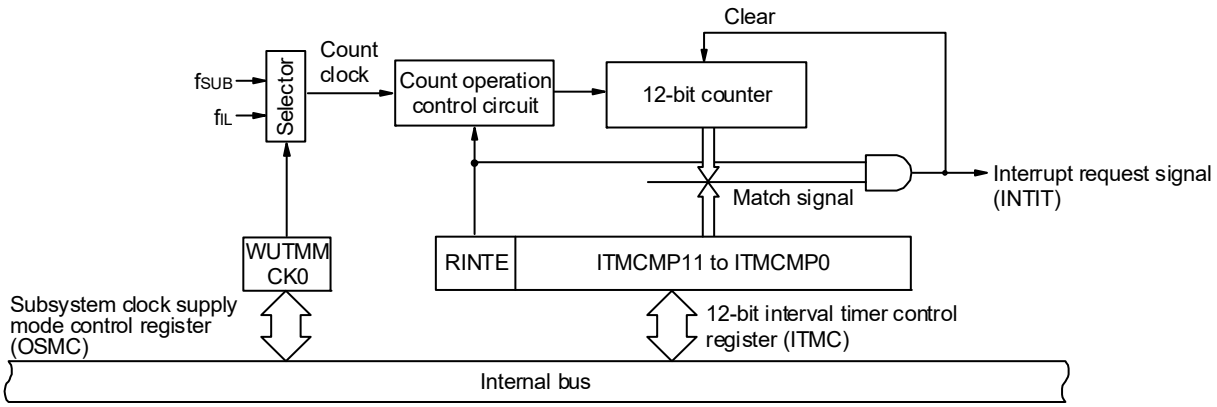

Note The subsystem clock (f_{SUB}) can be selected as the count clock in 36-, 48-, and 64-pin products.

12.3 Registers Controlling 12-bit Interval Timer

The 12-bit interval timer is controlled by the following registers.

- Peripheral enable register 0 (PER0)
- Subsystem clock supply mode control register (OSMC)
- 12-bit interval timer control register (ITMC)

12.3.1 Peripheral enable register 0 (PER0)

This register is used to enable or disable supplying the clock to the peripheral hardware. Clock supply to a hardware macro that is not used is stopped in order to reduce the power consumption and noise.
When the 12-bit interval timer is used, be sure to set bit 7 (RTCEN) of this register to 1.
The PER0 register can be set by a 1-bit or 8-bit memory manipulation instruction.
Reset signal generation clears this register to 00H.

Figure 12 - 2 Format of Peripheral enable register 0 (PER0)

Address: F00F0H After reset: 00H R/W

Symbol	7	6	5	4	3	2	1	0
PER0	RTCEN	IRDAEN	ADCEN	IICA0EN	SAU1EN	SAU0EN	0	TAU0EN

RTCEN	Control of real-time clock (RTC) and 12-bit interval timer input clock supply
0	Stops input clock supply. • SFR used by the real-time clock (RTC) and 12-bit interval timer cannot be written. • The real-time clock (RTC) and 12-bit interval timer are in the reset status.
1	Enables input clock supply. • SFR used by the real-time clock (RTC) and 12-bit interval timer can be read/written.

Caution 1. When using the 12-bit interval timer, be sure to first set the RTCEN bit to 1 and then set the following register, while oscillation of the count clock is stable. If RTCEN = 0, writing to the control register controlling the 12-bit interval timer is ignored, and, even if the register is read, only the default value is read (except the subsystem clock supply mode control register (OSMC)).
• 12-bit interval timer control register (ITMC)

Caution 2. Clock supply to peripheral functions other than the real-time clock and 12-bit interval timer can be stopped in STOP mode or HALT mode when the subsystem clock is used, by setting the RTCLPC bit of the subsystem clock supply mode control register (OSMC) to 1.

Caution 3. Be sure to clear bit 1 to "0".

12.3.2 Subsystem clock supply mode control register (OSMC)

The WUTMMCK0 bit can be used to select the 12-bit interval timer, real-time clock, and timer RJ operation clock. In addition, by stopping clock functions that are unnecessary, the RTCLPC bit can be used to reduce power consumption. For details about setting the RTCLPC bit, see **CHAPTER 5 CLOCK GENERATOR**.

The OSMC register can be set by an 8-bit memory manipulation instruction.

Reset signal generation clears this register to 00H.

Figure 12 - 3 Format of Subsystem clock supply mode control register (OSMC)

Address: F00F3H After reset: 00H R/W

Symbol	7	6	5	4	3	2	1	0
OSMC	RTCLPC	0	0	WUTMMCK0	0	0	0	0

WUTMMCK0	Selection of operation clock for real-time clock, 12-bit interval timer, and timer RJ.
0	Subsystem clock (f_{SUB}) • The subsystem clock is selected as the operation clock for the real-time clock and the 12- bit interval timer. • The low-speed on-chip oscillator cannot be selected as the count source for timer RJ.
1	Low-speed on-chip oscillator clock (f_{IL}) • The low-speed on-chip oscillator clock is selected as the operation clock for the real-time clock and the 12-bit interval timer. • Either the low-speed on-chip oscillator or the subsystem clock can be selected as the count source for timer RJ.

12.3.3 12-bit interval timer control register (ITMC)

This register is used to set up the starting and stopping of the 12-bit interval timer operation and to specify the timer compare value.

The ITMC register can be set by a 16-bit memory manipulation instruction.

Reset signal generation clears this register to 0FFFH.

Figure 12 - 4 Format of 12-bit interval timer control register (ITMC)

Address: FFF90H After reset: 0FFFH R/W

Symbol	15	14	13	12	11 to 0
ITMC	RINTE	0	0	0	ITCMP11 to ITCMP0

RINTE	12-bit interval timer operation control
0	Count operation stopped (count clear)
1	Count operation started

ITCMP11 to ITCMP0	Specification of the 12-bit interval timer compare value
001H	These bits generate a fixed-cycle interrupt (count clock cycles x (ITCMP setting + 1)).
• • •	
FFFH	
000H	Setting prohibit
Example interrupt cycles when 001H or FFFH is specified for ITCMP11 to ITCMP0 • ITCMP11 to ITCMP0 = 001H, count clock: when f_{SUB} = 32.768 kHz 1/32.768 [kHz] × (1 + 1) = 0.06103515625 [ms] ≅ 61.03 [μs] • ITCMP11 to ITCMP0 = FFFH, count clock: when f_{SUB} = 32.768 kHz 1/32.768 [kHz] × (4095 + 1) = 125 [ms]	

Caution 1. Before changing the RINTE bit from 1 to 0, use the interrupt mask flag register to disable the INTIT interrupt servicing. When the operation starts (from 0 to 1) again, clear the TMKAIF flag, and then enable the interrupt servicing.

Caution 2. The value read from the RINTE bit is applied one count clock cycle after setting the RINTE bit.

Caution 3. When setting the RINTE bit after returned from standby mode and entering standby mode again, confirm that the written value of the RINTE bit is reflected, or wait that more than one clock of the count clock has elapsed after returned from standby mode. Then enter standby mode.

Caution 4. Only change the setting of the ITCMP11 to ITCMP0 bits when RINTE = 0.
However, it is possible to change the settings of the ITCMP11 to ITCMP0 bits at the same time as when changing RINTE from 0 to 1 or 1 to 0.

12.4 12-bit Interval Timer Operation

12.4.1 12-bit interval timer operation timing

The count value specified for the ITCMP11 to ITCMP0 bits is used as an interval to operate an 12-bit interval timer that repeatedly generates interrupt requests (INTIT).

When the RINTE bit is set to 1, the 12-bit counter starts counting.

When the 12-bit counter value matches the value specified for the ITCMP11 to ITCMP0 bits, the 12-bit counter value is cleared to 0, counting continues, and an interrupt request signal (INTIT) is generated at the same time.

Figure 12 - 5 shows the basic operation of the 12-bit interval timer.

Figure 12 - 5 12-bit Interval Timer Operation Timing (ITCMP11 to ITCMP0 = 0FFH, count clock: f_{SUB} = 32.768 kHz)

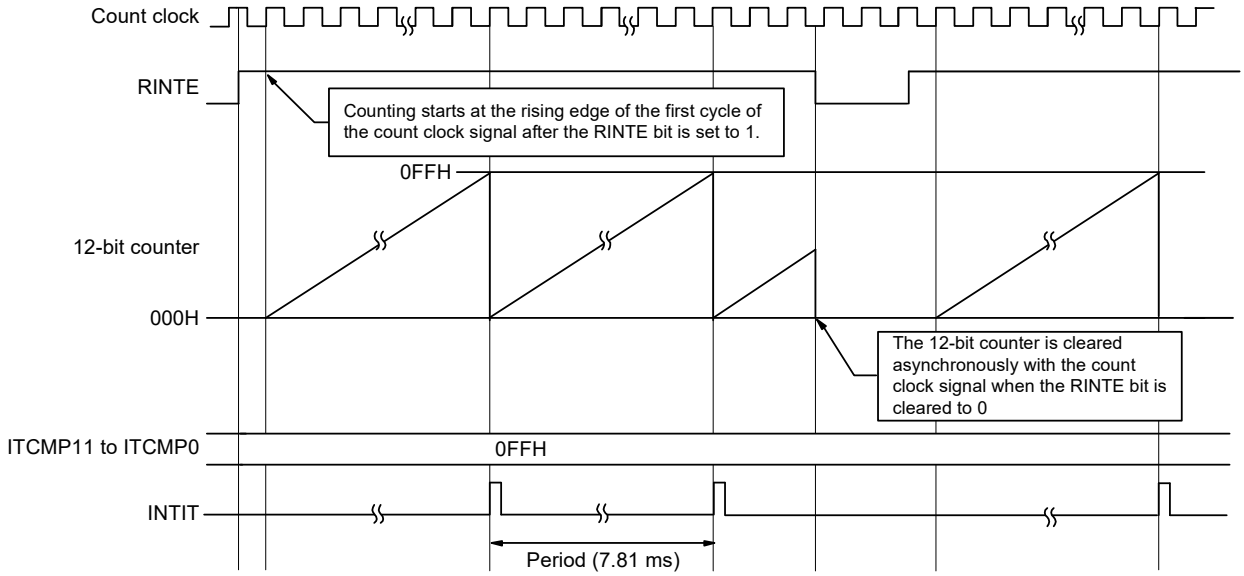

12.4.2 Start of count operation and re-enter to HALT/STOP mode after returned from HALT/STOP mode

When setting the RINTE bit after returned from HALT or STOP mode and entering HALT or STOP mode again, write 1 to the RINTE bit, and confirm the written value of the RINTE bit is reflected or wait for at least one cycle of the count clock.
Then, enter HALT or STOP mode.

- After setting RINTE to 1, confirm by polling that the RINTE bit has become 1, and then enter HALT or STOP mode (see **Example 1** in **Figure 12 - 6**).
- After setting RINTE to 1, wait for at least one cycle of the count clock and then enter HALT or STOP mode (see **Example 2** in **Figure 12 - 6**).

Figure 12 - 6 Procedure of Entering to HALT or STOP Mode After Setting RINTE to 1

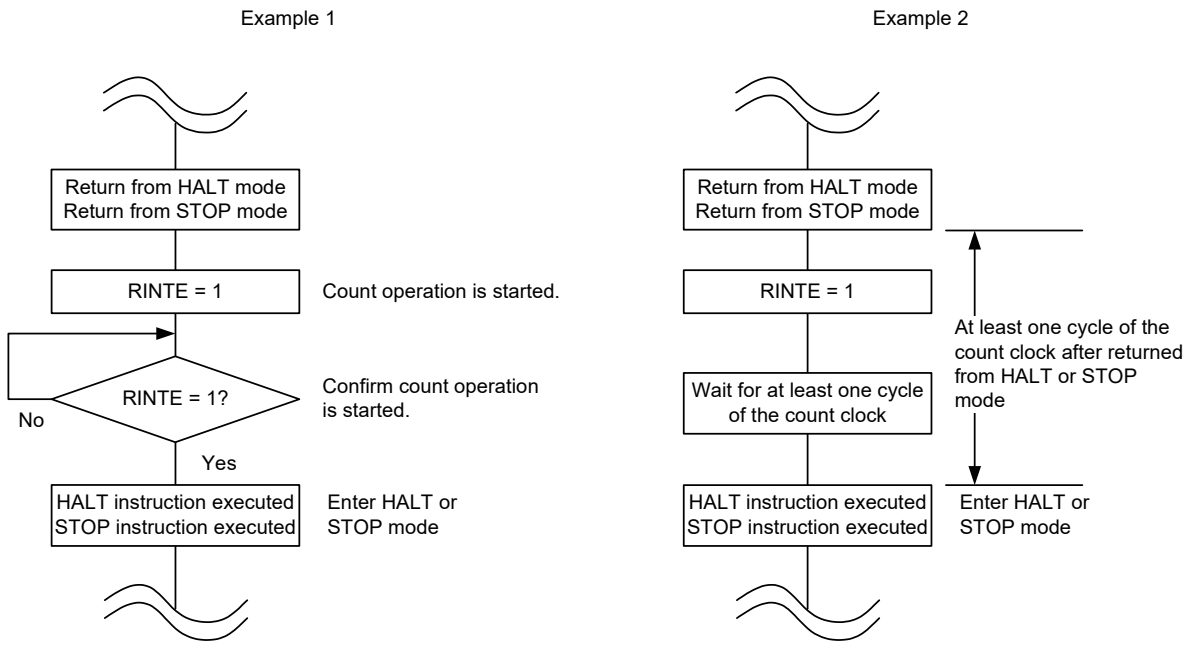

CHAPTER 13 CLOCK OUTPUT/BUZZER OUTPUT CONTROLLER

Caution Most of the following descriptions in this chapter use the 64-pin as an example.

13.1 Functions of Clock Output/Buzzer Output Controller

The clock output controller is intended for clock output for supply to peripheral ICs. Buzzer output is a function to output a square wave of buzzer frequency.
One pin can be used to output a clock or buzzer sound.
Two output pins, PCLBUZ0 and PCLBUZ1, are available.
The PCLBUZn pin outputs a clock selected by clock output select register n (CKSn).
Figure 13 - 1 shows the Block Diagram of Clock Output/Buzzer Output Controller.

Caution In HALT mode when RTCLPC in the subsystem clock supply mode control register (OSMC) = 1 and while the subsystem clock (f_{SUB}) is used for CPU operation, it is not possible to output the subsystem clock (f_{SUB}) from the PCLBUZn pin.

Remark n = 0, 1

Figure 13 - 1 Block Diagram of Clock Output/Buzzer Output Controller

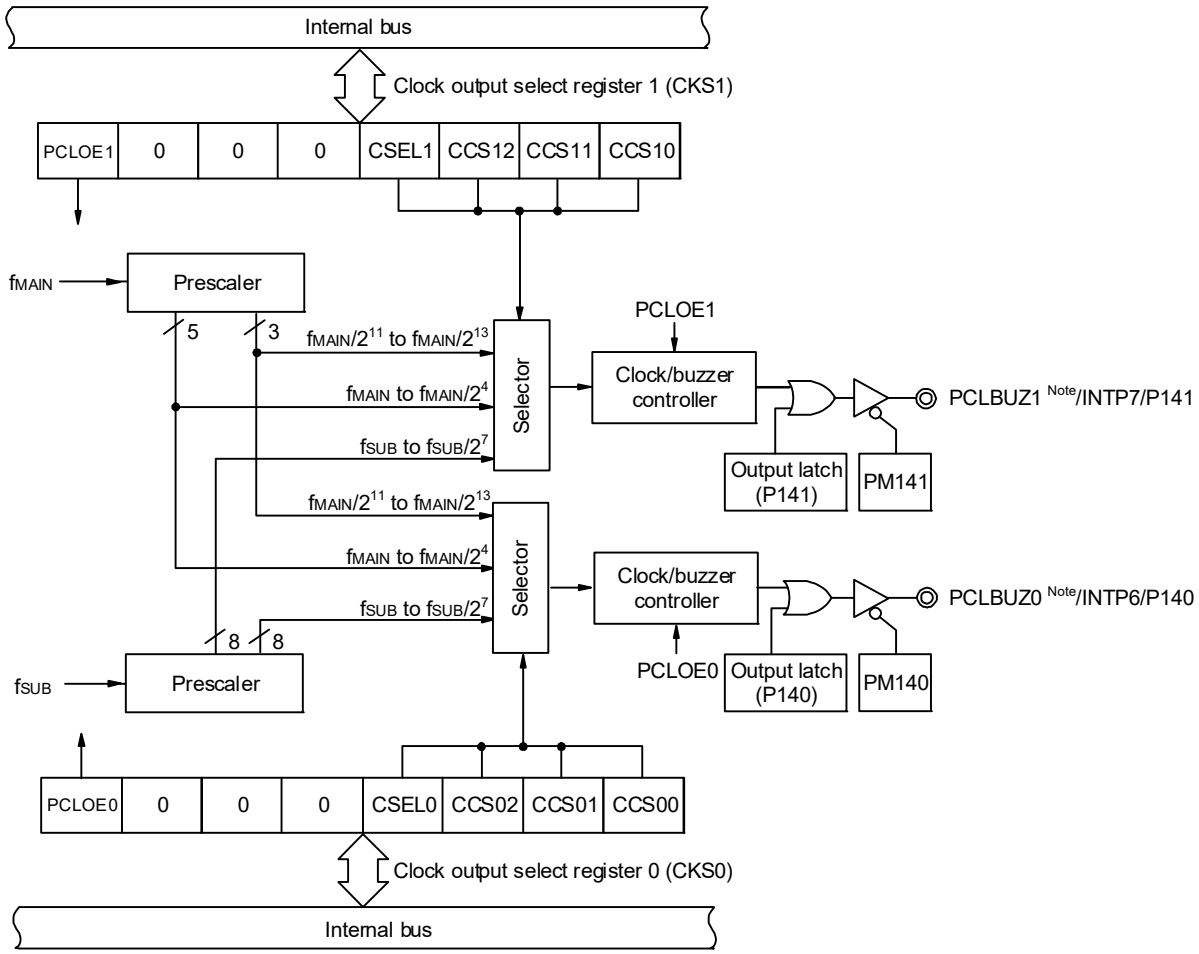

Note For output frequencies available from PCLBUZ0 and PCLBUZ1, refer to **37.4** or **38.4 AC Characteristics**.

Remark The clock output/buzzer output pins in above diagram shows the information of 64-pin products with PIOR3 = 0 and PIOR4 = 0.

13.2 Configuration of Clock Output/Buzzer Output Controller

The clock output/buzzer output controller includes the following hardware.

Table 13 - 1 Configuration of Clock Output/Buzzer Output Controller

Item	Configuration
Control registers	Clock output select registers n (CKSn) Port mode registers 1, 3, 5, 14 (PM1, PM3, PM5, PM14) Port registers 3, 5, 14 (P3, P5, P14)

13.3 Registers Controlling Clock Output/Buzzer Output Controller

13.3.1 Clock output select registers n (CKSn)

These registers set output enable/disable for clock output or for the buzzer frequency output pin (PCLBUZn), and set the output clock.

Select the clock to be output from the PCLBUZn pin by using the CKSn register.

The CKSn register are set by a 1-bit or 8-bit memory manipulation instruction.

Reset signal generation clears these registers to 00H.

Figure 13 - 2 Format of Clock output select registers n (CKSn)

Address: FFFA5H (CKS0), FFFA6H (CKS1) After reset: 00H R/W

Symbol	7	6	5	4	3	2	1	0
CKSn	PCLOEn	0	0	0	CSELn	CCSn2	CCSn1	CCSn0

PCLOEn	PCLBUZn pin output enable/disable specification
0	Output disable (default)
1	Output enable

CSELn	CCSn2	CCSn1	CCSn0	PCLBUZn pin output clock selection				
					f_{MAIN} = 5 MHz	f_{MAIN} = 10 MHz	f_{MAIN} = 20 MHz	f_{MAIN} = 32 MHz
0	0	0	0	f_{MAIN}	5 MHz	10 MHz Note	Setting prohibited Note	Setting prohibited Note
0	0	0	1	$f_{MAIN}/2$	2.5 MHz	5 MHz	10 MHz Note	16 MHz Note
0	0	1	0	$f_{MAIN}/2^2$	1.25 MHz	2.5 MHz	5 MHz	8 MHz
0	0	1	1	$f_{MAIN}/2^3$	625 kHz	1.25 MHz	2.5 MHz	4 MHz
0	1	0	0	$f_{MAIN}/2^4$	312.5 kHz	625 kHz	1.25 MHz	2 MHz
0	1	0	1	$f_{MAIN}/2^{11}$	2.44 kHz	4.88 kHz	9.77 kHz	15.63 kHz
0	1	1	0	$f_{MAIN}/2^{12}$	1.22 kHz	2.44 kHz	4.88 kHz	7.81 kHz
0	1	1	1	$f_{MAIN}/2^{13}$	610 Hz	1.22 kHz	2.44 kHz	3.91 kHz
1	0	0	0	f_{SUB}	32.768 kHz			
1	0	0	1	$f_{SUB}/2$	16.384 kHz			
1	0	1	0	$f_{SUB}/2^2$	8.192 kHz			
1	0	1	1	$f_{SUB}/2^3$	4.096 kHz			
1	1	0	0	$f_{SUB}/2^4$	2.048 kHz			
1	1	0	1	$f_{SUB}/2^5$	1.024 kHz			
1	1	1	0	$f_{SUB}/2^6$	512 Hz			
1	1	1	1	$f_{SUB}/2^7$	256 Hz			

Note Use the output clock within a range of 16 MHz. See **37.4** or **38.4 AC Characteristics** for details.

Caution 1. Change the output clock after disabling clock output (PCLOEn = 0).

Caution 2. To shift to STOP mode when the main system clock is selected (CSELn = 0), set PCLOEn = 0 before executing the STOP instruction. When the subsystem clock is selected (CSELn = 1), PCLOEn = 1 can be set because the clock can be output while RTCLPC in the subsystem clock supply mode control register (OSMC) = 0 in STOP mode.

Caution 3. In HALT mode when RTCLPC in the subsystem clock supply mode control register (OSMC) = 1 and while the subsystem clock (f_{SUB}) is used for CPU operation, it is not possible to output the subsystem clock (f_{SUB}) from the PCLBUZn pin.

Remark 1. n = 0, 1

Remark 2. f_{MAIN}: Main system clock frequency
f_{SUB}: Subsystem clock frequency

13.3.2 Registers controlling port functions of pins to be used for clock or buzzer output

Using a port pin for clock or buzzer output requires setting of the registers that control the port functions multiplexed on the target pin (port mode register (PMxx), port register (Pxx)). For details, see **4.3.1 Port mode registers (PMxx)** and **4.3.2 Port registers (Pxx)**.

Specifically, using a port pin with a multiplexed clock or buzzer output function (e.g. P140/INTP6/PCLBUZ0, P141/INTP7/PCLBUZ1) for clock or buzzer output, requires setting the corresponding bits in the port mode register (PMxx) and port register (Pxx) to 0.

Example: When P140/INTP6/PCLBUZ0 is to be used for clock or buzzer output
Set the PM140 bit of port mode register 14 to 0.
Set the P140 bit of port register 14 to 0.

13.4 Operations of Clock Output/Buzzer Output Controller

One pin can be used to output a clock or buzzer sound.

The PCLBUZ0 pin outputs a clock/buzzer selected by the clock output select register 0 (CKS0).

The PCLBUZ1 pin outputs a clock/buzzer selected by the clock output select register 1 (CKS1).

13.4.1 Operation as output pin

The PCLBUZn pin is output as the following procedures.

<1> Set 0 in the bit of the port mode register (PMxx) and port register (Pxx) which correspond to the port which has a pin used as the PCLBUZ0 pin.

<2> Select the output frequency with bits 0 to 3 (CCSn0 to CCSn2, CSELn) of the clock output select register (CKSn) of the PCLBUZn pin (output in disabled status).

<3> Set bit 7 (PCLOEn) of the CKSn register to 1 to enable clock/buzzer output.

Remark 1. The controller used for outputting the clock starts or stops outputting the clock one clock after enabling or disabling clock output (PCLOEn bit) is switched. At this time, pulses with a narrow width are not output. Figure 13 - 3 shows enabling or stopping output using the PCLOEn bit and the timing of outputting the clock.

Remark 2. n = 0, 1

Figure 13 - 3 Timing of Outputting Clock from PCLBUZn Pin

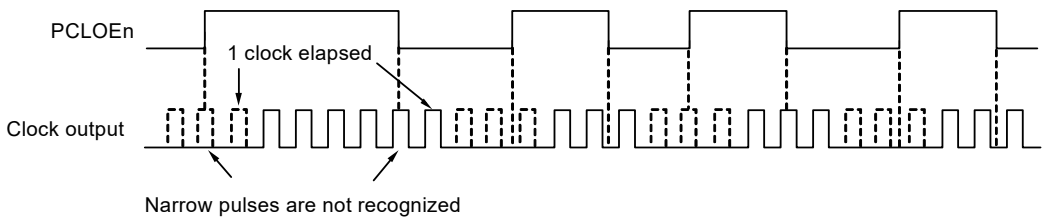

13.5 Cautions of clock output/buzzer output controller

When the main system clock is selected for the PCLBUZn output (CSEL = 0), if STOP mode is entered within 1.5 clock cycles output from the PCLBUZn pin after the output is disabled (PCLOEn = 0), the PCLBUZn output width becomes shorter.

CHAPTER 14 WATCHDOG TIMER

14.1 Functions of Watchdog Timer

The counting operation of the watchdog timer is set by the option byte (000C0H).
The watchdog timer operates on the low-speed on-chip oscillator clock (f_{IL}).
The watchdog timer is used to detect an inadvertent program loop. If a program loop is detected, an internal reset signal is generated.
Program loop is detected in the following cases.

- If the watchdog timer counter overflows
- If a 1-bit manipulation instruction is executed on the watchdog timer enable register (WDTE)
- If data other than “ACH” is written to the WDTE register
- If data is written to the WDTE register during a window close period

When a reset occurs due to the watchdog timer, bit 4 (WDTRF) of the reset control flag register (RESF) is set to 1.
For details of the RESF register, see **CHAPTER 27 RESET FUNCTION**.
When 75% + 1/2 f_{IL} of the overflow time is reached, an interval interrupt can be generated.

14.2 Configuration of Watchdog Timer

The watchdog timer includes the following hardware.

Table 14 - 1 Configuration of Watchdog Timer

Item	Configuration
Counter	Internal counter (17 bits)
Control register	Watchdog timer enable register (WDTE)

How the counter operation is controlled, overflow time, window open period, and interval interrupt are set by the option byte.

Table 14 - 2 Setting of Option Bytes and Watchdog Timer

Setting of Watchdog Timer	Option Byte (000C0H)
Watchdog timer interval interrupt	Bit 7 (WDTINT)
Window open period	Bits 6 and 5 (WINDOW1, WINDOW0)
Controlling counter operation of watchdog timer	Bit 4 (WDTON)
Overflow time of watchdog timer	Bits 3 to 1 (WDCS2 to WDCS0)
Controlling counter operation of watchdog timer (in HALT/STOP mode)	Bit 0 (WDSTBYON)

Remark For the option byte, see **CHAPTER 32 OPTION BYTE**.

Figure 14 - 1 Block Diagram of Watchdog Timer

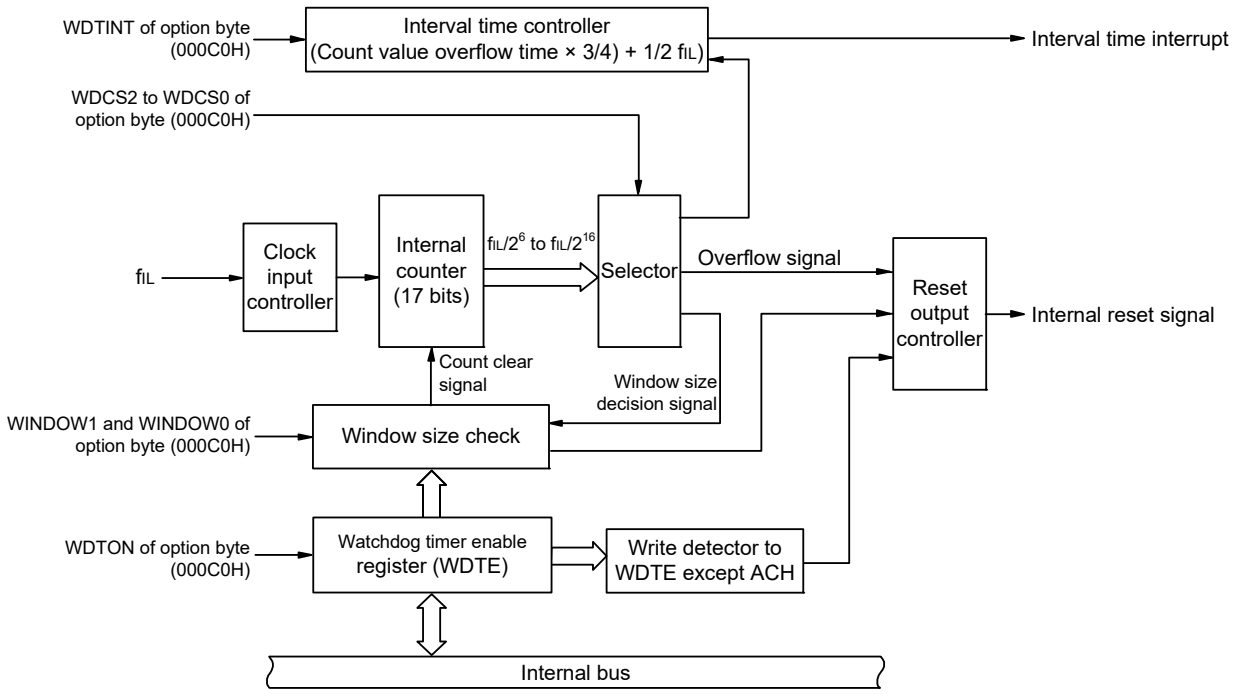

Remark f_{IL}: Low-speed on-chip oscillator clock

14.3 Register Controlling Watchdog Timer

The watchdog timer is controlled by the watchdog timer enable register (WDTE).

14.3.1 Watchdog timer enable register (WDTE)

Writing “ACH” to the WDTE register clears the watchdog timer counter and starts counting again.

This register can be set by an 8-bit memory manipulation instruction.

Reset signal generation sets this register to 9AH or 1AH Note.

Figure 14 - 2 Format of Watchdog timer enable register (WDTE)

Address: FFFABH After reset: 9AH/1AH Note R/W

Symbol	7	6	5	4	3	2	1	0
WDTE								

Note The WDTE register reset value differs depending on the WDTON bit setting value of the option byte (000C0H). To operate watchdog timer, set the WDTON bit to 1.

WDTON Bit Setting Value	WDTE Register Reset Value
0 (watchdog timer count operation disabled)	1AH
1 (watchdog timer count operation enabled)	9AH

Caution 1. If a value other than “ACH” is written to the WDTE register, an internal reset signal is generated.

Caution 2. If a 1-bit memory manipulation instruction is executed for the WDTE register, an internal reset signal is generated.

Caution 3. The value read from the WDTE register is 9AH/1AH (this differs from the written value (ACH)).

14.4 Operation of Watchdog Timer

14.4.1 Controlling operation of watchdog timer

1. When the watchdog timer is used, its operation is specified by the option byte (000C0H).

• Enable counting operation of the watchdog timer by setting bit 4 (WDTON) of the option byte (000C0H) to 1 (the counter starts operating after a reset release) (for details, see **CHAPTER 32**).

WDTON	Watchdog Timer Counter
0	Counter operation disabled (counting stopped after reset)
1	Counter operation enabled (counting started after reset)

• Set an overflow time by using bits 3 to 1 (WDCS2 to WDCS0) of the option byte (000C0H) (for details, see **14.4.2** and **CHAPTER 32**).
• Set a window open period by using bits 6 and 5 (WINDOW1 and WINDOW0) of the option byte (000C0H) (for details, see **14.4.3** and **CHAPTER 32**).

2. After a reset release, the watchdog timer starts counting.
3. By writing “ACH” to the watchdog timer enable register (WDTE) after the watchdog timer starts counting and before the overflow time set by the option byte, the watchdog timer is cleared and starts counting again.
4. After that, write the WDTE register the second time or later after a reset release during the window open period. If the WDTE register is written during a window close period, an internal reset signal is generated.
5. If the overflow time expires without “ACH” written to the WDTE register, an internal reset signal is generated.
   An internal reset signal is generated in the following cases.

• If a 1-bit manipulation instruction is executed on the WDTE register
• If data other than “ACH” is written to the WDTE register

Caution 1. When data is written to the watchdog timer enable register (WDTE) for the first time after reset release, the watchdog timer is cleared in any timing regardless of the window open time, as long as the register is written before the overflow time, and the watchdog timer starts counting again.
Caution 2. After “ACH” is written to the WDTE register, an error of up to 2 clocks (f_{IL}) may occur before the watchdog timer is cleared.
Caution 3. The watchdog timer can be cleared immediately before the count value overflows.

Caution 4. The operation of the watchdog timer in the HALT and STOP modes differs as follows depending on the set value of bit 0 (WDSTBYON) of the option byte (000C0H).

	WDSTBYON = 0	WDSTBYON = 1
In HALT mode	Watchdog timer operation stops.	Watchdog timer operation continues.
In STOP mode		
In SNOOZE mode		

If WDSTBYON = 0, the watchdog timer resumes counting after the HALT or STOP mode is released. At this time, the counter is cleared to 0 and counting starts.
When operating with the X1 oscillation clock after releasing the STOP mode, the CPU starts operating after the oscillation stabilization time has elapsed.
Therefore, if the period between the STOP mode release and the watchdog timer overflow is short, an overflow occurs during the oscillation stabilization time, causing a reset.
Consequently, set the overflow time in consideration of the oscillation stabilization time when operating with the X1 oscillation clock and when the watchdog timer is to be cleared after the STOP mode release by an interval interrupt.

14.4.2 Setting overflow time of watchdog timer

Set the overflow time of the watchdog timer by using bits 3 to 1 (WDCS2 to WDCS0) of the option byte (000C0H).

If an overflow occurs, an internal reset signal is generated. The present count is cleared and the watchdog timer starts counting again by writing “ACH” to the watchdog timer enable register (WDTE) during the window open period before the overflow time.

The following overflow times can be set.

Table 14 - 3 Setting of Overflow Time of Watchdog Timer

WDCS2	WDCS1	WDCS0	Overflow Time of Watchdog Timer (f_{IL} = 17.25 kHz (MAX.))
0	0	0	$2^6/f_{IL}$ (3.71 ms)
0	0	1	$2^7/f_{IL}$ (7.42 ms)
0	1	0	$2^8/f_{IL}$ (14.84 ms)
0	1	1	$2^9/f_{IL}$ (29.68 ms)
1	0	0	$2^{11}/f_{IL}$ (118.72 ms)
1	0	1	$2^{13}/f_{IL}$ (474.89 ms)Note
1	1	0	$2^{14}/f_{IL}$ (949.79 ms)Note
1	1	1	$2^{16}/f_{IL}$ (3799.18 ms)Note

Note Using the watchdog timer under the following conditions may lead to the generation of an interval interrupt (INTWDTI) after one cycle of the watchdog timer clock once the watchdog timer counter has been cleared.

Usage conditions that may lead to the generation of an interval interrupt:
- The overflow time of the watchdog timer is set to 213/f_{IL}, 214/f_{IL}, or 216/f_{IL}.
- The interval interrupt is in use (the setting of the WDTINT bit of the relevant option byte is 1).
- ACH is written to the WDTE register (FFFABH) when the watchdog timer counter has reached or exceeded 75% of the overflow time.

This interrupt can be masked by clearing the watchdog timer counter through steps 1 to 5 below.
1. Set the WDTIMK bit of the interrupt mask flag register 0 (MK0L) to 1 before clearing the watchdog timer counter.
2. Clear the watchdog timer counter.
3. Wait for at least 80 μs.
4. Clear the WDTIIF bit of the interrupt request flag register (IF0L) to 0.
5. Clear the WDTIMK bit of the interrupt mask flag register 0 (MK0L) to 0.

Remark f_{IL}: Low-speed on-chip oscillator clock frequency

14.4.3 Setting window open period of watchdog timer

Set the window open period of the watchdog timer by using bits 6 and 5 (WINDOW1, WINDOW0) of the option byte (000C0H). The outline of the window is as follows.

- If “ACH” is written to the watchdog timer enable register (WDTE) during the window open period, the watchdog timer is cleared and starts counting again.
- Even if “ACH” is written to the WDTE register during the window close period, an abnormality is detected and an internal reset signal is generated.

Example: If the window open period is 50%

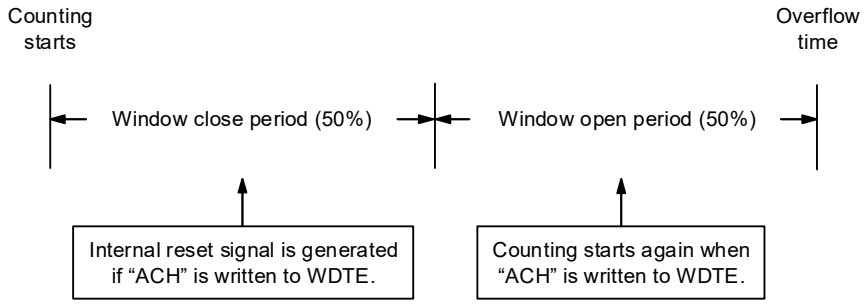

Caution **When data is written to the WDTE register for the first time after reset release, the watchdog timer is cleared in any timing regardless of the window open time, as long as the register is written before the overflow time, and the watchdog timer starts counting again.**

The window open period can be set is as follows.

Table 14 - 4 Setting Window Open Period of Watchdog Timer

WINDOW1	WINDOW0	Window Open Period of Watchdog Timer
0	0	Setting prohibited
0	1	50%
<R> 1	0	75%Note
1	1	100%

<R> **Note** When the window open period is set to 75%, clearing the counter of the watchdog timer (writing ACH to WDTE) must proceed outside the corresponding period from among those listed below, over which clearing of the counter is prohibited (for example, confirming that the interval timer interrupt request flag (WDTIIF) of the watchdog timer is set).

WDCS2	WDCS1	WDCS0	Watchdog timer overflow time (f_{IL} = 17.25 kHz (MAX.))	Period over which clearing the counter is prohibited when the window open period is set to 75%
0	0	0	$2^6/f_{IL}$ (3.71 ms)	1.85 ms to 2.51 ms
0	0	1	$2^7/f_{IL}$ (7.42 ms)	3.71 ms to 5.02 ms
0	1	0	$2^8/f_{IL}$ (14.84 ms)	7.42 ms to 10.04 ms
0	1	1	$2^9/f_{IL}$ (29.68 ms)	14.84 ms to 20.08 ms
1	0	0	$2^{11}/f_{IL}$ (118.72 ms)	56.36 ms to 80.32 ms
1	0	1	$2^{13}/f_{IL}$ (474.89 ms)	237.44 ms to 321.26 ms
1	1	0	$2^{14}/f_{IL}$ (949.79 ms)	474.89 ms to 642.51 ms
1	1	1	$2^{16}/f_{IL}$ (3799.18 ms)	1899.59 ms to 2570.04 ms

Caution **When bit 0 (WDSTBYON) of the option byte (000C0H) = 0, the window open period is 100% regardless of the values of the WINDOW1 and WINDOW0 bits.**

Remark If the overflow time is set to $2^9/f_{IL}$, the window close time and open time are as follows.

	Setting of Window Open Period		
	50%	75%	100%
Window close time	0 to 20.08 ms	0 to 10.04 ms	None
Window open time	20.08 to 29.68 ms	10.04 to 29.68 ms	0 to 29.68 ms

<When window open period is 50%>

- Overflow time:
  $2^9/f_{IL}$ (MAX.) = 2^9/17.25 kHz (MAX.) = 29.68 ms
- Window close time:
  0 to $2^9/f_{IL}$ (MIN.) × (1 - 0.5) = 0 to 2^9/12.75 kHz × 0.5 = 0 to 20.08 ms
- Window open time:
  $2^9/f_{IL}$ (MIN.) × (1 - 0.5) to $2^9/f_{IL}$ (MAX.) = 2^9/12.75 kHz × 0.5 to 2^9/17.25 kHz = 20.08 to 29.68 ms

14.4.4 Setting watchdog timer interval interrupt

Setting bit 7 (WDTINT) of an option byte (000C0H) can generate an interval interrupt (INTWDTI) when 75% + 1/2 f_{IL} of the overflow time is reached.

Table 14 - 5 Setting of Watchdog Timer Interval Interrupt

WDTINT	Use of Watchdog Timer Interval Interrupt
0	Interval interrupt is not used.
1	Interval interrupt is generated when 75% + 1/2 f_{IL} of overflow time is reached.

Caution **When operating with the X1 oscillation clock after releasing the STOP mode, the CPU starts operating after the oscillation stabilization time has elapsed.**
Therefore, if the period between the STOP mode release and the watchdog timer overflow is short, an overflow occurs during the oscillation stabilization time, causing a reset.
Consequently, set the overflow time in consideration of the oscillation stabilization time when operating with the X1 oscillation clock and when the watchdog timer is to be cleared after the STOP mode release by an interval interrupt.

Remark The watchdog timer continues counting even after INTWDTI is generated (until ACH is written to the watchdog timer enable register (WDTE)). If ACH is not written to the WDTE register before the overflow time, an internal reset signal is generated.

CHAPTER 15 A/D CONVERTER

The number of analog input channels of the A/D converter differs, depending on the product.

	24-pin	32-pin	36-pin	48, 64-pin
Analog input channels	8ch (ANI0 to ANI2, ANI16 to ANI18, ANI20, ANI21)	13ch (ANI0 to ANI3, ANI16 to ANI24)	15ch (ANI0 to ANI5, ANI16 to ANI24)	17ch (ANI0 to ANI7, ANI16 to ANI24)

15.1 Function of A/D Converter

The A/D converter is a converter that converts analog input signals into digital values, and is configured to control analog inputs, including up to 17 channels of A/D converter analog inputs (ANI0 to ANI7 and ANI16 to ANI24). 10-bit or 8-bit resolution can be selected by the ADTYP bit of the A/D converter mode register 2 (ADM2).
The A/D converter has the following function.

- 10-bit or 8-bit resolution A/D conversion
  10-bit or 8-bit resolution A/D conversion is carried out repeatedly for one analog input channel selected from ANI0 to ANI7 and ANI16 to ANI24. Each time an A/D conversion operation ends, an interrupt request (INTAD) is generated (when in the select mode).0

Various A/D conversion modes can be specified by using the mode combinations below.

Trigger mode	Software trigger	Conversion is started by software.
	Hardware trigger no-wait mode	Conversion is started by detecting a hardware trigger.
	Hardware trigger wait mode	The power is turned on by detecting a hardware trigger while the system is off and in the conversion standby state, and conversion is then started automatically after the stabilization wait time passes. When using the SNOOZE mode function, specify the hardware trigger wait mode.
Channel selection mode	Select mode	A/D conversion is performed on the analog input of one selected channel.
	Scan mode	A/D conversion is performed on the analog input of four channels in order. Four consecutive channels can be selected from ANI0 to ANI14 as analog input channels.
Conversion operation mode	One-shot conversion mode	A/D conversion is performed on the selected channel once.
	Sequential conversion mode	A/D conversion is sequentially performed on the selected channels until it is stopped by software.
Operation voltage mode	Standard 1 or standard 2 mode	Conversion is done in the operation voltage range of 2.7 V ≤ V_{DD} ≤ 5.5 V.
	Low voltage 1 or low voltage 2 mode	Conversion is done in the operation voltage range of 1.6 V ≤ V_{DD} ≤ 5.5 V. Select this mode for conversion at a low voltage. Because the operation voltage is low, it is internally boosted during conversion.
Sampling time selection	Sampling clock cycles: 7 f_{AD}	The sampling time in standard 1 or low voltage 1 mode is seven cycles of the conversion clock (f_{AD}). Select this mode when the output impedance of the analog input source is high and the sampling time should be long.
	Sampling clock cycles: 5 f_{AD}	The sampling time in standard 2 or low voltage 2 mode is five cycles of the conversion clock (f_{AD}). Select this mode when enough sampling time is ensured (for example, when the output impedance of the analog input source is low).

Figure 15 - 1 Block Diagram of A/D Converter

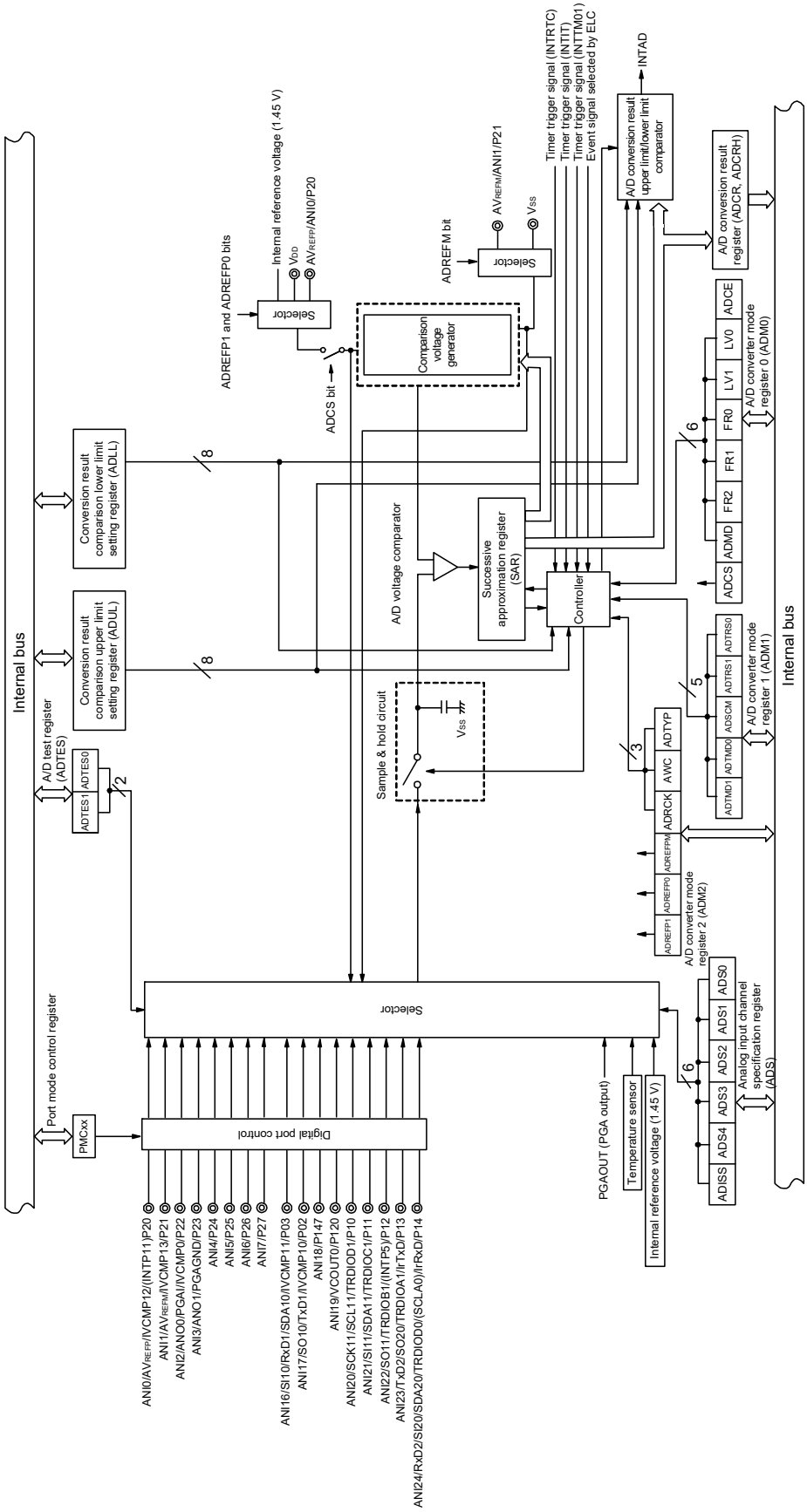

Remark Analog input pin for Figure 15 - 1 when a 64-pin product is used.

15.2 Configuration of A/D Converter

The A/D converter includes the following hardware.

(1) ANI0 to ANI7 and ANI16 to ANI24 pins

These are the analog input pins of the 17 channels of the A/D converter. They input analog signals to be converted into digital signals. Pins other than the one selected as the analog input pin can be used as I/O port pins.

(2) Sample & hold circuit

The sample & hold circuit samples each of the analog input voltages sequentially sent from the input circuit, and sends them to the A/D voltage comparator. This circuit also holds the sampled analog input voltage during A/D conversion.

(3) A/D voltage comparator

This A/D voltage comparator compares the voltage generated from the voltage tap of the comparison voltage generator with the analog input voltage. If the analog input voltage is found to be greater than the reference voltage (1/2 AV_{REF}) as a result of the comparison, the most significant bit (MSB) of the successive approximation register (SAR) is set. If the analog input voltage is less than the reference voltage (1/2 AV_{REF}), the MSB bit of the SAR is reset.

After that, bit 8 of the SAR register is automatically set, and the next comparison is made. The voltage tap of the comparison voltage generator is selected by the value of bit 9, to which the result has been already set.

Bit 9 = 0: (1/4 AV_{REF})
Bit 9 = 1: (3/4 AV_{REF})

The voltage tap of the comparison voltage generator and the analog input voltage are compared and bit 8 of the SAR register is manipulated according to the result of the comparison.

Analog input voltage ≥ Voltage tap of comparison voltage generator: Bit 8 = 1
Analog input voltage ≤ Voltage tap of comparison voltage generator: Bit 8 = 0

Comparison is continued like this to bit 0 of the SAR register.

When performing A/D conversion at a resolution of 8 bits, the comparison continues until bit 2 of the SAR register.

Remark AV_{REF}: The + side reference voltage of the A/D converter. This can be selected from AV_{REFP}, the internal reference voltage (1.45 V), and V_{DD}.

(4) Comparison voltage generator

The comparison voltage generator generates the comparison voltage input from an analog input pin.

(5) Successive approximation register (SAR)

The SAR register is a register that sets voltage tap data whose values from the comparison voltage generator match the voltage values of the analog input pins, 1 bit at a time starting from the most significant bit (MSB).

If data is set in the SAR register all the way to the least significant bit (LSB) (end of A/D conversion), the contents of the SAR register (conversion results) are held in the A/D conversion result register (ADCR). When all the specified A/D conversion operations have ended, an A/D conversion end interrupt request signal (INTAD) is generated.

(6) 10-bit A/D conversion result register (ADCR)

The A/D conversion result is loaded from the successive approximation register to this register each time A/D conversion is completed, and the ADCR register holds the A/D conversion result in its higher 10 bits (the lower 6 bits are fixed to 0).

(7) 8-bit A/D conversion result register (ADCRH)

The A/D conversion result is loaded from the successive approximation register to this register each time A/D conversion is completed, and the ADCRH register stores the higher 8 bits of the A/D conversion result.

(8) Controller

This circuit controls the conversion time of an input analog signal that is to be converted into a digital signal, as well as starting and stopping of the conversion operation. When A/D conversion has been completed, this controller generates INTAD through the A/D conversion result upper limit/lower limit comparator.

(9) AV_{REFP} pin

This pin inputs an external reference voltage (AV_{REFP}).

If using AV_{REFP} as the + side reference voltage of the A/D converter, set the ADREFP1 and ADREFP0 bits of A/D converter mode register 2 (ADM2) to 0 and 1, respectively.

The analog signals input to ANI2 to ANI7 and ANI16 to ANI24 are converted to digital signals based on the voltage applied between AV_{REFP} and the – side reference voltage (AV_{REFM}/V_{SS}).

In addition to AV_{REFP}, it is possible to select V_{DD} or the internal reference voltage (1.45 V) as the + side reference voltage of the A/D converter.

(10) AV_{REFM} pin

This pin inputs an external reference voltage (AV_{REFM}). If using AV_{REFM} as the - side reference voltage of the A/D converter, set the ADREFM bit of the ADM2 register to 1.

In addition to AV_{REFM}, it is possible to select V_{SS} as the – side reference voltage of the A/D converter.

15.3 Registers Controlling A/D Converter

The A/D converter is controlled by the following registers.

- Peripheral enable register 0 (PER0)
- A/D converter mode register 0 (ADM0)
- A/D converter mode register 1 (ADM1)
- A/D converter mode register 2 (ADM2)
- 10-bit A/D conversion result register (ADCR)
- 8-bit A/D conversion result register (ADCRH)
- Analog input channel specification register (ADS)
- Conversion result comparison upper limit setting register (ADUL)
- Conversion result comparison lower limit setting register (ADLL)
- A/D test register (ADTES)
- Port mode control registers 0 to 2, 12, and 14 (PMC0 to PMC2, PMC12, PMC14)
- Port mode registers 0 to 2, 12, and 14 (PM0 to PM2, PM12, PM14)

15.3.1 Peripheral enable register 0 (PER0)

This register is used to enable or disable supplying the clock to the peripheral hardware. Clock supply to a hardware macro that is not used is stopped in order to reduce the power consumption and noise.

When the A/D converter is used, be sure to set bit 5 (ADCEN) of this register to 1.

The PER0 register can be set by a 1-bit or 8-bit memory manipulation instruction.

Reset signal generation clears this register to 00H.

Figure 15 - 2 Format of Peripheral enable register 0 (PER0)

Address: F00F0H After reset: 00H R/W

Symbol	7	6	5	4	3	2	1	0
PER0	RTCEN	IRDAEN	ADCEN	IICA0EN	SAU1EN	SAU0EN	0	TAU0EN

ADCEN	Control of A/D converter input clock supply
0	Stops input clock supply. • SFR used by the A/D converter cannot be written. • The A/D converter is in the reset status.
1	Enables input clock supply. • SFR used by the A/D converter can be read/written.

Caution 1. When setting the A/D converter, be sure to set the following registers first while the ADCEN bit is set to 1.
If ADCEN = 0, the values of the A/D converter control registers are cleared to their initial values and writing to them is ignored (except for port mode registers 0 to 2, 12, and 14 (PM0 to PM2, PM12, PM14) and port mode control registers 0 to 2, 12, and 14 (PMC0 to PMC2, PMC12, PMC14)).
- **A/D converter mode register 0 (ADM0)**
- **A/D converter mode register 1 (ADM1)**
- **A/D converter mode register 2 (ADM2)**
- **10-bit A/D conversion result register (ADCR)**
- **8-bit A/D conversion result register (ADCRH)**
- **Analog input channel specification register (ADS)**
- **Conversion result comparison upper limit setting register (ADUL)**
- **Conversion result comparison lower limit setting register (ADLL)**
- **A/D test register (ADTES)**

Caution 2. Be sure to clear bit 1 to “0”.

15.3.2 A/D converter mode register 0 (ADM0)

This register sets the conversion time for analog input to be A/D converted, and starts/stops conversion.
The ADM0 register can be set by a 1-bit or 8-bit memory manipulation instruction.
Reset signal generation clears this register to 00H.

Figure 15 - 3 Format of A/D converter mode register 0 (ADM0)

Address: FFF30H After reset: 00H R/W

Symbol	7	6	5	4	3	2	1	0
ADM0	ADCS	ADMD	FR2[Note 1]	FR1[Note 1]	FR0[Note 1]	LV1[Note 1]	LV0[Note 1]	ADCE

ADCS	A/D conversion operation control
0	Stops conversion operation [When read] Conversion stopped/standby status
1	Enables conversion operation [When read] While in the software trigger mode: Conversion operation status While in the hardware trigger wait mode: A/D power supply stabilization wait status + conversion operation status

ADMD	Specification of the A/D conversion channel selection mode
0	Select mode
1	Scan mode

ADCE	A/D voltage comparator operation control [Note 2]
0	Stops A/D voltage comparator operation
1	Enables A/D voltage comparator operation

Note 1. For details of the FR2 to FR0, LV1, LV0 bits, and A/D conversion, see **Tables 15 - 3** to **15 - 6 A/D Conversion Time Selection**.

Note 2. While in the software trigger mode or hardware trigger no-wait mode, the operation of the A/D voltage comparator is controlled by the ADCS and ADCE bits, and it takes 1 μs from the start of operation for the operation to stabilize. Therefore, when the ADCS bit is set to 1 after 1 μs or more has elapsed from the time ADCE bit is set to 1, the conversion result at that time has priority over the first conversion result. Otherwise, ignore data of the first conversion.

Caution 1. Change the ADMD, FR2 to FR0, LV1, and LV0 bits while conversion is stopped (ADCS = 0, ADCE = 0).

Caution 2. Do not set the ADCS bit to 1 and the ADCE bit to 0 at the same time.

Caution 3. Do not change the ADCS and ADCE bits from 0 to 1 at the same time by using an 8-bit manipulation instruction. Be sure to set these bits in the order described in 15.7 A/D Converter Setup Flowchart.

Table 15 - 1 Settings of ADCS and ADCE Bits

ADCS	ADCE	A/D Conversion Operation
0	0	Conversion stopped state
0	1	Conversion standby state
1	0	Setting prohibited
1	1	Conversion-in-progress state

Table 15 - 2 Setting and Clearing Conditions for ADCS Bit

A/D Conversion Mode			Set Conditions	Clear Conditions
Software trigger	Select mode	Sequential conversion mode	When 1 is written to ADCS	When 0 is written to ADCS
		One-shot conversion mode		• When 0 is written to ADCS • The bit is automatically cleared to 0 when A/D conversion ends.
	Scan mode	Sequential conversion mode		When 0 is written to ADCS
		One-shot conversion mode		• When 0 is written to ADCS • The bit is automatically cleared to 0 when conversion ends on the specified four channels.
Hardware trigger no-wait mode	Select mode	Sequential conversion mode		When 0 is written to ADCS
		One-shot conversion mode		When 0 is written to ADCS
	Scan mode	Sequential conversion mode		When 0 is written to ADCS
		One-shot conversion mode		When 0 is written to ADCS
Hardware trigger wait mode	Select mode	Sequential conversion mode	When a hardware trigger is input	When 0 is written to ADCS
		One-shot conversion mode		• When 0 is written to ADCS • The bit is automatically cleared to 0 when A/D conversion ends.
	Scan mode	Sequential conversion mode		When 0 is written to ADCS
		One-shot conversion mode		• When 0 is written to ADCS • The bit is automatically cleared to 0 when conversion ends on the specified four channels.

Figure 15 - 4 Timing Chart When A/D Voltage Comparator Is Used

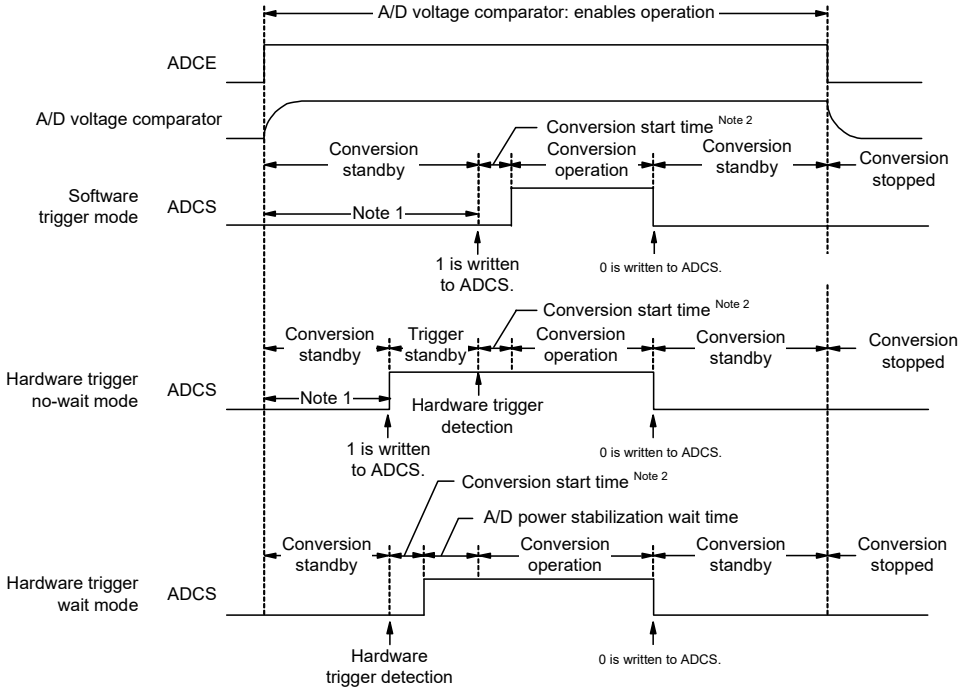

Note 1. While in the software trigger mode or hardware trigger no-wait mode, the time from the rising of the ADCE bit to the falling of the ADCS bit must be 1 μs or longer to stabilize the internal circuit.

Note 2. The following time is the maximum amount of time necessary to start conversion.

ADM0			Conversion Clock (f_{AD})	Conversion Start Time (Number of f_{CLK} Clocks)	
FR2	FR1	FR0		Software trigger mode/ Hardware trigger no wait mode	Hardware trigger wait mode
0	0	0	$f_{CLK}/64$	63	1
0	0	1	$f_{CLK}/32$	31	
0	1	0	$f_{CLK}/16$	15	
0	1	1	$f_{CLK}/8$	7	
1	0	0	$f_{CLK}/6$	5	
1	0	1	$f_{CLK}/5$	4	
1	1	0	$f_{CLK}/4$	3	
1	1	1	$f_{CLK}/2$	1	

However, for the second and subsequent conversion in sequential conversion mode and for conversion of the channel specified by scan 1, 2, and 3 in scan mode, the conversion start time and stabilization wait time for A/D power supply do not occur after a hardware trigger is detected.

Caution 1. If using the hardware trigger wait mode, setting the ADCS bit to 1 is prohibited (but the bit is automatically switched to 1 when the hardware trigger signal is detected). However, it is possible to clear the ADCS bit to 0 to specify the A/D conversion standby status.

Caution 2. While in the one-shot conversion mode of the hardware trigger no-wait mode, the ADCS flag is not automatically cleared to 0 when A/D conversion ends. Instead, 1 is retained.

Caution 3. Only rewrite the value of the ADCE bit when ADCS = 0 (while in the conversion stopped/conversion standby status).

Caution 4. To complete A/D conversion, specify at least the following time as the hardware trigger interval:
Hardware trigger no wait mode: 2 f_{CLK} clock + Conversion start time + A/D conversion time
Hardware trigger wait mode: 2 f_{CLK} clock + Conversion start time + A/D power supply stabilization wait time + A/D conversion time

Remark f_{CLK}: CPU/peripheral hardware clock frequency

Table 15 - 3 A/D Conversion Time Selection (1/4)

(1) When there is no A/D power supply stabilization wait time Normal mode 1, 2 (software trigger mode/hardware trigger no-wait mode)

A/D Converter Mode Register 0 (ADM0)					Mode	Conversion Clock (f_{AD})	Number of Conversion Clock[Note]	Conversion Time	Conversion Time at 10-Bit Resolution				
									2.7 V ≤ V_{DD} ≤ 5.5 V				
FR2	FR1	FR0	LV1	LV0					f_{CLK} = 1 MHz	f_{CLK} = 4 MHz	f_{CLK} = 8 MHz	f_{CLK} = 16 MHz	f_{CLK} = 32 MHz
0	0	0	0	0	Normal 1	f_{CLK}/64	19 f_{AD} (number of sampling clock: 7 f_{AD})	1216/f_{CLK}	Setting prohibited	Setting prohibited	Setting prohibited	76 µs	38 µs
0	0	1				f_{CLK}/32		608/f_{CLK}			76 µs	38 µs	19 µs
0	1	0				f_{CLK}/16		304/f_{CLK}		76 µs	38 µs	19 µs	9.5 µs
0	1	1				f_{CLK}/8		152/f_{CLK}		38 µs	19 µs	9.5 µs	4.75 µs
1	0	0				f_{CLK}/6		114/f_{CLK}		28.5 µs	14.25 µs	7.125 µs	3.5625 µs
1	0	1				f_{CLK}/5		95/f_{CLK}	95 µs	23.75 µs	11.875 µs	5.938 µs	2.9688 µs
1	1	0				f_{CLK}/4		76/f_{CLK}	76 µs	19 µs	9.5 µs	4.75 µs	2.375 µs
1	1	1				f_{CLK}/2		38/f_{CLK}	38 µs	9.5 µs	4.75 µs	2.375 µs	Setting prohibited
0	0	0	0	1	Normal 2	f_{CLK}/64	17 f_{AD} (number of sampling clock: 5 f_{AD})	1088/f_{CLK}	Setting prohibited	Setting prohibited	Setting prohibited	68 µs	34 µs
0	0	1				f_{CLK}/32		544/f_{CLK}			68 µs	34 µs	17 µs
0	1	0				f_{CLK}/16		272/f_{CLK}		68 µs	34 µs	17 µs	8.5 µs
0	1	1				f_{CLK}/8		136/f_{CLK}		34 µs	17 µs	8.5 µs	4.25 µs
1	0	0				f_{CLK}/6		102/f_{CLK}		25.5 µs	12.75 µs	6.375 µs	3.1875 µs
1	0	1				f_{CLK}/5		85/f_{CLK}	85 µs	21.25 µs	10.625 µs	5.3125 µs	2.6563 µs
1	1	0				f_{CLK}/4		68/f_{CLK}	68 µs	17 µs	8.5 µs	4.25 µs	2.125 µs
1	1	1				f_{CLK}/2		34/f_{CLK}	34 µs	8.5 µs	4.25 µs	2.125 µs	Setting prohibited

Note These are the numbers of clock cycles when conversion is with 10-bit resolution. When eight-bit resolution is selected, the values are shorter by two cycles of the conversion clock (f_{AD}).

Caution 1. The A/D conversion time must also be within the relevant range of conversion times (t_{CONV}) described in 37.6.1or 38.6.1 A/D converter characteristics.

Caution 2. Rewrite the FR2 to FR0, LV1 and LV0 bits to other than the same data while conversion is stopped (ADCS = 0, ADCE = 0).

Caution 3. The above conversion time does not include conversion state time. Conversion state time add in the first conversion. Select conversion time, taking clock frequency errors into consideration.

Remark f_{CLK}: CPU/peripheral hardware clock frequency

Table 15 - 4 A/D Conversion Time Selection (2/4)

(2) When there is no A/D power supply stabilization wait time Low-voltage mode 1, 2 (software trigger mode/hardware trigger no-wait mode)

A/D Converter Mode Register 0 (ADM0)					Mode	Conversion Clock (f_{AD})	Number of Conversion Clock[Note 4]	Conversion Time	Conversion Time at 10-Bit Resolution				
									1.6 V ≤ V_{DD} ≤ 5.5 V		Note 1	Note 2	Note 3
FR2	FR1	FR0	LV1	LV0					f_{CLK} = 1 MHz	f_{CLK} = 4 MHz	f_{CLK} = 8 MHz	f_{CLK} = 16 MHz	f_{CLK} = 32 MHz
0	0	0	1	0	Low-voltage 1	f_{CLK}/64	19 f_{AD} (number of sampling clock: 7 f_{AD})	1216/f_{CLK}	Setting prohibited	Setting prohibited	Setting prohibited	76 µs	38 µs
0	0	1				f_{CLK}/32		608/f_{CLK}			76 µs	38 µs	19 µs
0	1	0				f_{CLK}/16		304/f_{CLK}		76 µs	38 µs	19 µs	9.5 µs
0	1	1				f_{CLK}/8		152/f_{CLK}		38 µs	19 µs	9.5 µs	4.75 µs
1	0	0				f_{CLK}/6		114/f_{CLK}		28.5 µs	14.25 µs	7.125 µs	3.5625 µs
1	0	1				f_{CLK}/5		95/f_{CLK}	95 µs	23.75 µs	11.875 µs	5.938 µs	2.9688 µs
1	1	0				f_{CLK}/4		76/f_{CLK}	76 µs	19 µs	9.5 µs	4.75 µs	2.375 µs
1	1	1				f_{CLK}/2		38/f_{CLK}	38 µs	9.5 µs	4.75 µs	2.375 µs	Setting prohibited
0	0	0	1	1	Low-voltage 2	f_{CLK}/64	17 f_{AD} (number of sampling clock: 5 f_{AD})	1088/f_{CLK}	Setting prohibited	Setting prohibited	Setting prohibited	68 µs	34 µs
0	0	1				f_{CLK}/32		544/f_{CLK}			68 µs	34 µs	17 µs
0	1	0				f_{CLK}/16		272/f_{CLK}		68 µs	34 µs	17 µs	8.5 µs
0	1	1				f_{CLK}/8		136/f_{CLK}		34 µs	17 µs	8.5 µs	4.25 µs
1	0	0				f_{CLK}/6		102/f_{CLK}		25.5 µs	12.75 µs	6.375 µs	3.1875 µs
1	0	1				f_{CLK}/5		85/f_{CLK}	85 µs	21.25 µs	10.625 µs	5.3125 µs	2.6563 µs
1	1	0				f_{CLK}/4		68/f_{CLK}	68 µs	17 µs	8.5 µs	4.25 µs	2.125 µs
1	1	1				f_{CLK}/2		34/f_{CLK}	34 µs	8.5 µs	4.25 µs	2.125 µs	Setting prohibited

Note 1. 1.8 V ≤ V_{DD} ≤ 5.5 V

Note 2. 2.4 V ≤ V_{DD} ≤ 5.5 V

Note 3. 2.7 V ≤ V_{DD} ≤ 5.5 V

Note 4. These are the numbers of clock cycles when conversion is with 10-bit resolution. When eight-bit resolution is selected, the values are shorter by two cycles of the conversion clock (f_{AD}).

Caution 1. The A/D conversion time must also be within the relevant range of conversion times (t_{CONV}) described in 37.6.1or 38.6.1 A/D converter characteristics.

Caution 2. Rewrite the FR2 to FR0, LV1 and LV0 bits to other than the same data while conversion is stopped (ADCS = 0, ADCE = 0).

Caution 3. The above conversion time does not include conversion state time. Conversion state time add in the first conversion. Select conversion time, taking clock frequency errors into consideration.

Remark f_{CLK}: CPU/peripheral hardware clock frequency

Table 15 - 5 A/D Conversion Time Selection (3/4)

(3) When there is A/D power supply stabilization wait time Normal mode 1, 2 (hardware trigger wait mode Note 1)

A/D Converter Mode Register 0 (ADM0)					Mode	Conversion Clock (f_{AD})	Number of A/D Power Supply Stabilization Wait Clock	Number of Conversion Clock Note 2	A/D Power Supply Stabilization Wait Time + Conversion Time	A/D Power Supply Stabilization Wait Time + Conversion Time at 10-Bit Resolution				
										2.7 V ≤ V_{DD} ≤ 5.5 V				
FR2	FR1	FR0	LV1	LV0						f_{CLK} = 1 MHz	f_{CLK} = 4 MHz	f_{CLK} = 8 MHz	f_{CLK} = 16 MHz	f_{CLK} = 32 MHz
0	0	0	0	0	Normal 1	f_{CLK}/64	8 f_{AD}	19 f_{AD} (number of sampling clock: 7 f_{AD})	1728/f_{CLK}	Setting prohibited	Setting prohibited	Setting prohibited	108 µs	54 µs
0	0	1				f_{CLK}/32			864/f_{CLK}			108 µs	54 µs	27 µs
0	1	0				f_{CLK}/16			432/f_{CLK}		108 µs	54 µs	27 µs	13.5 µs
0	1	1				f_{CLK}/8			216/f_{CLK}		54 µs	27 µs	13.5 µs	6.75 µs
1	0	0				f_{CLK}/6			162/f_{CLK}		40.5 µs	20.25 µs	10.125 µs	5.0625 µs
1	0	1				f_{CLK}/5			135/f_{CLK}	135 µs	33.75 µs	16.875 µs	8.4375 µs	4.21875 µs
1	1	0				f_{CLK}/4			108/f_{CLK}	108 µs	27 µs	13.5 µs	6.75 µs	3.375 µs
1	1	1				f_{CLK}/2			54/f_{CLK}	54 µs	13.5 µs	6.75 µs	3.375 µs	Setting prohibited
0	0	0	0	1	Normal 2	f_{CLK}/64	8 f_{AD}	17 f_{AD} (number of sampling clock: 5 f_{AD})	1600/f_{CLK}	Setting prohibited	Setting prohibited	Setting prohibited	100 µs	50 µs
0	0	1				f_{CLK}/32			800/f_{CLK}			100 µs	50 µs	25 µs
0	1	0				f_{CLK}/16			400/f_{CLK}		100 µs	50 µs	25 µs	12.5 µs
0	1	1				f_{CLK}/8			200/f_{CLK}		50 µs	25 µs	12.5 µs	6.25 µs
1	0	0				f_{CLK}/6			150/f_{CLK}		37.5 µs	18.75 µs	9.375 µs	4.6875 µs
1	0	1				f_{CLK}/5			125/f_{CLK}	125 µs	31.25 µs	15.625 µs	7.8125 µs	3.90625 µs
1	1	0				f_{CLK}/4			100/f_{CLK}	100 µs	25 µs	12.5 µs	6.25 µs	3.125 µs
1	1	1				f_{CLK}/2			50/f_{CLK}	50 µs	12.5 µs	6.25 µs	3.125 µs	Setting prohibited

Note 1. For the second and subsequent conversion in sequential conversion mode and for conversion of the channel specified by scan 1, 2, and 3 in scan mode, the conversion start time and stabilization wait time for A/D power supply do not occur after a hardware trigger is detected (see **Table 15 - 3**).

Note 2. These are the numbers of clock cycles when conversion is with 10-bit resolution. When eight-bit resolution is selected, the values are shorter by two cycles of the conversion clock (f_{AD}).

Caution 1. The A/D conversion time must also be within the relevant range of conversion times (t_{CONV}) described in 37.6.1or 38.6.1 A/D converter characteristics.
Note that the conversion time (t_{CONV}) does not include the A/D power supply stabilization wait time.

Caution 2. Rewrite the FR2 to FR0, LV1 and LV0 bits to other than the same data while conversion is stopped (ADCS = 0, ADCE = 0).

Caution 3. The above conversion time does not include conversion state time. Conversion state time add in the first conversion. Select conversion time, taking clock frequency errors into consideration.

Caution 4. When hardware trigger wait mode, specify the conversion time, including the A/D power supply stabilization wait time from the hardware trigger detection.

Remark f_{CLK}: CPU/peripheral hardware clock frequency

Table 15 - 6 A/D Conversion Time Selection (4/4)

(4) When there is A/D power supply stabilization wait time Low-voltage mode 1, 2 (hardware trigger wait mode Note 1)

A/D Converter Mode Register 0 (ADM0)					Mode	Conversion Clock (f_{AD})	Number of A/D Power Supply Stabilization Wait Clock	Number of Conversion Clock Note 5	A/D Power Supply Stabilization Wait Time + Conversion Time	A/D Power Supply Stabilization Wait Time + Conversion Time at 10-Bit Resolution				
										1.6 V ≤ V_{DD} ≤ 5.5 V		Note 2	Note 3	Note 4
FR2	FR1	FR0	LV1	LV0						f_{CLK} = 1 MHz	f_{CLK} = 4 MHz	f_{CLK} = 8 MHz	f_{CLK} = 16 MHz	f_{CLK} = 32 MHz
0	0	0	1	0	Low-voltage1	f_{CLK}/64	2 f_{AD}	19 f_{AD} (number of sampling clock: 7 f_{AD})	1344/f_{CLK}	Setting prohibited	Setting prohibited	Setting prohibited	84 µs	42 µs
0	0	1				f_{CLK}/32			672/f_{CLK}			84 µs	42 µs	21 µs
0	1	0				f_{CLK}/16			336/f_{CLK}		84 µs	42 µs	21 µs	10.5 µs
0	1	1				f_{CLK}/8			168/f_{CLK}		42 µs	21 µs	10.5 µs	5.25 µs
1	0	0				f_{CLK}/6			126/f_{CLK}		31.25 µs	15.75 µs	7.875 µs	3.9375 µs
1	0	1				f_{CLK}/5			105/f_{CLK}	105 µs	26.25 µs	13.125 µs	6.5625 µs	3.238125 µs
1	1	0				f_{CLK}/4			84/f_{CLK}	84 µs	21 µs	10.5 µs	5.25 µs	2.625 µs
1	1	1				f_{CLK}/2			42/f_{CLK}	42 µs	10.5 µs	5.25 µs	2.625 µs	Setting prohibited
0	0	0	1	1	Low-voltage2	f_{CLK}/64	2 f_{AD}	17 f_{AD} (number of sampling clock: 5 f_{AD})	1216/f_{CLK}	Setting prohibited	Setting prohibited	Setting prohibited	76 µs	38 µs
0	0	1				f_{CLK}/32			608/f_{CLK}			76 µs	38 µs	19 µs
0	1	0				f_{CLK}/16			304/f_{CLK}		76 µs	38 µs	19 µs	9.5 µs
0	1	1				f_{CLK}/8			152/f_{CLK}		38 µs	19 µs	9.5 µs	4.75 µs
1	0	0				f_{CLK}/6			114/f_{CLK}		28.5 µs	14.25 µs	7.125 µs	3.5625 µs
1	0	1				f_{CLK}/5			95/f_{CLK}	96 µs	23.75 µs	11.875 µs	5.938 µs	2.9688 µs
1	1	0				f_{CLK}/4			76/f_{CLK}	76 µs	19 µs	9.5 µs	4.75 µs	2.375 µs
1	1	1				f_{CLK}/2			38/f_{CLK}	38 µs	9.5 µs	4.75 µs	2.375 µs	Setting prohibited

Note 1. For the second and subsequent conversion in sequential conversion mode and for conversion of the channel specified by scan 1, 2, and 3 in scan mode, the conversion start time and stabilization wait time for A/D power supply do not occur after a hardware trigger is detected (see **Table 15 - 4**).

Note 2. 1.8 V ≤ V_{DD} ≤ 5.5 V

Note 3. 2.4 V ≤ V_{DD} ≤ 5.5 V

Note 4. 2.7 V ≤ V_{DD} ≤ 5.5 V

Note 5. These are the numbers of clock cycles when conversion is with 10-bit resolution. When eight-bit resolution is selected, the values are shorter by two cycles of the conversion clock (f_{AD}).

Caution 1. The A/D conversion time must also be within the relevant range of conversion times (t_{CONV}) described in 37.6.1or 38.6.1 A/D converter characteristics.
Note that the conversion time (t_{CONV}) does not include the A/D power supply stabilization wait time.

Caution 2. Rewrite the FR2 to FR0, LV1 and LV0 bits to other than the same data while conversion is stopped (ADCS = 0, ADCE = 0).

Caution 3. The above conversion time does not include conversion state time. Conversion state time add in the first conversion. Select conversion time, taking clock frequency errors into consideration.

Caution 4. When hardware trigger wait mode, specify the conversion time, including the A/D power supply stabilization wait time from the hardware trigger detection.

Remark f_{CLK}: CPU/peripheral hardware clock frequency

Figure 15 - 5 A/D Converter Sampling and A/D Conversion Timing (Example for Software Trigger Mode)

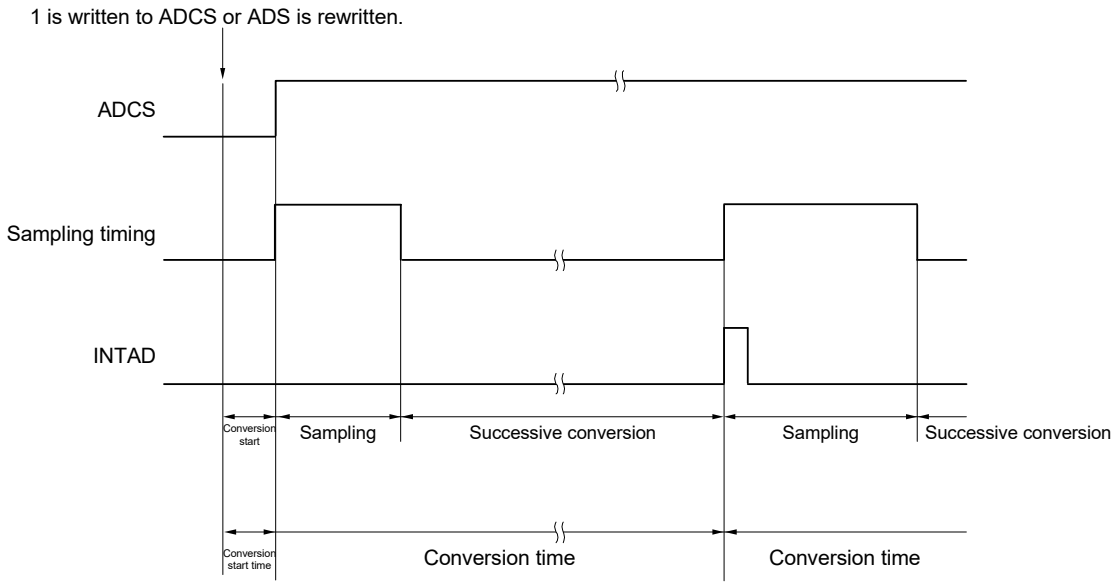

15.3.3 A/D converter mode register 1 (ADM1)

This register is used to specify the A/D conversion trigger, conversion mode, and hardware trigger signal.
The ADM1 register can be set by a 1-bit or 8-bit memory manipulation instruction.
Reset signal generation clears this register to 00H.

Figure 15 - 6 Format of A/D converter mode register 1 (ADM1)

Address: FFF32H After reset: 00H R/W

Symbol	7	6	5	4	3	2	1	0
ADM1	ADTMD1	ADTMD0	ADSCM	0	0	0	ADTRS1	ADTRS0

ADTMD1	ADTMD0	Selection of the A/D conversion trigger mode
0	0	Software trigger mode
0	1	
1	0	Hardware trigger no-wait mode
1	1	Hardware trigger wait mode

ADSCM	Specification of the A/D conversion mode
0	Sequential conversion mode
1	One-shot conversion mode

ADTRS1	ADTRS0	Selection of the hardware trigger signal
0	0	End of timer channel 1 count or capture interrupt signal (INTTM01)
0	1	Event signal selected by ELC
1	0	Real-time clock interrupt signal (INTRTC)
1	1	12-bit interval timer interrupt signal (INTIT)

Caution 1. Rewrite the value of the ADM1 register while conversion is stopped (ADCS = 0, ADCE = 0).

Caution 2. To complete A/D conversion, specify at least the following time as the hardware trigger interval:
Hardware trigger no wait mode: 2 f_{CLK} clock + conversion start time + A/D conversion time
Hardware trigger wait mode: 2 f_{CLK} clock + conversion start time + A/D power supply stabilization wait time + A/D conversion time

Caution 3. In modes other than SNOOZE mode, input of the next INTRTC or INTIT will not be recognized as a valid hardware trigger for up to four f_{CLK} cycles after the first INTRTC or INTIT is input.

Remark f_{CLK}: CPU/peripheral hardware clock frequency

15.3.4 A/D converter mode register 2 (ADM2)

This register is used to select the + side or - side reference voltage of the A/D converter, check the upper limit and lower limit A/D conversion result values, select the resolution, and specify whether to use the SNOOZE mode.

The ADM2 register can be set by a 1-bit or 8-bit memory manipulation instruction.

Reset signal generation clears this register to 00H.

Figure 15 - 7 Format of A/D converter mode register 2 (ADM2) (1/2)

Address: F0010H After reset: 00H R/W

Symbol	7	6	5	4	3	2	1	0
ADM2	ADREFP1	ADREFP0	ADREFM	0	ADRCK	AWC	0	ADTYP

ADREFP1	ADREFP0	Selection of the + side reference voltage source of the A/D converter
0	0	Supplied from V_{DD}
0	1	Supplied from P20/AV_{REFP}/ANI0
1	0	Supplied from the internal reference voltage (1.45 V)Note
1	1	Setting prohibited

- When ADREFP1 or ADREFP0 bit is rewritten, this must be configured in accordance with the following procedures.

(1) Set ADCE = 0
(2) Change the values of ADREFP1 and ADREFP0
(3) Reference voltage stabilization wait time (A)
(4) Set ADCE = 1
(5) Reference voltage stabilization wait time (B)

When ADREFP1 and ADREFP0 are set to 1 and 0, the setting is changed to A = 5 μs, B = 1 μs.
When ADREFP1 and ADREFP0 are set to 0 and 0 or 0 and 1, A needs no wait and B = 1 μs.
Start A/D conversion after elapse of the wait time in (5).

- When ADREFP1 and ADREFP0 are set to 1 and 0, respectively, A/D conversion cannot be performed on the temperature sensor output voltage and internal reference voltage.
  Be sure to perform A/D conversion while ADISS = 0.

ADREFM	Selection of the - side reference voltage of the A/D converter
0	Supplied from V_{SS}
1	Supplied from P21/AV_{REFM}/ANI1

Note Operation is possible only in HS (high-speed main) mode.

Caution 1. Rewrite the value of the ADM2 register while conversion is stopped (ADCS = 0, ADCE = 0).

Caution 2. When entering STOP mode or HALT mode while the CPU is operating on the subsystem clock, do not set ADREFP1 to 1. When selecting internal reference voltage (ADREFP1, ADREFP0 = 1, 0), the current value of A/D converter reference voltage current (I_{ADREF}) shown in 37.3.2 or 38.3.2 Supply current characteristics is added.

Caution 3. When using AV_{REFP} and AV_{REFM}, specify ANI0 and ANI1 as the analog input channels and specify input mode by using the port mode register.

Figure 15 - 8 Format of A/D converter mode register 2 (ADM2) (2/2)

Address: F0010H After reset: 00H R/W

Symbol	7	6	5	4	3	2	1	0
ADM2	ADREFP1	ADREFP0	ADREFM	0	ADRCK	AWC	0	ADTYP

ADRCK	Checking the upper limit and lower limit conversion result values
0	The interrupt signal (INTAD) is output when the ADLL register ≤ the ADCR register ≤ the ADUL register (AREA1).
1	The interrupt signal (INTAD) is output when the ADCR register < the ADLL register (AREA2) or the ADUL register < the ADCR register (AREA3).
Figure 15 - 9 shows the generation range of the interrupt signal (INTAD) for AREA1 to AREA3.	

AWC	Specification of the SNOOZE mode
0	Do not use the SNOOZE mode function.
1	Use the SNOOZE mode function.

When there is a hardware trigger signal in the STOP mode, the STOP mode is exited, and A/D conversion is performed without operating the CPU (the SNOOZE mode).

- The SNOOZE mode function can only be specified when the high-speed on-chip oscillator clock is selected for the CPU/peripheral hardware clock (f_{CLK}). If any other clock is selected, specifying this mode is prohibited.
- Using the SNOOZE mode function in the software trigger mode or hardware trigger no-wait mode is prohibited.
- Using the SNOOZE mode function in the sequential conversion mode is prohibited.
- When using the SNOOZE mode function, specify a hardware trigger interval of at least “shift time to SNOOZE mode Note + conversion start time + A/D power supply stabilization wait time + A/D conversion time + 2 f_{CLK} clock”
- Even when using SNOOZE mode, be sure to set the AWC bit to 0 in normal operation and change it to 1 just before shifting to STOP mode.
  Also, be sure to change the AWC bit to 0 after returning from STOP mode to normal operation.
  If the AWC bit is left set to 1, A/D conversion will not start normally in spite of the subsequent SNOOZE or normal operation mode.

ADTYP	Selection of the A/D conversion resolution
0	10-bit resolution
1	8-bit resolution

Note Refer to “Transition time from STOP mode to SNOOZE mode” in **26.3.3 SNOOZE mode**.

Caution **Only rewrite the value of the ADM2 register while conversion operation is stopped (which is indicated by the ADCS and ADCE bits of A/D converter mode register 0 (ADM0) being 0).**

Figure 15 - 9 ADRCK Bit Interrupt Signal Generation Range

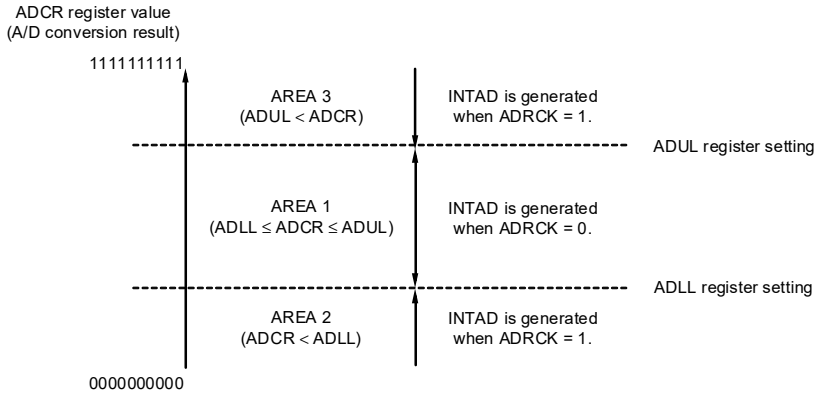

Remark If INTAD does not occur, the A/D conversion result is not stored in the ADCR or ADCRH register.

15.3.5 10-bit A/D conversion result register (ADCR)

This register is a 16-bit register that stores the A/D conversion result in the select mode. The lower 6 bits are fixed to 0. Each time A/D conversion ends, the conversion result is loaded from the successive approximation register (SAR). The higher 8 bits of the conversion result are stored in FFF1FH and the lower 2 bits are stored in the higher 2 bits of FFF1EH[Note].
The ADCR register can be read by a 16-bit memory manipulation instruction.
Reset signal generation clears this register to 0000H.

Note If the A/D conversion result is outside the range specified by using the A/D conversion comparison function (the value specified by the ADRCK bit of the ADM2 register and ADUL/ADLL registers; see **Figure 15 - 9**), the result is not stored.

Figure 15 - 10 Format of 10-bit A/D conversion result register (ADCR)

Address: FFF1FH, FFF1EH After reset: 0000H R

Symbol	FFF1FH								FFF1EH							
	15	14	13	12	11	10	9	8	7	6	5	4	3	2	1	0
ADCR											0	0	0	0	0	0

Caution 1. When 8-bit resolution A/D conversion is selected (when the ADTYP bit of A/D converter mode register 2 (ADM2) is 1) and the ADCR register is read, 0 is read from the lower two bits (bits 7 and 6 of the ADCR register).

Caution 2. When the ADCR register is accessed in 16-bit units, the higher 10 bits of the conversion result are read in order starting at bit 15.

15.3.6 8-bit A/D conversion result register (ADCRH)

This register is an 8-bit register that stores the A/D conversion result. The higher 8 bits of 10-bit resolution are stored [Note].
The ADCRH register can be read by an 8-bit memory manipulation instruction.
Reset signal generation clears this register to 00H.

Note If the A/D conversion result is outside the range specified by using the A/D conversion comparison function (the value specified by the ADRCK bit of the ADM2 register and ADUL/ADLL registers; see **Figure 15 - 9**), the result is not stored.

Figure 15 - 11 Format of 8-bit A/D conversion result register (ADCRH)

Address: FFF1FH After reset: 00H R

Symbol	7	6	5	4	3	2	1	0
ADCRH								

Caution When writing to the A/D converter mode register 0 (ADM0) and Analog input channel specification register (ADS), the contents of the ADCRH register may become undefined. Read the conversion result following conversion completion before writing to the ADM0 and ADS registers. Using timing other than the above may cause an incorrect conversion result to be read.

15.3.7 Analog input channel specification register (ADS)

This register specifies the input channel of the analog voltage to be A/D converted.
The ADS register can be set by a 1-bit or 8-bit memory manipulation instruction.
Reset signal generation clears this register to 00H.

Figure 15 - 12 Format of Analog input channel specification register (ADS) (1/2)

Address: FFF31H After reset: 00H R/W

Symbol	7	6	5	4	3	2	1	0
ADS	ADISS	0	0	ADS4	ADS3	ADS2	ADS1	ADS0

• Select mode (ADMD = 0)

ADISS	ADS4	ADS3	ADS2	ADS1	ADS0	Selected channel	64-pin	48-pin	36-pin	32-pin	24-pin
0	0	0	0	0	0	ANI0	√	√	√	√	√
0	0	0	0	0	1	ANI1	√	√	√	√	√
0	0	0	0	1	0	ANI2	√	√	√	√	√
0	0	0	0	1	1	ANI3	√	√	√	√	×
0	0	0	1	0	0	ANI4	√	√	√	×	×
0	0	0	1	0	1	ANI5	√	√	√	×	×
0	0	0	1	1	0	ANI6	√	√	×	×	×
0	0	0	1	1	1	ANI7	√	√	×	×	×
0	1	0	0	0	0	ANI16	√	√	√	√	√
0	1	0	0	0	1	ANI17	√	√	√	√	√
0	1	0	0	1	0	ANI18	√	√	√	√	√
0	1	0	0	1	1	ANI19	√	√	√	√	×
0	1	0	1	0	0	ANI20	√	√	√	√	√
0	1	0	1	0	1	ANI21	√	√	√	√	√
0	1	0	1	1	0	ANI22	√	√	√	√	×
0	1	0	1	1	1	ANI23	√	√	√	√	×
0	1	1	0	0	0	ANI24	√	√	√	√	×
0	1	1	0	0	1	PGAOUT (PGA output)	√	√	√	√	√
1	0	0	0	0	0	Temperature sensor output voltage[Notes 1, 2]	√	√	√	√	√
1	0	0	0	0	1	Internal reference voltage (1.45 V)[Note 2]	√	√	√	√	√
Other than above						Setting prohibited					

Note 1. If the internal reference voltage (1.45 V) is selected as the reference voltage of comparator 0 or comparator 1, the temperature sensor output cannot be selected.

Note 2. Operation is possible only in HS (high-speed main) mode.

(**Cautions** and **Remark** are listed on the next page.)

Figure 15 - 13 Format of Analog input channel specification register (ADS) (2/2)

Address: FFF31H After reset: 00H R/W

Symbol	7	6	5	4	3	2	1	0
ADS	ADISS	0	0	ADS4	ADS3	ADS2	ADS1	ADS0

• Scan mode (ADMD = 1)

ADISS	ADS4	ADS3	ADS2	ADS1	ADS0	Analog input channel				64-pin	48-pin	36-pin	32-pin	24-pin
						Scan 0	Scan 1	Scan 2	Scan 3					
0	0	0	0	0	0	ANI0	ANI1	ANI2	ANI3	√	√	√	√	×
0	0	0	0	0	1	ANI1	ANI2	ANI3	ANI4	√	√	√	×	×
0	0	0	0	1	0	ANI2	ANI3	ANI4	ANI5	√	√	√	×	×
0	0	0	0	1	1	ANI3	ANI4	ANI5	ANI6	√	√	×	×	×
0	0	0	1	0	0	ANI4	ANI5	ANI6	ANI7	√	√	×	×	×
Other than above						Setting prohibited								

Caution 1. Be sure to clear bits 5 and 6 to 0.

Caution 2. Set a channel to be set the analog input by PMCx register in the input mode by using port mode registers 0 to 2, 12, and 14 (PM0 to PM2, PM12, PM14).

Caution 3. Do not set the pin that is set by Port mode control registers 0 to 2, 12, and 14 (PMC0 to PMC2, PMC12, PMC14) as digital I/O by the ADS register.

Caution 4. Rewrite the value of the ADISS bit while conversion is stopped (ADCS = 0, ADCE = 0).

Caution 5. If using AVREFP as the + side reference voltage of the A/D converter, do not select ANI0 as an A/D conversion channel.

Caution 6. If using AVREFM as the – side reference voltage of the A/D converter, do not select ANI1 as an A/D conversion channel.

Caution 7. If the ADISS bit is set to 1, the internal reference voltage (1.45 V) cannot be used for the + side reference voltage. After the ADISS bit is set to 1, the initial conversion result cannot be used.
For the setting flow, see 15.7.4 Setup when temperature sensor output voltage/internal reference voltage is selected (example for software trigger mode and one-shot conversion mode).

Caution 8. Do not set the ADISS bit to 1 when shifting to STOP mode, or to HALT mode while the CPU is operating on the subsystem clock. When the ADISS bit is set to 1, the A/D converter reference voltage current (IADREF) indicated in 37.3.2 or 38.3.2 Supply current characteristics will be added.

Remark √: Setting enabled, ×: Setting prohibited

15.3.8 Conversion result comparison upper limit setting register (ADUL)

This register is used to specify the setting for checking the upper limit of the A/D conversion results.

The A/D conversion results and ADUL register value are compared, and interrupt signal (INTAD) generation is controlled in the range specified for the ADRCK bit of A/D converter mode register 2 (ADM2) (shown in **Figure 15 - 9**).

The ADUL register can be set by an 8-bit memory manipulation instruction.

Reset signal generation sets this register to FFH.

Caution 1. When 10-bit resolution A/D conversion is selected, the higher eight bits of the 10-bit A/D conversion result register (ADCR) are compared with the ADUL and ADLL registers.

Caution 2. Only write new values to the ADUL and ADLL registers while conversion is stopped (ADCS = 0, ADCE = 0).

Caution 3. The setting of the ADUL and ADLL registers must be greater than that of the ADLL register.

Figure 15 - 14 Format of Conversion result comparison upper limit setting register (ADUL)

Address: F0011H After reset: FFH R/W

Symbol	7	6	5	4	3	2	1	0
ADUL	ADUL7	ADUL6	ADUL5	ADUL4	ADUL3	ADUL2	ADUL1	ADUL0

15.3.9 Conversion result comparison lower limit setting register (ADLL)

This register is used to specify the setting for checking the lower limit of the A/D conversion results.

The A/D conversion results and ADLL register value are compared, and interrupt signal (INTAD) generation is controlled in the range specified for the ADRCK bit of A/D converter mode register 2 (ADM2) (shown in **Figure 15 - 9**).

The ADLL register can be set by an 8-bit memory manipulation instruction.

Reset signal generation clears this register to 00H.

Figure 15 - 15 Format of Conversion result comparison lower limit setting register (ADLL)

Address: F0012H After reset: 00H R/W

Symbol	7	6	5	4	3	2	1	0
ADLL	ADLL7	ADLL6	ADLL5	ADLL4	ADLL3	ADLL2	ADLL1	ADLL0

Caution 1. When 10-bit resolution A/D conversion is selected, the higher eight bits of the 10-bit A/D conversion result register (ADCR) are compared with the ADUL and ADLL registers.

Caution 2. Only write new values to the ADUL and ADLL registers while conversion is stopped (ADCS = 0, ADCE = 0).

Caution 3. The setting of the ADUL and ADLL registers must be greater than that of the ADLL register.

15.3.10 A/D test register (ADTES)

This register is used to select the + side reference voltage or - side reference voltage for the converter, an analog input channel (ANIxx), the temperature sensor output voltage, or the internal reference voltage (1.45 V) as the target for A/D conversion.

When using this register to test the converter, set as follows.

- For zero-scale measurement, select the - side reference voltage as the target for conversion.
- For full-scale measurement, select the + side reference voltage as the target for conversion.

The ADTES register can be set by an 8-bit memory manipulation instruction.

Reset signal generation clears this register to 00H.

Figure 15 - 16 Format of A/D test register (ADTES)

Address: F0013H After reset: 00H R/W

Symbol	7	6	5	4	3	2	1	0
ADTES	0	0	0	0	0	0	ADTES1	ADTES0

ADTES1	ADTES0	A/D conversion target
0	0	ANIxx/temperature sensor output voltage Note/internal reference voltage (1.45 V) Note (This is specified using the analog input channel specification register (ADS).)
1	0	The - side reference voltage (selected by the ADREFM bit of the ADM2 register)
1	1	The + side reference voltage (selected by the ADREFP1 or ADREFP0 bit of the ADM2 register)
Other than the above		Setting prohibited

Note The temperature sensor output voltage and internal reference voltage (1.45 V) can be selected only in the HS (high-speed main) mode.

15.3.11 Registers controlling port function of analog input pins

Set up the registers for controlling the functions of the ports shared with the analog input pins of the A/D converter (port mode registers (PMxx) and port mode control registers (PMCxx)). For details, see **4.3.1 Port mode registers (PMxx)** and **4.3.6 Port mode control registers (PMCxx)**.

When using the ANI0 to ANI7 and ANI16 to ANI24 pins for analog input of the A/D converter, set the port mode register (PMxx) bit and port mode control register (PMCxx) bit corresponding to each port to 1.

15.4 A/D Converter Conversion Operations

The A/D converter conversion operations are described below.

<1> The voltage input to the selected analog input channel is sampled by the sample & hold circuit.

<2> When sampling has been done for a certain time, the sample & hold circuit is placed in the hold state and the sampled voltage is held until the A/D conversion operation has ended.

<3> Bit 9 of the successive approximation register (SAR) is set. The series resistor string voltage tap is set to (1/2) AV_{REF} by the tap selector.

<4> The voltage difference between the series resistor string voltage tap and sampled voltage is compared by the voltage comparator. If the analog input is greater than (1/2) AV_{REF}, the MSB bit of the SAR register remains set to 1. If the analog input is smaller than (1/2) AV_{REF}, the MSB bit is reset to 0.

<5> Next, bit 8 of the SAR register is automatically set to 1, and the operation proceeds to the next comparison.

The series resistor string voltage tap is selected according to the preset value of bit 9, as described below.

- Bit 9 = 1: (3/4) AV_{REF}
- Bit 9 = 0: (1/4) AV_{REF}

The voltage tap and sampled voltage are compared and bit 8 of the SAR register is manipulated as follows.

- Sampled voltage ≥ Voltage tap: Bit 8 = 1
- Sampled voltage < Voltage tap: Bit 8 = 0

<6> Comparison is continued in this way up to bit 0 of the SAR register.

<7> Upon completion of the comparison of 10 bits, an effective digital result value remains in the SAR register, and the result value is transferred to the A/D conversion result register (ADCR, ADCRH) and then latched[Note 1].

At the same time, the A/D conversion end interrupt request (INTAD) can also be generated.

<8> Repeat steps <1> to <7>, until the ADCS bit is cleared to 0[Note 2].

To stop the A/D converter, clear the ADCS bit to 0.

Note 1. If the A/D conversion result is outside the A/D conversion result range specified by the ADRCK bit and the ADUL and ADLL registers (see **Figure 15 - 9**), the A/D conversion result interrupt request signal is not generated and no A/D conversion results are stored in the ADCR and ADCRH registers.

Note 2. While in the sequential conversion mode, the ADCS flag is not automatically cleared to 0. This flag is not automatically cleared to 0 while in the one-shot conversion mode of the hardware trigger no-wait mode, either. Instead, 1 is retained.

Remark 1. Two types of the A/D conversion result registers are available.

- ADCR register (16 bits): Store 10-bit A/D conversion value
- ADCRH register (8 bits): Store 8-bit A/D conversion value

Remark 2. AV_{REF}: The + side reference voltage of the A/D converter. This can be selected from AV_{REFP}, the internal reference voltage (1.45 V), and V_{DD}.

Figure 15 - 17 Conversion Operation of A/D Converter (Software Trigger Mode)

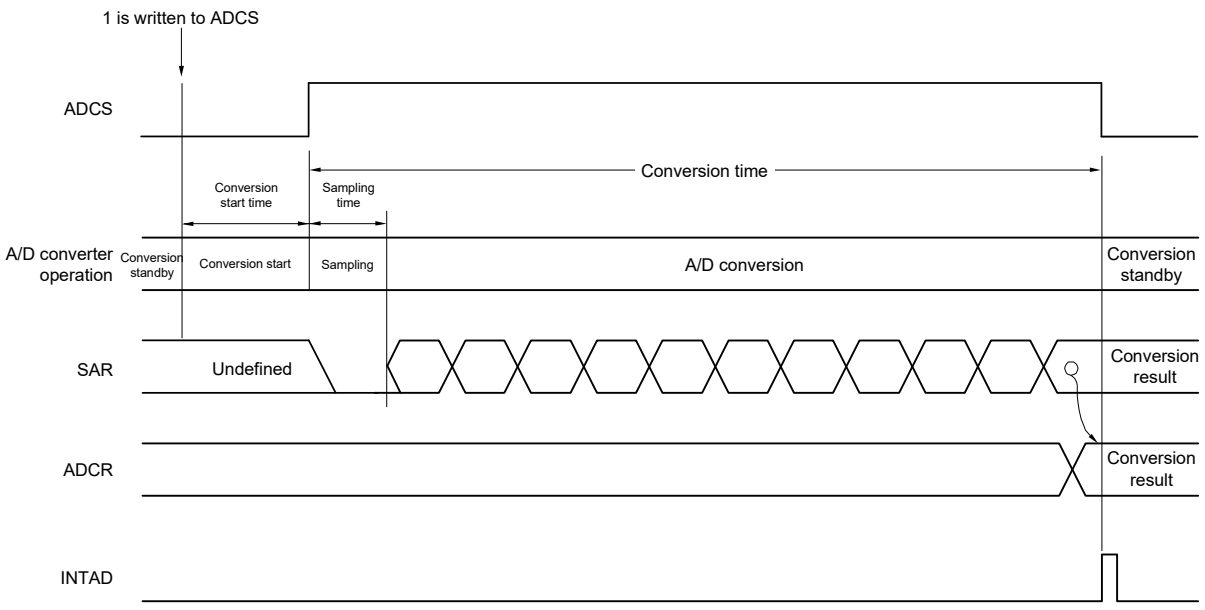

In one-shot conversion mode, the ADCS bit is automatically cleared to 0 after completion of A/D conversion.

In sequential conversion mode, A/D conversion operations proceed continuously until the software clears bit 7 (ADCS) of the A/D converter mode register 0 (ADM0) to 0.

Writing to the analog input channel specification register (ADS) during A/D conversion interrupts the current conversion after which A/D conversion of the analog input specified by the ADS register proceeds. Data from the A/D conversion that was in progress are discarded.

Reset signal generation clears the A/D conversion result register (ADCR, ADCRH) to 0000H or 00H.

15.5 Input Voltage and Conversion Results

The relationship between the analog input voltage input to the analog input pins (ANI0 to ANI7, ANI16 to ANI24) and the theoretical A/D conversion result (stored in the 10-bit A/D conversion result register (ADCR)) is shown by the following expression.

$$SAR = INT\left(\frac{V_{AIN}}{AV_{REF}} \times 1024 + 0.5\right)$$

$$ADCR = SAR \times 64$$

or

$$\left(\frac{ADCR}{64} - 0.5\right) \times \frac{AV_{REF}}{1024} \leq V_{AIN} < \left(\frac{ADCR}{64} + 0.5\right) \times \frac{AV_{REF}}{1024}$$

where, INT( ): Function which returns integer part of value in parentheses
V_{AIN}: Analog input voltage
AV_{REF}: AV_{REF} pin voltage
ADCR: A/D conversion result register (ADCR) value
SAR: Successive approximation register

Figure 15 - 18 shows the Relationship Between Analog Input Voltage and A/D Conversion Result.

Figure 15 - 18 Relationship Between Analog Input Voltage and A/D Conversion Result

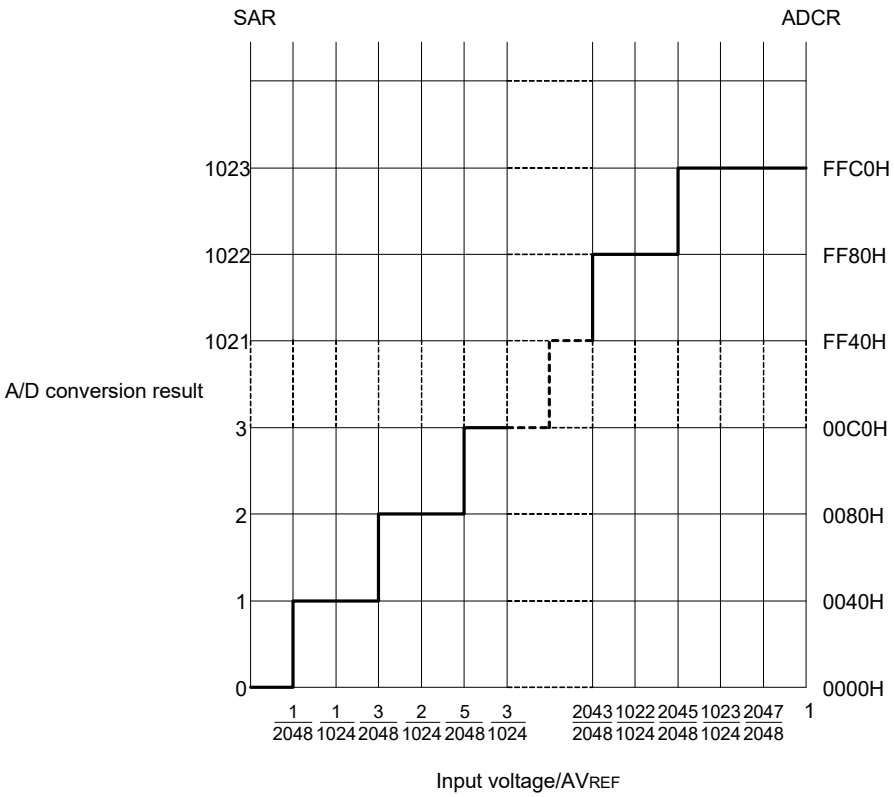

Remark AV_{REF}: The + side reference voltage of the A/D converter. This can be selected from AV_{REFP}, the internal reference voltage (1.45 V), and V_{DD}.

15.6 A/D Converter Operation Modes

The operation of each A/D converter mode is described below. In addition, the procedure for specifying each mode is described in **15.7 A/D Converter Setup Flowchart**.

15.6.1 Software trigger mode (select mode, sequential conversion mode)

<1> In the stop status, the ADCE bit of A/D converter mode register 0 (ADM0) is set to 1, and the system enters the A/D conversion standby status.

<2> After the software counts up to the stabilization wait time (1 μs), the ADCS bit of the ADM0 register is set to 1 to perform the A/D conversion of the analog input specified by the analog input channel specification register (ADS).

<3> When A/D conversion ends, the conversion result is stored in the A/D conversion result register (ADCR, ADCRH), and the A/D conversion end interrupt request signal (INTAD) is generated. After A/D conversion ends, the next A/D conversion immediately starts.

<4> When ADCS is overwritten with 1 during conversion operation, the current A/D conversion is interrupted, and conversion restarts. The partially converted data is discarded.

<5> When the value of the ADS register is rewritten or overwritten during conversion operation, the current A/D conversion is interrupted, and A/D conversion is performed on the analog input respecified by the ADS register. The partially converted data is discarded.

<6> Even if a hardware trigger is input during conversion operation, A/D conversion does not start.

<7> When ADCS is cleared to 0 during conversion operation, the current A/D conversion is interrupted, and the system enters the A/D conversion standby status.

<8> When ADCE is cleared to 0 while in the A/D conversion standby status, the A/D converter enters the stop status. When ADCE = 0, specifying 1 for ADCS is ignored and A/D conversion does not start.

Figure 15 - 19 Example of Software Trigger Mode (Select Mode, Sequential Conversion Mode) Operation Timing

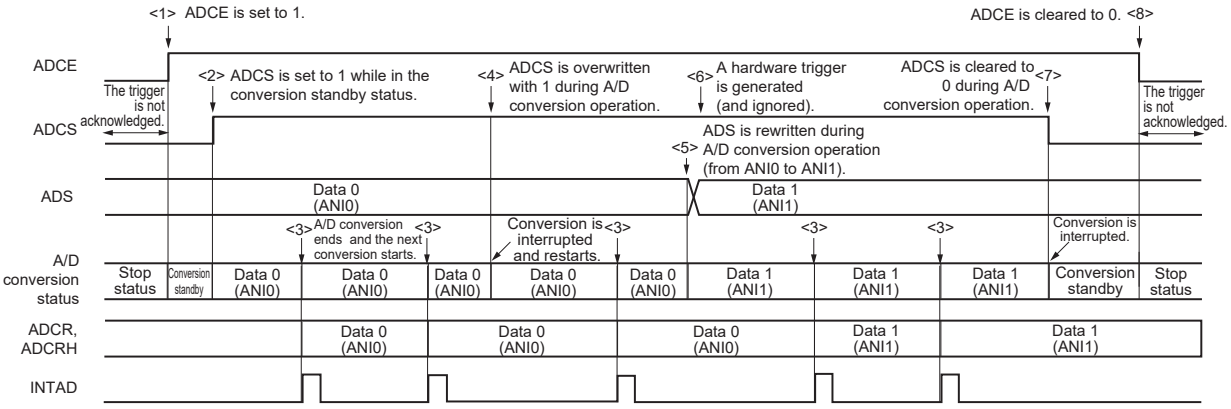

15.6.2 Software trigger mode (select mode, one-shot conversion mode)

<1> In the stop status, the ADCE bit of A/D converter mode register 0 (ADM0) is set to 1, and the system enters the A/D conversion standby status.

<2> After the software counts up to the stabilization wait time (1 μs), the ADCS bit of the ADM0 register is set to 1 to perform the A/D conversion of the analog input specified by the analog input channel specification register (ADS).

<3> When A/D conversion ends, the conversion result is stored in the A/D conversion result register (ADCR, ADCRH), and the A/D conversion end interrupt request signal (INTAD) is generated.

<4> After A/D conversion ends, the ADCS bit is automatically cleared to 0, and the system enters the A/D conversion standby status.

<5> When ADCS is overwritten with 1 during conversion operation, the current A/D conversion is interrupted, and conversion restarts. The partially converted data is discarded.

<6> When the value of the ADS register is rewritten or overwritten during conversion operation, the current A/D conversion is interrupted, and A/D conversion is performed on the analog input respecified by the ADS register. The partially converted data is discarded.

<7> When ADCS is cleared to 0 during conversion operation, the current A/D conversion is interrupted, and the system enters the A/D conversion standby status.

<8> When ADCE is cleared to 0 while in the A/D conversion standby status, the A/D converter enters the stop status. When ADCE = 0, specifying 1 for ADCS is ignored and A/D conversion does not start. In addition, A/D conversion does not start even if a hardware trigger is input while in the A/D conversion standby status.

Figure 15 - 20 Example of Software Trigger Mode (Select Mode, One-Shot Conversion Mode) Operation Timing

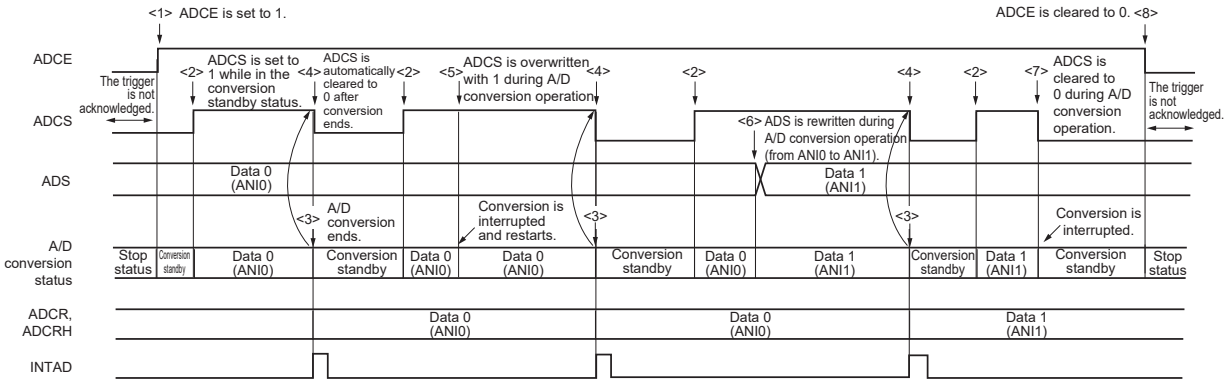

15.6.3 Software trigger mode (scan mode, sequential conversion mode)

<1> In the stop status, the ADCE bit of A/D converter mode register 0 (ADM0) is set to 1, and the system enters the A/D conversion standby status.

<2> After the software counts up to the stabilization wait time (1 μs), the ADCS bit of the ADM0 register is set to 1 to perform A/D conversion on the four analog input channels specified by scan 0 to scan 3, which are specified by the analog input channel specification register (ADS). A/D conversion is performed on the analog input channels in order, starting with that specified by scan 0.

<3> A/D conversion is sequentially performed on the four analog input channels, the conversion results are stored in the A/D conversion result register (ADCR, ADCRH) each time conversion ends, and the A/D conversion end interrupt request signal (INTAD) is generated. After A/D conversion of the four channels ends, the A/D conversion of the channel following the specified channel automatically starts (until all four channels are finished).

<4> When ADCS is overwritten with 1 during conversion operation, the current A/D conversion is interrupted, and conversion restarts at the first channel. The partially converted data is discarded.

<5> When the value of the ADS register is rewritten or overwritten during conversion operation, the current A/D conversion is interrupted, and A/D conversion is performed on the first channel respecified by the ADS register. The partially converted data is discarded.

<6> Even if a hardware trigger is input during conversion operation, A/D conversion does not start.

<7> When ADCS is cleared to 0 during conversion operation, the current A/D conversion is interrupted, and the system enters the A/D conversion standby status.

<8> When ADCE is cleared to 0 while in the A/D conversion standby status, the A/D converter enters the stop status. When ADCE = 0, specifying 1 for ADCS is ignored and A/D conversion does not start.

Figure 15 - 21 Example of Software Trigger Mode (Scan Mode, Sequential Conversion Mode) Operation Timing

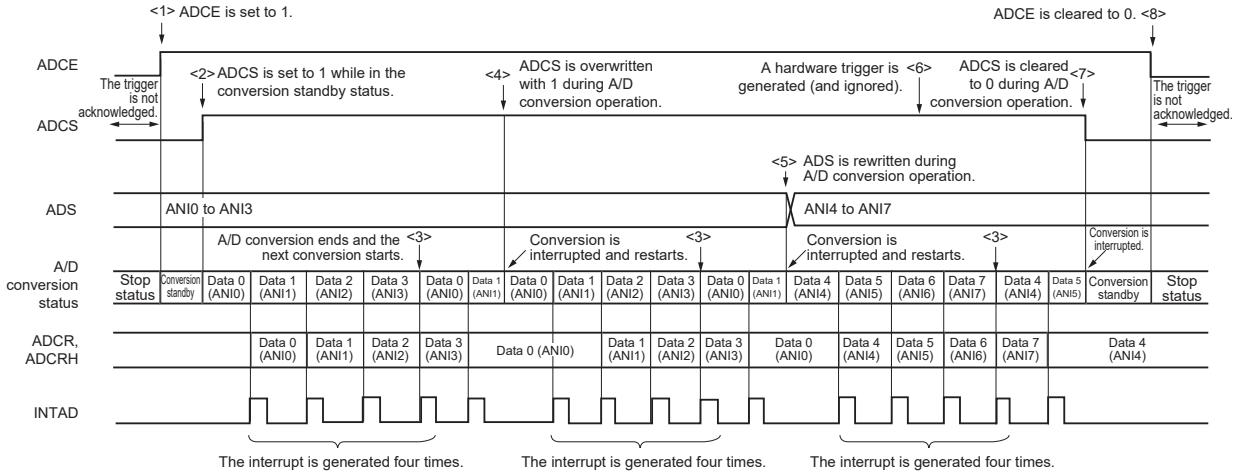

15.6.4 Software trigger mode (scan mode, one-shot conversion mode)

<1> In the stop status, the ADCE bit of A/D converter mode register 0 (ADM0) is set to 1, and the system enters the A/D conversion standby status.

<2> After the software counts up to the stabilization wait time (1 μs), the ADCS bit of the ADM0 register is set to 1 to perform A/D conversion on the four analog input channels specified by scan 0 to scan 3, which are specified by the analog input channel specification register (ADS). A/D conversion is performed on the analog input channels in order, starting with that specified by scan 0.

<3> A/D conversion is sequentially performed on the four analog input channels, the conversion results are stored in the A/D conversion result register (ADCR, ADCRH) each time conversion ends, and the A/D conversion end interrupt request signal (INTAD) is generated.

<4> After A/D conversion of the four channels ends, the ADCS bit is automatically cleared to 0, and the system enters the A/D conversion standby status.

<5> When ADCS is overwritten with 1 during conversion operation, the current A/D conversion is interrupted, and conversion restarts at the first channel. The partially converted data is discarded.

<6> When the value of the ADS register is rewritten or overwritten during conversion operation, the current A/D conversion is interrupted, and A/D conversion is performed on the first channel respecified by the ADS register. The partially converted data is discarded.

<7> When ADCS is cleared to 0 during conversion operation, the current A/D conversion is interrupted, and the system enters the A/D conversion standby status.

<8> When ADCE is cleared to 0 while in the A/D conversion standby status, the A/D converter enters the stop status. When ADCE = 0, specifying 1 for ADCS is ignored and A/D conversion does not start. In addition, A/D conversion does not start even if a hardware trigger is input while in the A/D conversion standby status.

Figure 15 - 22 Example of Software Trigger Mode (Scan Mode, One-Shot Conversion Mode) Operation Timing

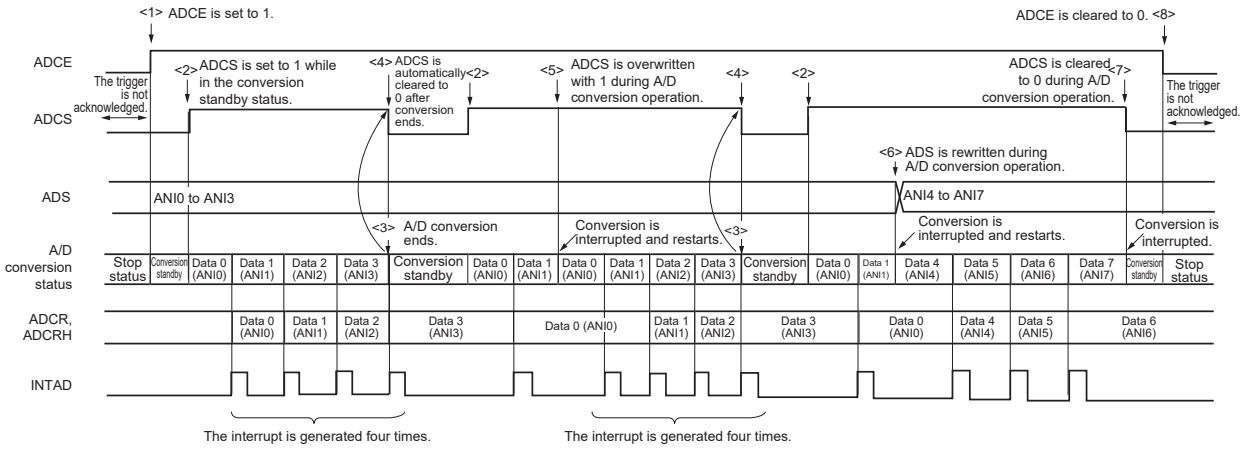

15.6.5 Hardware trigger no-wait mode (select mode, sequential conversion mode)

<1> In the stop status, the ADCE bit of A/D converter mode register 0 (ADM0) is set to 1, and the system enters the A/D conversion standby status.

<2> After the software counts up to the stabilization wait time (1 μs), the ADCS bit of the ADM0 register is set to 1 to place the system in the hardware trigger standby status (and conversion does not start at this stage). Note that, while in this status, A/D conversion does not start even if ADCS is set to 1.

<3> If a hardware trigger is input while ADCS = 1, A/D conversion is performed on the analog input specified by the analog input channel specification register (ADS).

<4> When A/D conversion ends, the conversion result is stored in the A/D conversion result register (ADCR, ADCRH), and the A/D conversion end interrupt request signal (INTAD) is generated. After A/D conversion ends, the next A/D conversion immediately starts.

<5> If a hardware trigger is input during conversion operation, the current A/D conversion is interrupted, and conversion restarts. The partially converted data is discarded.

<6> When the value of the ADS register is rewritten or overwritten during conversion operation, the current A/D conversion is interrupted, and A/D conversion is performed on the analog input respecified by the ADS register. The partially converted data is discarded.

<7> When ADCS is overwritten with 1 during conversion operation, the current A/D conversion is interrupted, and conversion restarts. The partially converted data is discarded.

<8> When ADCS is cleared to 0 during conversion operation, the current A/D conversion is interrupted, and the system enters the A/D conversion standby status. However, the A/D converter does not stop in this status.

<9> When ADCE is cleared to 0 while in the A/D conversion standby status, the A/D converter enters the stop status. When ADCS = 0, inputting a hardware trigger is ignored and A/D conversion does not start.

Figure 15 - 23 Example of Hardware Trigger No-Wait Mode (Select Mode, Sequential Conversion Mode) Operation Timing

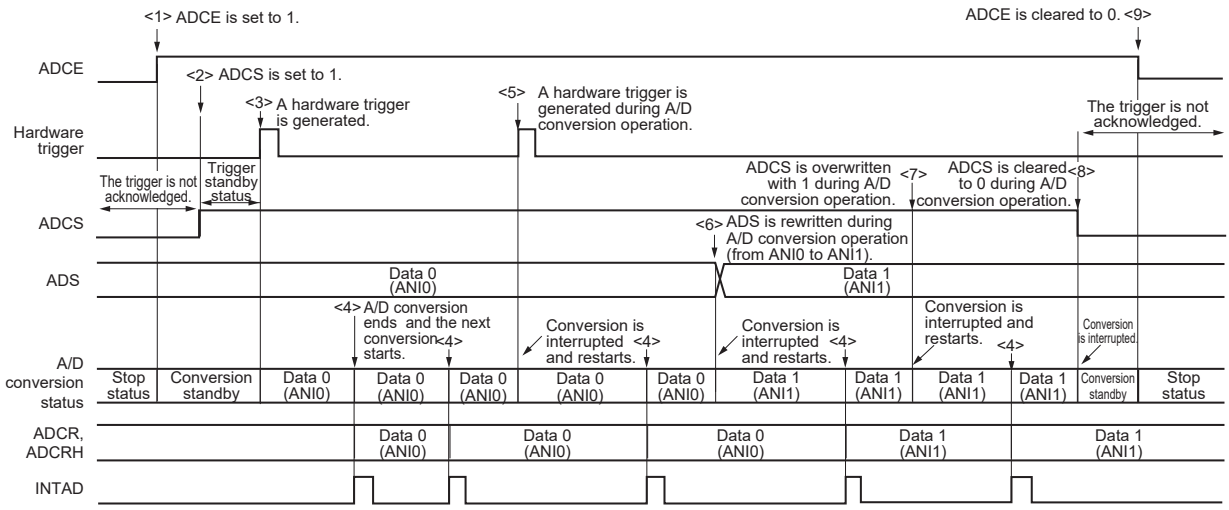

15.6.6 Hardware trigger no-wait mode (select mode, one-shot conversion mode)

<1> In the stop status, the ADCE bit of A/D converter mode register 0 (ADM0) is set to 1, and the system enters the A/D conversion standby status.

<2> After the software counts up to the stabilization wait time (1 μs), the ADCS bit of the ADM0 register is set to 1 to place the system in the hardware trigger standby status (and conversion does not start at this stage). Note that, while in this status, A/D conversion does not start even if ADCS is set to 1.

<3> If a hardware trigger is input while ADCS = 1, A/D conversion is performed on the analog input specified by the analog input channel specification register (ADS).

<4> When A/D conversion ends, the conversion result is stored in the A/D conversion result register (ADCR, ADCRH), and the A/D conversion end interrupt request signal (INTAD) is generated.

<5> After A/D conversion ends, the ADCS bit remains set to 1, and the system enters the A/D conversion standby status.

<6> If a hardware trigger is input during conversion operation, the current A/D conversion is interrupted, and conversion restarts. The partially converted data is discarded.

<7> When the value of the ADS register is rewritten or overwritten during conversion operation, the current A/D conversion is interrupted, and A/D conversion is performed on the analog input respecified by the ADS register. The partially converted data is discarded.

<8> When ADCS is overwritten with 1 during conversion operation, the current A/D conversion is interrupted, and conversion restarts. The partially converted data is discarded.

<9> When ADCS is cleared to 0 during conversion operation, the current A/D conversion is interrupted, and the system enters the A/D conversion standby status. However, the A/D converter does not stop in this status.

<10> When ADCE is cleared to 0 while in the A/D conversion standby status, the A/D converter enters the stop status. When ADCS = 0, inputting a hardware trigger is ignored and A/D conversion does not start.

Figure 15 - 24 Example of Hardware Trigger No-Wait Mode (Select Mode, One-Shot Conversion Mode) Operation Timing

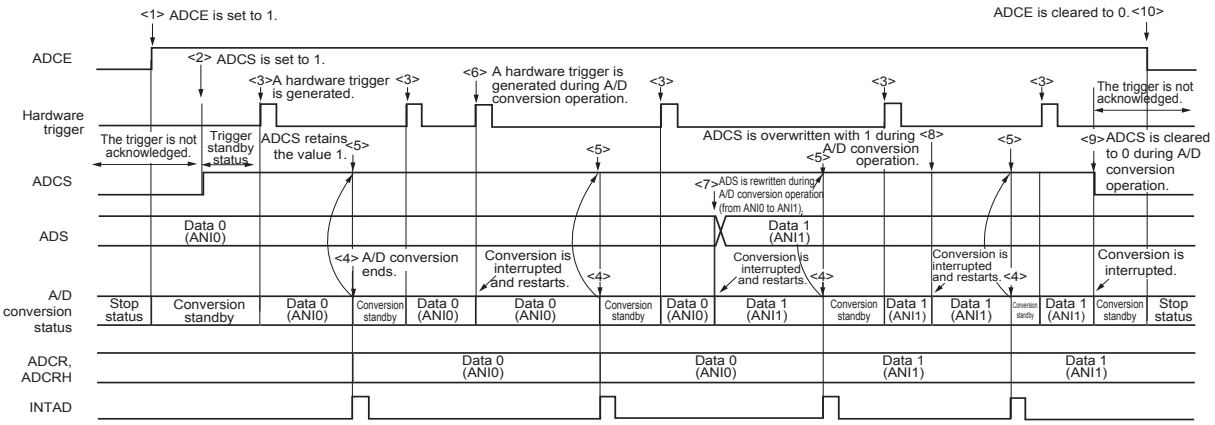

15.6.7 Hardware trigger no-wait mode (scan mode, sequential conversion mode)

<1> In the stop status, the ADCE bit of A/D converter mode register 0 (ADM0) is set to 1, and the system enters the A/D conversion standby status.

<2> After the software counts up to the stabilization wait time (1 μs), the ADCS bit of the ADM0 register is set to 1 to place the system in the hardware trigger standby status (and conversion does not start at this stage). Note that, while in this status, A/D conversion does not start even if ADCS is set to 1.

<3> If a hardware trigger is input while ADCS = 1, A/D conversion is performed on the four analog input channels specified by scan 0 to scan 3, which are specified by the analog input channel specification register (ADS). A/D conversion is performed on the analog input channels in order, starting with that specified by scan 0.

<4> A/D conversion is sequentially performed on the four analog input channels, the conversion results are stored in the A/D conversion result register (ADCR, ADCRH) each time conversion ends, and the A/D conversion end interrupt request signal (INTAD) is generated. After A/D conversion of the four channels ends, the A/D conversion of the channel following the specified channel automatically starts.

<5> If a hardware trigger is input during conversion operation, the current A/D conversion is interrupted, and conversion restarts at the first channel. The partially converted data is discarded.

<6> When the value of the ADS register is rewritten or overwritten during conversion operation, the current A/D conversion is interrupted, and A/D conversion is performed on the first channel respecified by the ADS register. The partially converted data is discarded.

<7> When ADCS is overwritten with 1 during conversion operation, the current A/D conversion is interrupted, and conversion restarts. The partially converted data is discarded.

<8> When ADCS is cleared to 0 during conversion operation, the current A/D conversion is interrupted, and the system enters the A/D conversion standby status. However, the A/D converter does not stop in this status.

<9> When ADCE is cleared to 0 while in the A/D conversion standby status, the A/D converter enters the stop status. When ADCE = 0, specifying 1 for ADCS is ignored and A/D conversion does not start.

Figure 15 - 25 Example of Hardware Trigger No-Wait Mode (Scan Mode, Sequential Conversion Mode) Operation Timing

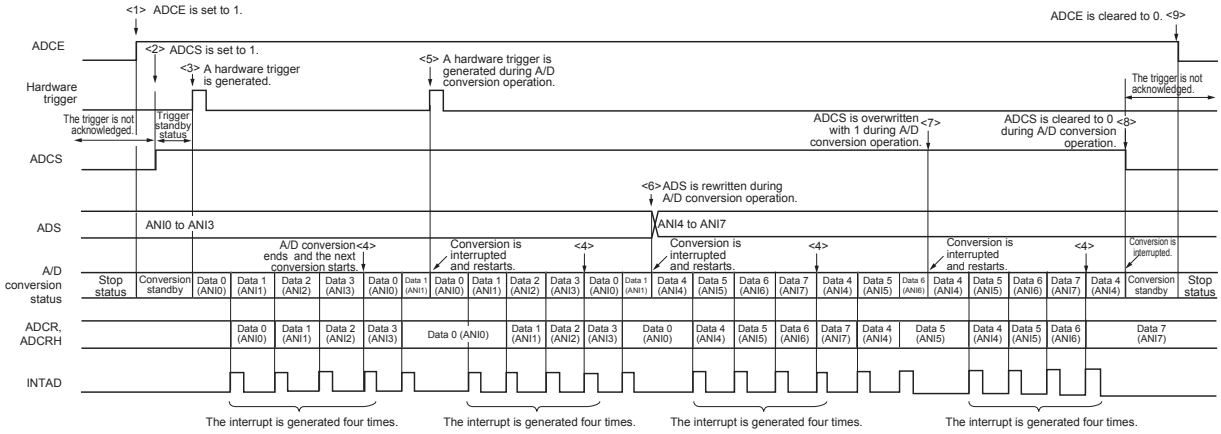

15.6.8 Hardware trigger no-wait mode (scan mode, one-shot conversion mode)

<1> In the stop status, the ADCE bit of A/D converter mode register 0 (ADM0) is set to 1, and the system enters the A/D conversion standby status.

<2> After the software counts up to the stabilization wait time (1 μs), the ADCS bit of the ADM0 register is set to 1 to place the system in the hardware trigger standby status (and conversion does not start at this stage). Note that, while in this status, A/D conversion does not start even if ADCS is set to 1.

<3> If a hardware trigger is input while ADCS = 1, A/D conversion is performed on the four analog input channels specified by scan 0 to scan 3, which are specified by the analog input channel specification register (ADS). A/D conversion is performed on the analog input channels in order, starting with that specified by scan 0.

<4> A/D conversion is sequentially performed on the four analog input channels, the conversion results are stored in the A/D conversion result register (ADCR, ADCRH) each time conversion ends, and the A/D conversion end interrupt request signal (INTAD) is generated.

<5> After A/D conversion of the four channels ends, the ADCS bit remains set to 1, and the system enters the A/D conversion standby status.

<6> If a hardware trigger is input during conversion operation, the current A/D conversion is interrupted, and conversion restarts at the first channel. The partially converted data is discarded.

<7> When the value of the ADS register is rewritten or overwritten during conversion operation, the current A/D conversion is interrupted, and A/D conversion is performed on the first channel respecified by the ADS register. The partially converted data is discarded.

<8> When ADCS is overwritten with 1 during conversion operation, the current A/D conversion is interrupted, and conversion restarts at the first channel. The partially converted data is discarded.

<9> When ADCS is cleared to 0 during conversion operation, the current A/D conversion is interrupted, and the system enters the A/D conversion standby status. However, the A/D converter does not stop in this status.

<10> When ADCE is cleared to 0 while in the A/D conversion standby status, the A/D converter enters the stop status. When ADCS = 0, inputting a hardware trigger is ignored and A/D conversion does not start.

Figure 15 - 26 Example of Hardware Trigger No-Wait Mode (Scan Mode, One-Shot Conversion Mode) Operation Timing

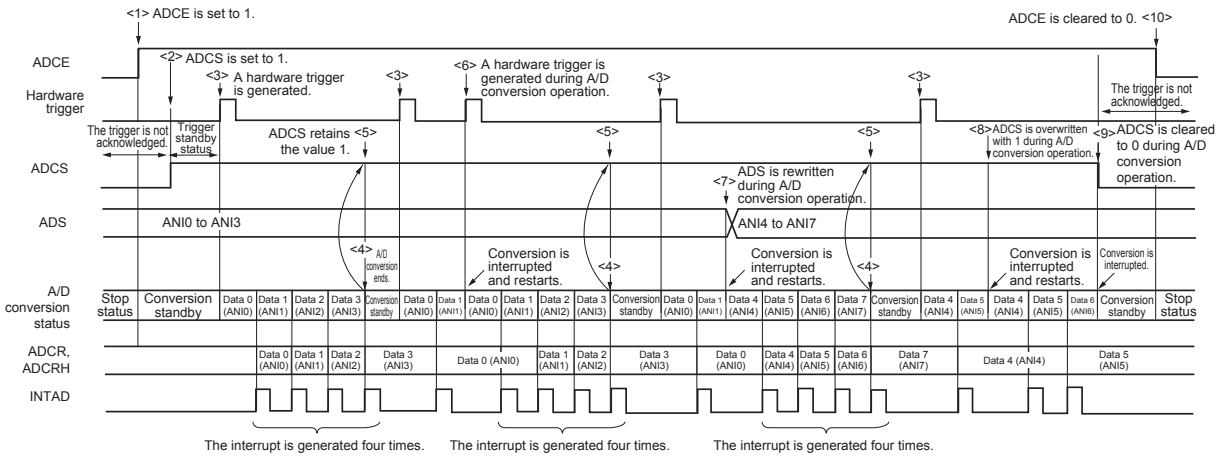

15.6.9 Hardware trigger wait mode (select mode, sequential conversion mode)

<1> In the stop status, the ADCE bit of A/D converter mode register 0 (ADM0) is set to 1, and the system enters the hardware trigger standby status.

<2> If a hardware trigger is input while in the hardware trigger standby status, A/D conversion is performed on the analog input specified by the analog input channel specification register (ADS). The ADCS bit of the ADM0 register is automatically set to 1 according to the hardware trigger input.

<3> When A/D conversion ends, the conversion result is stored in the A/D conversion result register (ADCR, ADCRH), and the A/D conversion end interrupt request signal (INTAD) is generated. After A/D conversion ends, the next A/D conversion immediately starts. (At this time, no hardware trigger is necessary.)

<4> If a hardware trigger is input during conversion operation, the current A/D conversion is interrupted, and conversion restarts. The partially converted data is discarded.

<5> When the value of the ADS register is rewritten or overwritten during conversion operation, the current A/D conversion is interrupted, and A/D conversion is performed on the analog input respecified by the ADS register. The partially converted data is discarded.

<6> When ADCS is overwritten with 1 during conversion operation, the current A/D conversion is interrupted, and conversion restarts. The partially converted data is discarded.

<7> When ADCS is cleared to 0 during conversion operation, the current A/D conversion is interrupted, the system enters the hardware trigger standby status, and the A/D converter enters the stop status. When ADCE = 0, inputting a hardware trigger is ignored and A/D conversion does not start.

Figure 15 - 27 Example of Hardware Trigger Wait Mode (Select Mode, Sequential Conversion Mode) Operation Timing

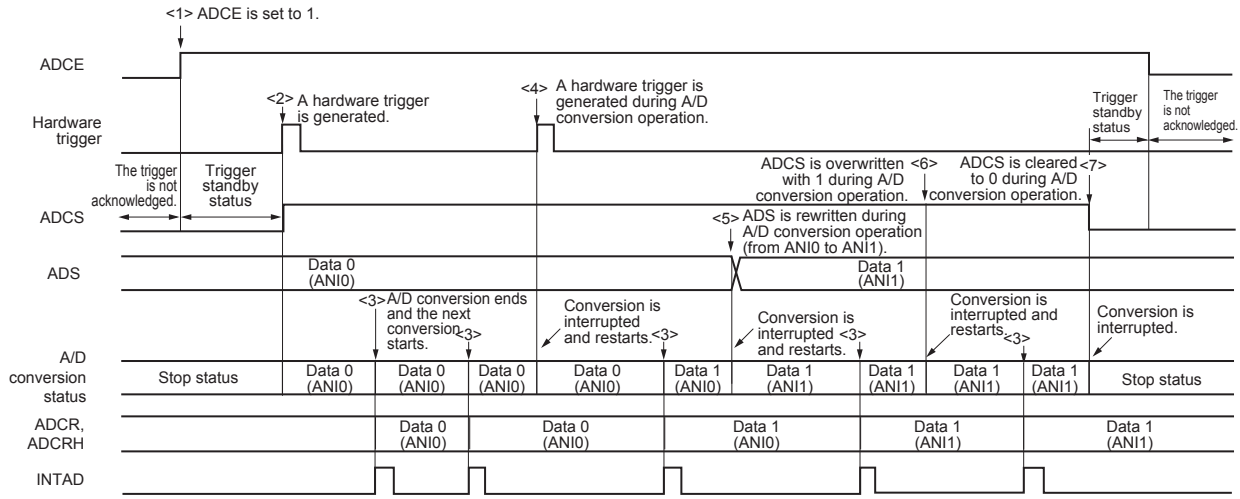

15.6.10 Hardware trigger wait mode (select mode, one-shot conversion mode)

<1> In the stop status, the ADCE bit of A/D converter mode register 0 (ADM0) is set to 1, and the system enters the hardware trigger standby status.

<2> If a hardware trigger is input while in the hardware trigger standby status, A/D conversion is performed on the analog input specified by the analog input channel specification register (ADS). The ADCS bit of the ADM0 register is automatically set to 1 according to the hardware trigger input.

<3> When A/D conversion ends, the conversion result is stored in the A/D conversion result register (ADCR, ADCRH), and the A/D conversion end interrupt request signal (INTAD) is generated.

<4> After A/D conversion ends, the ADCS bit is automatically cleared to 0, and the A/D converter enters the stop status.

<5> If a hardware trigger is input during conversion operation, the current A/D conversion is interrupted, and conversion restarts. The partially converted data is discarded.

<6> When the value of the ADS register is rewritten or overwritten during conversion operation, the current A/D conversion is interrupted, and A/D conversion is performed on the analog input respecified by the ADS register. The partially converted data is discarded.

<7> When ADCS is overwritten with 1 during conversion operation, the current A/D conversion is interrupted, and conversion restarts. The partially converted data is initialized.

<8> When ADCS is cleared to 0 during conversion operation, the current A/D conversion is interrupted, the system enters the hardware trigger standby status, and the A/D converter enters the stop status. When ADCE = 0, inputting a hardware trigger is ignored and A/D conversion does not start.

Figure 15 - 28 Example of Hardware Trigger Wait Mode (Select Mode, One-Shot Conversion Mode) Operation Timing

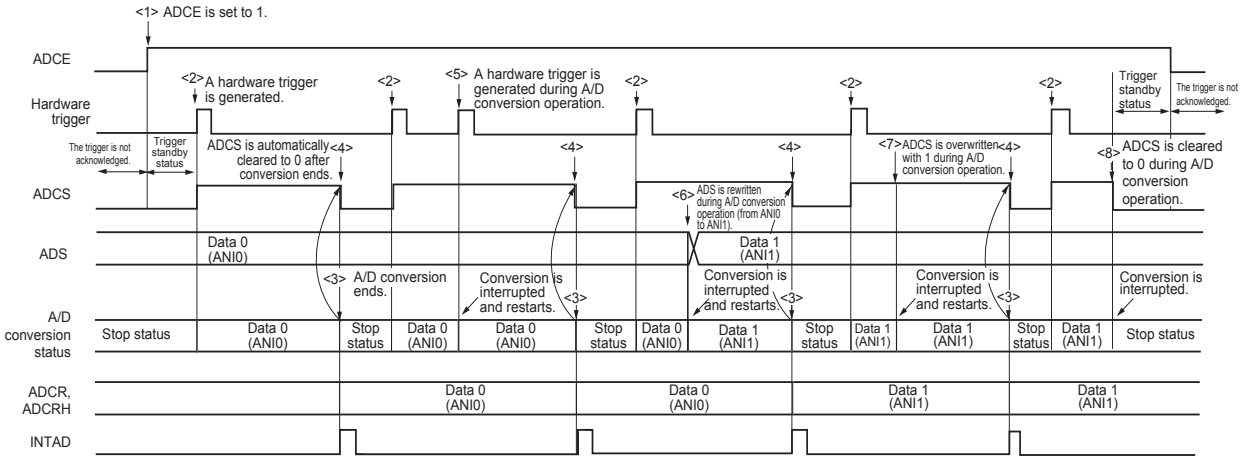

15.6.11 Hardware trigger wait mode (scan mode, sequential conversion mode)

<1> In the stop status, the ADCE bit of A/D converter mode register 0 (ADM0) is set to 1, and the system enters the A/D conversion standby status.

<2> If a hardware trigger is input while in the hardware trigger standby status, A/D conversion is performed on the four analog input channels specified by scan 0 to scan 3, which are specified by the analog input channel specification register (ADS). The ADCS bit of the ADM0 register is automatically set to 1 according to the hardware trigger input. A/D conversion is performed on the analog input channels in order, starting with that specified by scan 0.

<3> A/D conversion is sequentially performed on the four analog input channels, the conversion results are stored in the A/D conversion result register (ADCR, ADCRH) each time conversion ends, and the A/D conversion end interrupt request signal (INTAD) is generated. After A/D conversion of the four channels ends, the A/D conversion of the channel following the specified channel automatically starts.

<4> If a hardware trigger is input during conversion operation, the current A/D conversion is interrupted, and conversion restarts at the first channel. The partially converted data is discarded.

<5> When the value of the ADS register is rewritten or overwritten during conversion operation, the current A/D conversion is interrupted, and A/D conversion is performed on the first channel respecified by the ADS register. The partially converted data is discarded.

<6> When ADCS is overwritten with 1 during conversion operation, the current A/D conversion is interrupted, and conversion restarts. The partially converted data is discarded.

<7> When ADCS is cleared to 0 during conversion operation, the current A/D conversion is interrupted, the system enters the hardware trigger standby status, and the A/D converter enters the stop status. When ADCE = 0, inputting a hardware trigger is ignored and A/D conversion does not start.

Figure 15 - 29 Example of Hardware Trigger Wait Mode (Scan Mode, Sequential Conversion Mode) Operation Timing

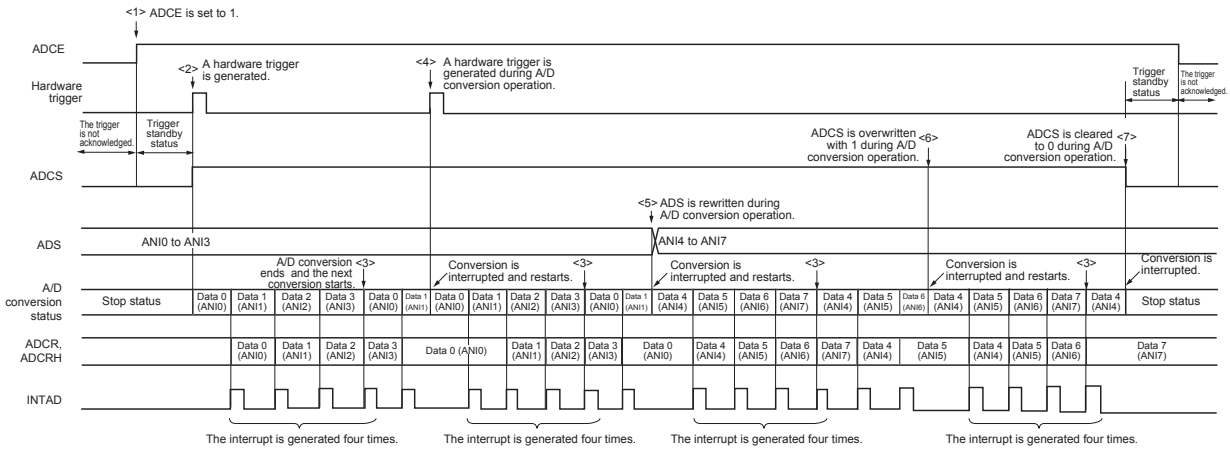

15.6.12 Hardware trigger wait mode (scan mode, one-shot conversion mode)

<1> In the stop status, the ADCE bit of A/D converter mode register 0 (ADM0) is set to 1, and the system enters the A/D conversion standby status.

<2> If a hardware trigger is input while in the hardware trigger standby status, A/D conversion is performed on the four analog input channels specified by scan 0 to scan 3, which are specified by the analog input channel specification register (ADS). The ADCS bit of the ADM0 register is automatically set to 1 according to the hardware trigger input. A/D conversion is performed on the analog input channels in order, starting with that specified by scan 0.

<3> A/D conversion is sequentially performed on the four analog input channels, the conversion results are stored in the A/D conversion result register (ADCR, ADCRH) each time conversion ends, and the A/D conversion end interrupt request signal (INTAD) is generated.

<4> After A/D conversion ends, the ADCS bit is automatically cleared to 0, and the A/D converter enters the stop status.

<5> If a hardware trigger is input during conversion operation, the current A/D conversion is interrupted, and conversion restarts at the first channel. The partially converted data is discarded.

<6> When the value of the ADS register is rewritten or overwritten during conversion operation, the current A/D conversion is interrupted, and A/D conversion is performed on the first channel respecified by the ADS register. The partially converted data is discarded.

<7> When ADCS is overwritten with 1 during conversion operation, the current A/D conversion is interrupted, and conversion restarts. The partially converted data is discarded.

<8> When ADCS is cleared to 0 during conversion operation, the current A/D conversion is interrupted, the system enters the hardware trigger standby status, and the A/D converter enters the stop status. When ADCE = 0, inputting a hardware trigger is ignored and A/D conversion does not start.

Figure 15 - 30 Example of Hardware Trigger Wait Mode (Scan Mode, One-Shot Conversion Mode) Operation Timing

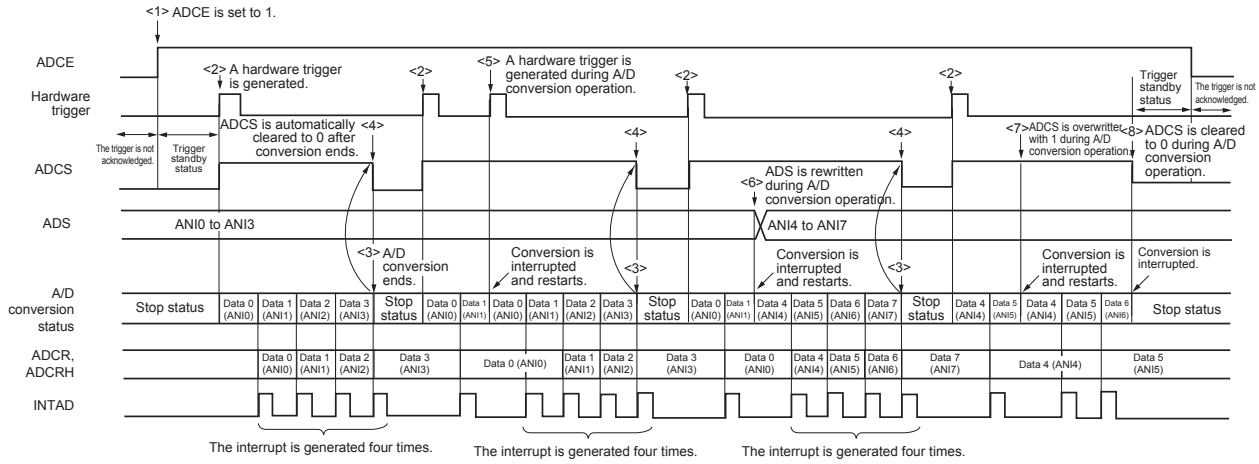

15.7 A/D Converter Setup Flowchart

The A/D converter setup flowchart in each operation mode is described below.

15.7.1 Setting up software trigger mode

Figure 15 - 31 Setting up Software Trigger Mode

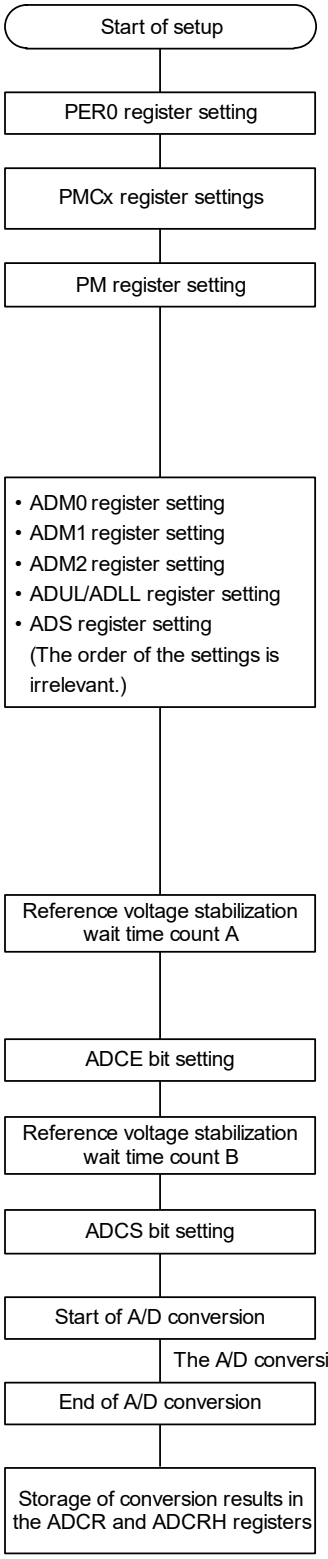

The ADCEN bit of the PER0 register is set (1), and supplying the clock starts.

The ports are set to analog input.
ANI0 to ANI7 and ANI16 to ANI24 pins: Set using the PMCx register

The ports are set to the input mode.

- ADM0 register
  FR2 to FR0, LV1, and LV0 bits:
  These are used to specify the A/D conversion time.
  ADMD bit: Select mode/scan mode
- ADM1 register
  ADTMD1 and ADTMD0 bits:
  These are used to specify the software trigger mode.
  ADSCM bit: Sequential conversion mode/one-shot conversion mode
- ADM2 register
  ADREFP1, ADREFP0, and ADREFM bits:
  These are used to select the reference voltage.
  ADRCK bit: This is used to select the range for the A/D conversion result comparison value generated by the interrupt signal from AREA1, AREA3, and AREA2.
  ADTYP bit: 8-bit/10-bit resolution
- ADUL/ADLL register
  These are used to specify the upper limit and lower limit A/D conversion result comparison values.
- ADS register
  ADS4 to ADS0 bits: These are used to select the analog input channels.

The reference voltage stabilization wait time A indicated by stabilization wait time count A is required when the value of the ADREFP1 and ADREFP0 bits is changed.
If change the ADREFP1 and ADREFP0 = 1, 0: A = 5 μs
If change the ADREFP1 and ADREFP0 = 0, 0 or 0, 1: No wait

The ADCE bit of the ADM0 register is set (1), and the system enters the A/D conversion standby status.

The Reference voltage stabilization wait time count B (1 μs) is counted by the software.

After counting up to the reference voltage stabilization wait time B ends, the ADCS bit of the ADM0 register is set (1), and A/D conversion starts.

The A/D conversion end interrupt (INTAD) is generated. Note

The conversion results are stored in the ADCR and ADCRH registers

Note Depending on the settings of the ADRCK bit and ADUL/ADLL register, there is a possibility of no interrupt signal being generated. In this case, the results are not stored in the ADCR, ADCRH register.

15.7.2 Setting up hardware trigger no-wait mode

Figure 15 - 32 Setting up Hardware Trigger No-Wait Mode

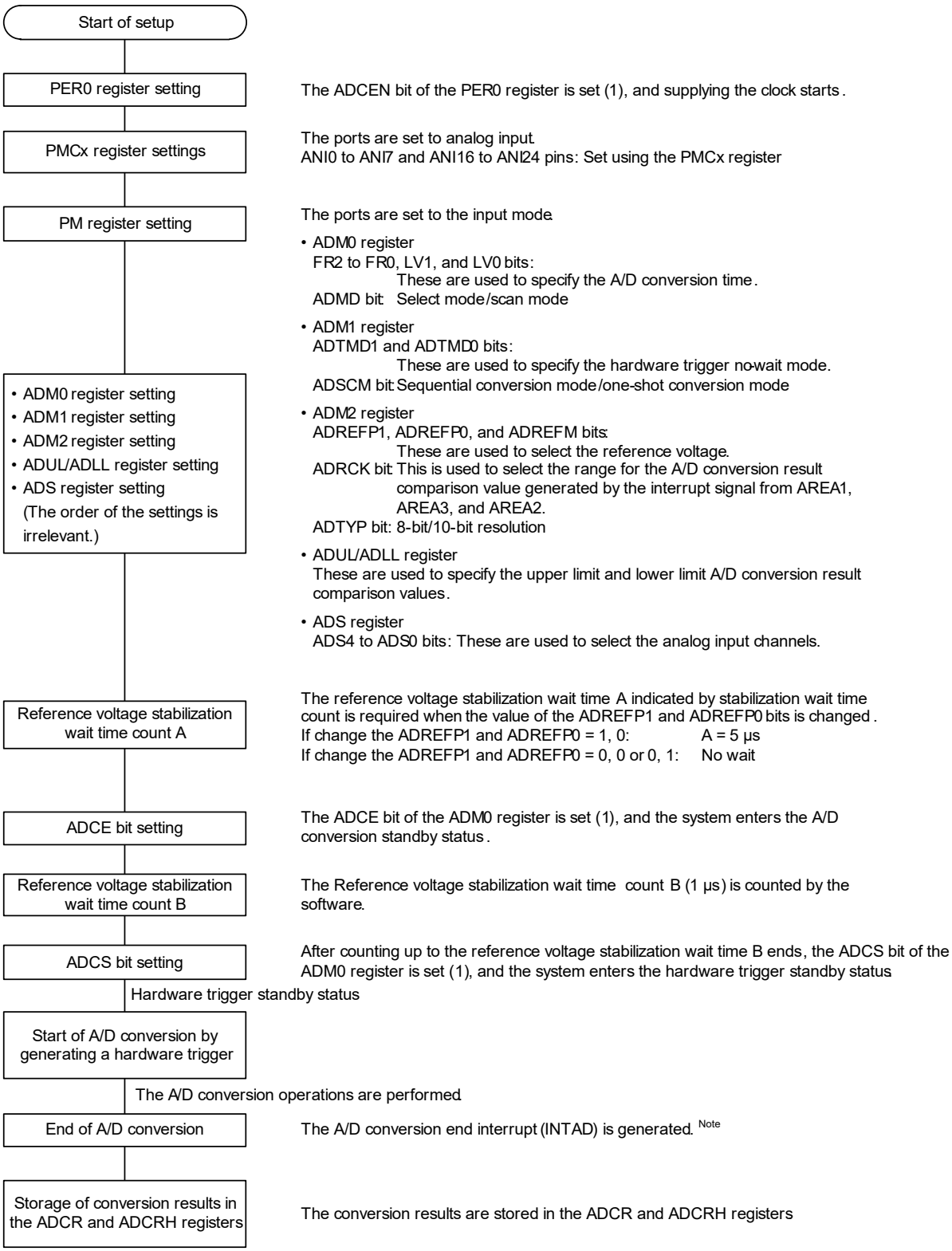

Note Depending on the settings of the ADRCK bit and ADUL/ADLL register, there is a possibility of no interrupt signal being generated. In this case, the results are not stored in the ADCR, ADCRH register.

15.7.3 Setting up hardware trigger wait mode

Figure 15 - 33 Setting up Hardware Trigger Wait Mode

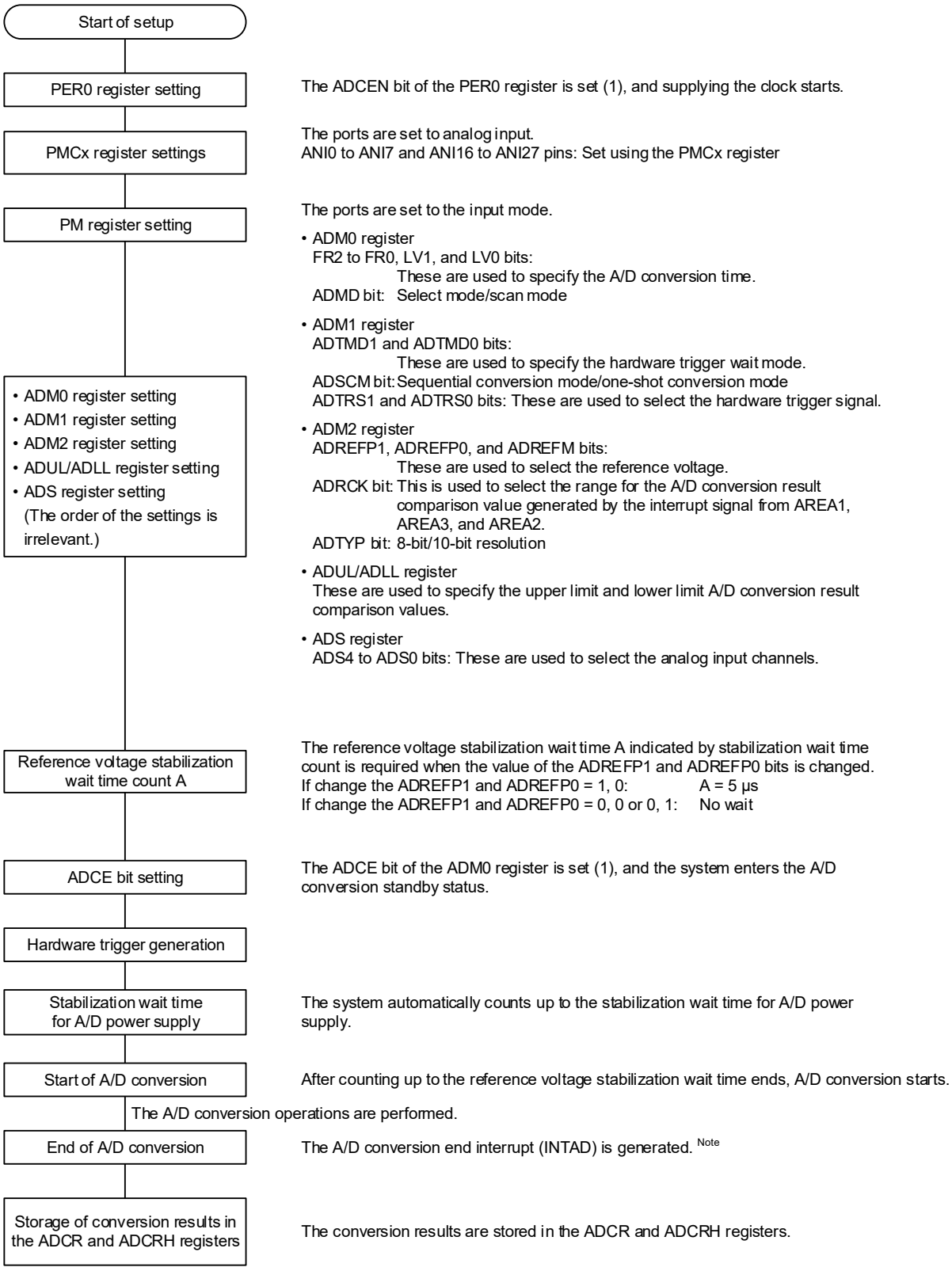

Note Depending on the settings of the ADRCK bit and ADUL/ADLL register, there is a possibility of no interrupt signal being generated. In this case, the results are not stored in the ADCR, ADCRH register.

15.7.4 Setup when temperature sensor output voltage/internal reference voltage is selected (example for software trigger mode and one-shot conversion mode)

Figure 15 - 34 Setup when temperature sensor output voltage/internal reference voltage is selected

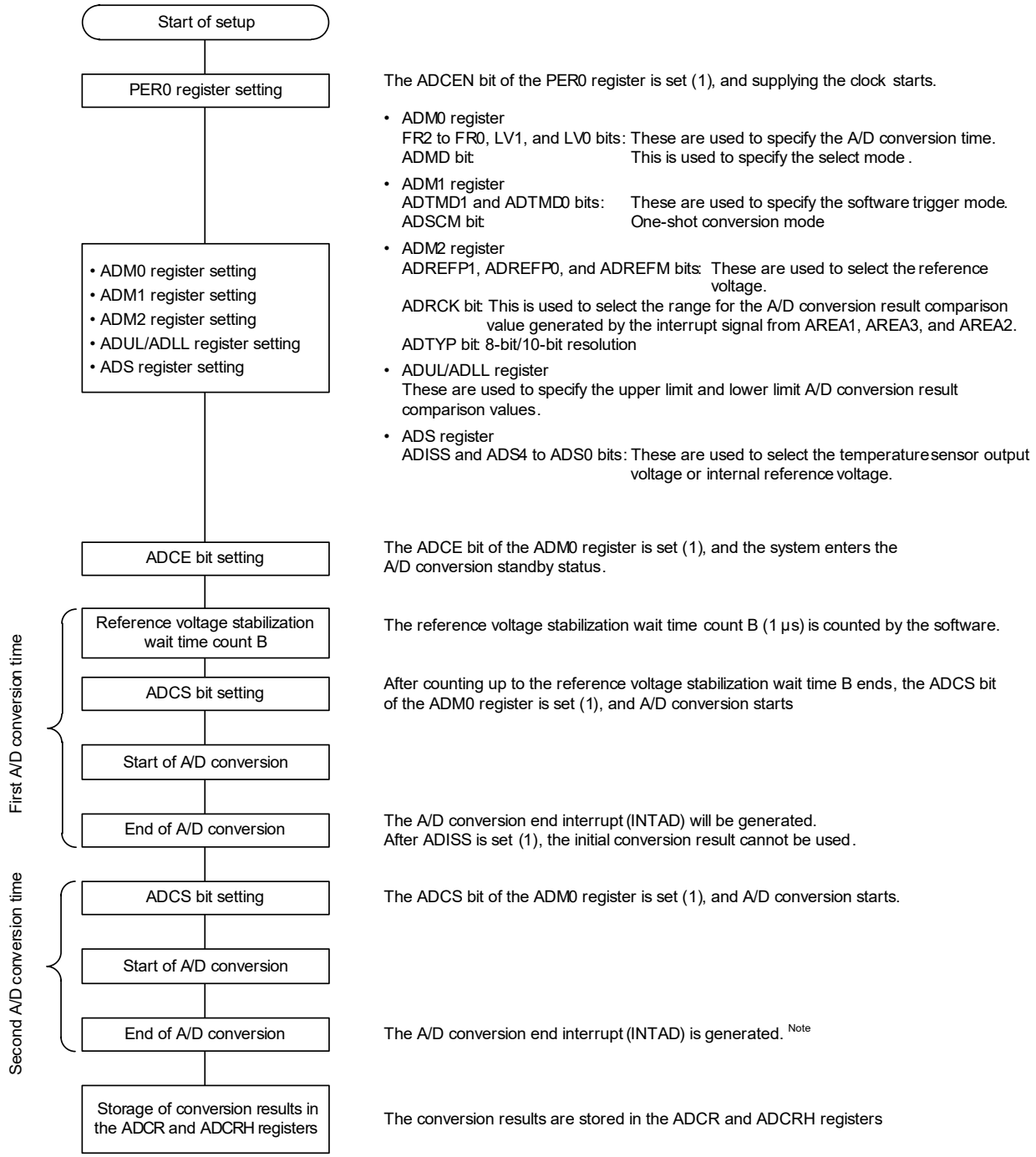

Note Depending on the settings of the ADRCK bit and ADUL/ADLL register, there is a possibility of no interrupt signal being generated. In this case, the results are not stored in the ADCR, ADCRH register.

Caution **This setting can be used only in HS (high-speed main) mode.**

15.7.5 Setting up test mode

Figure 15 - 35 Setting up Test Mode

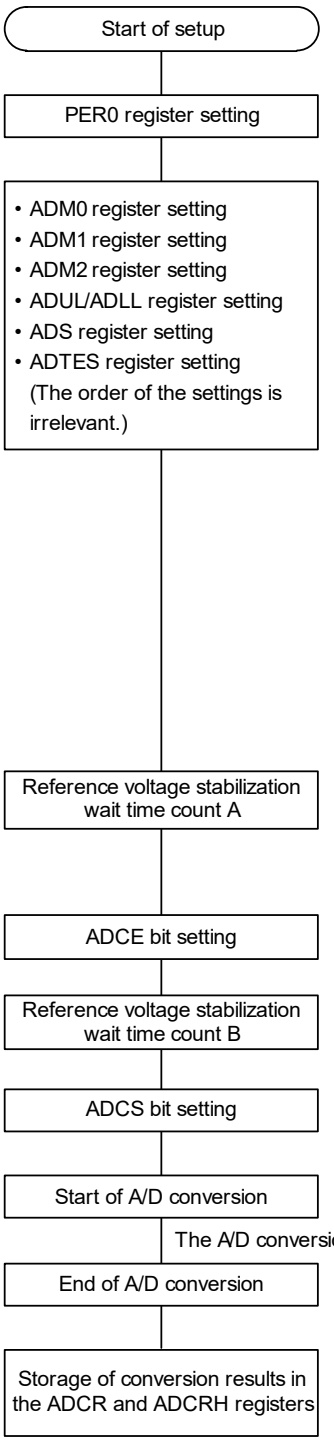

The ADCEN bit of the PER0 register is set (1), and supplying the clock starts.

- ADM0 register
  FR2 to FR0, LV1, and LV0 bits: These are used to specify the A/D conversion time.
  ADMD bit: This is used to specify the select mode
- ADM1 register
  ADTMD1 and ADTMD0 bits: These are used to specify the software trigger mode.
  ADSCM bit: This is used to specify the one-shot conversion mode.
- ADM2 register
  ADREFP1, ADREFP0, and ADREFM bits: These are used to select for the reference voltage.
  ADRCK bit: This is used to set the range for the A/D conversion result comparison value generated by the interrupt signal to AREA2.
  ADTYP bit: This is used to specify 10-bit resolution.
- ADUL/ADLL register
  These set ADUL to FFH and ADLL to00H (initial values).
- ADS register
  ADS4 to ADS0 bits: These are used to set to ANI0.
- ADTES register
  ADTES1, ADTES0 bits: AV_{REFM}/AV_{REFP}

The reference voltage stabilization wait time A indicated by stabilization wait time count is required when the value of the ADREFP1 and ADREFP0 bits is changed.
If change the ADREFP1 and ADREFP0 = 1, 0: A = 5 μs
If change the ADREFP1 and ADREFP0 = 0, 0 or 0, 1: No wait

The ADCE bit of the ADM0 register is set (1), and the system enters the A/D conversion standby status.

The reference voltage stabilization wait time count B (1 μs) is counted by the software.

After counting up to the reference voltage stabilization wait time B ends, the ADCS bit of the ADM0 register is set (1), and A/D conversion starts.

The A/D conversion operations are performed.

The A/D conversion end interrupt (INTAD) is generated. Note

The conversion results are stored in the ADCR and ADCRH registers

Note Depending on the settings of the ADRCK bit and ADUL/ADLL register, there is a possibility of no interrupt signal being generated. In this case, the results are not stored in the ADCR, ADCRH register.

Caution **For the procedure for testing the A/D converter, see 30.3.8 A/D test function.**

15.8 SNOOZE Mode Function

In the SNOOZE mode, A/D conversion is triggered by inputting a hardware trigger in the STOP mode. Normally, A/D conversion is stopped while in the STOP mode, but, by using the SNOOZE mode, A/D conversion can be performed without operating the CPU by inputting a hardware trigger. This is effective for reducing the operation current.
If the A/D conversion result range is specified using the ADUL and ADLL registers, A/D conversion results can be judged at a certain interval of time in SNOOZE mode. Using this function enables power supply voltage monitoring and input key judgment based on A/D inputs.

In the SNOOZE mode, only the following two conversion modes can be used:
• Hardware trigger wait mode (select mode, one-shot conversion mode)
• Hardware trigger wait mode (scan mode, one-shot conversion mode)

Caution That the SNOOZE mode can only be specified when the high-speed on-chip oscillator clock is selected for f_{CLK}.

Figure 15 - 36 Block Diagram When Using SNOOZE Mode Function

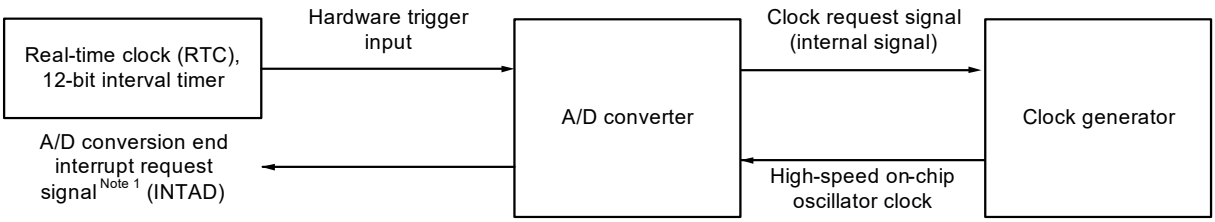

When using the SNOOZE mode function, the initial setting of each register is specified before switching to the STOP mode. (For details about these settings, see **15.7.3 Setting up hardware trigger wait mode** Note 2.) At this time, bit 2 (AWC) of A/D converter mode register 2 (ADM2) is set to 1. After the initial settings are specified, bit 0 (ADCE) of A/D converter mode register 0 (ADM0) is set to 1.
If a hardware trigger is input after switching to the STOP mode, the high-speed on-chip oscillator clock is supplied to the A/D converter. After supplying this clock, the system automatically counts up to the A/D power supply stabilization wait time, and then A/D conversion starts.
The SNOOZE mode operation after A/D conversion ends differs depending on whether an interrupt signal is generated Note 1.

Note 1. Depending on the setting of the A/D conversion result comparison function (ADRCK bit, ADUL/ADLL register), there is a possibility of no interrupt signal being generated.
Note 2. Be sure to set the ADM1 register to E1H, E2H or E3H.

Remark The hardware trigger is event selected by ELC, INTRTC or INTIT.
Specify the hardware trigger by using the A/D Converter Mode Register 1 (ADM1).

(1) If an interrupt is generated after A/D conversion ends

If the A/D conversion result value is inside the range of values specified by the A/D conversion result comparison function (which is set up by using the ADRCK bit and ADUL/ADLL register), the A/D conversion end interrupt request signal (INTAD) is generated.

- While in the select mode

When A/D conversion ends and an A/D conversion end interrupt request signal (INTAD) is generated, the A/D converter returns to normal operation mode from SNOOZE mode. At this time, be sure to clear bit 2 (AWC = 0: SNOOZE mode release) of the A/D converter mode register 2 (ADM2). If the AWC bit is left set to 1, A/D conversion will not start normally in the subsequent SNOOZE or normal operation mode.

- While in the scan mode

If even one A/D conversion end interrupt request signal (INTAD) is generated during A/D conversion of the four channels, the clock request signal remains at the high level, and the A/D converter switches from the SNOOZE mode to the normal operation mode. At this time, be sure to clear bit 2 (AWC = 0: SNOOZE mode release) of A/D converter mode register 2 (ADM2) to 0. If the AWC bit is left set to 1, A/D conversion will not start normally in the subsequent SNOOZE or normal operation mode.

Figure 15 - 37 Operation Example When Interrupt Is Generated After A/D Conversion Ends (While in Scan Mode)

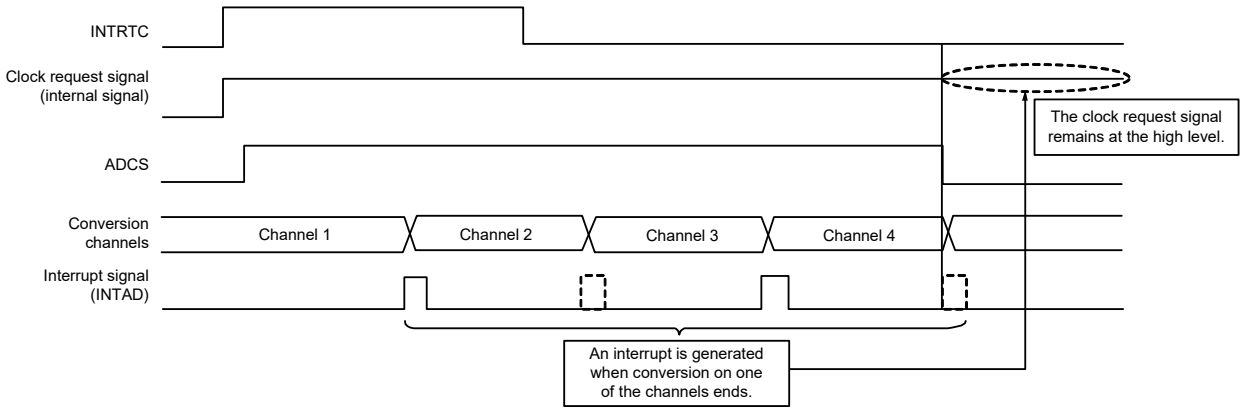

(2) If no interrupt is generated after A/D conversion ends

If the A/D conversion result value is outside the range of values specified by the A/D conversion result comparison function (which is set up by using the ADRCK bit and ADUL/ADLL register), the A/D conversion end interrupt request signal (INTAD) is not generated.

- While in the select mode

  If the A/D conversion end interrupt request signal (INTAD) is not generated after A/D conversion ends, the clock request signal (an internal signal) is automatically set to the low level, and supplying the high-speed on-chip oscillator clock stops. If a hardware trigger is input later, A/D conversion work is again performed in the SNOOZE mode.

- While in the scan mode

  If the A/D conversion end interrupt request signal (INTAD) is not generated even once during A/D conversion of the four channels, the clock request signal (an internal signal) is automatically set to the low level after A/D conversion of the four channels ends, and supplying the high-speed on-chip oscillator clock stops. If a hardware trigger is input later, A/D conversion work is again performed in the SNOOZE mode.

Figure 15 - 38 Operation Example When No Interrupt Is Generated After A/D Conversion Ends (While in Scan Mode)

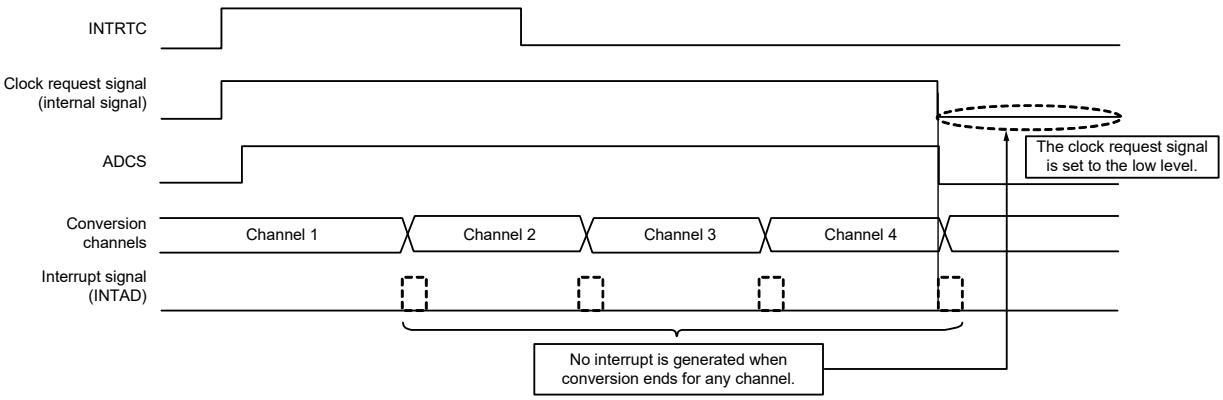

Figure 15 - 39 Flowchart for Setting up SNOOZE Mode

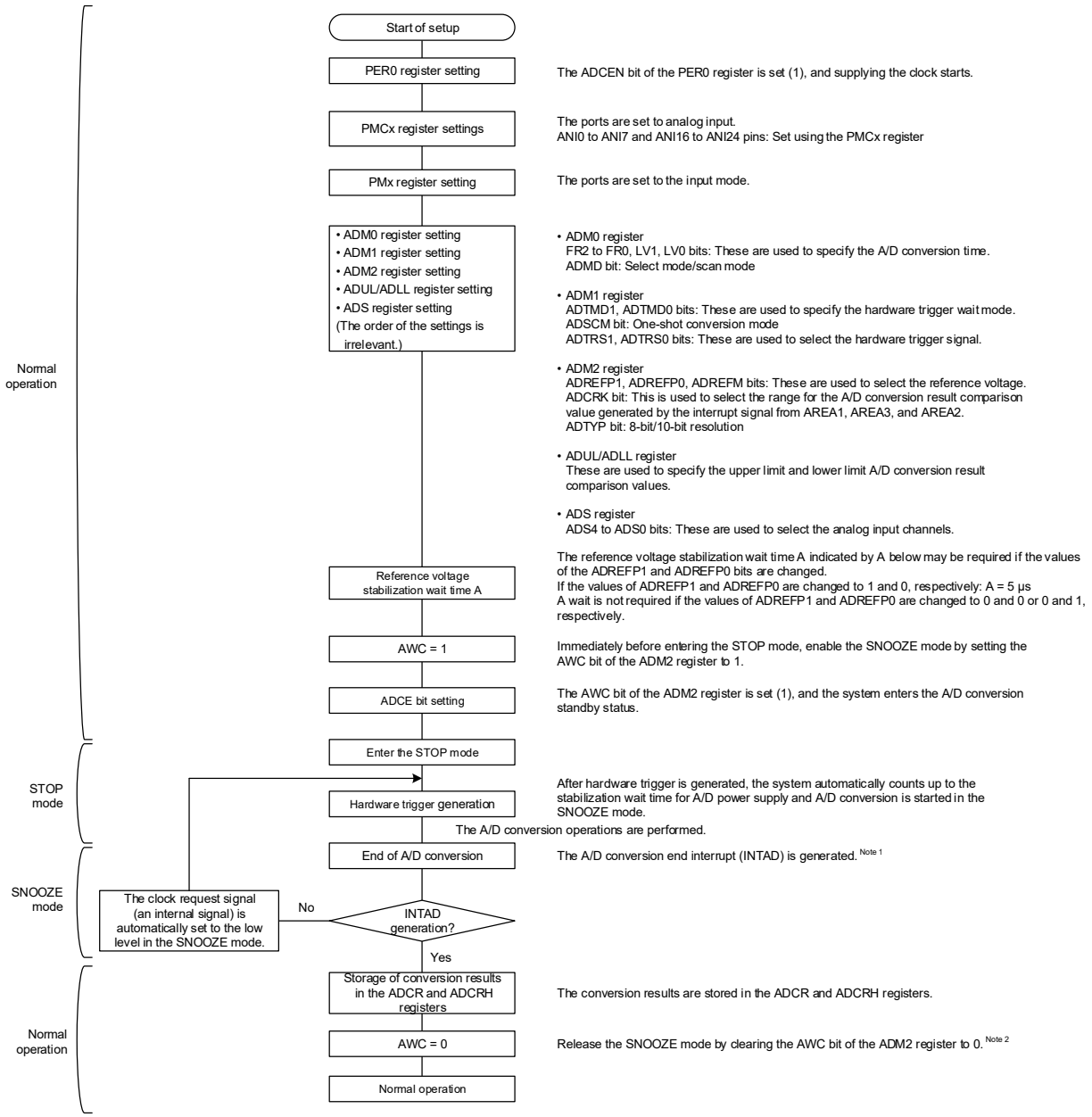

Note 1. If the A/D conversion end interrupt request signal (INTAD) is not generated by setting ADRCK bit and ADUL/ADLL register, the result is not stored in the ADCR and ADCRH registers.
The system enters the STOP mode again. If a hardware trigger is input later, A/D conversion operation is again performed in the SNOOZE mode.

Note 2. If the AWC bit is left set to 1, A/D conversion will not start normally in spite of the subsequent SNOOZE or normal operation mode. Be sure to clear the AWC bit to 0.

15.9 How to Read A/D Converter Characteristics Table

Here, special terms unique to the A/D converter are explained.

(1) Resolution

This is the minimum analog input voltage that can be identified. That is, the percentage of the analog input voltage per bit of digital output is called 1LSB (Least Significant Bit). The percentage of 1LSB with respect to the full scale is expressed by %FSR (Full Scale Range).

1LSB is as follows when the resolution is 10 bits.

$1\ LSB = 1/2^{10} = 1/1024$
$= 0.098\%FSR$

Accuracy has no relation to resolution, but is determined by overall error.

(2) Overall error

This shows the maximum error value between the actual measured value and the theoretical value.
Zero-scale error, full-scale error, integral linearity error, and differential linearity errors that are combinations of these express the overall error.
Note that the quantization error is not included in the overall error in the characteristics table.

(3) Quantization error

When analog values are converted to digital values, a ±1/2LSB error naturally occurs. In an A/D converter, an analog input voltage in a range of ±1/2LSB is converted to the same digital code, so a quantization error cannot be avoided.
Note that the quantization error is not included in the overall error, zero-scale error, full-scale error, integral linearity error, and differential linearity error in the characteristics table.

Figure 15 - 40 Overall Error

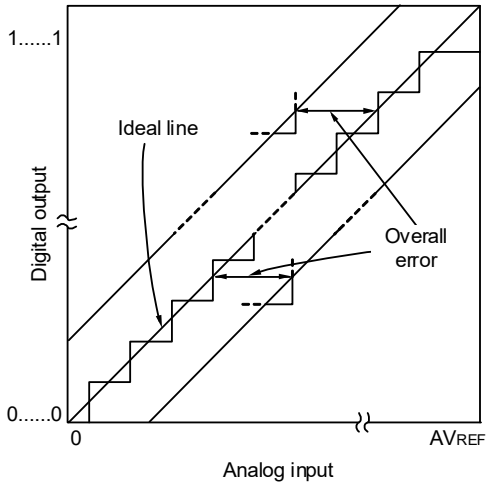

Figure 15 - 41 Quantization Error

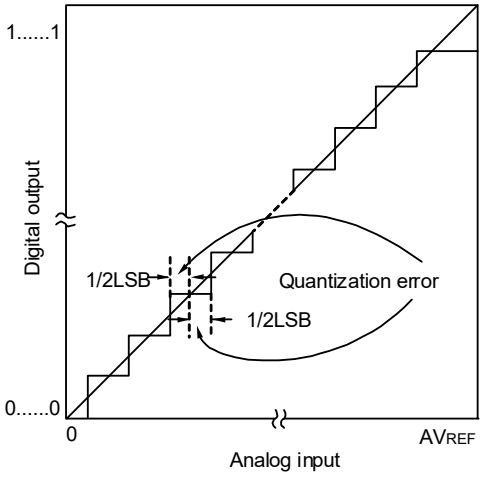

(4) Zero-scale error

This shows the difference between the actual measurement value of the analog input voltage and the theoretical value (1/2LSB) when the digital output changes from 0.....000 to 0.....001.

If the actual measurement value is greater than the theoretical value, it shows the difference between the actual measurement value of the analog input voltage and the theoretical value (3/2LSB) when the digital output changes from 0……001 to 0……010.

(5) Full-scale error

This shows the difference between the actual measurement value of the analog input voltage and the theoretical value (Full-scale – 3/2LSB) when the digital output changes from 1.....110 to 1.....111.

(6) Integral linearity error

This shows the degree to which the conversion characteristics deviate from the ideal linear relationship. It expresses the maximum value of the difference between the actual measurement value and the ideal straight line when the zero-scale error and full-scale error are 0.

(7) Differential linearity error

While the ideal width of code output is 1LSB, this indicates the difference between the actual measurement value and the ideal value.

Figure 15 - 42 Zero-Scale Error

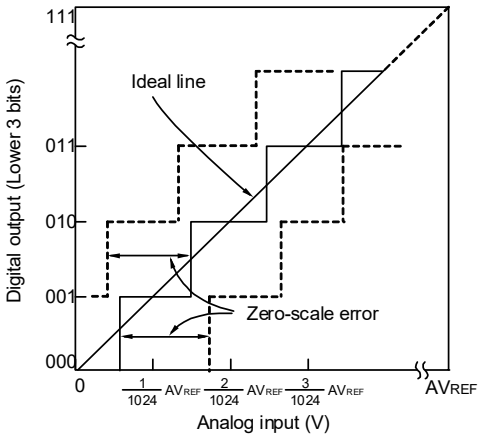

Figure 15 - 43 Full-Scale Error

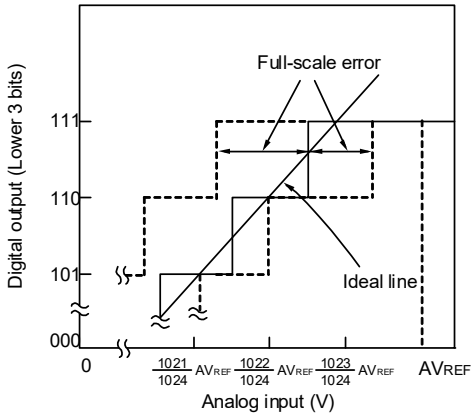

Figure 15 - 44 Integral Linearity Error

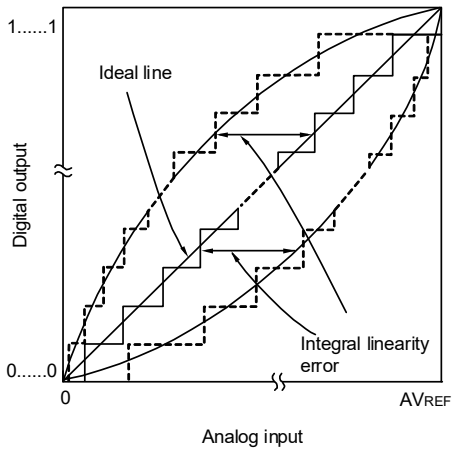

Figure 15 - 45 Differential Linearity Error

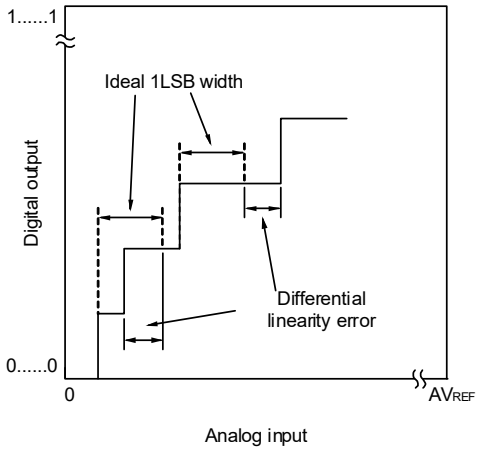

(8) Conversion time

This expresses the time from the start of sampling to when the digital output is obtained.

The sampling time is included in the conversion time in the characteristics table.

(9) Sampling time

This is the time the analog switch is turned on for the analog voltage to be sampled by the sample & hold circuit.

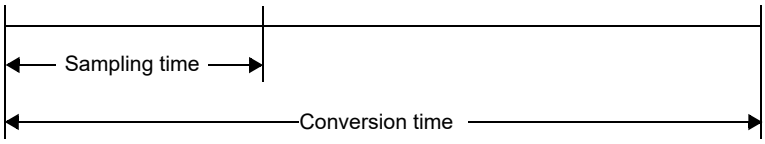

15.10 Cautions for A/D Converter

(1) Operating current in STOP mode

Shift to STOP mode after stopping the A/D converter (by setting bit 7 (ADCS) of A/D converter mode register 0 (ADM0) to 0). The operating current can be reduced by setting bit 0 (ADCE) of the ADM0 register to 0 at the same time.

To restart from the standby status, clear bit 0 (ADIF) of interrupt request flag register 1H (IF1H) to 0 and start operation.

(2) Input range of ANI0 to ANI7 and ANI16 to ANI24 pins

Observe the rated range of the ANI0 to ANI7 and ANI16 to ANI24 pins input voltage. If a voltage exceeding V_{DD} and AV_{REFP} or below V_{SS} and AV_{REFM} (even in the range of absolute maximum ratings) is input to an analog input channel, the converted value of that channel becomes undefined. In addition, the converted values of the other channels may also be affected.

When internal reference voltage (1.45 V) is selected reference voltage for the + side of the A/D converter, do not input voltage exceeding internal reference voltage (1.45 V) to a pin selected by the ADS register. However, it is no problem that a pin not selected by the ADS register is input voltage exceeding the internal reference voltage (1.45 V).

Caution Internal reference voltage (1.45 V) can be used only in HS (high-speed main) mode.

(3) Conflicting operations

<1> Conflict between the A/D conversion result register (ADCR, ADCRH) write and the ADCR or ADCRH register read by instruction upon the end of conversion

The ADCR or ADCRH register read has priority. After the read operation, the new conversion result is written to the ADCR or ADCRH registers.

<2> Conflict between the ADCR or ADCRH register write and the A/D converter mode register 0 (ADM0) write or the analog input channel specification register (ADS) write upon the end of conversion

The ADM0 or ADS registers write has priority. The ADCR or ADCRH register write is not performed, nor is the conversion end interrupt signal (INTAD) generated.

(4) Noise countermeasures

To maintain the 10-bit resolution, attention must be paid to noise input to the AV_{REFP}, V_{DD}, ANI0 to ANI7, and ANI16 to ANI24 pins.

<1> Connect a capacitor with a low equivalent resistance and a good frequency response to the power supply.

<2> The higher the output impedance of the analog input source, the greater the influence. To reduce the noise, connecting external capacitor as shown in Figure 15 - 46 is recommended.

<3> Do not switch these pins with other pins during conversion.

<4> The accuracy is improved if the HALT mode is set immediately after the start of conversion.

Figure 15 - 46 Analog Input Pin Connection

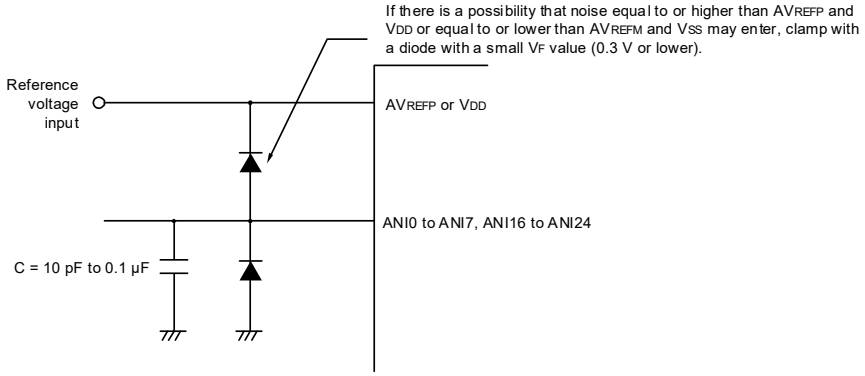

(5) Analog input (ANIn) pins

<1> The analog input pins (ANI0 to ANI7, ANI16 to ANI24) are also used as input port pins (P20 to P27, P03, P02, P147, P120, P10 to P14).

When A/D conversion is performed with any of the ANI0 to ANI7 and ANI16 to ANI24 pins selected, do not change to output value P20 to P27, P03, P02, P147, P120, and P10 to P14 while conversion is in progress; otherwise the conversion resolution may be degraded.

<2> If a pin adjacent to a pin that is being A/D converted is used as a digital I/O port pin, the A/D conversion result might differ from the expected value due to a coupling noise. Be sure to prevent such a pulse from being input or output.

(6) Input impedance of analog input (ANIn) pins

This A/D converter charges a sampling capacitor for sampling during sampling time.

Therefore, only a leakage current flows when sampling is not in progress, and a current that charges the capacitor flows during sampling. Consequently, the input impedance fluctuates depending on whether sampling is in progress, and on the other states.

To make sure that sampling is effective, however, we recommend using the converter with analog input sources that have output impedances no greater than 1 kΩ. If a source has a higher output impedance, lengthen the sampling time or connect a larger capacitor (with a value of about 0.1 μF) to the pin from among ANI0 to ANI7 and ANI16 to ANI24 to which the source is connected (see **Figure 15 - 46**). The sampling capacitor may be being charged while the setting of the ADCS bit is 0 and immediately after sampling is restarted and so is not defined at these times. Accordingly, the state of conversion is undefined after charging starts in the next round of conversion after the value of the ADCS bit has been 1 or when conversion is repeated. Thus, to secure full charging regardless of the size of fluctuations in the analog signal, ensure that the output impedances of the sources of analog inputs are low or secure sufficient time for the completion of conversion.

(7) Interrupt request flag (ADIF)

The interrupt request flag (ADIF) is not cleared even if the analog input channel specification register (ADS) is changed.

Therefore, if an analog input pin is changed during A/D conversion, the A/D conversion result and ADIF flag for the pre-change analog input may be set just before the ADS register rewrite. Caution is therefore required since, at this time, when ADIF flag is read immediately after the ADS register rewrite, ADIF flag is set despite the fact A/D conversion for the post-change analog input has not ended.

When A/D conversion is stopped and then resumed, clear ADIF flag before the A/D conversion operation is resumed.

Figure 15 - 47 Timing of A/D Conversion End Interrupt Request Generation

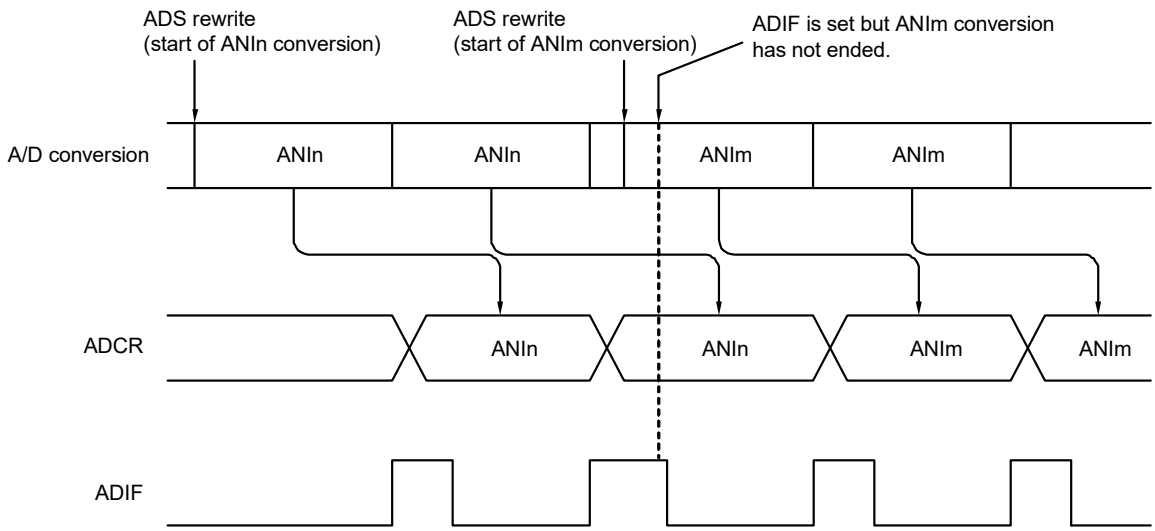

(8) Conversion results just after A/D conversion start

While in the software trigger mode or hardware trigger no-wait mode, the first A/D conversion value immediately after A/D conversion starts may not fall within the rating range if the ADCS bit is set to 1 within 1 μs after the ADCE bit was set to 1. Take measures such as polling the A/D conversion end interrupt request (INTAD) and removing the first conversion result.

(9) A/D conversion result register (ADCR, ADCRH) read operation

When a write operation is performed to A/D converter mode register 0 (ADM0), analog input channel specification register (ADS), and port mode control register (PMCxx), the contents of the ADCR and ADCRH registers may become undefined. Read the conversion result following conversion completion before writing to the ADM0, ADS, or PMC register. Using a timing other than the above may cause an incorrect conversion result to be read.

(10) Internal equivalent circuit

The equivalent circuit of the analog input block is shown below.

Figure 15 - 48 Internal Equivalent Circuit of ANIn Pin

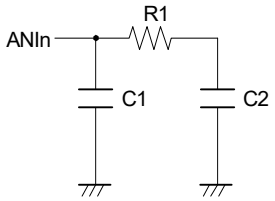

Table 15 - 7 Resistance and Capacitance Values of Equivalent Circuit (Reference Values)

AV_{REFP}, V_{DD}	ANIn Pins	R1 [kΩ]	C1 [pF]	C2 [pF]
3.6 V ≤ V_{DD} ≤ 5.5 V	ANI0 to ANI7	14	8	2.5
	ANI16 to ANI24	18	8	7.0
2.7 V ≤ V_{DD} < 3.6 V	ANI0 to ANI7	39	8	2.5
	ANI16 to ANI24	53	8	7.0
1.8 V ≤ V_{DD} < 2.7 V	ANI0 to ANI7	231	8	2.5
	ANI16 to ANI24	321	8	7.0
1.6 V ≤ V_{DD} < 2.7 V	ANI0 to ANI7	632	8	2.5
	ANI16 to ANI24	902	8	7.0

Remark The resistance and capacitance values shown in Table 15 - 7 are not guaranteed values.

(11) Starting the A/D converter

Start the A/D converter after the AV_{REFP} and V_{DD} voltages stabilize.

(12) Temperature sensor output

If the internal reference voltage (1.45 V) is selected as the reference voltage of comparator 0 or comparator 1, the temperature sensor output cannot be selected.

(13) When using AV_{REFP}/AV_{REFM}

When using AV_{REFP}/AV_{REFM}, set ANI0/ANI1 to analog input (PMC20/PMC21 = 1) and select the input mode for the port mode register.

(14) Power stabilization time

After setting ADCE = 1, the A/D power stabilization wait time until ADCS = 1 is set must be 1 μs or more even in both the normal mode and low-voltage mode.

CHAPTER 16 D/A CONVERTER

The number of D/A converter channels differs depending on the product.

Table 16 - 1 Output Pin of D/A Converter

D/A output pin	24-pin	32, 36, 48, 64-pin
ANO0	√	√
ANO1	—	√

Caution Most of the following descriptions in this chapter use the 64-pin products as an example.

16.1 Functions of D/A Converter

The D/A converter is an 8-bit resolution converter that converts digital inputs into analog signals. It is used to control analog outputs for two independent channels (ANO0, ANO1).

The D/A converter has the following features.

- 8-bit resolution × 2 channels
- R-2R ladder method
- Output analog voltage
  - 8-bit resolution: V_{DD} × m8/256 (m8: Value set to DACSi register)
- Operation mode
  - Normal mode
  - Real-time output mode

Remark i = 0, 1

16.2 Configuration of D/A Converter

Figure 16 - 1 shows the Block Diagram of D/A Converter.

Figure 16 - 1 Block Diagram of D/A Converter

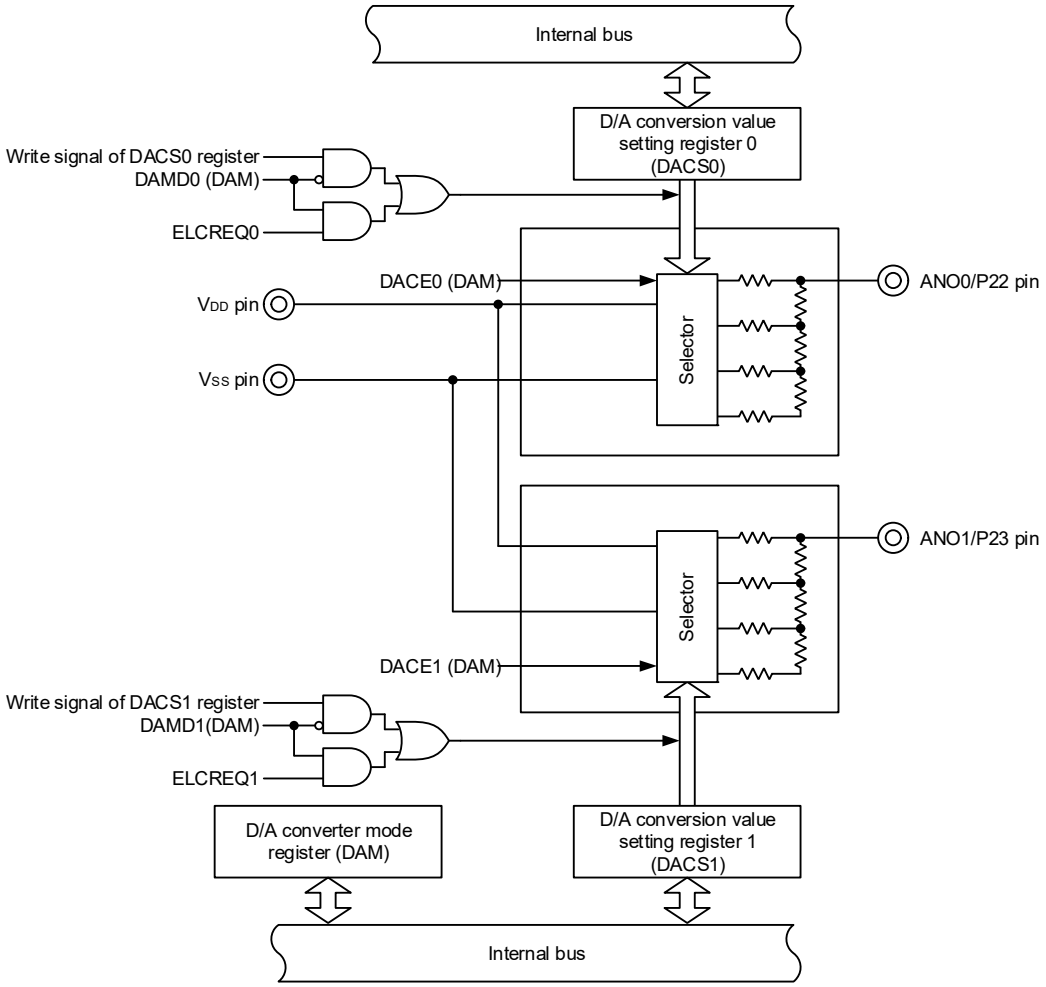

Remark ELCREQ0 and ELCREQ1 are trigger signals (event signals from the ELC) that are used in the real-time output mode.

16.3 Registers Controlling D/A Converter

The D/A converter is controlled by the following registers.

- Peripheral enable register 1 (PER1)
- D/A converter mode register (DAM)
- D/A conversion value setting registers 0, 1 (DACS0, DACS1)
- Port mode control register (PMC2)
- Event output destination select register n (ELSELRn) (n = 00 to 21)

16.3.1 Peripheral enable register 1 (PER1)

The PER1 register is used to enable or disable use of each peripheral hardware macro. Clock supply to a hardware macro that is not used is stopped in order to reduce the power consumption and noise.
When the D/A converter is used, be sure to set bit 7 (DACEN) of this register to 1.
The PER1 register can be set by a 1-bit or 8-bit memory manipulation instruction.
Reset signal generation clears this register to 00H.

Figure 16 - 2 Format of Peripheral enable register 1 (PER1)

Address: F007AH After reset: 00H R/W

Symbol	7	6	5	4	3	2	1	0
PER1	DACEN	TRGEN	PGACMPEN	TRD0EN	DTCEN	PWMOPEN	TRXEN	TRJ0EN

DACEN	Control of D/A converter input clock
0	Stops input clock supply. • SFR used by the D/A converter cannot be written. • The D/A converter is in the reset status.
1	Supplies input clock. • SFR used by the D/A converter can be read/written.

Caution When setting the D/A converter, be sure to set DACEN to 1 first.
If DACEN = 0, writing to a control register of the D/A converter is ignored, and all read values are default values (except for port mode register 2 (PM2), and port register 2 (P2)).

16.3.2 D/A converter mode register (DAM)

This register controls the operation of the D/A converter.
The DAM register can be set by a 1-bit or 8-bit memory manipulation instruction.
Reset signal generation clears this register to 00H.

Figure 16 - 3 Format of D/A converter mode register (DAM)

Address: FFF36H After reset: 00H R/W

Symbol	7	6	5	4	3	2	1	0
DAM	0	0	DACE1	DACE0	0	0	DAMD1	DAMD0

DACEi	D/A conversion operation control
0	Stops D/A conversion operation
1	Enables D/A conversion operation

DAMDi	D/A converter operation mode selection
0	Normal mode
1	Real-time output mode

Remark i = 0, 1

16.3.3 D/A conversion value setting register i (DACSi) (i = 0, 1)

This register is used to set the analog voltage value to be output to the ANO0 and ANO1 pins when the D/A converter is used.
The DACSi register can be read by an 8-bit memory manipulation instruction.
Reset signal generation clears this register to 00H.

Figure 16 - 4 Format of D/A conversion value setting register i (DACSi) (i = 0, 1)

Address: FFF34H (DACS0), FFF35H (DACS1) After reset: 00H R/W

Symbol	7	6	5	4	3	2	1	0
DACSi	DACSi7	DACSi6	DACSi5	DACSi4	DACSi3	DACSi2	DACSi1	DACSi0

Remark The relation between the resolution and analog output voltage (VANOi) of the D/A converter are as follows.
$VANOi = V_{DD} \times (DACSi)/256$

When the D/A converter is not used, set the DACEi bit to 0 (output disable) and set the DACSi register to 00H to prevent current from flowing into the R-2R resistor ladder to reduce unnecessary current consumption.

16.3.4 Event output destination select register n (ELSELRn) (n = 00 to 21)

When the real-time output mode of the D/A converter is used, D/A conversion is performed using an event signal from the event link controller as an activation trigger.
For details, see **23.3.1 Event output destination select register n (ELSELRn) (n = 00 to 21)**.

16.3.5 Registers controlling port functions of analog input pins

Set the registers (port mode register (PMxx) and port mode control register (PMCxx)) that control the port functions shared with the analog output of the D/A converter.
For details, see **4.3.1 Port mode registers (PMxx)** and **4.3.6 Port mode control registers (PMCxx)**.
When using the ANO0 and ANO1 pins for analog output of the D/A converter, set the port mode register (PMxx) bit corresponding to each port to 1, and specify analog output using the port mode control register (PMCxx).

16.4 Operations of D/A Converter

16.4.1 Operation in Normal Mode

D/A conversion is performed using write operation to the DACSi register as the trigger.
The setting method is described below.

<1> Set the DACEN bit of the PER1 register (peripheral enable register 1) to 1 to start the supply of the input clock to the D/A converter.
<2> Use the port mode control register (PMC2) to set the ports to analog pins.
<3> Set the DAMDi bit of the DAM register (D/A converter mode register) to 0 (normal mode).
<4> Set the analog voltage value to be output to the ANOi pin to the DACSi register (D/A conversion value setting register i).

Steps <1> and <4> above constitute the initial settings.

<5> Set the DACEi bit of the DAM register to 1 (D/A conversion enable).
D/A conversion starts, and then, after the settling time elapses, the analog voltage set in step <4> is output to the ANOi pin.
<6> To perform subsequent D/A conversions, write to the DACSi register.

The previous D/A conversion result is held until the next D/A conversion is performed.
When the DACEi bit of the DAM register is set to 0 (D/A conversion operation stop), D/A conversion stops.

Caution 1. Even if 1, 0, and then 1 is set to the DACEi bit, the analog voltage set by the DACSi register is output to the ANOi pin when a settling time has elapsed after 1 is set for the last time.

Caution 2. If the DACSi register is rewritten during the settling time, D/A conversion is aborted and reconversion by using the rewritten values starts.

Remark i = 0, 1

16.4.2 Operation in Real-Time Output Mode

D/A conversion is performed on each channel using the event signals from the ELC as triggers. The setting method is described below.

<1> Set the DACEN bit of the PER1 register (peripheral enable register 1) to 1 to start the supply of the input clock to the D/A converter.
<2> Use the port mode control register (PMC2) to set the ports to analog pins.
<3> Set the DAMDi bit of the DAM register (D/A converter mode register) to 0 (normal mode).
<4> Set the analog voltage value to be output to the ANOi pin to the DACSi register (D/A conversion value setting register i).
<5> Set the DACEi bit of the DAM register to 1 (D/A conversion enable).
D/A conversion starts, and then, after the settling time elapses, the analog voltage set in step <3> is output to the ANOi pin.
<6> Use the port mode control register (PMC2) to set the trigger signal used for real-time output mode.
<7> Set the DAMDi bit of the DAM register to 1 (real-time output mode).
<8> Start the operation of the event source.

Steps <1> to <8> above constitute the initial settings.

<9> Upon generation of the trigger signals used for real-time output mode, D/A conversion starts and the analog voltage set in step <4> will be output to the ANOi pin after a settling time has elapsed.
Set the analog voltage value to be output to the ANOi pin, to the DACSi register before performing the next D/A conversion (trigger signal used for real-time output mode is generated).

Set the analog voltage value to be output to the ANOi pin, to the DACSi register before performing the next D/A conversion (trigger signal used for real-time output mode is generated).
When the DACEi bit of the DAM register is set to 0 (D/A conversion operation stop), D/A conversion stops.

Caution 1. Even if 1, 0, and then 1 is set to the DACEi bit, the analog voltage set by the DACSi register is output to the ANOi pin when a settling time has elapsed after 1 is set for the last time.

Caution 2. Set the interval between each generation of the trigger signal used for real-time output mode of the same channel to longer than the settling time. If a trigger signal used for real-time output mode is generated during the settling time, D/A conversion is aborted and reconversion starts.

Caution 3. Set the interval between each generation of the trigger signal used for real-time output mode of the same channel to longer than the three clocks of f_{CLK}. When a trigger is generated consecutively at intervals of three or fewer f_{CLK} clock cycles, D/A conversion is performed using only the first trigger.

16.4.3 Timing for Outputting D/A Conversion Value

Figure 16 - 5 shows the Timing for Outputting D/A Conversion Value.

Figure 16 - 5 Timing for Outputting D/A Conversion Value

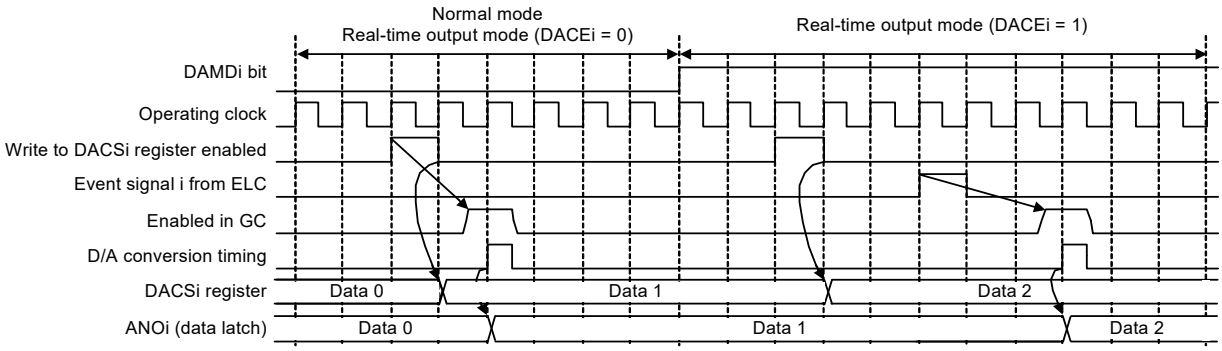

Remark i = 0, 1

- Normal mode and real-time output mode (when conversion operation is disabled)
  The value is written to the data latch after one cycle of the operating clock when the DACSi register is written.
- Real-time output mode (when conversion operation is enabled)
  The value is written to the data latch (output from the ANOi pin) after three cycles of the operating clock when the event signal from the ELC is accepted.

16.5 Cautions for D/A Converter

Observe the following cautions when using the D/A converter.

(1) The digital port I/O function, which is the alternate function of the ANO0 and ANO1 pins, does not operate if the ports are set to analog pins by using the port mode control register (PMC2).
When the P2 register is read while the ports are set to analog pins by using the PMC2 register, 0 is read in the input mode and the set value of the P2 register is read in the output mode. If the digital output mode is set, no output data is output to pins.

(2) The operation of the D/A converter continues in the HALT and STOP modes. To lower the power consumption, therefore, clear the DACEi bit to 0, and execute the HALT or STOP instruction after stopping the operation of the D/A converter.

Remark i = 0, 1

(3) To stop the real-time output mode (including when changing to normal mode), one of the following procedures must be used:

- Wait for at least three clocks after stopping the trigger output source and then set bits DACEi and DAMDi to 0.
- After setting bits DACEi and DAMDi, set the DACEN bit of the PER1 register to 0 (DAC stop).
When the DACEN bit is set to 0, all the registers in the DAC are cleared, so the settings of the SFRs are required to start the operation again.

(4) When D/A conversion operation is enabled, do not perform A/D conversions from the analog input pins multiplexed with the ANO0 and ANO1 pins.

(5) In real-time output mode, set the value of the DACSi register before a trigger signal used for real-time output mode is generated. Do not change the set value of the DACSi register while the trigger signal is output.

(6) Since the output impedance of the D/A converter is high, no current can be taken out from the ANO0 or ANO1 pin. If the input impedance of the load is low, insert a follower amplifier between the load and the ANO0 and ANO1 pins before use. In addition, the wiring length between the follower amplifier and the load must be as short as possible due to the high output impedance. If the wiring length is long, take measures such as placing a ground pattern around the wiring area.

(7) When entering STOP mode while real-time output mode is enabled, disable linking of ELC events before entering STOP mode.

CHAPTER 17 COMPARATOR (CMP)

RL78/G1F has two comparator channels (CMP).

17.1 Functions of Comparator

The comparator has the following functions.

- A pin selector switch is added to the analog input of CMP1.
  (Comparison including external pin/internal reference voltage and internal DAC reference voltage can be performed.)
- The motor position can be detected when the motor stops by comparison of U, V, and W in combination for sensorless motor control.
- Three-phase zero cross detection can be performed by switching one comparator.
- The comparison result of Comparator 0 and Comparator 1 can be output from the pins (VCOUT0, VCOUT1).

Table 17 - 1 CMP Function Overview

Item	Description
CMP	• 2 channels available (Comparator 0 and Comparator 1) • The reference voltage can be selected in the negative side: Analog pin input, Comparator 0 internal reference voltage, or internal reference voltage (1.45V) can be selected for the negative side of Comparator 0. • Analog pin inputs (4), Comparator 1 internal reference voltage, internal reference voltage (1.45V) can be selected for the negative side of Comparator 1. • Internal reference voltage can be set in the negative side (256 possible ways) • The positive side of Comparator 0 can be connected to the output of PGA. • 4 inputs from the pins can be selected for the positive side of Comparator 1. • High level output when positive side input voltage > negative side input voltage, low level output when positive side input voltage < negative side input voltage • The elimination width of the noise elimination digital filter can be selected. • Output inversion function • Comparison results can be output from the pins (VCOUT0, VCOUT1). • An interrupt request can be generated when an active edge is detected. • Motor initial position detection and high/low speed rotation control can be performed in combination with other functions. 6-phase PWM output of the timer can be set/reset to the Hi-Z state in case of overcurrent. • A timer window can be output in combination with TAU0.

17.2 Configuration of CMP

Figure 17 - 1 shows the block diagram of Comparator 0. Figure 17 - 2 shows the block diagram of Comparator 1.

Figure 17 - 1 Comparator 0 Block Diagram

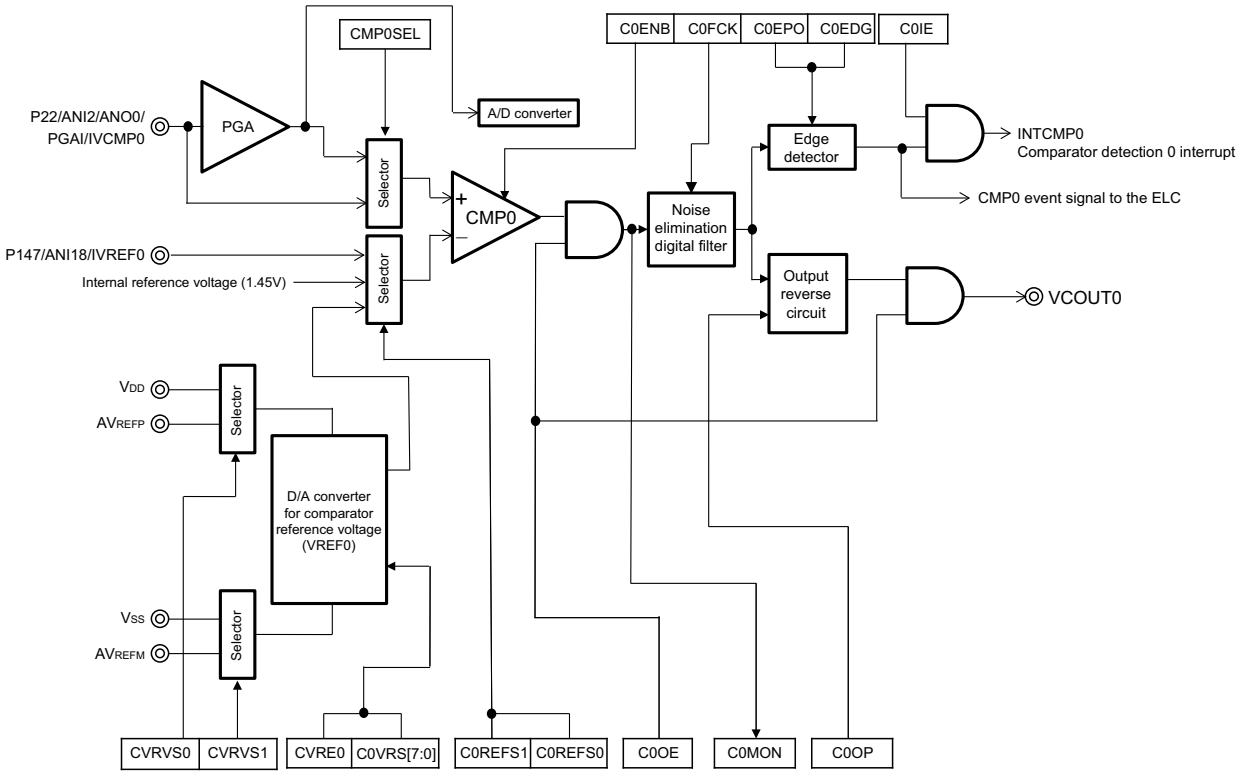

Figure 17 - 2 Comparator 1 Block Diagram

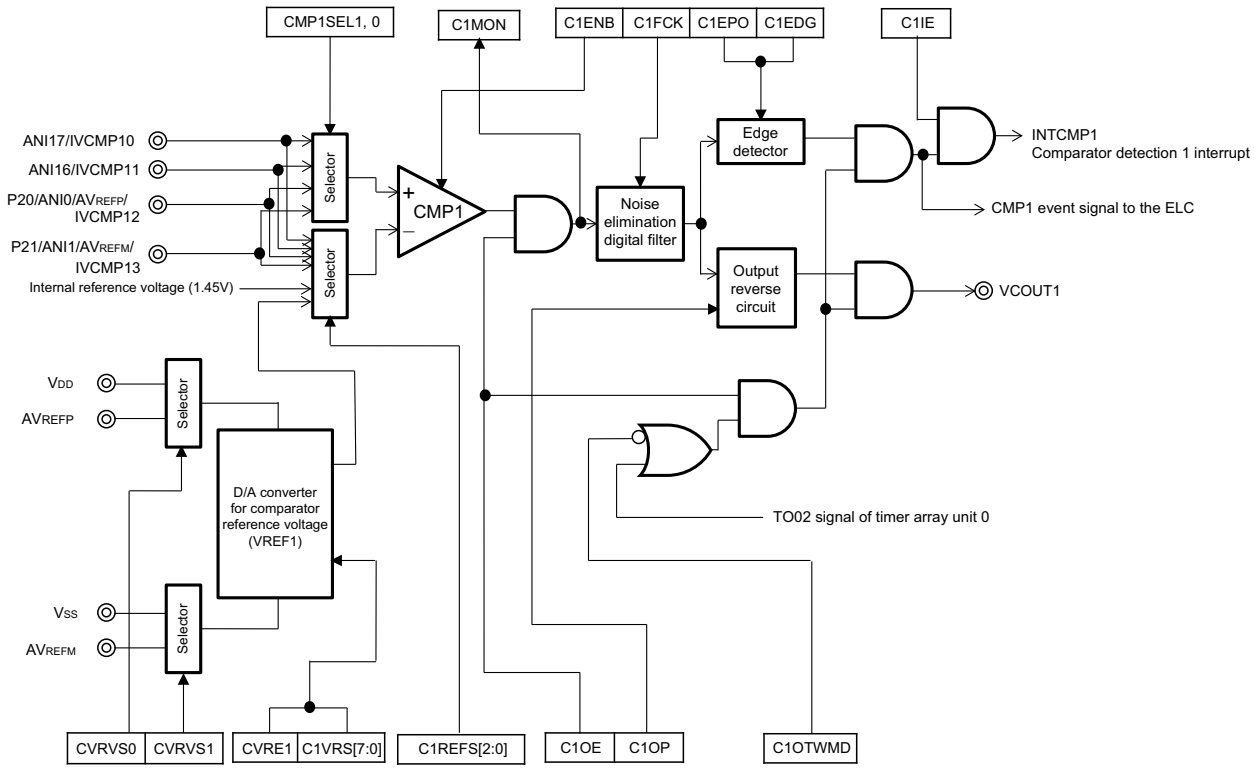

17.3 Registers Controlling Comparator

Table 17 - 2 lists the Registers Controlling Comparator.

Table 17 - 2 Registers Controlling Comparator

Register Name	Symbol
Peripheral enable register 1	PER1
Comparator mode setting register	COMPMDR
Comparator filter control register	COMPFIR
Comparator output control register	COMPOCR
Comparator internal reference voltage control register	CVRCTL
Comparator internal reference voltage select register 0	C0RVM
Comparator internal reference voltage select register 1	C1RVM
Comparator 0 input select control register	CMPSEL0
Comparator 1 input select control register	CMPSEL1
Port mode control registers 0, 2, 14	PMC0, PMC2, PMC14
Port mode registers 0, 1, 2, 3, 7, 12, 14	PM0, PM1, PM2, PM3, PM7, PM12, PM14
Port registers 0, 1, 2, 3, 7, 12, 14	P0, P1, P2, P3, P7, P12, P14
Peripheral I/O redirection registers 2, 3	PIOR2, PIOR3

17.3.1 Peripheral enable register 1 (PER1)

The PER1 register is used to enable or disable use of each peripheral hardware macro. Clock supply to a hardware macro that is not used is stopped in order to reduce the power consumption and noise.

When PGA and Comparator is used, be sure to set bit 5 (PGACMPEN) of this register to 1.

The PER1 register can be set by a 1-bit or 8-bit memory manipulation instruction.

Reset signal generation clears this register to 00H.

Figure 17 - 3 Format of Peripheral Enable Register 1 (PER1)

Address: F007AH After reset: 00H R/W

Symbol	7	6	5	4	3	2	1	0
PER1	DACEN	TRGEN	PGACMPEN	TRD0EN	DTCEN	PWMOPEN	TRXEN	TRJ0EN

PGACMPEN	Control of PGA and Comparator input clock
0	Stops input clock supply. • SFR used by the Comparator cannot be written. • The Comparator is in the reset status.
1	Supplies input clock. • SFR used by the Comparator can be read/written.

Caution When setting PGA and Comparator, be sure to set the PGACMPEN bit to 1 first.
If PGACMPEN = 0, writing to a control register of PGA and comparator is ignored, and all read values are default values (except for port mode registers 0, 1, 2, 3, 7, 12, 14 (PM0, PM1, PM2, PM3, PM7, PM12, PM14), port registers 0, 1, 2, 3, 7, 12, 14 (P0, P1, P2, P3, P7, P12, P14), and peripheral I/O redirection registers 2, 3 (PIOR2, PIOR3)).

17.3.2 Comparator mode setting register (COMPMDR)

The COMPMDR register sets the comparator operation enable/stop and monitors comparator output.

Setting the CiENB bit of the COMPMDR register to 0 is disabled when output is enabled (CiOE bit of the COMPOCR register = 1).

Setting CiENB = 1 (operation enabled) is disabled in the following cases (i = 0, 1).

- Internal reference voltage is selected for CMP negative side input, and internal reference voltage operation is disabled (CVREi bit of the CVRCTL register = 0)
- Comparator 0 input = PGA output is selected, and PGA operation is disabled (CMPSEL0 of the CVRCTL register = 1, and PGAEN bit of the PGAEN register = 0)

The COMPMDR register can be set by a 1-bit or 8-bit memory manipulation instruction.

Reset signal generation clears this register to 00H.

Figure 17 - 4 Format of Comparator Mode Setting Register (COMPMDR)

Address: F0340H After reset: 00H R/W

Symbol	7	6	5	4	3	2	1	0
COMPMDR	C1MON	0	0	C1ENB	C0MON	0	0	C0ENB

C1MON	Comparator 1 monitor flag[Notes 1, 2]
0	IVCMP1 < comparator 1 reference voltage or comparator 1 stopped
1	IVCMP1 > comparator 1 reference voltage

C1ENB	Comparator 1 operation enable
0	Comparator 1 operation disabled
1	Comparator 1 operation enabled

C0MON	Comparator 0 monitor flag[Notes 1, 2]
0	IVCMP0 < comparator 0 reference voltage or comparator 0 stopped
1	IVCMP0 > comparator 0 reference voltage

C0ENB	Comparator 0 operation enable
0	Comparator 0 operation disabled
1	Comparator 0 operation enabled

Note 1. The initial value is 0 immediately after a reset is released. However, the value is undefined when C0ENB is set to 0 and C1ENB is set to 0 after operation of the comparator is enabled once.

Note 2. The value written to this bit is ignored.

17.3.3 Comparator filter control register (COMPFIR)

The COMPFIR register controls the digital noise filter.

The COMPFIR can be set by an 8-bit memory manipulation instruction.

Reset signal generation clears this register to 00H.

Figure 17 - 5 Format of Comparator Filter Control Register (COMPFIR)

Address: F0341H After reset: 00H R/W

Symbol	7	6	5	4	3	2	1	0
COMPFIR	C1EDG	C1EPO	C1FCK1	C1FCK0	C0EDG	C0EPO	C0FCK1	C0FCK0

C1EDG	Comparator 1 edge detection selection[Note 1]
0	Interrupt request by comparator 1 one-edge detection
1	Interrupt request by comparator 1 both-edge detection

C1EPO	Comparator 1 edge polarity switching[Note 1]
0	Interrupt request at comparator 1 rising edge
1	Interrupt request at comparator 1 falling edge

C1FCK1	C1FCK0	Comparator 1 filter selection[Note 1]
0	0	No comparator 1 filter
0	1	Comparator 1 filter enabled, sampling at f_{CLK}
1	0	Comparator 1 filter enabled, sampling at $f_{CLK}/8$
1	1	Comparator 1 filter enabled, sampling at $f_{CLK}/32$

C0EDG	Comparator 0 edge detection selection[Note 2]
0	Interrupt request by comparator 0 one-edge detection
1	Interrupt request by comparator 0 both-edge detection

C0EPO	Comparator 0 edge polarity switching[Note 2]
0	Interrupt request at comparator 0 rising edge
1	Interrupt request at comparator 0 falling edge

C0FCK1	C0FCK0	Comparator 0 filter selection[Note 2]
0	0	No comparator 0 filter
0	1	Comparator 0 filter enabled, sampling at f_{CLK}
1	0	Comparator 0 filter enabled, sampling at $f_{CLK}/8$
1	1	Comparator 0 filter enabled, sampling at $f_{CLK}/32$

Note 1. If bits C1FCK1, C1FCK0, C1EPO, and C1EDG are changed, a comparator 1 interrupt and an event signal to the ELC may be generated. Change these bits only after setting the ELSELR21 register for the ELC to 0 (not linked to comparator 1 output). In addition, clear bit 0 (CMPIF1) in interrupt request flag register 2H (IF2H) to 0.

If bits C1FCK1 and C1FCK0 are changed from 00B (no comparator 1 filter) to a value other than 00B (comparator 1 filter enabled), allow the time for sampling four times to elapse until the filter output is updated, and then use the comparator 1 interrupt request or the event signal to the ELC.

Note 2. If bits C0FCK1, C0FCK0, C0EPO, and C0EDG are changed, a comparator 0 interrupt and an event signal to the ELC may be generated. Change these bits only after setting the ELSELR20 register for the ELC to 0 (not linked to comparator 0 output). In addition, clear bit 7 (CMPIF0) in interrupt request flag register 2L (IF2L) to 0.
If bits C0FCK1 and C0FCK0 are changed from 00B (no comparator 0 filter) to a value other than 00B (comparator 0 filter enabled), allow the time for sampling four times to elapse until the filter output is updated, and then use the comparator 0 interrupt request or the event signal to the ELC.

17.3.4 Comparator output control register (COMPOCR)

The COMPOCR register controls comparator output polarity, output enable/disable, and interrupt output enable/disable.

Setting CiOE = 1 (output enabled) is disabled in the following cases (i = 0, 1).

- Comparator operation is disabled (CiENB bit of the COMPMDR register = 0)
- Internal reference voltage is selected for CMP negative side input, and internal reference voltage operation is disabled (CVREi bit of the CVRCTL register = 0)
- Comparator 0 input = PGA output is selected, and PGA operation is disabled (CMPSEL0 of the CVRCTL register = 1, and PGAEN bit of the PGAEN register = 0)

The COMPOCR register can be set by a 1-bit or 8-bit memory manipulation instruction.

Reset signal generation sets this register to 00H.

Figure 17 - 6 Format of Comparator Output Control Register (COMPOCR)

Address: F0342H After reset: 00H R/W

Symbol	7	6	5	4	3	2	1	0
COMPOCR	C1OTWMD	C1OP	C1OE	C1IE	0	C0OP	C0OE	C0IE

C1OTWMD	TIMER WINDOW output mode control bit of comparator 1[Note 1]
0	Comparator 1 normal output mode (controlled by C1OE bit)
1	Comparator 1 TIMER WINDOW output mode (controlled by both TO02 and C1OE)

C1OP	VCOUT1 output polarity selection
0	Comparator 1 output is output to VCOUT1
1	Inverted comparator 1 output is output to VCOUT1

C1OE	VCOUT1 pin output enable[Notes 2, 3]
0	Comparator 1 VCOUT1 pin output disabled
1	Comparator 1 VCOUT1 pin output enabled

C1IE	Comparator 1 interrupt request enable[Note 4]
0	Comparator 1 interrupt request disabled
1	Comparator 1 interrupt request enabled

C0OP	VCOUT0 output polarity selection[Note 5]
0	Comparator 0 output is output to VCOUT0
1	Inverted comparator 0 output is output to VCOUT0

C0OE	VCOUT0 pin output enable[Notes 5, 6, 7]
0	Comparator 0 VCOUT0 pin output disabled
1	Comparator 0 VCOUT0 pin output enabled[Notes 4, 8]

C0IE	Comparator 0 interrupt request enable[Note 8]
0	Comparator 0 interrupt request disabled
1	Comparator 0 interrupt request enabled

Note 1. When Comparator 1 uses the TIMER WINDOW output mode, be sure to set bit 7 (C1EDG) of the COMPFIR register to 0. The C1OE bit and C1OTWMD bit cannot be set simultaneously. Set C1OE to 1 after setting the C1OTWMD bit.

Note 2. When the C1OE bit is changed, a comparator 1 interrupt request and ELC event may be generated. Change this bit after setting the ELSELR21 register of ELC to 0 (not linked to comparator 1 output). Also, initialize the flag bit CMPIF1 of the interrupt control register (no interrupt request) after the change.

Note 3. When the Comparator 1 result is output to a pin, be sure to set bit 2 (PIOR32) of the PIOR3 register to 1.

Note 4. When the C0OE bit is changed, a comparator 0 interrupt request and ELC event may be generated. Change this bit after setting the ELSELR20 register of ELC to 0 (not linked to comparator 0 output). Also, initialize the flag bit CMPIF0 of the interrupt control register (no interrupt request) after the change.

Note 5. It controls the C0OE bit and C0OP bit so that they input the result of Comparator 0 to the PWM option unit to allow forced cutoff of PWM output.When rewriting the SPDMD bit, be sure to set the CiENB bit (i = 0 or 1) in the COMPMDR register to 0 in advance.

Note 6. If C1IE is changed from 0 (interrupt request disabled) to 1 (interrupt request enabled), since bit 0 (CMPIF1) in interrupt control register 2H (IF2H) may set to 1 (interrupt requested), initialize bit 0 (CMPIF1) in interrupt control register 2H (IF2H) (no interrupt request) before using an interrupt.

Note 7. When the Comparator 0 result is output to a pin, be sure to set bit 1 (PIOR31) of the PIOR3 register to 1.

Note 8. If C0IE is changed from 0 (interrupt request disabled) to 1 (interrupt request enabled), since bit 7 (CMPIF0) in interrupt control register 2L (IF2L) may set to 1 (interrupt requested), initialize bit 7 (CMPIF0) in interrupt control register 2L (IF2L) (no interrupt request) before using an interrupt.

17.3.5 Comparator internal reference voltage control register (CVRCTL)

This register sets the comparator internal reference voltage operation enable/stop.

The CVRCTL register can be set by a 1-bit or 8-bit memory manipulation instruction.

Reset signal generation clears this register to 00H.

Caution Rewrite the CVRVSi bit of the CVRCTL register while internal reference voltage operation is stopped (CVREi = 0) (i = 0, 1).

Figure 17 - 7 Format of Comparator Internal Reference Voltage Control Register (CVRCTL)

Address: F0343H After reset: 00H R/W

Symbol	7	6	5	4	3	2	1	0
CVRCTL	0	0	CVRE1	CVRVS1	0	0	CVRE0	CVRVS0

CVRE1	Control bit for internal reference voltage 1
0	Internal reference voltage 1 operation stopped
1	Internal reference voltage 1 operation enabled

CVRVS1	Ground selection bit for internal reference voltage
0	V_{SS} selected as ground for internal reference voltage
1	AV_{REFM} selected as ground for internal reference voltage[Note 1]

CVRE0	Control bit for internal reference voltage 0
0	Internal reference voltage 0 operation stopped
1	Internal reference voltage 0 operation enabled

CVRVS0	Power supply selection bit for internal reference voltage
0	V_{DD} selected as power supply for internal reference voltage
1	AV_{REFP} selected as power supply for internal reference voltage[Note 2]

Note 1. P21 is used by AV_{REFM} and IVCMP13. When the P21 pin is used as CMP1 input signal, setting CVRVS1 to 1 is prohibited.

Note 2. P20 is used by AV_{REFP} and IVCMP12. When the P20 pin is used as CMP1 input signal, setting CVRVS0 to 1 is prohibited.

17.3.6 Comparator internal reference voltage select register i (CiRVM) (i = 0, 1)

This register is used to set the internal reference voltage level of comparator.

Rewrite the CiRVM register while internal reference voltage operation is stopped (CVREi = 0).

The CiRVM register can be set by an 8-bit memory manipulation instruction.

Reset signal generation clears this register to 00H.

Figure 17 - 8 Format of Comparator Internal Reference Voltage Select Register i (CiRVM)

Address: F0344H (C0RVM) After reset: 00H R/W
F0345H (C1RVM)

Symbol	7	6	5	4	3	2	1	0
CiRVM	CiVRS7	CiVRS6	CiVRS5	CiVRS4	CiVRS3	CiVRS2	CiVRS1	CiVRS0

CiVRS7	CiVRS6	CiVRS5	CiVRS4	CiVRS3	CiVRS2	CiVRS1	CiVRS0	Comparator internal reference voltage level setting
0	0	0	0	0	0	0	0	$((AV_{REFP}$ or $V_{DD})/256) \times 0$
0	0	0	0	0	0	0	1	$((AV_{REFP}$ or $V_{DD})/256) \times 1$
0	0	0	0	0	0	1	0	$((AV_{REFP}$ or $V_{DD})/256) \times 2$
0	0	0	0	0	0	1	1	$((AV_{REFP}$ or $V_{DD})/256) \times 3$
:								:
1	1	1	1	1	1	0	0	$((AV_{REFP}$ or $V_{DD})/256) \times 252$
1	1	1	1	1	1	0	1	$((AV_{REFP}$ or $V_{DD})/256) \times 253$
1	1	1	1	1	1	1	0	$((AV_{REFP}$ or $V_{DD})/256) \times 254$
1	1	1	1	1	1	1	1	$((AV_{REFP}$ or $V_{DD})/256) \times 255$

17.3.7 Comparator 0 input signal selection control register (CMPSEL0)

The CMPSEL0 register selects the input signals on the positive and negative sides of Comparator 0.

Rewrite the CMPSEL0 register while comparator operation is stopped (C0ENB = 0).

The CMPSEL0 register can be set by a 1-bit or 8-bit memory manipulation instruction.

Reset signal generation clears this register to 00H.

Figure 17 - 9 Comparator 0 Input Signal Selection Control Register (CMPSEL0)

Address: F034AH After reset: 00H R/W

Symbol	7	6	5	4	3	2	1	0
CMPSEL0	CMP0SEL	0	0	0	0	0	C0REFS1	C0REFS0

CMP0SEL	Selection of the input signal on the positive side of Comparator 0
0	AIN5V0 (IVCMP0 pin) selected
1	Signal from PGA

C0REFS1	C0REFS0	Selection of the input signal on the negative side of Comparator 0
0	0	Internal reference voltage VREF0 selected
0	1	Internal reference voltage (1.45 V) selected
1	0	External pin (IVREF0) selected
1	1	Setting prohibited

17.3.8 Comparator 1 input signal selection control register (CMPSEL1)

The CMPSEL1 register selects the input signals on the positive and negative sides of Comparator 1.

The CMPSEL1 register can be set by a 1-bit or 8-bit memory manipulation instruction.

Reset signal generation clears this register to 00H.

Figure 17 - 10 Comparator 1 Input Signal Selection Control Register (CMPSEL1)

Address: F034BH After reset: 00H R/W

Symbol	7	6	5	4	3	2	1	0
CMPSEL1	CMP1SEL1	CMP1SEL0	0	0	0	C1REFS2	C1REFS1	C1REFS0

CMP1SEL1	CMP1SEL0	Selection of the input signal on the positive side of Comparator 1
0	0	External pin (IVCMP10) selected
0	1	External pin (IVCMP11) selected
1	0	External pin (IVCMP12) selected
1	1	External pin (IVCMP13) selected

C1REFS2	C1REFS1	C1REFS0	Selection of the input signal on the negative side of Comparator 1
0	0	0	Internal reference voltage VREF1 selected
0	0	1	Internal reference voltage (1.45 V) selected
0	1	0	External pin (IVCMP10) selected
0	1	1	External pin (IVCMP11) selected
1	0	0	External pin (IVCMP12) selected
1	0	1	External pin (IVCMP13) selected
1	1	0	Setting prohibited
1	1	1	Setting prohibited

Caution Set the switch interval to 3 μs or more to eliminate the effect of through-current between the two input signals when the CMP1 analog input is switched.

17.3.9 Registers controlling port functions of analog input pins

When using the IVCMP0, IVCMP10 to IVCMP13, and IVREF0 pins for analog input of the comparator, set the port mode register (PMxx) bit and port mode control register (PMCxx) bit to 1.

When using the VCOUT0 and VCOUT1 functions, set the registers (port mode register (PMxx), port register (Pxx), and peripheral I/O redirection register (PIOR2, PIOR3) that control the port functions shared with the target channels. For details, see **4.3.1 Port mode registers (PMxx)**, **4.3.2 Port registers (Pxx)**, **4.3.9 Peripheral I/O redirection register 2 (PIOR2)**, and **4.3.10 Peripheral I/O redirection register 3 (PIOR3)**.

17.4 Operation

Comparator 0 and comparator 1 operate independently. Their setting methods and operations are the same.
For CMP and PGA, simultaneous operation can be performed only when Comparator 0 and PGA are combined.
Table 17 - 3 shows the setting procedure for single operation and simultaneous operation of comparators.

Table 17 - 3 Procedure for Setting Comparator Associated Registers

Step	Register	Bit	Setting Value
1	PGACTL	PGAVG0, PGAVG1	Select GAIN.Note 3
2	PGACTL	PVRVS	0 (V_{SS} pin selected)Note 3
3	PGACTL	PGAEN	1 (operation enabled)Note 3
4	Wait for PGA stabilization time (at least 10 μs).		
5	COMPSELi	CMP0SEL/CMP1SELi	Select comparator i positive side input.
6	COMPSELi	CiREFS	Select comparator i negative side input.
7	CiRVM	CiVRSn	Set the internal reference voltage value.
8	CVRCTL	CVRVSi	Select power supply and GND of internal reference voltage.
9	CVRCTL	CVREi	1 (internal reference voltage i operation enabled)
10	Wait for reference voltage stabilization time (at least 20 μs).		
11	Select functions of IVCMP0, IVCMP1x, IVREF0 pin (input), and PGAI (input).Note 3		
12	COMPMDR	CiENB	1 (operation enabled)
13	Wait for comparator stabilization time (at least 3 μs).		
14	COMPFIR	CiFCK	Select whether the digital filter is used or not and the sampling clock.
		CiEPO, CiEDG	Select the edge detection condition for an interrupt request (rising edge/falling edge/both edges).
15	COMPOCR	CiOP, CiOE	Set the comparator i output (select polarity, output enabled).
		CiIE	Set the interrupt request output enabled or disabled.
		C1OTWMD	Set Comparator 1 TIMER WINDOW output enabled or disabled.
16	PR2L, PR2HNote 1	CMPPR0i, CMPPR1i	When using an interrupt: Select the interrupt priority level.
17	MK2L, MK2HNote 1	CMPMKi	When using an interrupt: Select the interrupt masking.
18	IF2L, IF2HNote 1	CMPIFi	When using an interrupt: 0 (no interrupt requested: initialization)Note 2

Note 1. xx2L is the interrupt control registers for comparator 0. xx2H is the interrupt control registers for comparator 1. (xx: PR, MK, IF)

Note 2. After the setting of the comparator, an unnecessary interrupt may occur until operation becomes stable, so initialize the interrupt flag.

Note 3. Setting is required for simultaneous operation of Comparator 0 and PGA.

Remark i = 0, 1, n = 0 to 7, x = 0 to 3

Figure 17 - 11 shows comparator i (i = 0 or 1) operation examples. The CiMON bit in the COMPMDR register is set to 1 when the analog input voltage is higher than the reference input voltage, and the CiMON bit is set to 0 when the analog input voltage is lower than the reference input voltage.
When using the comparator i interrupt, set CiIE in the COMPOCR register to 1 (interrupt request enabled). If the comparison result changes at this time, a comparator i interrupt request is generated. For details on interrupt requests, refer to **17.4.1 Comparator i digital filter (i = 0 or 1)**.

Figure 17 - 11 Comparator i (i = 0 or 1) Operation Example in Standard Mode

• Operation example in standard mode

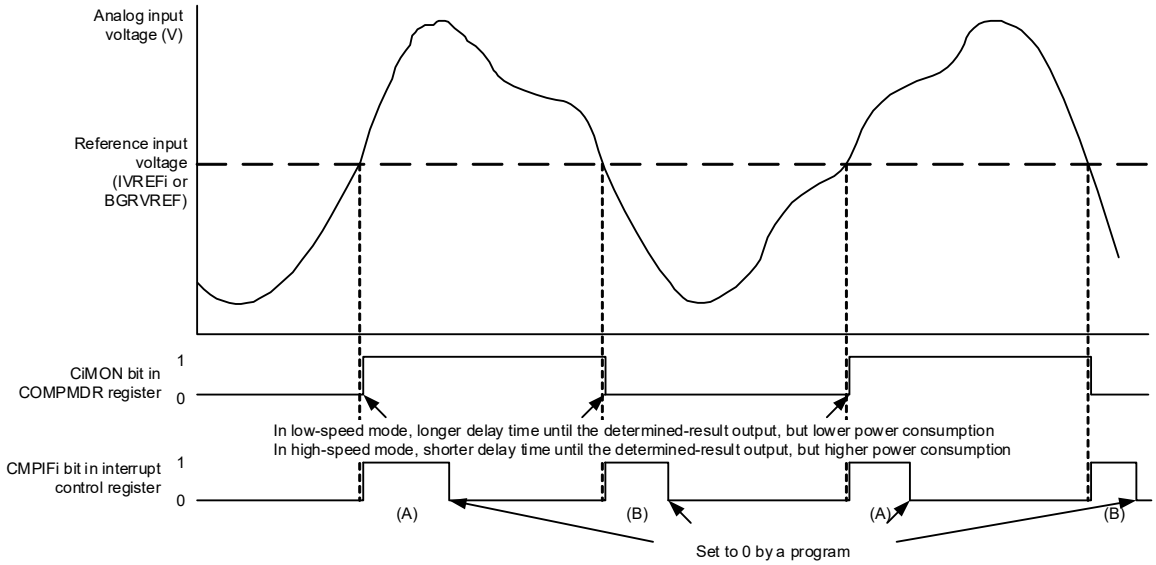

Caution **The above diagram applies when CiFCK1 and CiFCK0 in the COMPFIR register = 00B (no filter) and CiEDG = 1 (both edges). When CiEDG = 0 and CiEPO = 0 (rising edge), CMPIFi changes as shown by (A) only. When CiEDG = 0 and CiEPO = 1 (falling edge), CMPIFi changes as shown by (B) only.**

17.4.1 Comparator i digital filter (i = 0 or 1)

Comparator i contains a digital filter. The sampling clock can be selected by bits CiFCK1 - CiFCK0 in the COMPFIR register. The comparator i output signal is sampled every sampling clock, and when the level matches three times, that value is determined as the digital filter output at the next sampling clock.

Figure 17 - 12 shows the Configuration of Comparator i Digital Filter and Edge Detection. Figure 17 - 13 shows the Comparator i (i = 0 or 1) Digital Filter and Interrupt Operation Example.

Figure 17 - 12 Configuration of Comparator i Digital Filter and Edge Detection

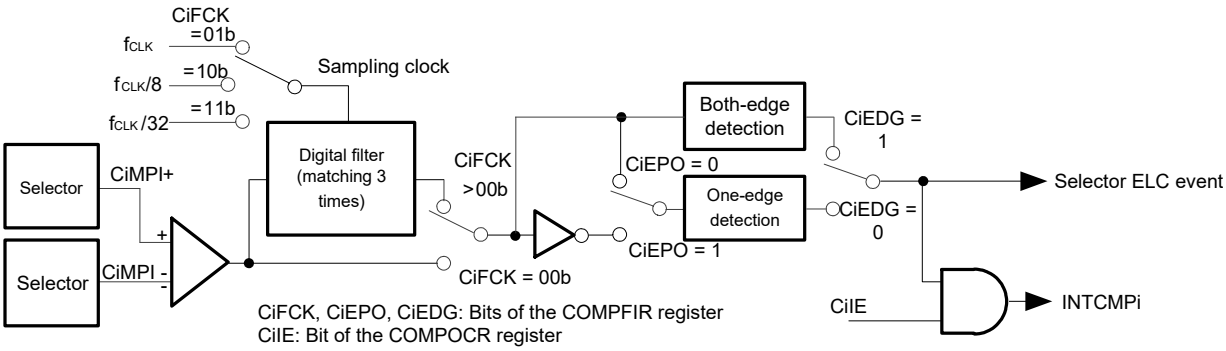

Figure 17 - 13 Comparator i (i = 0 or 1) Digital Filter and Interrupt Operation Example

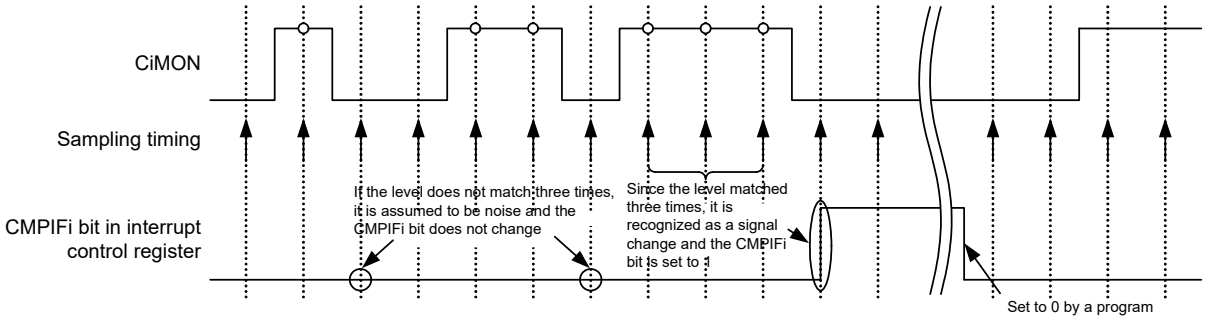

Caution **The above operation example applies when C1OTWMD bit in the COMPOCR register is 0 and bits CiFCK1 and CiFCK0 in the COMPFIR register is 01B, 10B, or 11B (digital filter enabled).**

17.4.2 Comparator i (i = 0 or 1) interrupts

The comparator generates interrupt requests from two sources, comparator 0 and comparator 1. The comparator i interrupt each uses a priority level specification flag, an interrupt mask flag, an interrupt request flag, and a single vector.

When using the comparator i interrupt, set the CiIE bit in the COMPOCR register to 1 (interrupt request output enabled). The condition for interrupt request generation can be set by the COMPFIR register. The comparator outputs can also be passed through the digital filter. Three different sampling clocks can be selected for the digital filter.

For details on the register setting and interrupt request generation, refer to **17.3.3 Comparator filter control register (COMPFIR)** and **17.3.4 Comparator output control register (COMPOCR)**.

Caution The setting above allows an interrupt of CMP1 to be generated when C1OTWMD = 0. When C1OTWMD = 1, an interrupt occurs normally when the output signal TO02 from the timer array unit (TAU) is at high level. The interrupt signal is fixed at 0 when it is at low level.

17.4.3 Event signal output to event link controller (ELC)

An event signal to the ELC is generated by detecting the edge for the digital filter output set by the COMPFIR register, which is the same as the condition for interrupt request generation. However, unlike interrupt requests, the event signal to the ELC are always output regardless of the CiIE bit in the COMPOCR register. Set registers ELSELR20 and ELSELR21 for the ELC to select the event output destination and to stop linking events.

Figure 17 - 14 Digital Filter and Interrupt Request/Event Signal Output to the ELC Operation

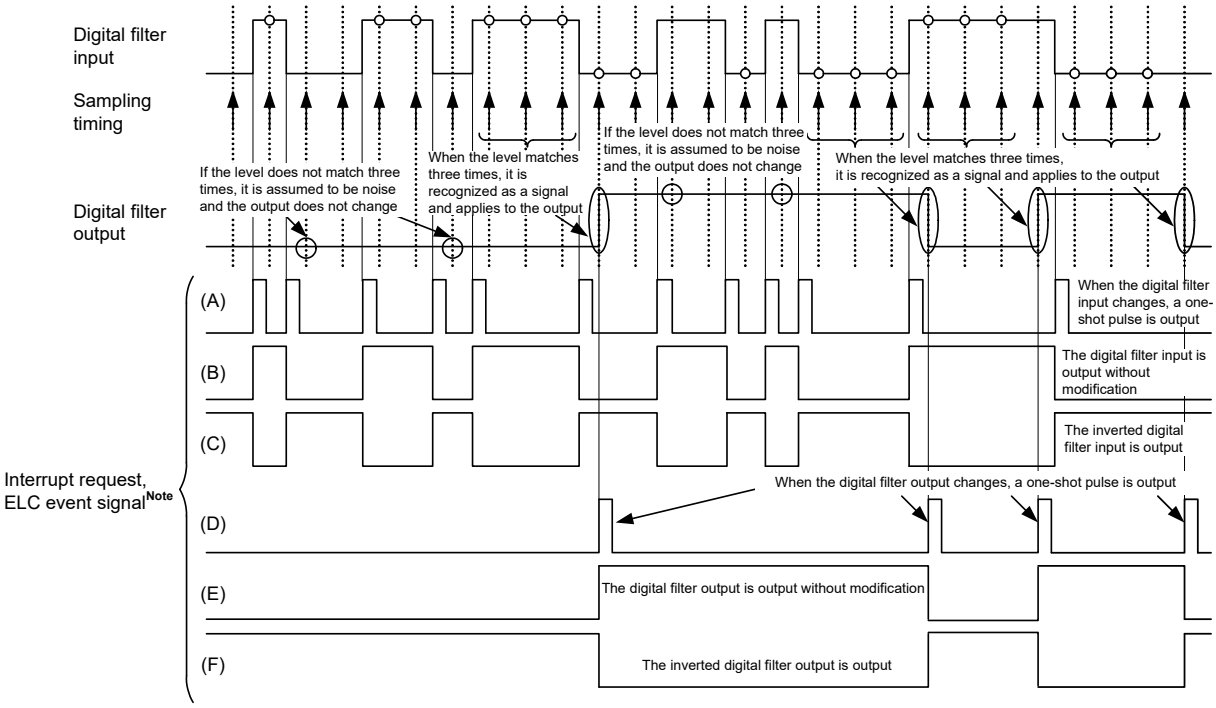

Note When the CiIE bit (i = 0, 1) is 1, the same waveform is generated for an interrupt request and an ELC event signal. When the CiIE bit (i = 0, 1) is 0, the value is fixed at 0 for an interrupt request only.

The waveforms of (A), (B), and (C) are shown for an operation example when the CiFCK bits (i = 0, 1) in the COMPFIR register are 00B (no digital filter). The waveforms (D), (E), and (F) are shown for an operation example when the CiFCK bits (i = 0, 1) in the COMPFIR register are 01B, 10B, or 11B (digital filter enabled).
(A) and (D) apply when the CiEDG bit is set to 1 (both edges), (B) and (E) when the CiEDG bit is 0 and the CiEPO bit is 0 (rising edge), and (C) and (F) when the CiEDG bit is 0 and the CiEPO bit is 1 (falling edge).

Caution The setting above allows an ELC event of CMP1 to be generated when C1OTWMD = 0. When C1OTWMD = 1, an ELC event occurs normally when the output signal TO02 from the timer array unit (TAU) is at high level. The ELC event output is fixed at 0 when it is at low level.

17.4.4 Comparator i output (i = 0 or 1)

The comparison result from the comparator can be output to external pins. Bits CiOP and CiOE in the COMPOCR register can be used to set the output polarity (non-inverted output or inverted output) and output enabled or disabled. For the correspondence between the register setting and the comparator output, refer to **17.3.4 Comparator output control register (COMPOCR)**.

To output the comparator comparison result to the VCOUTi output pin, use the following procedure to set the ports. Note that the ports are set to input after reset.

<1> Set the mode for the comparator (Steps 2 to 5 as listed in Table 17 - 3 Procedure for Setting Comparator Associated Registers).
<2> Set the VCOUTi output for the comparator (set the COMPOCR register to select the polarity and enable the output).
<3> Set the corresponding port mode control register bit for the VCOUTi output pin to 0.
<4> Set the corresponding port register bit for the VCOUTi output pin to 0.
<5> Set the corresponding port mode register for the VCOUTi output pin to output (start outputting from the pin).

17.4.5 Stopping or supplying comparator clock

To stop the comparator clock by setting peripheral enable register 1 (PER1), use the following procedure:

<1> Set the CiENB bit in the COMPMDR register to 0 (stop the comparator).
<2> Set the CMPIFi bit in registers IF2L and IF2H to 0 (clear any unnecessary interrupt before stopping the comparator).
<3> Set the PGACMPEN bit in the PER1 register to 0.

When the clock is stopped by setting PER1, all the internal registers in the comparator are initialized. To use the comparator again, follow the procedure in Table 17 - 3 to set the registers.

Caution 1. The temperature sensor output cannot be A/D converted by the A/D converter while the comparator i reference voltage select bit (CiVRF) in the comparator mode setting register (COMPMDR) is 1 (comparator i reference voltage is internal reference voltage (1.45 V)).

Caution 2. When DTC activation is enabled under either of the following conditions, a DTC transfer is started and an interrupt is generated after completion of the transfer. Therefore, enable DTC activation after confirming the comparator monitor flag (CiMON) as necessary. (i = 0, 1)
The comparator is set to an interrupt request on one-edge detection (CiEDG = 0), an interrupt request at the rising edge for the comparator (CiEPO = 1), and IVCMP > IVREF (or internal reference voltage: 1.45 V)
The comparator is set to an interrupt request on one-edge detection (CiEDG = 0), an interrupt request at the falling edge for the comparator (CiEPO = 1), and IVCMP < IVREF (or internal reference voltage: 1.45 V)

CHAPTER 18 PROGRAMMABLE GAIN AMPLIFIER (PGA)

A circuit of programmable gain amplifier is incorporated in RL78/G1F.
The pins that can be selected as GND of feedback resistance of the programmable gain amplifier vary depending on the product. To use PGAGND as the GND for the feedback resistance of the programmable gain amplifier, apply the same potential to it as that on Vss.

Item	24-pin	32-pin, 36-pin, 48-pin, 64-pin
Analog input channels	PGAI	PGAI
GND of feedback resistance of the programmable gain amplifier	V_{SS}	V_{SS}/PGAGND

18.1 Functions of Programmable Gain Amplifier

The programmable gain amplifier is provided with the following functions.

- One among four amplification factors can be selected.
- The output signal of a programmable gain amplifier can be set as the analog input of A/D converter and the input signal on the positive side of comparator 0 (CMP0).

18.2 Configuration of Programmable Gain Amplifier

The programmable gain amplifier includes the following hardware.

Figure 18 - 1 Block Diagram of Programmable Gain Amplifier

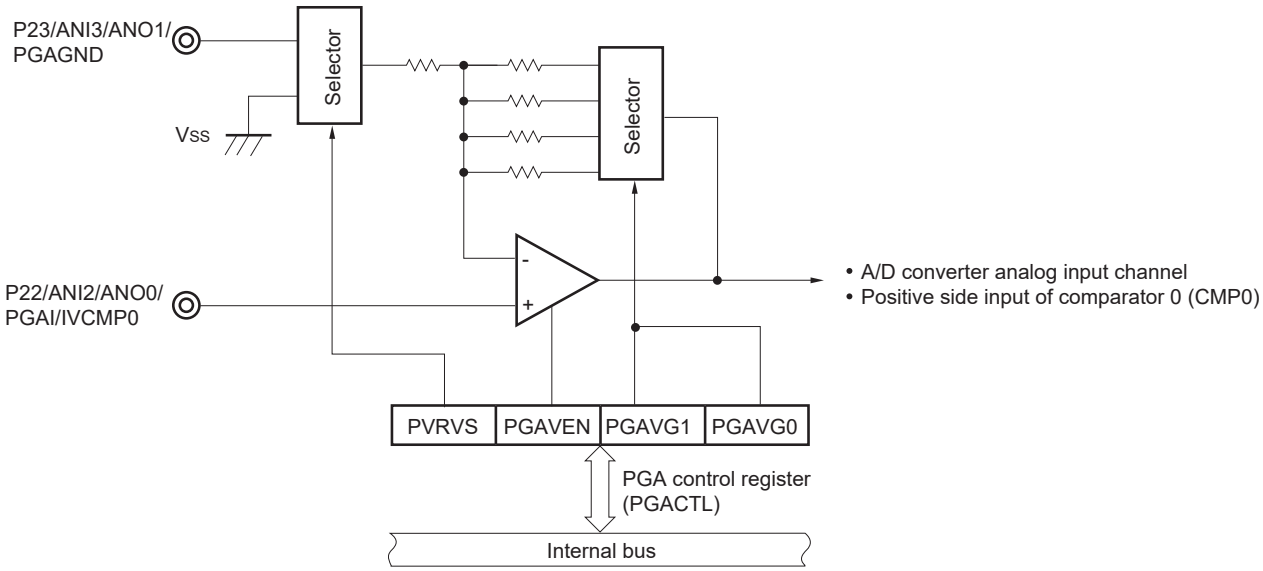

18.3 Registers Controlling Programmable Gain Amplifier

Table 18 - 1 lists the registers controlling the programmable gain amplifier.

Table 18 - 1 Registers Controlling Programmable Gain Amplifier

Register Name	Symbol
Peripheral enable register 1	PER1
PGA control register	PGACTL
Port mode control register 2	PMC2
Port mode register 2	PM2

18.3.1 Peripheral enable register 1 (PER1)

This register is used to enable or disable supplying the clock to the peripheral hardware. Clock supply to a hardware macro that is not used is stopped in order to reduce the power consumption and noise.
When the PGA and comparator are used, be sure to set bit 5 (PGACMPEN) of this register to 1.
The PER1 register can be set by a 1-bit or 8-bit memory manipulation instruction.
Reset signal generation clears this register to 00H.

Figure 18 - 2 Format of Peripheral Enable Register 1 (PER1)

Address: F007AH After reset: 00H R/W

Symbol	7	6	5	4	3	2	1	0
PER1	DACEN	TRGEN	PGACMPEN Note	TRD0EN	DTCEN	PWMOPEN	TRXEN	TRJ0EN

PGACMPEN Note	Comparator/programmable gain amplifier input clock control
0	Stops input clock supply. • SFR used by the comparator or programmable gain amplifier cannot be written. • The comparator or programmable gain amplifier is in the reset status.
1	Supplies input clock. • SFR used by the comparator or programmable gain amplifier can be read/written.

Caution **When setting comparator or programmable gain amplifier, be sure to set the PGACMPEN bit to 1 first. If PGACMPEN = 0, writing to a control register of comparator or programmable gain amplifier is ignored, and all read values are default values (except for port mode register 2 (PM2) and port register 2 (P2)).**

Note If bits C1FCK1, C1FCK0, C1EPO, and C1EDG are changed, a comparator 1 interrupt request and an event signal to the ELC may be generated. Change these bits only after setting the ELSELR21 register for the ELC to 0 (not linked to comparator 1 output). In addition, clear bit 0 (CMPIF1) in interrupt request flag register 2H (IF2H) to 0.
If bits C1FCK1 and C1FCK0 are changed from 00B (no comparator 1 filter) to a value other than 00B (comparator 1 filter enabled), allow the time for sampling four times to elapse until the filter output is updated, and then use the comparator 1 interrupt request or the event signal to the ELC.

18.3.2 PGA control register (PGACTL)

The PGACLT register sets operation enable/disable and amplification factor of the programmable gain amplifier.
The PGACTL register can be set by a 1-bit or 8-bit memory manipulation instruction.
Reset signal generation clears this register to 00H.

Figure 18 - 3 Format of PGA Control Register (PGACTL)

Address: F0347H After reset: 00H R/W

Symbol	7	6	5	4	3	2	1	0
PGACTL	PGAEN	-	-	-	PVRVS[Note]	-	PGAVG1	PGAVG0

PGAEN	Programmable gain amplifier operation control
0	Stops operation of programmable gain amplifier.
1	Enables operation of programmable gain amplifier.

PVRVS[Note]	GND selection of feedback resistance of the programmable gain amplifier
0	Selects V_{SS}.
1	Selects PGAGND.

PGAVG1	PGAVG0	Programmable gain amplifier amplification factor selection
0	0	×4
0	1	×8
1	0	×16
1	1	×32

Note For 24-pin products, set this bit to 0.

Caution 1. Rewrite the bits of the PGACTL register other than PGAEN when PGA operation is stopped (PGAEN = 0).

Caution 2. For the programmable gain amplifier, an operation stabilization wait time (10 μs) is required after setting PGAEN = 1.

18.3.3 Port mode control register 2 (PMC2)

This register is used to set the digital I/O/analog input in 1-bit units.

To use the programmable gain amplifier, set bit 2 (PMC22) to 1. To select PGAGND as GND of the feedback resistance of the programmable gain amplifier, set bit 3 (PMC23) to 1.

Port mode control register 2 (PMC2) can be set by a 1-bit or 8-bit memory manipulation instruction.

Reset signal generation sets these registers to FFH.

Figure 18 - 4 Format of Port Mode Control Register 2 (PMC2)

Address: F0062H After reset: 00H R/W

Symbol	7	6	5	4	3	2	1	0
PMC2	PMC27	PMC26	PMC25	PMC24	PMC23	PMC22	PMC21	PMC20

PMC2n	P2n pin digital I/O/analog input selection
0	Digital I/O (alternate function other than analog input)
1	Analog input

Remark n: Channel number (n = 0 to 7)

18.3.4 Port mode register 2 (PM2)

This register is used to set the port I/O in 1-bit units.

To use the programmable gain amplifier, set bit 2 (PM22) to 1. To select PGAGND as GND of the feedback resistance of the programmable gain amplifier, set bit 3 (PM23) to 1.

Port mode register 2 (PM2) can be set by a 1-bit or 8-bit memory manipulation instruction.

Reset signal generation sets these registers to FFH.

Figure 18 - 5 Format of Port Mode Register 2 (PM2)

Address: FFF22H After reset: FFH R/W

Symbol	7	6	5	4	3	2	1	0
PM2	PM27	PM26	PM25	PM24	PM23	PM22	PM21	PM20

PM2n	P2n pin I/O mode selection
0	Output mode (output buffer on)
1	Input mode (output buffer off)

Remark n: Channel number (n = 0 to 7)

18.4 Operation of Programmable Gain Amplifier

The analog voltage input from the PGAI pin is amplified within the microcontroller. The gain can be selected from four types (×4, ×8, ×16, and ×32).

The amplified voltage can be used as an analog input of the A/D converter and the input signal on the positive side of the comparator 0 (CMP0).

The procedure for starting operation of the programmable gain amplifier is described below.

(1) Set input clock supply for the programmable gain amplifier in the PGACMPEN bit of the PER1 register.
(2) Use the PMC2 register to set the pins (PMC22, PMC23) to be used in the programmable gain amplifier as analog inputs.
(3) Use the PM2 register to set the pins (PM22, PM23) to be used in the programmable gain amplifier to input mode.
(4) Use the PGAVG0 and PGAVG1 bits to select the gain (×4, ×8, ×16, and ×32).
(5) To use the programmable gain amplifier output as the input signal on the positive side of Comparator 0, set the signal from PGA to the CMP0SEL bit of the CMPSEL0 register.
(6) Set (1) the PGAEN bit and enable operation of the programmable gain amplifier.

18.4.1 Setting procedure of programmable gain amplifier

Figure 18 - 6 Operation Setting Flow Chart of Programmable Gain Amplifier (PGA)

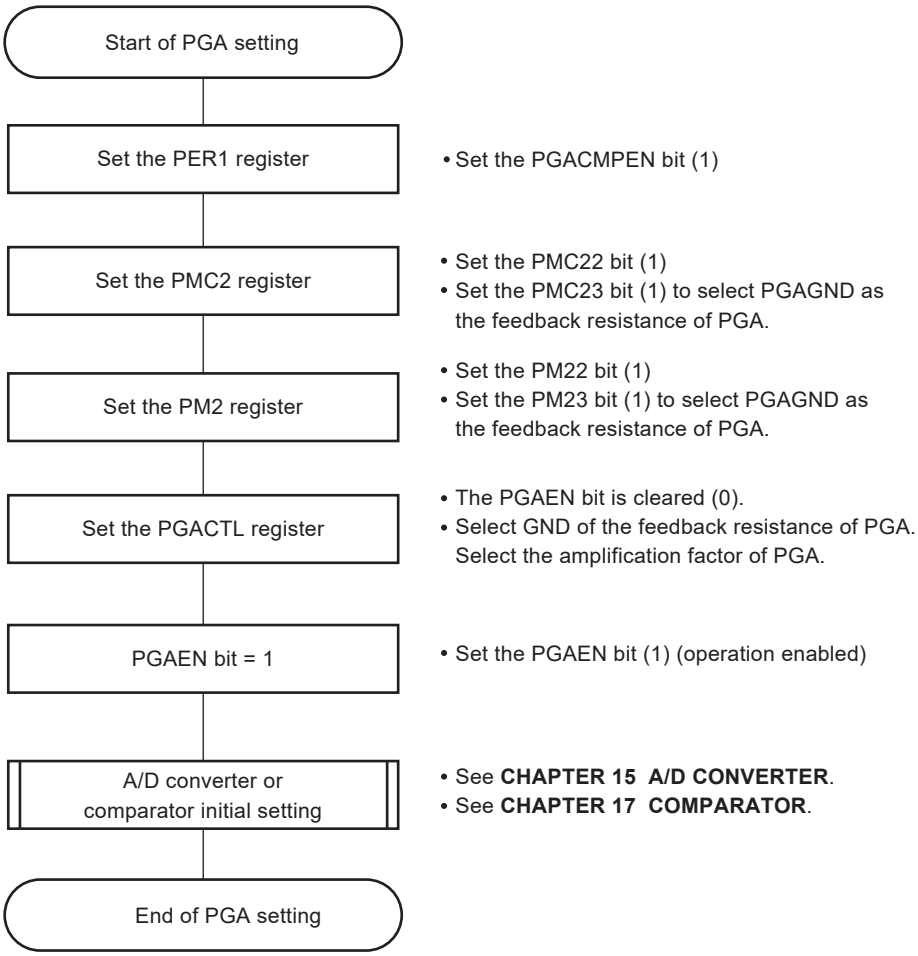

Caution After setting the PGAEN bit (1), start A/D conversion after 10 μs elapse as PGA operation stabilization wait time.

18.4.2 Setting procedure of programmable gain amplifier

Figure 18 - 7 Operation Stopping Flow Chart of Programmable Gain Amplifier (PGA)

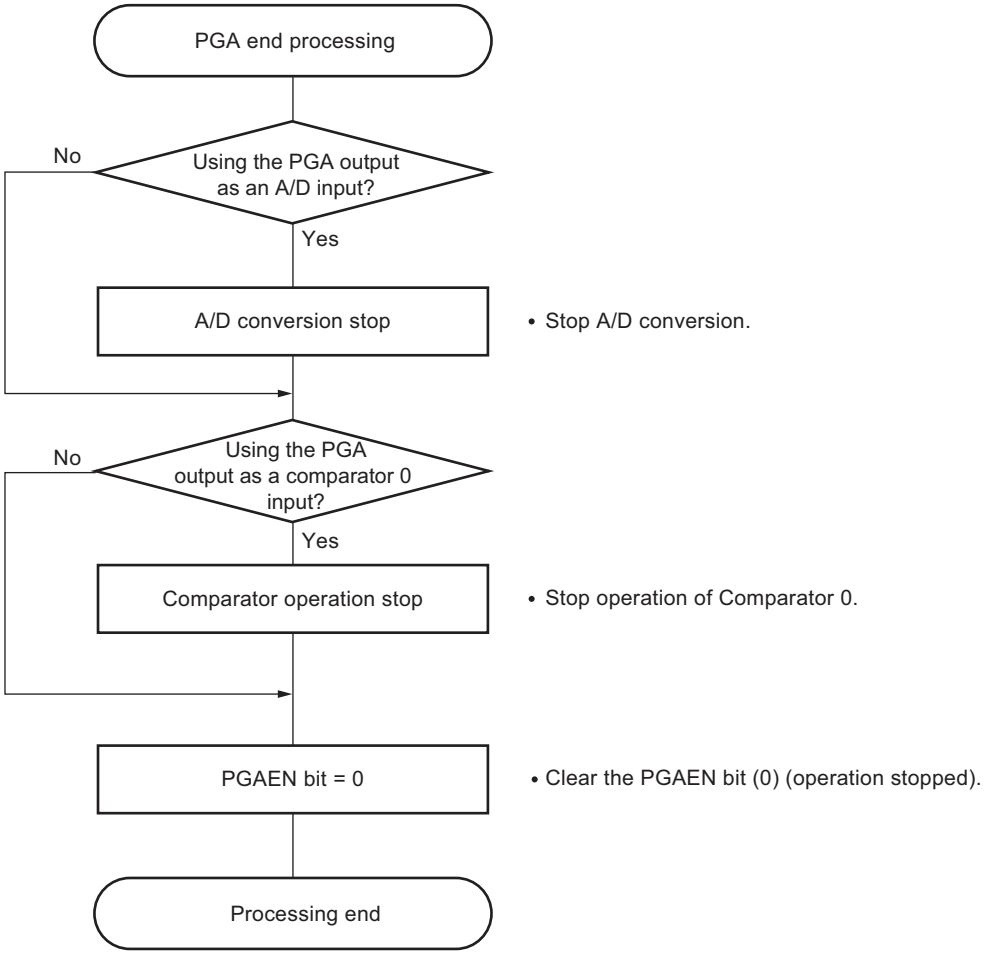

Caution 1. When restarting PGA and A/D converter or comparator, start the function after 10 μs elapse as PGA operation stabilization wait time after setting the PGAEN bit (1).

Caution 2. The A/D conversion pins and comparators to which PGA output is not connected can be used even when PGA operation is stopped.

CHAPTER 19 SERIAL ARRAY UNIT

This product has two serial array units. Serial array unit 0 has four serial channels. Serial array unit 1 has two serial channels. All channels can achieve UART, and only channel 0 can achieve Simplified SPI (CSI) Note and simplified I2C. Function assignment of each channel supported by the RL78/G1F is as shown below.

Note Although the CSI function is generally called SPI, it is also called CSI in this product, so it is referred to as such in this manual.

• 24, 32, 36-pin products

Unit	Channel	Used as Simplified SPI (CSI)	Used as UART	Used as Simplified I2C
0	0	CSI00 (supporting slave select input function)	UART0 (supporting LIN-bus)	IIC00
	1	—		—
	2	—	UART1	—
	3	CSI11		IIC11
1	0	CSI20	UART2 (supporting IrDA)	IIC20
	1	—		—

• 48-pin products

Unit	Channel	Used as Simplified SPI (CSI)	Used as UART	Used as Simplified I2C
0	0	CSI00 (supporting slave select input function)	UART0 (supporting LIN-bus)	IIC00
	1	CSI01		IIC01
	2	—	UART1	—
	3	CSI11		IIC11
1	0	CSI20	UART2 (supporting IrDA)	IIC20
	1	CSI21		IIC21

• 64-pin products

Unit	Channel	Used as Simplified SPI (CSI)	Used as UART	Used as Simplified I2C
0	0	CSI00 (supporting slave select input function)	UART0 (supporting LIN-bus)	IIC00
	1	CSI01		IIC01
	2	CSI10	UART1	IIC10
	3	CSI11		IIC11
1	0	CSI20	UART2 (supporting IrDA)	IIC20
	1	CSI21		IIC21

When “UART0” is used for channels 0 and 1 of the unit 0, CSI00 and CSI01 cannot be used, but CSI10, UART1, or IIC10 can be used for channels 2 and 3.

Caution Most of the following descriptions in this chapter use the units and channels of the 64-pin products as an example.

19.1 Functions of Serial Array Unit

Each serial interface supported by the RL78/G1F has the following features.

19.1.1 Simplified SPI (CSI00, CSI01, CSI10, CSI11, CSI20, CSI21)

Data is transmitted or received in synchronization with the serial clock (SCK) output from the master channel.
3-wire serial communication is clocked communication performed by using three communication lines: one for the serial clock (SCK), one for transmitting serial data (SO), one for receiving serial data (SI).
For details about the settings, see **19.5 Operation of Simplified SPI (CSI00, CSI01, CSI10, CSI11, CSI20, CSI21) Communication**.

[Data transmission/reception]
• Data length of 7 or 8 bits
• Phase control of transmit/receive data
• MSB/LSB first selectable
[Clock control]
• Master/slave selection
• Phase control of I/O clock
• Setting of transfer period by prescaler and internal counter of each channel
• Maximum transfer rate[Note]
During master communication: Max. $f_{CLK}/2$ (CSI00 only)
Max. $f_{CLK}/4$
During slave communication: Max. $f_{MCK}/6$
[Interrupt function]
• Transfer end interrupt/buffer empty interrupt
[Error detection flag]
• Overrun error

Simplified SPIs (CSIs) of following channels supports the SNOOZE mode. When SCK input is detected while in the STOP mode, the SNOOZE mode makes data reception that does not require the CPU possible. CSI00 can only be specified.

Note Use the clocks within a range satisfying the SCK cycle time (t_{KCY}) characteristics. For details, see **CHAPTER 37** or **CHAPTER 38 ELECTRICAL SPECIFICATIONS**.

Table 19 - 1 Simplified SPI (CSI) Function List

Function	24, 32, 36-pin	48-pin	64-pin
CSI00 (with SSI) (supporting SNOOZE)	√	√	√
CSI01	—	√	√
CSI10	—	—	√
CSI11	√	√	√
CSI20	√	√	√
CSI21	—	√	√

19.1.2 UART (UART0 to UART2)

This is a start-stop synchronization function using two lines: serial data transmission (TxD) and serial data reception (RxD) lines. By using these two communication lines, each data frame, which consist of a start bit, data, parity bit, and stop bit, is transferred asynchronously (using the internal baud rate) between the microcontroller and the other communication party. Full-duplex UART communication can be performed by using a channel dedicated to transmission (even-numbered channel) and a channel dedicated to reception (odd-numbered channel). The LIN-bus can be implemented by using timer array unit with an external interrupt (INTP0).

For details about the settings, see **19.7 Operation of UART (UART0 to UART2) Communication**.

[Data transmission/reception]

- Data length of 7, 8, or 9 bits Note
- Select the MSB/LSB first
- Level setting of transmit/receive data and select of reverse
- Parity bit appending and parity check functions
- Stop bit appending

[Interrupt function]

- Transfer end interrupt/buffer empty interrupt
- Error interrupt in case of framing error, parity error, or overrun error

[Error detection flag]

- Framing error, parity error, or overrun error

In addition, UARTs of following channels supports the SNOOZE mode. When RxD input is detected while in the STOP mode, the SNOOZE mode makes data reception that does not require the CPU possible. UART0 can only be specified when FRQSEL4 in the option byte (000C2H) = 0 in the SNOOZE mode.

The LIN-bus is accepted in UART0 (0 and 1 channels of unit 0).

[LIN-bus functions]

- Wakeup signal detection
- Break field (BF) detection
- Sync field measurement, baud rate calculation

} Using the external interrupt (INTP0) and timer array unit

Note UART0 can only be specified for the 9-bit data length.

Table 19 - 2 Simplified SPI (CSI) Function List

Function	24, 32, 36-pin	48-pin	64-pin
UART0 (supporting LIN) (supporting SNOOZE)	√	√	√
UART1	√	√	√
UART2	√	√	√

19.1.3 Simplified I²C (IIC00, IIC01, IIC10, IIC11, IIC20, IIC21)

This is a clocked communication function to communicate with two or more devices by using two lines: serial clock (SCL) and serial data (SDA). This simplified I²C is designed for single communication with a device such as EEPROM, flash memory, or A/D converter, and therefore, it functions only as a master.
Make sure by using software, as well as operating the control registers, that the AC specifications of the start and stop conditions are observed.
For details about the settings, see **19.9 Operation of Simplified I²C (IIC00, IIC01, IIC10, IIC11, IIC20, IIC21) Communication**.

[Data transmission/reception]
- Master transmission, master reception (only master function with a single master)
- ACK output function[Note] and ACK detection function
- Data length of 8 bits (When an address is transmitted, the address is specified by the higher 7 bits, and the least significant bit is used for R/W control.)
- Manual generation of start condition and stop condition

[Interrupt function]
- Transfer end interrupt

[Error detection flag]
- ACK error or overrun error

* [Functions not supported by simplified I²C]
- Slave transmission, slave reception
- Arbitration loss detection function
- Wait detection functions

Note When receiving the last data, ACK will not be output if 0 is written to the SOEmn bit (serial output enable register m (SOEm)) and serial communication data output is stopped. See the processing flow in **19.9.3 (2)** for details.

Remark To use an I²C bus of full function, see **CHAPTER 20 SERIAL INTERFACE IICA**.

Table 19 - 3 Simplified SPI (CSI) Function List

Function	24, 32, 36-pin	48-pin	64-pin
IIC00	√	√	√
IIC01	—	√	√
IIC10	—	—	√
IIC11	√	√	√
IIC20	√	√	√
IIC21	—	√	√

19.2 Configuration of Serial Array Unit

The serial array unit includes the following hardware.

Table 19 - 4 Configuration of Serial Array Unit

Item	Configuration
Shift register	8 bits or 9 bits[Note 1]
Buffer register	Lower 8 bits or 9 bits of serial data register mn (SDRmn)[Notes 1, 2]
Serial clock I/O	SCK00, SCK01, SCK10, SCK11, SCK20, SCK21 pins (for simplified SPI), SCL00, SCL01, SCL10, SCL11, SCL20, SCL21 pins (for simplified I^2C)
Serial data input	SI00, SI01, SI10, SI11, SI20, SI21 pins (for simplified SPI), RxD0 pin (for UART supporting LIN-bus), RxD1, RxD2 pins (for UART)
Serial data output	SO00, SO01, SO10, SO11, SO20, SO21 pins (for simplified SPI), TxD0 pin (for UART supporting LIN-bus), TxD1, TxD2 pins (for UART)
Serial data I/O	SDA00, SDA01, SDA10, SDA11, SDA20, SDA21 pins (for simplified I^2C)
Slave select input	$\overline{\text{SSI00}}$ pin (for slave select input function)
Control registers	<Registers of unit setting block> • Peripheral enable register 0 (PER0) • Serial clock select register m (SPSm) • Serial channel enable status register m (SEm) • Serial channel start register m (SSm) • Serial channel stop register m (STm) • Serial output enable register m (SOEm) • Serial output register m (SOm) • Serial output level register m (SOLm) • Serial standby control register 0 (SSC0) • Input switch control register (ISC) • Noise filter enable register 0 (NFEN0)
	<Registers of each channel> • Serial data register mn (SDRmn) • Serial mode register mn (SMRmn) • Serial communication operation setting register mn (SCRmn) • Serial status register mn (SSRmn) • Serial flag clear trigger register mn (SIRmn)
	• Port input mode registers 0, 1, 3, 5, 7 (PIM0, PIM1, PIM3, PIM5, PIM7) • Port output mode registers 0, 1, 3, 5, 7 (POM0, POM1, POM3, POM5, POM7) • Port mode registers 0, 1, 3, 5 to 7 (PM0, PM1, PM3, PM5 to PM7) • Port registers 0, 1, 3, 5 to 7 (P0, P1, P3, P5 to P7)

(**Notes** and **Remark** are listed on the next page.)

Note 1. The number of bits used as the shift register and buffer register differs depending on the unit and channel.
- 30 to 64 -pin products and mn = 00, 01: lower 9 bits
- Other than above: lower 8 bits

Note 2. The lower 8 bits of serial data register mn (SDRmn) can be read or written as the following SFR, depending on the communication mode.
- CSIp communication ..... SIOp (CSIp data register)
- UARTq reception ..... RXDq (UARTq receive data register)
- UARTq transmission ..... TXDq (UARTq transmit data register)
- IICr communication ..... SIOr (IICr data register)

Remark m: Unit number (m = 0, 1), n: Channel number (n = 0 to 3), p: CSI number (p = 00, 01, 10, 11, 20, 21), q: UART number (q = 0 to 2), r: IIC number (r = 00, 01, 10, 11, 20, 21)

Figure 19 - 1 shows the Block Diagram of Serial Array Unit 0.

Figure 19 - 1 Block Diagram of Serial Array Unit 0

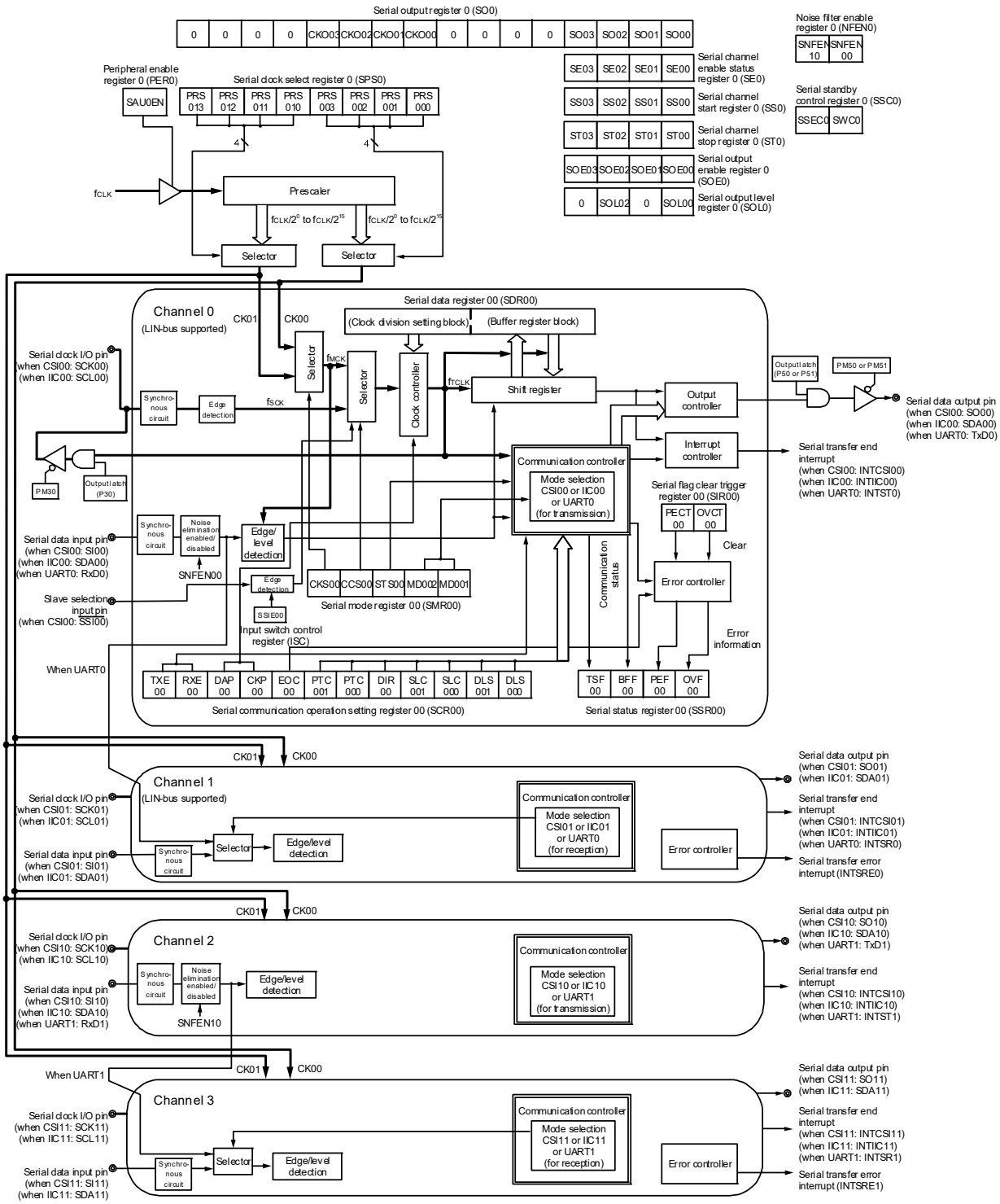

Figure 19 - 2 shows the Block Diagram of Serial Array Unit 1.

Figure 19 - 2 Block Diagram of Serial Array Unit 1

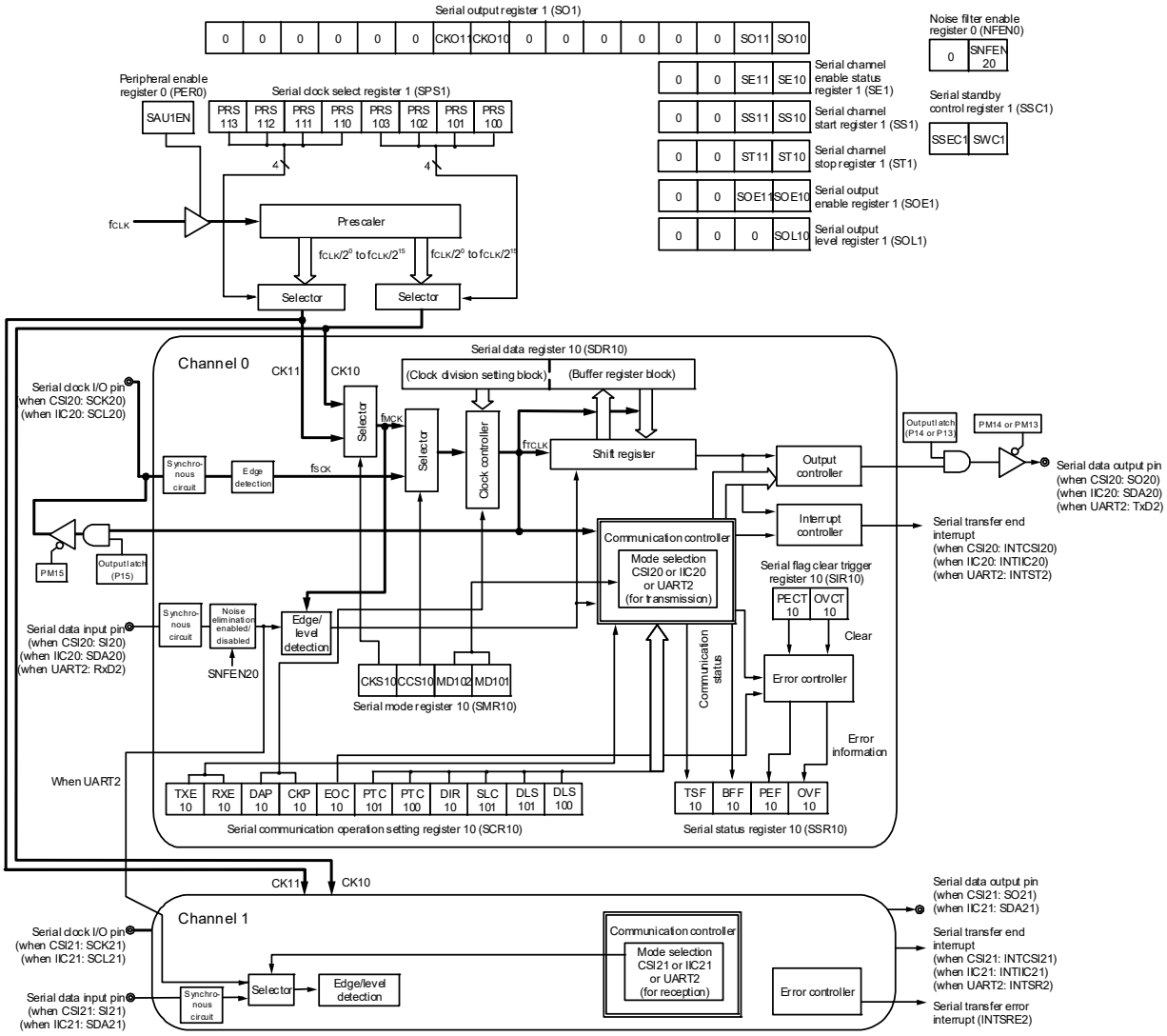

19.2.1 Shift register

This is a 9-bit register that converts parallel data into serial data or vice versa.

In case of the UART communication of nine bits of data, nine bits (bits 0 to 8) are used Note Note.

During reception, it converts data input to the serial pin into parallel data.

When data is transmitted, the value set to this register is output as serial data from the serial output pin.

The shift register cannot be directly manipulated by program.

To read or write the shift register, use the lower 8/9 bits of serial data register mn (SDRmn).

	8	7	6	5	4	3	2	1	0
Shift register									

19.2.2 Lower 8/9 bits of the serial data register mn (SDRmn)

The SDRmn register is the transmit/receive data register (16 bits) of channel n. Bits 8 to 0 (lower 9 bits)Note or bits 7 to 0 (lower 8 bits) function as a transmit/receive buffer register, and bits 15 to 9 are used as a register that sets the division ratio of the operation clock (f_{MCK}).

When data is received, parallel data converted by the shift register is stored in the lower 8/9 bits. When data is to be transmitted, set transmit data to be transferred to the shift register to the lower 8/9 bits.

The data stored in the lower 8/9 bits of this register is as follows, depending on the setting of bits 0 and 1 (DLSmn0, DLSmn1) of serial communication operation setting register mn (SCRmn), regardless of the output sequence of the data.

- 7-bit data length (stored in bits 0 to 6 of SDRmn register)
- 8-bit data length (stored in bits 0 to 7 of SDRmn register)
- 9-bit data length (stored in bits 0 to 8 of SDRmn register)Note

The SDRmn register can be read or written in 16-bit units.

The lower 8/9 bits of the SDRmn register can be read or writtenNote as the following SFR, depending on the communication mode.

- CSIp communication..... SIOp (CSIp data register)
- UARTq reception ..... RXDq (UARTq receive data register)
- UARTq transmission..... TXDq (UARTq transmit data register)
- IICr communication..... SIOr (IICr data register)

Reset signal generation clears the SDRmn register to 0000H.

Note UART0 can only be specified for the 9-bit data length.
When operation is stopped (SEmn = 0), do not rewrite SDRmn[7:0] by an 8-bit memory manipulation instruction (SDRmn[15:9] are all cleared to 0).

Remark 1. After data is received, “0” is stored in bits 0 to 8 in bit portions that exceed the data length.

Remark 2. m: Unit number (m = 0, 1), n: Channel number (n = 0 to 3), p: CSI number (p = 00, 01, 10, 11, 20, 21), q: UART number (q = 0 to 2), r: IIC number (r = 00, 01, 10, 11, 20, 21)

Figure 19 - 3 Format of Serial data register mn (SDRmn) (mn = 00, 01, 10, 11)

Address: FFF10H, FFF11H (SDR00), FFF12H, FFF13H (SDR01) After reset: 0000H R/W
FFF48H, FFF49H (SDR10), FFF4AH, FFF4BH (SDR11)

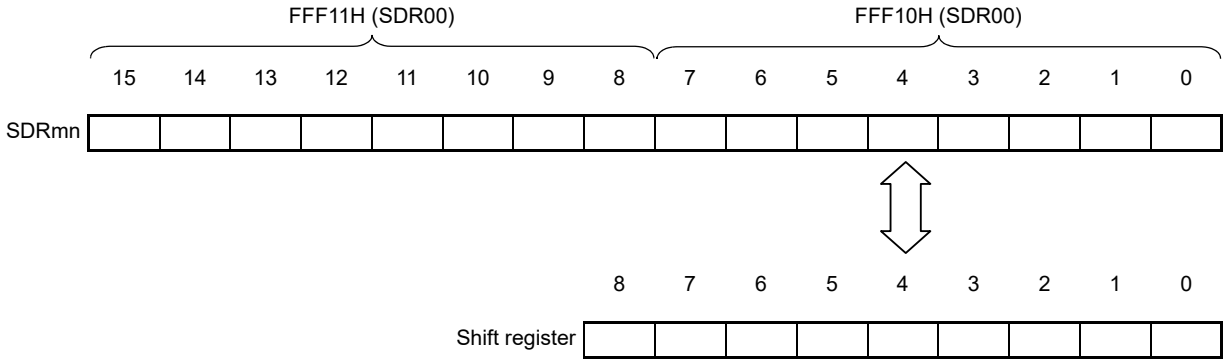

Remark For the function of the higher 7 bits of the SDRmn register, see **19.3 Registers Controlling Serial Array Unit**.

Figure 19 - 4 Format of Serial data register mn (SDRmn) (mn = 02, 03)

Address: FFF44H, FFF45H (SDR02), FFF46H, FFF47H (SDR03) After reset: 0000H R/W

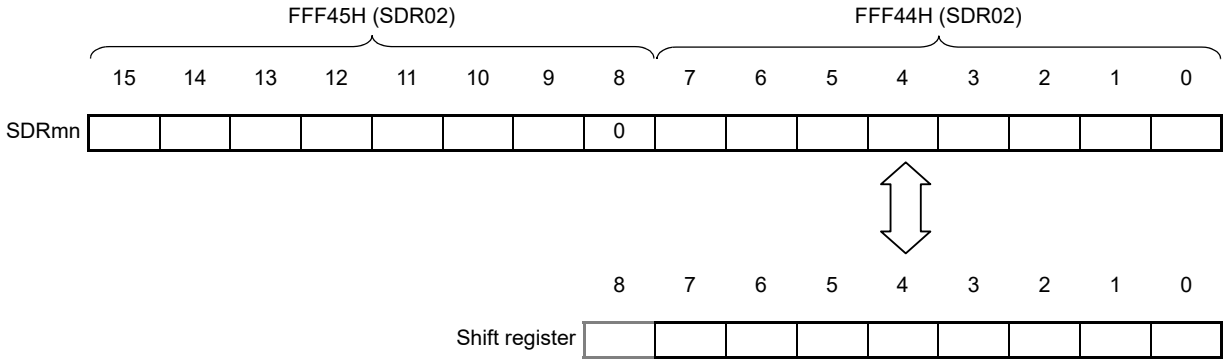

Caution **Be sure to clear bit 8 to "0".**

Remark For the function of the higher 7 bits of the SDRmn register, see **19.3 Registers Controlling Serial Array Unit**.

19.3 Registers Controlling Serial Array Unit

Serial array unit is controlled by the following registers.

- Peripheral enable register 0 (PER0)
- Serial clock select register m (SPSm)
- Serial mode register mn (SMRmn)
- Serial communication operation setting register mn (SCRmn)
- Serial data register mn (SDRmn)
- Serial flag clear trigger register mn (SIRmn)
- Serial status register mn (SSRmn)
- Serial channel start register m (SSm)
- Serial channel stop register m (STm)
- Serial channel enable status register m (SEm)
- Serial output enable register m (SOEm)
- Serial output level register m (SOLm)
- Serial output register m (SOm)
- Serial standby control register 0 (SSC0)
- Input switch control register (ISC)
- Noise filter enable register 0 (NFEN0)
- Port input mode registers 0, 1, 3, 5, 7 (PIM0, PIM1, PIM3, PIM5, PIM7)
- Port output mode registers 0, 1, 3, 5, 7 (POM0, POM1, POM3, POM5, POM7)
- Port mode registers 0, 1, 3, 5 to 7 (PM0, PM1, PM3, PM5 to PM7)
- Port registers 0, 1, 3, 5 to 7 (P0, P1, P3, P5 to P7)

Remark m: Unit number (m = 0, 1), n: Channel number (n = 0 to 3)

19.3.1 Peripheral enable register 0 (PER0)

PER0 is used to enable or disable supplying the clock to the peripheral hardware. Clock supply to a hardware macro that is not used is stopped in order to reduce the power consumption and noise.

When serial array unit 0 is used, be sure to set bit 2 (SAU0EN) of this register to 1.

When serial array unit 1 is used, be sure to set bit 3 (SAU1EN) of this register to 1.

The PER0 register can be set by a 1-bit or 8-bit memory manipulation instruction.

Reset signal generation clears the PER0 register to 00H.

Figure 19 - 5 Format of Peripheral enable register 0 (PER0)

Address: F00F0H After reset: 00H R/W

Symbol	7	6	5	4	3	2	1	0
PER0	RTCEN	IRDAEN	ADCEN	IICA0EN	SAU1EN	SAU0EN	0	TAU0EN

SAUmEN	Control of serial array unit m input clock supply
0	Stops supply of input clock. • SFR used by serial array unit m cannot be written. • Serial array unit m is in the reset status.
1	Enables input clock supply. • SFR used by serial array unit m can be read/written.

Caution 1. When setting serial array unit m, be sure to first set the following registers with the SAUmEN bit set to 1. If SAUmEN = 0, writing to a control register of serial array unit m is ignored, and, even if the register is read, only the default value is read (except for the input switch control register (ISC), noise filter enable register 0 (NFEN0), port input mode registers 0, 1, 3, 5, 7 (PIM0, PIM1, PIM3, PIM5, PIM7), port output mode registers 0, 1, 3, 5, 7 (POM0, POM1, POM3, POM5, POM7), port mode registers 0, 1, 3, 5 to 7 (PM0, PM1, PM3, PM5 to PM7), port mode control registers 0, 1 (PMC0, PMC1), and port registers 0, 1, 3, 5 to 7 (P0, P1, P3, P5 to P7).

- **Serial clock select register m (SPSm)**
- **Serial mode register mn (SMRmn)**
- **Serial communication operation setting register mn (SCRmn)**
- **Serial data register mn (SDRmn)**
- **Serial flag clear trigger register mn (SIRmn)**
- **Serial status register mn (SSRmn)**
- **Serial channel start register m (SSm)**
- **Serial channel stop register m (STm)**
- **Serial channel enable status register m (SEm)**
- **Serial output enable register m (SOEm)**
- **Serial output level register m (SOLm)**
- **Serial output register m (SOm)**
- **Serial standby control register 0 (SSC0)**

Caution 2. Be sure to clear bit 1 to “0”.

19.3.2 Serial clock select register m (SPSm)

The SPSm register is a 16-bit register that is used to select two types of operation clocks (CKm0, CKm1) that are commonly supplied to each channel. CKm1 is selected by bits 7 to 4 of the SPSm register, and CKm0 is selected by bits 3 to 0.

Rewriting the SPSm register is prohibited when the register is in operation (when SEmn = 1).

The SPSm register can be set by a 16-bit memory manipulation instruction.

The lower 8 bits of the SPSm register can be set with an 8-bit memory manipulation instruction with SPSmL.

Reset signal generation clears the SPSm register to 0000H.

Figure 19 - 6 Format of Serial clock select register m (SPSm)

Address: F0126H, F0127H (SPS0), F0166H, F0167H (SPS1) After reset: 0000H R/W

Symbol	15	14	13	12	11	10	9	8	7	6	5	4	3	2	1	0
SPSm	0	0	0	0	0	0	0	0	PRS m13	PRS m12	PRS m11	PRS m10	PRS m03	PRS m02	PRS m01	PRS m00

PRS mk3	PRS mk2	PRS mk1	PRS mk0	Section of operation clock (CKmk)Note					
					f_{CLK} = 2 MHz	f_{CLK} = 5 MHz	f_{CLK} = 10 MHz	f_{CLK} = 20 MHz	f_{CLK} = 32 MHz
0	0	0	0	f_{CLK}	2 MHz	5 MHz	10 MHz	20 MHz	32 MHz
0	0	0	1	$f_{CLK}/2$	1 MHz	2.5 MHz	5 MHz	10 MHz	16 MHz
0	0	1	0	$f_{CLK}/2^2$	500 kHz	1.25 MHz	2.5 MHz	5 MHz	8 MHz
0	0	1	1	$f_{CLK}/2^3$	250 kHz	625 kHz	1.25 MHz	2.5 MHz	4 MHz
0	1	0	0	$f_{CLK}/2^4$	125 kHz	313 kHz	625 kHz	1.25 MHz	2 MHz
0	1	0	1	$f_{CLK}/2^5$	62.5 kHz	156 kHz	313 kHz	625 kHz	1 MHz
0	1	1	0	$f_{CLK}/2^6$	31.3 kHz	78.1 kHz	156 kHz	313 kHz	500 kHz
0	1	1	1	$f_{CLK}/2^7$	15.6 kHz	39.1 kHz	78.1 kHz	156 kHz	250 kHz
1	0	0	0	$f_{CLK}/2^8$	7.81 kHz	19.5 kHz	39.1 kHz	78.1 kHz	125 kHz
1	0	0	1	$f_{CLK}/2^9$	3.91 kHz	9.77 kHz	19.5 kHz	39.1 kHz	62.5 kHz
1	0	1	0	$f_{CLK}/2^{10}$	1.95 kHz	4.88 kHz	9.77 kHz	19.5 kHz	31.3 kHz
1	0	1	1	$f_{CLK}/2^{11}$	977 Hz	2.44 kHz	4.88 kHz	9.77 kHz	15.6 kHz
1	1	0	0	$f_{CLK}/2^{12}$	488 Hz	1.22 kHz	2.44 kHz	4.88 kHz	7.8 kHz
1	1	0	1	$f_{CLK}/2^{13}$	244 Hz	610 Hz	1.22 kHz	2.44 kHz	3.9 kHz
1	1	1	0	$f_{CLK}/2^{14}$	122 Hz	305 Hz	610 Hz	1.22 kHz	1.95 kHz
1	1	1	1	$f_{CLK}/2^{15}$	61 Hz	153 Hz	305 Hz	610 Hz	977 Hz

Note When changing the clock selected for f_{CLK} (by changing the system clock control register (CKC) value), do so after having stopped (serial channel stop register m (STm) = 000FH) the operation of the serial array unit (SAU).

Caution **Be sure to clear bits 15 to 8 to "0".**

Remark 1. f_{CLK}: CPU/peripheral hardware clock frequency
Remark 2. m: Unit number (m = 0, 1)
Remark 3. k = 0, 1

19.3.3 Serial mode register mn (SMRmn)

The SMRmn register is a register that sets an operation mode of channel n. It is also used to select an operation clock (f_{MCK}), specify whether the serial clock (f_{SCK}) may be input or not, set a start trigger, an operation mode (Simplified SPI (CSI), UART, or simplified I^2C), and an interrupt source. This register is also used to invert the level of the receive data only in the UART mode.

Rewriting the SMRmn register is prohibited when the register is in operation (when SEmn = 1). However, the MDmn0 bit can be rewritten during operation.

The SMRmn register can be set by a 16-bit memory manipulation instruction.

Reset signal generation sets the SMRmn register to 0020H.

Figure 19 - 7 Format of Serial mode register mn (SMRmn) (1/2)

Address: F0110H, F0111H (SMR00) to F0116H, F0117H (SMR03), F0150H, F0151H (SMR10), F0152H, F0153H (SMR11) After reset: 0020H R/W

Symbol	15	14	13	12	11	10	9	8	7	6	5	4	3	2	1	0
SMRmn	CKSmn	CCSmn	0	0	0	0	0	STSmn Note	0	SISmn0 Note	1	0	0	MDmn2	MDmn1	MDmn0

CKSmn	Selection of operation clock (f_{MCK}) of channel n
0	Operation clock CKm0 set by the SPSm register
1	Operation clock CKm1 set by the SPSm register
Operation clock (f_{MCK}) is used by the edge detector. In addition, depending on the setting of the CCSmn bit and the higher 7 bits of the SDRmn register, a transfer clock (f_{TCLK}) is generated.	

CCSmn	Selection of transfer clock (f_{TCLK}) of channel n
0	Divided operation clock f_{MCK} specified by the CKSmn bit
1	Clock input f_{SCK} from the SCKp pin (slave transfer in Simplified SPI (CSI) mode)
Transfer clock f_{TCLK} is used for the shift register, communication controller, output controller, interrupt controller, and error controller. When CCSmn = 0, the division ratio of operation clock (f_{MCK}) is set by the higher 7 bits of the SDRmn register.	

STSmn Note	Selection of start trigger source
0	Only software trigger is valid (selected for Simplified SPI (CSI), UART transmission, and simplified I^2C).
1	Valid edge of the RxDq pin (selected for UART reception)
Transfer is started when the above source is satisfied after 1 is set to the SSm register.	

Note The SMR01, SMR03, and SMR11 registers only.

Caution **Be sure to clear bits 13 to 9, 7, 4, and 3 (or bits 13 to 6, 4, and 3 for the SMR00, SMR02, SMR10, or SMR12 register) to "0". Be sure to set bit 5 to "1".**

Remark m: Unit number (m = 0, 1), n: Channel number (n = 0 to 3), p: CSI number (p = 00, 01, 10, 11, 20, 21), q: UART number (q = 0 to 2), r: IIC number (r = 00, 01, 10, 11, 20, 21)

Figure 19 - 8 Format of Serial mode register mn (SMRmn) (2/2)

Address: F0110H, F0111H (SMR00) to F0116H, F0117H (SMR03), F0150H, F0151H (SMR10), F0152H, F0153H (SMR11) After reset: 0020H R/W

Symbol	15	14	13	12	11	10	9	8	7	6	5	4	3	2	1	0
SMRmn	CKS mn	CCS mn	0	0	0	0	0	STS mn Note	0	SIS mn0 Note	1	0	0	MD mn2	MD mn1	MD mn0

SIS mn0 Note	Controls inversion of level of receive data of channel n in UART mode
0	Falling edge is detected as the start bit. The input communication data is captured as is.
1	Rising edge is detected as the start bit. The input communication data is inverted and captured.

MD mn2	MD mn1	Setting of operation mode of channel n
0	0	Simplified SPI (CSI) mode
0	1	UART mode
1	0	Simplified I^{2}C mode
1	1	Setting prohibited

MD mn0	Selection of interrupt source of channel n
0	Transfer end interrupt
1	Buffer empty interrupt (Occurs when data is transferred from the SDRmn register to the shift register.)
For successive transmission, the next transmit data is written by setting the MDmn0 bit to 1 when SDRmn data has run out.	

Note The SMR01, SMR03, and SMR11 registers only.

Caution **Be sure to clear bits 13 to 9, 7, 4, and 3 (or bits 13 to 6, 4, and 3 for the SMR00, SMR02, or SMR10 register) to “0”. Be sure to set bit 5 to “1”.**

Remark m: Unit number (m = 0, 1), n: Channel number (n = 0 to 3), p: CSI number (p = 00, 01, 10, 11, 20, 21), q: UART number (q = 0 to 2), r: IIC number (r = 00, 01, 10, 11, 20, 21)

19.3.4 Serial communication operation setting register mn (SCRmn)

The SCRmn register is a communication operation setting register of channel n. It is used to set a data transmission/reception mode, phase of data and clock, whether an error signal is to be masked or not, parity bit, start bit, stop bit, and data length.

Rewriting the SCRmn register is prohibited when the register is in operation (when SEmn = 1).

The SCRmn register can be set by a 16-bit memory manipulation instruction.

Reset signal generation sets the SCRmn register to 0087H.

Figure 19 - 9 Format of Serial communication operation setting register mn (SCRmn) (1/2)

Address: F0118H, F0119H (SCR00) to F011EH, F011FH (SCR03), F0158H, F0159H (SCR10), F015AH, F015BH (SCR11) After reset: 0087H R/W

Symbol	15	14	13	12	11	10	9	8	7	6	5	4	3	2	1	0
SCRmn	TXE mn	RXE mn	DAP mn	CKP mn	0	EOC mn	PTC mn1	PTC mn0	DIR mn	0	SLCm n1 Note 1	SLC mn0	0	1	DLSm n1 Note 2	DLS mn0

TXE mn	RXE mn	Setting of operation mode of channel n
0	0	Disable communication.
0	1	Reception only
1	0	Transmission only
1	1	Transmission/reception

DAP mn	CKP mn	Selection of data and clock phase in Simplified SPI (CSI) mode	Type
0	0	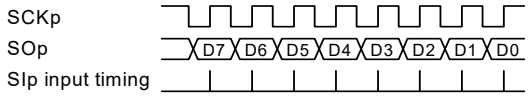	1
0	1	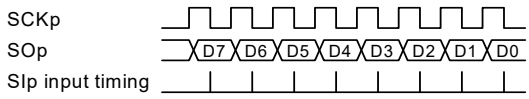	2
1	0	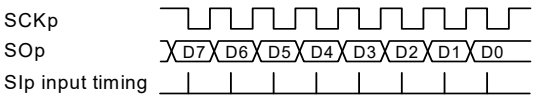	3
1	1	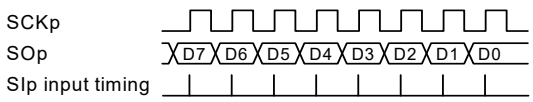	4
Be sure to set DAPmn, CKPmn = 0, 0 in the UART mode and simplified I²C mode.			

EOC mn	Mask control of error interrupt signal (INTSREx (x = 0 to 2))
0	Disables generation of error interrupt INTSREx (INTSRx is generated).
1	Enables generation of error interrupt INTSREx (INTSRx is not generated if an error occurs).
Set EOCmn = 0 in the simplified SPI (CSI) mode, simplified I²C mode, and during UART transmission[Note 3].	

Note 1. The SCR00, SCR02, and SCR10 registers only.

Note 2. The SCR00 and SCR01 registers only. Others are fixed to 1.

Note 3. When using CSImn not with EOCmn = 0, error interrupt INTSREn may be generated.

Caution **Be sure to clear bits 3, 6, and 11 to "0" (also clear bit 5 of the SCR01, SCR03, or SCR11 register to 0). Be sure to set bit 2 to "1".**

Remark m: Unit number (m = 0, 1), n: Channel number (n = 0 to 3), p: CSI number (p = 00, 01, 10, 11, 20, 21)

Figure 19 - 10 Format of Serial communication operation setting register mn (SCRmn) (2/2)

Address: F0118H, F0119H (SCR00) to F011EH, F011FH (SCR03), F0158H, F0159H (SCR10), F015AH, F015BH (SCR11) After reset: 0087H R/W

Symbol	15	14	13	12	11	10	9	8	7	6	5	4	3	2	1	0
SCRmn	TXE mn	RXE mn	DAP mn	CKP mn	0	EOC mn	PTC mn1	PTC mn0	DIR mn	0	SLCm n1 Note 1	SLC mn0	0	1	DLSm n1 Note 2	DLS mn0

PTC mn1	PTC mn0	Setting of parity bit in UART mode	
		Transmission	Reception
0	0	Does not output the parity bit.	Receives without parity
0	1	Outputs 0 parity[Note 3].	No parity judgment
1	0	Outputs even parity.	Judged as even parity.
1	1	Outputs odd parity.	Judges as odd parity.
Be sure to set PTCmn1, PTCmn0 = 0, 0 in the Simplified SPI (CSI) mode and simplified I^{2}C mode.			

DIR mn	Selection of data transfer sequence in Simplified SPI (CSI) and UART modes
0	Inputs/outputs data with MSB first.
1	Inputs/outputs data with LSB first.
Be sure to clear DIRmn = 0 in the simplified I^{2}C mode.	

SLCmn1 Note 1	SLC mn0	Setting of stop bit in UART mode
0	0	No stop bit
0	1	Stop bit length = 1 bit
1	0	Stop bit length = 2 bits (mn = 00, 02, 10 only)
1	1	Setting prohibited
When the transfer end interrupt is selected, the interrupt is generated when all stop bits have been completely transferred. Set 1 bit (SLCmn1, SLCmn0 = 0, 1) during UART reception and in the simplified I^{2}C mode. Set no stop bit (SLCmn1, SLCmn0 = 0, 0) in the Simplified SPI (CSI) mode. Set 1 bit (SLCmn1, SLCmn0 = 0, 1) or 2 bits (SLCmn1, SLCmn0 = 1, 0) during UART transmission.		

DLSmn1 Note 2	DLS mn0	Setting of data length in Simplified SPI (CSI) and UART modes
0	1	9-bit data length (stored in bits 0 to 8 of the SDRmn register) (settable in UART mode only)
1	0	7-bit data length (stored in bits 0 to 6 of the SDRmn register)
1	1	8-bit data length (stored in bits 0 to 7 of the SDRmn register)
Other than above		Setting prohibited
Be sure to set DLSmn1, DLSmn0 = 1, 1 in the simplified I^{2}C mode.		

Note 1. The SCR00, SCR02, and SCR10 registers only.
Note 2. The SCR00 and SCR01 registers only. Others are fixed to 1.
Note 3. 0 is always added regardless of the data contents.

Caution **Be sure to clear bits 3, 6, and 11 to "0" (also clear bit 5 of the SCR01, SCR03, or SCR11 register to 0). Be sure to set bit 2 to "1".**

Remark m: Unit number (m = 0, 1), n: Channel number (n = 0 to 3), p: CSI number (p = 00, 01, 10, 11, 20, 21)

19.3.5 Serial data register mn (SDRmn)

The SDRmn register is the transmit/receive data register (16 bits) of channel n.

Bits 8 to 0 (lower 9 bits) of SDR00, SDR01, SDR10, SDR11 or bits 7 to 0 (lower 8 bits) of SDR02, SDR03, SDR10, and SDR11 function as a transmit/receive buffer register, and bits 15 to 9 (higher 7 bits) are used as a register that sets the division ratio of the operation clock (f_{MCK}).

If the CCSmn bit of serial mode register mn (SMRmn) is cleared to 0, the clock set by dividing the operating clock by the higher 7 bits of the SDRmn register is used as the transfer clock.

If the CCSmn bit of serial mode register mn (SMRmn) is set to 1, set bits 15 to 9 (upper 7 bits) of SDR00, SDR01, SDR10, and SDR11 to 0000000B. The input clock f_{SCK} (slave transfer in Simplified SPI (CSI) mode) from the SCKp pin is used as the transfer clock.

The lower 8/9 bits of the SDRmn register function as a transmit/receive buffer register. During reception, the parallel data converted by the shift register is stored in the lower 8/9 bits, and during transmission, the data to be transmitted to the shift register is set to the lower 8/9 bits.

The SDRmn register can be read or written in 16-bit units.

However, the higher 7 bits can be written or read only when the operation is stopped (SEmn = 0). During operation (SEmn = 1), a value is written only to the lower 8/9 bits of the SDRmn register. When the SDRmn register is read during operation, the higher 7 bits are always read as 0.

Reset signal generation clears the SDRmn register to 0000H.

Figure 19 - 11 Format of Serial data register mn (SDRmn)

Address: FFF10H, FFF11H (SDR00), FFF12H, FFF13H (SDR01) After reset: 0000H R/W
FFF48H, FFF49H (SDR10), FFF4AH, FFF4BH (SDR11)

	FFF11H (SDR00)								FFF10H (SDR00)							
Symbol	15	14	13	12	11	10	9	8	7	6	5	4	3	2	1	0
SDRmn																

Address: FFF44H, FFF45H (SDR02), FFF46H, FFF47H (SDR03) After reset: 0000H R/W

	FFF45H (SDR02)								FFF44H (SDR02)							
Symbol	15	14	13	12	11	10	9	8	7	6	5	4	3	2	1	0
SDRmn								0								

SDRmn[15:9]							Transfer clock set by dividing the operating clock
0	0	0	0	0	0	0	$f_{MCK}/2$
0	0	0	0	0	0	1	$f_{MCK}/4$
0	0	0	0	0	1	0	$f_{MCK}/6$
0	0	0	0	0	1	1	$f_{MCK}/8$
⋮	⋮	⋮	⋮	⋮	⋮	⋮	⋮
1	1	1	1	1	1	0	$f_{MCK}/254$
1	1	1	1	1	1	1	$f_{MCK}/256$

(**Cautions** and **Remarks** are listed on the next page.)

Caution 1. Be sure to clear bit 8 of the SDR02, SDR03, SDR10, or SDR11 register to "0".

Caution 2. Setting SDRmn[15:9] = (0000000B, 0000001B) is prohibited when UART is used.

Caution 3. Setting SDRmn[15:9] = 0000000B is prohibited when simplified I^2C is used. Set SDRmn[15:9] to 0000001B or greater.

Caution 4. When operation is stopped (SEmn = 0), do not rewrite SDRmn [7:0] by an 8-bit memory manipulation instruction (SDRmn [15:9] are all cleared to 0).

Remark 1. For the function of the lower 8/9 bits of the SDRmn register, see **19.2 Configuration of Serial Array Unit**.

Remark 2. m: Unit number (m = 0, 1), n: Channel number (n = 0 to 3)

19.3.6 Serial flag clear trigger register mn (SIRmn)

The SIRmn register is a trigger register that is used to clear each error flag of channel n.

When each bit (FECTmn, PECTmn, OVCTmn) of this register is set to 1, the corresponding bit (FEFmn, PEFmn, OVFmn) of serial status register mn is cleared to 0. Because the SIRmn register is a trigger register, it is cleared immediately when the corresponding bit of the SSRmn register is cleared.

The SIRmn register can be set by a 16-bit memory manipulation instruction.

The lower 8 bits of the SIRmn register can be set with an 8-bit memory manipulation instruction with SIRmnL.

Reset signal generation clears the SIRmn register to 0000H.

Figure 19 - 12 Format of Serial flag clear trigger register mn (SIRmn)

Address: F0108H, F0109H (SIR00) to F010EH, F010FH (SIR03), F0148H, F0149H (SIR10), F014AH, F014BH (SIR11) After reset: 0000H R/W

Symbol	15	14	13	12	11	10	9	8	7	6	5	4	3	2	1	0
SIRmn	0	0	0	0	0	0	0	0	0	0	0	0	0	FECTmn Note	PECTmn	OVCTmn

FECTmn Note	Clear trigger of framing error of channel n
0	Not cleared
1	Clears the FEFmn bit of the SSRmn register to 0.

PECTmn	Clear trigger of parity error flag of channel n
0	Not cleared
1	Clears the PEFmn bit of the SSRmn register to 0.

OVCTmn	Clear trigger of overrun error flag of channel n
0	Not cleared
1	Clears the OVFmn bit of the SSRmn register to 0.

Note The SIR01, SIR03, and SIR11 registers only.

Caution **Be sure to clear bits 15 to 3 (or bits 15 to 2 for the SIR00, SIR02, or SIR10 register) to "0".**

Remark 1. m: Unit number (m = 0, 1), n: Channel number (n = 0 to 3)

Remark 2. When the SIRmn register is read, 0000H is always read.

19.3.7 Serial status register mn (SSRmn)

The SSRmn register is a register that indicates the communication status and error occurrence status of channel n. The errors indicated by this register are a framing error, parity error, and overrun error.

The SSRmn register can be read by a 16-bit memory manipulation instruction.

The lower 8 bits of the SSRmn register can be set with an 8-bit memory manipulation instruction with SSRmnL.

Reset signal generation clears the SSRmn register to 0000H.

Figure 19 - 13 Format of Serial status register mn (SSRmn) (1/2)

Address: F0100H, F0101H (SSR00) to F0106H, F0107H (SSR03), F0140H, F0141H (SSR10), F0142H, F0143H (SSR11) After reset: 0000H R

Symbol	15	14	13	12	11	10	9	8	7	6	5	4	3	2	1	0
SSRmn	0	0	0	0	0	0	0	0	0	TSF mn	BFF mn	0	0	FEF mn Note	PEF mn	OVF mn

TSF mn	Communication status indication flag of channel n
0	Communication is stopped or suspended.
1	Communication is in progress.
<Clear conditions> • The STmn bit of the STm register is set to 1 (communication is stopped) or the SSmn bit of the SSm register is set to 1 (communication is suspended). • Communication ends. <Set condition> • Communication starts.	

BFF mn	Buffer register status indication flag of channel n
0	Valid data is not stored in the SDRmn register.
1	Valid data is stored in the SDRmn register.
<Clear conditions> • Transferring transmit data from the SDRmn register to the shift register ends during transmission. • Reading receive data from the SDRmn register ends during reception. • The STmn bit of the STm register is set to 1 (communication is stopped) or the SSmn bit of the SSm register is set to 1 (communication is enabled). <Set conditions> • Transmit data is written to the SDRmn register while the TXEmn bit of the SCRmn register is set to 1 (transmission or transmission and reception mode in each communication mode). • Receive data is stored in the SDRmn register while the RXEmn bit of the SCRmn register is set to 1 (reception or transmission and reception mode in each communication mode). • A reception error occurs.	

Note The SSR01, SSR03, and SSR11 registers only.

Caution **When the simplified SPI (CSI) is handling reception in the SNOOZE mode (SWCm = 1), the BFFmn flag will not change.**

Remark m: Unit number (m = 0, 1), n: Channel number (n = 0 to 3)

Figure 19 - 14 Format of Serial status register mn (SSRmn) (2/2)

Address: F0100H, F0101H (SSR00) to F0106H, F0107H (SSR03), F0140H, F0141H (SSR10), F0142H, F0143H (SSR11) After reset: 0000H R

Symbol	15	14	13	12	11	10	9	8	7	6	5	4	3	2	1	0
SSRmn	0	0	0	0	0	0	0	0	0	TSF mn	BFF mn	0	0	FEF mn Note	PEF mn	OVF mn

FEF mn Note	Framing error detection flag of channel n
0	No error occurs.
1	An error occurs (during UART reception).
<Clear condition> • 1 is written to the FECTmn bit of the SIRmn register. <Set condition> • A stop bit is not detected when UART reception ends.	

PEF mn	Parity error detection flag of channel n
0	No error occurs.
1	An error occurs (during UART reception) or ACK is not detected (during I²C transmission).
<Clear condition> • 1 is written to the PECTmn bit of the SIRmn register. <Set condition> • The parity of the transmit data and the parity bit do not match when UART reception ends (parity error). • No ACK signal is returned from the slave channel at the ACK reception timing during I²C transmission (ACK is not detected).	

OVF mn	Overrun error detection flag of channel n
0	No error occurs.
1	An error occurs
<Clear condition> • 1 is written to the OVCTmn bit of the SIRmn register. <Set condition> • Even though receive data is stored in the SDRmn register, that data is not read and transmit data or the next receive data is written while the RXEmn bit of the SCRmn register is set to 1 (reception or transmission and reception mode in each communication mode). • Transmit data is not ready for slave transmission or transmission and reception in Simplified SPI (CSI) mode.	

Note The SSR01, SSR03, and SSR11 registers only.

Caution 1. If data is written to the SDRmn register when BFFmn = 1, the transmit/receive data stored in the register is discarded and an overrun error (OVEmn = 1) is detected.

Caution 2. When the simplified SPI (CSI) is handling reception in the SNOOZE mode (SWCm = 1), the OVFmn flag will not change.

Remark m: Unit number (m = 0, 1), n: Channel number (n = 0 to 3)

19.3.8 Serial channel start register m (SSm)

The SSm register is a trigger register that is used to enable starting communication/count by each channel.

When 1 is written a bit of this register (SSmn), the corresponding bit (SEmn) of serial channel enable status register m (SEm) is set to 1 (Operation is enabled). Because the SSmn bit is a trigger bit, it is cleared immediately when SEmn = 1.

The SSm register can be set by a 16-bit memory manipulation instruction.

The lower 8 bits of the SSm register can be set with an 1-bit or 8-bit memory manipulation instruction with SSmL.

Reset signal generation clears the SSm register to 0000H.

Figure 19 - 15 Format of Serial channel start register m (SSm)

Address: F0122H, F0123H (SS0) After reset: 0000H R/W

Symbol	15	14	13	12	11	10	9	8	7	6	5	4	3	2	1	0
SS0	0	0	0	0	0	0	0	0	0	0	0	0	SS03	SS02	SS01	SS00

Address: F0162H, F0163H (SS1) After reset: 0000H R/W

Symbol	15	14	13	12	11	10	9	8	7	6	5	4	3	2	1	0
SS1	0	0	0	0	0	0	0	0	0	0	0	0	0	0	SS11	SS10

SSmn	Operation start trigger of channel n
0	No trigger operation
1	Sets the SEmn bit to 1 and enters the communication wait status Note.

Note If set the SSmn = 1 to during a communication operation, will wait status to stop the communication. At this time, holding status value of control register and shift register, SCKmn and SOmn pins, and FEFmn, PEFmn, OVFmn flags.

Caution 1. Be sure to clear bits 15 to 4 of the SS0 register and bits 15 to 2 of the SS1 register to "0".

Caution 2. For the UART reception, set the RXEmn bit of SCRmn register to 1, and then be sure to set SSmn to 1 after 4 or more f_{MCK} clocks have elapsed.

Remark 1. m: Unit number (m = 0, 1), n: Channel number (n = 0 to 3)

Remark 2. When the SSm register is read, 0000H is always read.

19.3.9 Serial channel stop register m (STm)

The STm register is a trigger register that is used to enable stopping communication/count by each channel. When 1 is written a bit of this register (STmn), the corresponding bit (SEmn) of serial channel enable status register m (SEm) is cleared to 0 (operation is stopped). Because the STmn bit is a trigger bit, it is cleared immediately when SEmn = 0.

The STm register can set written by a 16-bit memory manipulation instruction.

The lower 8 bits of the STm register can be set with a 1-bit or 8-bit memory manipulation instruction with STmL.

Reset signal generation clears the STm register to 0000H.

Figure 19 - 16 Format of Serial channel stop register m (STm)

Address: F0124H, F0125H (ST0) After reset: 0000H R/W

Symbol	15	14	13	12	11	10	9	8	7	6	5	4	3	2	1	0
ST0	0	0	0	0	0	0	0	0	0	0	0	0	ST03	ST02	ST01	ST00

Address: F0164H, F0165H (ST1) After reset: 0000H R/W

Symbol	15	14	13	12	11	10	9	8	7	6	5	4	3	2	1	0
ST1	0	0	0	0	0	0	0	0	0	0	0	0	0	0	ST11	ST10

STm n	Operation stop trigger of channel n
0	No trigger operation
1	Clears the SEmn bit to 0 and stops the communication operation[Note].

Note Holding status value of the control register and shift register, the SCKmn and SOmn pins, and FEFmn, PEFmn, OVFmn flags.

Caution **Be sure to clear bits 15 to 4 of the ST0 register and bits 15 to 2 of the ST1 register to "0".**

Remark 1. m: Unit number (m = 0, 1), n: Channel number (n = 0 to 3)

Remark 2. When the STm register is read, 0000H is always read.

19.3.10 Serial channel enable status register m (SEm)

The SEm register indicates whether data transmission/reception operation of each channel is enabled or stopped.

When 1 is written a bit of serial channel start register m (SSm), the corresponding bit of this register is set to 1.

When 1 is written a bit of serial channel stop register m (STm), the corresponding bit is cleared to 0.

Channel n that is enabled to operate cannot rewrite by software the value of the CKOmn bit (serial clock output of channel n) of serial output register m (SOm) to be described below, and a value reflected by a communication operation is output from the serial clock pin.

Channel n that stops operation can set the value of the CKOmn bit of the SOm register by software and output its value from the serial clock pin. In this way, any waveform, such as that of a start condition/stop condition, can be created by software.

The SEm register can be read by a 16-bit memory manipulation instruction.

The lower 8 bits of the SEm register can be set with a 1-bit or 8-bit memory manipulation instruction with SEmL.

Reset signal generation clears the SEm register to 0000H.

Figure 19 - 17 Format of Serial channel enable status register m (SEm)

Address: F0120H, F0121H (SE0) After reset: 0000H R

Symbol	15	14	13	12	11	10	9	8	7	6	5	4	3	2	1	0
SE0	0	0	0	0	0	0	0	0	0	0	0	0	SE03	SE02	SE01	SE00

Address: F0160H, F0161H (SE1) After reset: 0000H R

Symbol	15	14	13	12	11	10	9	8	7	6	5	4	3	2	1	0
SE1	0	0	0	0	0	0	0	0	0	0	0	0	0	0	SE11	SE10

SEm n	Indication of operation enable/stop status of channel n
0	Operation stops
1	Operation is enabled.

Remark m: Unit number (m = 0, 1), n: Channel number (n = 0 to 3)

19.3.11 Serial output enable register m (SOEm)

The SOEm register is a register that is used to enable or stop output of the serial communication operation of each channel.

Channel n that enables serial output cannot rewrite by software the value of the SOmn bit of serial output register m (SOm) to be described below, and a value reflected by a communication operation is output from the serial data output pin.

For channel n, whose serial output is stopped, the SOmn bit value of the SOm register can be set by software, and that value can be output from the serial data output pin. In this way, any waveform of the start condition and stop condition can be created by software.

The SOEm register can be set by a 16-bit memory manipulation instruction.

The lower 8 bits of the SOEm register can be set with a 1-bit or 8-bit memory manipulation instruction with SOEmL.

Reset signal generation clears the SOEm register to 0000H.

Figure 19 - 18 Format of Serial output enable register m (SOEm)

Address: F012AH, F012BH After reset: 0000H R/W

Symbol	15	14	13	12	11	10	9	8	7	6	5	4	3	2	1	0
SOE0	0	0	0	0	0	0	0	0	0	0	0	0	SOE03	SOE02	SOE01	SOE00

Address: F016AH, F016BH After reset: 0000H R/W

Symbol	15	14	13	12	11	10	9	8	7	6	5	4	3	2	1	0
SOE1	0	0	0	0	0	0	0	0	0	0	0	0	0	0	SOE11	SOE10

SOEmn	Serial output enable/stop of channel n
0	Stops output by serial communication operation.
1	Enables output by serial communication operation.

Caution **Be sure to clear bits 15 to 4 of the SOE0 register and bits 15 to 2 of the SOE1 register to “0”.**

Remark m: Unit number (m = 0, 1), n: Channel number (n = 0 to 3)

19.3.12 Serial output register m (SOm)

The SOm register is a buffer register for serial output of each channel.

The value of the SOmn bit of this register is output from the serial data output pin of channel n.

The value of the CKOmn bit of this register is output from the serial clock output pin of channel n.

The SOmn bit of this register can be rewritten by software only when serial output is disabled (SOEmn = 0). When serial output is enabled (SOEmn = 1), rewriting by software is ignored, and the value of the register can be changed only by a serial communication operation.

The CKOmn bit of this register can be rewritten by software only when the channel operation is stopped (SEmn = 0). While channel operation is enabled (SEmn = 1), rewriting by software is ignored, and the value of the CKOmn bit can be changed only by a serial communication operation.

To use a pin for the serial interface as a port function pin other than a serial interface function pin, set the corresponding the CKOmn and SOmn bits to 1.

The SOm register can be set by a 16-bit memory manipulation instruction.

<R> Reset signal generation clears the SOm register to 0F0FH.

Figure 19 - 19 Format of Serial output register m (SOm)

Address: F0128H, F0129H After reset: 0F0FH R/W

Symbol	15	14	13	12	11	10	9	8	7	6	5	4	3	2	1	0
SO0	0	0	0	0	CKO03	CKO02	CKO01	CKO00	0	0	0	0	SO03	SO02	SO01	SO00

<R> Address: F0168H, F0169H After reset: 0303 R/W

Symbol	15	14	13	12	11	10	9	8	7	6	5	4	3	2	1	0
SO1	0	0	0	0	0	0	CKO11	CKO10	0	0	0	0	0	0	SO11	SO10

<R>

CKOmn	Serial clock output of channel n
0	Serial clock output value is “0”.
1	Serial clock output value is “1”.

SOmn	Serial data output of channel n
0	Serial data output value is “0”.
1	Serial data output value is “1”.

<R> **Caution** **Be sure to clear bits 15 to 12 and 7 to 4 of the SO0 register to “0”.**
Be sure to clear bits 15 to 10 and 7 to 2 of the SO1 register to “0”.

Remark m: Unit number (m = 0, 1), n: Channel number (n = 0 to 3)

19.3.13 Serial output level register m (SOLm)

The SOLm register is a register that is used to set inversion of the data output level of each channel.

This register can be set only in the UART mode. Be sure to set 0 for corresponding bit in the Simplified SPI (CSI) mode and simplifies I^2C mode.

Inverting channel n by using this register is reflected on pin output only when serial output is enabled (SOEmn = 1). When serial output is disabled (SOEmn = 0), the value of the SOmn bit is output as is.

Rewriting the SOLm register is prohibited when the register is in operation (when SEmn = 1).

The SOLm register can be set by a 16-bit memory manipulation instruction.

The lower 8 bits of the SOLm register can be set with an 8-bit memory manipulation instruction with SOLmL.

Reset signal generation clears the SOLm register to 0000H.

Figure 19 - 20 Format of Serial output level register m (SOLm)

Address: F0134H, F0135H (SOL0) After reset: 0000H R/W

Symbol	15	14	13	12	11	10	9	8	7	6	5	4	3	2	1	0
SOL0	0	0	0	0	0	0	0	0	0	0	0	0	0	SOL 02	0	SOL 00

Address: F0174H, F0175H (SOL1) After reset: 0000H R/W

Symbol	15	14	13	12	11	10	9	8	7	6	5	4	3	2	1	0
SOL1	0	0	0	0	0	0	0	0	0	0	0	0	0	0	0	SOL 10

SOL mn	Selects inversion of the level of the transmit data of channel n in UART mode
0	Communication data is output as is.
1	Communication data is inverted and output.

Caution **Be sure to clear bits 15 to 3, and 1 of the SOL0 register and bits 15 to 1 of the SOL1 register to "0".**

Remark m: Unit number (m = 0, 1), n: Channel number (n = 0, 2)

Figure 19 - 21 shows examples in which the level of transmit data is reversed during UART transmission.

Figure 19 - 21 Examples of Reverse Transmit Data

(a) Non-reverse Output (SOLmn = 0)

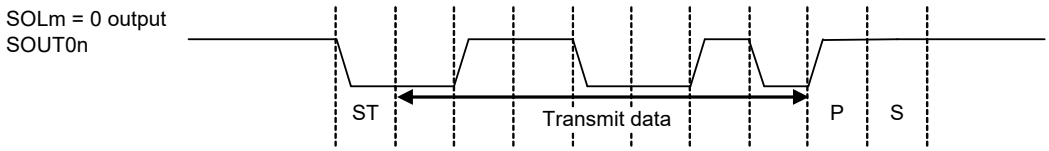

(b) Reverse Output (SOLmn = 1)

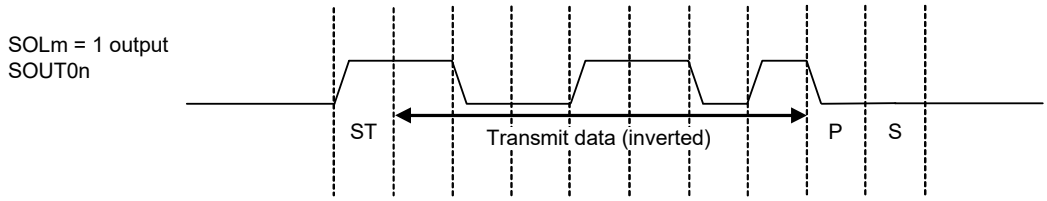

Remark m: Unit number (m = 0, 1), n: Channel number (n = 0, 2)

19.3.14 Serial standby control register 0 (SSC0)

The SSC0 register is used to control the startup of reception (the SNOOZE mode) while in the STOP mode when receiving CSI00 or UART0 serial data.
The SSC0 register can be set by a 16-bit memory manipulation instruction.
The lower 8 bits of the SSC0 register can be set with an 8-bit memory manipulation instruction with SSCmL.
Reset signal generation clears the SSC0 register to 0000H.

Caution The maximum transfer rate in the SNOOZE mode is as follows.
• When using CSI00, CSI20: Up to 1 Mbps
• When using UART0, UART2: 4800 bps only
(Can be used when FRQSEL4 in the option byte (000C2H) is set to 0.)

Figure 19 - 22 Format of Serial standby control register 0 (SSC0)

Address: F0138H (SSC0) After reset: 0000H R/W

Symbol	15	14	13	12	11	10	9	8	7	6	5	4	3	2	1	0
SSC0	0	0	0	0	0	0	0	0	0	0	0	0	0	0	SSEC0	SWC0

SSEC0	Selection of whether to enable or disable the generation of communication error interrupts in the SNOOZE mode
0	Enable the generation of error interrupts (INTSRE0/INTSRE2).
1	Disable the generation of error interrupts (INTSRE0/INTSRE2).
• The SSEC0 bit can be set to 1 or 0 only when both the SWC0 and EOC0n bits are set to 1 during UART reception in the SNOOZE mode. In other cases, clear the SSEC0 bit to 0. • Setting SSEC0, SWC0 = 1, 0 is prohibited.	

SWC0	Setting of the SNOOZE mode
0	Do not use the SNOOZE mode function.
1	Use the SNOOZE mode function.
• When there is a hardware trigger signal in the STOP mode, the STOP mode is exited, and simplified SPI (CSI) or UART reception is performed without operating the CPU (the SNOOZE mode). • The SNOOZE mode function can only be specified when the high-speed on-chip oscillator clock is selected for the CPU/peripheral hardware clock (f_{CLK}). If any other clock is selected, specifying this mode is prohibited. Specifying this mode is also prohibited when using UART while FRQSEL4 in the option byte (000C2H) is set to 1. • Even when using SNOOZE mode, be sure to set the SWC0 bit to 0 in normal operation mode and change it to 1 just before shifting to STOP mode. Also, be sure to change the SWC0 bit to 0 after returning from STOP mode to normal operation mode.	

Caution Setting SSEC0, SWC0 = 1, 0 is prohibited.

Figure 19 - 23 Interrupt in UART Reception Operation in SNOOZE Mode

EOC0n Bit	SSEC0 Bit	Reception Ended Successfully	Reception Ended in an Error
0	0	INTSRx is generated.	INTSRx is generated.
0	1	INTSRx is generated.	INTSRx is generated.
1	0	INTSRx is generated.	INTSREx is generated.
1	1	INTSRx is generated.	No interrupt is generated.

19.3.15 Input switch control register (ISC)

The ISC1 and ISC0 bits of the ISC register are used to realize a LIN-bus communication operation by UART0 in coordination with an external interrupt and the timer array unit.

When bit 0 is set to 1, the input signal of the serial data input (RxD0) pin is selected as an external interrupt (INTP0) that can be used to detect a wakeup signal.

When bit 1 is set to 1, the input signal of the serial data input (RxD0) pin is selected as a timer input, so that wake up signal can be detected, the low width of the break field, and the pulse width of the sync field can be measured by the timer.

The SSIE0 bit controls the $\overline{\text{SSI00}}$ pin input of channel 0 during CSI00 communication and in slave mode.

While a high level is being input to the $\overline{\text{SSI00}}$ pin, no transmission/reception operation is performed even if a serial clock is input. While a low level is being input to the $\overline{\text{SSI00}}$ pin, a transmission/reception operation is performed according to each mode setting if a serial clock is input.

The ISC register can be set by a 1-bit or 8-bit memory manipulation instruction.

Reset signal generation clears the ISC register to 00H.

Figure 19 - 24 Format of Input switch control register (ISC)

Address: F0073H After reset: 00H R/W

Symbol	7	6	5	4	3	2	1	0
ISC	SSIE00	0	0	0	0	0	ISC1	ISC0

SSIE00	Channel 0 $\overline{\text{SSI00}}$ input setting in Simplified SPI (CSI) communication and slave mode
0	Disables $\overline{\text{SSI00}}$ pin input.
1	Enables $\overline{\text{SSI00}}$ pin input.

ISC1	Switching channel 3 input of timer array unit 0
0	Uses the input signal of the TI03 pin as a timer input (normal operation).
1	Input signal of the RxD0 pin is used as timer input (detects the wakeup signal and measures the low width of the break field and the pulse width of the sync field).

ISC0	Switching external interrupt (INTP0) input
0	Uses the input signal of the INTP0 pin as an external interrupt (normal operation).
1	Uses the input signal of the RxD0 pin as an external interrupt (wakeup signal detection).

Caution Be sure to clear bits 6 to 2 to “0”.

19.3.16 Noise filter enable register 0 (NFEN0)

The NFEN0 register is used to set whether the noise filter can be used for the input signal from the serial data input pin to each channel.

Disable the noise filter of the pin used for simplified SPI (CSI) or simplified I^{2}C communication, by clearing the corresponding bit of this register to 0.

Enable the noise filter of the pin used for UART communication, by setting the corresponding bit of this register to 1.

When the noise filter is enabled, after synchronization is performed with the operation clock (f_{MCK}) of the target channel, 2-clock match detection is performed. When the noise filter is OFF, only synchronization is performed with the Operation clock of target channel (f_{MCK}).

The NFEN0 register can be set by a 1-bit or 8-bit memory manipulation instruction.

Reset signal generation clears the NFEN0 register to 00H.

Figure 19 - 25 Format of Noise filter enable register 0 (NFEN0)

Address: F0070H After reset: 00H R/W

Symbol	7	6	5	4	3	2	1	0
NFEN0	0	0	0	SNFEN20	0	SNFEN10	0	SNFEN00

SNFEN20	Use of noise filter of RxD2 pin
0	Noise filter OFF
1	Noise filter ON
Set SNFEN20 to 1 to use the RxD2 pin. Clear SNFEN20 to 0 to use the other than RxD2 pin.	

SNFEN10	Use of noise filter of RxD1 pin
0	Noise filter OFF
1	Noise filter ON
Set the SNFEN10 bit to 1 to use the RxD1 pin. Clear the SNFEN10 bit to 0 to use the other than RxD1 pin.	

SNFEN00	Use of noise filter of RxD0 pin
0	Noise filter OFF
1	Noise filter ON
Set the SNFEN00 bit to 1 to use the RxD0 pin. Clear the SNFEN00 bit to 0 to use the other than RxD0 pin.	

Caution Be sure to clear bits 7 to 5, 3, and 1 to “0”.

19.3.17 Registers controlling port functions of serial input/output pins

Using the serial array unit requires setting of the registers that control the port functions multiplexed on the target channel (port mode register (PMxx), port register (Pxx), port input mode register (PIMxx), port output mode register (POMxx), port mode control register (PMCxx)).

For details, see **4.3.1 Port mode registers (PMxx)**, **4.3.2 Port registers (Pxx)**, **4.3.4 Port input mode registers (PIMxx)**, **4.3.5 Port output mode registers (POMxx)**, and **4.3.6 Port mode control registers (PMCxx)**.

Specifically, using a port pin with a multiplexed serial data or serial clock output function (e.g. P02/ANI17/SO10/TxD1) for serial data or serial clock output, requires setting the corresponding bits in the port mode control register (PMCxx) and port mode register (PMxx) to 0, and the corresponding bit in the port register (Pxx) to 1.

When using the port pin in N-ch open-drain output (V_{DD} tolerance[Note 1]/EV_{DD} tolerance[Note 2]) mode, set the corresponding bit in the port output mode register (POMxx) to 1. When connecting an external device operating on a different potential (1.8 V, 2.5 V or 3 V), see **4.4.5 Handling different potential (1.8 V, 2.5 V, 3 V) by using I/O buffers**.

Example When P02/ANI17/SO10/TxD1 is to be used for serial data output
Set the PMC02 bit of port mode control register 0 to 0.
Set the PM02 bit of port mode register 0 to 0.
Set the P02 bit of port register 0 to 1.

Specifically, using a port pin with a multiplexed serial data or serial clock input function (e.g. P03/ANI16/SI10/RxD1/SDA10) for serial data or serial clock input, requires setting the corresponding bit in the port mode register (PMxx) to 1, and the corresponding bit in the port mode control register (PMCxx) to 0. In this case, the corresponding bit in the port register (Pxx) can be set to 0 or 1.

When the TTL input buffer is selected, set the corresponding bit in the port input mode register (PIMxx) to 1. When connecting an external device operating on a different potential (1.8 V, 2.5 V or 3 V), see **4.4.5 Handling different potential (1.8 V, 2.5 V, 3 V) by using I/O buffers**.

Example When P03/ANI16/SI10/RxD1/SDA10 is to be used for serial data input
Set the PMC03 bit of port mode control register 0 to 0.
Set the PM03 bit of port mode register 0 to 1.
Set the P03 bit of port register 0 to 0 or 1.

Note 1. 24 to 48-pin products

Note 2. 64-pin products

19.4 Operation Stop Mode

Each serial interface of serial array unit has the operation stop mode.
In this mode, serial communication cannot be executed, thus reducing the power consumption.
In addition, the pin for serial interface can be used as port function pins in this mode.

19.4.1 Stopping the operation by units

The stopping of the operation by units is set by using peripheral enable register 0 (PER0).
The PER0 register is used to enable or disable supplying the clock to the peripheral hardware. Clock supply to a hardware macro that is not used is stopped in order to reduce the power consumption and noise.
To stop the operation of serial array unit 0, set bit 2 (SAU0EN) to 0.
To stop the operation of serial array unit 1, set bit 3 (SAU1EN) to 0.

Figure 19 - 26 Peripheral Enable Register 0 (PER0) Setting When Stopping the Operation by Units

(a) Peripheral enable register 0 (PER0)... Set only the bit of SAUm to be stopped to 0.

	7	6	5	4	3	2	1	0
PER0	RTCEN ×	IRDAEN ×	ADCEN ×	IICA0EN ×	SAU1EN 0/1	SAU0EN 0/1	 0	TAU0EN ×

Control of SAUm input clock
0: Stops supply of input clock
1: Supplies input clock

Caution 1. If SAUmEN = 0, writing to a control register of serial array unit m is ignored, and, even if the register is read, only the default value is read
Note that this does not apply to the following registers.
- **Input switch control register (ISC)**
- **Noise filter enable register 0 (NFEN0)**
- **Port input mode registers 0, 1, 3, 5, 7 (PIM0, PIM1, PIM3, PIM5, PIM7)**
- **Port output mode registers 0, 1, 3, 5, 7 (POM0, POM1, POM3, POM5, POM7)**
- **Port mode registers 0, 1, 3, 5 to 7 (PM0, PM1, PM3, PM5 to PM7)**
- **Port registers 0, 1, 3, 5 to 7 (P0, P1, P3, P5 to P7)**

Caution 2. Be sure to clear bit 1 to "0".

Remark ×: Bits not used with serial array units (depending on the settings of other peripheral functions)
0/1: Set to 0 or 1 depending on the usage of the user

19.4.2 Stopping the operation by channels

The stopping of the operation by channels is set using each of the following registers.

Figure 19 - 27 Each Register Setting When Stopping the Operation by Channels

(a) Serial channel stop register m (STm)... This register is a trigger register that is used to enable stopping communication/count by each channel.

	15	14	13	12	11	10	9	8	7	6	5	4	3	2	1	0
STm	0	0	0	0	0	0	0	0	0	0	0	0	STm3 Note 0/1	STm2 Note 0/1	STm1 0/1	STm0 0/1

1: Clears the SEmn bit to 0 and stops the communication operation

* Because the STmn bit is a trigger bit, it is cleared immediately when SEmn = 0.

(b) Serial Channel Enable Status Register m (SEm)... This register indicates whether data transmission/reception operation of each channel is enabled or stopped.

	15	14	13	12	11	10	9	8	7	6	5	4	3	2	1	0
SEm	0	0	0	0	0	0	0	0	0	0	0	0	SEm3 Note 0/1	SEm2 Note 0/1	SEm1 0/1	SEm0 0/1

0: Operation stops

* The SEm register is a read-only status register, whose operation is stopped by using the STm register.
With a channel whose operation is stopped, the value of the CKOmn bit of the SOm register can be set by software.

(c) Serial output enable register m (SOEm)... This register is a register that is used to enable or stop output of the serial communication operation of each channel.

	15	14	13	12	11	10	9	8	7	6	5	4	3	2	1	0
SOEm	0	0	0	0	0	0	0	0	0	0	0	0	SOEm3 Note 0/1	SOEm2 Note 0/1	SOEm1 0/1	SOEm0 0/1

0: Stops output by serial communication operation

* For channel n, whose serial output is stopped, the SOmn bit value of the SOm register can be set by software.

(d) Serial output register m (SOm)... This register is a buffer register for serial output of each channel.

	15	14	13	12	11	10	9	8	7	6	5	4	3	2	1	0
SOm	0	0	0	0	CKOm3 Note 0/1	CKOm2 Note 0/1	CKOm1 0/1	CKOm0 0/1	0	0	0	0	SOm3 Note 0/1	SOm2 Note 0/1	SOm1 0/1	SOm0 0/1

1: Serial clock output value is “1”

1: Serial data output value is “1”

* When using pins corresponding to each channel as port function pins, set the corresponding CKOmn, SOmn bits to “1”.

Note For serial array unit 0 only.

Remark 1. m: Unit number (m = 0, 1), n: Channel number (n = 0 to 3)

Remark 2. ■: Setting disabled (set to the initial value)
0/1: Set to 0 or 1 depending on the usage of the user

19.5 Operation of Simplified SPI (CSI00, CSI01, CSI10, CSI11, CSI20, CSI21) Communication

This is a clocked communication function that uses three lines: serial clock (SCK) and serial data (SI and SO) lines.

[Data transmission/reception]
• Data length of 7 or 8 bits
• Phase control of transmit/receive data
• MSB/LSB first selectable
[Clock control]
• Master/slave selection
• Phase control of I/O clock
• Setting of transfer period by prescaler and internal counter of each channel
• Maximum transfer rate[Note]
During master communication: Max. $f_{CLK}/2$ (CSI00 only)
Max. $f_{CLK}/4$
During slave communication: Max. $f_{MCK}/6$
[Interrupt function]
• Transfer end interrupt/buffer empty interrupt
[Error detection flag]
• Overrun error

Simplified SPIs (CSIs) of following channels supports the SNOOZE mode. When SCK input is detected while in the STOP mode, the SNOOZE mode makes data reception that does not require the CPU possible. CSI00 can only be specified.

Note Use the clocks within a range satisfying the SCK cycle time (t_{KCY}) characteristics. For details, see **CHAPTER 37** or **CHAPTER 38 ELECTRICAL SPECIFICATIONS**.

The channels supporting Simplified SPI (CSI00, CSI01, CSI10, CSI11, CSI20, CSI21) are channels 0 to 3 of SAU0 and channels 0 to 3 of SAU1.

• 24, 32, 36-pin products

Unit	Channel	Used as Simplified SPI (CSI)	Used as UART	Used as Simplified I²C
0	0	CSI00 (supporting slave select input function)	UART0 (supporting LIN-bus)	IIC00
	1	—		—
	2	—	UART1	—
	3	CSI11		IIC11
1	0	CSI20	UART2	IIC20
	1	—		—

• 48-pin products

Unit	Channel	Used as Simplified SPI (CSI)	Used as UART	Used as Simplified I²C
0	0	CSI00 (supporting slave select input function)	UART0 (supporting LIN-bus)	IIC00
	1	CSI01		IIC01
	2	—	UART1	—
	3	CSI11		IIC11
1	0	CSI20	UART2	IIC20
	1	CSI21		IIC21

• 64-pin products

Unit	Channel	Used as Simplified SPI (CSI)	Used as UART	Used as Simplified I²C
0	0	CSI00 (supporting slave select input function)	UART0 (supporting LIN-bus)	IIC00
	1	CSI01		IIC01
	2	CSI10	UART1	IIC10
	3	CSI11		IIC11
1	0	CSI20	UART2	IIC20
	1	CSI21		IIC21

Simplified SPI (CSI00, CSI01, CIS10, CIS11, CIS20, CIS21) performs the following seven types of communication operations.

• Master transmission (See **19.5.1**.)
• Master reception (See **19.5.2**.)
• Master transmission/reception (See **19.5.3**.)
• Slave transmission (See **19.5.4**.)
• Slave reception (See **19.5.5**.)
• Slave transmission/reception (See **19.5.6**.)
• SNOOZE mode function (See **19.5.7**.)

19.5.1 Master transmission

Master transmission is that the RL78 microcontroller outputs a transfer clock and transmits data to another device.

Simplified SPI	CSI00	CSI01	CSI10	CSI11	CSI20	CSI21
Target channel	Channel 0 of SAU0	Channel 1 of SAU0	Channel 2 of SAU0	Channel 3 of SAU0	Channel 0 of SAU1	Channel 1 of SAU1
Pins used	SCK00, SO00	SCK01, SO01	SCK10, SO10	SCK11, SO11	SCK20, SO20	SCK21, SO21
Interrupt	INTCSI00	INTCSI01	INTCSI10	INTCSI11	INTCSI20	INTCSI21
	Transfer end interrupt (in single-transfer mode) or buffer empty interrupt (in continuous transfer mode) can be selected.					
Error detection flag	None					
Transfer rate[Note]	7 or 8 bits					
Data phase	Max. $f_{CLK}/2$ [Hz] (CSI00 only), $f_{CLK}/4$ [Hz] Min. $f_{CLK}/(2 \times 2^{15} \times 128)$ [Hz] f_{CLK}: System clock frequency					
Clock phase	Selectable by the DAPmn bit of the SCRmn register • DAPmn = 0: Data output starts from the start of the operation of the serial clock. • DAPmn = 1: Data output starts half a clock before the start of the serial clock operation.					
Data direction	Selectable by the CKPmn bit of the SCRmn register • CKPmn = 0: Non-reverse • CKPmn = 1: Reverse					
Transfer rate [Note]	MSB or LSB first					

Note Use this operation within a range that satisfies the conditions above and the peripheral functions characteristics in the electrical specifications (see **CHAPTER 37** or **CHAPTER 38 ELECTRICAL SPECIFICATIONS**).

Remark m: Unit number (m = 0, 1), n: Channel number (n = 0 to 3), mn = 00 to 03, 10, 11

(1) Register setting

Figure 19 - 28 Example of Contents of Registers for Master Transmission of Simplified SPI (CSI00, CSI01, CSI10, CSI11, CSI20, CSI21)

(a) Serial mode register mn (SMRmn)

	15	14	13	12	11	10	9	8	7	6	5	4	3	2	1	0
SMRmn	CKSmn 0/1	CCSmn 0	0	0	0	0	0	STSmn 0	0	SISmn0 0	1	0	0	MDmn2 0	MDmn1 0	MDmn0 0/1

Operation clock (f_{MCK}) of channel n
0: Prescaler output clock CKm0 set by the SPSm register
1: Prescaler output clock CKm1 set by the SPSm register

Interrupt source of channel n
0: Transfer end interrupt
1: Buffer empty interrupt

(b) Serial communication operation setting register mn (SCRmn)

	15	14	13	12	11	10	9	8	7	6	5	4	3	2	1	0
SCRmn	TXEmn 1	RXEmn 0	DAPmn 0/1	CKPmn 0/1	0	EOCmn 0	PTCmn1 0	PTCmn0 0	DIRmn 0/1	0	SLCmn1 0	SLCmn0 0	0	1	DLSmn1 1Note	DLSmn0 0/1

Selection of the data and clock phase (For details about the setting, see **19.3 Registers Controlling Serial Array Unit**.)

Selection of data transfer sequence
0: Inputs/outputs data with MSB first
1: Inputs/outputs data with LSB first

Setting of data length
0: 7-bit data length
1: 8-bit data length

(c) Serial data register mn (SDRmn) (lower 8 bits: SIOp)

	15	14	13	12	11	10	9	8	7	6	5	4	3	2	1	0
SDRmn	Baud rate setting (Operation clock (f_{MCK}) division setting)							0	Transmit data (Transmit data setting)							

SIOp

(d) Serial output register m (SOm)... Sets only the bits of the target channel.

	15	14	13	12	11	10	9	8	7	6	5	4	3	2	1	0
SOm	0	0	0	0	CKOm3 0/1	CKOm2 0/1	CKOm1 0/1	CKOm0 0/1	0	0	0	0	SOm3 0/1	SOm2 0/1	SOm1 0/1	SOm0 0/1

Communication starts when these bits are 1 if the clock phase is non-reversed (the CKPmn bit of the SCRmn = 0). If the clock phase is reversed (CKPmn = 1), communication starts when these bits are 0.

(e) Serial output enable register m (SOEm)... Sets only the bits of the target channel to 1.

	15	14	13	12	11	10	9	8	7	6	5	4	3	2	1	0
SOEm	0	0	0	0	0	0	0	0	0	0	0	0	SOEm3 0/1	SOm2 0/1	SOEm1 0/1	SOEm0 0/1

(f) Serial channel start register m (SSm)... Sets only the bits of the target channel to 1.

	15	14	13	12	11	10	9	8	7	6	5	4	3	2	1	0
SSm	0	0	0	0	0	0	0	0	0	0	0	0	SSm3 0/1	SSm2 0/1	SSm1 0/1	SSm0 0/1

Note Only provided for the SCR00 and SCR01 registers. This bit is fixed to 1 for the other registers.

Remark 1. m: Unit number (m = 0, 1), n: Channel number (n = 0 to 3), p: CSI number (p = 00, 01, 10, 11, 20, 21)
mn = 00 to 03, 10, 11

Remark 2. ■: Setting is fixed in the simplified SPI (CSI) master transmission mode,
■: Setting disabled (set to the initial value)
0/1: Set to 0 or 1 depending on the usage of the user

(2) Operation procedure

Figure 19 - 29 Initial Setting Procedure for Master Transmission

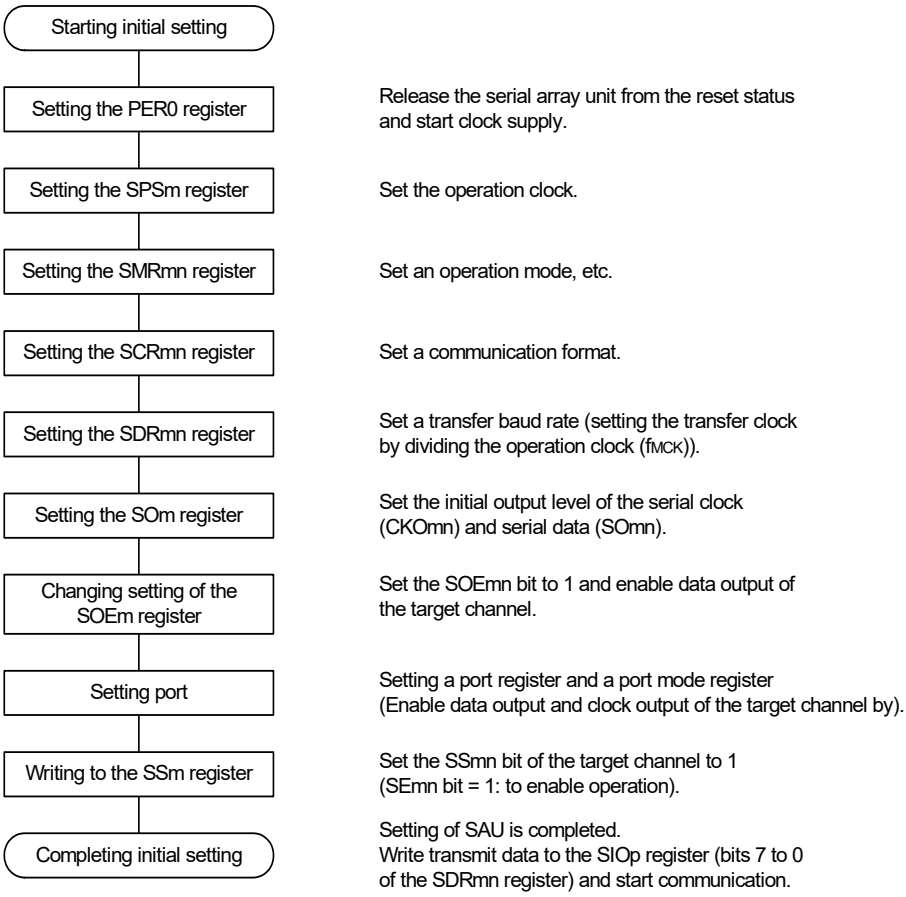

Figure 19 - 30 Procedure for Stopping Master Transmission

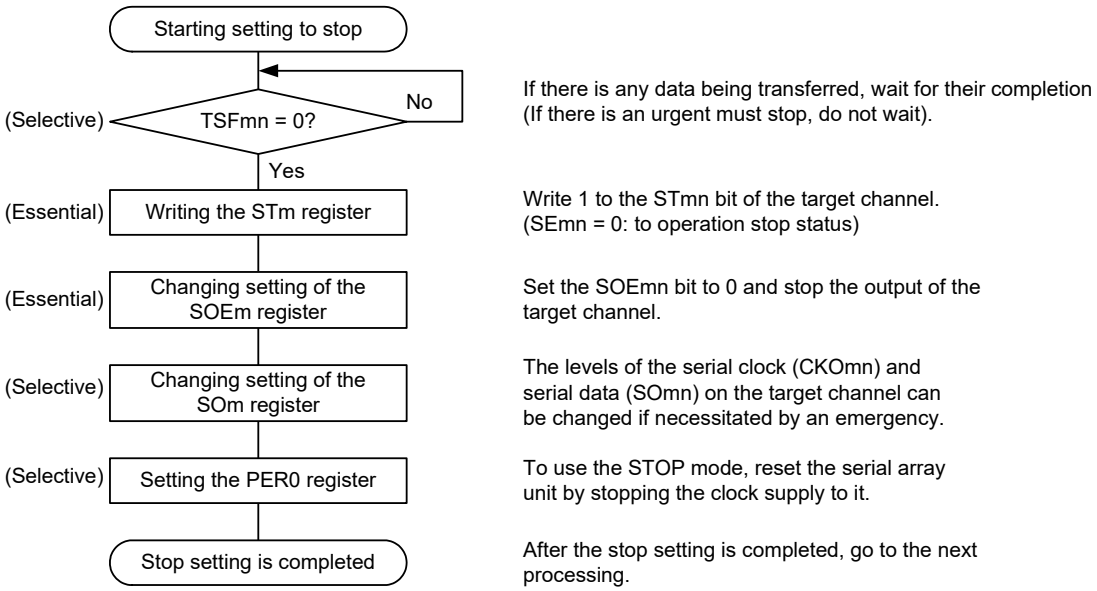

Figure 19 - 31 Procedure for Resuming Master Transmission

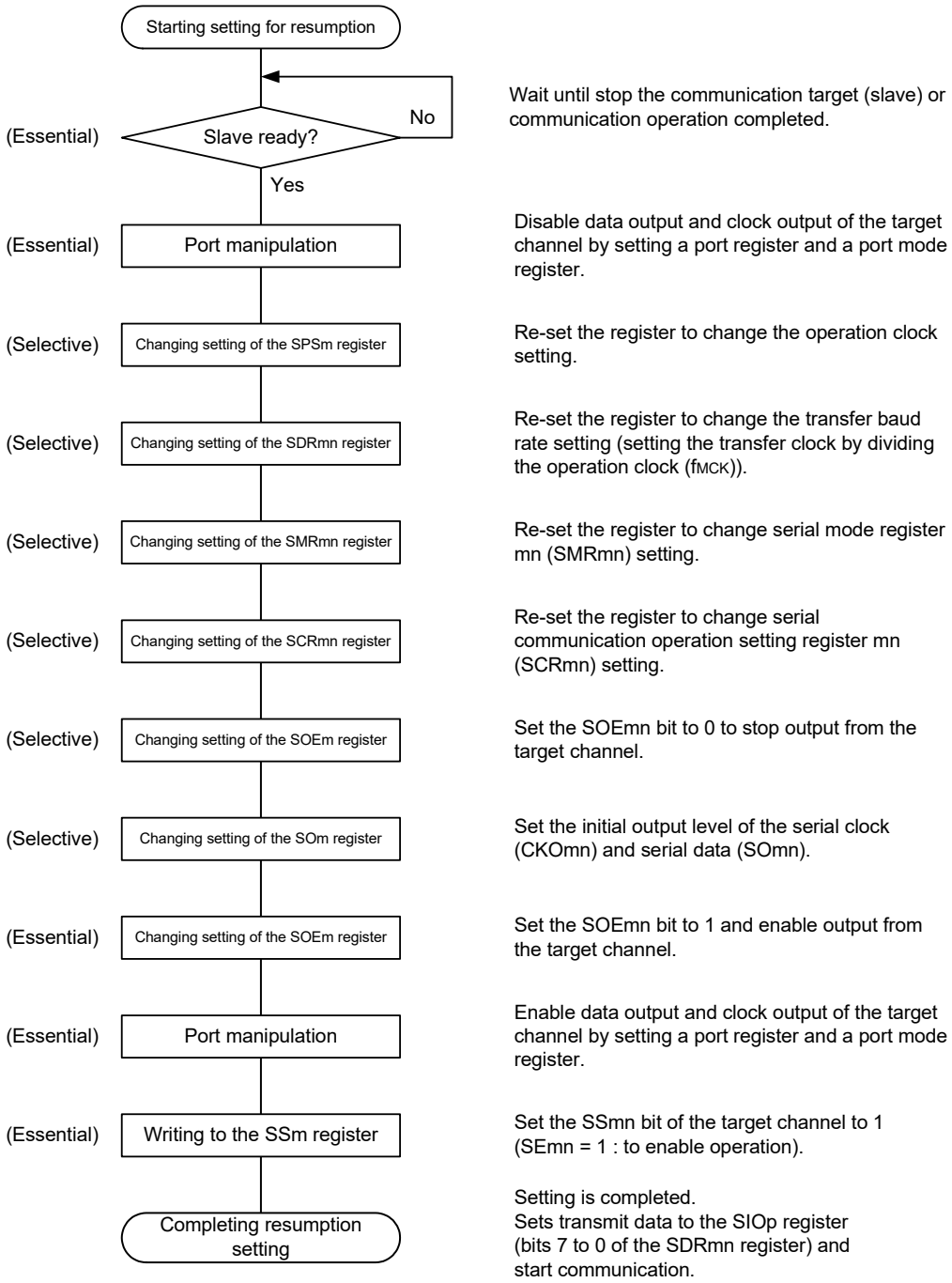

Remark If PER0 is rewritten while stopping the master transmission and the clock supply is stopped, wait until the transmission target (slave) stops or transmission finishes, and then perform initialization instead of restarting the transmission.

(3) Processing flow (in single-transmission mode)

Figure 19 - 32 Timing Chart of Master Transmission (in Single-Transmission Mode)
(Type 1: DAPmn = 0, CKPmn = 0)

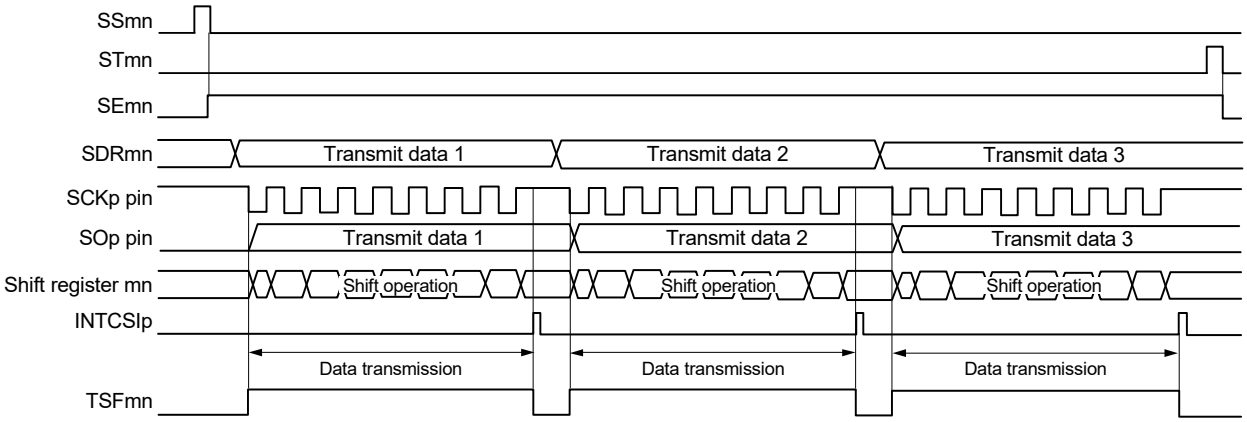

Remark m: Unit number (m = 0, 1), n: Channel number (n = 0 to 3), p: CSI number (p = 00, 01, 10, 11, 20, 21)
mn = 00 to 03, 10, 11

Figure 19 - 33 Flowchart of Master Transmission (in Single-Transmission Mode)

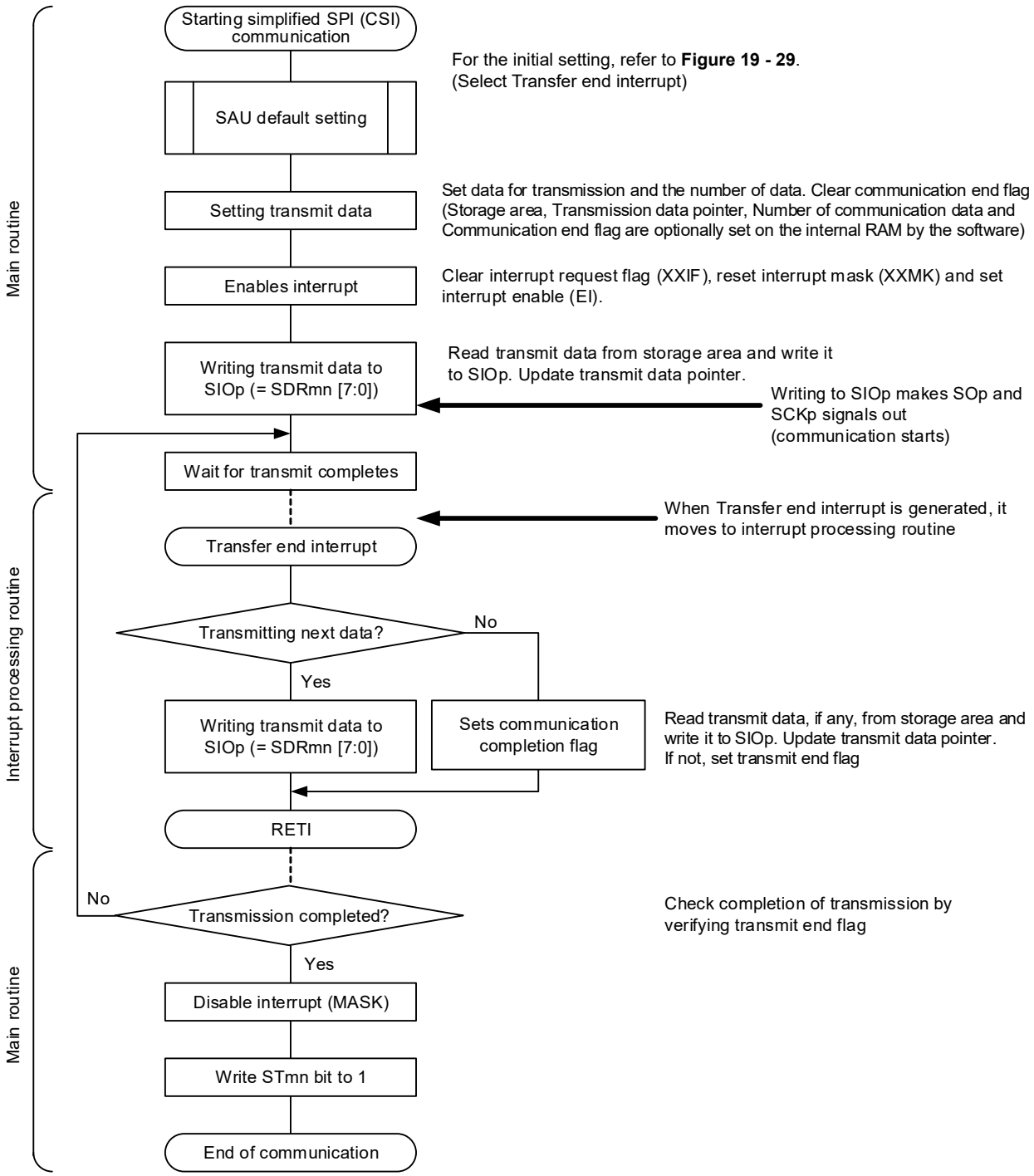

(4) Processing flow (in continuous transmission mode)

Figure 19 - 34 Timing Chart of Master Transmission (in Continuous Transmission Mode)
(Type 1: DAPmn = 0, CKPmn = 0)

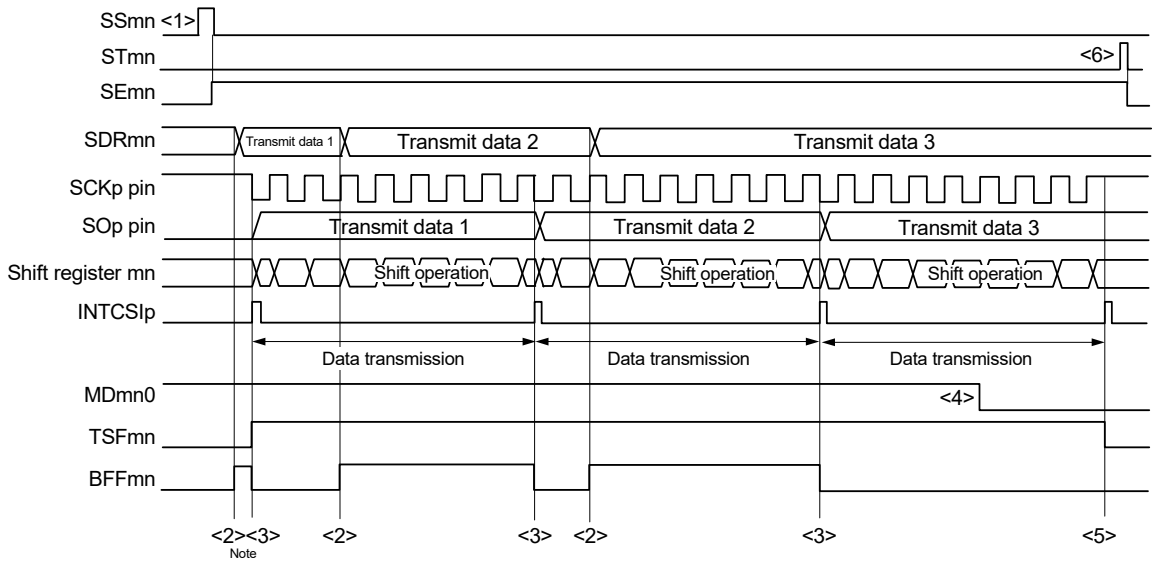

Note If transmit data is written to the SDRmn register while the BFFmn bit of serial status register mn (SSRmn) is 1 (valid data is stored in serial data register mn (SDRmn)), the transmit data is overwritten.

Caution **The MDmn0 bit of serial mode register mn (SMRmn) can be rewritten even during operation. However, rewrite it before transfer of the last bit is started, so that it will be rewritten before the transfer end interrupt of the last transmit data.**

Remark m: Unit number (m = 0, 1), n: Channel number (n = 0 to 3), p: CSI number (p = 00, 01, 10, 11, 20, 21)
mn = 00 to 03, 10, 11

Figure 19 - 35 Flowchart of Master Transmission (in Continuous Transmission Mode)

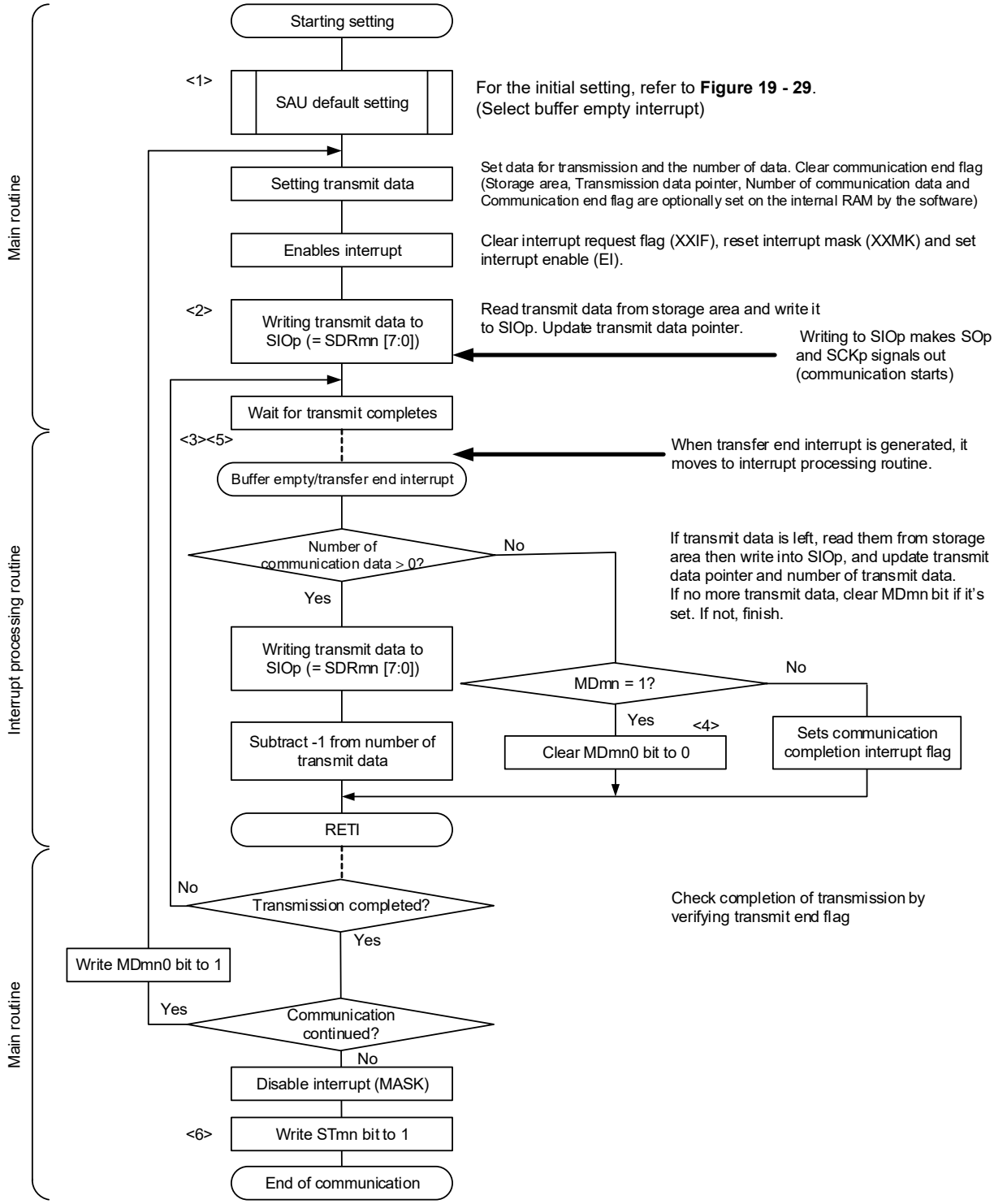

Remark <1> to <6> in the figure correspond to <1> to <6> in Figure 19 - 34 Timing Chart of Master Transmission (in Continuous Transmission Mode) (Type 1: DAPmn = 0, CKPmn = 0).

19.5.2 Master reception

Master reception is that the RL78 microcontroller outputs a transfer clock and receives data from other device.

Simplified SPI	CSI00	CSI01	CSI10	CSI11	CSI20	CSI21
Target channel	Channel 0 of SAU0	Channel 1 of SAU0	Channel 2 of SAU0	Channel 3 of SAU0	Channel 0 of SAU1	Channel 1 of SAU1
Pins used	SCK00, SI00	SCK01, SI01	SCK10, SI10	SCK11, SI11	SCK20, SI20	SCK21, SI21
Interrupt	INTCSI00	INTCSI01	INTCSI10	INTCSI11	INTCSI20	INTCSI21
	Transfer end interrupt (in single-transfer mode) or buffer empty interrupt (in continuous transfer mode) can be selected.					
Error detection flag	Overrun error detection flag (OVFmn) only					
Transfer data length	7 or 8 bits					
Transfer rate[Note]	Max. $f_{CLK}/2$ [Hz] (CSI00 only), $f_{CLK}/4$ [Hz] Min. $f_{CLK}/(2 \times 2^{15} \times 128)$ [Hz] f_{CLK}: System clock frequency					
Data phase	Selectable by the DAPmn bit of the SCRmn register • DAPmn = 0: Data input starts from the start of the operation of the serial clock. • DAPmn = 1: Data input starts half a clock before the start of the serial clock operation.					
Clock phase	Selectable by the CKPmn bit of the SCRmn register • CKPmn = 0: Non-reverse • CKPmn = 1: Reverse					
Data direction	MSB or LSB first					

Note Use this operation within a range that satisfies the conditions above and the peripheral functions characteristics in the electrical specifications (see **CHAPTER 37** or **CHAPTER 38 ELECTRICAL SPECIFICATIONS**).

Remark m: Unit number (m = 0, 1), n: Channel number (n = 0 to 3), p: CSI number (p = 00, 01, 10, 11, 20, 21), mn = 00 to 03, 10, 11

(1) Register setting

Figure 19 - 36 Example of Contents of Registers for Master Reception of simplified SPI (CSI00, CSI01, CSI10, CSI11, CSI20, CSI21)

(a) Serial mode register mn (SMRmn)

	15	14	13	12	11	10	9	8	7	6	5	4	3	2	1	0
SMRmn	CKSmn 0/1	CCSmn 0	0	0	0	0	0	STSmn 0	0	SISmn0 0	1	0	0	MDmn2 0	MDmn1 0	MDmn0 0/1

Operation clock (f_{MCK}) of channel n
0: Prescaler output clock CKm0 set by the SPSm register
1: Prescaler output clock CKm1 set by the SPSm register

Interrupt source of channel n
0: Transfer end interrupt
1: Buffer empty interrupt

(b) Serial communication operation setting register mn (SCRmn)

	15	14	13	12	11	10	9	8	7	6	5	4	3	2	1	0
SCRmn	TXEmn 0	RXEmn 1	DAPmn 0/1	CKPmn 0/1	0	EOCmn 0	PTCmn1 0	PTCmn0 0	DIRmn 0/1	0	SLCmn1 0	SLCmn0 0	0	1	DLSmn1 1Note	DLSmn0 0/1

Selection of the data and clock phase (For details about the setting, see **19.3 Registers Controlling Serial Array Unit**.)

Selection of data transfer sequence
0: Inputs/outputs data with MSB first
1: Inputs/outputs data with LSB first

Setting of data length
0: 7-bit data length
1: 8-bit data length

(c) Serial data register mn (SDRmn) (lower 8 bits: SIOp)

	15	14	13	12	11	10	9	8	7	6	5	4	3	2	1	0
SDRmn	Baud rate setting (Operation clock (f_{MCK}) division setting)							0	Receive data (Write FFH as dummy data.)							

SIOp

(d) Serial output register m (SOm)... Sets only the bits of the target channel.

	15	14	13	12	11	10	9	8	7	6	5	4	3	2	1	0
SOm	0	0	0	0	CKOm3 0/1	CKOm2 0/1	CKOm1 0/1	CKOm0 0/1	0	0	0	0	SOm3 ×	SOm2 ×	SOm1 ×	SOm0 ×

Communication starts when these bits are 1 if the clock phase is non-reversed (the CKPmn bit of the SCRmn = 0). If the clock phase is reversed (CKPmn = 1), communication starts when these bits are 0.

(e) Serial output enable register m (SOEm)... The register that not used in this mode.

	15	14	13	12	11	10	9	8	7	6	5	4	3	2	1	0
SOEm	0	0	0	0	0	0	0	0	0	0	0	0	SOEm3 ×	SOEm2 ×	SOEm1 ×	SOEm0 ×

(f) Serial channel start register m (SSm)... Sets only the bits of the target channel to 1.

	15	14	13	12	11	10	9	8	7	6	5	4	3	2	1	0
SSm	0	0	0	0	0	0	0	0	0	0	0	0	SSm3 0/1	SSm2 0/1	SSm1 0/1	SSm0 0/1

Note Only provided for the SCR00 and SCR01 registers. This bit is fixed to 1 for the other registers.

Remark 1. m: Unit number (m = 0, 1), n: Channel number (n = 0 to 3), p: CSI number (p = 00, 01, 10, 11, 20, 21)
mn = 00 to 03, 10, 11

Remark 2. ■: Setting is fixed in the simplified SPI (CSI) master reception mode,
■: Setting disabled (set to the initial value)
×: Bit that cannot be used in this mode (set to the initial value when not used in any mode)
0/1: Set to 0 or 1 depending on the usage of the user

(2) Operation procedure

Figure 19 - 37 Initial Setting Procedure for Master Reception

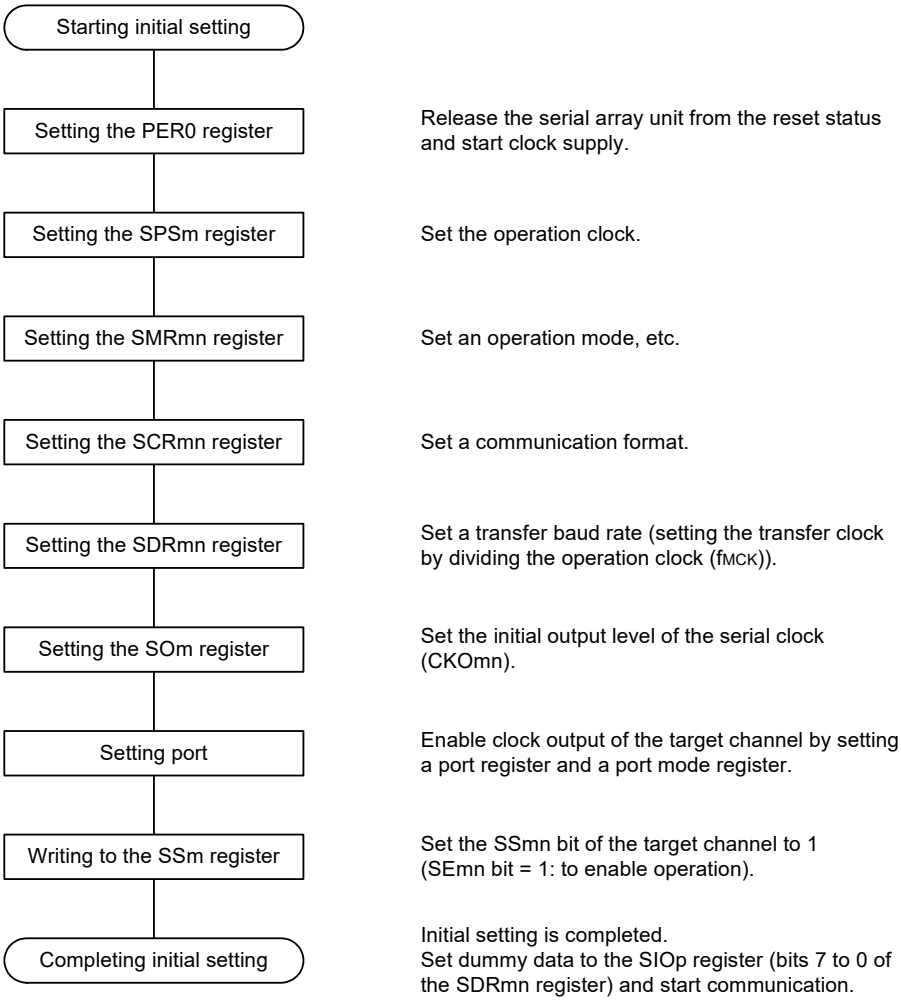

Figure 19 - 38 Procedure for Stopping Master Reception

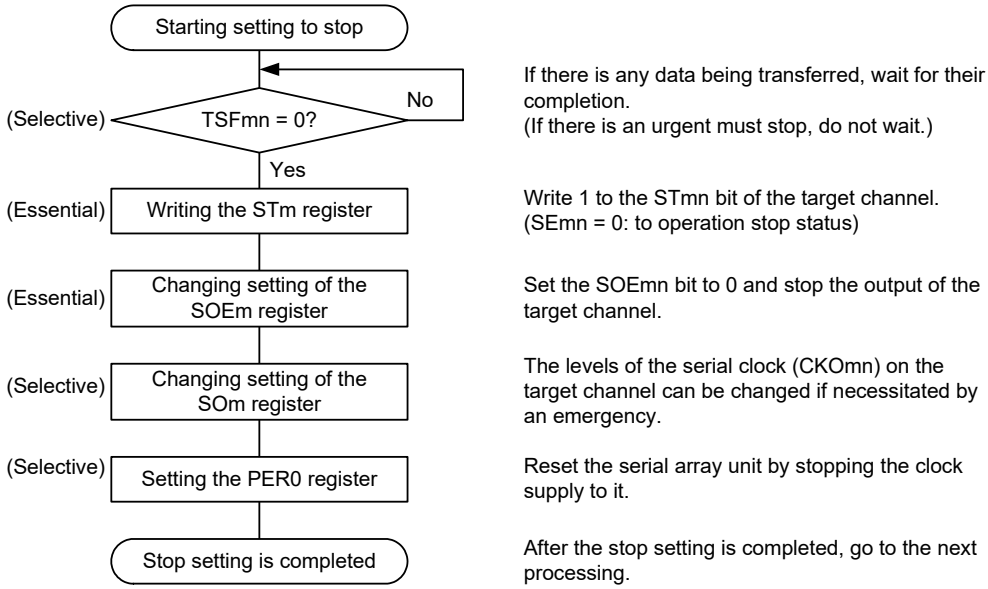

Figure 19 - 39 Procedure for Resuming Master Reception

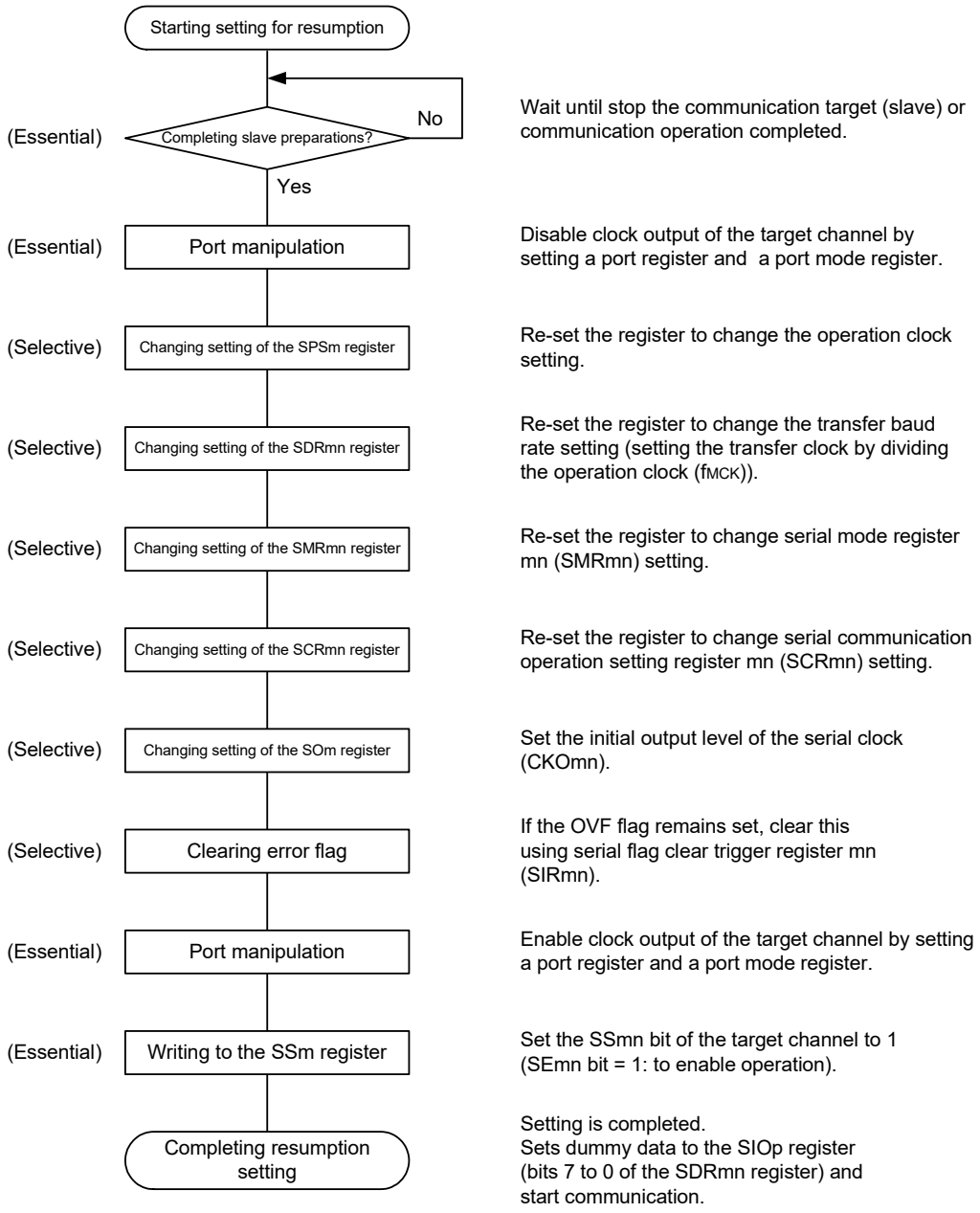

Remark If PER0 is rewritten while stopping the master transmission and the clock supply is stopped, wait until the transmission target (slave) stops or transmission finishes, and then perform initialization instead of restarting the transmission.

(3) Processing flow (in single-reception mode)

Figure 19 - 40 Timing Chart of Master Reception (in Single-Reception Mode)
(Type 1: DAPmn = 0, CKPmn = 0)

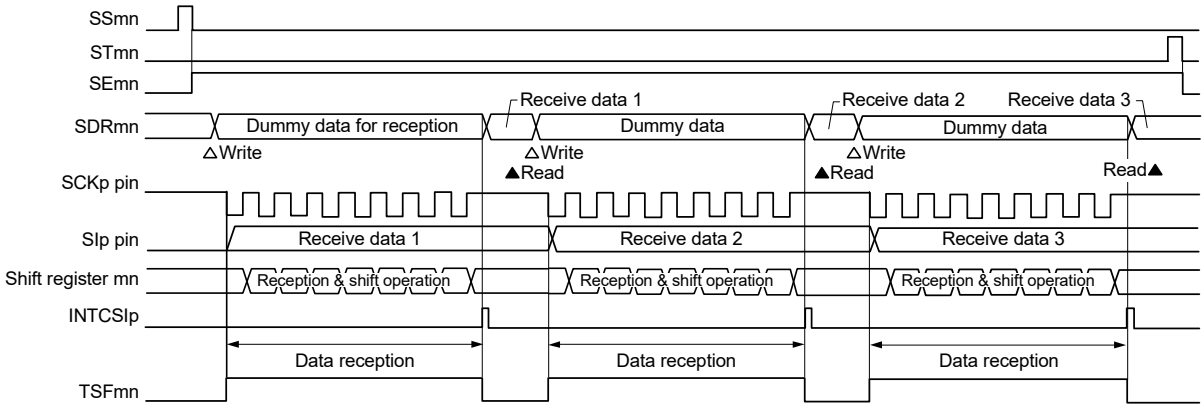

Remark m: Unit number (m = 0, 1), n: Channel number (n = 0 to 3), p: CSI number (p = 00, 01, 10, 11, 20, 21)
mn = 00 to 03, 10, 11

Figure 19 - 41 Flowchart of Master Reception (in Single-Reception Mode)

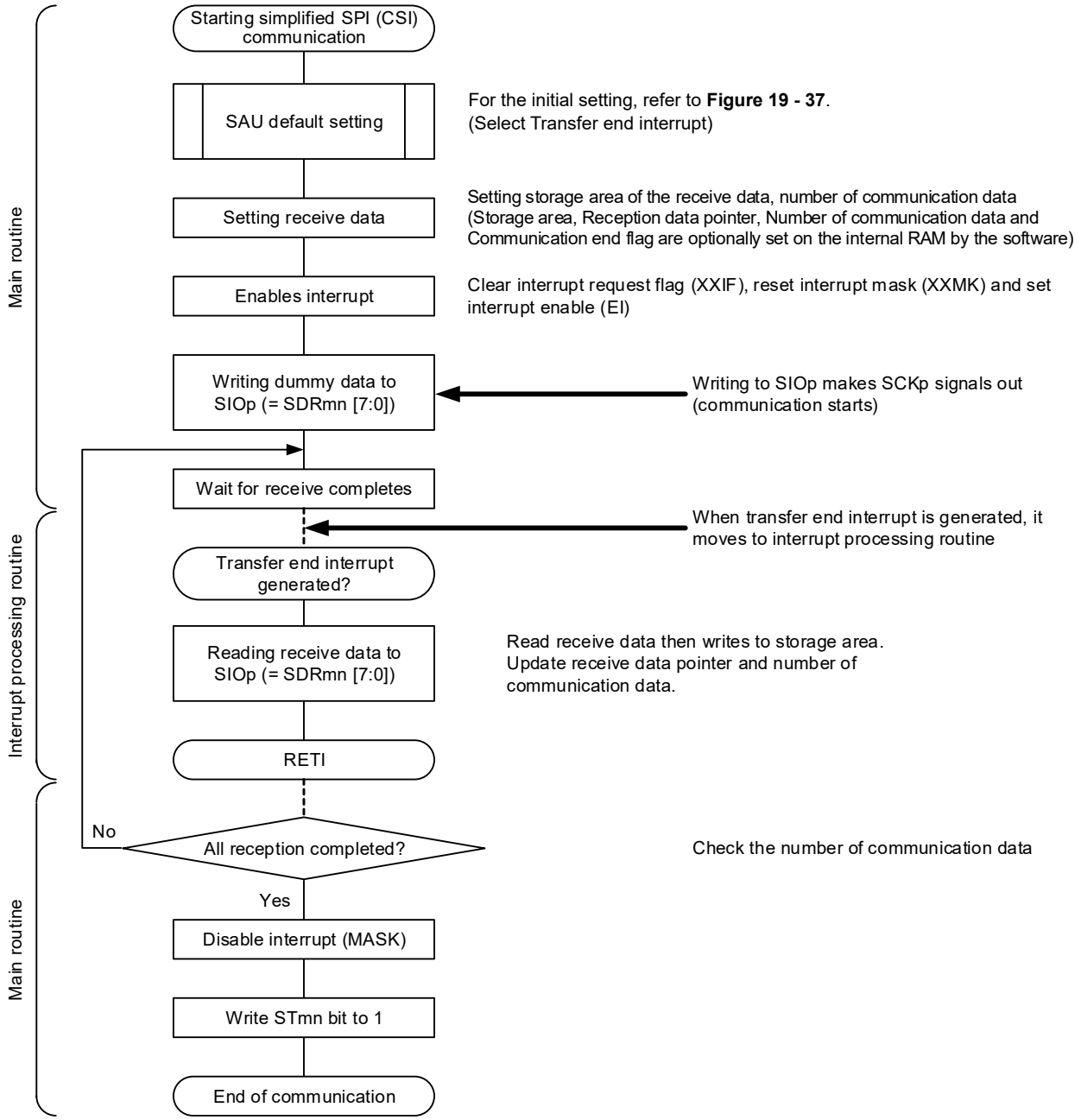

(4) Processing flow (in continuous reception mode)

Figure 19 - 42 Timing Chart of Master Reception (in Continuous Reception Mode)
(Type 1: DAPmn = 0, CKPmn = 0)

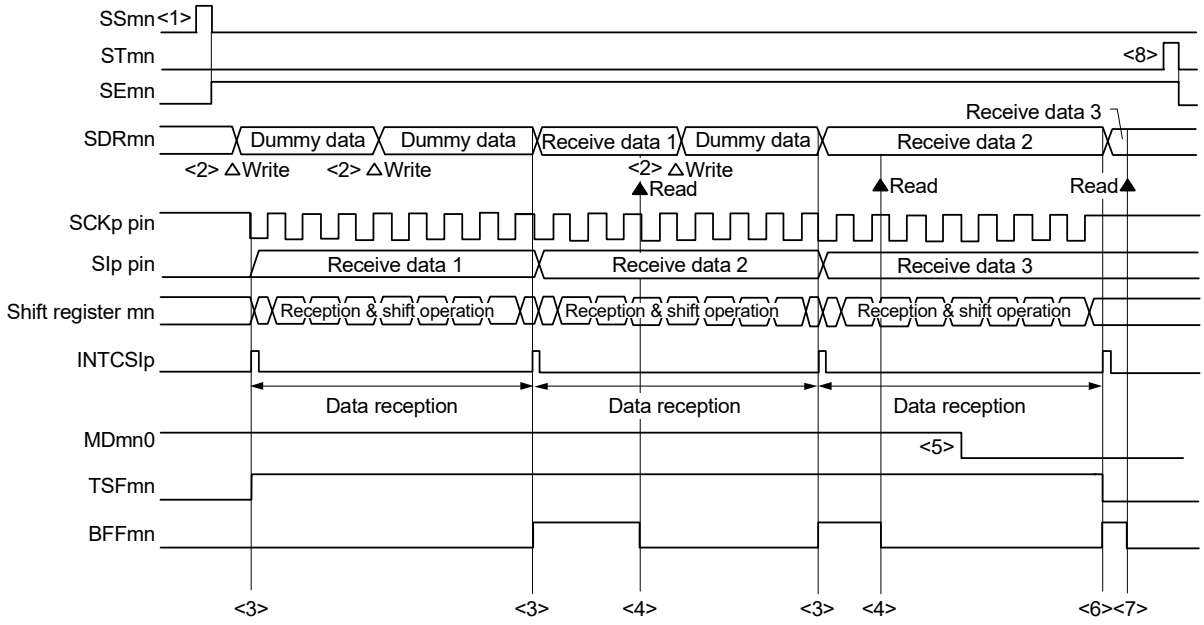

Caution **The MDmn0 bit can be rewritten even during operation.**
However, rewrite it before receive of the last bit is started, so that it has been rewritten before the transfer end interrupt of the last receive data.

Remark 1. <1> to <8> in the figure correspond to <1> to <8> in Figure 19 - 43 Flowchart of Master Reception (in Continuous Reception Mode).

Remark 2. m: Unit number (m = 0, 1), n: Channel number (n = 0 to 3), p: CSI number (p = 00, 01, 10, 11, 20, 21)
mn = 00 to 03, 10, 11

Figure 19 - 43 Flowchart of Master Reception (in Continuous Reception Mode)

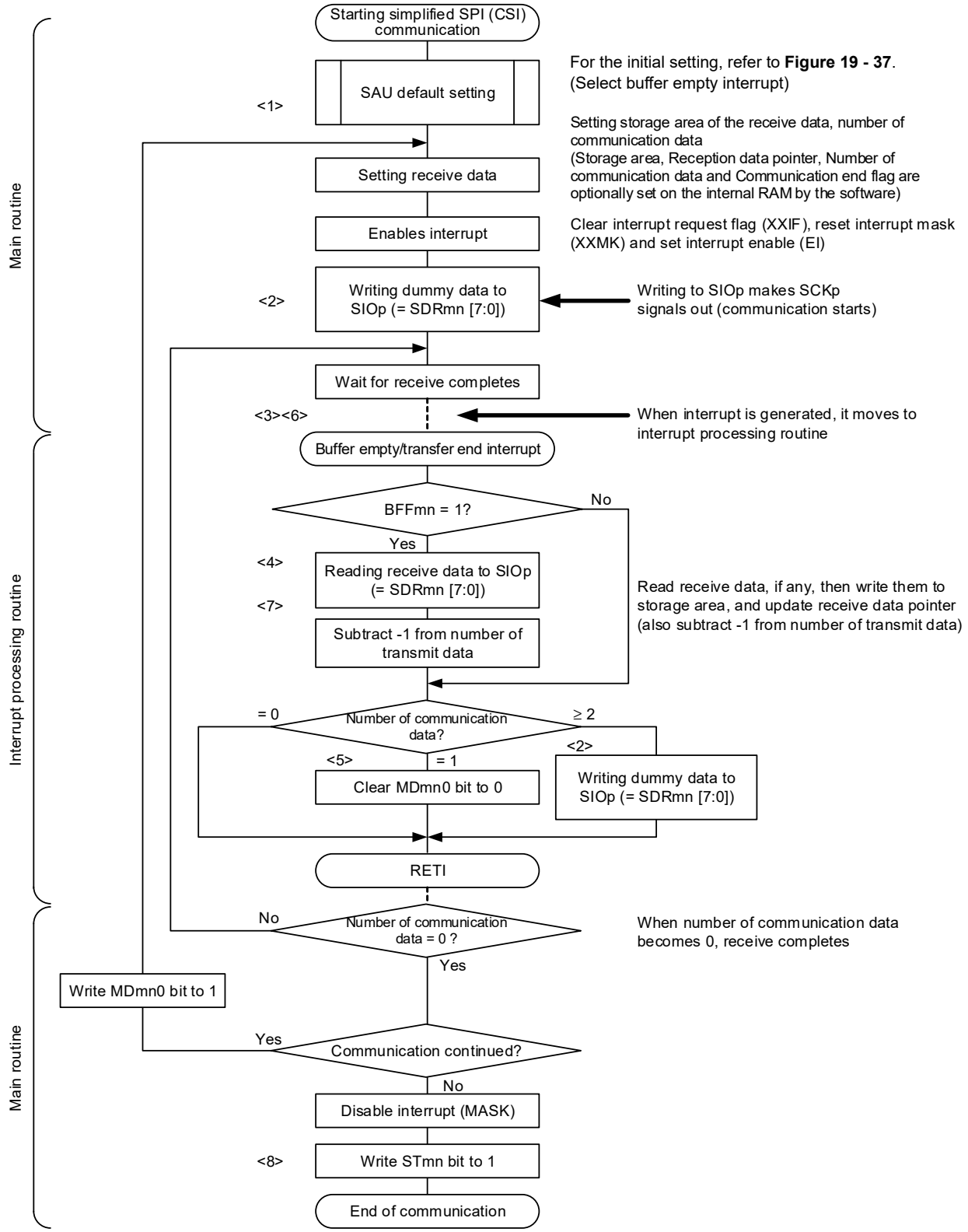

Remark <1> to <8> in the figure correspond to <1> to <8> in Figure 19 - 42 Timing Chart of Master Reception (in Continuous Reception Mode) (Type 1: DAPmn = 0, CKPmn = 0).

19.5.3 Master transmission/reception

Master transmission/reception is that the RL78 microcontroller outputs a transfer clock and transmits/receives data to/from other device.

Simplified SPI	CSI00	CSI01	CSI10	CSI11	CSI20	CSI21
Target channel	Channel 0 of SAU0	Channel 1 of SAU0	Channel 2 of SAU0	Channel 3 of SAU0	Channel 0 of SAU1	Channel 1 of SAU1
Pins used	SCK00, SI00, SO00	SCK01, SI01, SO01	SCK10, SI10, SO10	SCK11, SI11, SO11	SCK20, SI20, SO20	SCK21, SI21, SO21
Interrupt	INTCSI00	INTCSI01	INTCSI10	INTCSI11	INTCSI20	INTCSI21
	Transfer end interrupt (in single-transfer mode) or buffer empty interrupt (in continuous transfer mode) can be selected.					
Error detection flag	Overrun error detection flag (OVFmn) only					
Transfer data length	7 or 8 bits					
Transfer rate[Note]	Max. $f_{CLK}/2$ [Hz] (CSI00 only), $f_{CLK}/4$ [Hz] Min. $f_{CLK}/(2 \times 2^{15} \times 128)$ [Hz] f_{CLK}: System clock frequency					
Data phase	Selectable by the DAPmn bit of the SCRmn register • DAPmn = 0: Data I/O starts at the start of the operation of the serial clock. • DAPmn = 1: Data I/O starts half a clock before the start of the serial clock operation.					
Clock phase	Selectable by the CKPmn bit of the SCRmn register • CKPmn = 0: Non-reverse • CKPmn = 1: Reverse					
Data direction	MSB or LSB first					

Note Use this operation within a range that satisfies the conditions above and the peripheral functions characteristics in the electrical specifications (see **CHAPTER 37** or **CHAPTER 38 ELECTRICAL SPECIFICATIONS**).

Remark m: Unit number (m = 0, 1), n: Channel number (n = 0 to 3), p: CSI number (p = 00, 01, 10, 11, 20, 21)
mn = 00 to 03, 10, 11

(1) Register setting

Figure 19 - 44 Example of Contents of Registers for Master Transmission/Reception of simplified SPI (CSI00, CSI01, CSI10, CSI11, CSI20, CSI21)

(a) Serial mode register mn (SMRmn)

	15	14	13	12	11	10	9	8	7	6	5	4	3	2	1	0
SMRmn	CKSmn 0/1	CCSmn 0	0	0	0	0	0	STSmn 0	0	SISmn0 0	1	0	0	MDmn2 0	MDmn1 0	MDmn0 0/1

Operation clock (f_{MCK}) of channel n
0: Prescaler output clock CKm0 set by the SPSm register
1: Prescaler output clock CKm1 set by the SPSm register

Interrupt source of channel n
0: Transfer end interrupt
1: Buffer empty interrupt

(b) Serial communication operation setting register mn (SCRmn)

	15	14	13	12	11	10	9	8	7	6	5	4	3	2	1	0
SCRmn	TXEmn 1	RXEmn 1	DAPmn 0/1	CKPmn 0/1	0	EOCmn 0	PTCmn1 0	PTCmn0 0	DIRmn 0/1	0	SLCmn1 0	SLCmn0 0	0	1	DLSmn1 1Note	DLSmn0 0/1

Selection of the data and clock phase (For details about the setting, see **19.3 Registers Controlling Serial Array Unit**.)

Selection of data transfer sequence
0: Inputs/outputs data with MSB first
1: Inputs/outputs data with LSB first

Setting of data length
0: 7-bit data length
1: 18-bit data length

(c) Serial data register mn (SDRmn) (lower 8 bits: SIOp)

	15	14	13	12	11	10	9	8	7	6	5	4	3	2	1	0
SDRmn	Baud rate setting (Operation clock (f_{MCK}) division setting)							0	Transmit data setting/receive data register							

SIOp

(d) Serial output register m (SOm)... Sets only the bits of the target channel.

	15	14	13	12	11	10	9	8	7	6	5	4	3	2	1	0
SOm	0	0	0	0	CKOm3 0/1	CKOm2 0/1	CKOm1 0/1	CKOm0 0/1	0	0	0	0	SOm3 0/1	SOm2 0/1	SOm1 0/1	SOm0 0/1

Communication starts when these bits are 1 if the clock phase is non-reversed (the CKPmn bit of the SCRmn = 0). If the clock phase is reversed (CKPmn = 1), communication starts when these bits are 0.

(e) Serial output enable register m (SOEm)... Sets only the bits of the target channel to 1.

	15	14	13	12	11	10	9	8	7	6	5	4	3	2	1	0
SOEm	0	0	0	0	0	0	0	0	0	0	0	0	SOEm3 0/1	SOEm2 0/1	SOEm1 0/1	SOEm0 0/1

(f) Serial channel start register m (SSm)... Sets only the bits of the target channel to 1.

	15	14	13	12	11	10	9	8	7	6	5	4	3	2	1	0
SSm	0	0	0	0	0	0	0	0	0	0	0	0	SSm3 0/1	SSm2 0/1	SSm1 0/1	SSm0 0/1

Note Only provided for the SCR00 and SCR01 registers. This bit is fixed to 1 for the other registers.

Remark 1. m: Unit number (m = 0, 1), n: Channel number (n = 0 to 3), p: CSI number (p = 00, 01, 10, 11, 20, 21)
mn = 00 to 03, 10, 11

Remark 2. ■: Setting is fixed in the simplified SPI (CSI) master transmission/reception mode,
■: Setting disabled (set to the initial value)
0/1: Set to 0 or 1 depending on the usage of the user

(2) Operation procedure

Figure 19 - 45 Initial Setting Procedure for Master Transmission/Reception

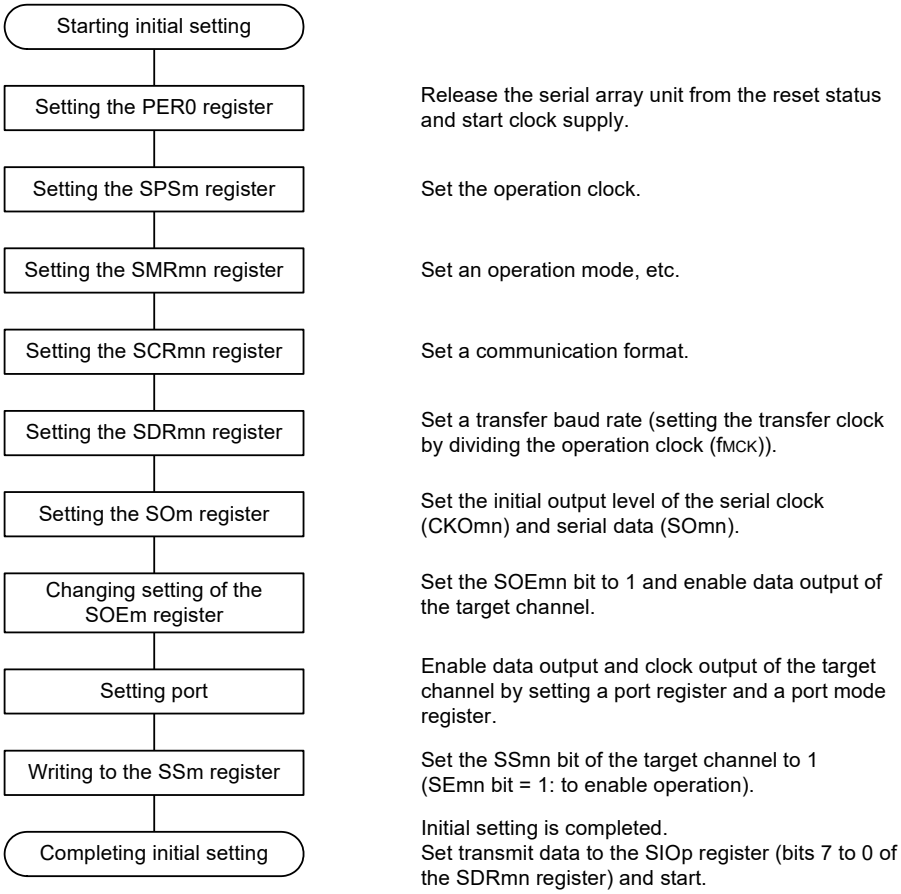

Figure 19 - 46 Procedure for Stopping Master Transmission/Reception

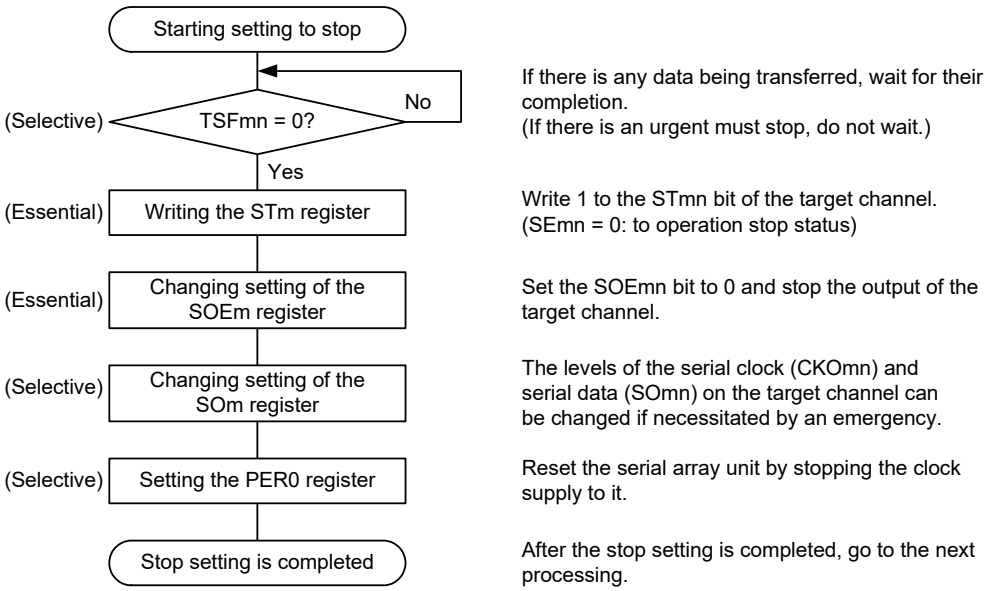

Figure 19 - 47 Procedure for Resuming Master Transmission/Reception

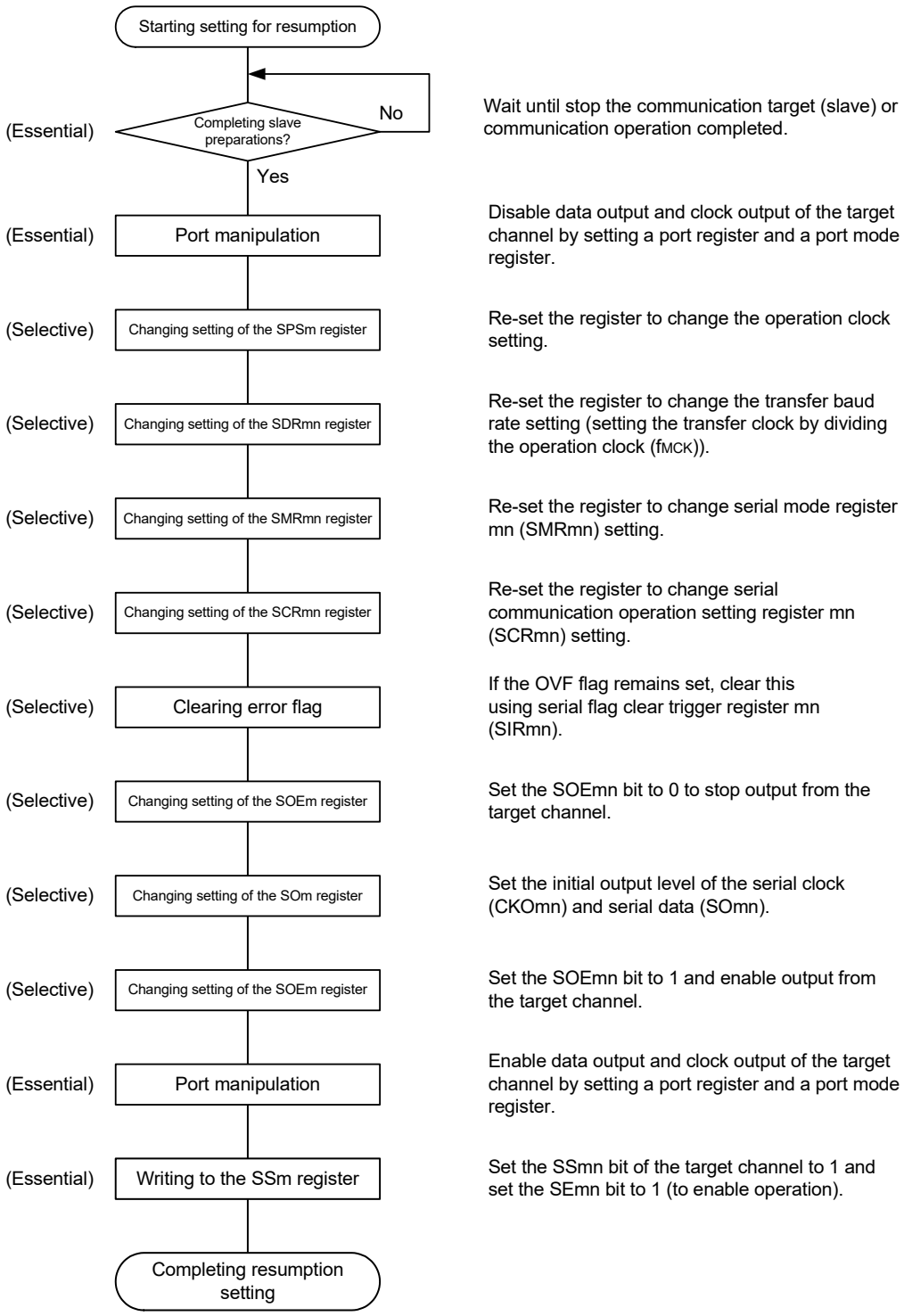

(3) Processing flow (in single-transmission/reception mode)

Figure 19 - 48 Timing Chart of Master Transmission/Reception (in Single-Transmission/Reception Mode) (Type 1: DAPmn = 0, CKPmn = 0)

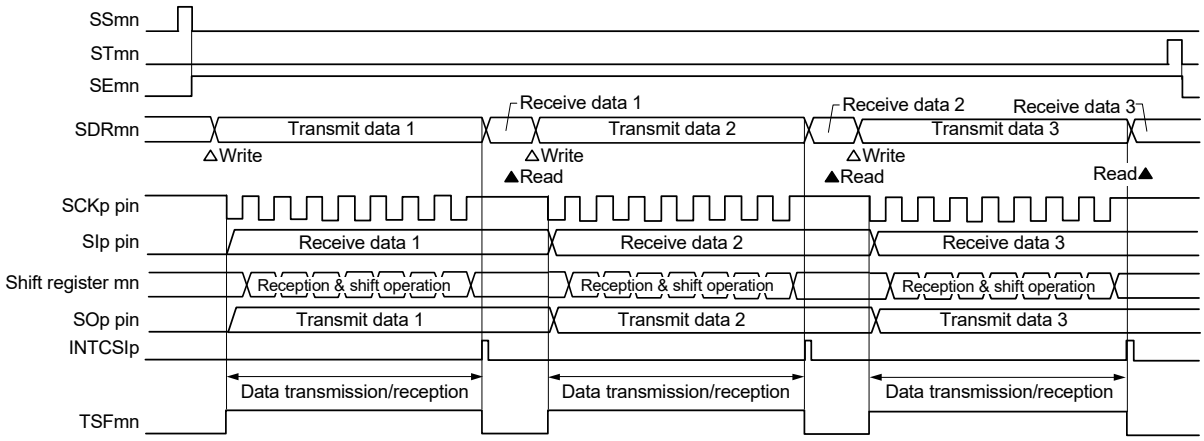

Remark m: Unit number (m = 0, 1), n: Channel number (n = 0 to 3), p: CSI number (p = 00, 01, 10, 11, 20, 21)
mn = 00 to 03, 10, 11

Figure 19 - 49 Flowchart of Master Transmission/Reception (in Single- Transmission/Reception Mode)

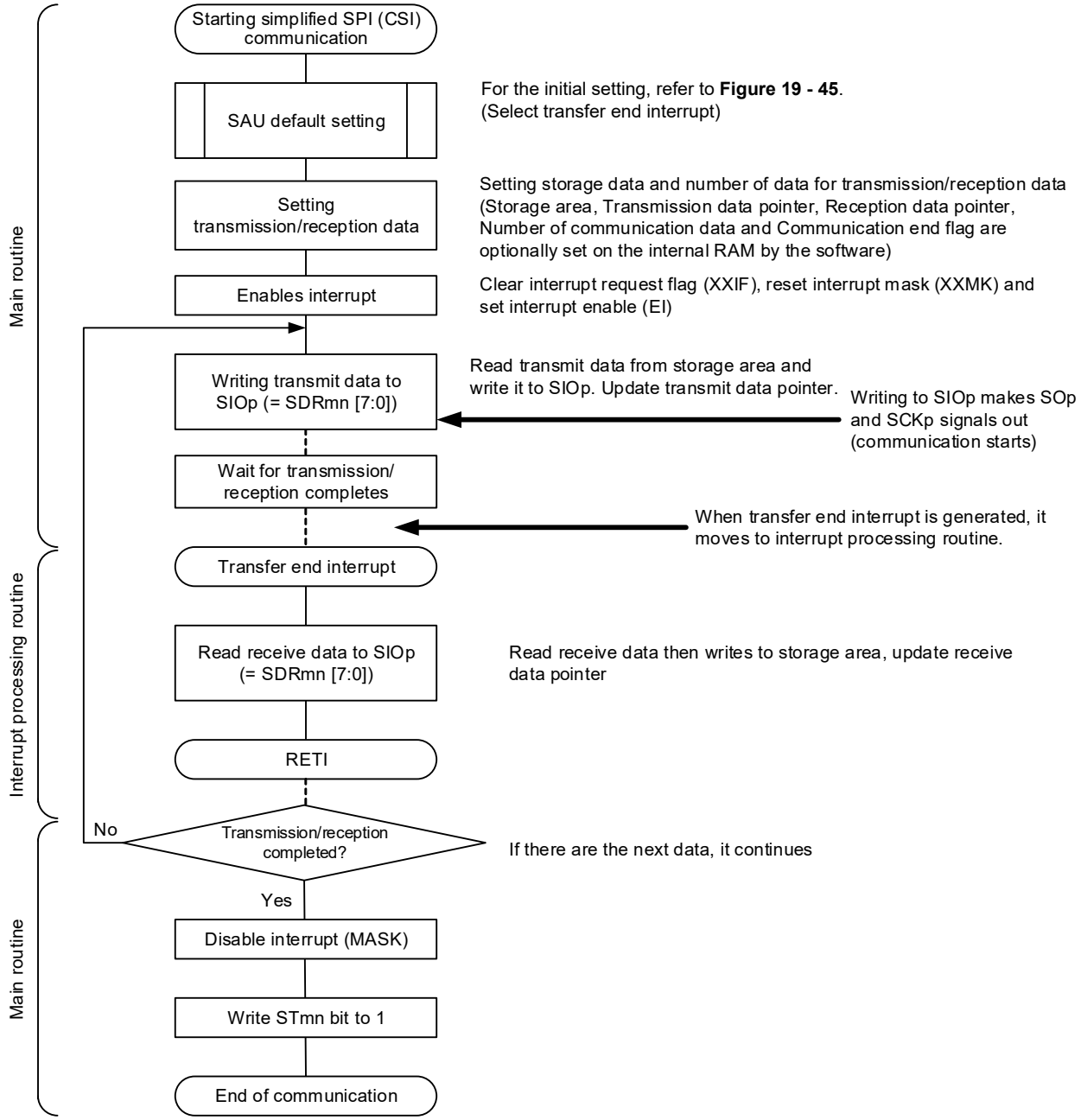

(4) Processing flow (in continuous transmission/reception mode)

Figure 19 - 50 Timing Chart of Master Transmission/Reception (in Continuous Transmission/Reception Mode) (Type 1: DAPmn = 0, CKPmn = 0)

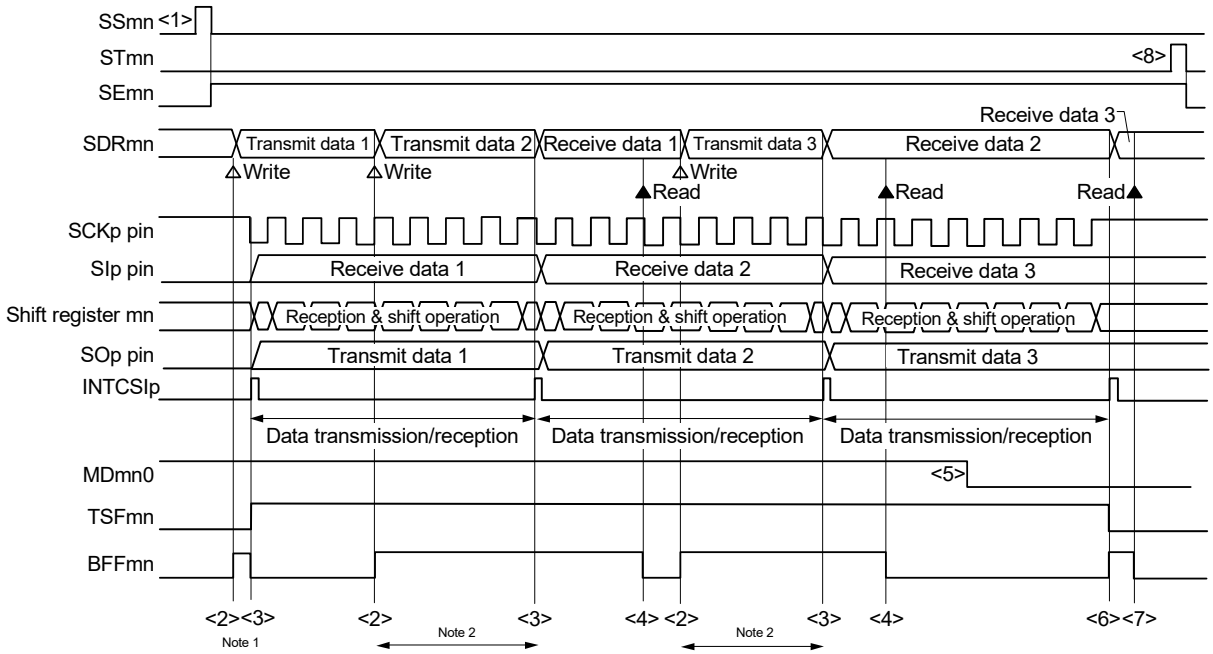

Note 1. If transmit data is written to the SDRmn register while the BFFmn bit of serial status register mn (SSRmn) is 1 (valid data is stored in serial data register mn (SDRmn)), the transmit data is overwritten.

Note 2. The transmit data can be read by reading the SDRmn register during this period. At this time, the transfer operation is not affected.

Caution **The MDmn0 bit of serial mode register mn (SMRmn) can be rewritten even during operation. However, rewrite it before transfer of the last bit is started, so that it has been rewritten before the transfer end interrupt of the last transmit data.**

Remark 1. <1> to <8> in the figure correspond to <1> to <8> in Figure 19 - 51 Flowchart of Master Transmission/Reception (in Continuous Transmission/Reception Mode).

Remark 2. m: Unit number (m = 0, 1), n: Channel number (n = 0 to 3), p: CSI number (p = 00, 01, 10, 11, 20, 21)
mn = 00 to 03, 10, 11

Figure 19 - 51 Flowchart of Master Transmission/Reception (in Continuous Transmission/Reception Mode)

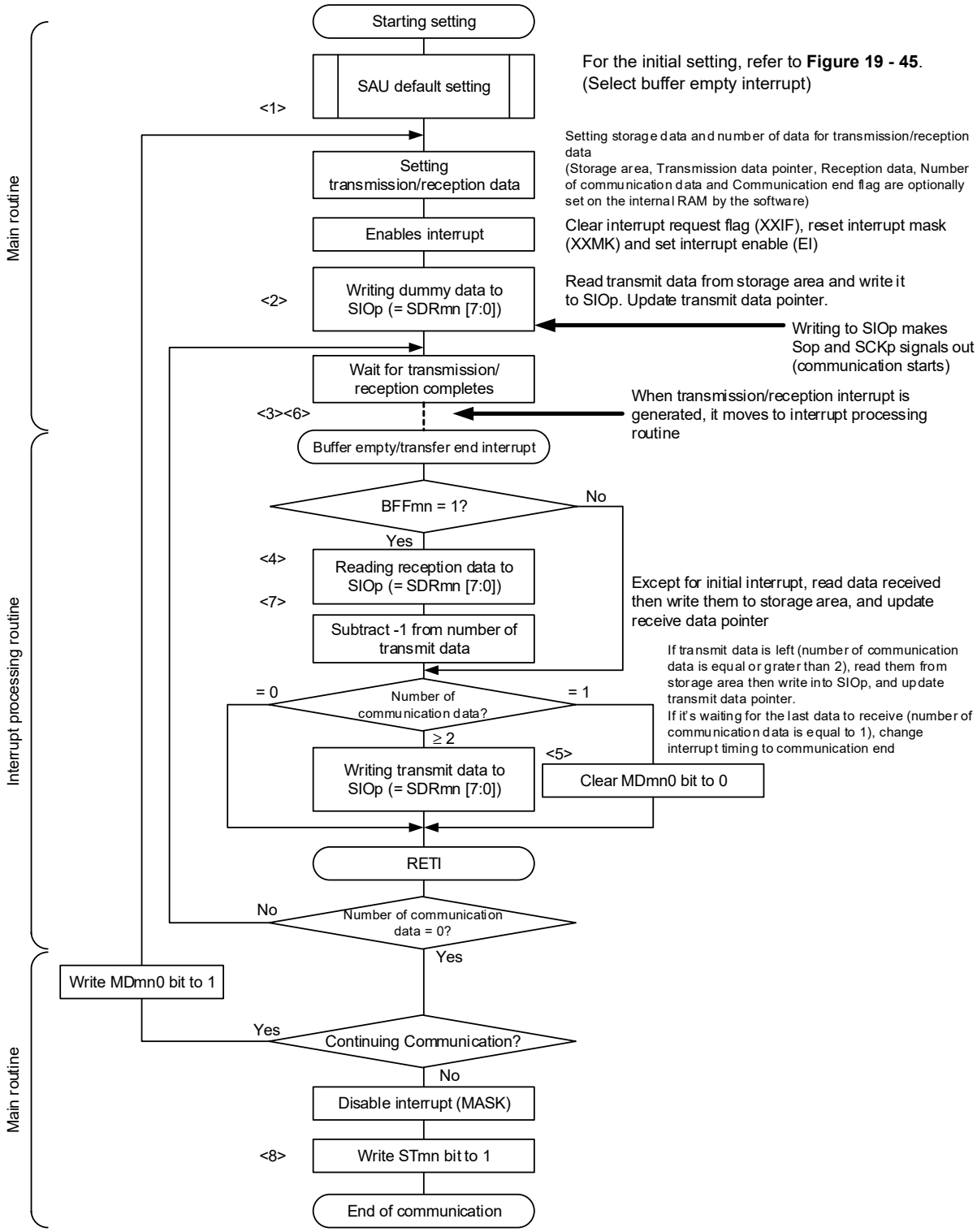

Remark <1> to <8> in the figure correspond to <1> to <8> in Figure 19 - 50 Timing Chart of Master Transmission/Reception (in Continuous Transmission/Reception Mode) (Type 1: DAPmn = 0, CKPmn = 0).

19.5.4 Slave transmission

Slave transmission is that the RL78 microcontroller transmits data to another device in the state of a transfer clock being input from another device.

Simplified SPI	CSI00	CSI01	CSI10	CSI11	CSI20	CSI21
Target channel	Channel 0 of SAU0	Channel 1 of SAU0	Channel 2 of SAU0	Channel 3 of SAU0	Channel 0 of SAU1	Channel 1 of SAU1
Pins used	SCK00, SO00	SCK01, SO01	SCK10, SO10	SCK11, SO11	SCK20, SO20	SCK21, SO21
Interrupt	INTCSI00	INTCSI01	INTCSI10	INTCSI11	INTCSI20	INTCSI21
	Transfer end interrupt (in single-transfer mode) or buffer empty interrupt (in continuous transfer mode) can be selected.					
Error detection flag	Overrun error detection flag (OVFmn) only					
Transfer data length	7 or 8 bits					
Transfer rate	Max. f_{MCK}/6 [Hz]Notes 1, 2.					
Data phase	Selectable by the DAPmn bit of the SCRmn register • DAPmn = 0: Data output starts from the start of the operation of the serial clock. • DAPmn = 1: Data output starts half a clock before the start of the serial clock operation.					
Clock phase	Selectable by the CKPmn bit of the SCRmn register • CKPmn = 0: Non-reverse • CKPmn = 1: Reverse					
Data direction	MSB or LSB first					

Note 1. Because the external serial clock input to the SCK00, SCK01, SCK10, SCK11, SCK20, and SCK21 pins is sampled internally and used, the fastest transfer rate is f_{MCK}/6 [Hz].

Note 2. Use this operation within a range that satisfies the conditions above and the peripheral functions characteristics in the electrical specifications (see **CHAPTER 37** or **CHAPTER 38 ELECTRICAL SPECIFICATIONS**).

Remark 1. f_{MCK}: Operation clock frequency of target channel

Remark 2. m: Unit number (m = 0, 1), n: Channel number (n = 0 to 3), mn = 00 to 03, 10, 11

(1) Register setting

Figure 19 - 52 Example of Contents of Registers for Slave Transmission of simplified SPI (CSI00, CSI01, CSI10, CSI11, CSI20, CSI21)

(a) Serial mode register mn (SMRmn)

	15	14	13	12	11	10	9	8	7	6	5	4	3	2	1	0
SMRmn	CKSmn 0/1	CCSmn 1	0	0	0	0	0	STSmn 0	0	SISmn0 0	1	0	0	MDmn2 0	MDmn1 0	MDmn0 0/1

Operation clock (f_{MCK}) of channel n
0: Prescaler output clock CKm0 set by the SPSm register
1: Prescaler output clock CKm1 set by the SPSm register

Interrupt source of channel n
0: Transfer end interrupt
1: Buffer empty interrupt

(b) Serial communication operation setting register mn (SCRmn)

	15	14	13	12	11	10	9	8	7	6	5	4	3	2	1	0
SCRmn	TXEmn 1	RXEmn 0	DAPmn 0/1	CKPmn 0/1	0	EOCmn 0	PTCmn1 0	PTCmn0 0	DIRmn 0/1	0	SLCmn1 0	SLCmn0 0	0	1	DLSmn1 1Note	DLSmn0 0/1

Selection of the data and clock phase (For details about the setting, see **19.3 Registers Controlling Serial Array Unit**.)

Selection of data transfer sequence
0: Inputs/outputs data with MSB first
1: Inputs/outputs data with LSB first

Setting of data length
0: 7-bit data length
1: 8-bit data length

(c) Serial data register mn (SDRmn) (lower 8 bits: SIOp)

	15	14	13	12	11	10	9	8	7	6	5	4	3	2	1	0
SDRmn	0000000 Baud rate setting							0	Transmit data setting							

SIOp

(d) Serial output register m (SOm)... Sets only the bits of the target channel.

	15	14	13	12	11	10	9	8	7	6	5	4	3	2	1	0
SOm	0	0	0	0	CKOm3 ×	CKOm2 ×	CKOm1 ×	CKOm0 ×	0	0	0	0	SOm3 0/1	SOm2 0/1	SOm1 0/1	SOm0 0/1

(e) Serial output enable register m (SOEm)... Sets only the bits of the target channel to 1.

	15	14	13	12	11	10	9	8	7	6	5	4	3	2	1	0
SOEm	0	0	0	0	0	0	0	0	0	0	0	0	SOEm3 0/1	SOEm2 0/1	SOEm1 0/1	SOEm0 0/1

(f) Serial channel start register m (SSm)... Sets only the bits of the target channel to 1.

	15	14	13	12	11	10	9	8	7	6	5	4	3	2	1	0
SSm	0	0	0	0	0	0	0	0	0	0	0	0	SSm3 0/1	SSm2 0/1	SSm1 0/1	SSm0 0/1

Note Only provided for the SCR00 and SCR01 registers. This bit is fixed to 1 for the other registers.

Remark 1. m: Unit number (m = 0, 1), n: Channel number (n = 0 to 3), p: CSI number (p = 00, 01, 10, 11, 20, 21)
mn = 00 to 03, 10, 11

Remark 2. ■: Setting is fixed in the simplified SPI (CSI) slave transmission mode,
■: Setting disabled (set to the initial value)
×: Bit that cannot be used in this mode (set to the initial value when not used in any mode)
0/1: Set to 0 or 1 depending on the usage of the user

(2) Operation procedure

Figure 19 - 53 Initial Setting Procedure for Slave Transmission

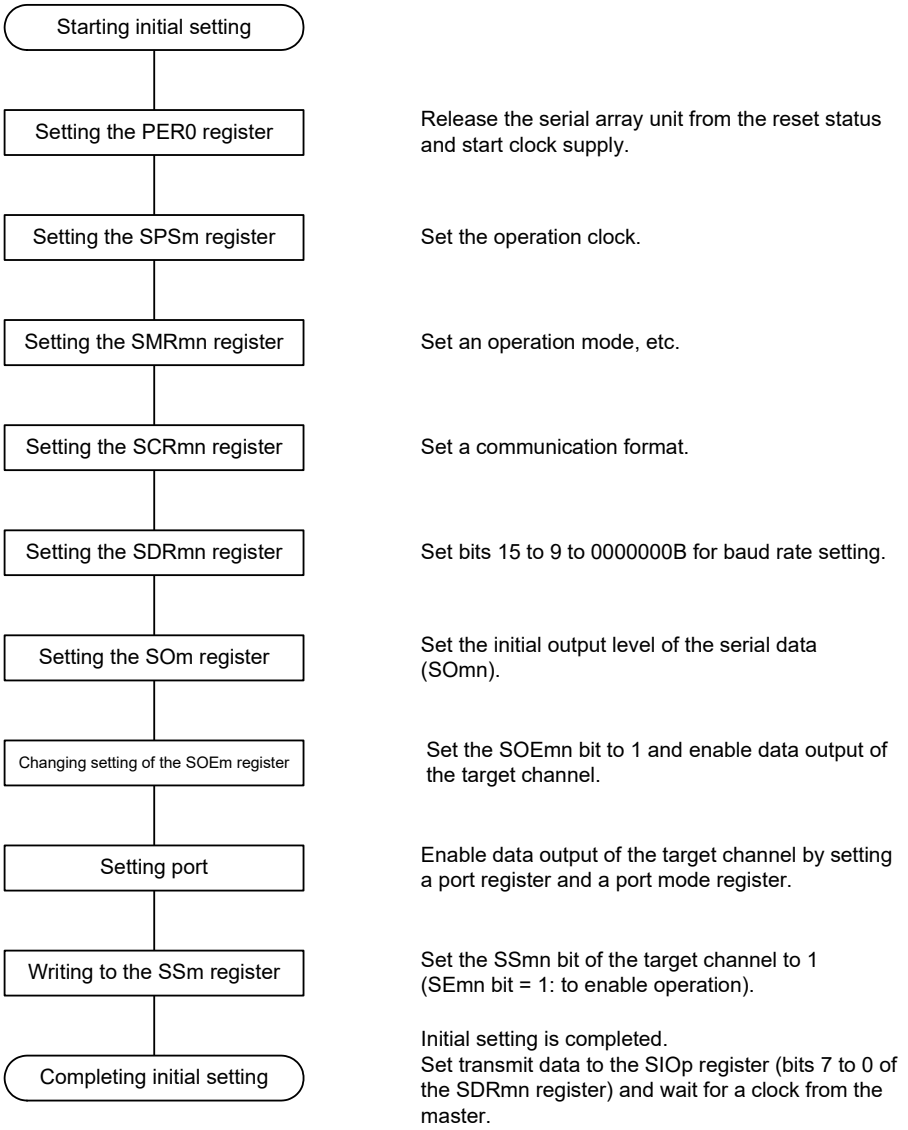

Figure 19 - 54 Procedure for Stopping Slave Transmission

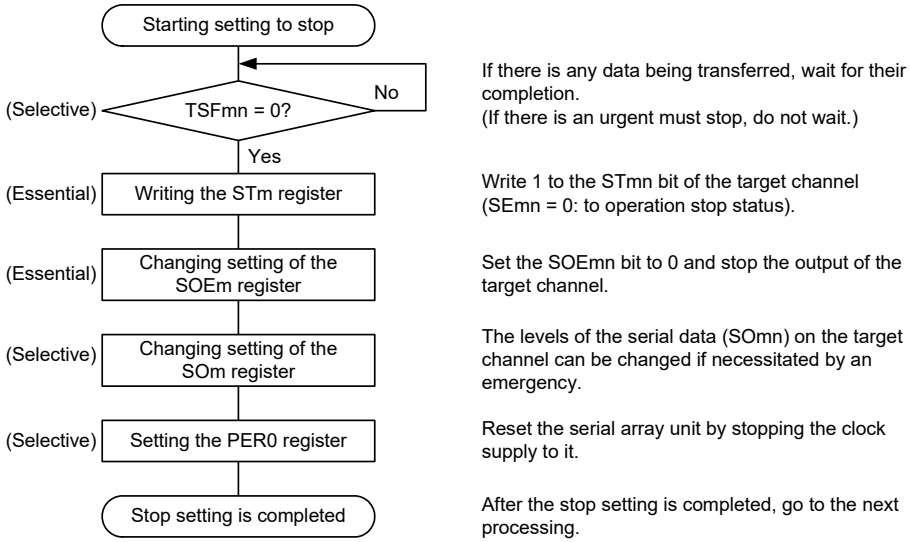

Figure 19 - 55 Procedure for Resuming Slave Transmission

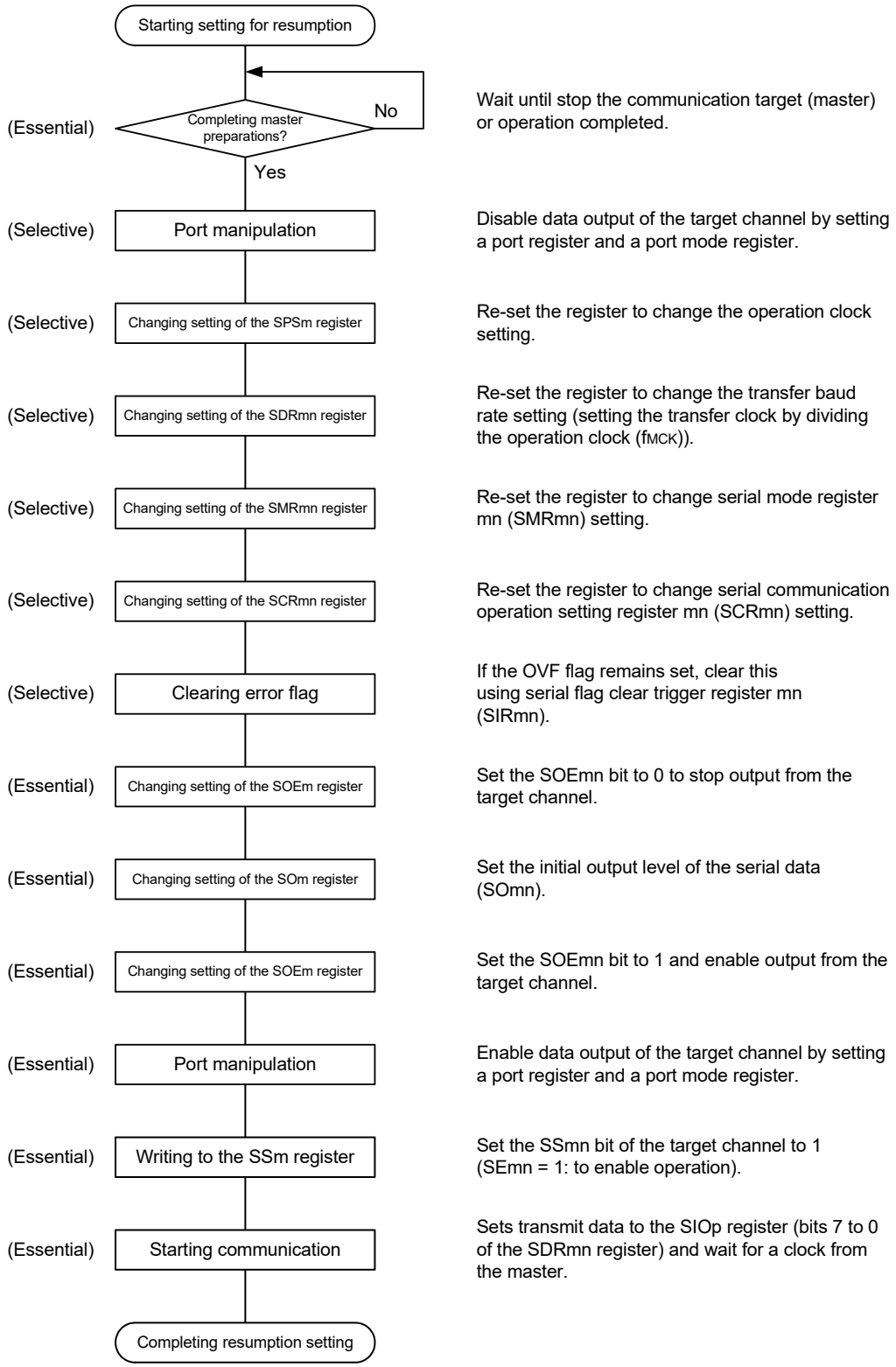

Remark If PER0 is rewritten while stopping the master transmission and the clock supply is stopped, wait until the transmission target (master) stops or transmission finishes, and then perform initialization instead of restarting the transmission.

(3) Processing flow (in single-transmission mode)

Figure 19 - 56 Timing Chart of Slave Transmission (in Single-Transmission Mode)
(Type 1: DAPmn = 0, CKPmn = 0)

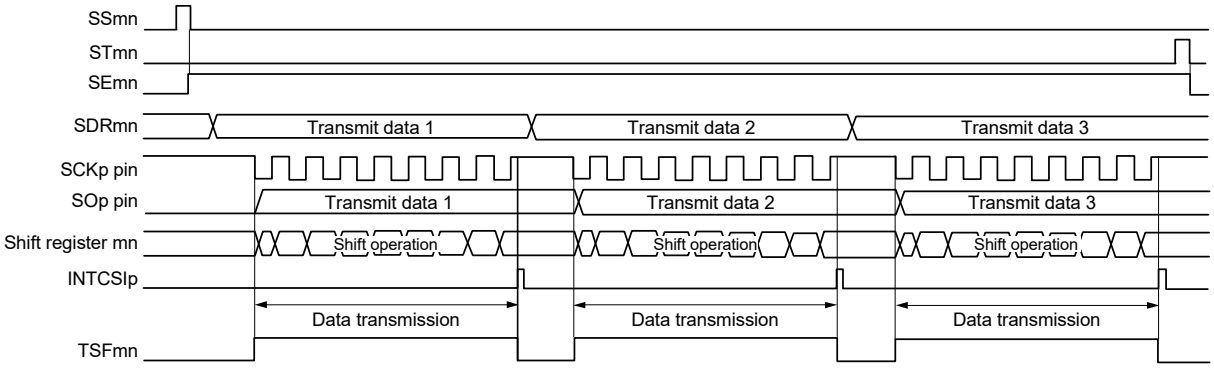

Remark m: Unit number (m = 0, 1), n: Channel number (n = 0 to 3), p: CSI number (p = 00, 01, 10, 11, 20, 21)
mn = 00 to 03, 10, 11

Figure 19 - 57 Flowchart of Slave Transmission (in Single-Transmission Mode)

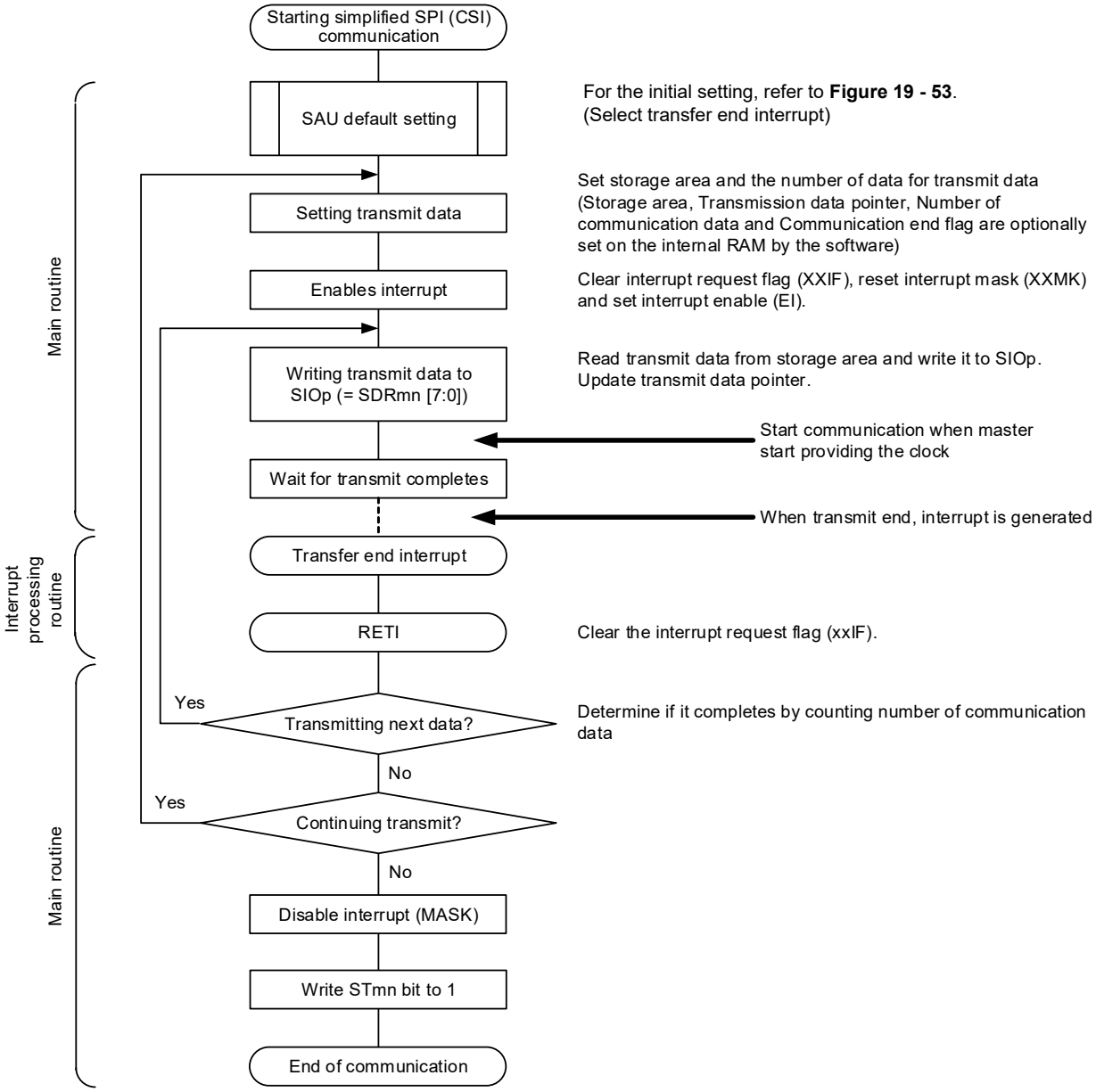

(4) Processing flow (in continuous transmission mode)

Figure 19 - 58 Timing Chart of Slave Transmission (in Continuous Transmission Mode)
(Type 1: DAPmn = 0, CKPmn = 0)

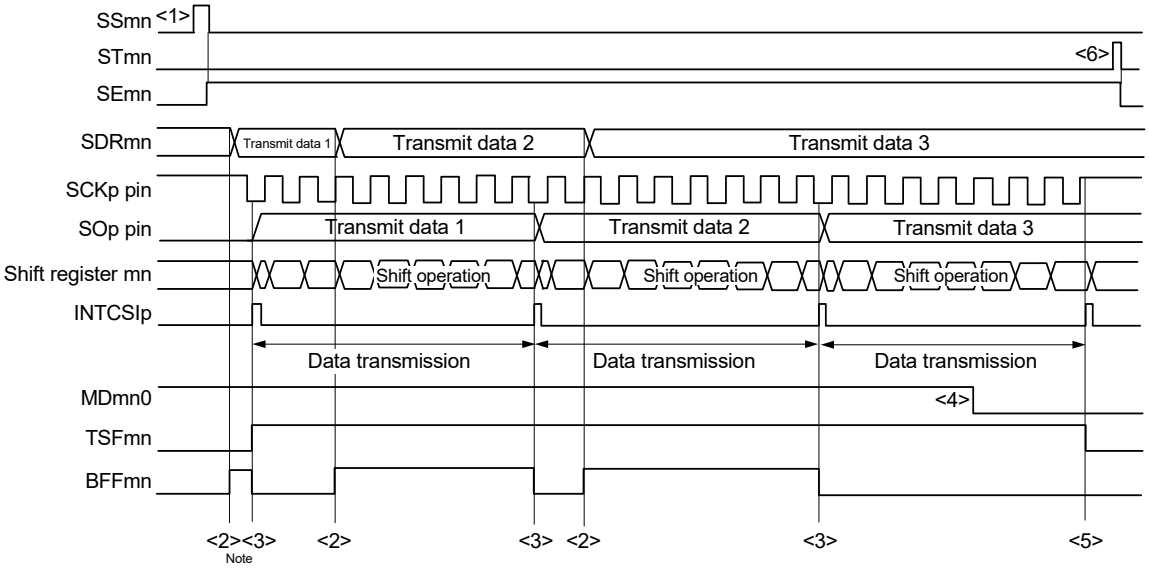

Note If transmit data is written to the SDRmn register while the BFFmn bit of serial status register mn (SSRmn) is 1 (valid data is stored in serial data register mn (SDRmn)), the transmit data is overwritten.

Caution **The MDmn0 bit of serial mode register mn (SMRmn) can be rewritten even during operation. However, rewrite it before transfer of the last bit is started.**

Remark m: Unit number (m = 0, 1), n: Channel number (n = 0 to 3), p: CSI number (p = 00, 01, 10, 11, 20, 21)
mn = 00 to 03, 10, 11

Figure 19 - 59 Flowchart of Slave Transmission (in Continuous Transmission Mode)

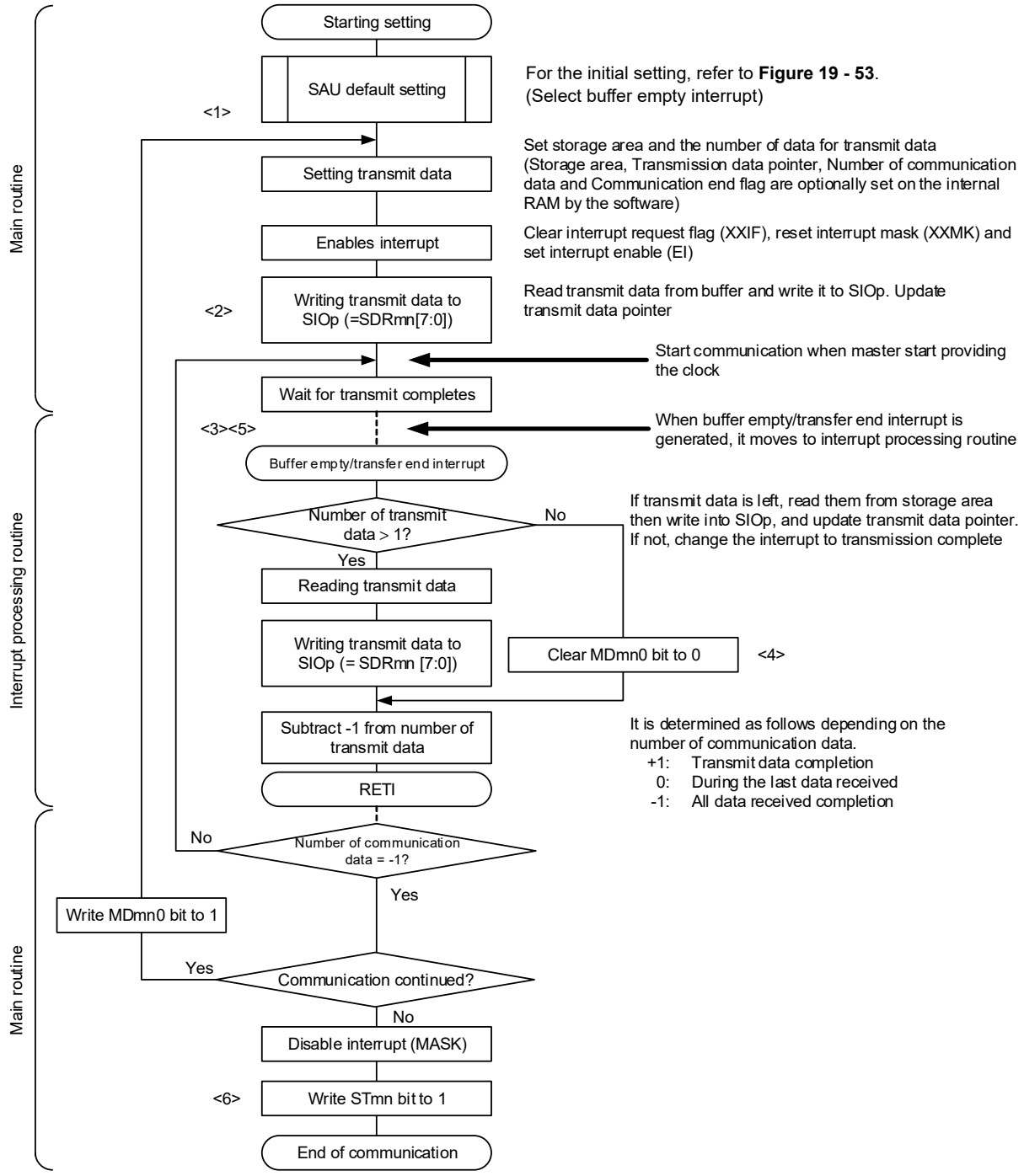

Remark <1> to <6> in the figure correspond to <1> to <6> in Figure 19 - 58 Timing Chart of Slave Transmission (in Continuous Transmission Mode) (Type 1: DAPmn = 0, CKPmn = 0).

19.5.5 Slave reception

Slave reception is that the RL78 microcontroller receives data from another device in the state of a transfer clock being input from another device.

Simplified SPI	CSI00	CSI01	CSI10	CSI11	CSI20	CSI21
Target channel	Channel 0 of SAU0	Channel 1 of SAU0	Channel 2 of SAU0	Channel 3 of SAU0	Channel 0 of SAU1	Channel 1 of SAU1
Pins used	SCK00, SI00	SCK01, SI01	SCK10, SI10	SCK11, SI11	SCK20, SI20	SCK21, SI21
Interrupt	INTCSI00	INTCSI01	INTCSI10	INTCSI11	INTCSI20	INTCSI21
	Transfer end interrupt only (Setting the buffer empty interrupt is prohibited.)					
Error detection flag	Overrun error detection flag (OVFmn) only					
Transfer data length	7 or 8 bits					
Transfer rate	Max. $f_{MCK}/6$ [Hz]Notes 1, 2					
Data phase	Selectable by the DAPmn bit of the SCRmn register • DAPmn = 0: Data input starts from the start of the operation of the serial clock. • DAPmn = 1: Data input starts half a clock before the start of the serial clock operation.					
Clock phase	Selectable by the CKPmn bit of the SCRmn register • CKPmn = 0: Non-reverse • CKPmn = 1: Reverse					
Data direction	MSB or LSB first					

Note 1. Because the external serial clock input to the SCK00, SCK01, SCK10, SCK11, SCK20, and SCK21 pins is sampled internally and used, the fastest transfer rate is $f_{MCK}/6$ [Hz].

Note 2. Use this operation within a range that satisfies the conditions above and the peripheral functions characteristics in the electrical specifications (see **CHAPTER 37** or **CHAPTER 38 ELECTRICAL SPECIFICATIONS**).

Remark 1. f_{MCK}: Operation clock frequency of target channel

Remark 2. m: Unit number (m = 0, 1), n: Channel number (n = 0 to 3), mn = 00 to 03, 10, 11

(1) Register setting

Figure 19 - 60 Example of Contents of Registers for Slave Reception of simplified SPI (CSI00, CSI01, CSI10, CSI11, CSI20, CSI21)

(a) Serial mode register mn (SMRmn)

	15	14	13	12	11	10	9	8	7	6	5	4	3	2	1	0
SMRmn	CKSmn 0/1	CCSmn 1	0	0	0	0	0	STSmn 0	0	SISmn0 0	1	0	0	MDmn2 0	MDmn1 0	MDmn0 0

Operation clock (f_{MCK}) of channel n
0: Prescaler output clock CKm0 set by the SPSm register
1: Prescaler output clock CKm1 set by the SPSm register

Interrupt source of channel n
0: Transfer end interrupt

(b) Serial communication operation setting register mn (SCRmn)

	15	14	13	12	11	10	9	8	7	6	5	4	3	2	1	0
SCRmn	TXEmn 0	RXEmn 1	DAPmn 0/1	CKPmn 0/1	0	EOCmn 0	PTCmn1 0	PTCmn0 0	DIRmn 0/1	0	SLCmn1 0	SLCmn0 0	0	1	DLSmn1 1Note	DLSmn0 0/1

Selection of the data and clock phase (For details about the setting, see **19.3 Registers Controlling Serial Array Unit**.)

Selection of data transfer sequence
0: Inputs/outputs data with MSB first
1: Inputs/outputs data with LSB first

Setting of data length
0: 7-bit data length
1: 8-bit data length

(c) Serial data register mn (SDRmn) (lower 8 bits: SIOp)

	15	14	13	12	11	10	9	8	7	6	5	4	3	2	1	0
SDRmn	0000000 Baud rate setting							0	Receive data							

SIOp

(d) Serial output register m (SOm)... The Register that not used in this mode.

	15	14	13	12	11	10	9	8	7	6	5	4	3	2	1	0
SOm	0	0	0	0	CKOm3 ×	CKOm2 ×	CKOm1 ×	CKOm0 ×	0	0	0	0	SOm3 ×	SOm2 ×	SOm1 ×	SOm0 ×

(e) Serial output enable register m (SOEm)... The Register that not used in this mode.

	15	14	13	12	11	10	9	8	7	6	5	4	3	2	1	0
SOEm	0	0	0	0	0	0	0	0	0	0	0	0	SOEm3 ×	SOEm2 ×	SOEm1 ×	SOEm0 ×

(f) Serial channel start register m (SSm)... Sets only the bits of the target channel to 1.

	15	14	13	12	11	10	9	8	7	6	5	4	3	2	1	0
SSm	0	0	0	0	0	0	0	0	0	0	0	0	SSm3 0/1	SSm2 0/1	SSm1 0/1	SSm0 0/1

Note Only provided for the SCR00 and SCR01 registers. This bit is fixed to 1 for the other registers.

Remark 1. m: Unit number (m = 0, 1), n: Channel number (n = 0 to 3), p: CSI number (p = 00, 01, 10, 11, 20, 21)
mn = 00 to 03, 10, 11

Remark 2. ■: Setting is fixed in the simplified SPI (CSI) slave reception mode,
■: Setting disabled (set to the initial value)
×: Bit that cannot be used in this mode (set to the initial value when not used in any mode)
0/1: Set to 0 or 1 depending on the usage of the user

(2) Operation procedure

Figure 19 - 61 Initial Setting Procedure for Slave Reception

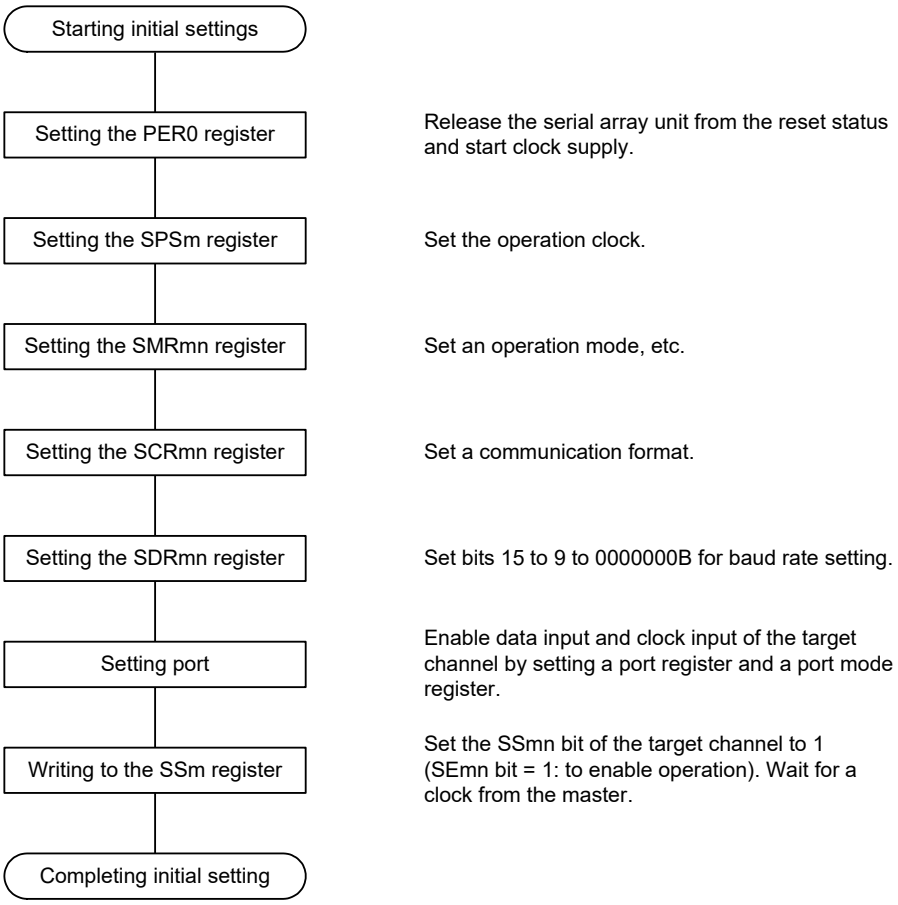

Figure 19 - 62 Procedure for Stopping Slave Reception

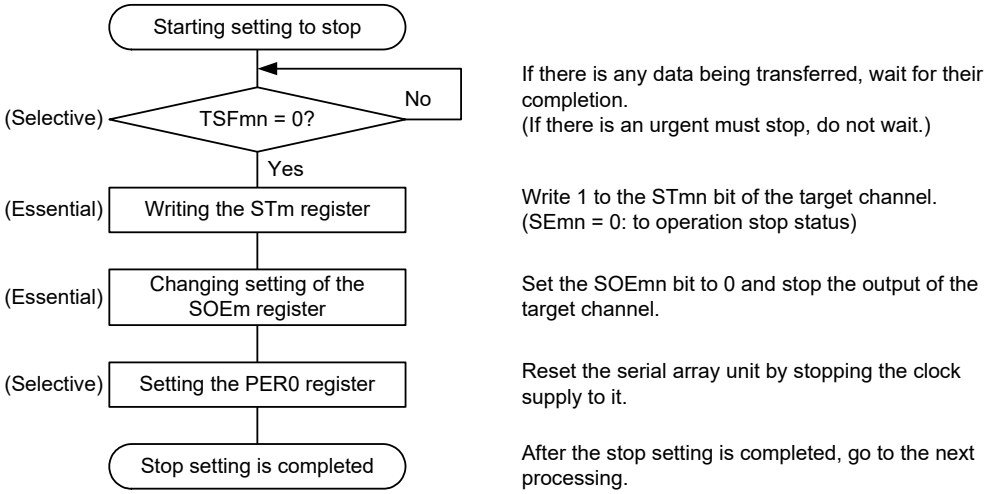

Figure 19 - 63 Procedure for Resuming Slave Reception

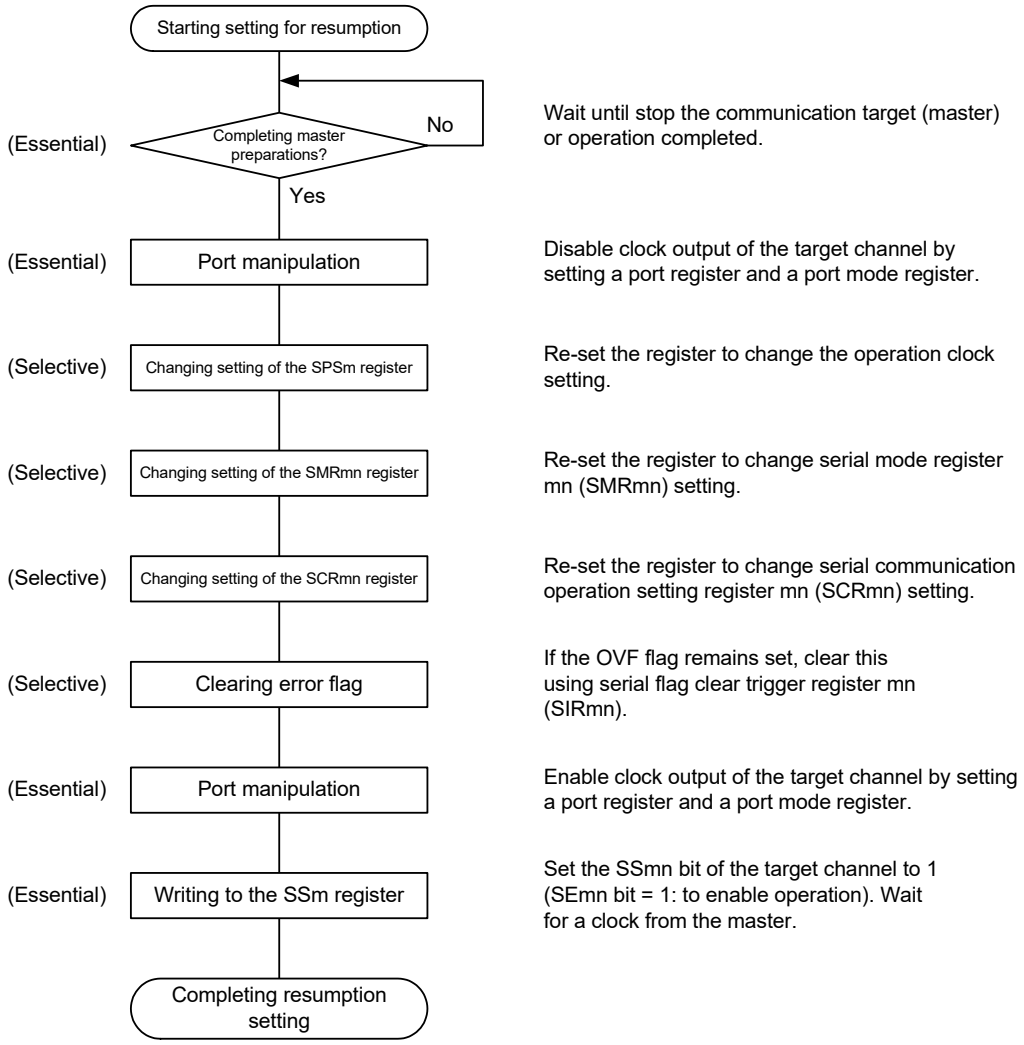

Remark If PER0 is rewritten while stopping the master transmission and the clock supply is stopped, wait until the transmission target (master) stops or transmission finishes, and then perform initialization instead of restarting the transmission.

(3) Processing flow (in single-reception mode)

Figure 19 - 64 Timing Chart of Slave Reception (in Single-Reception Mode)
(Type 1: DAPmn = 0, CKPmn = 0)

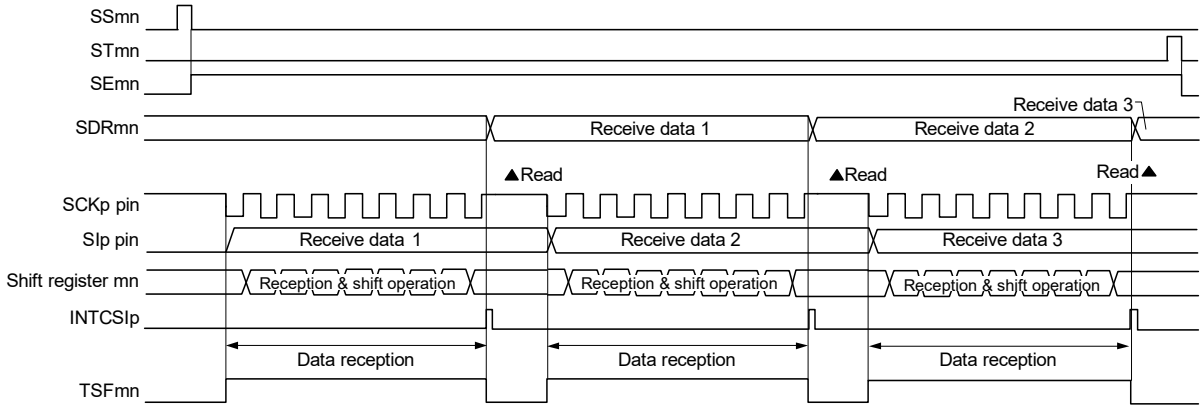

Remark m: Unit number (m = 0, 1), n: Channel number (n = 0 to 3), p: CSI number (p = 00, 01, 10, 11, 20, 21)
mn = 00 to 03, 10, 11

Figure 19 - 65 Flowchart of Slave Reception (in Single-Reception Mode)

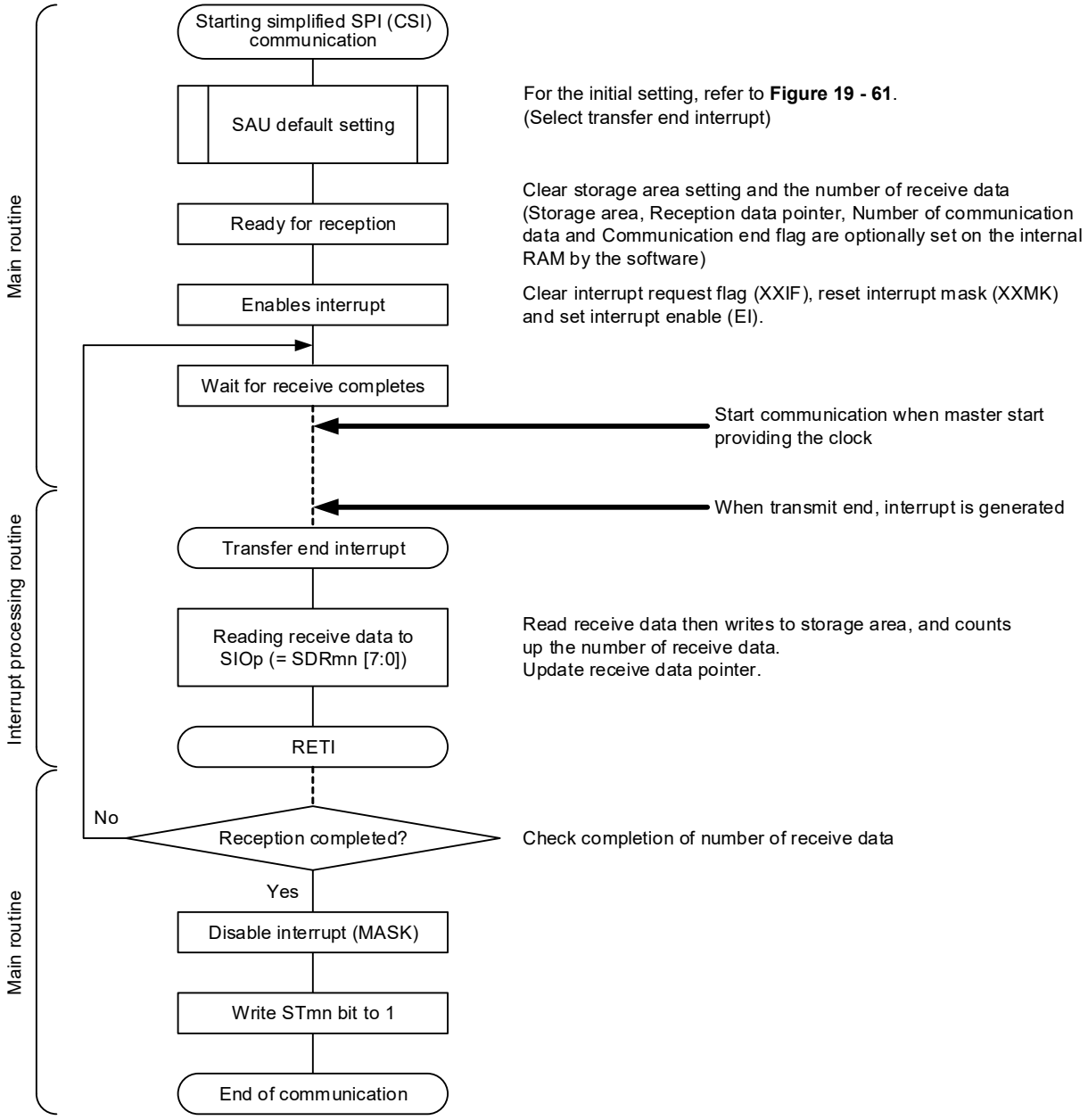

19.5.6 Slave transmission/reception

Slave transmission/reception is that the RL78 microcontroller transmits/receives data to/from another device in the state of a transfer clock being input from another device.

Simplified SPI	CSI00	CSI01	CSI10	CSI11	CSI20	CSI21
Target channel	Channel 0 of SAU0	Channel 1 of SAU0	Channel 2 of SAU0	Channel 3 of SAU0	Channel 0 of SAU1	Channel 1 of SAU1
Pins used	SCK00, SI00, SO00	SCK01, SI01, SO01	SCK10, SI10, SO10	SCK11, SI11, SO11	SCK20, SI20, SO20	SCK21, SI21, SO21
Interrupt	INTCSI00	INTCSI01	INTCSI10	INTCSI11	INTCSI20	INTCSI21
	Transfer end interrupt (in single-transfer mode) or buffer empty interrupt (in continuous transfer mode) can be selected.					
Error detection flag	Overrun error detection flag (OVFmn) only					
Transfer data length	7 or 8 bits					
Transfer rate	Max. f_{MCK}/6 [Hz]Notes 1, 2.					
Data phase	Selectable by the DAPmn bit of the SCRmn register • DAPmn = 0: Data I/O starts from the start of the operation of the serial clock. • DAPmn = 1: Data I/O starts half a clock before the start of the serial clock operation.					
Clock phase	Selectable by the CKPmn bit of the SCRmn register • CKPmn = 0: Non-reverse • CKPmn = 1: Reverse					
Data direction	MSB or LSB first					

Note 1. Because the external serial clock input to the SCK00, SCK01, SCK10, SCK11, SCK20, and SCK21 pins is sampled internally and used, the fastest transfer rate is f_{MCK}/6 [Hz].

Note 2. Use this operation within a range that satisfies the conditions above and the peripheral functions characteristics in the electrical specifications (see **CHAPTER 37** or **CHAPTER 38 ELECTRICAL SPECIFICATIONS**).

Remark 1. f_{MCK}: Operation clock frequency of target channel

Remark 2. m: Unit number (m = 0, 1), n: Channel number (n = 0 to 3), mn = 00 to 03, 10, 11

(1) Register setting

Figure 19 - 66 Example of Contents of Registers for Slave Transmission/Reception of simplified SPI (CSI00, CSI01, CSI10, CSI11, CSI20, CSI21)

(a) Serial mode register mn (SMRmn)

	15	14	13	12	11	10	9	8	7	6	5	4	3	2	1	0
SMRmn	CKSmn 0/1	CCSmn 1	0	0	0	0	0	STSmn 0	0	SISmn0 0	1	0	0	MDmn2 0	MDmn1 0	MDmn0 0/1

Operation clock (f_{MCK}) of channel n
0: Prescaler output clock CKm0 set by the SPSm register
1: Prescaler output clock CKm1 set by the SPSm register

Interrupt source of channel n
0: Transfer end interrupt
1: Buffer empty interrupt

(b) Serial communication operation setting register mn (SCRmn)

	15	14	13	12	11	10	9	8	7	6	5	4	3	2	1	0
SCRmn	TXEmn 1	RXEmn 1	DAPmn 0/1	CKPmn 0/1	0	EOCmn 0	PTCmn1 0	PTCmn0 0	DIRmn 0/1	0	SLCmn1 0	SLCmn0 0	0	1	DLSmn1 1Note	DLSmn0 0/1

Selection of the data and clock phase (For details about the setting, see **19.3 Registers Controlling Serial Array Unit**.)

Selection of data transfer sequence
0: Inputs/outputs data with MSB first
1: Inputs/outputs data with LSB first

Setting of data length
0: 7-bit data length
1: 8-bit data length

(c) Serial data register mn (SDRmn) (lower 8 bits: SIOp)

	15	14	13	12	11	10	9	8	7	6	5	4	3	2	1	0
SDRmn	0000000 Baud rate setting							0	Transmit data setting/receive data register							

SIOp

(d) Serial output register m (SOm)... Sets only the bits of the target channel.

	15	14	13	12	11	10	9	8	7	6	5	4	3	2	1	0
SOm	0	0	0	0	CKOm3 ×	CKOm2 ×	CKOm1 ×	CKOm0 ×	0	0	0	0	SOm3 0/1	SOm2 0/1	SOm1 0/1	SOm0 0/1

(e) Serial output enable register m (SOEm)... Sets only the bits of the target channel to 1.

	15	14	13	12	11	10	9	8	7	6	5	4	3	2	1	0
SOEm	0	0	0	0	0	0	0	0	0	0	0	0	SOEm3 0/1	SOEm2 0/1	SOEm1 0/1	SOEm0 0/1

(f) Serial channel start register m (SSm)... Sets only the bits of the target channel to 1.

	15	14	13	12	11	10	9	8	7	6	5	4	3	2	1	0
SSm	0	0	0	0	0	0	0	0	0	0	0	0	SSm3 0/1	SSm2 0/1	SSm1 0/1	SSm0 0/1

Note Only provided for the SCR00 and SCR01 registers. This bit is fixed to 1 for the other registers.

Caution **Be sure to set transmit data to the SIOp register before the clock from the master is started.**

Remark 1. m: Unit number (m = 0, 1), n: Channel number (n = 0 to 3), p: CSI number (p = 00, 01, 10, 11, 20, 21)
mn = 00 to 03, 10, 11

Remark 2. ■: Setting is fixed in the simplified SPI (CSI) master transmission/reception mode
■: Setting disabled (set to the initial value)
×: Bit that cannot be used in this mode (set to the initial value when not used in any mode)
0/1: Set to 0 or 1 depending on the usage of the user

(2) Operation procedure

Figure 19 - 67 Initial Setting Procedure for Slave Transmission/Reception

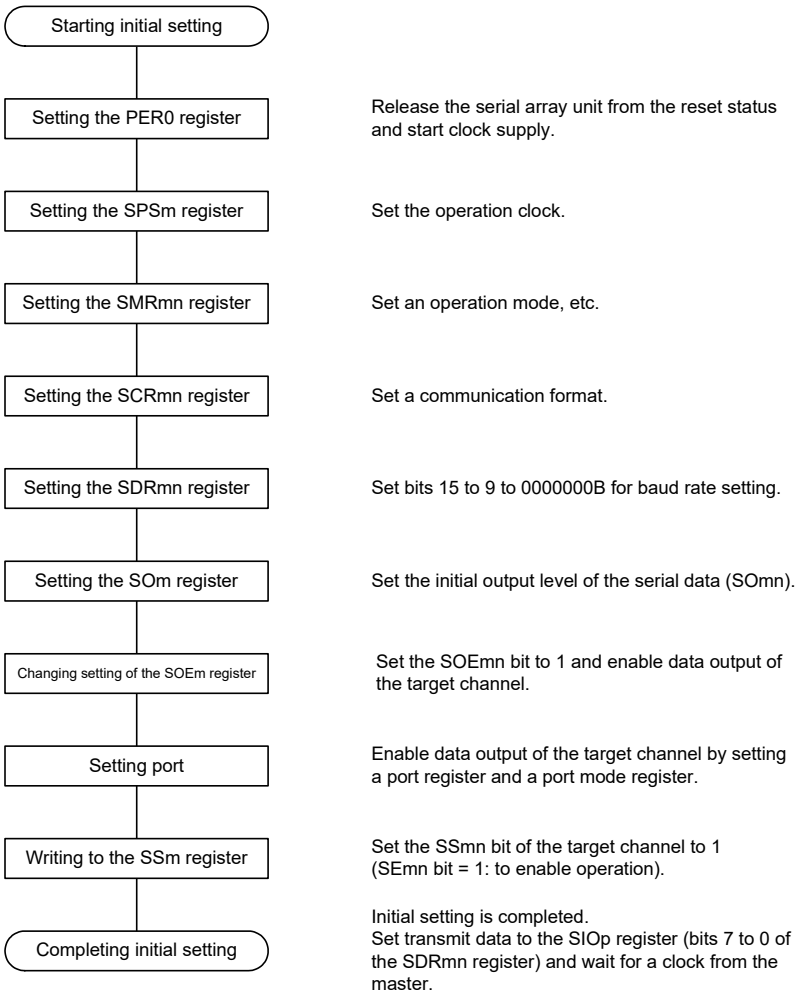

Caution Be sure to set transmit data to the SIOp register before the clock from the master is started.

Figure 19 - 68 Procedure for Stopping Slave Transmission/Reception

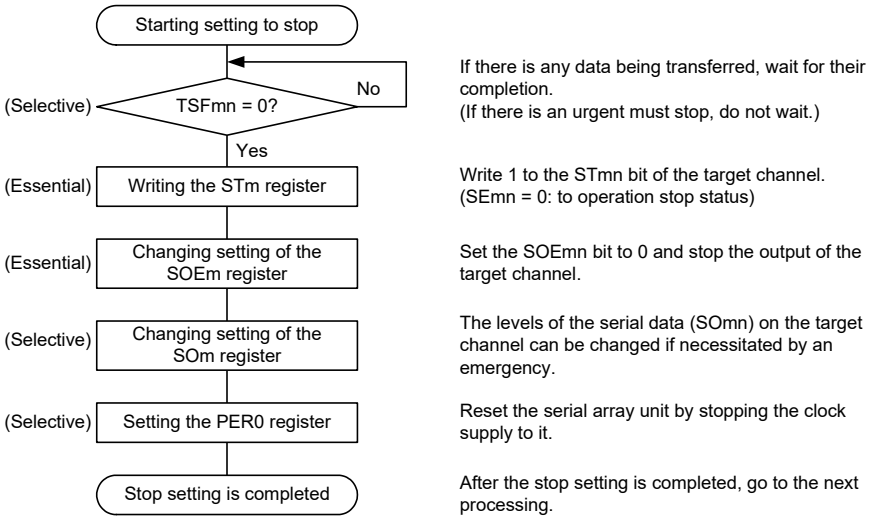

Figure 19 - 69 Procedure for Resuming Slave Transmission/Reception

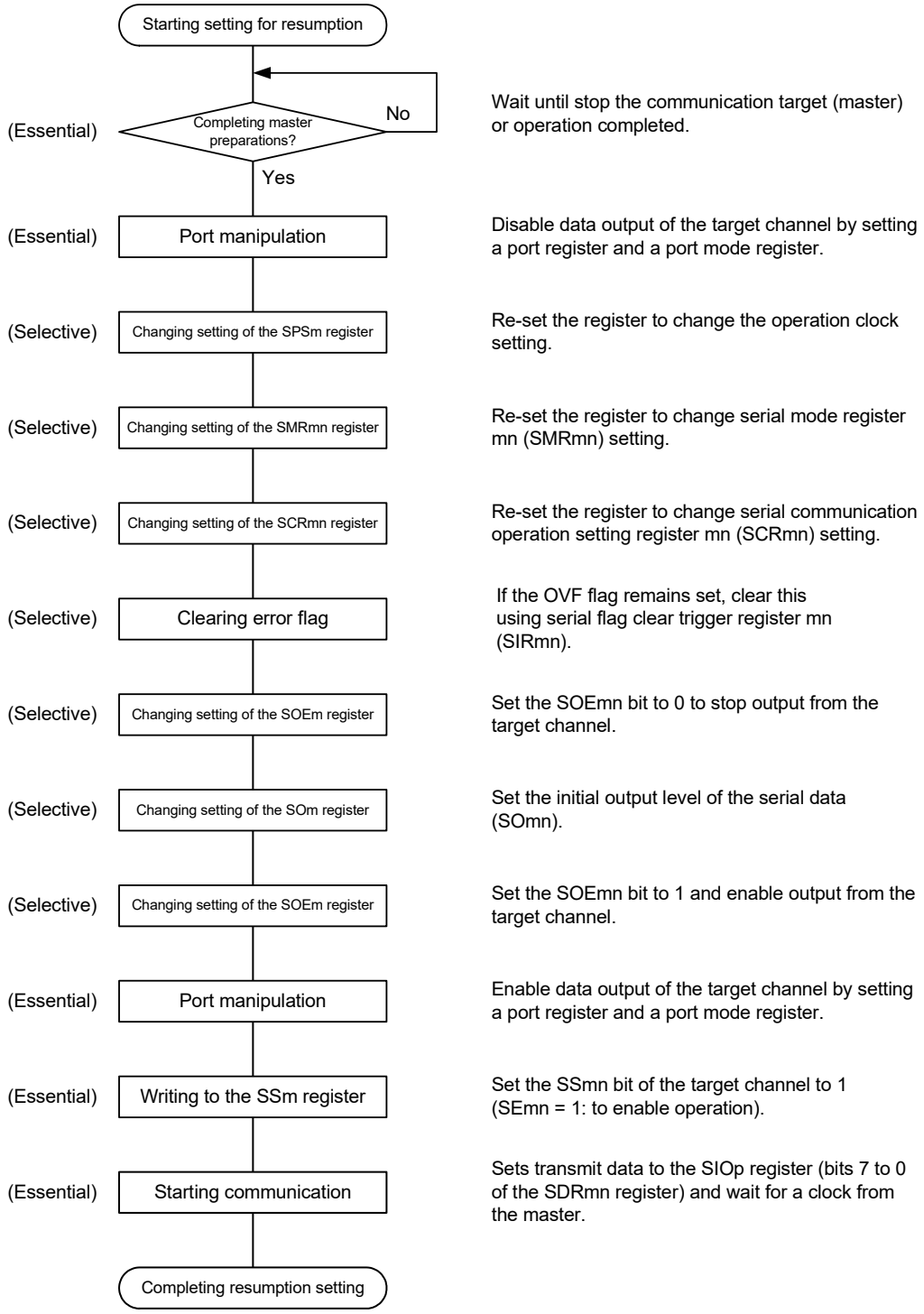

Caution 1. Be sure to set transmit data to the SIOp register before the clock from the master is started.

Caution 2. If PER0 is rewritten while stopping the master transmission and the clock supply is stopped, wait until the transmission target (master) stops or transmission finishes, and then perform initialization instead of restarting the transmission.

(3) Processing flow (in single-transmission/reception mode)

Figure 19 - 70 Timing Chart of Slave Transmission/Reception (in Single-Transmission/Reception Mode) (Type 1: DAPmn = 0, CKPmn = 0)

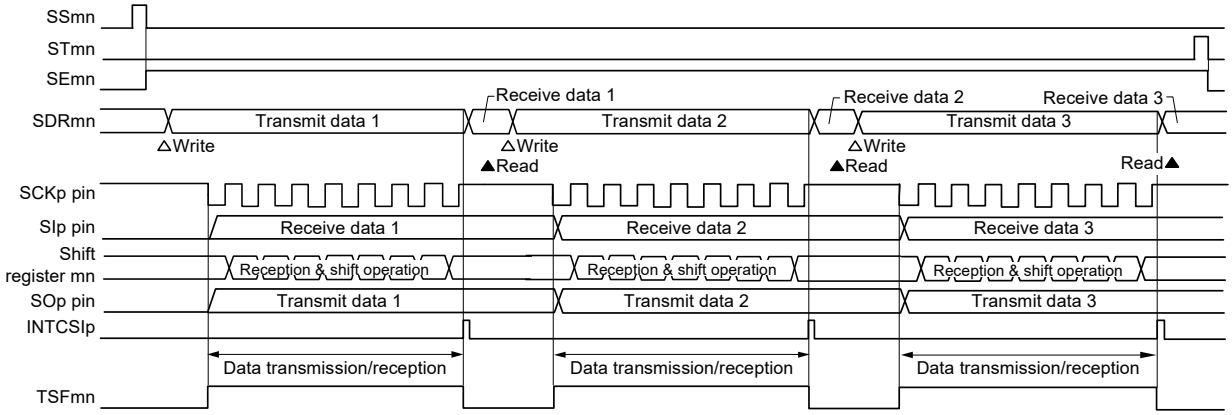

Remark m: Unit number (m = 0, 1), n: Channel number (n = 0 to 3), p: CSI number (p = 00, 01, 10, 11, 20, 21)
mn = 00 to 03, 10, 11

Figure 19 - 71 Flowchart of Slave Transmission/Reception (in Single- Transmission/Reception Mode)

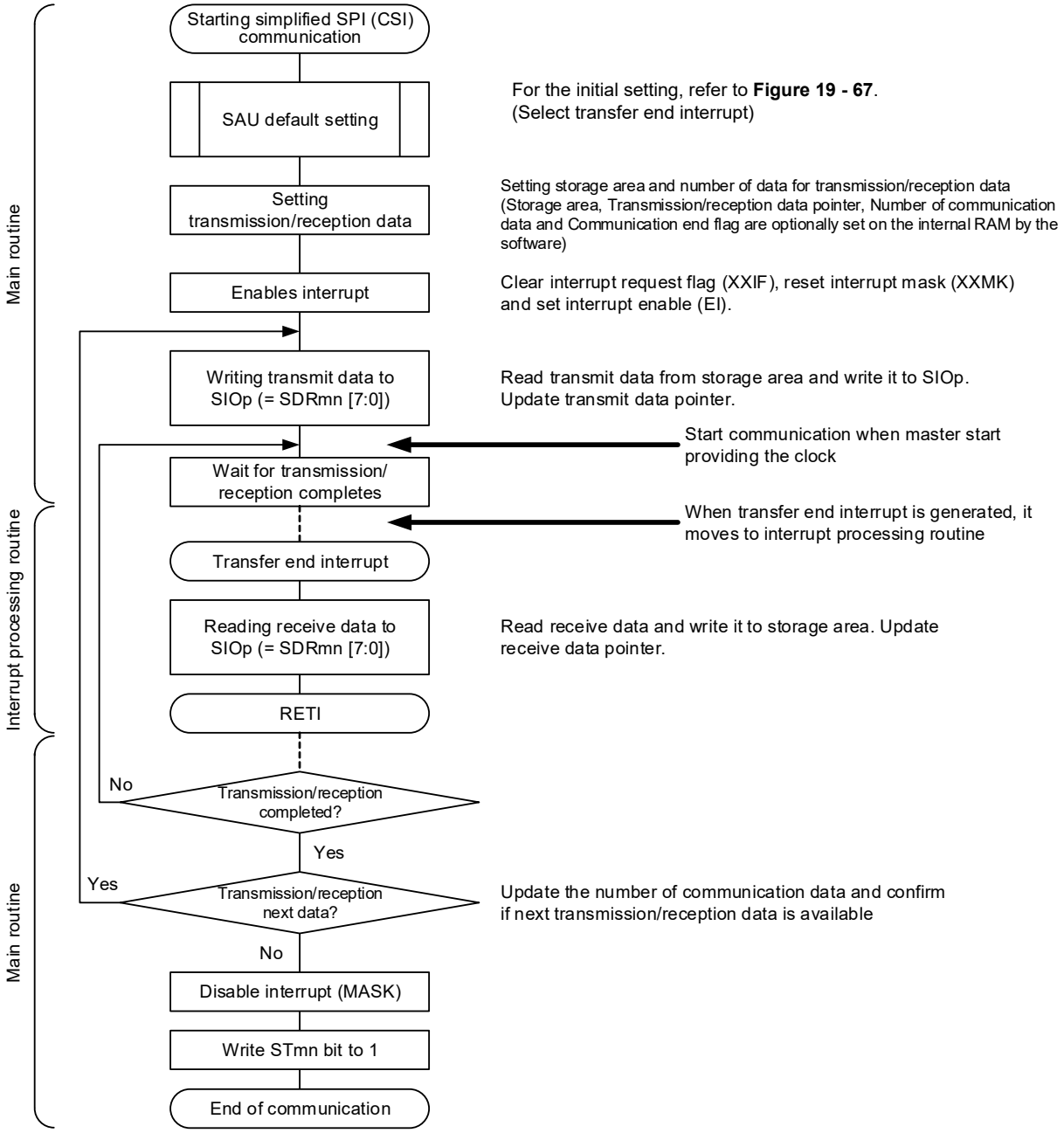

Caution **Be sure to set transmit data to the SIOp register before the clock from the master is started.**

(4) Processing flow (in continuous transmission/reception mode)

Figure 19 - 72 Timing Chart of Slave Transmission/Reception (in Continuous Transmission/Reception Mode) (Type 1: DAPmn = 0, CKPmn = 0)

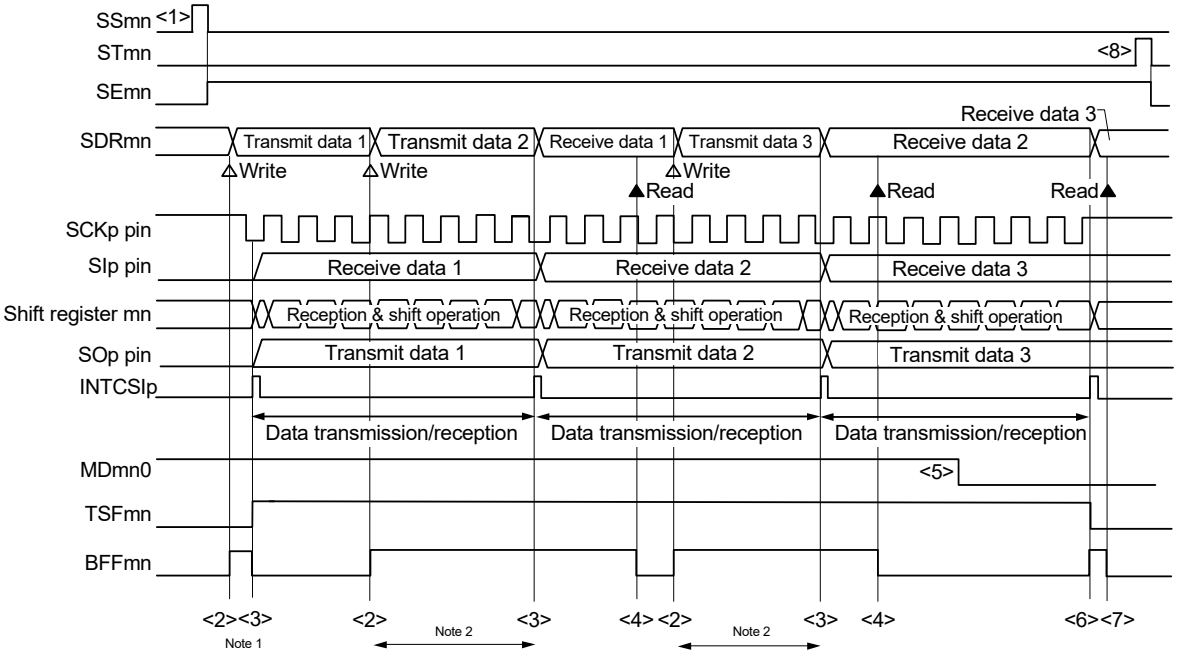

Note 1. If transmit data is written to the SDRmn register while the BFFmn bit of serial status register mn (SSRmn) is 1 (valid data is stored in serial data register mn (SDRmn)), the transmit data is overwritten.

Note 2. The transmit data can be read by reading the SDRmn register during this period. At this time, the transfer operation is not affected.

Caution **The MDmn0 bit of serial mode register mn (SMRmn) can be rewritten even during operation. However, rewrite it before transfer of the last bit is started, so that it has been rewritten before the transfer end interrupt of the last transmit data.**

Remark 1. <1> to <8> in the figure correspond to <1> to <8> in Figure 19 - 73 Flowchart of Slave Transmission/Reception (in Continuous Transmission/Reception Mode).

Remark 2. m: Unit number (m = 0, 1), n: Channel number (n = 0 to 3), p: CSI number (p = 00, 01, 10, 11, 20, 21)
mn = 00 to 03, 10, 11

Figure 19 - 73 Flowchart of Slave Transmission/Reception (in Continuous Transmission/Reception Mode)

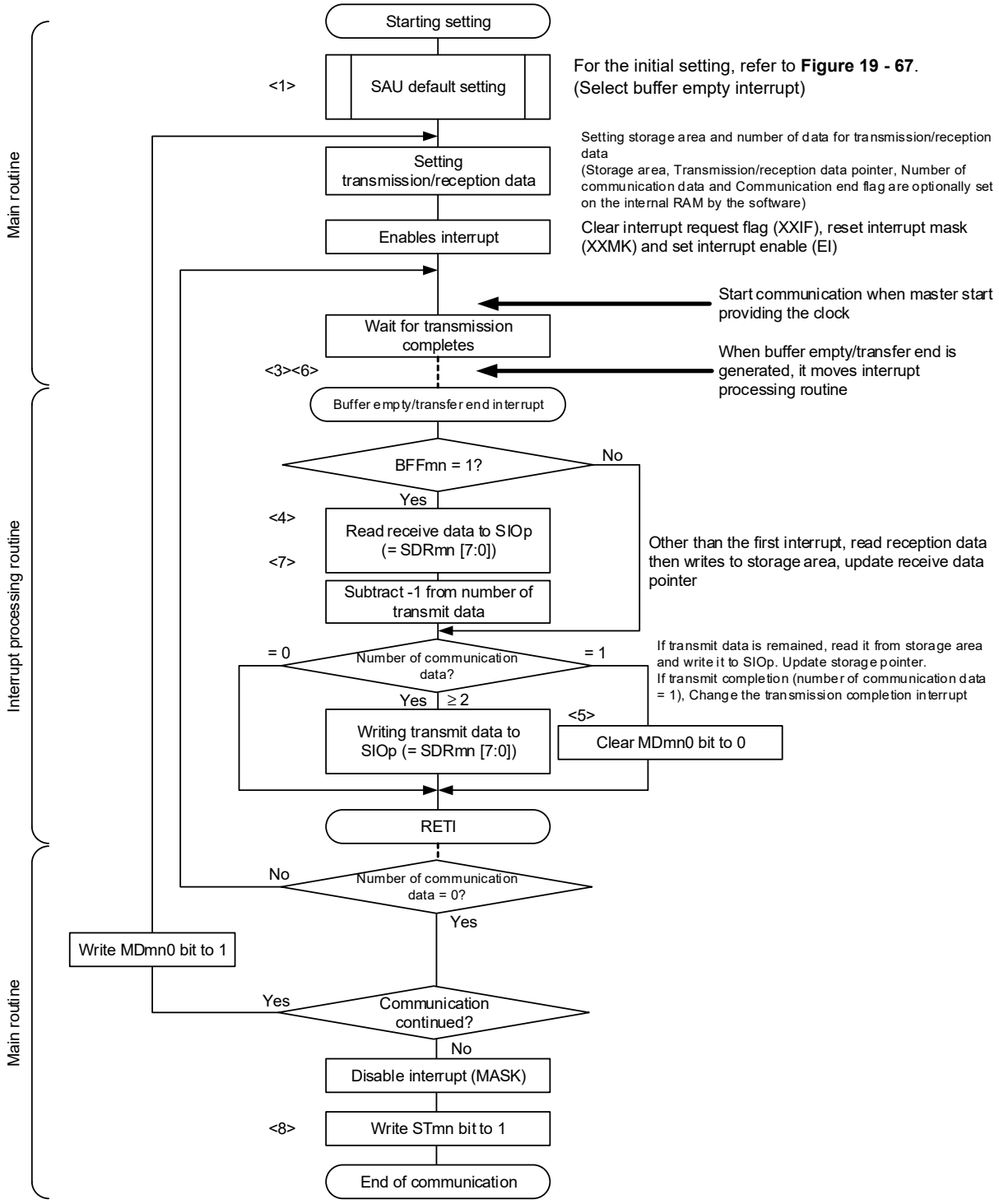

Caution **Be sure to set transmit data to the SIOp register before the clock from the master is started.**

Remark <1> to <8> in the figure correspond to <1> to <8> in Figure 19 - 72 Timing Chart of Slave Transmission/Reception (in Continuous Transmission/Reception Mode) (Type 1: DAPmn = 0, CKPmn = 0).

19.5.7 SNOOZE mode function

SNOOZE mode makes simplified SPI (CSI) operate reception by SCKp pin input detection while the STOP mode. Normally simplified SPI (CSI) stops communication in the STOP mode. But, using the SNOOZE mode makes reception simplified SPI (CSI) operate unless the CPU operation by detecting SCKp pin input. CSI00 can only be set to the SNOOZE mode.

When using the simplified SPI (CSI) in SNOOZE mode, make the following setting before switching to the STOP mode (see **Figure 19 - 75** and **Figure 19 - 77 Flowchart of SNOOZE Mode Operation**).

- When using the SNOOZE mode function, set the SWCm bit of serial standby control register m (SSCm) to 1 just before switching to the STOP mode. After the initial setting has been completed, set the SSm1 bit of serial channel start register m (SSm) to 1.
- The CPU shifts to the SNOOZE mode on detecting the valid edge of the SCKp signal following a transition to the STOP mode. A CSIp starts reception on detecting input of the serial clock on the SCKp pin.

Caution 1. The SNOOZE mode can only be specified when the high-speed on-chip oscillator clock is selected for f_{CLK}.

Caution 2. The maximum transfer rate when using CSIp in the SNOOZE mode is 1 Mbps.

(1) SNOOZE mode operation (once startup)

Figure 19 - 74 Timing Chart of SNOOZE Mode Operation (once startup) (Type 1: DAPmn = 0, CKPmn = 0)

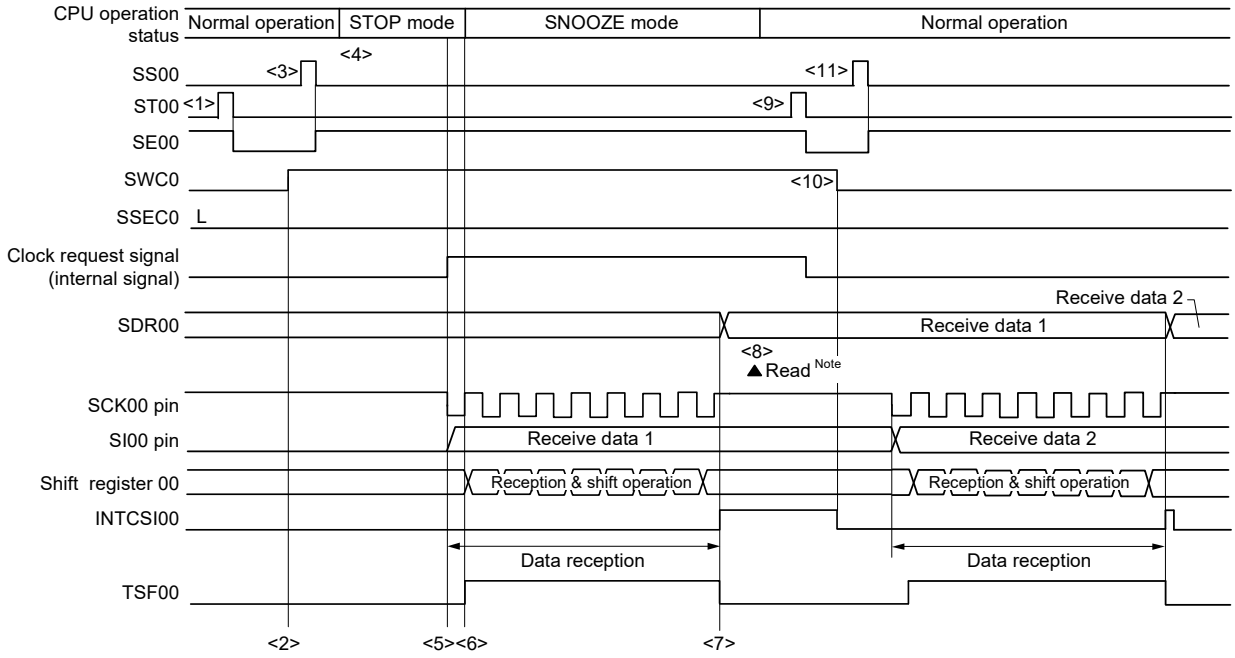

(**Caution** and **Remarks** are listed on the next page.)

Note Only read received data while SWCm = 1 and before the next edge of the SCKp pin input is detected.

Caution 1. Before switching to the SNOOZE mode or after reception operation in the SNOOZE mode finishes, set the STm0 bit to 1 (clear the SEm0 bit, and stop the operation).
And after completion the receive operation, also clearing SWCm bit to 0 (SNOOZE mode release).

Caution 2. When SWCm = 1, the BFFm1 and OVFm1 flags will not change.

Remark 1. <1> to <11> in the figure correspond to <1> to <11> in Figure 19 - 75 Flowchart of SNOOZE Mode Operation (once startup).

Remark 2. m = 0; p = 00

Figure 19 - 75 Flowchart of SNOOZE Mode Operation (once startup)

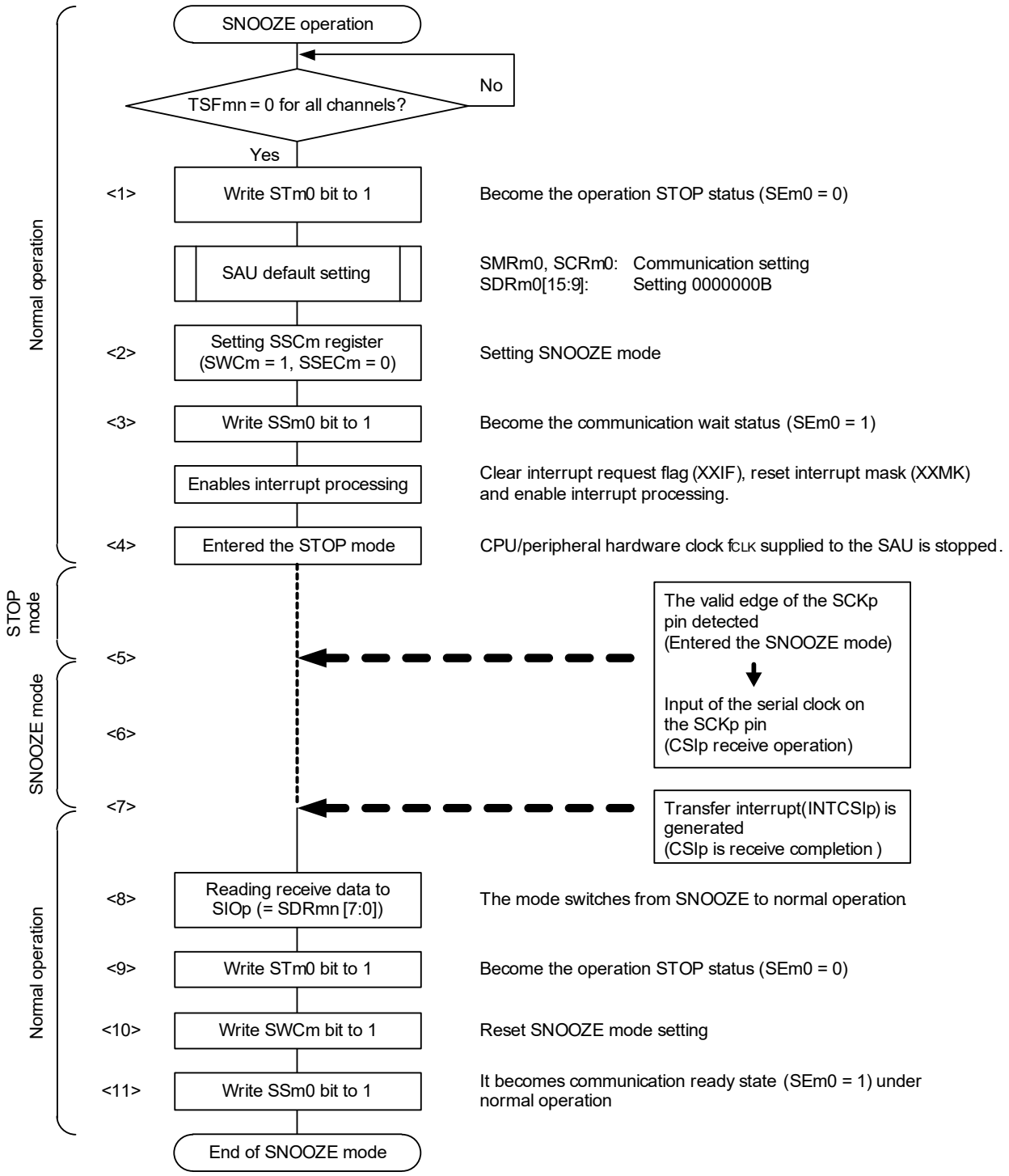

Remark 1. <1> to <11> in the figure correspond to <1> to <11> in Figure 19 - 74 Timing Chart of SNOOZE Mode Operation (once startup) (Type 1: DAPmn = 0, CKPmn = 0).

Remark 2. m = 0; p = 00

(2) SNOOZE mode operation (continuous startup)

Figure 19 - 76 Timing Chart of SNOOZE Mode Operation (continuous startup) (Type 1: DAPmn = 0, CKPmn = 0)

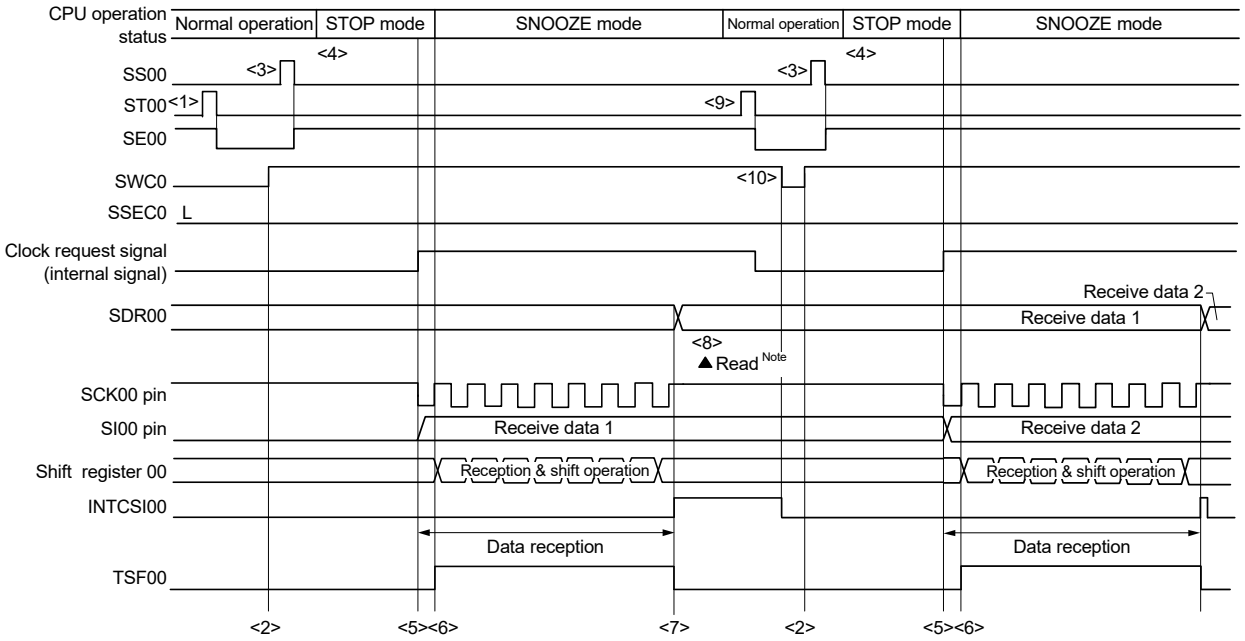

Note Only read received data while SWCm = 1 and before the next edge of the SCKp pin input is detected.

Caution 1. Before switching to the SNOOZE mode or after reception operation in the SNOOZE mode finishes, set the STm0 bit to 1 (clear the SEm0 bit, and stop the operation).
And after completion the receive operation, also clearing SWCm bit to 0 (SNOOZE release).

Caution 2. When SWCm = 1, the BFFm1 and OVFm1 flags will not change.

Remark 1. <1> to <10> in the figure correspond to <1> to <10> in Figure 19 - 77 Flowchart of SNOOZE Mode Operation (continuous startup).

Remark 2. m = 0; p = 00

Figure 19 - 77 Flowchart of SNOOZE Mode Operation (continuous startup)

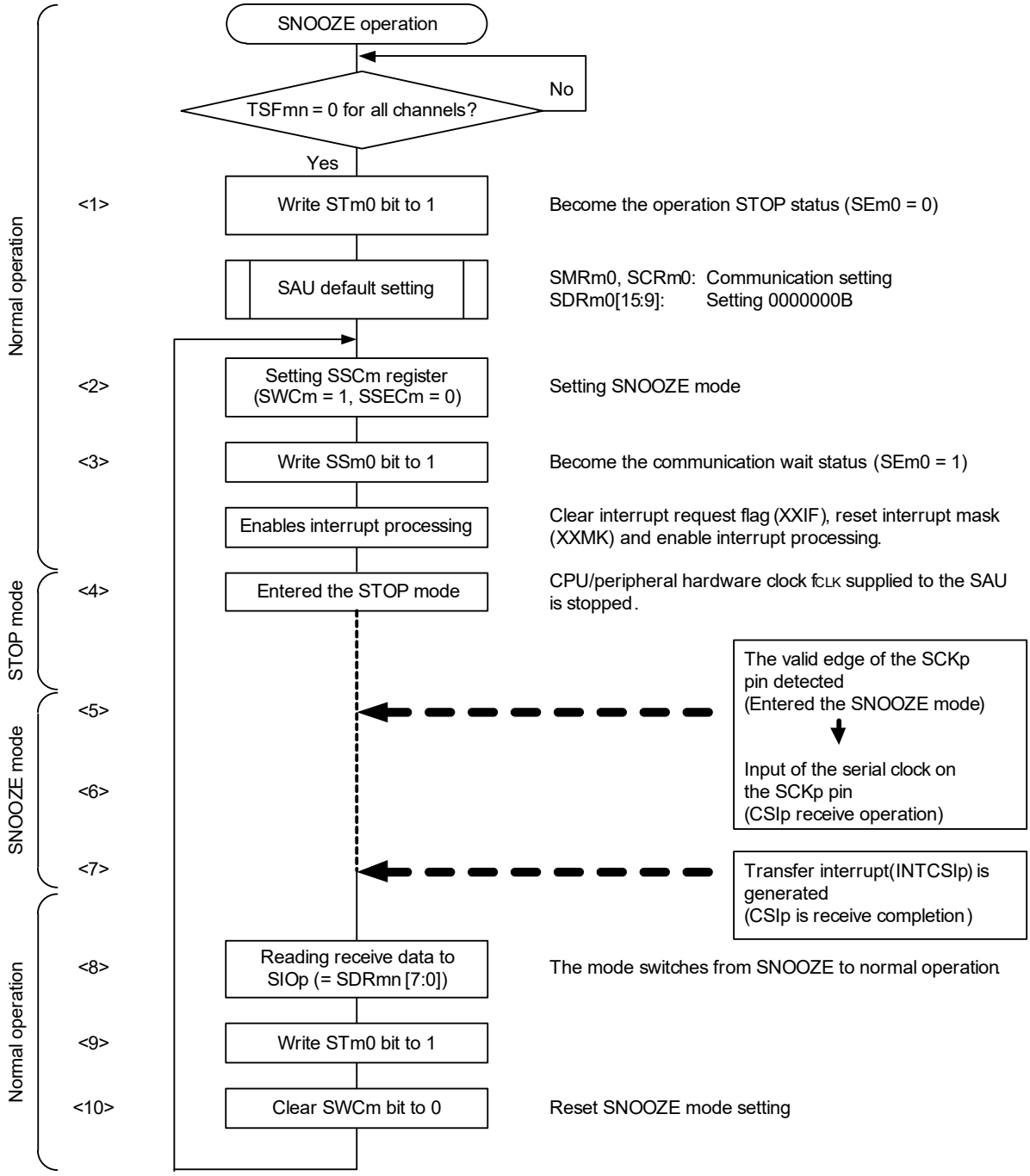

Remark 1. <1> to <10> in the figure correspond to <1> to <10> in Figure 19 - 76 Timing Chart of SNOOZE Mode Operation (continuous startup) (Type 1: DAPmn = 0, CKPmn = 0).

Remark 2. m = 0; p = 00

19.5.8 Calculating transfer clock frequency

The transfer clock frequency for simplified SPI (CSI00, CSI01, CSI10, CSI11, CSI20, CSI21) communication can be calculated by the following expressions.

(1) Master

(Transfer clock frequency) = {Operation clock (f_{MCK}) frequency of target channel} ÷ (SDRmn[15:9] + 1) ÷ 2 [Hz]

(2) Slave

(Transfer clock frequency) = {Frequency of serial clock (SCK) supplied by master}[Note] [Hz]

Note The permissible maximum transfer clock frequency is $f_{MCK}/6$.

Remark The value of SDRmn[15:9] is the value of bits 15 to 9 of serial data register mn (SDRmn) (0000000B to 1111111B) and therefore is 0 to 127.

The operation clock (f_{MCK}) is determined by serial clock select register m (SPSm) and bit 15 (CKSmn) of serial mode register mn (SMRmn).

Table 19 - 5 Selection of Operation Clock For Simplified SPI

SMRmn Register	SPSm Register								Operation Clock (f_{MCK})Note	
CKSmn	PRS m13	PRS m12	PRS m11	PRS m10	PRS m03	PRS m02	PRS m01	PRS m00		f_{CLK} = 32 MHz
0	×	×	×	×	0	0	0	0	f_{CLK}	32 MHz
	×	×	×	×	0	0	0	1	$f_{CLK}/2$	16 MHz
	×	×	×	×	0	0	1	0	$f_{CLK}/2^2$	8 MHz
	×	×	×	×	0	0	1	1	$f_{CLK}/2^3$	4 MHz
	×	×	×	×	0	1	0	0	$f_{CLK}/2^4$	2 MHz
	×	×	×	×	0	1	0	1	$f_{CLK}/2^5$	1 MHz
	×	×	×	×	0	1	1	0	$f_{CLK}/2^6$	500 kHz
	×	×	×	×	0	1	1	1	$f_{CLK}/2^7$	250 kHz
	×	×	×	×	1	0	0	0	$f_{CLK}/2^8$	125 kHz
	×	×	×	×	1	0	0	1	$f_{CLK}/2^9$	62.5 kHz
	×	×	×	×	1	0	1	0	$f_{CLK}/2^{10}$	31.25 kHz
	×	×	×	×	1	0	1	1	$f_{CLK}/2^{11}$	15.63 kHz
	×	×	×	×	1	1	0	0	$f_{CLK}/2^{12}$	7.81 kHz
	×	×	×	×	1	1	0	1	$f_{CLK}/2^{13}$	3.91 kHz
	×	×	×	×	1	1	1	0	$f_{CLK}/2^{14}$	1.95 kHz
	×	×	×	×	1	1	1	1	$f_{CLK}/2^{15}$	977 Hz
1	0	0	0	0	×	×	×	×	f_{CLK}	32 MHz
	0	0	0	1	×	×	×	×	$f_{CLK}/2$	16 MHz
	0	0	1	0	×	×	×	×	$f_{CLK}/2^2$	8 MHz
	0	0	1	1	×	×	×	×	$f_{CLK}/2^3$	4 MHz
	0	1	0	0	×	×	×	×	$f_{CLK}/2^4$	2 MHz
	0	1	0	1	×	×	×	×	$f_{CLK}/2^5$	1 MHz
	0	1	1	0	×	×	×	×	$f_{CLK}/2^6$	500 kHz
	0	1	1	1	×	×	×	×	$f_{CLK}/2^7$	250 kHz
	1	0	0	0	×	×	×	×	$f_{CLK}/2^8$	125 kHz
	1	0	0	1	×	×	×	×	$f_{CLK}/2^9$	62.5 kHz
	1	0	1	0	×	×	×	×	$f_{CLK}/2^{10}$	31.25 kHz
	1	0	1	1	×	×	×	×	$f_{CLK}/2^{11}$	15.63 kHz
	1	1	0	0	×	×	×	×	$f_{CLK}/2^{12}$	7.81 kHz
	1	1	0	1	×	×	×	×	$f_{CLK}/2^{13}$	3.91 kHz
	1	1	1	0	×	×	×	×	$f_{CLK}/2^{14}$	1.95 kHz
	1	1	1	1	×	×	×	×	$f_{CLK}/2^{15}$	977 Hz

Note When changing the clock selected for f_{CLK} (by changing the system clock control register (CKC) value), do so after having stopped (serial channel stop register m (STm) = 000FH) the operation of the serial array unit (SAU).

Remark 1. ×: Don't care

Remark 2. m: Unit number (m = 0, 1), n: Channel number (n = 0 to 3), mn = 00 to 03, 10, 11

19.5.9 Procedure for processing errors that occurred during simplified SPI (CSI00, CSI01, CSI10, CSI11, CSI20, CSI21) communication

The procedure for processing errors that occurred during simplified SPI (CSI00, CSI01, CSI10, CSI11, CSI20, CSI21) communication is described in Figure 19 - 78.

Figure 19 - 78 Processing Procedure in Case of Overrun Error

Software Manipulation	Hardware Status	Remark
Reads serial data register mn (SDRmn). →	The BFFmn bit of the SSRmn register is set to 0 and channel n is enabled to receive data.	This is to prevent an overrun error if the next reception is completed during error processing.
Reads serial status register mn (SSRmn).		Error type is identified and the read value is used to clear error flag.
Writes 1 to serial flag clear trigger register mn (SIRmn). →	Error flag is cleared.	Error can be cleared only during reading, by writing the value read from the SSRmn register to the SIRmn register without modification.

Remark m: Unit number (m = 0, 1), n: Channel number (n = 0 to 3), mn = 00 to 03, 10, 11

19.6 Clock Synchronous Serial Communication with Slave Select Input Function

Channel 0 of SAU0 correspond to the clock synchronous serial communication with slave select input function.

[Data transmission/reception]
- Data length of 7 or 8 bits
- Phase control of transmit/receive data
- MSB/LSB first selectable
- Level setting of transmit/receive data

[Clock control]
- Phase control of I/O clock
- Setting of transfer period by prescaler and internal counter of each channel
- Maximum transfer rate[Note]
  During slave communication: Max. $f_{MCK}/6$

[Interrupt function]
- Transfer end interrupt/buffer empty interrupt

[Error detection flag]
- Overrun error

Note Use the clocks within a range satisfying the SCK cycle time (t_{KCY}) characteristics. For details, see **CHAPTER 37** or **CHAPTER 38 ELECTRICAL SPECIFICATIONS**.

- 24, 32, 36-pin products

Unit	Channel	Used as Simplified SPI (CSI)	Used as UART	Used as Simplified I²C
0	0	CSI00 (supporting slave select input function)	UART0 (supporting LIN-bus)	IIC00
	1	—		—
	2	—	UART1	—
	3	CSI11		IIC11
1	0	CSI20	UART2	IIC20
	1	—		—

- 48-pin products

Unit	Channel	Used as Simplified SPI (CSI)	Used as UART	Used as Simplified I²C
0	0	CSI00 (supporting slave select input function)	UART0 (supporting LIN-bus)	IIC00
	1	CSI01		IIC01
	2	—	UART1	—
	3	CSI11		IIC11
1	0	CSI20	UART2	IIC20
	1	CSI21		IIC21

• 64-pin products

Unit	Channel	Used as Simplified SPI (CSI)	Used as UART	Used as Simplified I²C
0	0	CSI00 (supporting slave select input function)	UART0 (supporting LIN-bus)	IIC00
	1	CSI01		IIC01
	2	CSI10	UART1	IIC10
	3	CSI11		IIC11
1	0	CSI20	UART2	IIC20
	1	CSI21		IIC21

Slave select input function performs the following three types of communication operations.

• Slave transmission (See **19.6.1**.)
• Slave reception (See **19.6.2**.)
• Slave transmission/reception (See **19.6.3**.)

Multiple slaves can be connected to a master and communication can be performed by using the slave select input function. The master outputs a slave select signal to the slave (one) that is the other party of communication, and each slave judges whether it has been selected as the other party of communication and controls the SO pin output. When a slave is selected, transmit data can be communicated from the SO pin to the master. When a slave is not selected, the SO pin is set to high-level output. Therefore, in an environment where multiple slaves are connected, it is necessary set the SO pin to N-ch open-drain and pull up the node. Furthermore, when a slave is not selected, no transmission/reception operation is performed even if a serial clock is input from the master.

Caution Output the slave select signal by port manipulation.

Figure 19 - 79 Example of Slave Select Input Function Configuration

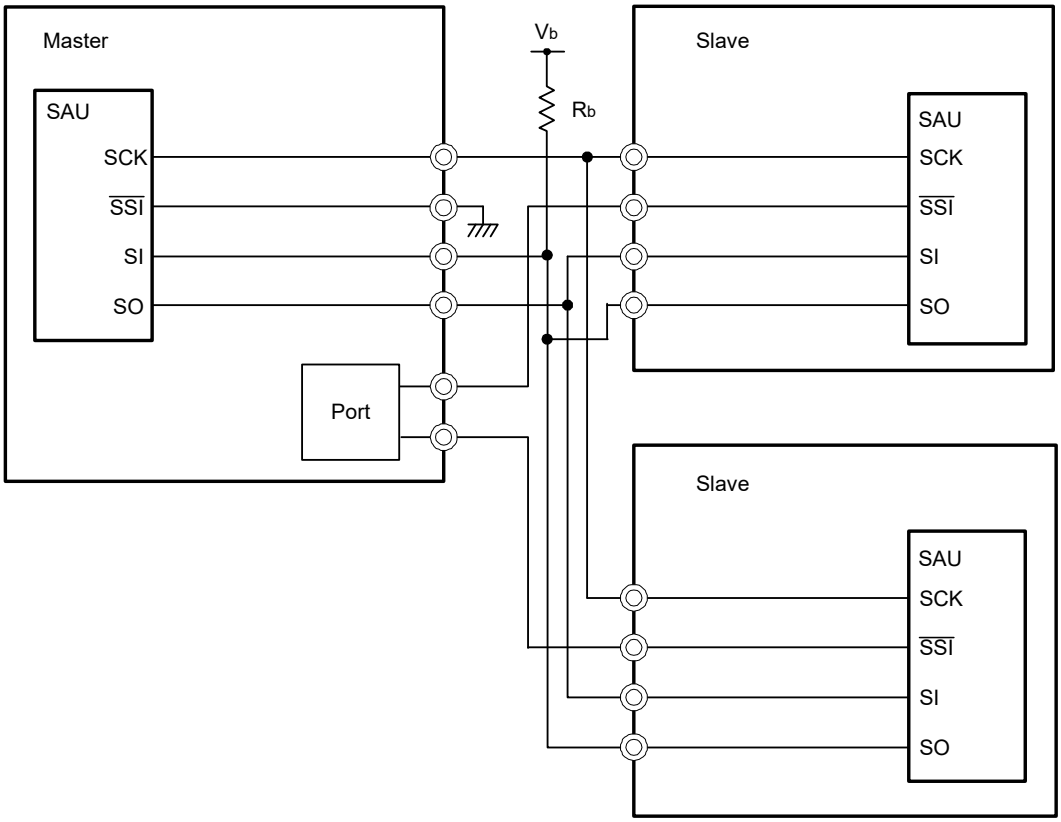

Caution Make sure $EV_{DD0} \geq V_b$.
Select the N-ch open-drain output (EV_{DD} tolerance) mode for the SO00 pin.

Figure 19 - 80 Slave Select Input Function Timing Diagram

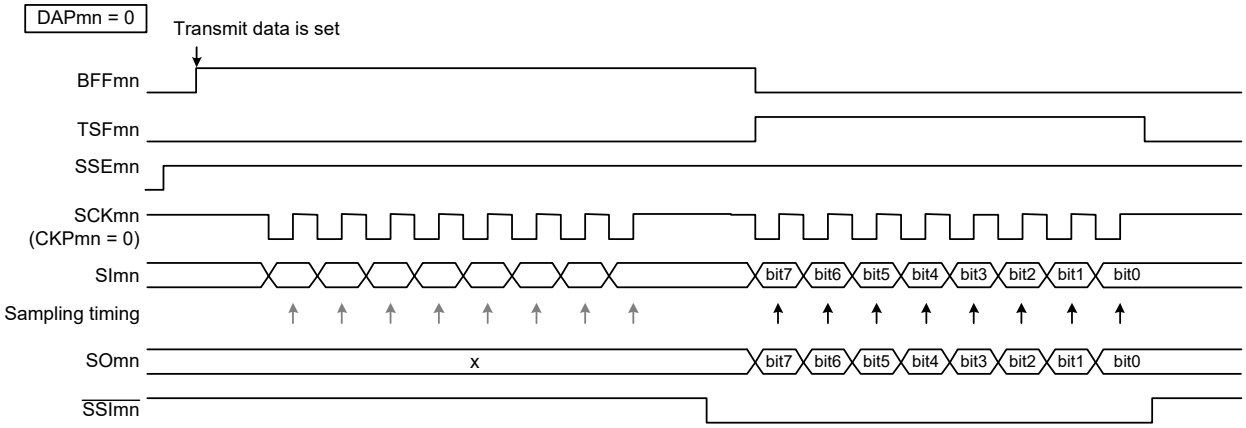

While $\overline{\text{SSImn}}$ is at high level, transmission is not performed even if the falling edge of SCKmn (serial clock) arrives, and neither is receive data sampled in synchronization with the rising edge.
When $\overline{\text{SSImn}}$ goes to low level, data is output (shifted) in synchronization with the falling edge of the serial clock and a reception operation is performed in synchronization with the rising edge.

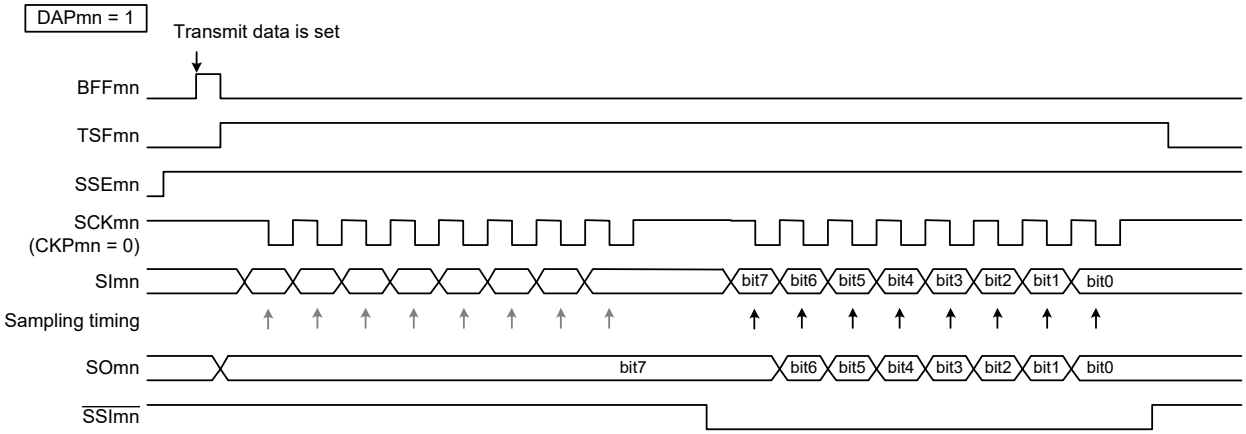

If DAPmn = 1, when transmit data is set while $\overline{\text{SSImn}}$ is at high level, the first data (bit 7) is output to the data output. However, no shift operation is performed even if the rising edge of SCKmn (serial clock) arrives, and neither is receive data sampled in synchronization with the falling edge. When $\overline{\text{SSImn}}$ goes to low level, data is output (shifted) in synchronization with the next rising edge and a reception operation is performed in synchronization with the falling edge.

Remark m: Unit number (m = 0), n: Channel number (n = 0)

19.6.1 Slave transmission

Slave transmission is that the RL78 microcontroller transmits data to another device in the state of a transfer clock being input from another device.

Slave select Input function	CSI00
Target channel	Channel 0 of SAU0
Pins used	SCK00, SO00, $\overline{\text{SSI00}}$
Interrupt	INTCSI00
	Transfer end interrupt (in single-transfer mode) or buffer empty interrupt (in continuous transfer mode) can be selected.
Error detection flag	Overrun error detection flag (OVFmn) only
Transfer data length	7 or 8 bits
Transfer rate	Max. $f_{MCK}/6$ [Hz]Notes 1, 2
Data phase	Selectable by the DAPmn bit of the SCRmn register • DAPmn = 0: Data output starts from the start of the operation of the serial clock. • DAPmn = 1: Data output starts half a clock before the start of the serial clock operation.
Clock phase	Selectable by the CKPmn bit of the SCRmn register • CKPmn = 0: Non-reverse • CKPmn = 1: Reverse
Data direction	MSB or LSB first
Slave select Input function	Slave select input function operation selectable

Note 1. Because the external serial clock input to the SCK00 pin is sampled internally and used, the fastest transfer rate is $f_{MCK}/6$ [Hz].

Note 2. Use this operation within a range that satisfies the conditions above and the peripheral functions characteristics in the electrical specifications (see **CHAPTER 37** or **CHAPTER 38 ELECTRICAL SPECIFICATIONS**).

Remark 1. f_{MCK}: Operation clock frequency of target channel

Remark 2. m: Unit number (m = 0), n: Channel number (n = 0)

(1) Register setting

Figure 19 - 81 Example of Contents of Registers for Slave Transmission of Slave Select Input Function (CSI00) (1/2)

(a) Serial mode register mn (SMRmn)

	15	14	13	12	11	10	9	8	7	6	5	4	3	2	1	0
SMRmn	CKSmn 0/1	CCSmn 1	0	0	0	0	0	STSmn 0	0	SISmn0 0	1	0	0	MDmn2 0	MDmn1 0	MDmn0 0/1

Operation clock (f_{MCK}) of channel n
0: Prescaler output clock CKm0 set by the SPSm register
1: Prescaler output clock CKm1 set by the SPSm register

Interrupt source of channel n
0: Transfer end interrupt
1: Buffer empty interrupt

(b) Serial communication operation setting register mn (SCRmn)

	15	14	13	12	11	10	9	8	7	6	5	4	3	2	1	0
SCRmn	TXEmn 1	RXEmn 0	DAPmn 0/1	CKPmn 0/1	0	EOCmn 0	PTCmn1 0	PTCmn0 0	DIRmn 0/1	0	SLCmn1 0	SLCmn0 0	0	1	DLSmn1 1	DLSmn0 0/1

Selection of the data and clock phase (For details about the setting, see **19.3 Registers Controlling Serial Array Unit**)

Selection of data transfer sequence
0: Inputs/outputs data with MSB first
1: Inputs/outputs data with LSB first

Setting of data length
0: 7-bit data length
1: 8-bit data length

(c) Serial data register mn (SDRmn) (lower 8 bits: SIOp)

	15	14	13	12	11	10	9	8	7	6	5	4	3	2	1	0
SDRmn	0000000 Baud rate setting							0	Transmit data setting							

SIOp

(d) Serial output register m (SOm)... Sets only the bits of the target channel.

	15	14	13	12	11	10	9	8	7	6	5	4	3	2	1	0
SOm	0	0	0	0	CKOm3 ×	CKOm2 ×	CKOm1 ×	CKOm0 ×	0	0	0	0	SOm3 ×	SOm2 ×	SOm1 ×	SOm0 0/1

(e) Serial output enable register m (SOEm)... Sets only the bits of the target channel to 1.

	15	14	13	12	11	10	9	8	7	6	5	4	3	2	1	0
SOEm	0	0	0	0	0	0	0	0	0	0	0	0	SOEm3 ×	SOEm2 ×	SOEm1 ×	SOEm0 0/1

Remark 1. m: Unit number (m = 0), n: Channel number (n = 0), p: CSI number (p = 00)

Remark 2. ■: Setting is fixed in the simplified SPI (CSI) slave transmission mode,
■: Setting disabled (set to the initial value)
×: Bit that cannot be used in this mode (set to the initial value when not used in any mode)
0/1: Set to 0 or 1 depending on the usage of the user

Figure 19 - 82 Example of Contents of Registers for Slave Transmission of Slave Select Input Function (CSI00) (2/2)

(f) Serial channel start register m (SSm)... Sets only the bits of the target channel to 1.

	15	14	13	12	11	10	9	8	7	6	5	4	3	2	1	0
SSm	0	0	0	0	0	0	0	0	0	0	0	0	SSm3 ×	SSm2 ×	SSm1 ×	SSm0 0/1

(g) Input switch control register (ISC)... $\overline{\text{SSI00}}$ input setting in CSI00 slave channel (channel 0 of unit 0).

	7	6	5	4	3	2	1	0
ISC	SSIE00 0/1	0	0	0	0	0	ISC1 0/1	ISC0 0/1

0: Disables the input value of the $\overline{\text{SSI00}}$ pin
1: Enables the input value of the $\overline{\text{SSI00}}$ pin

Remark 1. m: Unit number (m = 0), n: Channel number (n = 0), p: CSI number (p = 00)

Remark 2. ■: Setting disabled (set to the initial value)
×: Bit that cannot be used in this mode (set to the initial value when not used in any mode)
0/1: Set to 0 or 1 depending on the usage of the user

(2) Operation procedure

Figure 19 - 83 Initial Setting Procedure for Slave Transmission

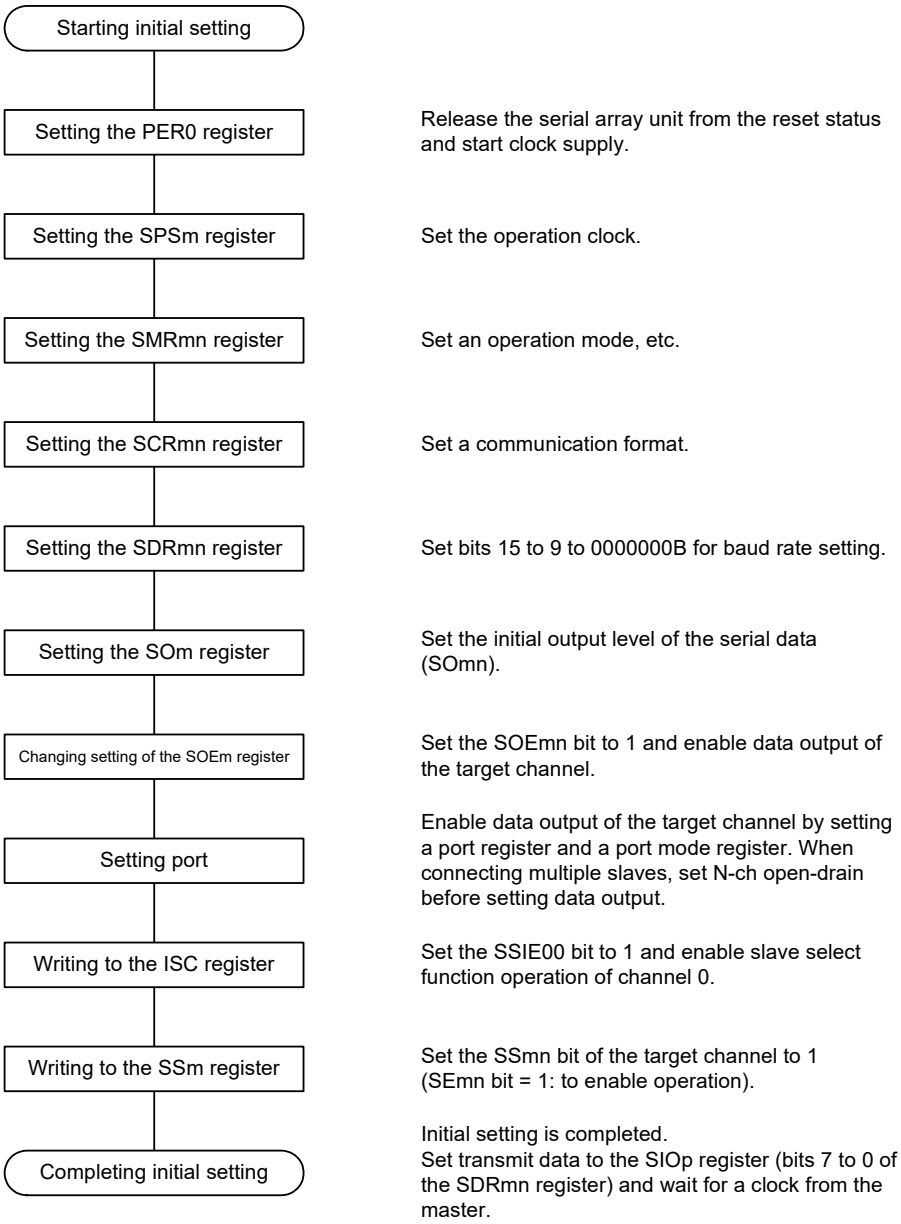

Remark m: Unit number (m = 0), n: Channel number (n = 0), p: CSI number (p = 00)

Figure 19 - 84 Procedure for Stopping Slave Transmission

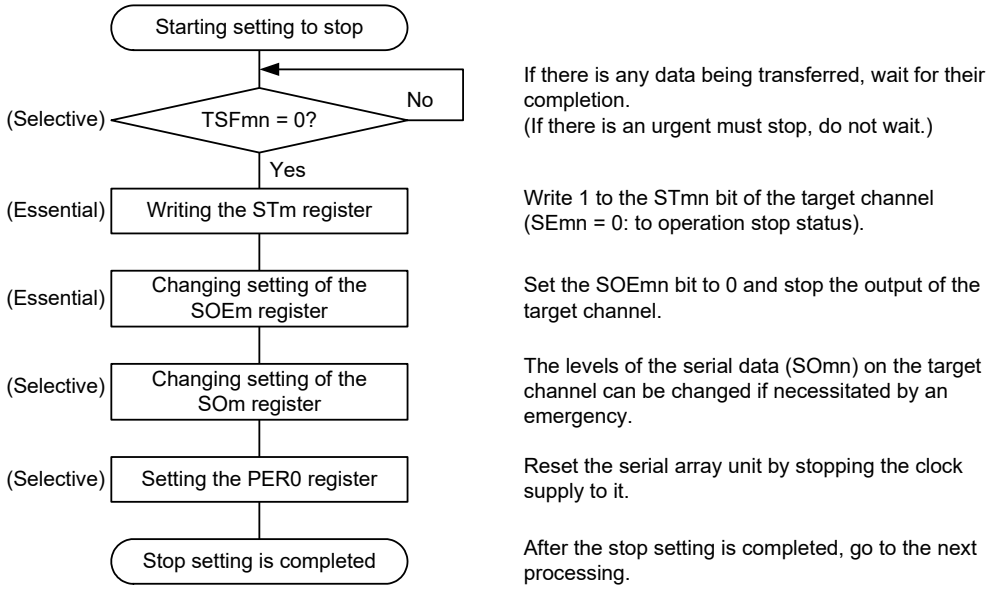

Remark m: Unit number (m = 0), n: Channel number (n = 0), p: CSI number (p = 00)

Figure 19 - 85 Procedure for Resuming Slave Transmission

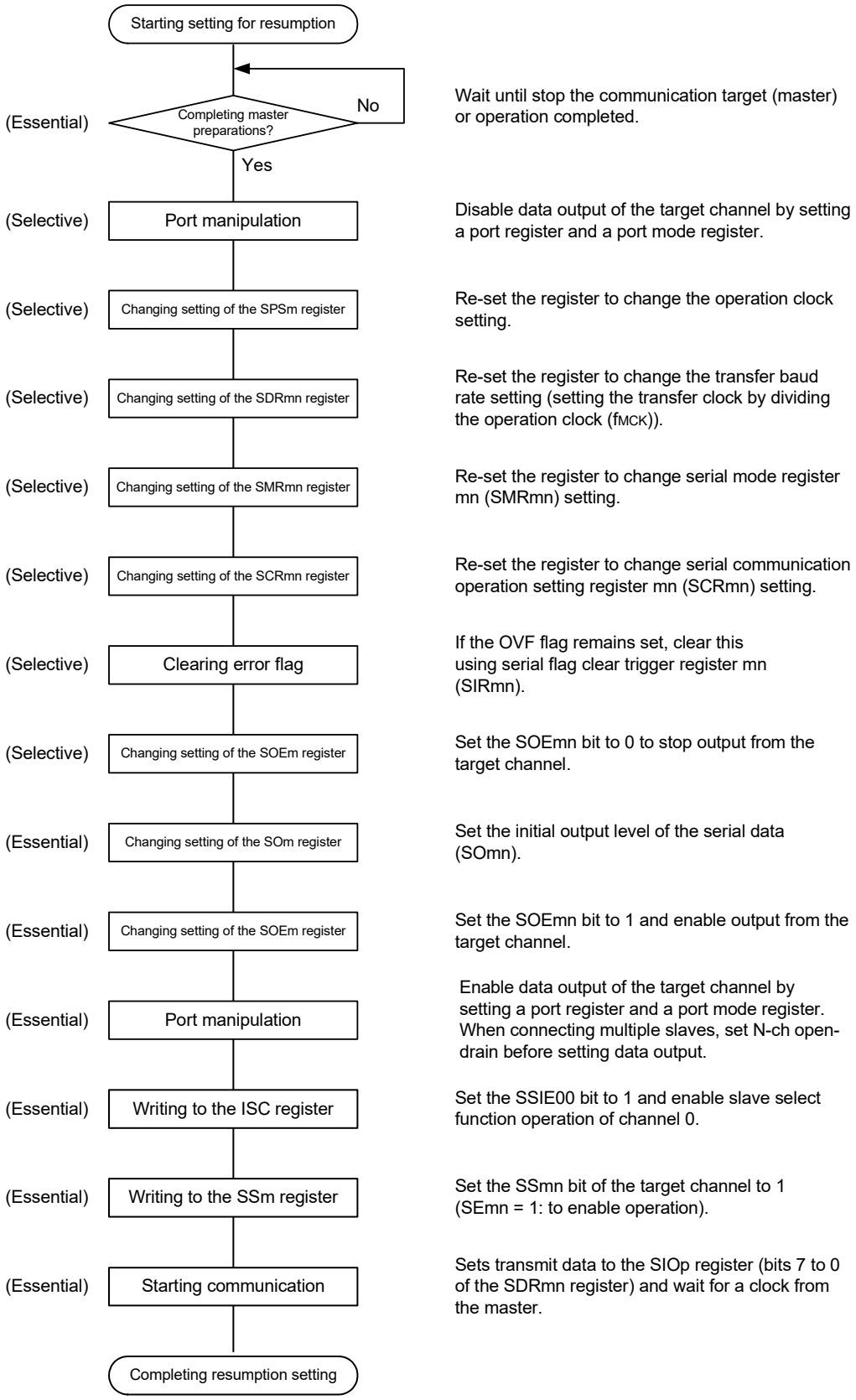

Remark 1. If PER0 is rewritten while stopping the master transmission and the clock supply is stopped, wait until the transmission target (master) stops or transmission finishes, and then perform initialization instead of restarting the transmission.

Remark 2. m: Unit number (m = 0), n: Channel number (n = 0), p: CSI number (p = 00)

(3) Processing flow (in single-transmission mode)

Figure 19 - 86 Timing Chart of Slave Transmission (in Single-Transmission Mode)
(Type 1: DAPmn = 0, CKPmn = 0)

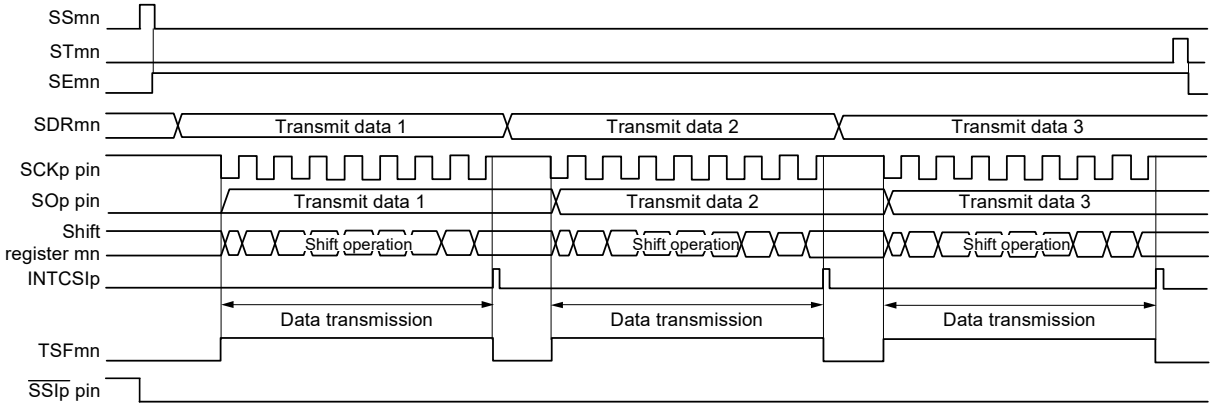

Remark m: Unit number (m = 0), n: Channel number (n = 0), p: CSI number (p = 00)

Figure 19 - 87 Flowchart of Slave Transmission (in Single-Transmission Mode)

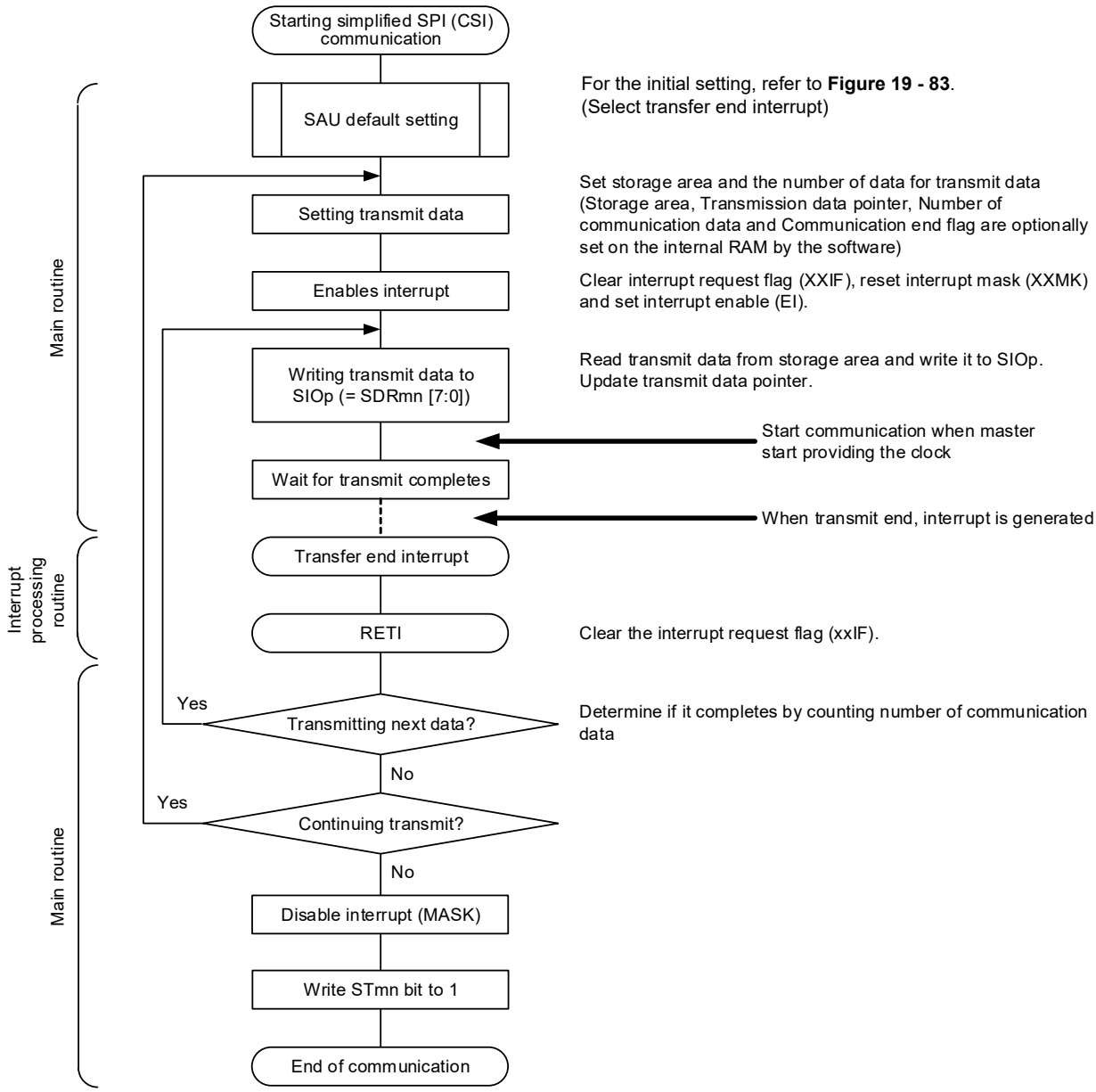

Remark m: Unit number (m = 0), n: Channel number (n = 0), p: CSI number (p = 00)

(4) Processing flow (in continuous transmission mode)

Figure 19 - 88 Timing Chart of Slave Transmission (in Continuous Transmission Mode)
(Type 1: DAPmn = 0, CKPmn = 0)

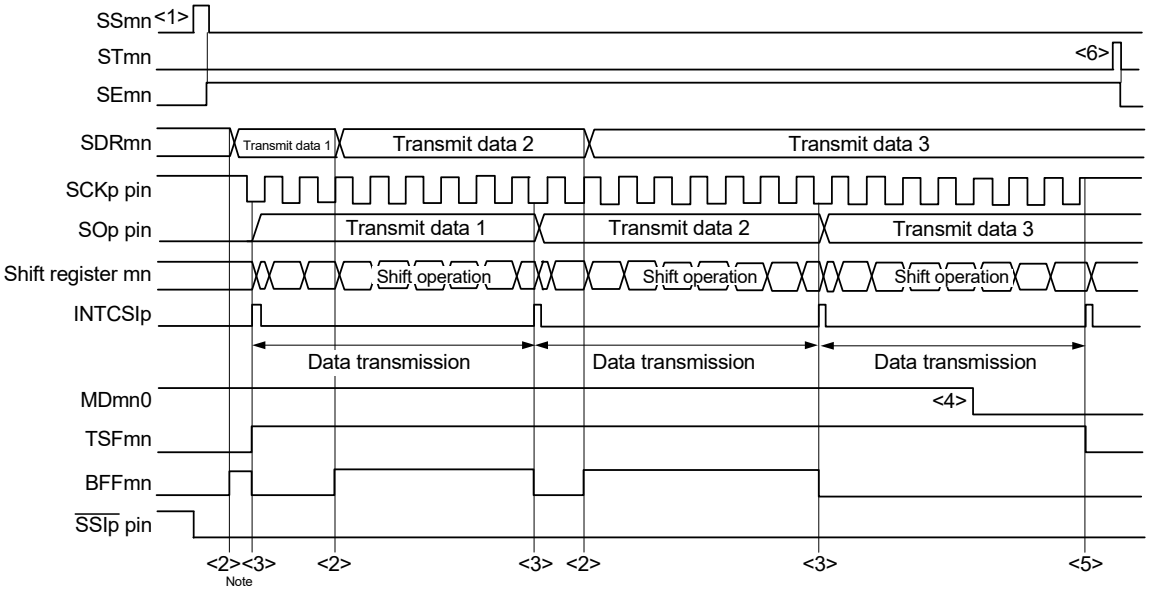

Note If transmit data is written to the SDRmn register while the BFFmn bit of serial status register mn (SSRmn) is 1 (valid data is stored in serial data register mn (SDRmn)), the transmit data is overwritten.

Caution **The MDmn0 bit of serial mode register mn (SMRmn) can be rewritten even during operation. However, rewrite it before transfer of the last bit is started.**

Remark m: Unit number (m = 0), n: Channel number (n = 0), p: CSI number (p = 00)

Figure 19 - 89 Flowchart of Slave Transmission (in Continuous Transmission Mode)

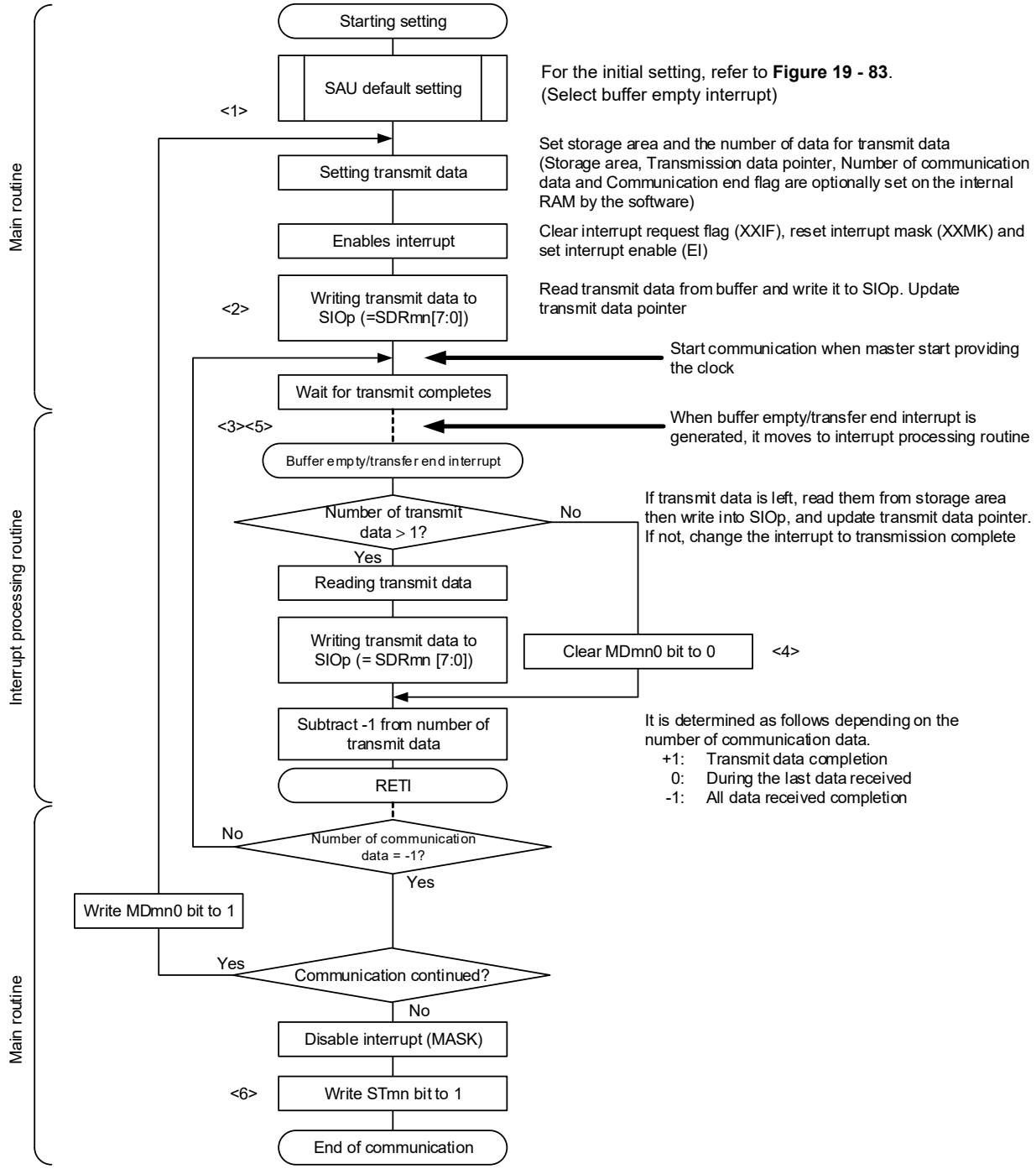

Remark 1. <1> to <6> in the figure correspond to <1> to <6> in Figure 19 - 88 Timing Chart of Slave Transmission (in Continuous Transmission Mode) (Type 1: DAPmn = 0, CKPmn = 0).

Remark 2. m: Unit number (m = 0), n: Channel number (n = 0), p: CSI number (p = 00)

19.6.2 Slave reception

Slave reception is that the RL78 microcontroller receives data from another device in the state of a transfer clock being input from another device.

Slave select input function	CSI00
Target channel	Channel 0 of SAU0
Pins used	SCK00, SI00, $\overline{\text{SSI00}}$
Interrupt	INTCSI00
	Transfer end interrupt only (Setting the buffer empty interrupt is prohibited.)
Error detection flag	Overrun error detection flag (OVFmn) only
Transfer data length	7 or 8 bits
Transfer rate	Max. f_{MCK}/6 [Hz]Notes 1, 2
Data phase	Selectable by the DAPmn bit of the SCRmn register • DAPmn = 0: Data input starts from the start of the operation of the serial clock. • DAPmn = 1: Data input starts half a clock before the start of the serial clock operation.
Clock phase	Selectable by the CKPmn bit of the SCRmn register • CKPmn = 0: Non-reverse • CKPmn = 1: Reverse
Data direction	MSB or LSB first
Slave select input function	Slave select input function operation selectable

Note 1. Because the external serial clock input to the SCK00 pin is sampled internally and used, the fastest transfer rate is f_{MCK}/6 [Hz].

Note 2. Use this operation within a range that satisfies the conditions above and the peripheral functions characteristics in the electrical specifications (see **CHAPTER 37** or **CHAPTER 38 ELECTRICAL SPECIFICATIONS**).

Remark 1. f_{MCK}: Operation clock frequency of target channel

Remark 2. m: Unit number (m = 0), n: Channel number (n = 0)

(1) Register setting

Figure 19 - 90 Example of Contents of Registers for Slave Reception of Slave Select Input Function (CSI00) (1/2)

(a) Serial mode register mn (SMRmn)

	15	14	13	12	11	10	9	8	7	6	5	4	3	2	1	0
SMRmn	CKSmn 0/1	CCSmn 1	0	0	0	0	0	STSmn 0	0	SISmn0 0	1	0	0	MDmn2 0	MDmn1 0	MDmn0 0

Operation clock (f_{MCK}) of channel n
0: Prescaler output clock CKm0 set by the SPSm register
1: Prescaler output clock CKm1 set by the SPSm register

Interrupt source of channel n
0: Transfer end interrupt

(b) Serial communication operation setting register mn (SCRmn)

	15	14	13	12	11	10	9	8	7	6	5	4	3	2	1	0
SCRmn	TXEmn 0	RXEmn 1	DAPmn 0/1	CKPmn 0/1	0	EOCmn 0	PTCmn1 0	PTCmn0 0	DIRmn 0/1	0	SLCmn1 0	SLCmn0 0	0	1	DLSmn1 1	DLSmn0 0/1

Selection of the data and clock phase (For details about the setting, see **19.3 Registers Controlling Serial Array Unit**)

Selection of data transfer sequence
0: Inputs/outputs data with MSB first
1: Inputs/outputs data with LSB first

Setting of data length
0: 7-bit data length
1: 8-bit data length

(c) Serial data register mn (SDRmn) (lower 8 bits: SIOp)

	15	14	13	12	11	10	9	8	7	6	5	4	3	2	1	0
SDRmn	0000000 Baud rate setting							0	Receive data							

SIOp

(d) Serial output register m (SOm)... The Register that not used in this mode.

	15	14	13	12	11	10	9	8	7	6	5	4	3	2	1	0
SOm	0	0	0	0	CKOm3 ×	CKOm2 ×	CKOm1 ×	CKOm0 ×	0	0	0	0	SOm3 ×	SOm2 ×	SOm1 ×	SOm0 ×

(e) Serial output enable register m (SOEm)... The Register that not used in this mode.

	15	14	13	12	11	10	9	8	7	6	5	4	3	2	1	0
SOEm	0	0	0	0	0	0	0	0	0	0	0	0	SOEm3 ×	SOEm2 ×	SOEm1 ×	SOEm0 ×

Remark 1. m: Unit number (m = 0), n: Channel number (n = 0), p: CSI number (p = 00)

Remark 2. ■: Setting is fixed in the simplified SPI (CSI) slave reception mode,
▒: Setting disabled (set to the initial value)
×: Bit that cannot be used in this mode (set to the initial value when not used in any mode)
0/1: Set to 0 or 1 depending on the usage of the user

Figure 19 - 91 Example of Contents of Registers for Slave Reception of Slave Select Input Function (CSI00) (2/2)

(f) Serial channel start register m (SSm)... Sets only the bits of the target channel to 1.

	15	14	13	12	11	10	9	8	7	6	5	4	3	2	1	0
SSm	0	0	0	0	0	0	0	0	0	0	0	0	SSm3 ×	SSm2 ×	SSm1 ×	SSm0 0/1

(g) Input switch control register (ISC)... $\overline{\text{SSI00}}$ input setting in CSI00 slave channel (channel 0 of unit 0).

	7	6	5	4	3	2	1	0
ISC	SSIE00 0/1	0	0	0	0	0	ISC1 0/1	ISC0 0/1

0: Disables the input value of the $\overline{\text{SSI00}}$ pin
1: Enables the input value of the $\overline{\text{SSI00}}$ pin

Remark 1. m: Unit number (m = 0), n: Channel number (n = 0), p: CSI number (p = 00)

Remark 2. ■: Setting disabled (set to the initial value)
×: Bit that cannot be used in this mode (set to the initial value when not used in any mode)
0/1: Set to 0 or 1 depending on the usage of the user

(2) Operation procedure

Figure 19 - 92 Initial Setting Procedure for Slave Reception

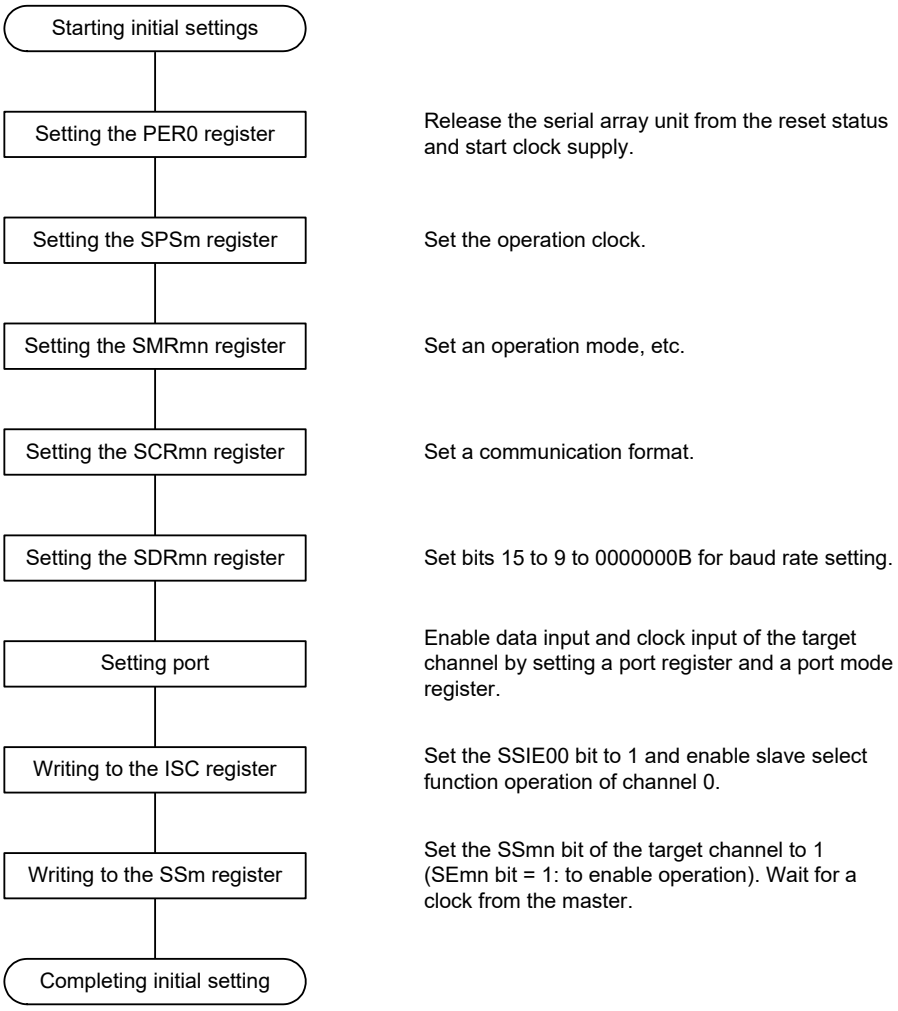

Figure 19 - 93 Procedure for Stopping Slave Reception

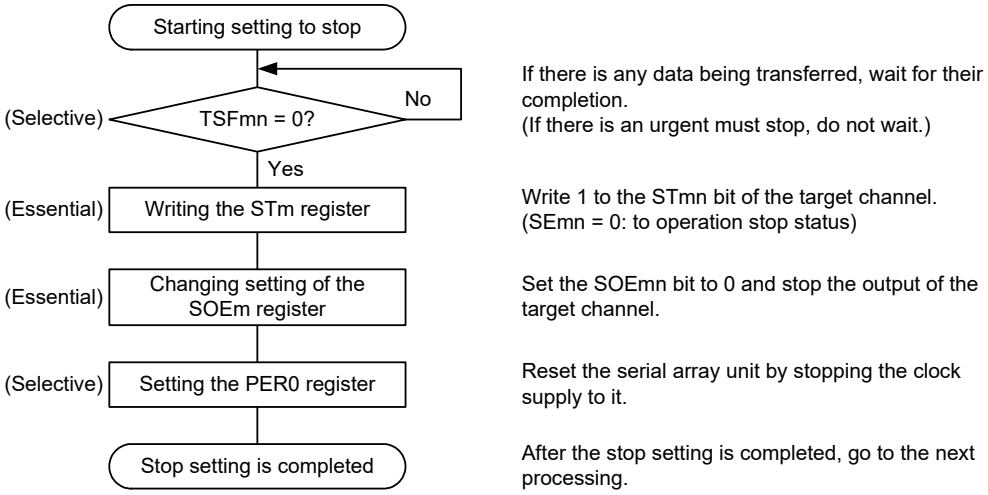

Remark m: Unit number (m = 0), n: Channel number (n = 0), p: CSI number (p = 00)

Figure 19 - 94 Procedure for Resuming Slave Reception

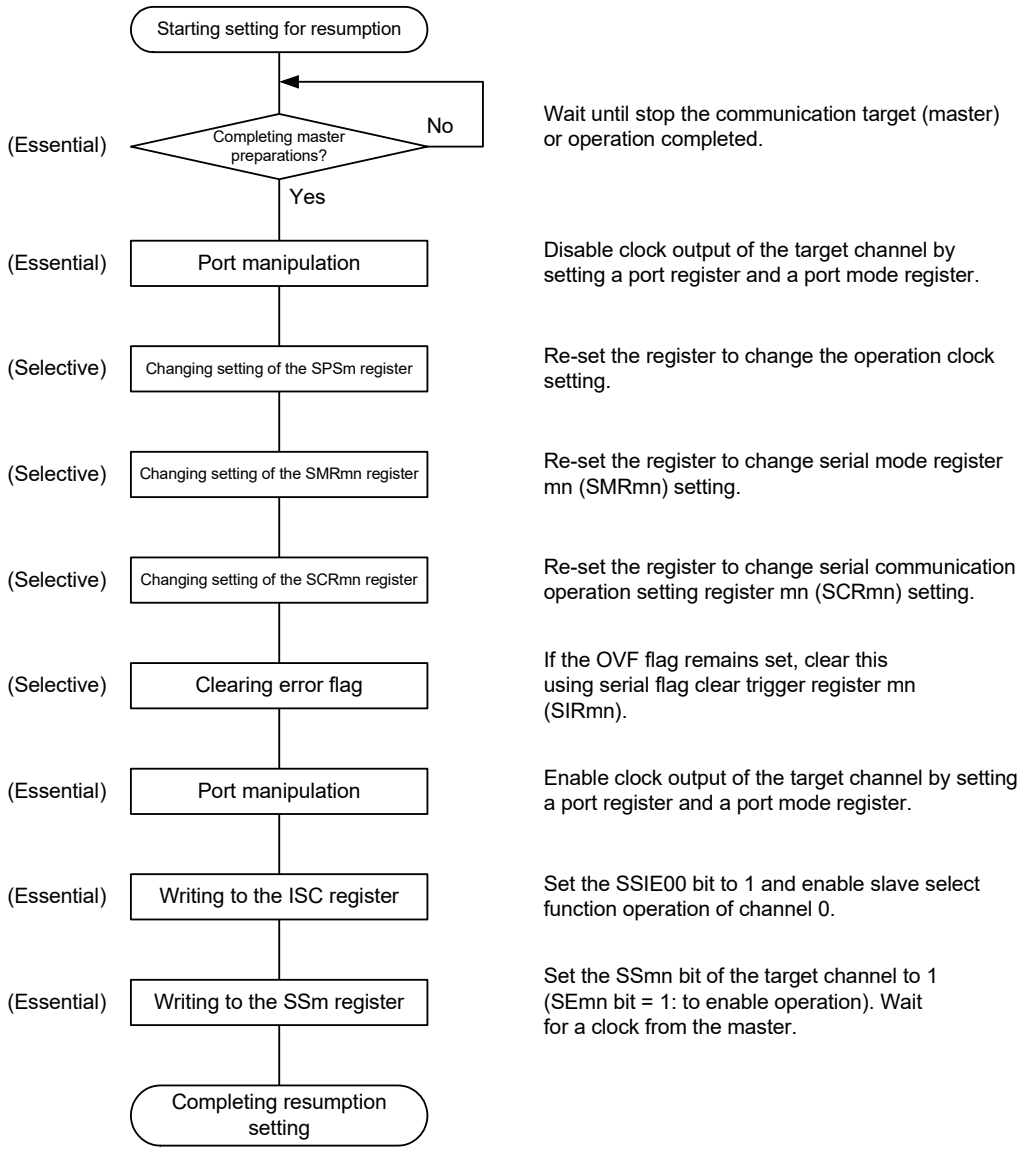

Remark m: Unit number (m = 0), n: Channel number (n = 0), p: CSI number (p = 00)

(3) Processing flow (in single-reception mode)

Figure 19 - 95 Timing Chart of Slave Reception (in Single-Reception Mode)
(Type 1: DAPmn = 0, CKPmn = 0)

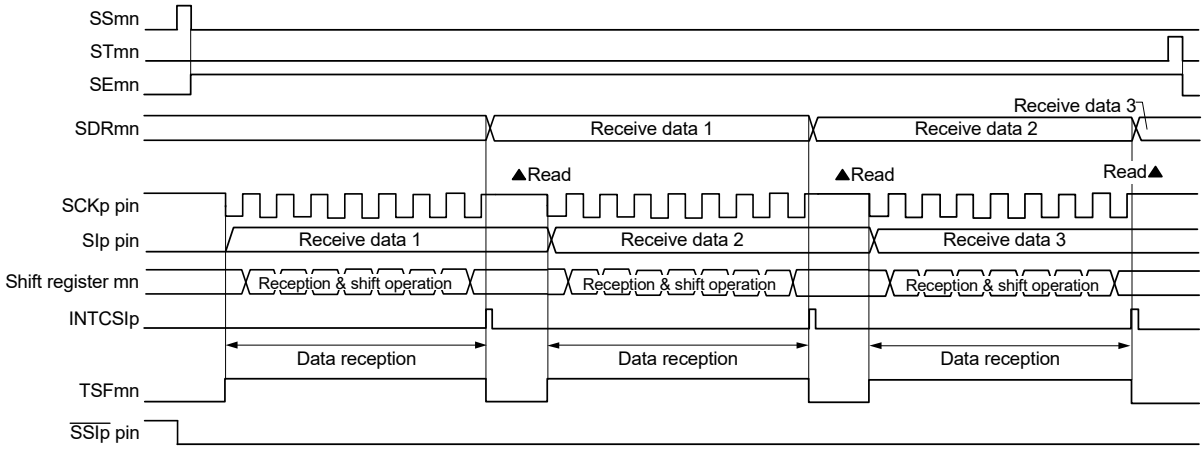

Remark m: Unit number (m = 0), n: Channel number (n = 0), p: CSI number (p = 00)

Figure 19 - 96 Flowchart of Slave Reception (in Single-Reception Mode)

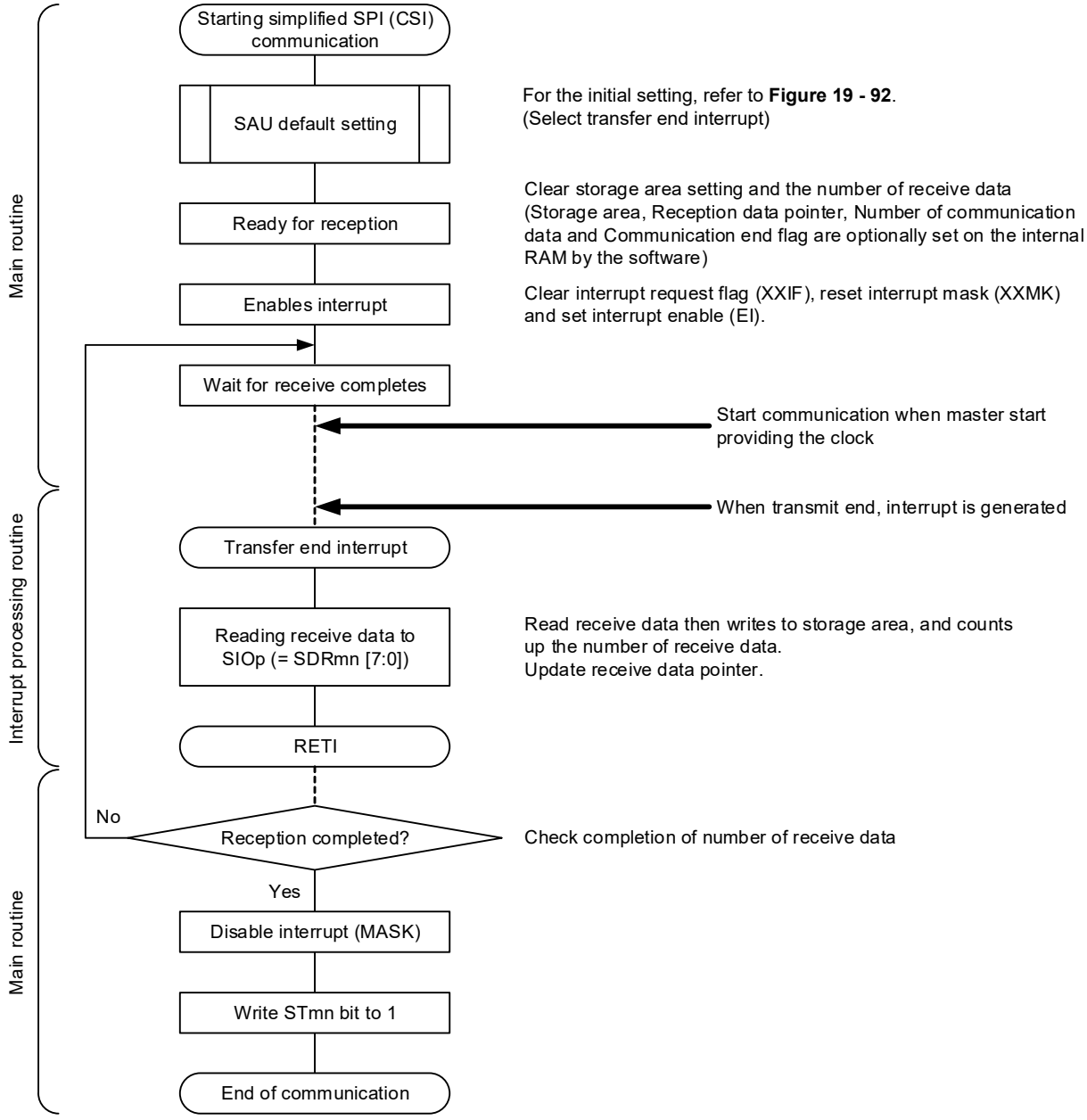

19.6.3 Slave transmission/reception

Slave transmission/reception is that the RL78 microcontroller transmits/receives data to/from another device in the state of a transfer clock being input from another device.

Slave select input function	CSI00
Target channel	Channel 0 of SAU0
Pins used	SCK00, SI00, SO00, $\overline{\text{SSI00}}$
Interrupt	INTCSI00
	Transfer end interrupt (in single-transfer mode) or buffer empty interrupt (in continuous transfer mode) can be selected.
Error detection flag	Overrun error detection flag (OVFmn) only
Transfer data length	7 or 8 bits
Transfer rate	Max. $f_{MCK}/6$ [Hz]Notes 1, 2
Data phase	Selectable by the DAPmn bit of the SCRmn register • DAPmn = 0: Data I/O starts from the start of the operation of the serial clock. • DAPmn = 1: Data I/O starts half a clock before the start of the serial clock operation.
Clock phase	Selectable by the CKPmn bit of the SCRmn register • CKPmn = 0: Non-reverse • CKPmn = 1: Reverse
Data direction	MSB or LSB first
Slave select input function	Slave select input function operation selectable

Note 1. Because the external serial clock input to the SCK00 pin is sampled internally and used, the fastest transfer rate is $f_{MCK}/6$ [Hz].

Note 2. Use this operation within a range that satisfies the conditions above and the peripheral functions characteristics in the electrical specifications (see **CHAPTER 37** or **CHAPTER 38 ELECTRICAL SPECIFICATIONS**).

Remark 1. f_{MCK}: Operation clock frequency of target channel

Remark 2. m: Unit number (m = 0), n: Channel number (n = 0)

(1) Register setting

Figure 19 - 97 Example of Contents of Registers for Slave Transmission/Reception of Slave Select Input Function (CSI00) (1/2)

(a) Serial mode register mn (SMRmn)

	15	14	13	12	11	10	9	8	7	6	5	4	3	2	1	0
SMRmn	CKSmn 0/1	CCSmn 1	0	0	0	0	0	STSmn 0	0	SISmn0 0	1	0	0	MDmn2 0	MDmn1 0	MDmn0 0/1

Operation clock (f_{MCK}) of channel n
0: Prescaler output clock CKm0 set by the SPSm register
1: Prescaler output clock CKm1 set by the SPSm register

Interrupt source of channel n
0: Transfer end interrupt
1: Buffer empty interrupt

(b) Serial communication operation setting register mn (SCRmn)

	15	14	13	12	11	10	9	8	7	6	5	4	3	2	1	0
SCRmn	TXEmn 1	RXEmn 1	DAPmn 0/1	CKPmn 0/1	0	EOCmn 0	PTCmn1 0	PTCmn0 0	DIRmn 0/1	0	SLCmn1 0	SLCmn0 0	0	1	DLSmn1 1	DLSmn0 0/1

Selection of the data and clock phase (For details about the setting, see **19.3 Registers Controlling Serial Array Unit**)

Selection of data transfer sequence
0: Inputs/outputs data with MSB first
1: Inputs/outputs data with LSB first

Setting of data length
0: 7-bit data length
1: 8-bit data length

(c) Serial data register mn (SDRmn) (lower 8 bits: SIOp)

	15	14	13	12	11	10	9	8	7	6	5	4	3	2	1	0
SDRmn	0000000 Baud rate setting							0	Transmit data setting/receive data register							

SIOp

(d) Serial output register m (SOm)... Sets only the bits of the target channel.

	15	14	13	12	11	10	9	8	7	6	5	4	3	2	1	0
SOm	0	0	0	0	CKOm3 ×	CKOm2 ×	CKOm1 ×	CKOm0 ×	0	0	0	0	SOm3 ×	SOm2 ×	SOm1 ×	SOm0 0/1

(e) Serial output enable register m (SOEm)... Sets only the bits of the target channel to 1.

	15	14	13	12	11	10	9	8	7	6	5	4	3	2	1	0
SOEm	0	0	0	0	0	0	0	0	0	0	0	0	SOEm3 ×	SOEm2 ×	SOEm1 ×	SOEm0 0/1

Caution Be sure to set transmit data to the SIOp register before the clock from the master is started.

Remark 1. m: Unit number (m = 0), n: Channel number (n = 0), p: CSI number (p = 00)

Remark 2. ■: Setting is fixed in the simplified SPI (CSI) slave transmission/reception mode
■: Setting disabled (set to the initial value)
×: Bit that cannot be used in this mode (set to the initial value when not used in any mode)
0/1: Set to 0 or 1 depending on the usage of the user

Figure 19 - 98 Example of Contents of Registers for Slave Transmission/Reception of Slave Select Input Function (CSI00) (2/2)

(f) Serial channel start register m (SSm)... Sets only the bits of the target channel to 1.

	15	14	13	12	11	10	9	8	7	6	5	4	3	2	1	0
SSm	0	0	0	0	0	0	0	0	0	0	0	0	SSm3 ×	SSm2 ×	SSm1 ×	SSm0 0/1

(g) Input switch control register (ISC)... $\overline{\text{SSI00}}$ input setting in CSI00 slave channel (channel 0 of unit 0).

	7	6	5	4	3	2	1	0
ISC	SSIE00 0/1	0	0	0	0	0	ISC1 0/1	ISC0 0/1

0: Disables the input value of the $\overline{\text{SSI00}}$ pin
1: Enables the input value of the $\overline{\text{SSI00}}$ pin

Remark 1. m: Unit number (m = 0), n: Channel number (n = 0), p: CSI number (p = 00)

Remark 2. ■: Setting disabled (set to the initial value)
×: Bit that cannot be used in this mode (set to the initial value when not used in any mode)
0/1: Set to 0 or 1 depending on the usage of the user

(2) Operation procedure

Figure 19 - 99 Initial Setting Procedure for Slave Transmission/Reception

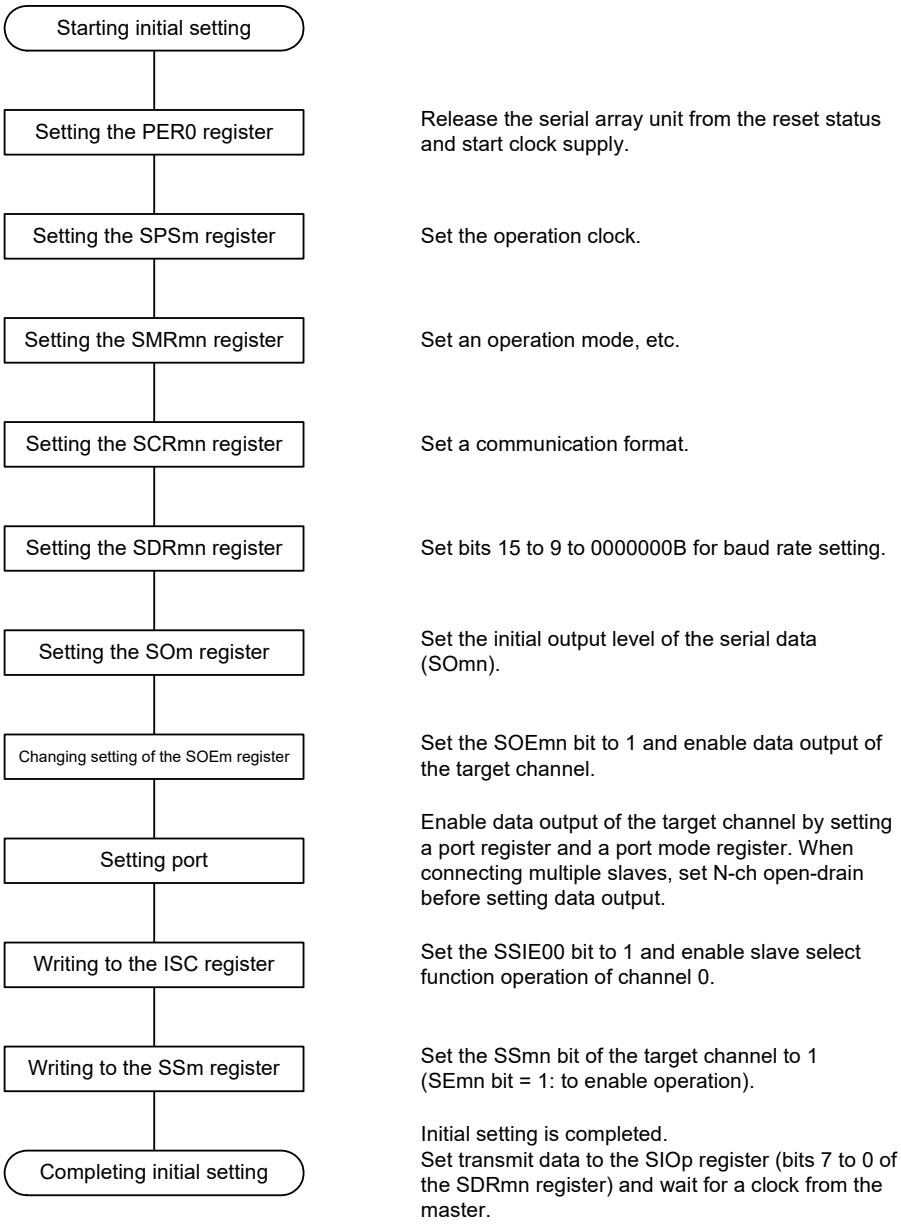

Caution **Be sure to set transmit data to the SIOp register before the clock from the master is started.**

Remark m: Unit number (m = 0), n: Channel number (n = 0), p: CSI number (p = 00)

Figure 19 - 100 Procedure for Stopping Slave Transmission/Reception

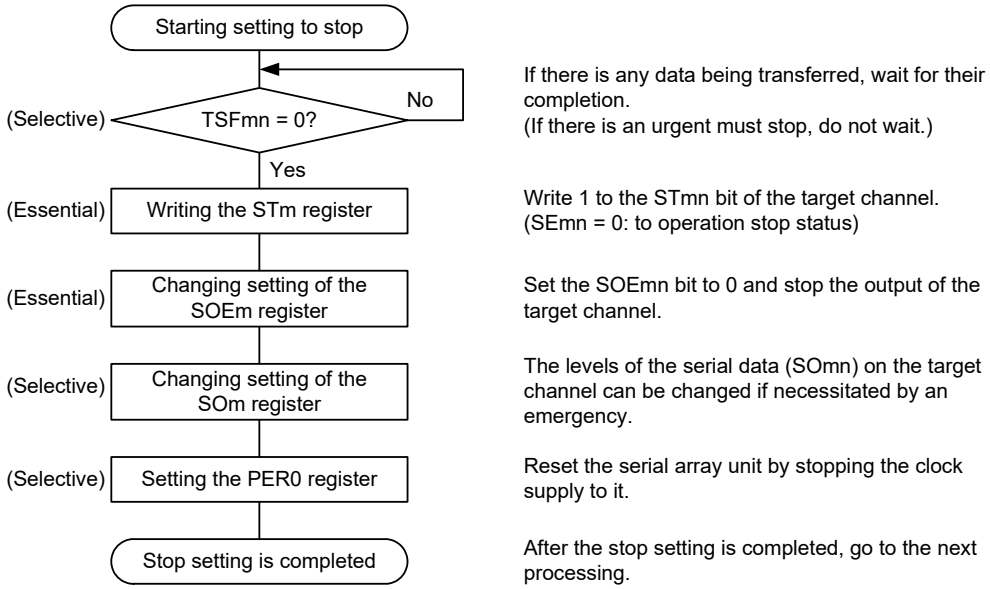

Remark m: Unit number (m = 0), n: Channel number (n = 0), p: CSI number (p = 00)

Figure 19 - 101 Procedure for Resuming Slave Transmission/Reception

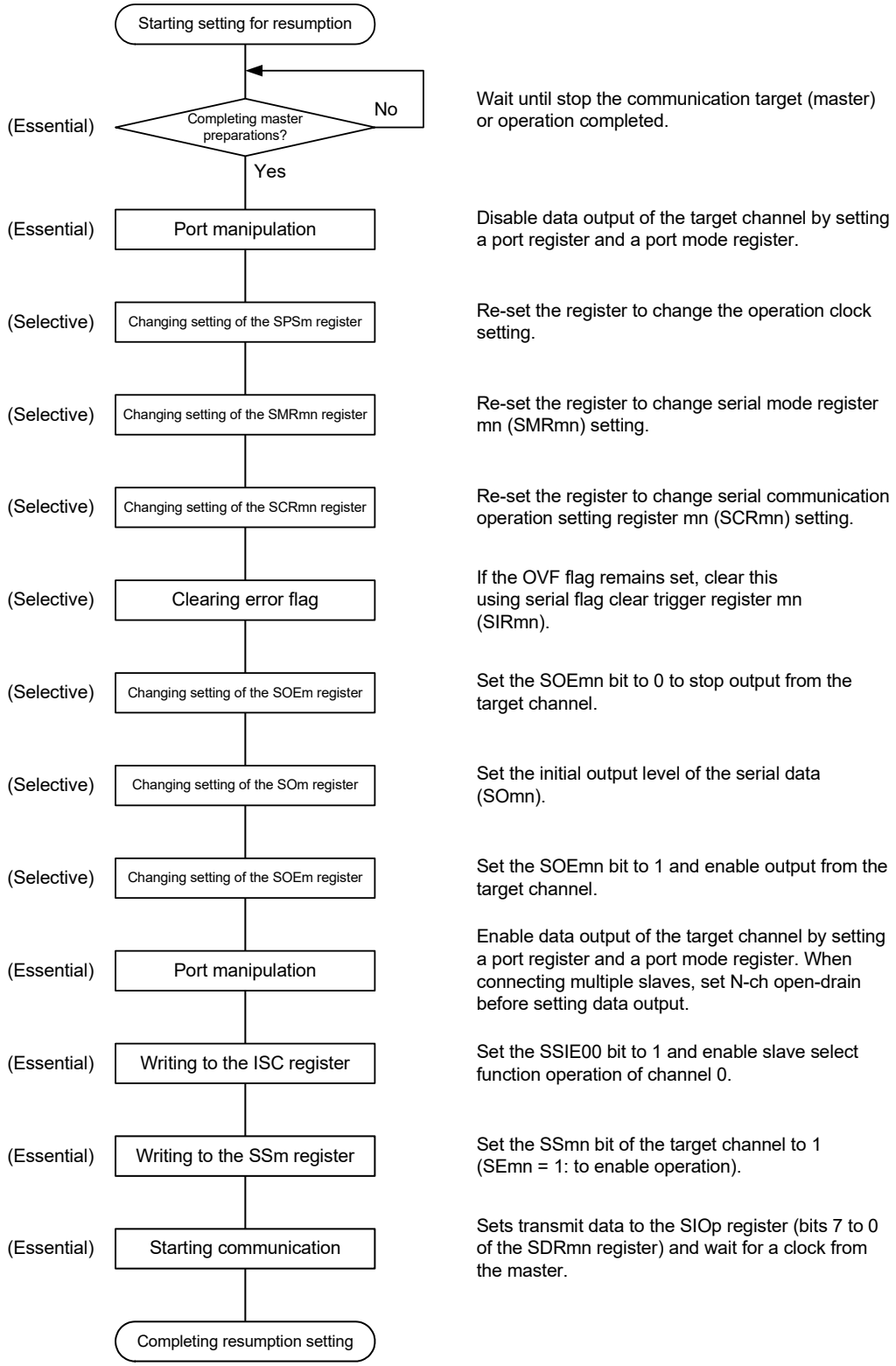

Caution 1. Be sure to set transmit data to the SIOp register before the clock from the master is started.

Caution 2. If PER0 is rewritten while stopping the master transmission and the clock supply is stopped, wait until the transmission target (master) stops or transmission finishes, and then perform initialization instead of restarting the transmission.

(3) Processing flow (in single-transmission/reception mode)

Figure 19 - 102 Timing Chart of Slave Transmission/Reception (in Single-Transmission/Reception Mode) (Type 1: DAPmn = 0, CKPmn = 0)

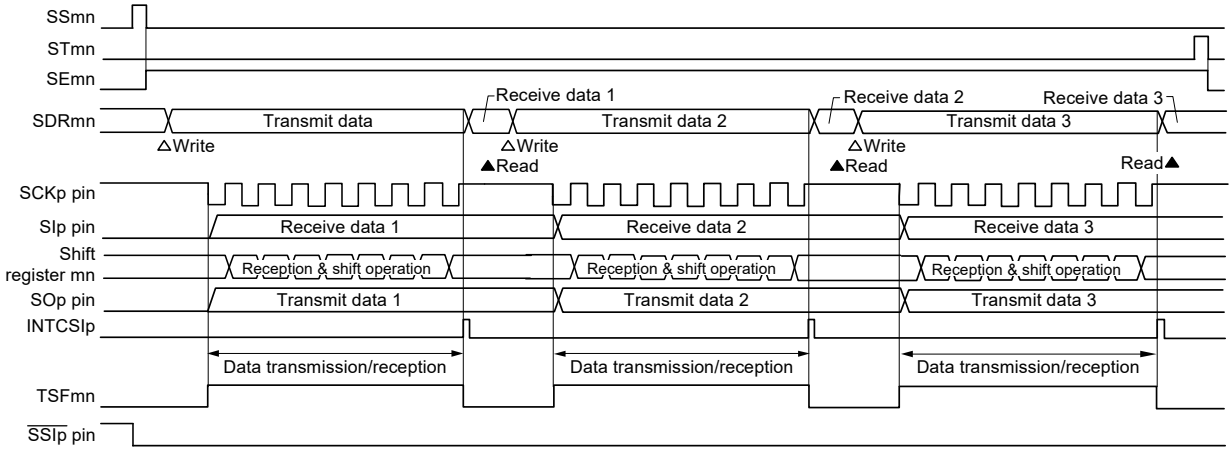

Remark m: Unit number (m = 0), n: Channel number (n = 0), p: CSI number (p = 00)

Figure 19 - 103 Flowchart of Slave Transmission/Reception (in Single- Transmission/Reception Mode)

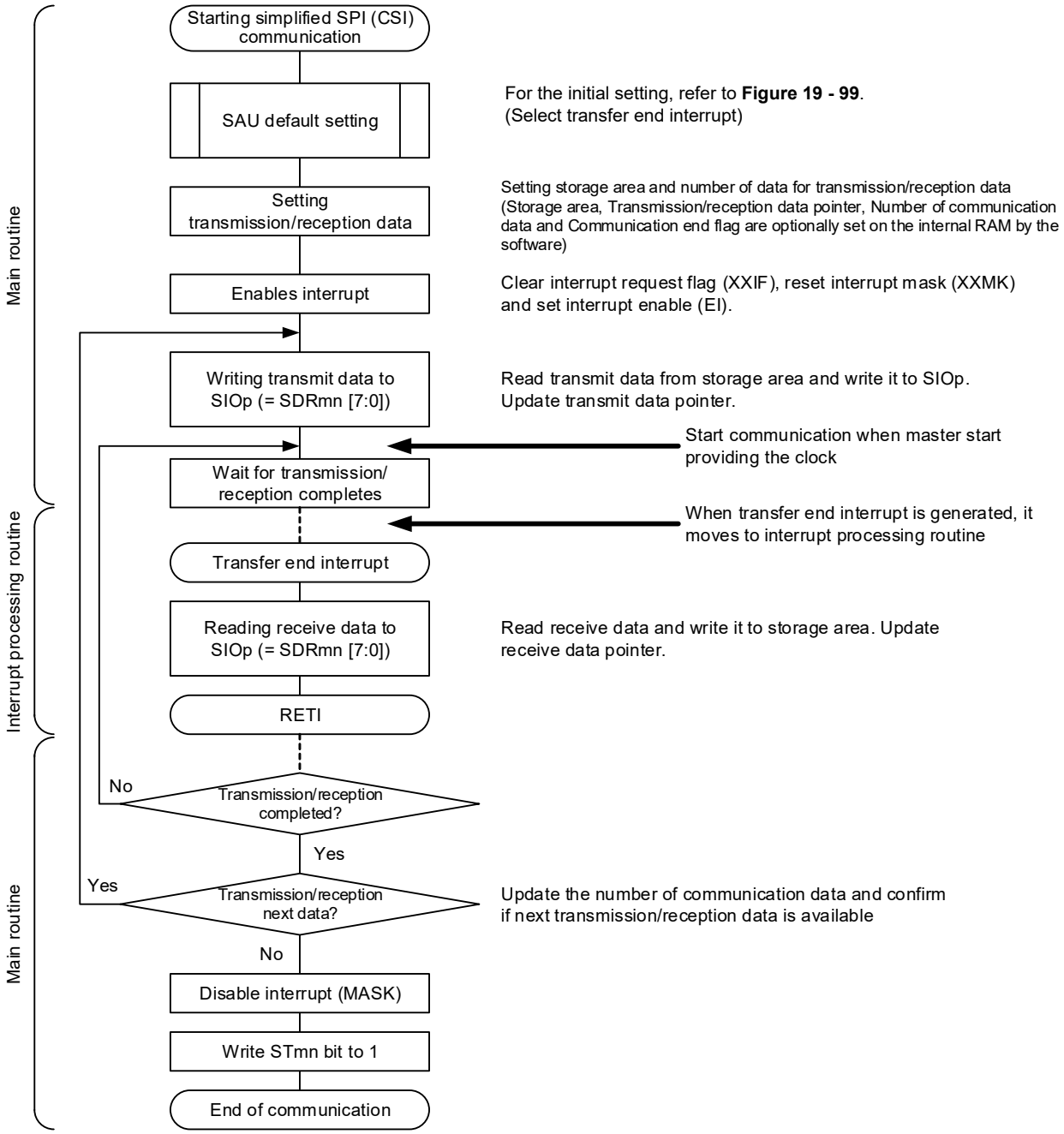

Caution **Be sure to set transmit data to the SIOp register before the clock from the master is started.**

Remark m: Unit number (m = 0), n: Channel number (n = 0), p: CSI number (p = 00)

(4) Processing flow (in continuous transmission/reception mode)

Figure 19 - 104 Timing Chart of Slave Transmission/Reception (in Continuous Transmission/Reception Mode) (Type 1: DAPmn = 0, CKPmn = 0)

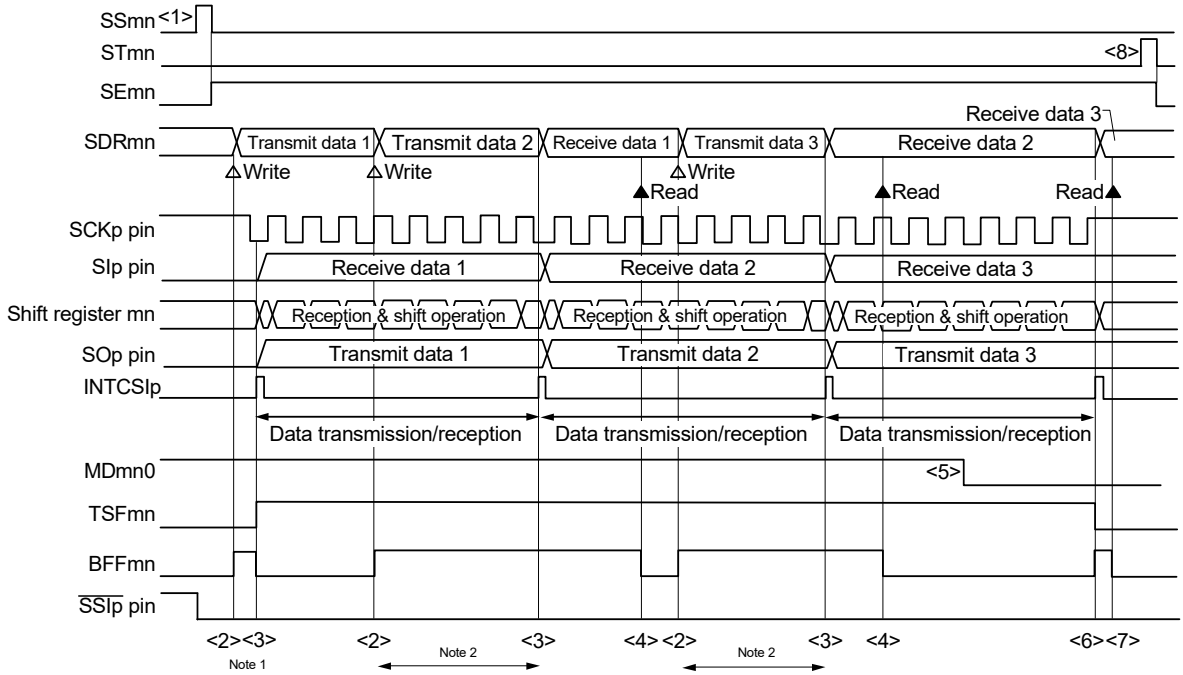

Note 1. If transmit data is written to the SDRmn register while the BFFmn bit of serial status register mn (SSRmn) is 1 (valid data is stored in serial data register mn (SDRmn)), the transmit data is overwritten.

Note 2. The transmit data can be read by reading the SDRmn register during this period. At this time, the transfer operation is not affected.

Caution **The MDmn0 bit of serial mode register mn (SMRmn) can be rewritten even during operation. However, rewrite it before transfer of the last bit is started, so that it has been rewritten before the transfer end interrupt of the last transmit data.**

Remark 1. <1> to <8> in the figure correspond to <1> to <8> in Figure 19 - 105 Flowchart of Slave Transmission/Reception (in Continuous Transmission/Reception Mode).

Remark 2. m: Unit number (m = 0), n: Channel number (n = 0), p: CSI number (p = 00)

Figure 19 - 105 Flowchart of Slave Transmission/Reception (in Continuous Transmission/Reception Mode)

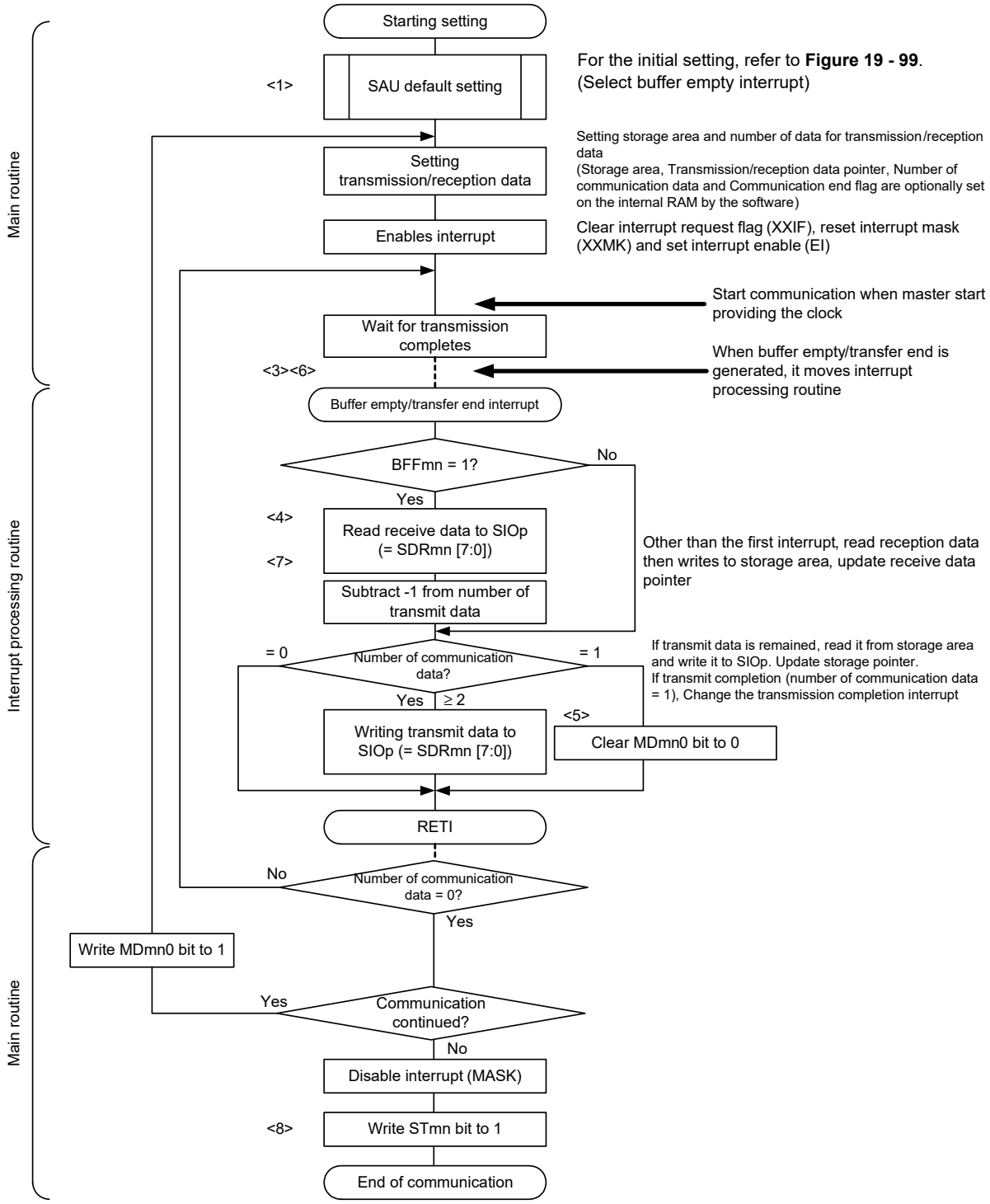

Caution **Be sure to set transmit data to the SIOp register before the clock from the master is started.**

Remark 1. <1> to <8> in the figure correspond to <1> to <8> in Figure 19 - 104 Timing Chart of Slave Transmission/Reception (in Continuous Transmission/Reception Mode) (Type 1: DAPmn = 0, CKPmn = 0).

Remark 2. m: Unit number (m = 0), n: Channel number (n = 0), p: CSI number (p = 00)

19.6.4 Calculating transfer clock frequency

The transfer clock frequency for slave select input function (CSI00) communication can be calculated by the following expressions.

(1) Slave

(Transfer clock frequency) = {Frequency of serial clock (SCK) supplied by master}[Note] [Hz]

Note The permissible maximum transfer clock frequency is $f_{MCK}/6$.

Remark m: Unit number (m = 0), n: Channel number (n = 0), p: CSI number (p = 00)

Table 19 - 6 Selection of Operation Clock For Slave Select Input Function

SMRmn Register	SPSm Register								Operation Clock (f_{MCK})Note	
CKSmn	PRS m13	PRS m12	PRS m11	PRS m10	PRS m03	PRS m02	PRS m01	PRS m00		f_{CLK} = 32 MHz
0	×	×	×	×	0	0	0	0	f_{CLK}	32 MHz
	×	×	×	×	0	0	0	1	$f_{CLK}/2$	16 MHz
	×	×	×	×	0	0	1	0	$f_{CLK}/2^2$	8 MHz
	×	×	×	×	0	0	1	1	$f_{CLK}/2^3$	4 MHz
	×	×	×	×	0	1	0	0	$f_{CLK}/2^4$	2 MHz
	×	×	×	×	0	1	0	1	$f_{CLK}/2^5$	1 MHz
	×	×	×	×	0	1	1	0	$f_{CLK}/2^6$	500 kHz
	×	×	×	×	0	1	1	1	$f_{CLK}/2^7$	250 kHz
	×	×	×	×	1	0	0	0	$f_{CLK}/2^8$	125 kHz
	×	×	×	×	1	0	0	1	$f_{CLK}/2^9$	62.5 kHz
	×	×	×	×	1	0	1	0	$f_{CLK}/2^{10}$	31.25 kHz
	×	×	×	×	1	0	1	1	$f_{CLK}/2^{11}$	15.63 kHz
	×	×	×	×	1	1	0	0	$f_{CLK}/2^{12}$	7.81 kHz
	×	×	×	×	1	1	0	1	$f_{CLK}/2^{13}$	3.91 kHz
	×	×	×	×	1	1	1	0	$f_{CLK}/2^{14}$	1.95 kHz
	×	×	×	×	1	1	1	1	$f_{CLK}/2^{15}$	977 Hz

Note When changing the clock selected for f_{CLK} (by changing the system clock control register (CKC) value), do so after having stopped (serial channel stop register m (STm) = 000FH) the operation of the serial array unit (SAU).

Remark 1. ×: Don't care

Remark 2. m: Unit number (m = 0), n: Channel number (n = 0)

19.6.5 Procedure for processing errors that occurred during slave select input function communication

The procedure for processing errors that occurred during slave select input function communication is described in Figure 19 - 106.

Figure 19 - 106 Processing Procedure in Case of Overrun Error

Software Manipulation	Hardware Status	Remark
Reads serial data register mn (SDRmn). →	The BFFmn bit of the SSRmn register is set to 0 and channel n is enabled to receive data.	This is to prevent an overrun error if the next reception is completed during error processing.
Reads serial status register mn (SSRmn).		Error type is identified and the read value is used to clear error flag.
Writes 1 to serial flag clear trigger register mn (SIRmn). →	Error flag is cleared.	Error can be cleared only during reading, by writing the value read from the SSRmn register to the SIRmn register without modification.

Remark m: Unit number (m = 0), n: Channel number (n = 0)

19.7 Operation of UART (UART0 to UART2) Communication

This is a start-stop synchronization function using two lines: serial data transmission (TxD) and serial data reception (RxD) lines. By using these two communication lines, each data frame, which consist of a start bit, data, parity bit, and stop bit, is transferred asynchronously (using the internal baud rate) between the microcontroller and the other communication party. Full-duplex UART communication can be performed by using a channel dedicated to transmission (even-numbered channel) and a channel dedicated to reception (odd-numbered channel). The LIN-bus can be implemented by using UART0, timer array unit 0 (channel 3), and an external interrupt (INTP0).

[Data transmission/reception]
- Data length of 7, 8, or 9 bits[Note]
- Select the MSB/LSB first
- Level setting of transmit/receive data (selecting whether to reverse the level)
- Parity bit appending and parity check functions
- Stop bit appending, stop bit check function

[Interrupt function]
- Transfer end interrupt/buffer empty interrupt
- Error interrupt in case of framing error, parity error, or overrun error

[Error detection flag]
- Framing error, parity error, or overrun error

In addition, UARTs of following channels supports the SNOOZE mode. When RxD input is detected while in the STOP mode, the SNOOZE mode makes data reception that does not require the CPU possible. UART0 can only be specified when FRQSEL4 in the option byte (000C2H) = 0 in the SNOOZE mode.

The LIN-bus is accepted in UART0 (channels 0 and 1 of unit 0).

[LIN-bus functions]
- Wakeup signal detection
- Break field (BF) detection
- Sync field measurement, baud rate calculation

} Using the external interrupt (INTP0) and timer array unit 0 (channel 3)

Note UART0 can only be specified for the 9-bit data length.

UART0 uses channels 0 and 1 of SAU0.
UART1 uses channels 2 and 3 of SAU0.
UART2 uses channels 0 and 1 of SAU1.

• 24, 32, 36-pin products

Unit	Channel	Used as simplified SPI (CSI)	Used as UART	Used as Simplified I²C
0	0	CSI00 (supporting slave select input function)	UART0 (supporting LIN-bus)	IIC00
	1	—		—
	2	—	UART1	—
	3	CSI11		IIC11
1	0	CSI20	UART2	IIC20
	1	—		—

• 48-pin products

Unit	Channel	Used as simplified SPI (CSI)	Used as UART	Used as Simplified I²C
0	0	CSI00 (supporting slave select input function)	UART0 (supporting LIN-bus)	IIC00
	1	CSI01		IIC01
	2	—	UART1	—
	3	CSI11		IIC11
1	0	CSI20	UART2	IIC20
	1	CSI21		IIC21

• 64-pin products

Unit	Channel	Used as simplified SPI (CSI)	Used as UART	Used as Simplified I²C
0	0	CSI00 (supporting slave select input function)	UART0 (supporting LIN-bus)	IIC00
	1	CSI01		IIC01
	2	CSI10	UART1	IIC10
	3	CSI11		IIC11
1	0	CSI20	UART2	IIC20
	1	CSI21		IIC21

Select any function for each channel. Only the selected function is possible. If UART0 is selected for channels 0 and 1 of unit 0, for example, these channels cannot be used for CSI00 and IIC00.
At this time, however, channel 0, 1, or other channels of the same unit can be used for a function other than UART1, such as CSI00, UART0, and IIC00.

Caution When using a serial array unit for UART, both the transmitter side (even-numbered channel) and the receiver side (odd-numbered channel) can only be used for UART.

UART performs the following four types of communication operations.
• UART transmission (See **19.7.1**.)
• UART reception (See **19.7.2**.)
• LIN transmission (UART0 only) (See **19.8.1**.)
• LIN reception (UART0 only) (See **19.8.2**.)

19.7.1 UART transmission

UART transmission is an operation to transmit data from the RL78 microcontroller to another device asynchronously (start-stop synchronization).

Of two channels used for UART, the even channel is used for UART transmission.

UART	UART0	UART1	UART2
Target channel	Channel 0 of SAU0	Channel 2 of SAU0	Channel 0 of SAU1
Pins used	TxD0	TxD1	TxD2
Interrupt	INTST0	INTST1	INTST2
	Transfer end interrupt (in single-transfer mode) or buffer empty interrupt (in continuous transfer mode) can be selected.		
Error detection flag	None		
Transfer data length	7, 8, or 9 bits[Note 1]		
Transfer rate	Max. $f_{MCK}/6$ [bps] (SDRmn [15:9] = 2 or more), Min. $f_{CLK}/(2 \times 2^{15} \times 128)$ [bps][Note 2]		
Data phase	Non-reverse output (default: high level) Reverse output (default: low level)		
Parity bit	The following selectable • No parity bit • Appending 0 parity • Appending even parity • Appending odd parity		
Stop bit	The following selectable • Appending 1 bit • Appending 2 bits		
Data direction	MSB or LSB first		

Note 1. UART0 can only be specified for the 9-bit data length.

Note 2. Use this operation within a range that satisfies the conditions above and the peripheral functions characteristics in the electrical specifications (see **CHAPTER 37** or **CHAPTER 38 ELECTRICAL SPECIFICATIONS**).

Remark 1. f_{MCK}: Operation clock frequency of target channel
f_{CLK}: System clock frequency

Remark 2. m: Unit number (m = 0, 1), n: Channel number (n = 0, 2), mn = 00, 02, 10

(1) Register setting

Figure 19 - 107 Example of Contents of Registers for UART Transmission of UART (UART0 to UART2) (1/2)

(a) Serial mode register mn (SMRmn)

	15	14	13	12	11	10	9	8	7	6	5	4	3	2	1	0
SMRmn	CKSmn 0/1	CCSmn 0	0	0	0	0	0	0	0	0	1	0	0	MDmn2 0	MDmn1 1	MDmn0 0/1

Operation clock (f_{MCK}) of channel n
0: Prescaler output clock CKm0 set by the SPSm register
1: Prescaler output clock CKm1 set by the SPSm register

Interrupt source of channel n
0: Transfer end interrupt
1: Buffer empty interrupt

(b) Serial communication operation setting register mn (SCRmn)

	15	14	13	12	11	10	9	8	7	6	5	4	3	2	1	0
SCRmn	TXEmn 1	RXEmn 0	DAPmn 0	CKPmn 0	0	EOCmn 0	PTCmn1 0/1	PTCmn0 0/1	DIRmn 0/1	0	SLCmn1 0/1	SLCmn0 0/1	0	1	DLSmn1 0/1 Note 1	DLSmn0 0/1

Setting of parity bit
00B: No parity
01B: Appending 0 parity
10B: Appending Even parity
11B: Appending Odd parity

Selection of data transfer sequence
0: Inputs/outputs data with MSB first
1: Inputs/outputs data with LSB first

Setting of stop bit
01B: Appending 1 bit
10B: Appending 2 bits

(c) Serial data register mn (SDRmn) (lower 8 bits: TXDq)

	15	14	13	12	11	10	9	8	7	6	5	4	3	2	1	0
SDRmn	Baud rate setting							0 Note 2	Transmit data setting							

TXDq

(d) Serial output level register m (SOLm)... Sets only the bits of the target channel.

	15	14	13	12	11	10	9	8	7	6	5	4	3	2	1	0
SOLm	0	0	0	0	0	0	0	0	0	0	0	0	0	SOLm2 0/1	0	SOLm0 0/1

0: Non-reverse (normal) transmission
1: Reverse transmission

Note 1. Only provided for the SCR00 register. This bit is fixed to 1 for the other registers.

Note 2. When performing 9-bit communication, bits 0 to 8 of the SDRm0 register are used to specify the transmission data.
UART0 can only be specified for the 9-bit data length.

Remark 1. m: Unit number (m = 0, 1), n: Channel number (n = 0, 2), q: UART number (q = 0 to 2), mn = 00, 02, 10

Remark 2. ■: Setting is fixed in the UART transmission mode,
▒: Setting disabled (set to the initial value)
×: Bit that cannot be used in this mode (set to the initial value when not used in any mode)
0/1: Set to 0 or 1 depending on the usage of the user

Figure 19 - 108 Example of Contents of Registers for UART Transmission of UART (UART0 to UART2) (2/2)

(e) Serial output register m (SOm)... Sets only the bits of the target channel.

	15	14	13	12	11	10	9	8	7	6	5	4	3	2	1	0
SOm	0	0	0	0	CKOm3 ×	CKOm2 ×	CKOm1 ×	CKOm0 ×	0	0	0	0	SOm3 ×	SOm2 0/1 Note	SOm1 ×	SOm0 0/1 Note

0: Serial data output value is “0”
1: Serial data output value is “1”

(f) Serial output enable register m (SOEm)... Sets only the bits of the target channel to 1.

	15	14	13	12	11	10	9	8	7	6	5	4	3	2	1	0
SOEm	0	0	0	0	0	0	0	0	0	0	0	0	SOEm3 ×	SOEm2 0/1	SOEm1 ×	SOEm0 0/1

(g) Serial channel start register m (SSm)... Sets only the bits of the target channel to 1.

	15	14	13	12	11	10	9	8	7	6	5	4	3	2	1	0
SSm	0	0	0	0	0	0	0	0	0	0	0	0	SSm3 ×	SSm2 0/1	SSm1 ×	SSm0 0/1

Note Before transmission is started, be sure to set to 1 when the SOLmn bit of the target channel is set to 0, and set to 0 when the SOLmn bit of the target channel is set to 1. The value varies depending on the communication data during communication operation.

Remark 1. m: Unit number (m = 0, 1), n: Channel number (n = 0, 2), q: UART number (q = 0 to 2)
mn = 00, 02, 10

Remark 2. ■: Setting disabled (set to the initial value)
×: Bit that cannot be used in this mode (set to the initial value when not used in any mode)
0/1: Set to 0 or 1 depending on the usage of the user

(2) Operation procedure

Figure 19 - 109 Initial Setting Procedure for UART Transmission

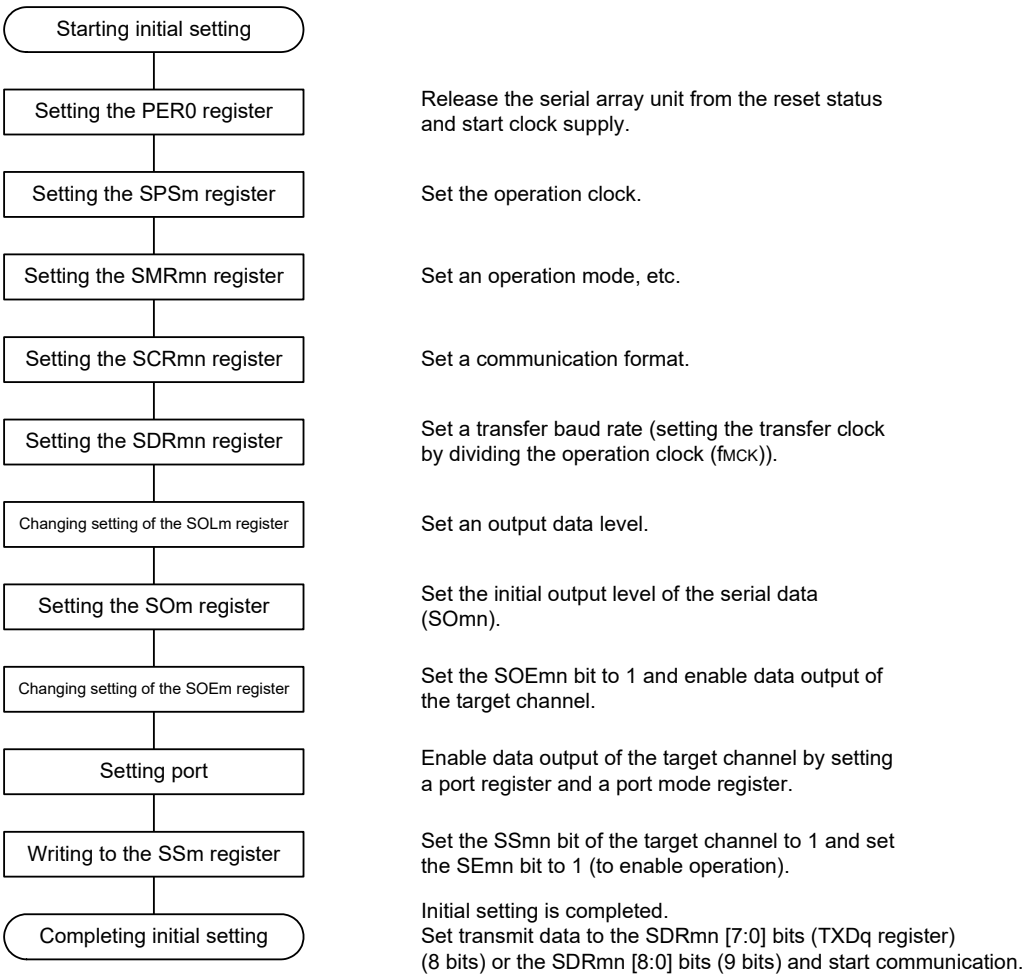

Figure 19 - 110 Procedure for Stopping UART Transmission

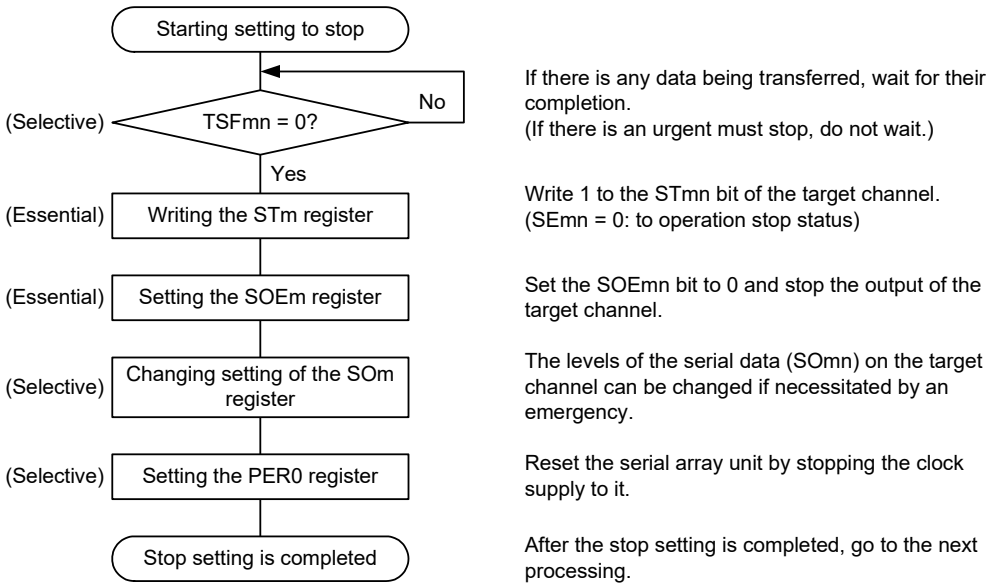

Figure 19 - 111 Procedure for Resuming UART Transmission

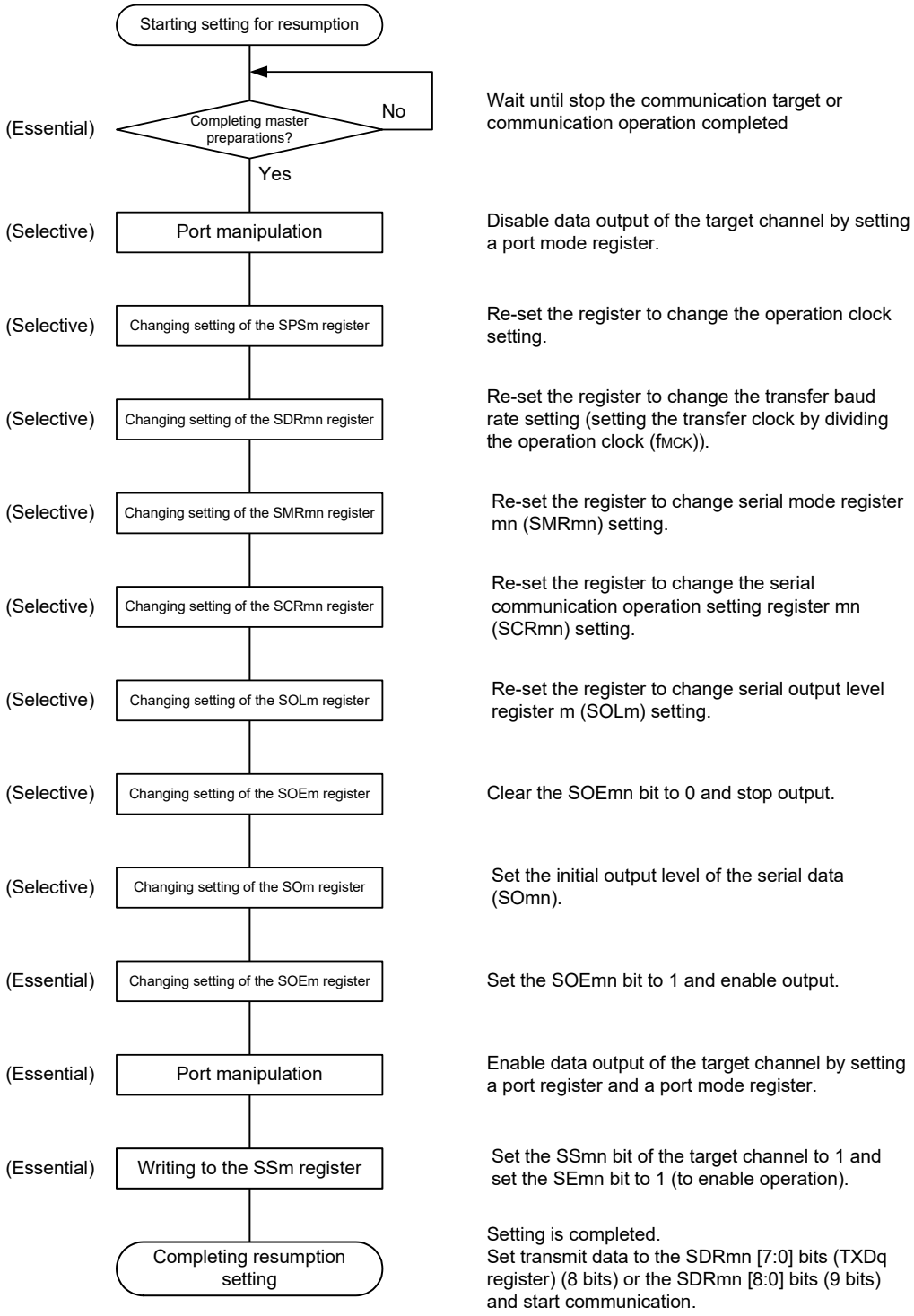

Remark If PER0 is rewritten while stopping the master transmission and the clock supply is stopped, wait until the transmission target stops or transmission finishes, and then perform initialization instead of restarting the transmission.

(3) Processing flow (in single-transmission mode)

Figure 19 - 112 Timing Chart of UART Transmission (in Single-Transmission Mode)

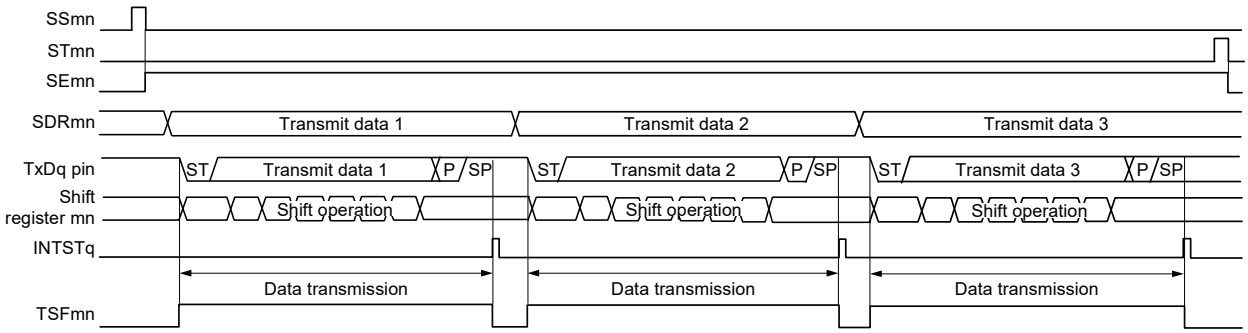

Remark m: Unit number (m = 0, 1), n: Channel number (n = 0, 2), q: UART number (q = 0 to 2)
mn = 00, 02, 10

Figure 19 - 113 Flowchart of UART Transmission (in Single-Transmission Mode)

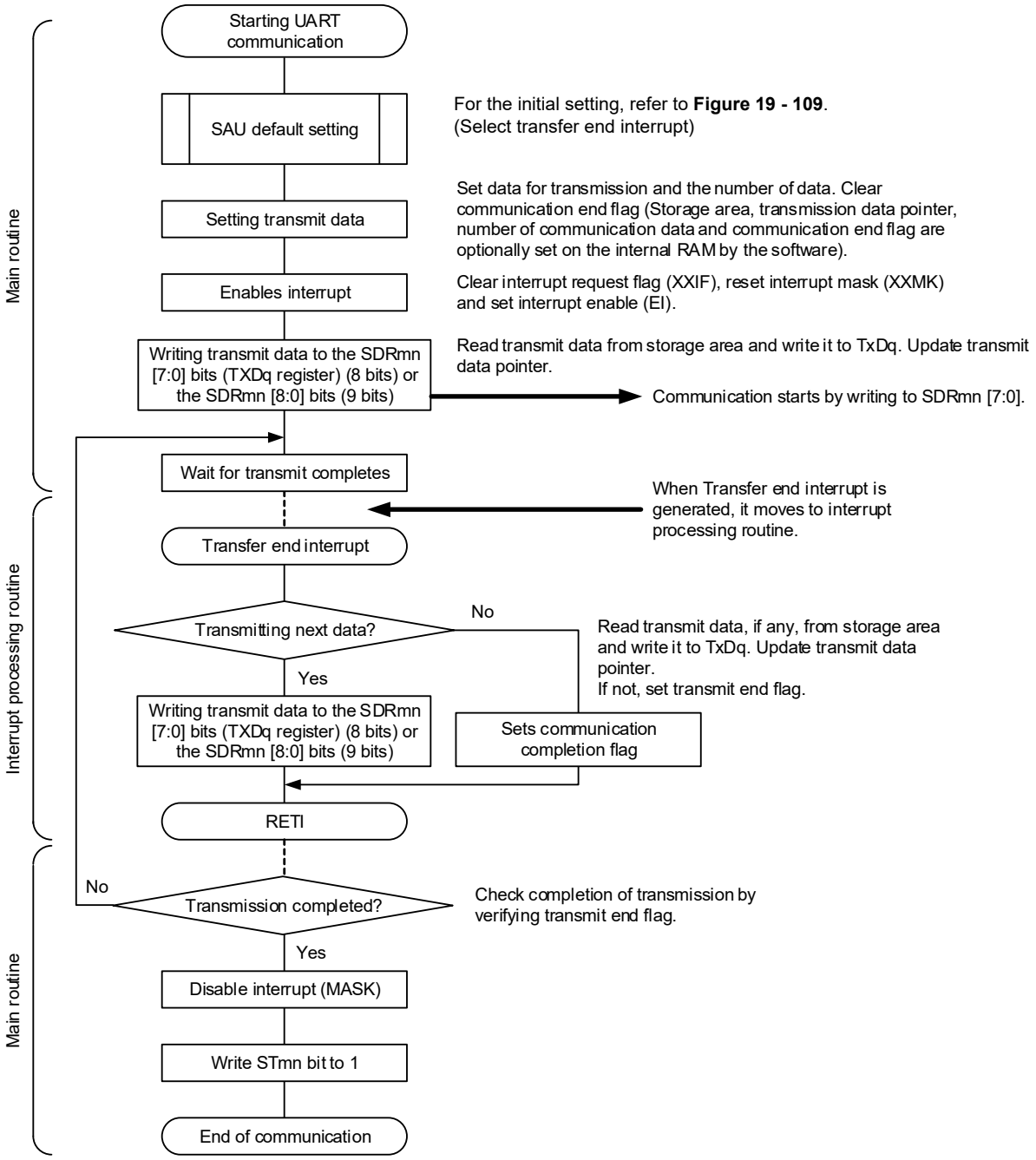

(4) Processing flow (in continuous transmission mode)

Figure 19 - 114 Timing Chart of UART Transmission (in Continuous Transmission Mode)

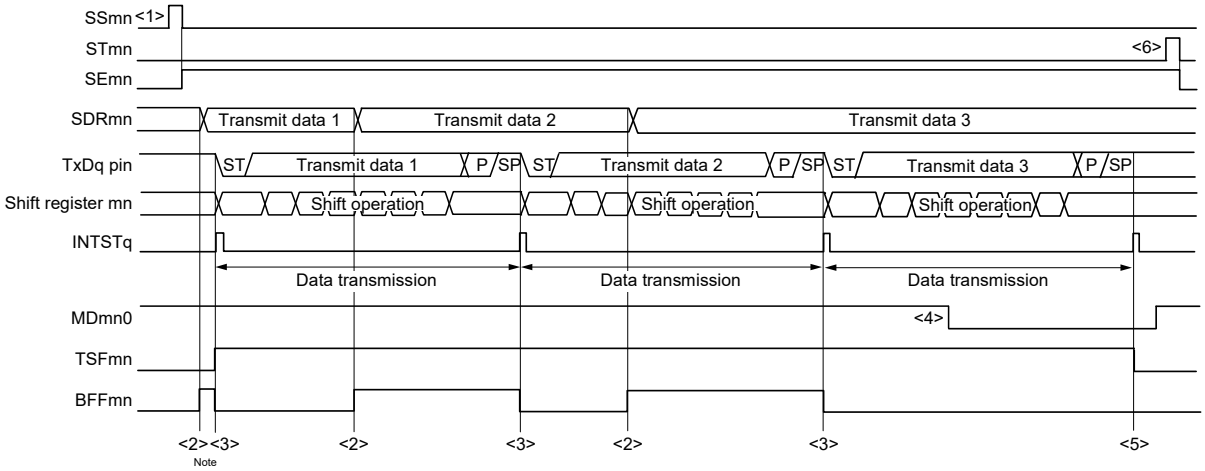

Note If transmit data is written to the SDRmn register while the BFFmn bit of serial status register mn (SSRmn) is 1 (valid data is stored in serial data register mn (SDRmn)), the transmit data is overwritten.

Caution **The MDmn0 bit of serial mode register mn (SSRmn) can be rewritten even during operation. However, rewrite it before transfer of the last bit is started, so that it will be rewritten before the transfer end interrupt of the last transmit data.**

Remark 1. m: Unit number (m = 0, 1), n: Channel number (n = 0, 2), q: UART number (q = 0 to 2)
mn = 00, 02, 10

Figure 19 - 115 Flowchart of UART Transmission (in Continuous Transmission Mode)

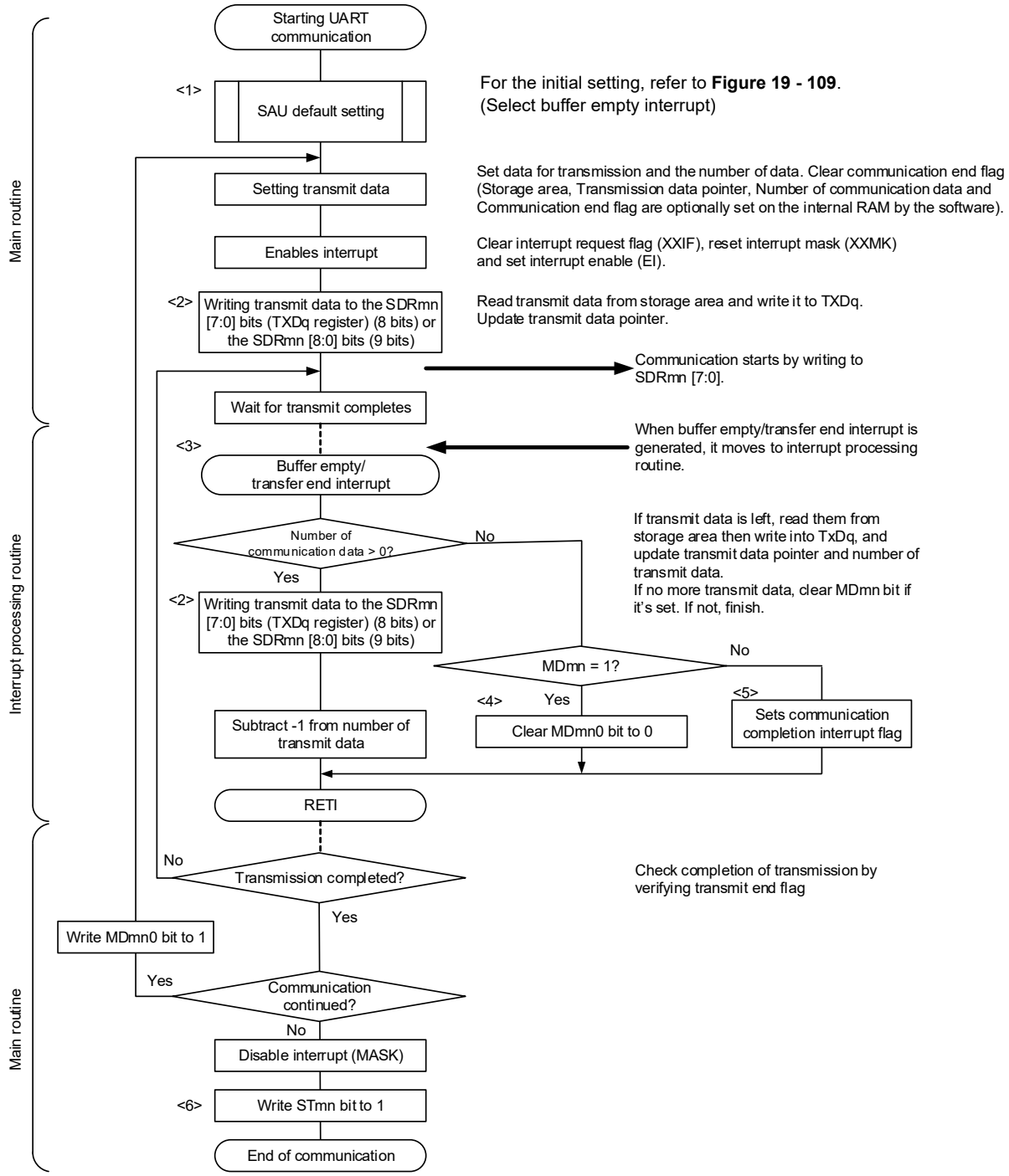

Remark <1> to <6> in the figure correspond to <1> to <6> in Figure 19 - 114 Timing Chart of UART Transmission (in Continuous Transmission Mode).

19.7.2 UART reception

UART reception is an operation wherein the RL78 microcontroller asynchronously receives data from another device (start-stop synchronization).

For UART reception, the odd-number channel of the two channels used for UART is used. The SMR register of both the odd- and even-numbered channels must be set.

UART	UART0	UART1	UART2
Target channel	Channel 1 of SAU0	Channel 3 of SAU0	Channel 1 of SAU1
Pins used	RxD0	RxD1	RxD2
Interrupt	INTST0	INTST1	INTST2
	Transfer end interrupt only (Setting the buffer empty interrupt is prohibited.)		
Error interrupt	INTSRE0	INTSRE1	INTSRE2
Error detection flag	• Framing error detection flag (FEFmn) • Parity error detection flag (PEFmn) • Overrun error detection flag (OVFmn)		
Transfer data length	7, 8 or 9 bits[Note 1]		
Transfer rate[Note 2]	Max. $f_{MCK}/6$ [bps] (SDRmn [15:9] = 2 or more), Min. $f_{CLK}/(2 \times 2^{15} \times 128)$ [bps]		
Data phase	Non-reverse output (default: high level) Reverse output (default: low level)		
Parity bit	The following selectable • No parity bit (no parity check) • Appending 0 parity (no parity check) • Appending even parity • Appending odd parity		
Stop bit	Appending 1 bit		
Data direction	MSB or LSB first		

Note 1. UART0 can only be specified for the 9-bit data length.

Note 2. Use this operation within a range that satisfies the conditions above and the peripheral functions characteristics in the electrical specifications (see **CHAPTER 37** or **CHAPTER 38 ELECTRICAL SPECIFICATIONS**).

Remark 1. f_{MCK}: Operation clock frequency of target channel
f_{CLK}: System clock frequency

Remark 2. m: Unit number (m = 0, 1), n: Channel number (n = 1, 3), mn = 01, 03, 11

(1) Register setting

Figure 19 - 116 Example of Contents of Registers for UART Reception of UART (UART0 to UART2) (1/2)

(a) Serial mode register mn (SMRmn)

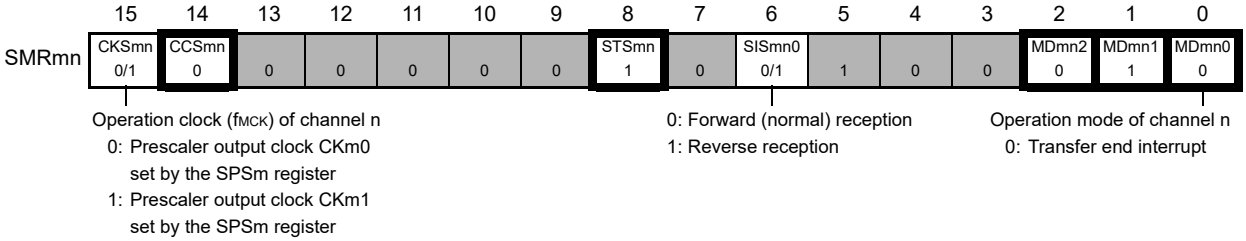

(b) Serial mode register mr (SMRmr)

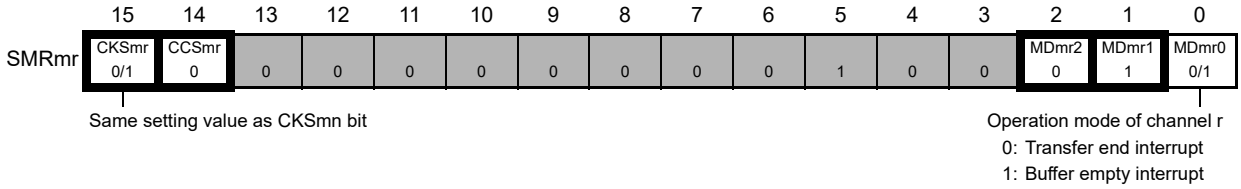

(c) Serial communication operation setting register mn (SCRmn)

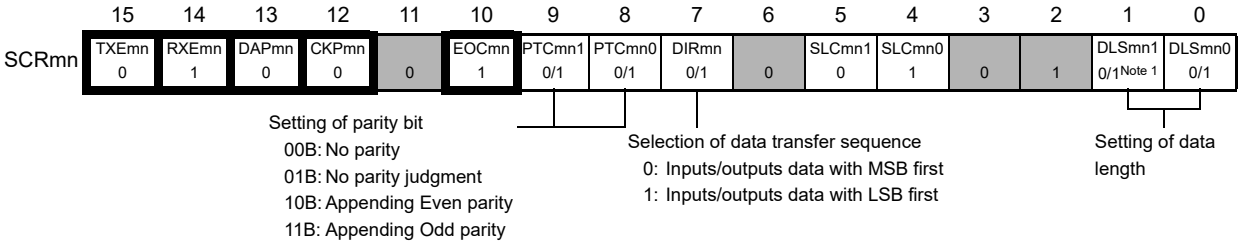

(d) Serial data register mn (SDRmn) (lower 8 bits: RXDq)

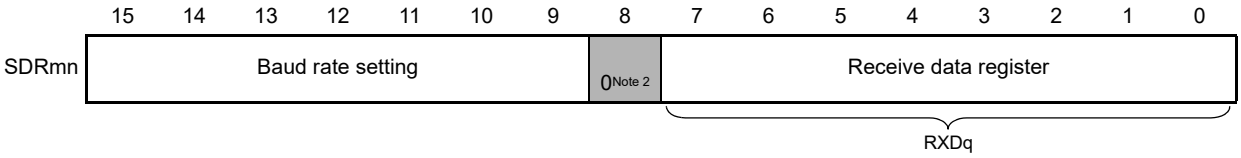

Note 1. Only provided for the SCR01 register. This bit is fixed to 1 for the other registers.

Note 2. When performing 9-bit communication, bits 0 to 8 of the SDRm1 register are used to specify the transmission data.
UART0 can only be specified for the 9-bit data length.

Caution **For the UART reception, be sure to set the SMRmr register of channel r that is to be paired with channel n.**

Remark 1. m: Unit number (m = 0, 1), n: Channel number (n = 1, 3), mn = 01, 03, 11
r: Channel number (r = n – 1), q: UART number (q = 0 to 2)

Remark 2. ■: Setting is fixed in the UART reception mode,
□: Setting disabled (set to the initial value)
×: Bit that cannot be used in this mode (set to the initial value when not used in any mode)
0/1: Set to 0 or 1 depending on the usage of the user

Figure 19 - 117 Example of Contents of Registers for UART Reception of UART (UART0 to UART2) (2/2)

(e) Serial output register m (SOm)... The register that not used in this mode.

	15	14	13	12	11	10	9	8	7	6	5	4	3	2	1	0
SOm	0	0	0	0	CKOm3 ×	CKOm2 ×	CKOm1 ×	CKOm0 ×	0	0	0	0	SOm3 ×	SOm2 ×	SOm1 ×	SOm0 ×

(f) Serial output enable register m (SOEm)... The register that not used in this mode.

	15	14	13	12	11	10	9	8	7	6	5	4	3	2	1	0
SOEm	0	0	0	0	0	0	0	0	0	0	0	0	SOEm3 ×	SOEm2 ×	SOEm1 ×	SOEm0 ×

(g) Serial channel start register m (SSm)... Sets only the bits of the target channel is 1.

	15	14	13	12	11	10	9	8	7	6	5	4	3	2	1	0
SSm	0	0	0	0	0	0	0	0	0	0	0	0	SSm3 0/1	SSm2 ×	SSm1 0/1	SSm0 ×

Remark 1. m: Unit number (m = 0, 1)

Remark 2. ■: Setting disabled (set to the initial value)
×: Bit that cannot be used in this mode (set to the initial value when not used in any mode)
0/1: Set to 0 or 1 depending on the usage of the user

(2) Operation procedure

Figure 19 - 118 Initial Setting Procedure for UART Reception

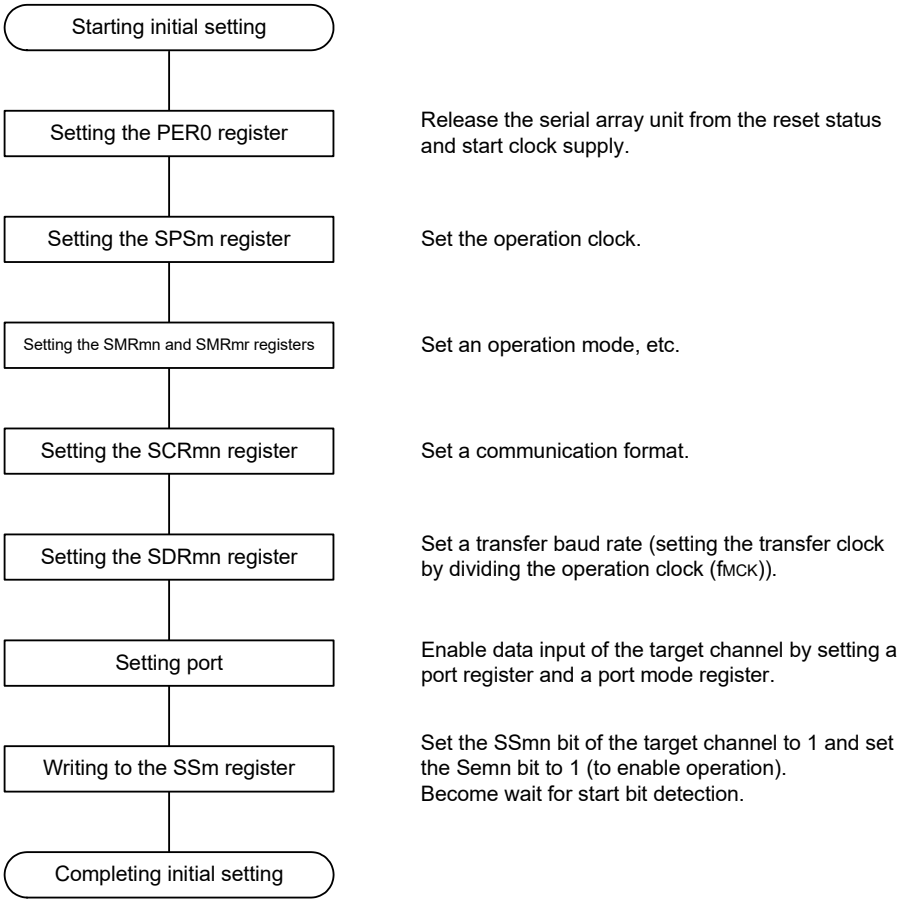

Caution **Set the RXEmn bit of SCRmn register to 1, and then be sure to set SSmn to 1 after 4 or more fMCK clocks have elapsed.**

Figure 19 - 119 Procedure for Stopping UART Reception

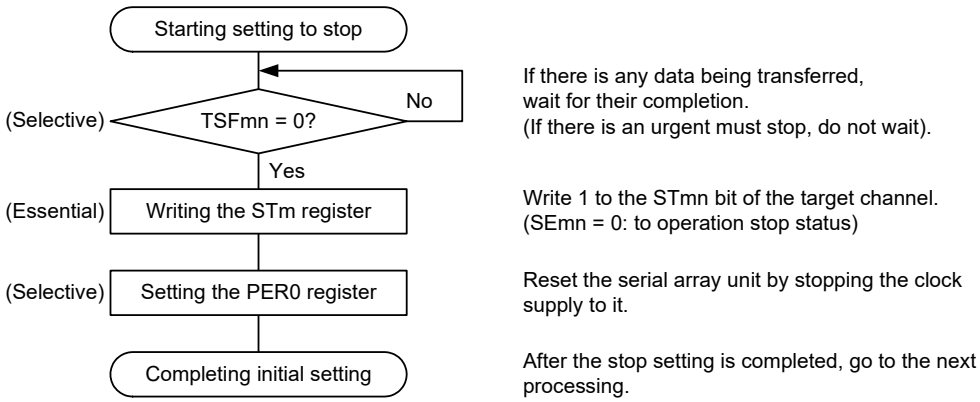

Figure 19 - 120 Procedure for Resuming UART Reception

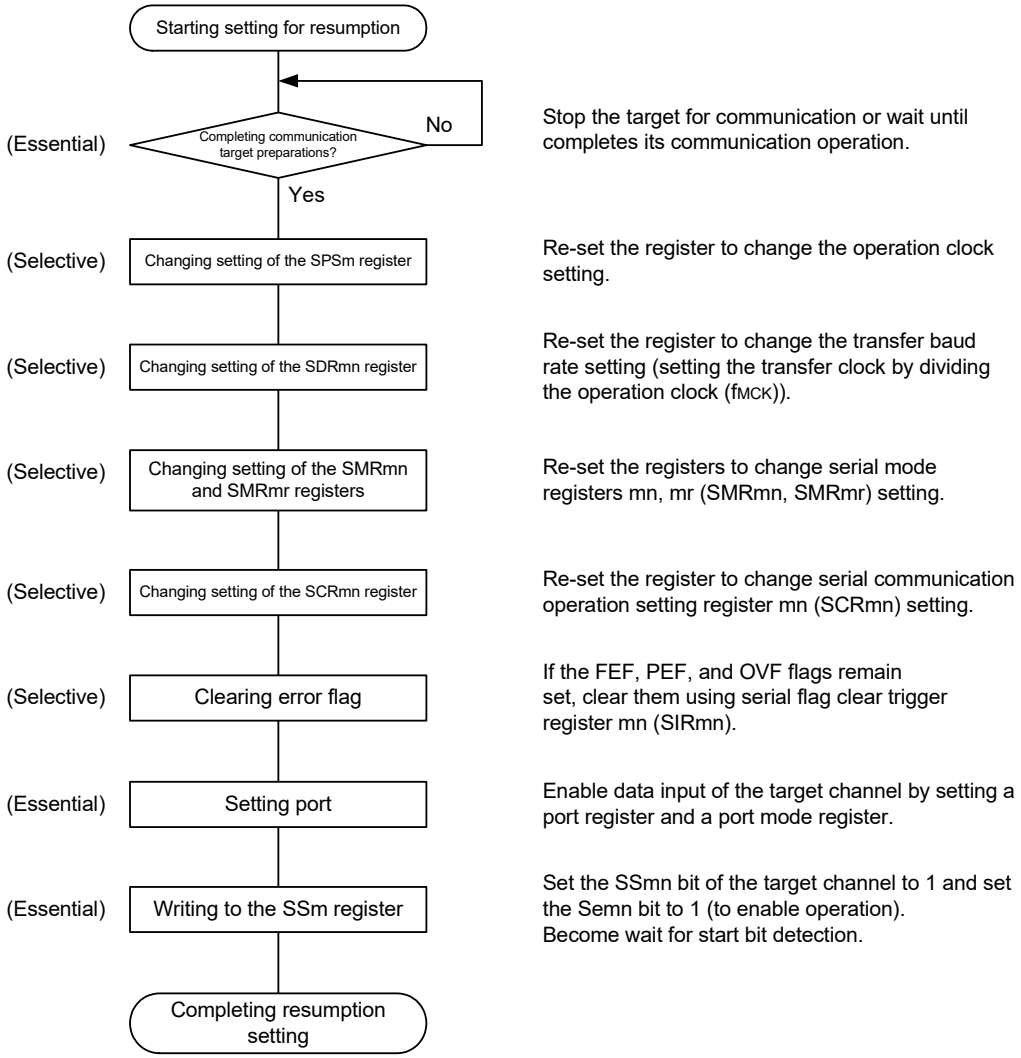

Caution **After is set RXEmn bit to 1 of SCRmn register, set the SSmn = 1 from an interval of at least four clocks of fMCK.**

Remark If PER0 is rewritten while stopping the communication target and the clock supply is stopped, wait until the communication target stops or communication finishes, and then perform initialization instead of restarting the communication.

(3) Processing flow

Figure 19 - 121 Timing Chart of UART Reception

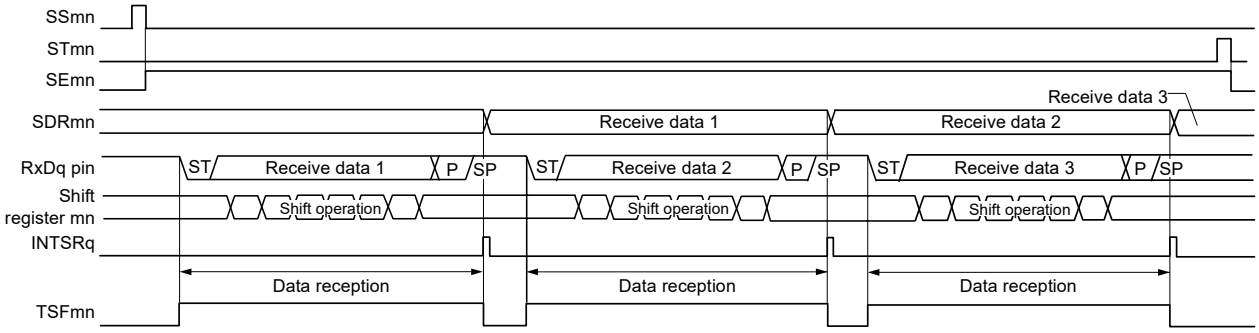

Remark m: Unit number (m = 0, 1), n: Channel number (n = 1, 3), mn = 01, 03, 11
r: Channel number (r = n – 1), q: UART number (q = 0 to 2)

Figure 19 - 122 Flowchart of UART Reception

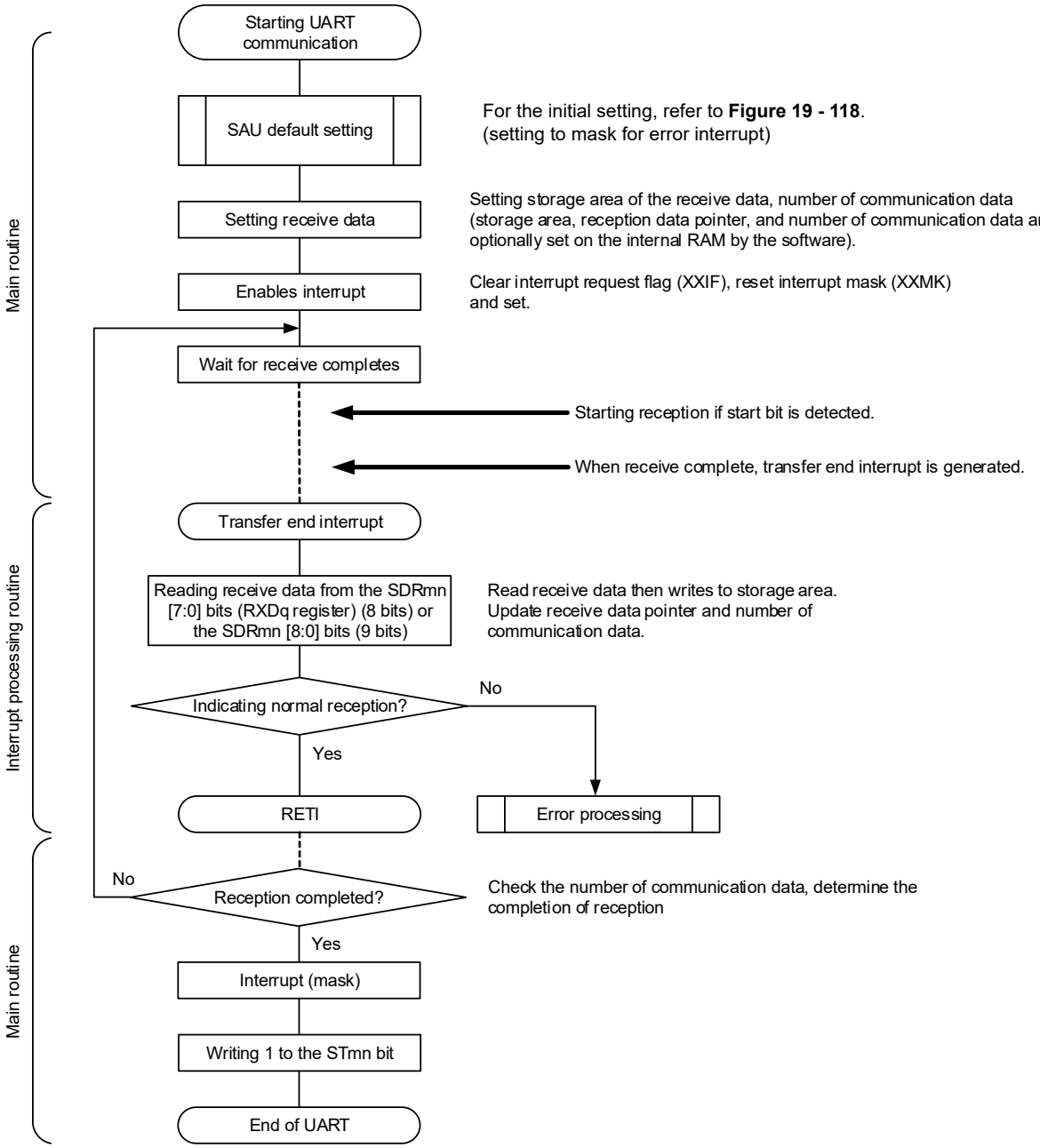

19.7.3 SNOOZE mode function

The SNOOZE mode makes the UART perform reception operations upon RxDq pin input detection while in the STOP mode. Normally the UART stops communication in the STOP mode. However, using the SNOOZE mode enables the UART to perform reception operations without CPU operation. UART0 can only be specified when FRQSEL4 in the option byte (000C2H) = 0 in the SNOOZE mode.

When using UARTq in the SNOOZE mode, make the following settings before entering the STOP mode (see **Figures 19 - 125** and **19 - 127 Flowchart of SNOOZE Mode Operation**).

- In the SNOOZE mode, the baud rate setting for UART reception needs to be changed to a value different from that in normal operation. Set the SPSm register and bits 15 to 9 of the SDRmn register with reference to Table 19 - 7.
- Set the EOCmn and SSECmn bits. This is for enabling or stopping generation of an error interrupt (INTSRE0) when a communication error occurs.
- When using the SNOOZE mode function, set the SWCm bit of serial standby control register m (SSCm) to 1 just before switching to the STOP mode. After the initial setting has completed, set the SSm1 bit of serial channel start register m (SSm) to 1.
- Upon detecting the edge of RxDq (start bit input) after a transition was made to the STOP mode, UART reception is started.

Caution 1. The SNOOZE mode can only be specified when the high-speed on-chip oscillator clock (f_{IH}) is selected for f_{CLK}.

Caution 2. The transfer rate in the SNOOZE mode is only 4800 bps.

Caution 3. When SWCm = 1, UARTq can be used only when the reception operation is started in the STOP mode. When used simultaneously with another SNOOZE mode function or interrupt, if the reception operation is started in a state other than the STOP mode, such as those given below, data may not be received correctly and a framing error or parity error may be generated.

- **When after the SWCm bit has been set to 1, the reception operation is started before the STOP mode is entered**
- **When the reception operation is started while another function is in the SNOOZE mode**
- **When after returning from the STOP mode to normal operation due to an interrupt or other cause, the reception operation is started before the SWCm bit is returned to 0**

Caution 4. If a parity error, framing error, or overrun error occurs while the SSECm bit is set to 1, the PEFmn, FEFmn, or OVFmn flag is not set and an error interrupt (INTSREq) is not generated. Therefore, when the setting of SSECm = 1 is made, clear the PEFmn, FEFmn, or OVFmn flag before setting the SWC0 bit to 1 and read the value in bits 7 to 0 (RxDq register) of the SDRm1 register.

Caution 5. The CPU shifts from the STOP mode to the SNOOZE mode on detecting the valid edge of the RxDq signal. Note, however, that transfer through the UART channel may not start and the CPU may remain in the SNOOZE mode if an input pulse on the RxDq pin is too short to be detected as a start bit.

In such cases, data may not be received correctly, and this may lead to a framing error or parity error in the next UART transfer.

Table 19 - 7 Baud Rate Setting for UART Reception in SNOOZE Mode

High-speed On-chip Oscillator (f_{IH})	Baud Rate for UART Reception in SNOOZE Mode			
	Baud Rate of 4800 bps			
	Operation Clock (f_{MCK})	SDRmn [15:9]	Maximum Permissible Value	Minimum Permissible Value
32 MHz ± 1.0%Note	$f_{CLK}/2^5$	105	2.27%	-1.53%
24 MHz ± 1.0%Note	$f_{CLK}/2^5$	79	1.60%	-2.18%
16 MHz ± 1.0%Note	$f_{CLK}/2^4$	105	2.27%	-1.53%
12 MHz ± 1.0%Note	$f_{CLK}/2^4$	79	1.60%	-2.19%
8 MHz ± 1.0%Note	$f_{CLK}/2^3$	105	2.27%	-1.53%
6 MHz ± 1.0%Note	$f_{CLK}/2^3$	79	1.60%	-2.19%
4 MHz ± 1.0%Note	$f_{CLK}/2^2$	105	2.27%	-1.53%
3 MHz ± 1.0%Note	$f_{CLK}/2^2$	79	1.60%	-2.19%
2 MHz ± 1.0%Note	$f_{CLK}/2$	105	2.27%	-1.54%
1 MHz ± 1.0%Note	f_{CLK}	105	2.27%	-1.57%

Note When the accuracy of the clock frequency of the high-speed on-chip oscillator is ±1.5% or ±2.0%, the permissible range becomes smaller as shown below.

- In the case of f_{IH} ± 1.5%, perform (Maximum permissible value - 0.5%) and (Minimum permissible value + 0.5%) to the values in the above table.
- In the case of f_{IH} ± 2.0%, perform (Maximum permissible value - 1.0%) and (Minimum permissible value + 1.0%) to the values in the above table.

Remark The maximum permissible value and minimum permissible value are permissible values for the baud rate in UART reception. The baud rate on the transmitting side should be set to fall inside this range.

(1) SNOOZE mode operation (EOCm1 = 0, SSECm = 0/1)

Because of the setting of EOCm1 = 0, even though a communication error occurs, an error interrupt (INTSREq) is not generated, regardless of the setting of the SSECm bit. A transfer end interrupt (INTSRq) will be generated.

Figure 19 - 123 Timing Chart of SNOOZE Mode Operation (EOCm1 = 0, SSECm = 0/1)

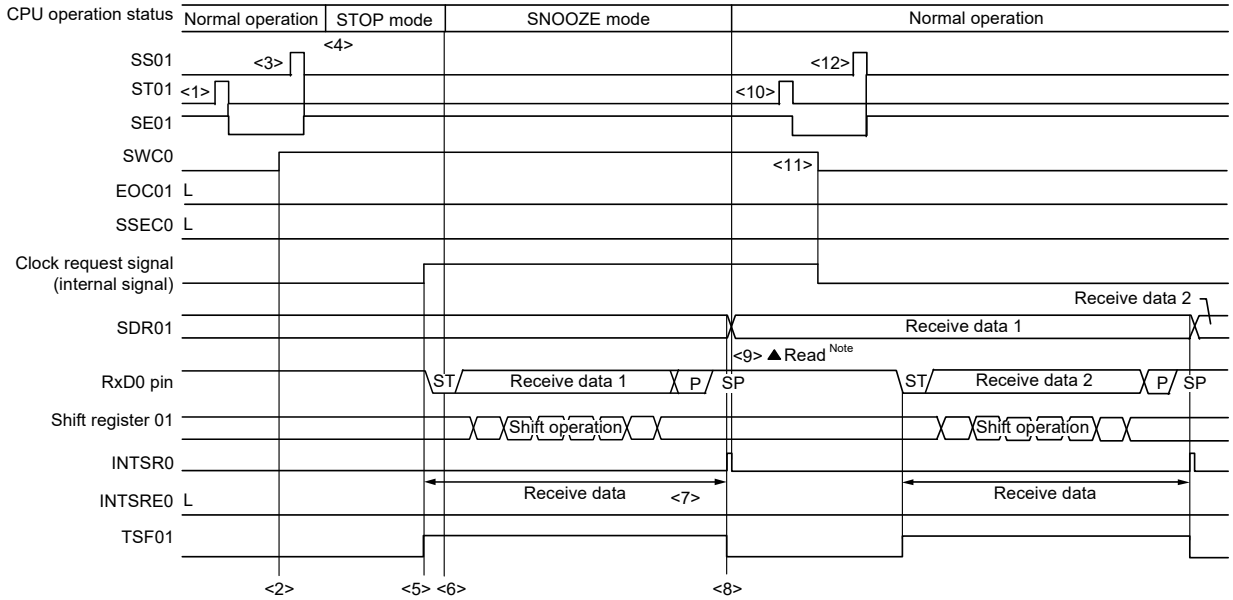

Note Read the received data when SWCm is 1.

Caution **Before switching to the SNOOZE mode or after reception operation in the SNOOZE mode finishes, set the STm1 bit to 1 (clear the SEm1 bit, and stop the operation).**
And after completion the receive operation, also clearing SWCm bit to 0 (SNOOZE mode release).

Remark 1. <1> to <12> in the figure correspond to <1> to <12> in Figure 19 - 125 Flowchart of SNOOZE Mode Operation (EOCm1 = 0, SSECm = 0/1 or EOCm1 = 1, SSECm = 0).

Remark 2. m = 0; q = 0

(2) SNOOZE mode operation (EOCm1 = 1, SSECm = 0: Error interrupt (INTSREq) generation is enabled)
Because EOCm1 = 1 and SSECm = 0, an error interrupt (INTSREq) is generated when a communication error occurs.

Figure 19 - 124 Timing Chart of SNOOZE Mode Operation (EOCm1 = 1, SSECm = 0)

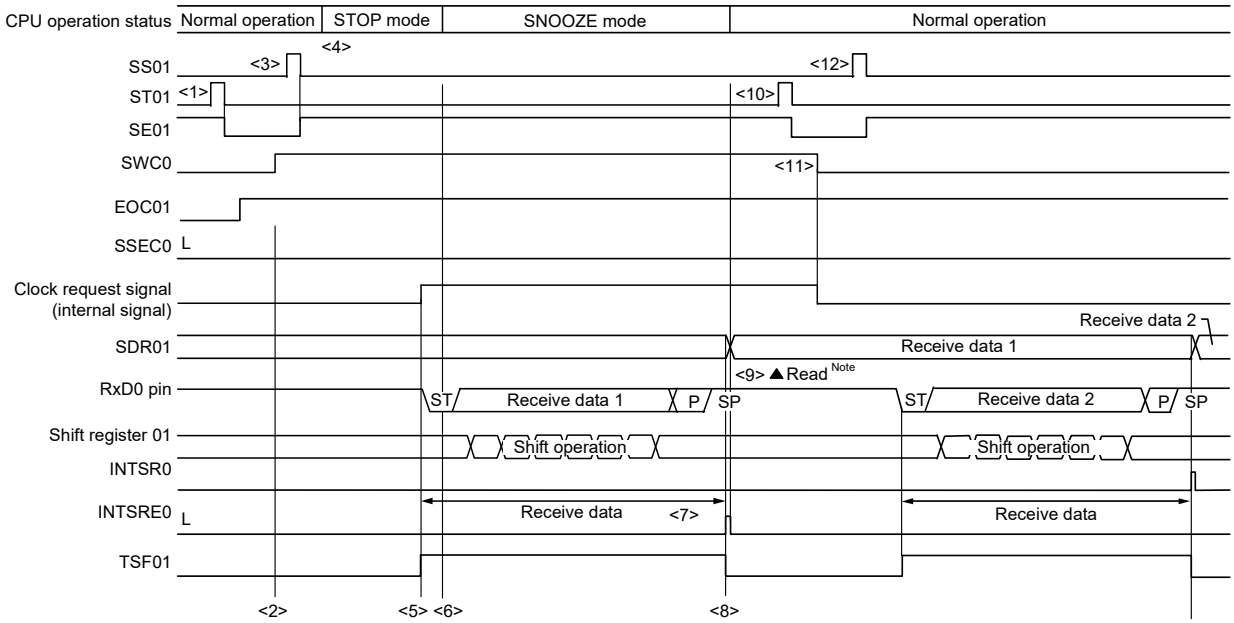

Note Read the received data when SWCm = 1.

Caution **Before switching to the SNOOZE mode or after reception operation in the SNOOZE mode finishes, set the STm1 bit to 1 (clear the SEm1 bit, and stop the operation).**
And after completion the receive operation, also clearing SWCm bit to 0 (SNOOZE mode release).

Remark 1. <1> to <12> in the figure correspond to <1> to <12> in Figure 19 - 125 Flowchart of SNOOZE Mode Operation (EOCm1 = 0, SSECm = 0/1 or EOCm1 = 1, SSECm = 0).

Remark 2. m = 0; q = 0

Figure 19 - 125 Flowchart of SNOOZE Mode Operation (EOCm1 = 0, SSECm = 0/1 or EOCm1 = 1, SSECm = 0)

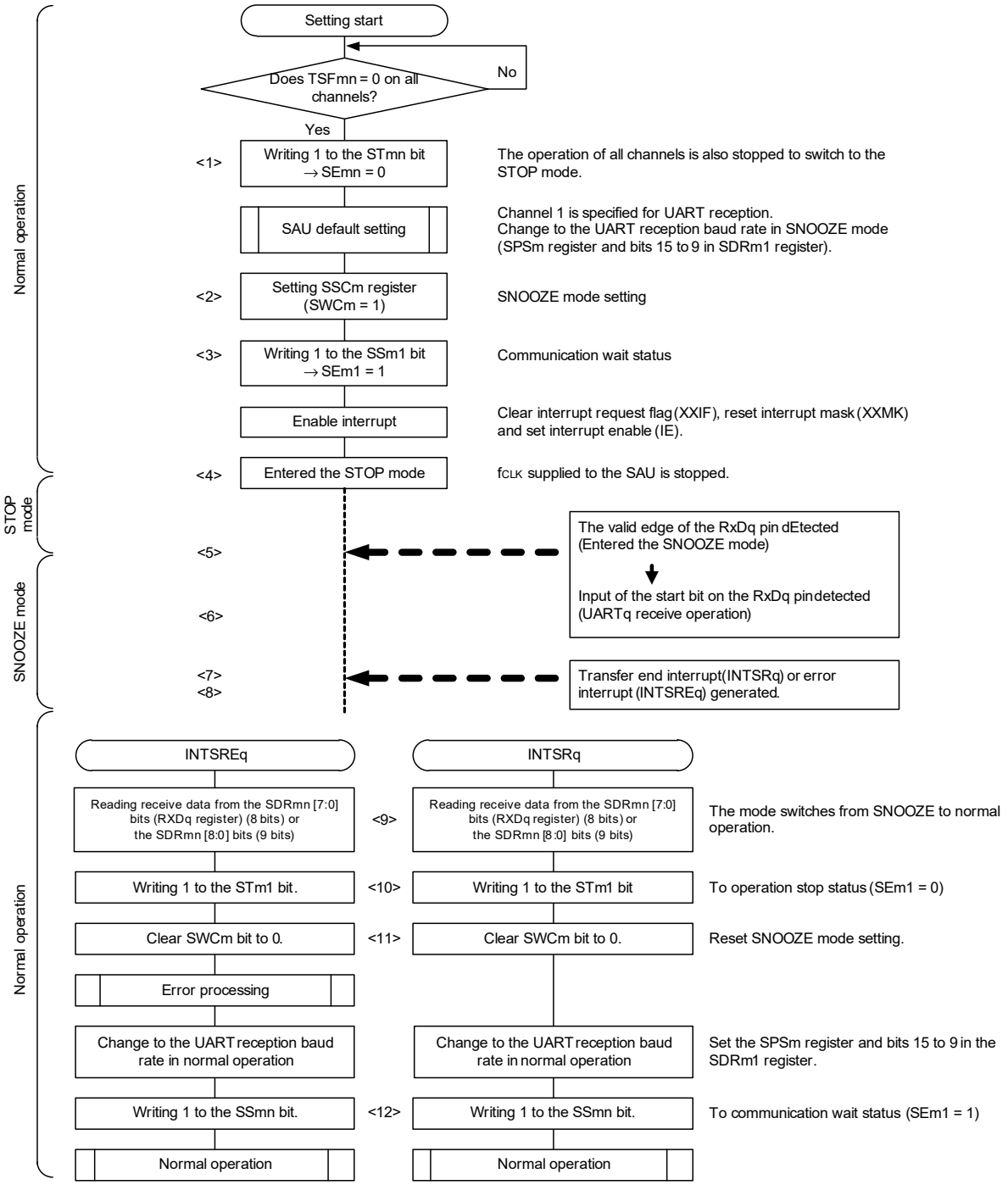

Remark 1. <1> to <12> in the figure correspond to <1> to <12> in Figure 19 - 123 Timing Chart of SNOOZE Mode Operation (EOCm1 = 0, SSECm = 0/1) and Figure 19 - 124 Timing Chart of SNOOZE Mode Operation (EOCm1 = 1, SSECm = 0).

Remark 2. m = 0; q = 0

(3) SNOOZE mode operation (EOCm1 = 1, SSECm = 1: Error interrupt (INTSREq) generation is stopped)
Because EOCm1 = 1 and SSECm = 1, an error interrupt (INTSREq) is not generated when a communication error occurs.

Figure 19 - 126 Timing Chart of SNOOZE Mode Operation (EOCm1 = 1, SSECm = 1)

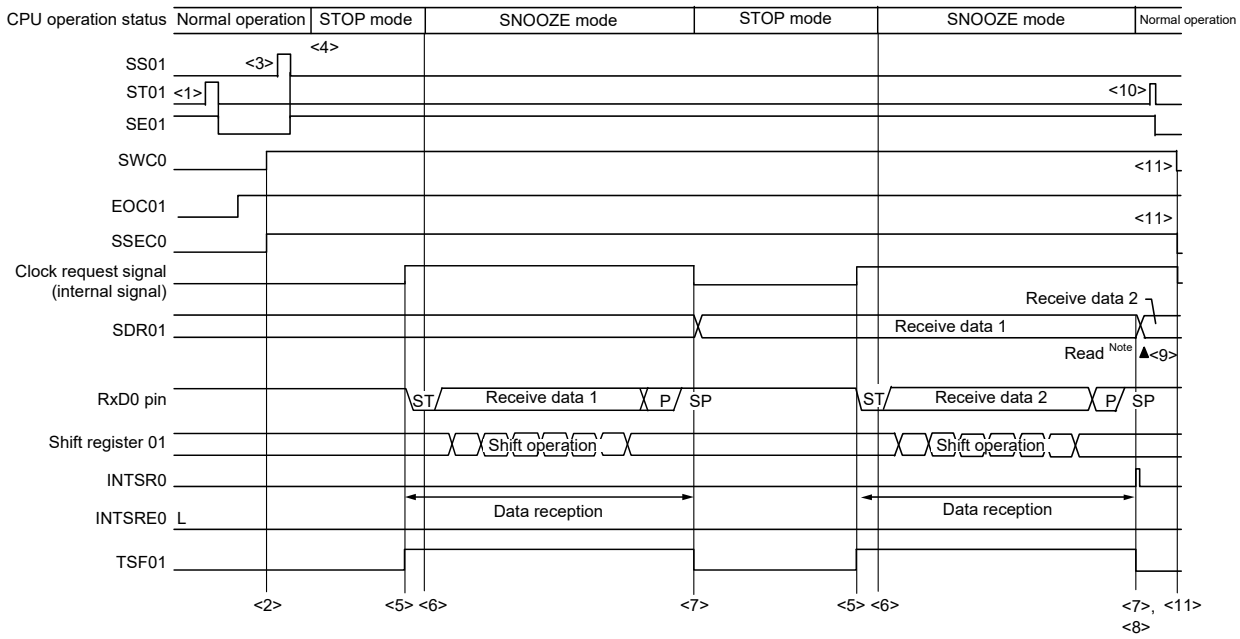

Note Only read received data while SWCm = 1.

Caution 1. Before switching to the SNOOZE mode or after reception operation in the SNOOZE mode finishes, set the STm1 bit to 1 (clear the SEm1 bit, and stop the operation).
And after completion the receive operation, also clearing SWCm bit to 0 (SNOOZE mode release).

Caution 2. If a parity error, framing error, or overrun error occurs while the SSECm bit is set to 1, the PEFm1, FEFm1, or OVFm1 flag is not set and an error interrupt (INTSREq) is not generated. Therefore, when the setting of SSECm = 1 is made, clear the PEFm1, FEFm1, or OVFm1 flag before setting the SWCm bit to 1 and read the value in SDRm1[7:0] (RxDq register) (8 bits) or SDRm1[8:0] (9 bits).

Remark 1. <1> to <11> in the figure correspond to <1> to <11> in Figure 19 - 127 Flowchart of SNOOZE Mode Operation (EOCm1 = 1, SSECm = 1).

Remark 2. m = 0; q = 0

Figure 19 - 127 Flowchart of SNOOZE Mode Operation (EOCm1 = 1, SSECm = 1)

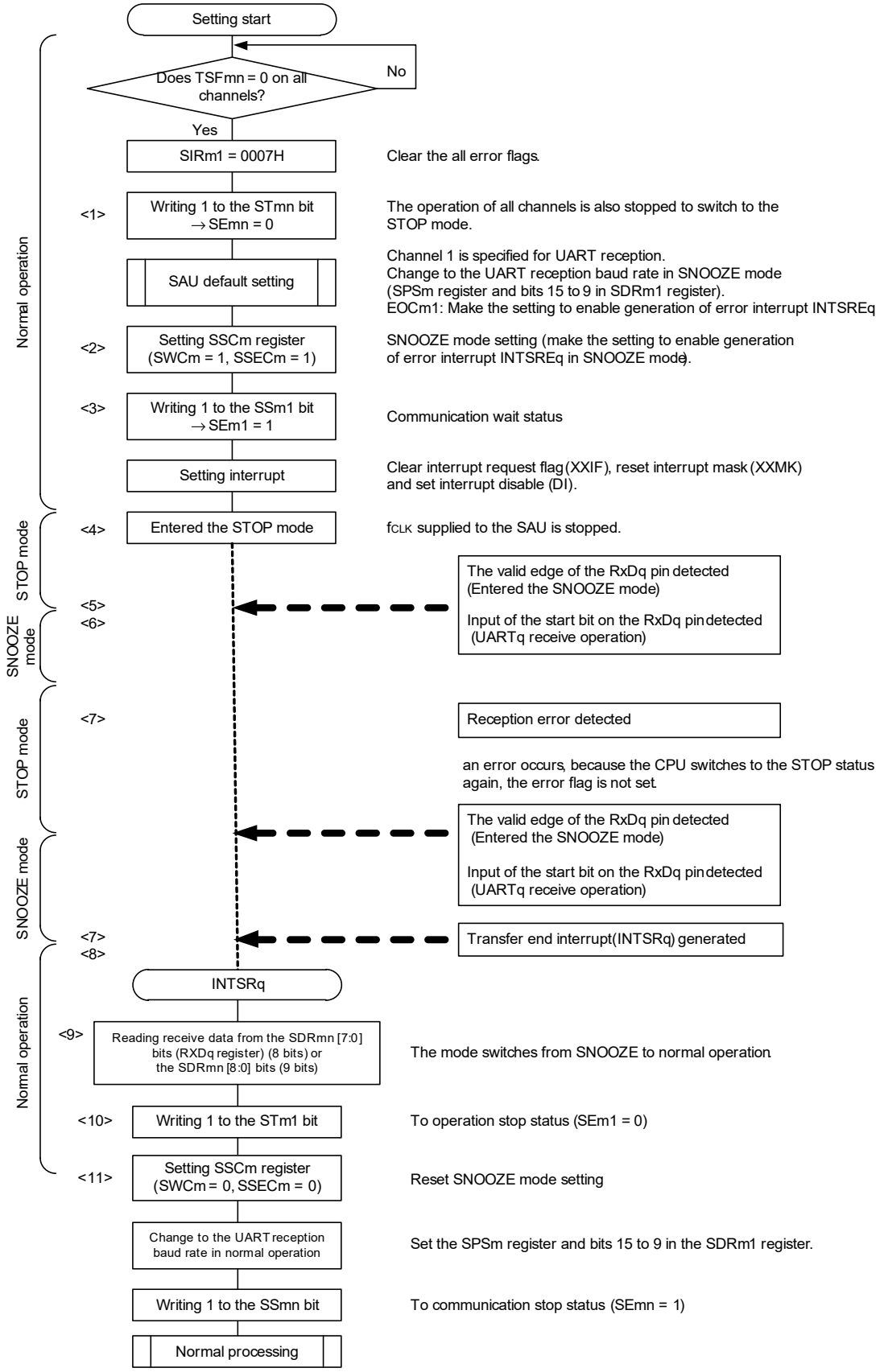

(**Caution** and **Remarks** are listed on the next page.)

Caution **If a parity error, framing error, or overrun error occurs while the SSECm bit is set to 1, the PEFm1, FEFm1, or OVFm1 flag is not set and an error interrupt (INTSREq) is not generated. Therefore, when the setting of SSECm = 1 is made, clear the PEFm1, FEFm1, or OVFm1 flag before setting the SWCm bit to 1 and read the value in SDRm1[7:0] (RxDq register) (8 bits) or SDRm1[8:0] (9 bits).**

Remark 1. <1> to <11> in the figure correspond to <1> to <11> in Figure 19 - 126 Timing Chart of SNOOZE Mode Operation (EOCm1 = 1, SSECm = 1).

Remark 2. m = 0; q = 0

19.7.4 Calculating baud rate

(1) Baud rate calculation expression

The baud rate for UART (UART0 to UART2) communication can be calculated by the following expressions.

(Baud rate) = {Operation clock (f_{MCK}) frequency of target channel} ÷ (SDRmn[15:9] + 1) ÷ 2 [bps]

Caution Setting serial data register mn (SDRmn) SDRmn[15:9] = (0000000B, 0000001B) is prohibited.

Remark 1. When UART is used, the value of SDRmn[15:9] is the value of bits 15 to 9 of the SDRmn register (0000010B to 1111111B) and therefore is 2 to 127.

Remark 2. m: Unit number (m = 0, 1), n: Channel number (n = 0 to 3), mn = 00 to 03, 10, 11

The operation clock (f_{MCK}) is determined by serial clock select register m (SPSm) and bit 15 (CKSmn) of serial mode register mn (SMRmn).

Table 19 - 8 Selection of Operation Clock For UART

SMRmn Register	SPSm Register								Operation Clock (f_{MCK})Note	
CKSmn	PRS m13	PRS m12	PRS m11	PRS m10	PRS m03	PRS m02	PRS m01	PRS m00		f_{CLK} = 32 MHz
0	×	×	×	×	0	0	0	0	f_{CLK}	32 MHz
	×	×	×	×	0	0	0	1	$f_{CLK}/2$	16 MHz
	×	×	×	×	0	0	1	0	$f_{CLK}/2^2$	8 MHz
	×	×	×	×	0	0	1	1	$f_{CLK}/2^3$	4 MHz
	×	×	×	×	0	1	0	0	$f_{CLK}/2^4$	2 MHz
	×	×	×	×	0	1	0	1	$f_{CLK}/2^5$	1 MHz
	×	×	×	×	0	1	1	0	$f_{CLK}/2^6$	500 kHz
	×	×	×	×	0	1	1	1	$f_{CLK}/2^7$	250 kHz
	×	×	×	×	1	0	0	0	$f_{CLK}/2^8$	125 kHz
	×	×	×	×	1	0	0	1	$f_{CLK}/2^9$	62.5 kHz
	×	×	×	×	1	0	1	0	$f_{CLK}/2^{10}$	31.25 kHz
	×	×	×	×	1	0	1	1	$f_{CLK}/2^{11}$	15.63 kHz
	×	×	×	×	1	1	0	0	$f_{CLK}/2^{12}$	7.81 kHz
	×	×	×	×	1	1	0	1	$f_{CLK}/2^{13}$	3.91 kHz
	×	×	×	×	1	1	1	0	$f_{CLK}/2^{14}$	1.95 kHz
	×	×	×	×	1	1	1	1	$f_{CLK}/2^{15}$	977 Hz
1	0	0	0	0	×	×	×	×	f_{CLK}	32 MHz
	0	0	0	1	×	×	×	×	$f_{CLK}/2$	16 MHz
	0	0	1	0	×	×	×	×	$f_{CLK}/2^2$	8 MHz
	0	0	1	1	×	×	×	×	$f_{CLK}/2^3$	4 MHz
	0	1	0	0	×	×	×	×	$f_{CLK}/2^4$	2 MHz
	0	1	0	1	×	×	×	×	$f_{CLK}/2^5$	1 MHz
	0	1	1	0	×	×	×	×	$f_{CLK}/2^6$	500 kHz
	0	1	1	1	×	×	×	×	$f_{CLK}/2^7$	250 kHz
	1	0	0	0	×	×	×	×	$f_{CLK}/2^8$	125 kHz
	1	0	0	1	×	×	×	×	$f_{CLK}/2^9$	62.5 kHz
	1	0	1	0	×	×	×	×	$f_{CLK}/2^{10}$	31.25 kHz
	1	0	1	1	×	×	×	×	$f_{CLK}/2^{11}$	15.63 kHz
	1	1	0	0	×	×	×	×	$f_{CLK}/2^{12}$	7.81 kHz
	1	1	0	1	×	×	×	×	$f_{CLK}/2^{13}$	3.91 kHz
	1	1	1	0	×	×	×	×	$f_{CLK}/2^{14}$	1.95 kHz
	1	1	1	1	×	×	×	×	$f_{CLK}/2^{15}$	977 Hz

Note When changing the clock selected for f_{CLK} (by changing the system clock control register (CKC) value), do so after having stopped (serial channel stop register m (STm) = 000FH) the operation of the serial array unit (SAU).

Remark 1. ×: Don't care

Remark 2. m: Unit number (m = 0, 1), n: Channel number (n = 0 to 3), mn = 00 to 03, 10, 11

(2) Baud rate error during transmission

The baud rate error of UART (UART0 to UART2) communication during transmission can be calculated by the following expression. Make sure that the baud rate at the transmission side is within the permissible baud rate range at the reception side.

(Baud rate error) = (Calculated baud rate value) ÷ (Target baud rate) ×100 –100 [%]

Here is an example of setting a UART baud rate at f_{CLK} = 32 MHz.

UART Baud Rate (Target Baud Rate)	f_{CLK} = 32 MHz			
	Operation Clock (f_{MCK})	SDRmn[15:9]	Calculated Baud Rate	Error from Target Baud Rate
300 bps	$f_{CLK}/2^9$	103	300.48 bps	+0.16%
600 bps	$f_{CLK}/2^8$	103	600.96 bps	+0.16%
1200 bps	$f_{CLK}/2^7$	103	1201.92 bps	+0.16%
2400 bps	$f_{CLK}/2^6$	103	2403.85 bps	+0.16%
4800 bps	$f_{CLK}/2^5$	103	4807.69 bps	+0.16%
9600 bps	$f_{CLK}/2^4$	103	9615.38 bps	+0.16%
19200 bps	$f_{CLK}/2^3$	103	19230.8 bps	+0.16%
31250 bps	$f_{CLK}/2^3$	63	31250.0 bps	±0.0%
38400 bps	$f_{CLK}/2^2$	103	38461.5 bps	+0.16%
76800 bps	$f_{CLK}/2$	103	76923.1 bps	+0.16%
153600 bps	f_{CLK}	103	153846 bps	+0.16%
312500 bps	f_{CLK}	50	312500 bps	±0.39%

Remark m: Unit number (m = 0, 1), n: Channel number (n = 0, 2), mn = 00, 02, 10

(3) Permissible baud rate range for reception

The permissible baud rate range for reception during UART (UART0 to UART2) communication can be calculated by the following expression. Make sure that the baud rate at the transmission side is within the permissible baud rate range at the reception side.

$$\text{(Maximum receivable baud rate)} = \frac{2 \times k \times Nfr}{2 \times k \times Nfr - k + 2} \times Brate$$

$$\text{(Minimum receivable baud rate)} = \frac{2 \times k \times (Nfr - 1)}{2 \times k \times Nfr - k - 2} \times Brate$$

Brate: Calculated baud rate value at the reception side (See **19.7.4 (1) Baud rate calculation expression**.)

k: SDRmn[15:9] + 1

Nfr: 1 data frame length [bits]

= (Start bit) + (Data length) + (Parity bit) + (Stop bit)

Remark m: Unit number (m = 0, 1), n: Channel number (n = 1, 3), mn = 01, 03, 11

Figure 19 - 128 Permissible Baud Rate Range for Reception (1 Data Frame Length = 11 Bits)

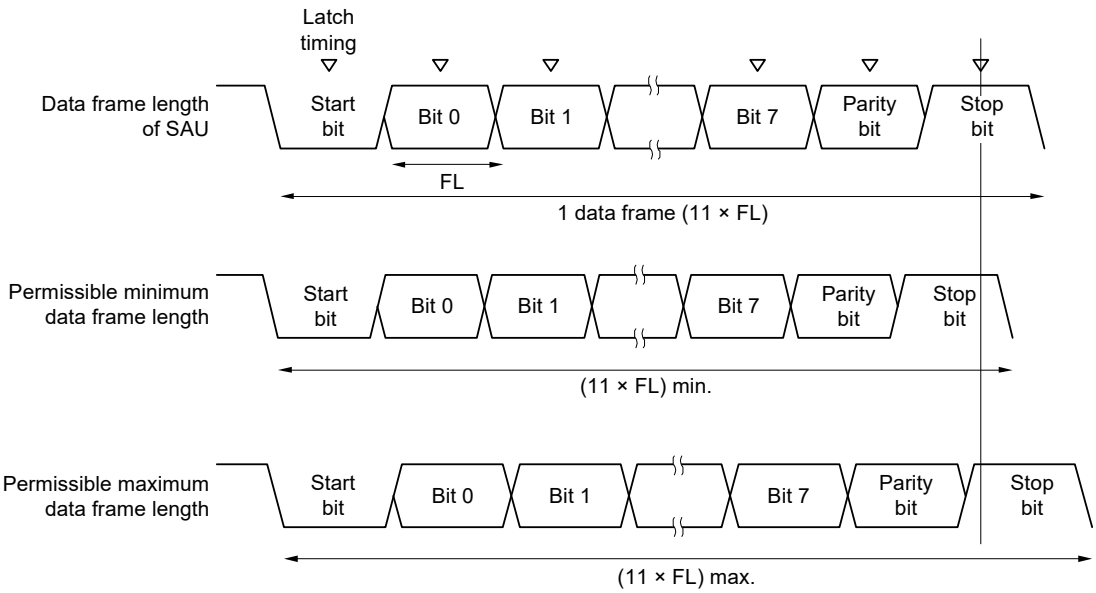

As shown in Figure 19 - 128, the timing of latching receive data is determined by the division ratio set by bits 15 to 9 of serial data register mn (SDRmn) after the start bit is detected. If the last data (stop bit) is received before this latch timing, the data can be correctly received.

19.7.5 Procedure for processing errors that occurred during UART (UART0 to UART2) communication

The procedure for processing errors that occurred during UART (UART0 to UART2) communication is described in Figures 19 - 129 and 19 - 130.

Figure 19 - 129 Processing Procedure in Case of Parity Error or Overrun Error

Software Manipulation	Hardware Status	Remark
Reads serial data register mn (SDRmn) →	The BFFmn bit of the SSRmn register is set to 0 and channel n is enabled to receive data.	This is to prevent an overrun error if the next reception is completed during error processing.
Reads serial status register mn (SSRmn).		Error type is identified and the read value is used to clear error flag.
Writes 1 to serial flag clear trigger register mn (SIRmn). →	Error flag is cleared.	Error can be cleared only during reading, by writing the value read from the SSRmn register to the SIRmn register without modification.

Figure 19 - 130 Processing Procedure in Case of Framing Error

Software Manipulation	Hardware Status	Remark
Reads serial data register mn (SDRmn). →	The BFFmn bit of the SSRmn register is set to 0 and channel n is enabled to receive data.	This is to prevent an overrun error if the next reception is completed during error processing.
Reads serial status register mn (SSRmn).		Error type is identified and the read value is used to clear error flag.
Writes serial flag clear trigger register mn (SIRmn). →	Error flag is cleared.	Error can be cleared only during reading, by writing the value read from the SSRmn register to the SIRmn register without modification.
Sets the STmn bit of serial channel stop register m (STm) to 1. →	The SEmn bit of serial channel enable status register m (SEm) is set to 0 and channel n stops operating.	
Synchronization with other party of communication		Synchronization with the other party of communication is re-established and communication is resumed because it is considered that a framing error has occurred because the start bit has been shifted.
Sets the SSmn bit of serial channel start register m (SSm) to 1. →	The SEmn bit of serial channel enable status register m (SEm) is set to 1 and channel n is enabled to operate.	

Remark m: Unit number (m = 0, 1), n: Channel number (n = 0 to 3), mn = 00 to 03, 10, 11

19.8 LIN Communication Operation

19.8.1 LIN transmission

Of UART transmission, UART0 support LIN communication.
For LIN transmission, channel 0 of unit 0 is used.

UART	UART0	UART1	UART2
Support of LIN communication	Supported	Not supported	Not supported
Target channel	Channel 0 of SAU0	—	—
Pins used	TxD0	—	—
Interrupt	INTST0	—	—
	Transfer end interrupt (in single-transfer mode) or buffer empty interrupt (in continuous transfer mode) can be selected.		
Error detection flag	None		
Transfer data length	8 bits		
Transfer rate[Note]	Max. $f_{MCK}/6$ [bps] (SDR00 [15:9] = 2 or more), Min. $f_{CLK}/(2 \times 2^{15} \times 128)$ [bps]		
Data phase	Non-reverse output (default: high level) Reverse output (default: low level)		
Parity bit	No parity bit		
Stop bit	Appending 1 bit		
Data direction	MSB first		

Note Use this operation within a range that satisfies the conditions above and the peripheral functions characteristics in the electrical specifications (see **CHAPTER 37** or **CHAPTER 38 ELECTRICAL SPECIFICATIONS**). In addition, LIN communication is usually 2.4/9.6/19.2 kbps is often used.

Remark f_{MCK}: Operation clock frequency of target channel
f_{CLK}: System clock frequency

LIN stands for Local Interconnect Network and is a low-speed (1 to 20 kbps) serial communication protocol designed to reduce the cost of an automobile network. Communication of LIN is single-master communication and up to 15 slaves can be connected to one master. The slaves are used to control switches, actuators, and sensors, which are connected to the master via LIN.

Usually, the master is connected to a network such as CAN (Controller Area Network). A LIN bus is a single-wire bus to which nodes are connected via transceiver conforming to ISO9141.

According to the protocol of LIN, the master transmits a frame by attaching baud rate information to it. A slave receives this frame and corrects a baud rate error from the master. If the baud rate error of a slave is within ±15%, communication can be established.

Figure 19 - 131 outlines a transmission operation of LIN.

Figure 19 - 131 Transmission Operation of LIN

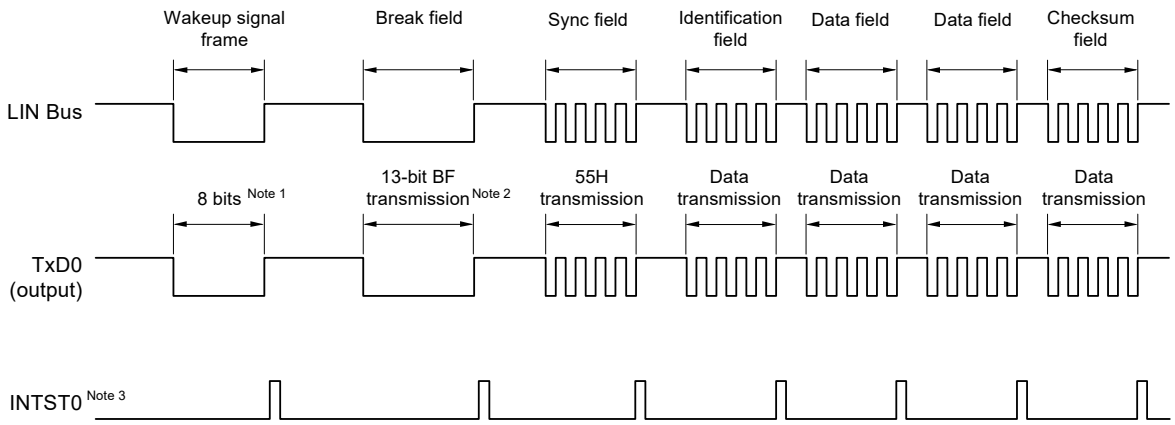

Note 1. Set the baud rate in accordance with the wakeup signal regulations and transmit data of 80H.

Note 2. A break field is defined to have a width of 13 bits and output a low level. Where the baud rate for main transfer is N [bps], therefore, the baud rate of the break field is calculated as follows.

(Baud rate of break field) = 9/13 × N

By transmitting data of 00H at this baud rate, a break field is generated.

Note 3. INTST0 is output upon completion of transmission. INTST0 is also output at BF transmission.

Remark The interval between fields is controlled by software.

Figure 19 - 132 Flowchart for LIN Transmission

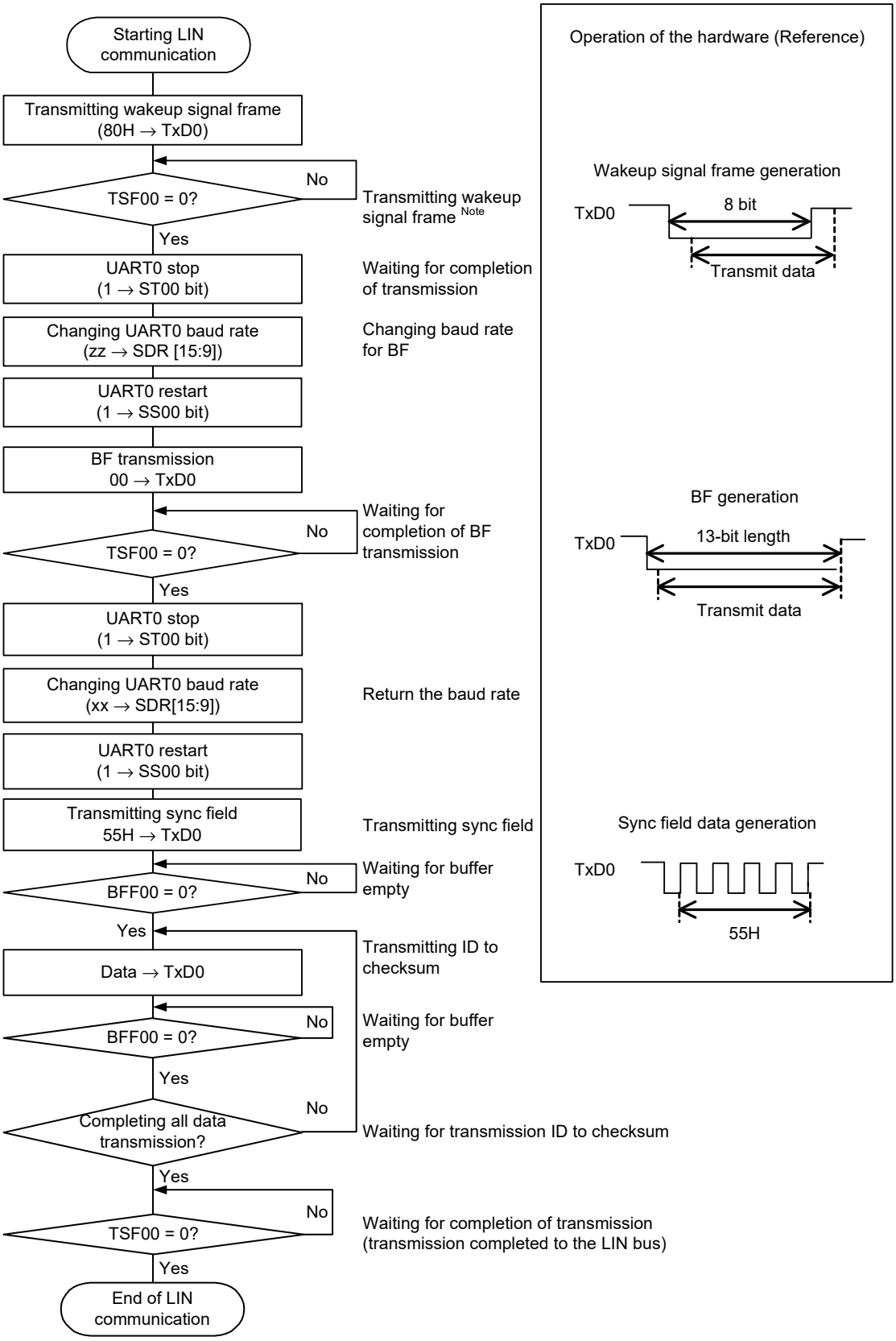

Note When LIN-bus start from sleep status only.

Remark Default setting of the UART is complete, and the flow from the transmission enable status.

19.8.2 LIN reception

Of UART reception, UART0 support LIN communication.

For LIN reception, channel 1 of unit 0 is used.

UART	UART0	UART1	UART2
Support of LIN communication	Supported	Not supported	Not supported
Target channel	Channel 1 of SAU0	—	—
Pins used	RxD0	—	—
Interrupt	INTSR0	—	—
	Transfer end interrupt only (Setting the buffer empty interrupt is prohibited.)		
Error interrupt	INTSRE0	—	—
Error detection flag	• Framing error detection flag (FEF01) • Overrun error detection flag (OVF01)		
Transfer data length	8 bits		
Transfer rate[Note]	Max. $f_{MCK}/6$ [bps] (SDR01 [15:9] = 2 or more), Min. $f_{CLK}/(2 \times 2^{15} \times 128)$ [bps]		
Data phase	Non-reverse output (default: high level) Reverse output (default: low level)		
Parity bit	No parity bit (The parity bit is not checked.)		
Stop bit	Appending 1 bit		
Data direction	LSB first		

Note Use this operation within a range that satisfies the conditions above and the peripheral functions characteristics in the electrical specifications (see **CHAPTER 37** or **CHAPTER 38 ELECTRICAL SPECIFICATIONS**).

Remark f_{MCK}: Operation clock frequency of target channel
f_{CLK}: System clock frequency

Figure 19 - 133 outlines a reception operation of LIN.

Figure 19 - 133 Reception Operation of LIN

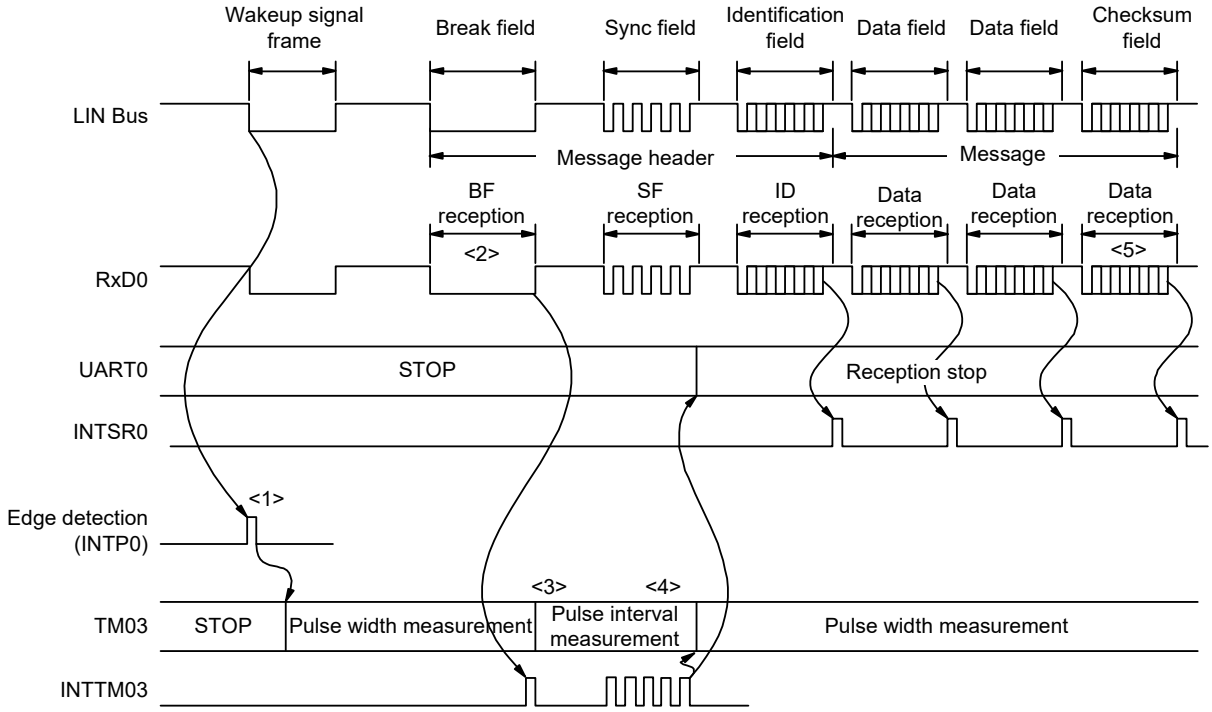

Here is the flow of signal processing.

<1> The wakeup signal is detected by detecting an interrupt edge (INTP0) on a pin. When the wakeup signal is detected, change TM03 to pulse width measurement upon detection of the wakeup signal to measure the low level width of the BF signal. Then wait for BF signal reception.

<2> TM03 starts measuring the low-level width upon detection of the falling edge of the BF signal, and then captures the data upon detection of the rising edge of the BF signal. The captured data is used to judge whether it is the BF signal.

<3> When the BF signal has been received normally, change TM03 to pulse interval measurement and measure the interval between the falling edges of the RxD0 signal in the Sync field four times (see **6.8.4 Operation as input pulse interval measurement**).

<4> Calculate a baud rate error from the bit interval of sync field (SF). Stop UART0 once and adjust (re-set) the baud rate.

<5> The checksum field should be distinguished by software. In addition, processing to initialize UART0 after the checksum field is received and to wait for reception of BF should also be performed by software.

Figure 19 - 134 Flowchart for LIN Reception

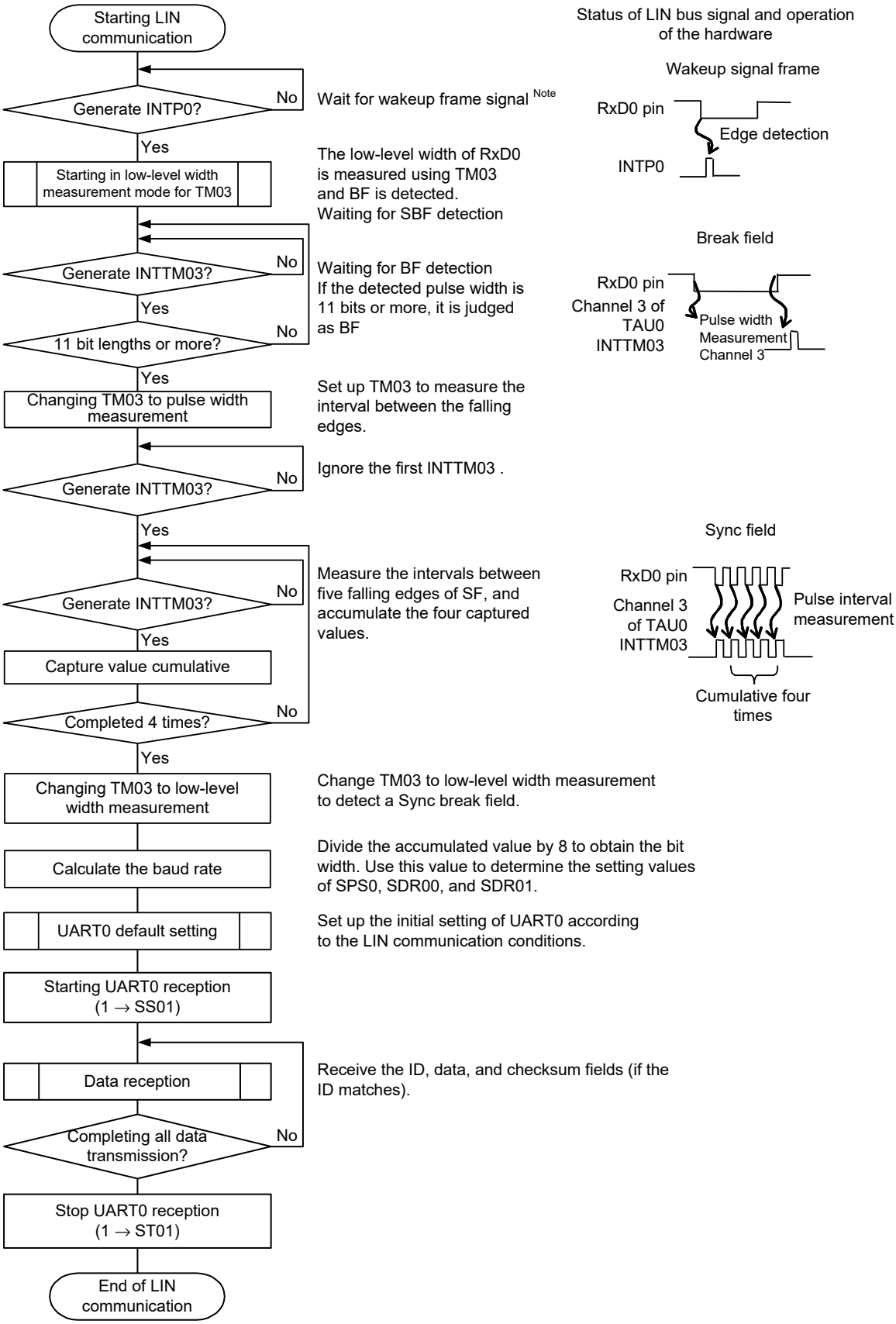

Note Required in the sleep status only.

Figure 19 - 135 shows the configuration of a port that manipulates reception of LIN.

The wakeup signal transmitted from the master of LIN is received by detecting an edge of an external interrupt (INTP0). The length of the sync field transmitted from the master can be measured by using the external event capture operation of the timer array unit 0 to calculate a baud-rate error.

By controlling switch of port input (ISC0/ISC1), the input source of port input (RxD0) for reception can be input to the external interrupt pin (INTP0) and timer array unit

Figure 19 - 135 Port Configuration for Manipulating Reception of LIN

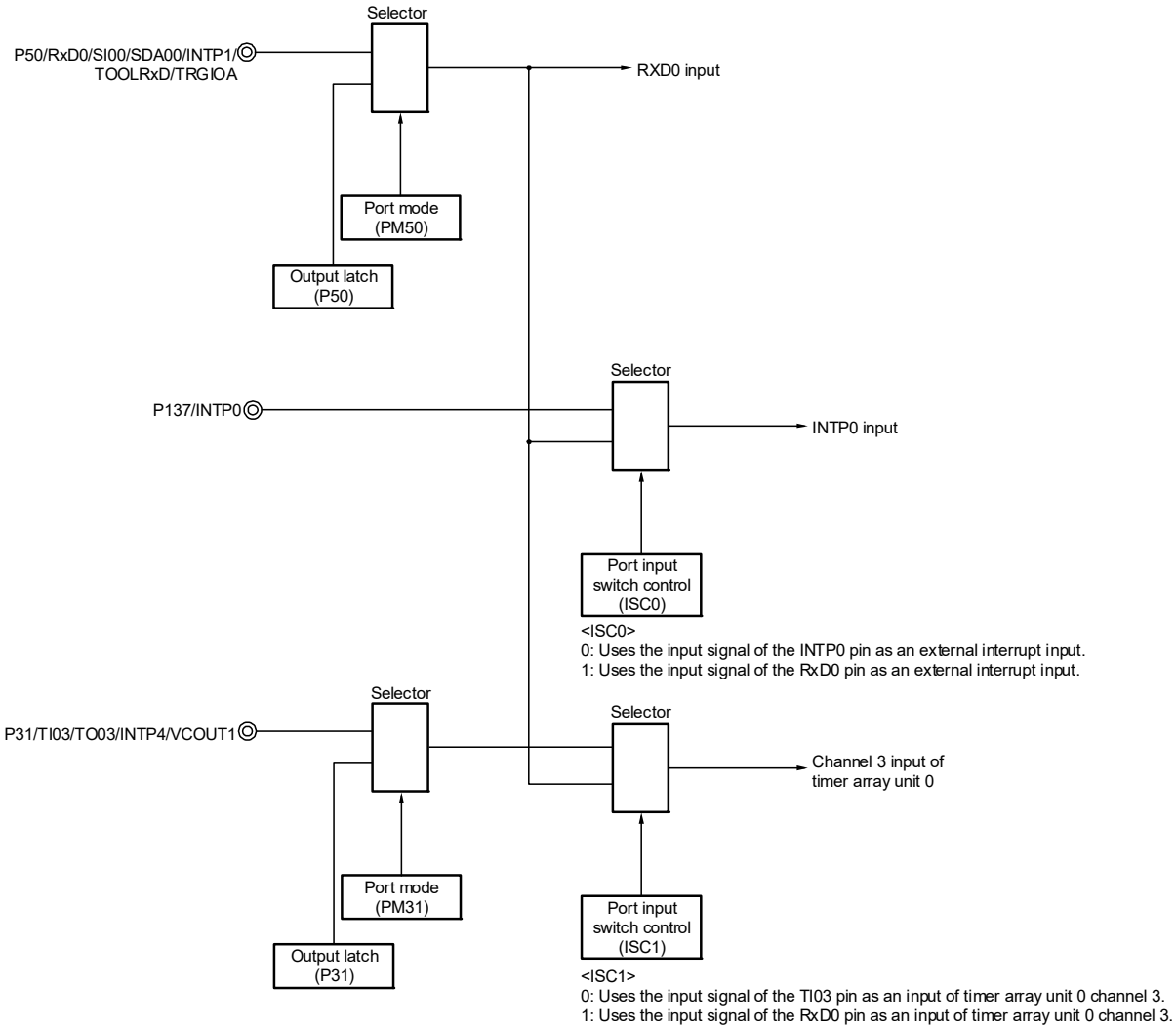

Remark ISC0, ISC1: Bits 0 and 1 of the input switch control register (ISC) (See **Figure 19 - 24**.)

The peripheral functions used for the LIN communication operation are as follows.

<Peripheral functions used>

- External interrupt (INTP0); Wakeup signal detection
  Usage: To detect an edge of the wakeup signal and the start of communication
- Channel 3 of timer array unit; Baud rate error detection, break field (BF) detection.
  Usage: To detect the length of the sync field (SF) and divide it by the number of bits in order to detect an error
  (The interval of the edge input to RxD0 is measured in the capture mode.)
  Measured the low-level width, determine whether break field (BF).
- Channels 0 and 1 (UART0) of serial array unit 0 (SAU0)

19.9 Operation of Simplified I²C (IIC00, IIC01, IIC10, IIC11, IIC20, IIC21) Communication

This is a clocked communication function to communicate with two or more devices by using two lines: serial clock (SCL) and serial data (SDA). This communication function is designed to execute single communication with devices such as EEPROM, flash memory, and A/D converter, and therefore, can be used only by the master.
Make sure by using software, as well as operating the control registers, that the AC specifications of the start and stop conditions are observed.

[Data transmission/reception]
- Master transmission, master reception (only master function with a single master)
- ACK output function[Note] and ACK detection function
- Data length of 8 bits
  (When an address is transmitted, the address is specified by the higher 7 bits, and the least significant bit is used for R/W control.)
- Generation of start condition and stop condition for software

[Interrupt function]
- Transfer end interrupt

[Error detection flag]
- Overrun error
- ACK error

* [Functions not supported by simplified I²C]
- Slave transmission, slave reception
- Multi-master function (arbitration loss detection function)
- Wait detection function

Note When receiving the last data, ACK will not be output if 0 is written to the SOEmn (SOEm register) bit and serial communication data output is stopped. See the processing flow in **19.9.3 (2)** for details.

Remark m: Unit number (m = 0, 1), n: Channel number (n = 0 to 3), mn = 00 to 03, 10, 11

The channel supporting simplified I²C (IIC00, IIC01, IIC10, IIC11, IIC20, IIC21) is channels 0 to 3 of SAU0 and channels 0 to 3 of SAU1.

• 24, 32, 36-pin products

Unit	Channel	Used as simplified SPI (CSI)	Used as UART	Used as Simplified I²C
0	0	CSI00 (supporting slave select input)	UART0 (supporting LIN-bus)	IIC00
	1	—		—
	2	—	UART1	—
	3	CSI11		IIC11
1	0	CSI20	UART2	IIC20
	1	—		—

• 48-pin products

Unit	Channel	Used as simplified SPI (CSI)	Used as UART	Used as Simplified I²C
0	0	CSI00 (supporting slave select input)	UART0 (supporting LIN-bus)	IIC00
	1	CSI01		IIC01
	2	—	UART1	—
	3	CSI11		IIC11
1	0	CSI20	UART2	IIC20
	1	CSI21		IIC21

• 64-pin products

Unit	Channel	Used as simplified SPI (CSI)	Used as UART	Used as Simplified I²C
0	0	CSI00 (supporting slave select input)	UART0 (supporting LIN-bus)	IIC00
	1	CSI01		IIC01
	2	CSI10	UART1	IIC10
	3	CSI11		IIC11
1	0	CSI20	UART2	IIC20
	1	CSI21		IIC21

Simplified I²C (IIC00, IIC01, IIC10, IIC11, IIC20, IIC21) performs the following four types of communication operations.

• Address field transmission (See **19.9.1**.)
• Data transmission (See **19.9.2**.)
• Data reception (See **19.9.3**.)
• Stop condition generation (See **19.9.4**.)

19.9.1 Address field transmission

Address field transmission is a transmission operation that first executes in I²C communication to identify the target for transfer (slave). After a start condition is generated, an address (7 bits) and a transfer direction (1 bit) are transmitted in one frame.

Simplified I²C	IIC00	IIC01	IIC10	IIC11	IIC20	IIC21
Target channel	Channel 0 of SAU0	Channel of SAU0	Channel 2 of SAU0	Channel 3 of SAU0	Channel 0 of SAU1	Channel 1 of SAU1
Pins used	SCL00, SDA00Note 1	SCL01, SDA01Note 1	SCL10, SDA10Note 1	SCL11, SDA11Note 1	SCL20, SDA20Note 1	SCL21, SDA21Note 1
Interrupt	INTIIC00	INTIIC01	INTIIC10	INTIIC11	INTIIC20	INTIIC21
	Transfer end interrupt only (Setting the buffer empty interrupt is prohibited.)					
Error detection flag	ACK error detection flag (PEFmn)					
Transfer data length	8 bits (transmitted with specifying the higher 7 bits as address and the least significant bit as R/W control)					
Transfer rateNote 2	Max. f_{MCK}/4 [Hz] (SDRmn[15:9] = 1 or more) f_{MCK}: Operation clock frequency of target channel However, the following condition must be satisfied in each mode of I²C. • Max. 1 MHz (fast mode plus) • Max. 400 kHz (fast mode) • Max. 100 kHz (standard mode)					
Data level	Non-reversed output (default: high level)					
Parity bit	No parity bit					
Stop bit	Appending 1 bit (for ACK reception timing)					
Data direction	MSB first					

Note 1. To perform communication via simplified I²C, set the N-ch open-drain output (V_{DD} tolerance (24 to 48-pin products)/EV_{DD} tolerance (64-pin products)) mode (POMxx = 1) with the port output mode register (POMxx). For details, see **4.3 Registers Controlling Port Function** and **4.5 Register Settings When Using Alternate Function**.
When IIC00, IIC10, IIC20 is communicating with an external device with a different potential, set the N-ch open-drain output (V_{DD} tolerance (24 to 48-pin products)/EV_{DD} tolerance (64-pin products)) mode (POMxx = 1) also for the clock input/output pins (SCL00, SCL10, SCL20).
For details, see **4.4.5 Handling different potential (1.8 V, 2.5 V, 3 V) by using I/O buffers**.

Note 2. Use this operation within a range that satisfies the conditions above and the peripheral functions characteristics in the electrical specifications (see **CHAPTER 37** or **CHAPTER 38 ELECTRICAL SPECIFICATIONS**).

Remark m: Unit number (m = 0, 1), n: Channel number (n = 0 to 3), mn = 00 to 03, 10, 11

(1) Register setting

Figure 19 - 136 Example of Contents of Registers for Address Field Transmission of Simplified I²C (IIC00, IIC01, IIC10, IIC11, IIC20, IIC21)

(a) Serial mode register mn (SMRmn)

	15	14	13	12	11	10	9	8	7	6	5	4	3	2	1	0
SMRmn	CKSmn 0/1	CCSmn 0	0	0	0	0	0	STSmn 0 Note 1	0	SISmn0 0 Note 1	1	0	0	MDmn2 1	MDmn1 0	MDmn0 0

Operation clock (f_{MCK}) of channel n
0: Prescaler output clock CKm0 set by the SPSm register
1: Prescaler output clock CKm1 set by the SPSm register

Operation mode of channel n
0: Transfer end interrupt

(b) Serial communication operation setting register mn (SCRmn)

	15	14	13	12	11	10	9	8	7	6	5	4	3	2	1	0
SCRmn	TXEmn 1	RXEmn 0	DAPmn 0	CKPmn 0	0	EOCmn 0	PTCmn1 0	PTCmn0 0	DIRmn 0	0	SLCmn1 0 Note 2	SLCmn0 1	0	1	DLSmn1 1 Note 3	DLSmn0 1

Setting of parity bit
00B: No parity

Setting of stop bit
01B: Appending 1 bit (ACK)

(c) Serial data register mn (SDRmn) (lower 8 bits: SIOr)

	15	14	13	12	11	10	9	8	7	6	5	4	3	2	1	0
SDRmn	Baud rate setting							0	Transmit data setting (address + R/W)							

SIOr

(d) Serial output register m (SOm)

	15	14	13	12	11	10	9	8	7	6	5	4	3	2	1	0
SOm	0	0	0	0	CKOm3 0/1	CKOm2 0/1	CKOm1 0/1	CKOm0 0/1	0	0	0	0	SOm3 0/1	SOm2 0/1	SOm1 0/1	SOm0 0/1

Start condition is generated by manipulating the SOmn bit.

(e) Serial output enable register m (SOEm)

	15	14	13	12	11	10	9	8	7	6	5	4	3	2	1	0
SOEm	0	0	0	0	0	0	0	0	0	0	0	0	SOEm3 0/1	SOEm2 0/1	SOEm1 0/1	SOEm0 0/1

SOEmn = 0 until the start condition is generated, and SOEmn = 1 after generation.

(f) Serial channel start register m (SSm)... Sets only the bits of the target channel is 1.

	15	14	13	12	11	10	9	8	7	6	5	4	3	2	1	0
SSm	0	0	0	0	0	0	0	0	0	0	0	0	SSm3 0/1	SSm2 0/1	SSm1 0/1	SSm0 0/1

Note 1. Only provided for the SMR00, SMR03, and SMR11 registers.
Note 2. Only provided for the SCR00, SCR02, and SCR10 registers.
Note 3. Only provided for the SCR00 and SCR01 registers. This bit is fixed to 1 for the other registers.

Remark 1. m: Unit number (m = 0, 1), n: Channel number (n = 0 to 3), r: IIC number (r = 00, 01, 10, 11, 20, 21)
mn = 00 to 03, 10, 11

Remark 2. ■: Setting is fixed in the IIC mode,
▒: Setting disabled (set to the initial value)
×: Bit that cannot be used in this mode (set to the initial value when not used in any mode)
0/1: Set to 0 or 1 depending on the usage of the user

(2) Operation procedure

Figure 19 - 137 Initial Setting Procedure for Address Field Transmission

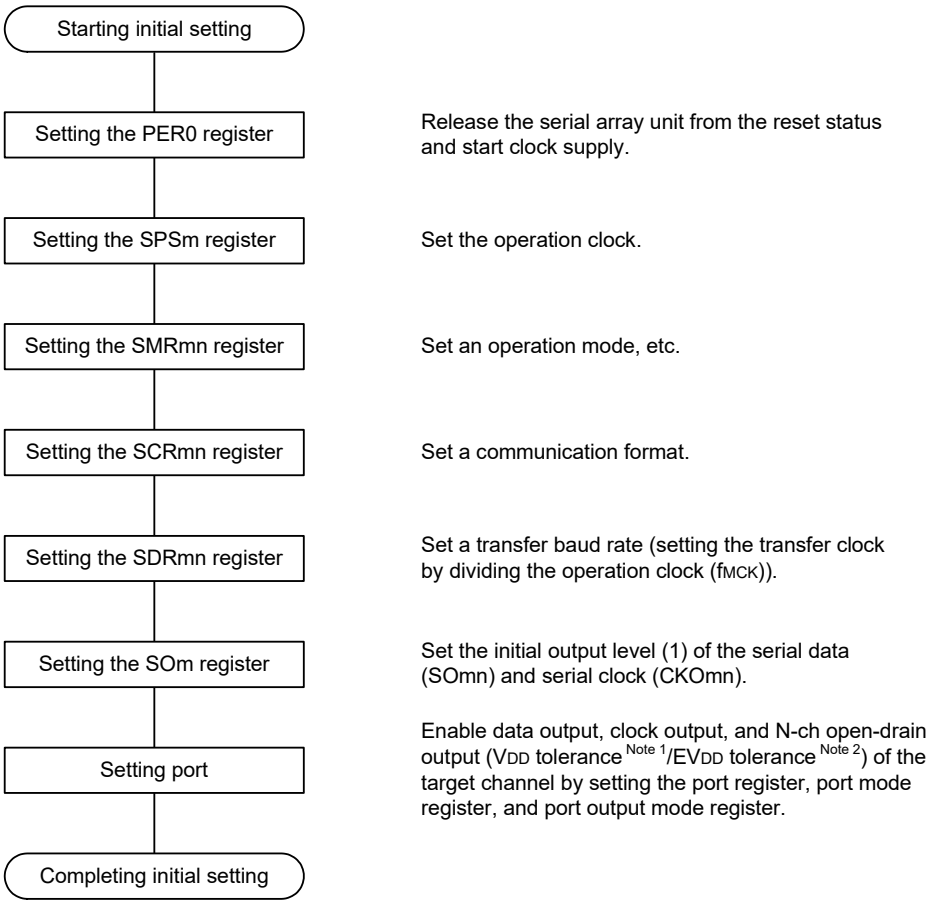

Note 1. 24 to 48-pin products

Note 2. 64-pin products

Remark At the end of the initial setting, the simplified I²C (IIC00, IIC01, IIC10, IIC11, IIC20, IIC21) must be set so that output is disabled and operations are stopped.

(3) Processing flow

Figure 19 - 138 Timing Chart of Address Field Transmission

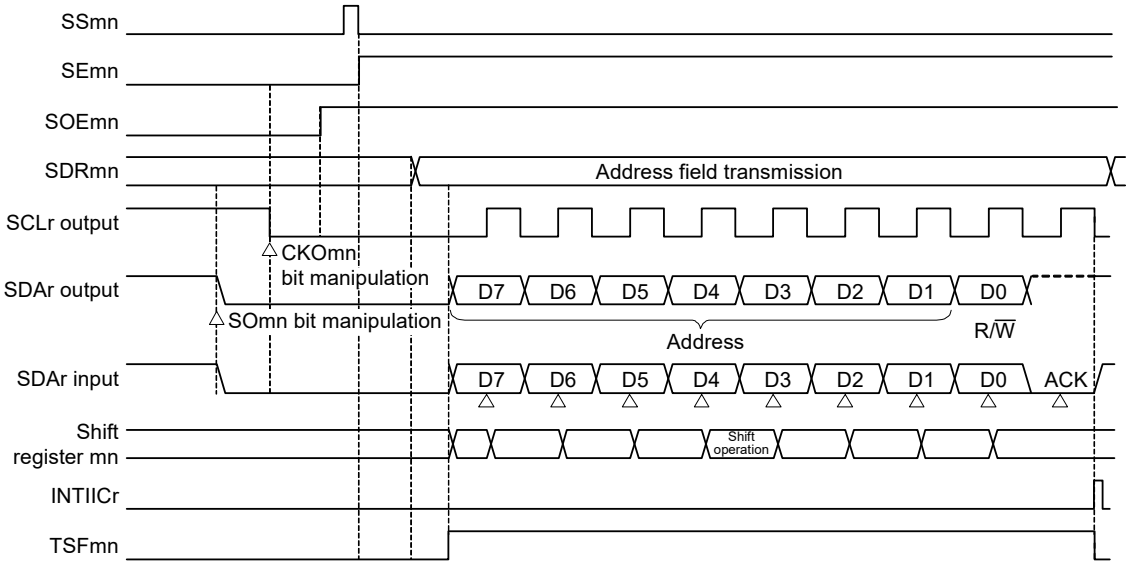

Remark m: Unit number (m = 0, 1), n: Channel number (n = 0 to 3), r: IIC number (r = 00, 01, 10, 11, 20, 21)
mn = 00 to 03, 10, 11

Figure 19 - 139 Flowchart of Address Field Transmission

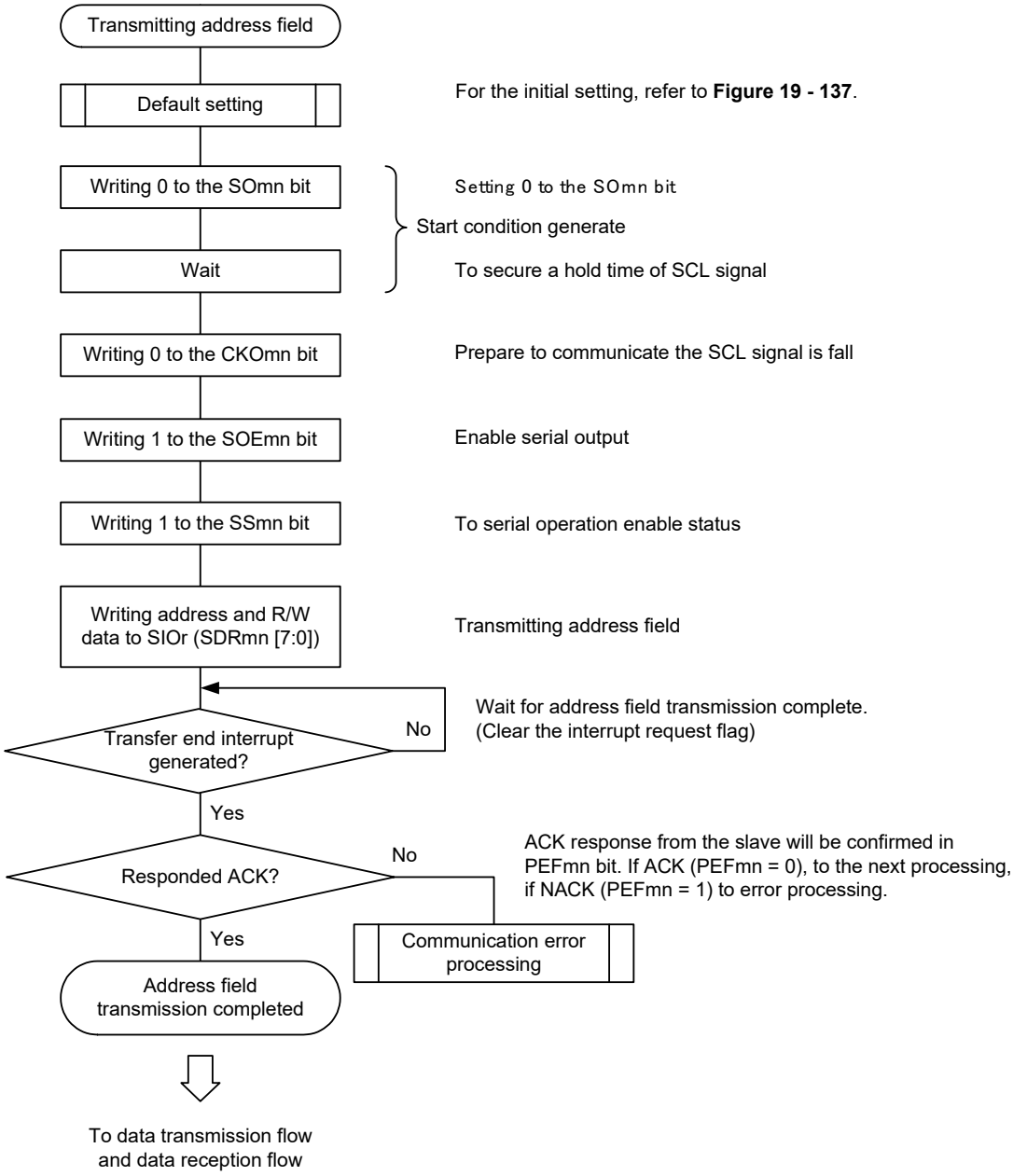

19.9.2 Data transmission

Data transmission is an operation to transmit data to the target for transfer (slave) after transmission of an address field. After all data are transmitted to the slave, a stop condition is generated and the bus is released.

Simplified I²C	IIC00	IIC01	IIC10	IIC11	IIC20	IIC21
Target channel	Channel 0 of SAU0	Channel 1 of SAU0	Channel 2 of SAU0	Channel 3 of SAU0	Channel 0 of SAU1	Channel 1 of SAU1
Pins used	SCL00, SDA00Note 1	SCL01, SDA01Note 1	SCL10, SDA10Note 1	SCL11, SDA11Note 1	SCL20, SDA20Note 1	SCL21, SDA21Note 1
Interrupt	INTIIC00	INTIIC01	INTIIC10	INTIIC11	INTIIC20	INTIIC21
	Transfer end interrupt only (Setting the buffer empty interrupt is prohibited.)					
Error detection flag	ACK error flag (PEFmn)					
Transfer data length	8 bits					
Transfer rateNote 2	Max. f_{MCK}/4 [Hz] (SDRmn[15:9] = 1 or more) f_{MCK}: Operation clock frequency of target channel However, the following condition must be satisfied in each mode of I²C. • Max. 1 MHz (fast mode plus) • Max. 400 kHz (fast mode) • Max. 100 kHz (standard mode)					
Data level	Non-reverse output (default: high level)					
Parity bit	No parity bit					
Stop bit	Appending 1 bit (for ACK reception timing)					
Data direction	MSB first					

Note 1. To perform communication via simplified I²C, set the N-ch open-drain output (V_{DD} tolerance (24 to 48-pin products)/EV_{DD} tolerance (64-pin products)) mode (POMxx = 1) with the port output mode register (POMxx). For details, see **4.3 Registers Controlling Port Function** and **4.5 Register Settings When Using Alternate Function**.
When IIC00, IIC10, IIC20 is communicating with an external device with a different potential, set the N-ch open-drain output (V_{DD} tolerance (24 to 48-pin products)/EV_{DD} tolerance (64-pin products)) mode (POMxx = 1) also for the clock input/output pins (SCL00, SCL10, SCL20).
For details, see **4.4.5 Handling different potential (1.8 V, 2.5 V, 3 V) by using I/O buffers**.

Note 2. Use this operation within a range that satisfies the conditions above and the peripheral functions characteristics in the electrical specifications (see **CHAPTER 37** or **CHAPTER 38 ELECTRICAL SPECIFICATIONS**).

Remark m: Unit number (m = 0, 1), n: Channel number (n = 0 to 3), mn = 00 to 03, 10, 11

(1) Register setting

Figure 19 - 140 Example of Contents of Registers for Data Transmission of Simplified I²C (IIC00, IIC01, IIC10, IIC11, IIC20, IIC21)

(a) Serial mode register mn (SMRmn)... Do not manipulate this register during data transmission/reception.

	15	14	13	12	11	10	9	8	7	6	5	4	3	2	1	0
SMRmn	CKSmn 0/1	CCSmn 0	0	0	0	0	0	STSmn 0 Note 1	0	SISmn0 0 Note 1	1	0	0	MDmn2 1	MDmn1 0	MDmn0 0

(b) Serial communication operation setting register mn (SCRmn)... Do not manipulate the bits of this register, except the TXEmn and RXEmn bits, during data transmission/reception.

	15	14	13	12	11	10	9	8	7	6	5	4	3	2	1	0
SCRmn	TXEmn 1	RXEmn 0	DAPmn 0	CKPmn 0	0	EOCmn 0	PTCmn1 0	PTCmn0 0	DIRmn 0	0	SLCmn1 0 Note 2	SLCmn0 1	0	1	DLSmn1 1 Note 3	DLSmn0 1

(c) Serial data register mn (SDRmn) (lower 8 bits: SIOr)... During data transmission/reception, valid only lower 8-bits (SIOr).

	15	14	13	12	11	10	9	8	7	6	5	4	3	2	1	0
SDRmn	Baud rate setting Note 4							0	Transmit data setting							

SIOr

(d) Serial output register m (SOm)... Do not manipulate this register during data transmission/reception.

	15	14	13	12	11	10	9	8	7	6	5	4	3	2	1	0
SOm	0	0	0	0	CKOm3 0/1 Note 5	CKOm2 0/1 Note 5	CKOm1 0/1 Note 5	CKOm0 0/1 Note 5	0	0	0	0	SOm3 0/1 Note 5	SOm2 0/1 Note 5	SOm1 0/1 Note 5	SOm0 0/1 Note 5

(e) Serial output enable register m (SOEm)... Do not manipulate this register during data transmission/reception

	15	14	13	12	11	10	9	8	7	6	5	4	3	2	1	0
SOEm	0	0	0	0	0	0	0	0	0	0	0	0	SOEm3 1	SOEm2 1	SOEm1 1	SOEm0 1

(f) Serial channel start register m (SSm)... Do not manipulate this register during data transmission/reception.

	15	14	13	12	11	10	9	8	7	6	5	4	3	2	1	0
SSm	0	0	0	0	0	0	0	0	0	0	0	0	SSm3 0/1	SSm2 0/1	SSm1 0/1	SSm0 0/1

Note 1. Only provided for the SMR01, SMR03, and SMR11 registers.
Note 2. Only provided for the SCR00, SCR02, and SCR10 registers.
Note 3. Only provided for the SCR00 and SCR01 registers. This bit is fixed to 1 for the other registers.
Note 4. Because the setting is completed by address field transmission, setting is not required.
Note 5. The value varies depending on the communication data during communication operation.

Remark 1. m: Unit number (m = 0, 1), n: Channel number (n = 0 to 3), r: IIC number (r = 00, 01, 10, 11, 20, 21)
mn = 00 to 03, 10, 11

Remark 2. ■: Setting is fixed in the IIC mode,
■: Setting disabled (set to the initial value)
×: Bit that cannot be used in this mode (set to the initial value when not used in any mode)
0/1: Set to 0 or 1 depending on the usage of the user

(2) Processing flow

Figure 19 - 141 Timing Chart of Data Transmission

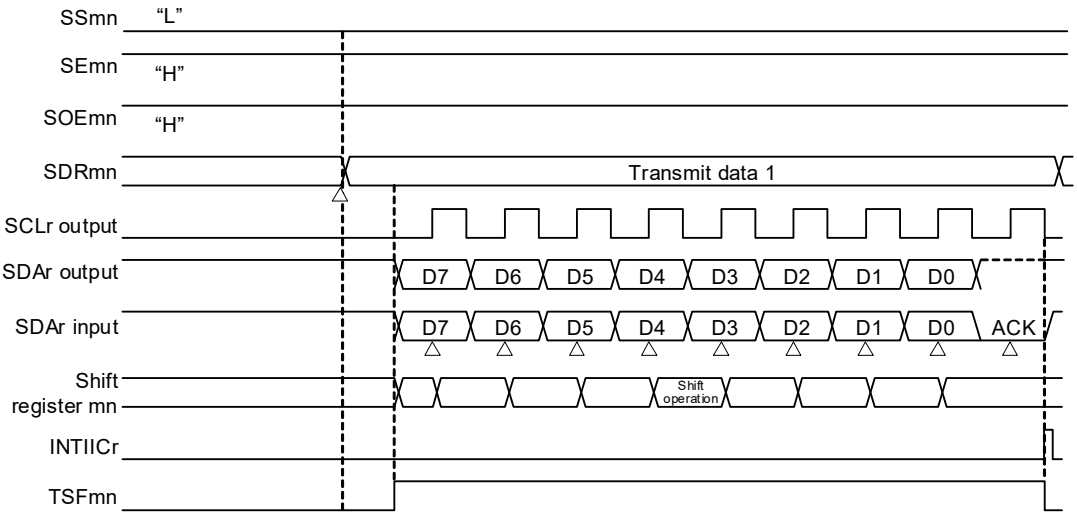

Figure 19 - 142 Flowchart of Data Transmission

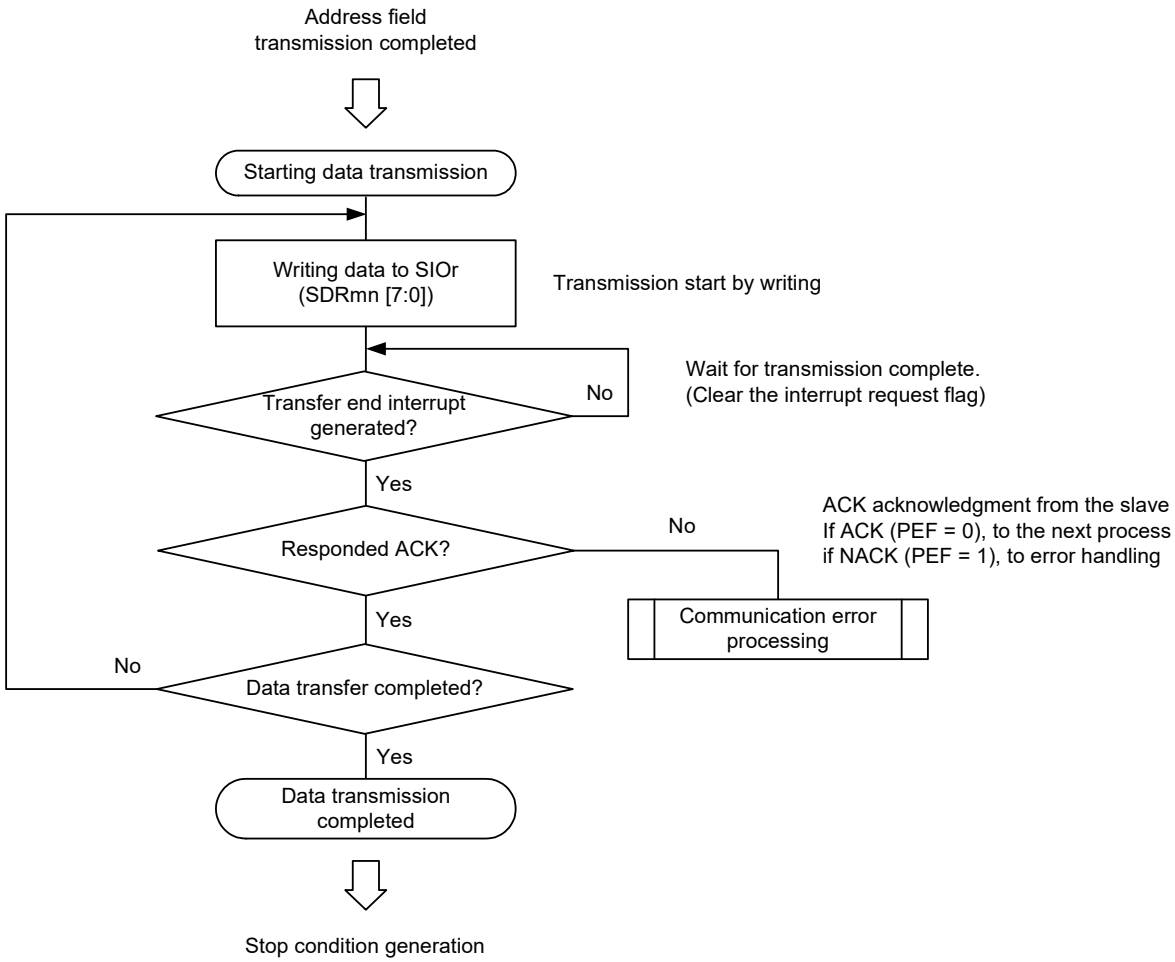

19.9.3 Data reception

Data reception is an operation to receive data to the target for transfer (slave) after transmission of an address field. After all data are received to the slave, a stop condition is generated and the bus is released.

Simplified I²C	IIC00	IIC01	IIC10	IIC11	IIC20	IIC21
Target channel	Channel 0 of SAU0	Channel 1 of SAU0	Channel 2 of SAU0	Channel 3 of SAU0	Channel 0 of SAU1	Channel 1 of SAU1
Pins used	SCL00, SDA00Note 1	SCL01, SDA01Note 1	SCL10, SDA10Note 1	SCL11, SDA11Note 1	SCL20, SDA20Note 1	SCL21, SDA21Note 1
Interrupt	INTIIC00	INTIIC01	INTIIC10	INTIIC11	INTIIC20	INTIIC21
	Transfer end interrupt only (Setting the buffer empty interrupt is prohibited.)					
Error detection flag	Overrun error detection flag (OVFmn) only					
Transfer data length	8 bits					
Transfer rateNote 2	Max. f_{MCK}/4 [Hz] (SDRmn[15:9] = 1 or more) f_{MCK}: Operation clock frequency of target channel However, the following condition must be satisfied in each mode of I²C. • Max. 1 MHz (fast mode plus) • Max. 400 kHz (fast mode) • Max. 100 kHz (standard mode)					
Data level	Non-reverse output (default: high level)					
Parity bit	No parity bit					
Stop bit	Appending 1 bit (ACK transmission)					
Data direction	MSB first					

Note 1. To perform communication via simplified I²C, set the N-ch open-drain output (V_{DD} tolerance (24 to 48-pin products)/EV_{DD} tolerance (64-pin products)) mode (POMxx = 1) with the port output mode register (POMxx). For details, see **4.3 Registers Controlling Port Function** and **4.5 Register Settings When Using Alternate Function**.
When IIC00, IIC10, IIC20 is communicating with an external device with a different potential, set the N-ch open-drain output (V_{DD} tolerance (24 to 48-pin products)/EV_{DD} tolerance (64-pin products)) mode (POMxx = 1) also for the clock input/output pins (SCL00, SCL10, SCL20).
For details, see **4.4.5 Handling different potential (1.8 V, 2.5 V, 3 V) by using I/O buffers**.

Note 2. Use this operation within a range that satisfies the conditions above and the peripheral functions characteristics in the electrical specifications (see **CHAPTER 37** or **CHAPTER 38 ELECTRICAL SPECIFICATIONS**).

Remark m: Unit number (m = 0, 1), n: Channel number (n = 0 to 3), mn = 00 to 03, 10, 11

(1) Register setting

Figure 19 - 143 Example of Contents of Registers for Data Reception of Simplified I²C (IIC00, IIC01, IIC10, IIC11, IIC20, IIC21)

(a) Serial mode register mn (SMRmn)... Do not manipulate this register during data transmission/reception.

	15	14	13	12	11	10	9	8	7	6	5	4	3	2	1	0
SMRmn	CKSmn 0/1	CCSmn 0	0	0	0	0	0	STSmn 0Note 1	0	SISmn0 0Note 1	1	0	0	MDmn2 1	MDmn1 0	MDmn0 0

(b) Serial communication operation setting register mn (SCRmn)... Do not manipulate the bits of this register, except the TXEmn and RXEmn bits, during data transmission/reception.

	15	14	13	12	11	10	9	8	7	6	5	4	3	2	1	0
SCRmn	TXEmn 0	RXEmn 1	DAPmn 0	CKPmn 0	0	EOCmn 0	PTCmn1 0	PTCmn0 0	DIRmn 0	0	SLCmn1 0Note 2	SLCmn0 1	0	1	DLSmn1 1Note 3	DLSmn0 1

(c) Serial data register mn (SDRmn) (lower 8 bits: SIOr)

	15	14	13	12	11	10	9	8	7	6	5	4	3	2	1	0
SDRmn	Baud rate settingNote 4							0	Dummy transmit data setting (FFH)							

SIOr

(d) Serial output register m (SOm)... Do not manipulate this register during data transmission/reception.

	15	14	13	12	11	10	9	8	7	6	5	4	3	2	1	0
SOm	0	0	0	0	CKOm3 0/1Note 5	CKOm2 0/1Note 5	CKOm1 0/1Note 5	CKOm0 0/1Note 5	0	0	0	0	SOm3 0/1Note 5	SOm2 0/1Note 5	SOm1 0/1Note 5	SOm0 0/1Note 5

(e) Serial output enable register m (SOEm)... Do not manipulate this register during data transmission/reception.

	15	14	13	12	11	10	9	8	7	6	5	4	3	2	1	0
SOEm	0	0	0	0	0	0	0	0	0	0	0	0	SOEm3 0/1	SOEm2 0/1	SOEm1 0/1	SOEm0 0/1

(f) Serial channel start register m (SSm)... Do not manipulate this register during data transmission/reception.

	15	14	13	12	11	10	9	8	7	6	5	4	3	2	1	0
SSm	0	0	0	0	0	0	0	0	0	0	0	0	SSm3 0/1	SSm2 0/1	SSm1 0/1	SSm0 0/1

Note 1. Only provided for the SMR01, SMR03, and SMR11 registers.

Note 2. Only provided for the SCR00, SCR02, and SCR10 registers.

Note 3. Only provided for the SCR00 and SCR01 registers. This bit is fixed to 1 for the other registers.

Note 4. The baud rate setting is not required because the baud rate has already been set when the address field was transmitted.

Note 5. The value varies depending on the communication data during communication operation.

Remark 1. m: Unit number (m = 0, 1), n: Channel number (n = 0 to 3), r: IIC number (r = 00, 01, 10, 11, 20, 21)
mn = 00 to 03, 10, 11

Remark 2. ■: Setting is fixed in the IIC mode,
▒: Setting disabled (set to the initial value)
×: Bit that cannot be used in this mode (set to the initial value when not used in any mode)
0/1: Set to 0 or 1 depending on the usage of the user

(2) Processing flow

Figure 19 - 144 Timing Chart of Data Reception

(a) When starting data reception

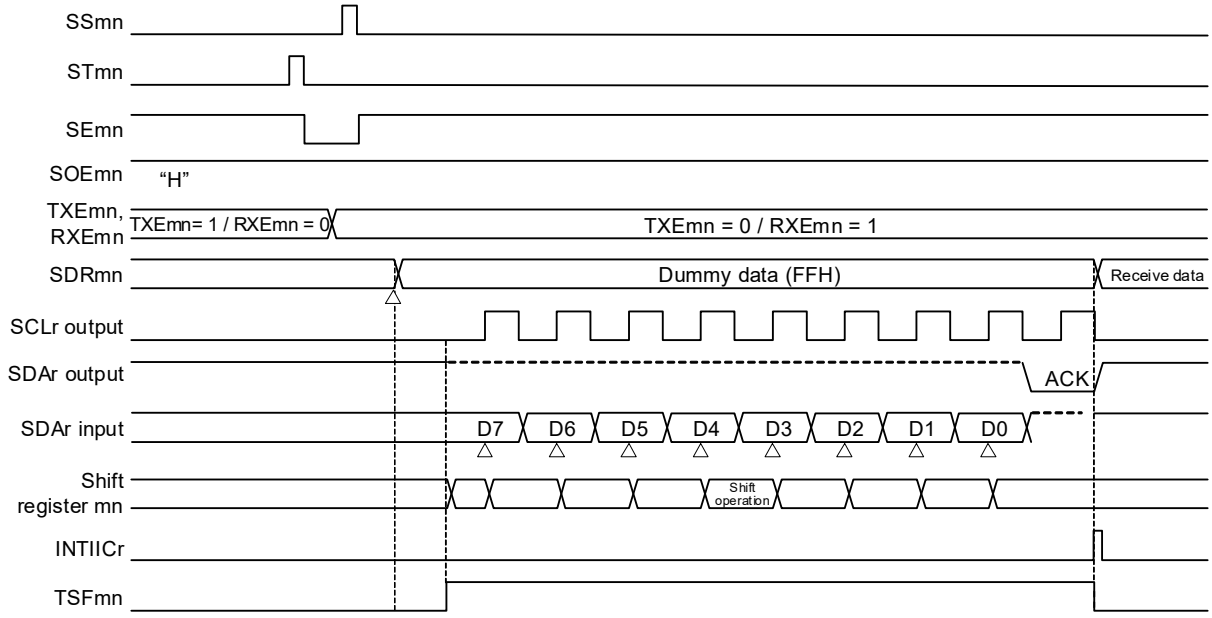

(b) When receiving last data

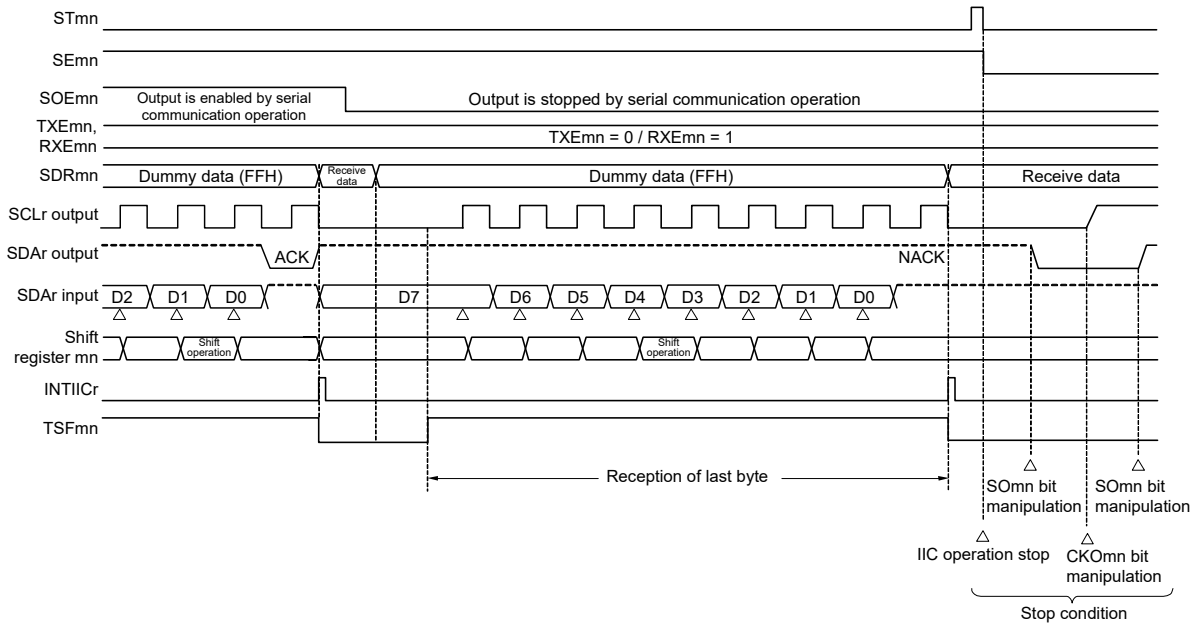

Remark m: Unit number (m = 0, 1), n: Channel number (n = 0 to 3), r: IIC number (r = 00, 01, 10, 11, 20, 21)
mn = 00 to 03, 10, 11

Figure 19 - 145 Flowchart of Data Reception

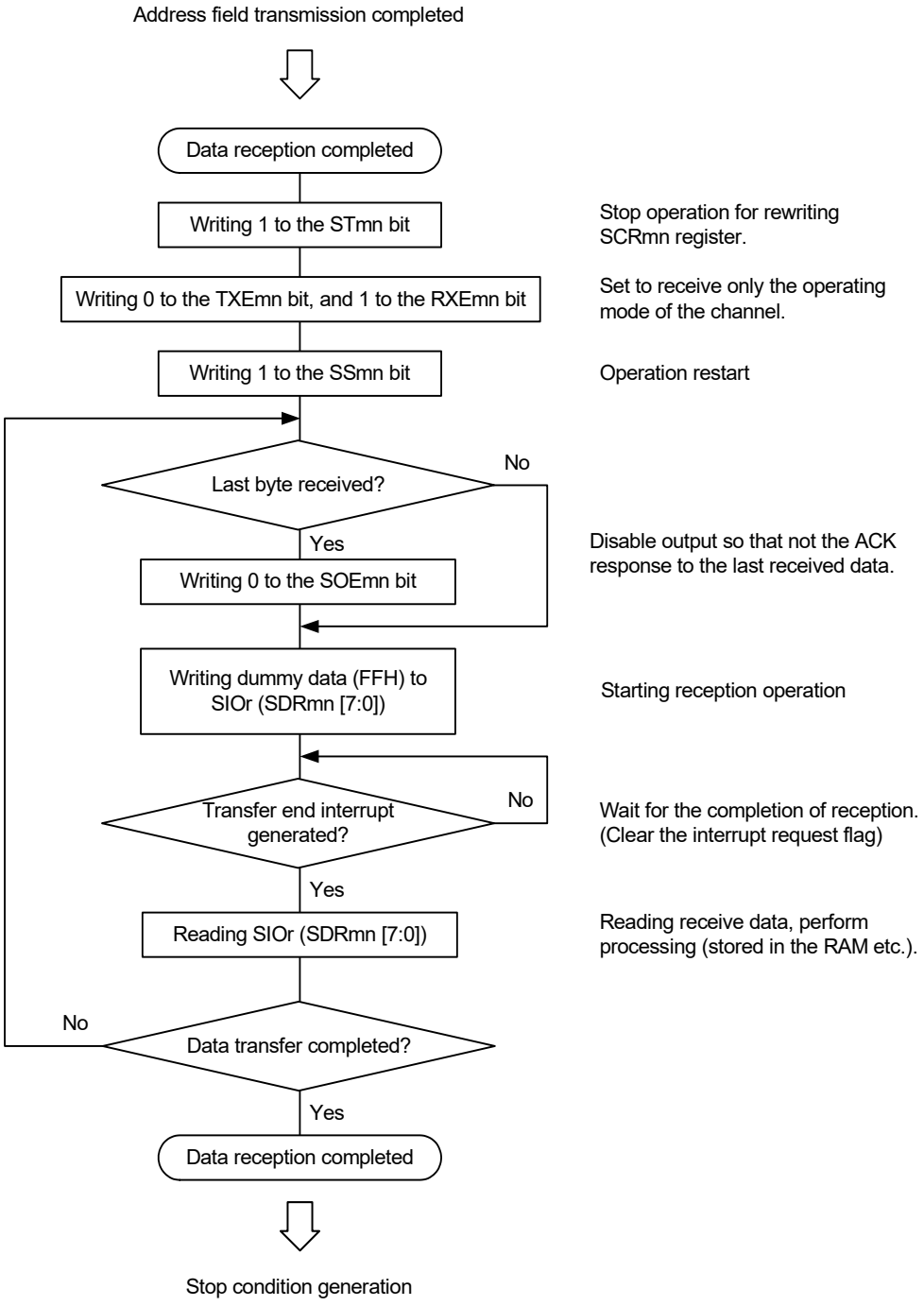

Caution **ACK is not output when the last data is received (NACK). Communication is then completed by setting "1" to the STmn bit of serial channel stop register m (STm) to stop operation and generating a stop condition.**

19.9.4 Stop condition generation

After all data are transmitted to or received from the target slave, a stop condition is generated and the bus is released.

(1) Processing flow

Figure 19 - 146 Timing Chart of Stop Condition Generation

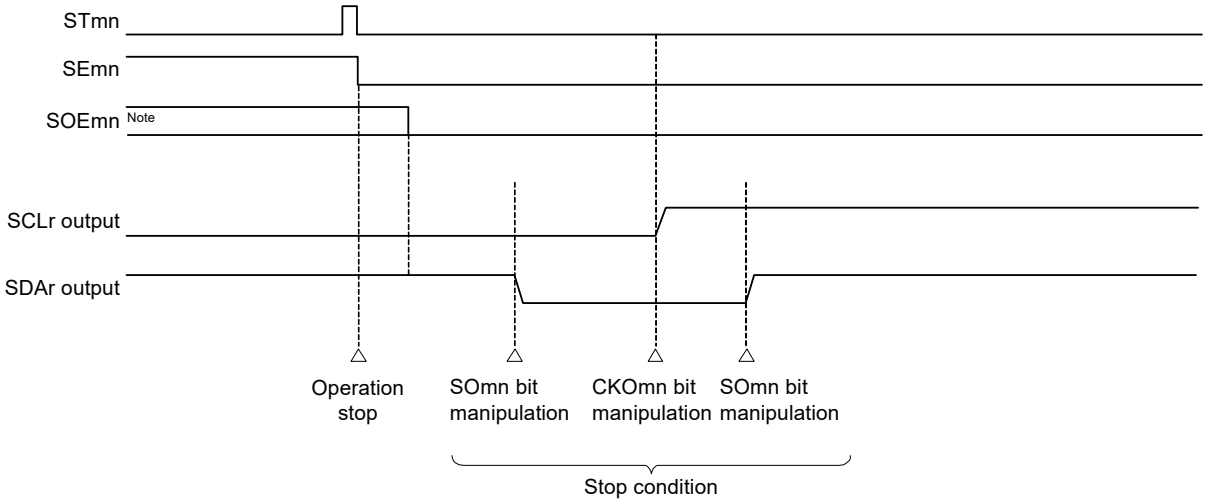

Note During a receive operation, the SOEmn bit of serial output enable register m (SOEm) is cleared to 0 before receiving the last data.

Figure 19 - 147 Flowchart of Stop Condition Generation

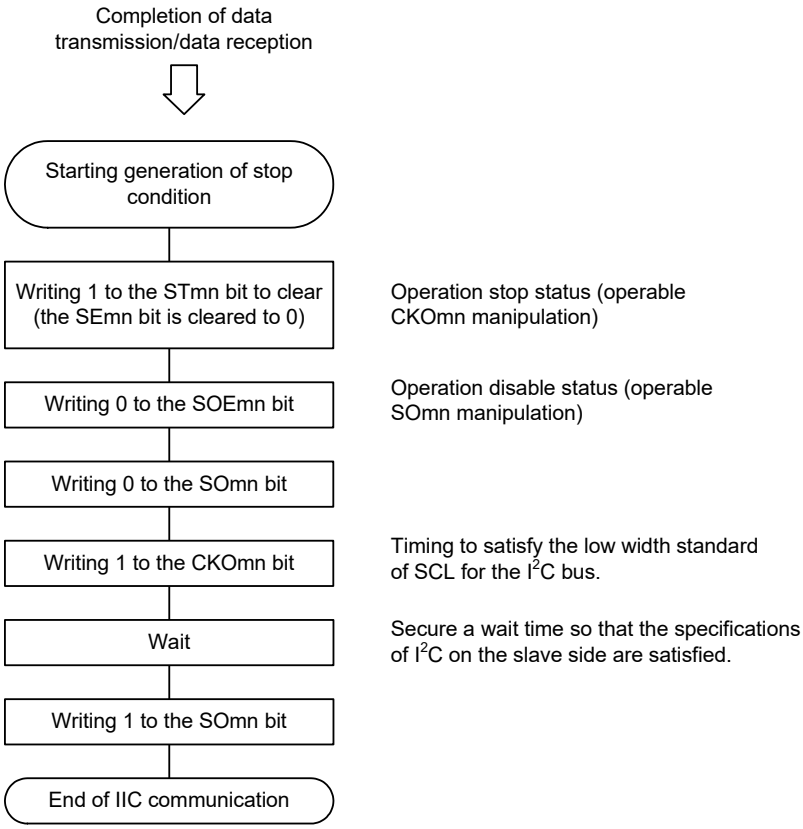

19.9.5 Calculating transfer rate

The transfer rate for simplified I²C (IIC00, IIC01, IIC10, IIC11, IIC20, IIC21) communication can be calculated by the following expressions.

(Transfer rate) = {Operation clock (f_{MCK}) frequency of target channel} ÷ (SDRmn[15:9] + 1) ÷ 2

Caution SDRmn[15:9] must not be set to 0000000B. Be sure to set a value of 0000001B or greater for SDRmn[15:9]. The duty ratio of the SCL signal output by the simplified I²C is 50%. The I²C bus specifications define that the low-level width of the SCL signal is longer than the high-level width. If 400 kbps (fast mode) or 1 Mbps (fast mode plus) is specified, therefore, the low-level width of the SCL output signal becomes shorter than the value specified in the I²C bus specifications. Make sure that the SDRmn[15:9] value satisfies the I²C bus specifications.

Remark 1. The value of SDRmn[15:9] is the value of bits 15 to 9 of the SDRmn register (0000001B to 1111111B) and therefore is 1 to 127.

Remark 2. m: Unit number (m = 0, 1), n: Channel number (n = 0 to 3), mn = 00 to 03, 10, 11

The operation clock (f_{MCK}) is determined by serial clock select register m (SPSm) and bit 15 (CKSmn) of serial mode register mn (SMRmn).

Table 19 - 9 Selection of Operation Clock For Simplified I²C

SMRmn Register	SPSm Register								Operation Clock (f_{MCK})Note	
CKSmn	PRS m13	PRS m12	PRS m11	PRS m10	PRS m03	PRS m02	PRS m01	PRS m00		f_{CLK} = 32 MHz
0	×	×	×	×	0	0	0	0	f_{CLK}	32 MHz
	×	×	×	×	0	0	0	1	$f_{CLK}/2$	16 MHz
	×	×	×	×	0	0	1	0	$f_{CLK}/2^2$	8 MHz
	×	×	×	×	0	0	1	1	$f_{CLK}/2^3$	4 MHz
	×	×	×	×	0	1	0	0	$f_{CLK}/2^4$	2 MHz
	×	×	×	×	0	1	0	1	$f_{CLK}/2^5$	1 MHz
	×	×	×	×	0	1	1	0	$f_{CLK}/2^6$	500 kHz
	×	×	×	×	0	1	1	1	$f_{CLK}/2^7$	250 kHz
	×	×	×	×	1	0	0	0	$f_{CLK}/2^8$	125 kHz
	×	×	×	×	1	0	0	1	$f_{CLK}/2^9$	62.5 kHz
	×	×	×	×	1	0	1	0	$f_{CLK}/2^{10}$	31.25 kHz
	×	×	×	×	1	0	1	1	$f_{CLK}/2^{11}$	15.63 kHz
1	0	0	0	0	×	×	×	×	f_{CLK}	32 MHz
	0	0	0	1	×	×	×	×	$f_{CLK}/2$	16 MHz
	0	0	1	0	×	×	×	×	$f_{CLK}/2^2$	8 MHz
	0	0	1	1	×	×	×	×	$f_{CLK}/2^3$	4 MHz
	0	1	0	0	×	×	×	×	$f_{CLK}/2^4$	2 MHz
	0	1	0	1	×	×	×	×	$f_{CLK}/2^5$	1 MHz
	0	1	1	0	×	×	×	×	$f_{CLK}/2^6$	500 kHz
	0	1	1	1	×	×	×	×	$f_{CLK}/2^7$	250 kHz
	1	0	0	0	×	×	×	×	$f_{CLK}/2^8$	125 kHz
	1	0	0	1	×	×	×	×	$f_{CLK}/2^9$	62.5 kHz
	1	0	1	0	×	×	×	×	$f_{CLK}/2^{10}$	31.25 kHz
	1	0	1	1	×	×	×	×	$f_{CLK}/2^{11}$	15.63 kHz
Other than above									Setting prohibited	

Note When changing the clock selected for f_{CLK} (by changing the system clock control register (CKC) value), do so after having stopped (serial channel stop register m (STm) = 000FH) the operation of the serial array unit (SAU).

Remark 1. ×: Don't care

Remark 2. m: Unit number (m = 0, 1), n: Channel number (n = 0 to 3), mn = 00 to 03, 10, 11

Here is an example of setting an I²C transfer rate where f_{MCK} = f_{CLK} = 32 MHz.

I²C Transfer Mode (Desired Transfer Rate)	f_{CLK} = 32 MHz			
	Operation Clock (f_{MCK})	SDRmn[15:9]	Calculated Transfer Rate	Error from Desired Transfer Rate
100 kHz	f_{CLK}/2	79	100 kHz	0.0%
400 kHz	f_{CLK}	41	380 kHz	5.0%Note
1 MHz	f_{CLK}	18	0.84 MHz	16.0%Note

Note The error cannot be set to about 0% because the duty ratio of the SCL signal is 50%.

19.9.6 Procedure for processing errors that occurred during simplified I²C (IIC00, IIC01, IIC10, IIC11, IIC20, IIC21) communication

The procedure for processing errors that occurred during simplified I²C (IIC00, IIC01, IIC10, IIC11, IIC20, IIC21) communication is described in **Figures 19 - 148** and **19 - 149**.

Figure 19 - 148 Processing Procedure in Case of Overrun Error

Software Manipulation	Hardware Status	Remark
Reads serial data register mn (SDRmn). →	The BFFmn bit of the SSRmn register is set to 0 and channel n is enabled to receive data.	This is to prevent an overrun error if the next reception is completed during error processing.
Reads serial status register mn (SSRmn).		The error type is identified and the read value is used to clear the error flag.
Writes 1 to serial flag clear trigger register mn (SIRmn). →	The error flag is cleared.	The error only during reading can be cleared, by writing the value read from the SSRmn register to the SIRmn register without modification.

Figure 19 - 149 Processing Procedure in Case of ACK Error in Simplified I²C Mode

Software Manipulation	Hardware Status	Remark
Reads serial status register mn (SSRmn).		Error type is identified and the read value is used to clear error flag.
Writes serial flag clear trigger register mn (SIRmn). →	Error flag is cleared.	Error can be cleared only during reading, by writing the value read from the SSRmn register to the SIRmn register without modification.
Sets the STmn bit of serial channel stop register m (STm) to 1. →	The SEmn bit of serial channel enable status register m (SEm) is set to 0 and channel n stops operation.	Slave is not ready for reception because ACK is not returned. Therefore, a stop condition is created, the bus is released, and communication is started again from the start condition. Or, a restart condition is generated and transmission can be redone from address transmission.
Creates stop condition.		
Creates start condition.		
Sets the SSmn bit of serial channel start register m (SSm) to 1. →	The SEmn bit of serial channel enable status register m (SEm) is set to 1 and channel n is enabled to operate.	

Remark m: Unit number (m = 0, 1), n: Channel number (n = 0 to 3), r: IIC number (r = 00, 01, 10, 11, 20, 21)
mn = 00 to 03, 10, 11

CHAPTER 20 SERIAL INTERFACE IICA

One channel of the serial Interface IICA is provided.

Caution 1. The assignment of input and output pins of IICAn depends on the product. For details, refer to CHAPTER 2 PIN FUNCTIONS.

Caution 2. Most of the following descriptions in this chapter use the 64-pin products as an example.

20.1 Functions of Serial Interface IICA

Serial interface IICA has the following three modes.

(1) Operation stop mode

This mode is used when serial transfers are not performed. It can therefore be used to reduce power consumption.

(2) I^2C bus mode (multimaster supported)

This mode is used for 8-bit data transfers with several devices via two lines: a serial clock (SCLAn) line and a serial data bus (SDAAn) line.

This mode complies with the I^2C bus format and the master device can generated “start condition”, “address”, “transfer direction specification”, “data”, and “stop condition” data to the slave device, via the serial data bus. The slave device automatically detects these received status and data by hardware. This function can simplify the part of application program that controls the I^2C bus.

Since the SCLAn and SDAAn pins are used for open drain outputs, serial interface IICA requires pull-up resistors for the serial clock line and the serial data bus line.

(3) Wakeup mode

The STOP mode can be released by generating an interrupt request signal (INTIICAn) when an extension code from the master device or a local address has been received while in STOP mode. This can be set by using the WUPn bit of IICA control register n1 (IICCTLn1).

Figure 20 - 1 shows a block diagram of serial interface IICA

Remark n = 0

Figure 20 - 1 Block Diagram of Serial Interface IICA

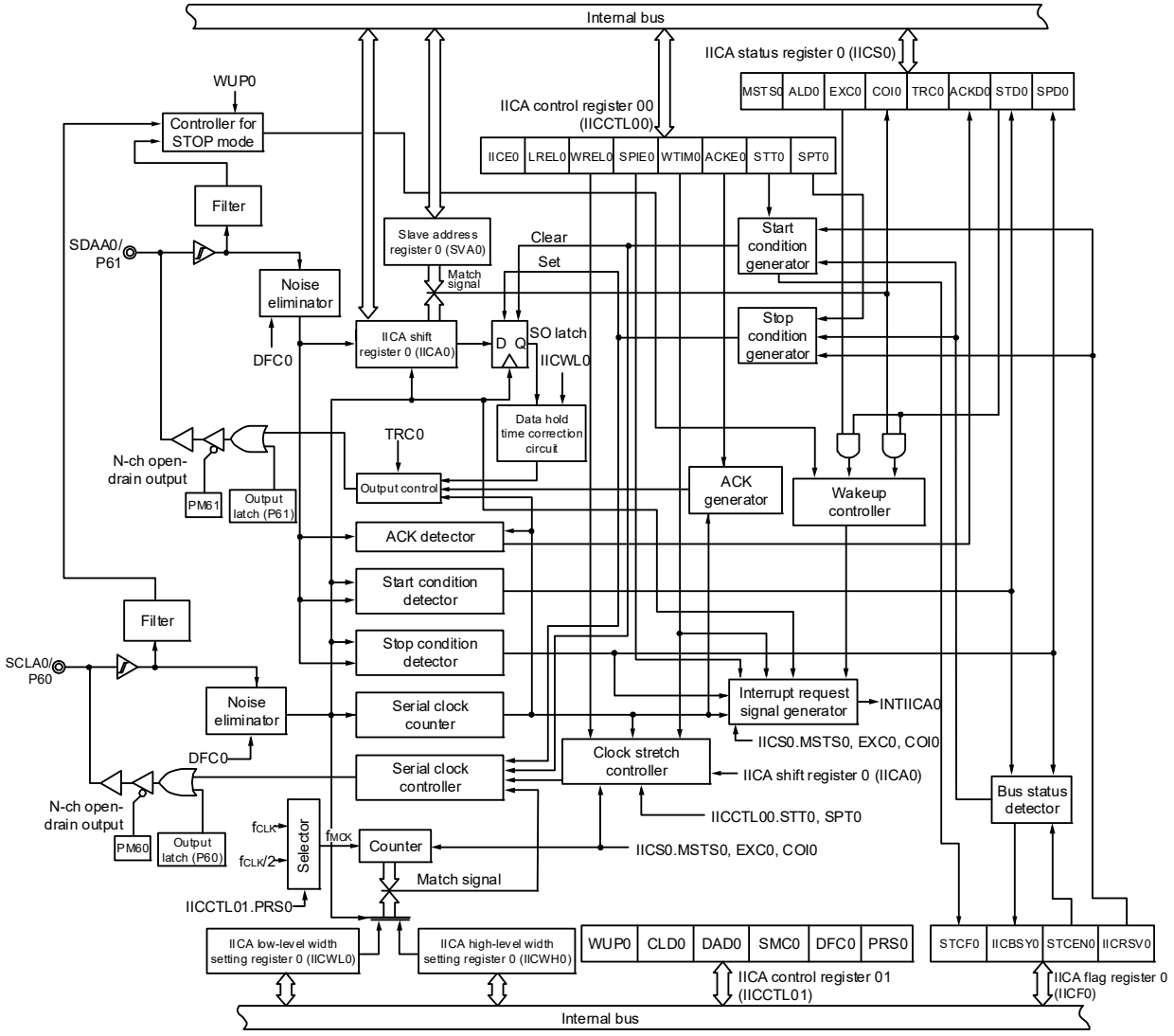

Figure 20 - 2 shows a serial bus configuration example.

Figure 20 - 2 Serial Bus Configuration Example Using I²C Bus

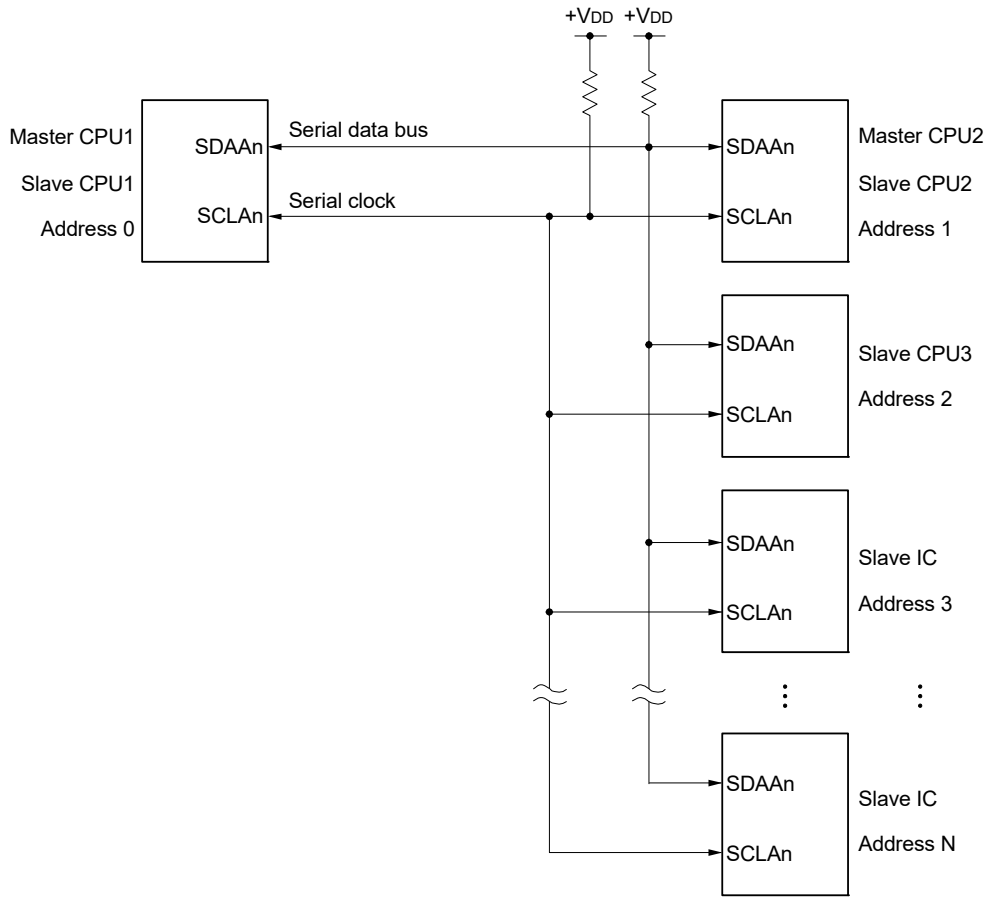

Remark n = 0

20.2 Configuration of Serial Interface IICA

Serial interface IICA includes the following hardware.

Table 20 - 1 Configuration of Serial Interface IICA

Item	Configuration
Registers	IICA shift register n (IICAn) Slave address register n (SVAn)
Control registers	Peripheral enable register 0 (PER0) IICA control register n0 (IICCTLn0) IICA status register n (IICSn) IICA flag register n (IICFn) IICA control register n1 (IICCTLn1) IICA low-level width setting register n (IICWLn) IICA high-level width setting register n (IICWHn) Port mode registers 1, 6 (PM1, PM6)Note Port registers 1, 6 (P1, P6)Note

Note 64-pin products only. For details on other products, refer to **4.3 Registers Controlling Port Function**.
The pins to be used depend on the products. Set the PIOR02 bit of the PIOR0 register as follows.

Product	Function	PIOR02 Setting	
		0	1
24-pin products	SCLA0	P01	P14
	SDAA0	P00	P15
32-pin products	SCLA0	P31	P14
	SDAA0	P74	P15
36-, 48-, and 64-pin products	SCLA0	P60	P14
	SDAA0	P61	P15

For details on the setting of the PIOR02 bit, see **4.3.7 Peripheral I/O redirection register 0 (PIOR0)**.

Remark n = 0

(1) IICA shift register n (IICAn)

The IICAn register is used to convert 8-bit serial data to 8-bit parallel data and vice versa in synchronization with the serial clock. The IICAn register can be used for both transmission and reception.

The actual transmit and receive operations can be controlled by writing and reading operations to the IICAn register.

Cancel the clock stretch state and start data transfer by writing data to the IICAn register during the clock stretch period.

The IICAn register can be set by an 8-bit memory manipulation instruction.

Reset signal generation clears IICAn to 00H.

Figure 20 - 3 Format of IICA shift register n (IICAn)

Address: FFF50H After reset: 00H R/W

Symbol	7	6	5	4	3	2	1	0
IICAn								

Caution 1. Do not write data to the IICAn register during data transfer.

Caution 2. Write or read the IICAn register only during the clock stretch period. Accessing the IICAn register in a communication state other than during the clock stretch period is prohibited. When the device serves as the master, however, the IICAn register can be written only once after the communication trigger bit (STTn) is set to 1.

Caution 3. When communication is reserved, write data to the IICAn register after the interrupt triggered by a stop condition is detected.

(2) Slave address register n (SVAn)

This register stores seven bits of local addresses {A6, A5, A4, A3, A2, A1, A0} when in slave mode.

The SVAn register can be set by an 8-bit memory manipulation instruction.

However, rewriting to this register is prohibited while STDn = 1 (while the start condition is detected).

Reset signal generation clears the SVAn register to 00H.

Figure 20 - 4 Format of Slave address register n (SVAn)

Address: F0234H After reset: 00H R/W

Symbol	7	6	5	4	3	2	1	0
SVAn	A6	A5	A4	A3	A2	A1	A0	0Note

Note Bit 0 is fixed to 0.

(3) SO latch

The SO latch is used to retain the SDAAn pin's output level.

(4) Wakeup controller

This circuit generates an interrupt request (INTIICAn) when the address received by this register matches the address value set to the slave address register n (SVAn) or when an extension code is received.

Remark n = 0

(5) Serial clock counter

This counter counts the serial clocks that are output or input during transmit/receive operations and is used to verify that 8-bit data was transmitted or received.

(6) Interrupt request signal generator

This circuit controls the generation of interrupt request signals (INTIICAn).

An I^2C interrupt request is generated by the following two triggers.

- Falling edge of eighth or ninth clock of the serial clock (set by the WTIMn bit)
- Interrupt request generated when a stop condition is detected (set by the SPIEn bit)

Remark WTIMn bit: Bit 3 of IICA control register n0 (IICCTLn0)
SPIEn bit: Bit 4 of IICA control register n0 (IICCTLn0)

(7) Serial clock controller

In master mode, this circuit generates the clock output via the SCLAn pin from a sampling clock.

(8) Clock stretch controller

This circuit controls the timing of clock stretching.

(9) ACK generator, stop condition detector, start condition detector, and ACK detector

These circuits generate and detect each status.

(10) Data hold time correction circuit

This circuit generates the hold time for data corresponding to the falling edge of the serial clock.

(11) Start condition generator

This circuit generates a start condition when the STTn bit is set to 1.

However, in the communication reservation disabled status (IICRSVn bit = 1), when the bus is not released (IICBSYn bit = 1), start condition requests are ignored and the STCFn bit is set to 1.

(12) Stop condition generator

This circuit generates a stop condition when the SPTn bit is set to 1.

(13) Bus status detector

This circuit detects whether or not the bus is released by detecting start conditions and stop conditions.

However, as the bus status cannot be detected immediately following operation, the initial status is set by the STCENn bit.

Remark 1. STTn bit: Bit 1 of IICA control register n0 (IICCTLn0)
SPTn bit: Bit 0 of IICA control register n0 (IICCTLn0)
IICRSVn bit: Bit 0 of IICA flag register n (IICFn)
IICBSYn bit: Bit 6 of IICA flag register n (IICFn)
STCFn bit: Bit 7 of IICA flag register n (IICFn)
STCENn bit: Bit 1 of IICA flag register n (IICFn)

Remark 2. n = 0

20.3 Registers Controlling Serial Interface IICA

Serial interface IICA is controlled by the following eight registers.

- Peripheral enable register 0 (PER0)
- IICA control register n0 (IICCTLn0)
- IICA flag register n (IICFn)
- IICA status register n (IICSn)
- IICA control register n1 (IICCTLn1)
- IICA low-level width setting register n (IICWLn)
- IICA high-level width setting register n (IICWHn)
- Port mode registers 1, 6 (PM1, PM6)
- Port registers 1, 6 (P1, P6)

Remark n = 0

20.3.1 Peripheral enable register 0 (PER0)

This register is used to enable or disable supplying the clock to the peripheral hardware. Clock supply to a hardware macro that is not used is stopped in order to reduce the power consumption and noise.
When serial interface IICAn is used, be sure to set bit 4 (IICA0EN) of this register to 1.
The PER0 register can be set by a 1-bit or 8-bit memory manipulation instruction.
Reset signal generation clears this register to 00H.

Figure 20 - 5 Format of Peripheral enable register 0 (PER0)

Address: F00F0H After reset: 00H R/W

Symbol	7	6	5	4	3	2	1	0
PER0	RTCEN	IRDAEN	ADCEN	IICA0EN	SAU1EN	SAU0EN	0	TAU0EN

IICAnEN	Control of serial interface IICAn input clock supply
0	Stops input clock supply. • SFR used by serial interface IICAn cannot be written. • Serial interface IICAn is in the reset status.
1	Enables input clock supply. • SFR used by serial interface IICAn can be read/written.

Caution 1. When setting serial interface IICA, be sure to set the following registers first while the IICAnEN bit is set to 1. If IICAnEN = 0, the control registers of serial interface IICA are set to their initial values, and writing to them is ignored (except for port mode register 6 (PM6) and port register 6 (P6)).
- **IICA control register n0 (IICCTLn0)**
- **IICA flag register n (IICFn)**
- **IICA status register n (IICSn)**
- **IICA control register n1 (IICCTLn1)**
- **IICA low-level width setting register n (IICWLn)**
- **IICA high-level width setting register n (IICWHn)**

Caution 2. Be sure to bit 1 to “0”.

Remark n = 0

20.3.2 IICA control register n0 (IICCTLn0)

This register is used to enable/stop I^{2}C operations, set clock stretch timing, and set other I^{2}C operations.
The IICCTLn0 register can be set by a 1-bit or 8-bit memory manipulation instruction. However, set the SPIEn, WTIMn, and ACKEn bits while IICEn = 0 or during the clock stretch period. These bits can be set at the same time when the IICEn bit is set from “0” to “1”.
Reset signal generation clears this register to 00H.

Remark n = 0

Figure 20 - 6 Format of IICA control register n0 (IICCTLn0) (1/4)

Address: F0230H After reset: 00H R/W

Symbol	7	6	5	4	3	2	1	0
IICCTLn0	IICEn	LRELn	WRELn	SPIEn	WTIMn	ACKEn	STTn	SPTn

IICEn	I^2C operation enable
0	Stop operation. Reset the IICA status register n (IICSn)[Note 1]. Stop internal operation.
1	Enable operation.
Be sure to set this bit (1) while the SCLAn and SDAAn lines are at high level.	
Condition for clearing (IICEn = 0)	Condition for setting (IICEn = 1)
• Cleared by instruction • Reset	• Set by instruction

LRELn Notes 2, 3	Exit from communications
0	Normal operation
1	This exits from the current communications and sets standby mode. This setting is automatically cleared to 0 after being executed. Its uses include cases in which a locally irrelevant extension code has been received. The SCLAn and SDAAn lines are set to high impedance. The following flags of IICA control register n0 (IICCTLn0) and the IICA status register n (IICSn) are cleared to 0. • STTn • SPTn • MSTSn • EXCn • COIn • TRCn • ACKDn • STDn
The standby mode following exit from communications remains in effect until the following communications entry conditions are met. • After a stop condition is detected, restart is in master mode. • An address match or extension code reception occurs after the start condition.	
Condition for clearing (LRELn = 0)	Condition for setting (LRELn = 1)
• Automatically cleared after execution • Reset	• Set by instruction

WRELn Notes 2, 3	Clock stretch cancellation
0	Do not cancel clock stretch
1	Cancel clock stretch. This setting is automatically cleared after clock stretch is canceled.
When the WRELn bit is set (clock stretch canceled) during the clock stretch period at the ninth clock pulse in the transmission status (TRCn = 1), the SDAAn line goes into the high impedance state (TRCn = 0).	
Condition for clearing (WRELn = 0)	Condition for setting (WRELn = 1)
• Automatically cleared after execution • Reset	• Set by instruction

Note 1. The IICA shift register n (IICAn), the STCFn and IICBSYn bits of the IICA flag register n (IICFn), and the CLDn and DADn bits of IICA control register n1 (IICCTLn1) are reset.

Note 2. The signal of this bit is invalid while IICEn is 0.

Note 3. When the LRELn and WRELn bits are read, 0 is always read.

Caution **If the operation of I^2C is enabled (IICEn = 1) when the SCLAn line is high level, the SDAAn line is low level, and the digital filter is turned on (DFCn bit of IICCTLn1 register = 1), a start condition will be inadvertently detected immediately. In this case, set (1) the LRELn bit by using a 1-bit memory manipulation instruction immediately after enabling operation of I^2C (IICEn = 1).**

Remark n = 0

Figure 20 - 7 Format of IICA control register n0 (IICCTLn0) (2/4)

SPIEn Note 1	Enable/disable generation of interrupt request when stop condition is detected
0	Disable
1	Enable
If the WUPn bit of IICA control register n1 (IICCTLn1) is 1, no stop condition interrupt will be generated even if SPIEn = 1.	
Condition for clearing (SPIEn = 0)	Condition for setting (SPIEn = 1)
• Cleared by instruction • Reset	• Set by instruction

WTIMn Note 1	Control of clock stretch and interrupt request generation
0	Interrupt request is generated at the eighth clock's falling edge. Master mode: After output of eight clocks, clock output is set to low level and clock stretch is set. Slave mode: After input of eight clocks, the clock is set to low level and clock stretch is set for master device.
1	Interrupt request is generated at the ninth clock's falling edge. Master mode: After output of nine clocks, clock output is set to low level and clock stretch is set. Slave mode: After input of nine clocks, the clock is set to low level and clock stretch is set for master device.
An interrupt is generated at the falling edge of the ninth clock during address transfer independently of the setting of this bit. The setting of this bit is valid when the address transfer is completed. When in master mode, a clock stretch is inserted at the falling edge of the ninth clock during address transfers. For a slave device that has received a local address, a clock stretch is inserted at the falling edge of the ninth clock after an acknowledge (ACK) is issued. However, when the slave device has received an extension code, a clock stretch is inserted at the falling edge of the eighth clock.	
Condition for clearing (WTIMn = 0)	Condition for setting (WTIMn = 1)
• Cleared by instruction • Reset	• Set by instruction

ACKEn Notes 1, 2	Acknowledgment control
0	Disable acknowledgment.
1	Enable acknowledgment. During the ninth clock period, the SDAAn line is set to low level.
Condition for clearing (ACKEn = 0)	Condition for setting (ACKEn = 1)
• Cleared by instruction • Reset	• Set by instruction

Note 1. The signal of this bit is invalid while IICEn is 0. Set this bit during that period.

Note 2. The set value is invalid during address transfer and if the code is not an extension code.
When the device serves as a slave and the addresses match, an acknowledgment is generated regardless of the set value.

Remark n = 0

Figure 20 - 8 Format of IICA control register n0 (IICCTLn0) (3/4)

STTn Notes 1, 2	Start condition trigger
0	Do not generate a start condition.
1	When bus is released (in standby state, when IICBSYn = 0): If this bit is set (1), a start condition is generated (startup as the master). When a third party is communicating: • When communication reservation function is enabled (IICRSVn = 0) Functions as the start condition reservation flag. When set to 1, automatically generates a start condition after the bus is released. • When communication reservation function is disabled (IICRSVn = 1) Even if this bit is set (1), the STTn bit is cleared and the STTn clear flag (STCFn) is set (1). No start condition is generated. In the clock stretch state (when master device): Generates a restart condition after releasing the clock stretch.

Cautions concerning set timing
- For master reception: Cannot be set to 1 during transfer. Can be set to 1 only in the clock stretch period when the ACKEn bit has been cleared to 0 and slave has been notified of final reception.
- For master transmission: A start condition cannot be generated normally during the acknowledge period. Set to 1 during the clock stretch period that follows output of the ninth clock.
- Cannot be set to 1 at the same time as stop condition trigger (SPTn).
- Once STTn is set (1), setting it again (1) before the clear condition is met is not allowed.

Condition for clearing (STTn = 0)	Condition for setting (STTn = 1)
• Cleared by setting the STTn bit to 1 while communication reservation is prohibited. • Cleared by loss in arbitration • Cleared after start condition is generated by master device • Cleared by LRELn = 1 (exit from communications) • When IICEn = 0 (operation stop) • Reset	• Set by instruction

Note 1. The signal of this bit is invalid while IICEn is 0.
Note 2. The STTn bit is always read as 0.

Remark 1. Bit 1 (STTn) becomes 0 when it is read after data setting.
Remark 2. IICRSVn: Bit 0 of IICA flag register n (IICFn)
STCFn: Bit 7 of IICA flag register n (IICFn)
Remark 3. n = 0

Figure 20 - 9 Format of IICA control register n0 (IICCTLn0) (4/4)

SPTn[Note]	Stop condition trigger
0	Stop condition is not generated.
1	Stop condition is generated (termination of master device's transfer).

Cautions concerning set timing

- For master reception: Cannot be set to 1 during transfer.
  Can be set to 1 only in the clock stretch period when the ACKEn bit has been cleared to 0 and slave has been notified of final reception.
- For master transmission: A stop condition cannot be generated normally during the acknowledge period. Therefore, set it during the clock stretch period that follows output of the ninth clock.
- Cannot be set to 1 at the same time as start condition trigger (STTn).
- The SPTn bit can be set to 1 only when in master mode.
- When the WTIMn bit has been cleared to 0, if the SPTn bit is set to 1 during the clock stretch period that follows output of eight clocks, note that a stop condition will be generated during the high-level period of the ninth clock. The WTIMn bit should be changed from 0 to 1 during the clock stretch period following the output of eight clocks, and the SPTn bit should be set to 1 during the clock stretch period that follows the output of the ninth clock.
- Once SPTn is set (1), setting it again (1) before the clear condition is met is not allowed.

Condition for clearing (SPTn = 0)	Condition for setting (SPTn = 1)
• Cleared by loss in arbitration • Automatically cleared after stop condition is detected • Cleared by LRELn = 1 (exit from communications) • When IICEn = 0 (operation stop) • Reset	• Set by instruction

Note When the SPTn register is read, 0 is always read.

Caution **When bit 3 (TRCn) of the IICA status register n (IICSn) is set to 1 (transmission status), bit 5 (WRELn) of IICA control register n0 (IICCTLn0) is set to 1 during the ninth clock and clock stretch is canceled, after which the TRCn bit is cleared (reception status) and the SDAAn line is set to high impedance. Release the clock stretch performed while the TRCn bit is 1 (transmission status) by writing to the IICA shift register n.**

Remark n = 0

20.3.3 IICA status register n (IICSn)

This register indicates the status of I²C.

The IICSn register is read by a 1-bit or 8-bit memory manipulation instruction only when STTn = 1 and during the clock stretch period.

Reset signal generation clears this register to 00H.

Caution **Reading the IICSn register while the address match wakeup function is enabled (WUPn = 1) in STOP mode is prohibited. When the WUPn bit is changed from 1 to 0 (wakeup operation is stopped), regardless of the INTIICAn interrupt request, the change in status is not reflected until the next start condition or stop condition is detected. To use the wakeup function, therefore, enable (SPIEn = 1) the interrupt generated by detecting a stop condition and read the IICSn register after the interrupt has been detected.**

Remark STTn: bit 1 of IICA control register n0 (IICCTLn0)
WUPn: bit 7 of IICA control register n1 (IICCTLn1)

Figure 20 - 10 Format of IICA status register n (IICSn) (1/3)

Address: FFF51H After reset: 00H R

Symbol	7	6	5	4	3	2	1	0
IICSn	MSTSn	ALDn	EXCn	COIn	TRCn	ACKDn	STDn	SPDn

MSTSn	Master status check flag
0	Slave device status or communication standby status
1	Master device communication status

Condition for clearing (MSTSn = 0)	Condition for setting (MSTSn = 1)
• When a stop condition is detected • When ALDn = 1 (arbitration loss) • Cleared by LRELn = 1 (exit from communications) • When the IICEn bit changes from 1 to 0 (operation stop) • Reset	• When a start condition is generated

ALDn	Detection of arbitration loss
0	This status means either that there was no arbitration or that the arbitration result was a “win”.
1	This status indicates the arbitration result was a “loss”. The MSTSn bit is cleared.

Condition for clearing (ALDn = 0)	Condition for setting (ALDn = 1)
• Automatically cleared after the IICSn register is read[Note] • When the IICEn bit changes from 1 to 0 (operation stop) • Reset	• When the arbitration result is a “loss”.

Note This register is also cleared when a 1-bit memory manipulation instruction is executed for bits other than the IICSn register. Therefore, when using the ALDn bit, read the data of this bit before the data of the other bits.

Remark 1. LRELn: Bit 6 of IICA control register n0 (IICCTLn0)
IICEn: Bit 7 of IICA control register n0 (IICCTLn0)

Remark 2. n = 0

Figure 20 - 11 Format of IICA status register n (IICSn) (2/3)

EXCn	Detection of extension code reception
0	Extension code was not received.
1	Extension code was received.

Condition for clearing (EXCn = 0)	Condition for setting (EXCn = 1)
• When a start condition is detected • When a stop condition is detected • Cleared by LRELn = 1 (exit from communications) • When the IICEn bit changes from 1 to 0 (operation stop) • Reset	• When the higher four bits of the received address data is either “0000” or “1111” (set at the rising edge of the eighth clock).

COIn	Detection of matching addresses
0	Addresses do not match.
1	Addresses match.

Condition for clearing (COIn = 0)	Condition for setting (COIn = 1)
• When a start condition is detected • When a stop condition is detected • Cleared by LRELn = 1 (exit from communications) • When the IICEn bit changes from 1 to 0 (operation stop) • Reset	• When the received address matches the local address (slave address register n (SVAn)) (set at the rising edge of the eighth clock).

TRCn	Detection of transmit/receive status
0	Receive status (other than transmit status). The SDAAn line is set for high impedance.
1	Transmit status. The value in the SOn latch is enabled for output to the SDAAn line (valid starting at the falling edge of the first byte’s ninth clock).

Condition for clearing (TRCn = 0)	Condition for setting (TRCn = 1)
<Both master and slave> • When a stop condition is detected • Cleared by LRELn = 1 (exit from communications) • When the IICEn bit changes from 1 to 0 (operation stop) • Cleared by WRELn = 1 Note (clock stretch cancel) • When the ALDn bit changes from 0 to 1 (arbitration loss) • Reset • When not used for communication (MSTSn, EXCn, COIn = 0) <Master> • When “1” is output to the first byte’s LSB (transfer direction specification bit) <Slave> • When a start condition is detected • When “0” is input to the first byte’s LSB (transfer direction specification bit)	<Master> • When a start condition is generated • When 0 (master transmission) is output to the LSB (transfer direction specification bit) of the first byte (during address transfer) <Slave> • When 1 (slave transmission) is input to the LSB (transfer direction specification bit) of the first byte from the master (during address transfer)

Note When bit 3 (TRCn) of the IICA status register n (IICSn) is set to 1 (transmission status), bit 5 (WRELn) of IICA control register n0 (IICCTLn0) is set to 1 during the ninth clock and clock stretch is canceled, after which the TRCn bit is cleared (reception status) and the SDAAn line is set to high impedance. Release the clock stretch performed while the TRCn bit is 1 (transmission status) by writing to the IICA shift register n.

Remark 1. LRELn: Bit 6 of IICA control register n0 (IICCTLn0)
IICEn: Bit 7 of IICA control register n0 (IICCTLn0)

Remark 2. n = 0

Figure 20 - 12 Format of IICA status register n (IICSn) (3/3)

ACKDn	Detection of acknowledge (ACK)
0	Acknowledge was not detected.
1	Acknowledge was detected.

Condition for clearing (ACKDn = 0)	Condition for setting (ACKDn = 1)
• When a stop condition is detected • At the rising edge of the next byte's first clock • Cleared by LRELn = 1 (exit from communications) • When the IICEn bit changes from 1 to 0 (operation stop) • Reset	• After the SDAAn line is set to low level at the rising edge of SCLAn line's ninth clock

STDn	Detection of start condition
0	Start condition was not detected.
1	Start condition was detected. This indicates that the address transfer period is in effect.

Condition for clearing (STDn = 0)	Condition for setting (STDn = 1)
• When a stop condition is detected • At the rising edge of the next byte's first clock following address transfer • Cleared by LRELn = 1 (exit from communications) • When the IICEn bit changes from 1 to 0 (operation stop) • Reset	• When a start condition is detected

SPDn	Detection of stop condition
0	Stop condition was not detected.
1	Stop condition was detected. The master device's communication is terminated and the bus is released.

Condition for clearing (SPDn = 0)	Condition for setting (SPDn = 1)
• At the rising edge of the address transfer byte's first clock following setting of this bit and detection of a start condition • When the WUPn bit changes from 1 to 0 • When the IICEn bit changes from 1 to 0 (operation stop) • Reset	• When a stop condition is detected

Remark 1. LRELn: Bit 6 of IICA control register n0 (IICCTLn0)
IICEn: Bit 7 of IICA control register n0 (IICCTLn0)

Remark 2. n = 0

20.3.4 IICA flag register n (IICFn)

This register sets the operation mode of I^{2}C and indicates the status of the I^{2}C bus.

The IICFn register can be set by a 1-bit or 8-bit memory manipulation instruction. However, the STTn clear flag (STCFn) and I^{2}C bus status flag (IICBSYn) bits are read-only.

The IICRSVn bit can be used to enable/disable the communication reservation function.

The STCENn bit can be used to set the initial value of the IICBSYn bit.

The IICRSVn and STCENn bits can be written only when the operation of I^{2}C is disabled (bit 7 (IICEn) of IICA control register n0 (IICCTLn0) = 0). When operation is enabled, the IICFn register can be read.

Reset signal generation clears this register to 00H.

Figure 20 - 13 Format of IICA flag register n (IICFn)

Address: FFF52H After reset: 00H R/W[Note]

Symbol	6	3	5	4	3	2	1	0
IICFn	STCFn	IICBSYn	0	0	0	0	STCENn	IICRSVn

STCFn	STTn clear flag
0	Generate start condition
1	Start condition generation unsuccessful: clear the STTn flag

Condition for clearing (STCFn = 0)	Condition for setting (STCFn = 1)
• Cleared by STTn = 1 • When IICEn = 0 (operation stop) • Reset	• Generating start condition unsuccessful and the STTn bit cleared to 0 when communication reservation is disabled (IICRSVn = 1).

IICBSYn	I^2C bus status flag
0	Bus release status (communication initial status when STCENn = 1)
1	Bus communication status (communication initial status when STCENn = 0)

Condition for clearing (IICBSYn = 0)	Condition for setting (IICBSYn = 1)
• Detection of stop condition • When IICEn = 0 (operation stop) • Reset	• Detection of start condition • Setting of the IICEn bit when STCENn = 0

STCENn	Initial start enable trigger
0	After operation is enabled (IICEn = 1), enable generation of a start condition upon detection of a stop condition.
1	After operation is enabled (IICEn = 1), enable generation of a start condition without detecting a stop condition.

Condition for clearing (STCENn = 0)	Condition for setting (STCENn = 1)
• Cleared by instruction • Detection of start condition • Reset	• Set by instruction

IICRSVn	Communication reservation function disable bit
0	Enable communication reservation
1	Disable communication reservation

Condition for clearing (IICRSVn = 0)	Condition for setting (IICRSVn = 1)
• Cleared by instruction • Reset	• Set by instruction

Note Bits 6 and 7 are read-only.

Caution 1. Write to the STCENn bit only when the operation is stopped (IICEn = 0).

Caution 2. As the bus release status (IICBSYn = 0) is recognized regardless of the actual bus status when STCENn = 1, when generating the first start condition (STTn = 1), it is necessary to verify that no third party communications are in progress in order to prevent such communications from being destroyed.

Caution 3. Write to IICRSVn only when the operation is stopped (IICEn = 0).

Remark 1. STTn: Bit 1 of IICA control register n0 (IICCTLn0)

Remark 2. IICEn: Bit 7 of IICA control register n0 (IICCTLn0)

Remark 3. n = 0

20.3.5 IICA control register n1 (IICCTLn1)

This register is used to set the operation mode of I²C and detect the statuses of the SCLAn and SDAAn pins.

The IICCTLn1 register can be set by a 1-bit or 8-bit memory manipulation instruction. However, the CLDn and DADn bits are read-only.

Set the IICCTLn1 register, except the WUPn bit, while operation of I²C is disabled (bit 7 (IICEn) of IICA control register n0 (IICCTLn0) is 0).

Reset signal generation clears this register to 00H.

Figure 20 - 14 Format of IICA control register n1 (IICCTLn1) (1/2)

Address: F0231H After reset: 00H R/W[Note 1]

Symbol	7	6	5	4	3	2	1	0
IICCTLn1	WUPn	0	CLDn	DADn	SMCn	DFCn	0	PRSn

WUPn	Control of address match wakeup
0	Stops operation of address match wakeup function in STOP mode.
1	Enables operation of address match wakeup function in STOP mode.

To shift to STOP mode when WUPn = 1, execute the STOP instruction at least three f_{MCK} clocks after setting (1) the WUPn bit (see **Figure 20 - 29 Flow When Setting WUPn = 1**).
Clear (0) the WUPn bit after the address has matched or an extension code has been received. The subsequent communication can be entered by the clearing (0) WUPn bit. (The clock stretch must be released and transmit data must be written after the WUPn bit has been cleared (0).)
The interrupt timing when the address has matched or when an extension code has been received, while WUPn = 1, is identical to the interrupt timing when WUPn = 0. (A delay of the difference of sampling by the clock will occur.)
Furthermore, when WUPn = 1, a stop condition interrupt is not generated even if the SPIEn bit is set to 1.

Condition for clearing (WUPn = 0)	Condition for setting (WUPn = 1)
• Cleared by instruction (after address match or extension code reception)	• Set by instruction (when the MSTSn, EXCn, and COIn bits are “0”, and the STDn bit also “0” (communication not entered))[Note 2]

Note 1. Bits 4 and 5 are read-only.

Note 2. The status of the IICA status register n (IICSn) must be checked and the WUPn bit must be set during the period shown below.

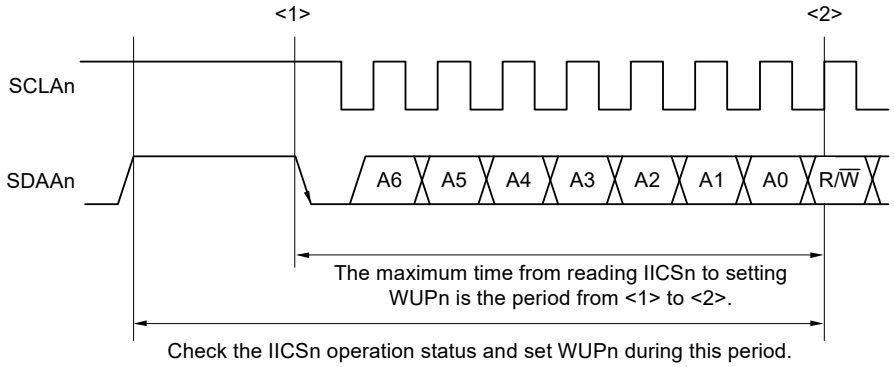

Remark n = 0

Figure 20 - 15 Format of IICA control register n1 (IICCTLn1) (2/2)

CLDn	Detection of SCLAn pin level (valid only when IICEn = 1)
0	The SCLAn pin was detected at low level.
1	The SCLAn pin was detected at high level.

Condition for clearing (CLDn = 0)	Condition for setting (CLDn = 1)
• When the SCLAn pin is at low level • When IICEn = 0 (operation stop) • Reset	• When the SCLAn pin is at high level

DADn	Detection of SDAAn pin level (valid only when IICEn = 1)
0	The SDAAn pin was detected at low level.
1	The SDAAn pin was detected at high level.

Condition for clearing (DADn = 0)	Condition for setting (DADn = 1)
• When the SDAAn pin is at low level • When IICEn = 0 (operation stop) • Reset	• When the SDAAn pin is at high level

SMCn	Operation mode switching
0	Operates in standard mode (fastest transfer rate: 100 kbps).
1	Operates in fast mode (fastest transfer rate: 400 kbps) or fast mode plus (fastest transfer rate: 1 Mbps).

DFCn	Digital filter operation control
0	Digital filter off.
1	Digital filter on.
Use the digital filter only in fast mode and fast mode plus. The digital filter is used for noise elimination. The transfer clock does not vary, regardless of the DFCn bit being set (1) or cleared (0).	

PRSn	IICA operation clock (f_{MCK}) control
0	Selects f_{CLK} (1 MHz ≤ f_{CLK} ≤ 20 MHz)
1	Selects $f_{CLK}/2$ (20 MHz ≤ f_{CLK})

Caution 1. The maximum operating frequency of the IICA operating clock (f_{MCK}) is 20 MHz (Max.). Only when f_{CLK} exceeds 20 MHz, set bit 0 (PRSn) of IICA control register n1 (IICCTLn1) to 1.

Caution 2. Note the minimum f_{CLK} operating frequency when setting the transfer clock. The minimum f_{CLK} operating frequency for serial interface IICA is determined according to the mode.

Fast mode: f_{CLK} = 3.5 MHz (MIN.)
Fast mode plus: f_{CLK} = 10 MHz (MIN.)
Normal mode: f_{CLK} = 1 MHz (MIN.)

Caution 3. The fast mode plus is only available in the products for "A: Consumer applications (T_A = -40°C to +85°C)" and "D: Industrial applications (T_A = -40°C to +85°C)".

Remark 1. IICEn: Bit 7 of IICA control register n0 (IICCTLn0)
Remark 2. n = 0

20.3.6 IICA low-level width setting register n (IICWLn)

This register is used to set the low-level width (t_{LOW}) of the SCLAn pin signal that is output by serial interface IICA and to control the SDAAn pin signal.

The IICWLn register can be set by an 8-bit memory manipulation instruction.

Set the IICWLn register while operation of I^2C is disabled (bit 7 (IICEn) of IICA control register n0 (IICCTLn0) is 0).

Reset signal generation sets this register to FFH.

For details about setting the IICWLn register, see **20.4.2 Setting transfer clock by using IICWLn and IICWHn registers**.

The data hold time is one-quarter of the time set by the IICWLn register.

Figure 20 - 16 Format of IICA low-level width setting register n (IICWLn)

Address: F0232H After reset: FFH R/W

Symbol	7	6	5	4	3	2	1	0
IICWLn								

20.3.7 IICA high-level width setting register n (IICWHn)

This register is used to set the high-level width of the SCLAn pin signal that is output by serial interface IICA and to control the SDAAn pin signal.

The IICWHn register can be set by an 8-bit memory manipulation instruction.

Set the IICWHn register while operation of I^2C is disabled (bit 7 (IICEn) of IICA control register n0 (IICCTLn0) is 0).

Reset signal generation sets this register to FFH.

Figure 20 - 17 Format of IICA high-level width setting register n (IICWHn)

Address: F0233H After reset: FFH R/W

Symbol	7	6	5	4	3	2	1	0
IICWHn								

Remark 1. For setting procedures of the transfer clock on master side and of the IICWLn and IICWHn registers on slave side, see **20.4.2 (1)** and **20.4.2 (2)**, respectively.

Remark 2. n = 0

20.3.8 Port mode registers 1, 6 (PM1, PM6) Note

This register sets the input/output of ports 1 and 6 in 1-bit units.

When using the P60/SCLA0 or P14/(SCLA0) pin as clock I/O and the P61/SDAA0 or P15/(SDAA0) pin as serial data I/O, clear PM60, PM61, PM14, and PM15, and output latches of P60, P61, P14, and P15 to 0.

Set the IICEn bit (bit 7 of IICA control register n0 (IICCTLn0)) to 1 before setting the output mode because the P60/SCLA0, P61/SDAA0, P14/(SCLA0), and P15/(SDAA0) pins output a low level (fixed) when the IICEn bit is 0.

The PM1 and PM6 registers can be set by a 1-bit or 8-bit memory manipulation instruction.

Reset signal generation sets this register to FFH.

Figure 20 - 18 Format of Port mode registers 1, 6 (PM1, PM6)

Symbol	7	6	5	4	3	2	1	0	Address	After reset	R/W
PM1	PM17	PM16	PM15	PM14	PM13	PM12	PM11	PM10	FFF21H	FFH	R/W
PM6	1	1	1	1	PM63	PM62	PM61	PM60	FFF26H	FFH	R/W

PMmn	Pmn pin I/O mode selection (m = 1, 6; n = 0 to 7)
0	Output mode (output buffer on)
1	Input mode (output buffer off)

Note 64-pin products only. For details on other products, refer to **4.3 Registers Controlling Port Function**.
The pins to be used depend on the products. Set the PIOR02 bit of the PIOR0 register as follows.

Product	Function	PIOR02 Setting	
		0	1
24-pin products	SCLA0	P01	P14
	SDAA0	P00	P15
32-pin products	SCLA0	P31	P14
	SDAA0	P74	P15
36-, 48-, and 64-pin products	SCLA0	P60	P14
	SDAA0	P61	P15

For details on the setting of the PIOR02 bit, see **4.3.7 Peripheral I/O redirection register 0 (PIOR0)**.

20.4 I²C Bus Mode Functions

20.4.1 Pin configuration

The serial clock pin (SCLAn) and the serial data bus pin (SDAAn) are configured as follows.

(1) SCLAn..... This pin is used for serial clock input and output.
This pin is an N-ch open-drain output for both master and slave devices. Input is Schmitt input.

(2) SDAAn ..... This pin is used for serial data input and output.
This pin is an N-ch open-drain output for both master and slave devices. Input is Schmitt input.

Since outputs from the serial clock line and the serial data bus line are N-ch open-drain outputs, an external pull-up resistor is required.

Figure 20 - 19 Pin Configuration Diagram

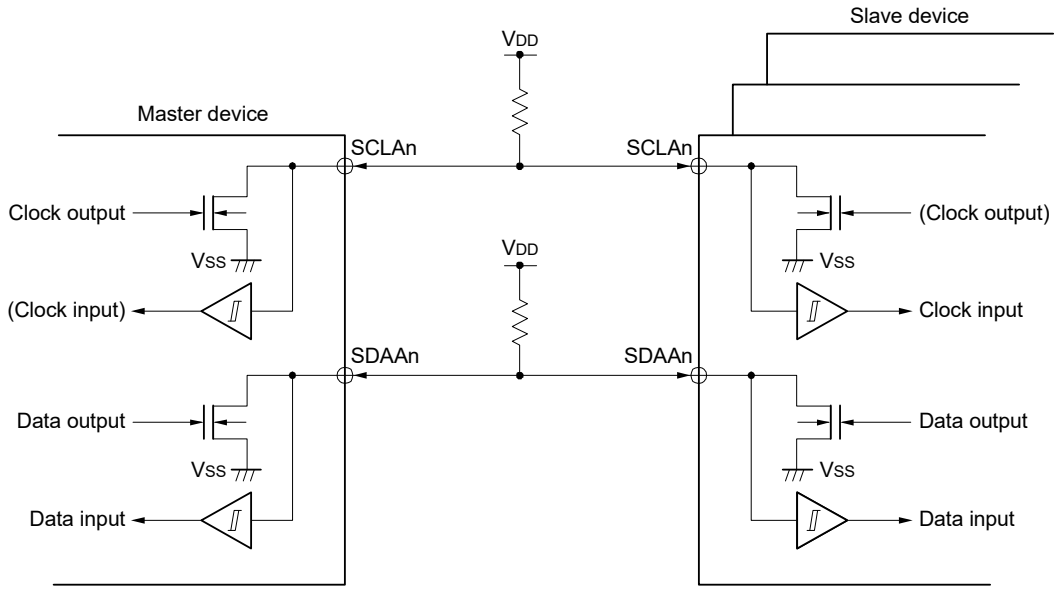

Remark n = 0

20.4.2 Setting transfer clock by using IICWLn and IICWHn registers

(1) Setting transfer clock on master side

$$\text{Transfer clock} = \frac{f_{MCK}}{IICWL + IICWH + f_{MCK}(t_R + t_F)}$$

At this time, the optimal setting values of the IICWLn and IICWHn registers are as follows.
(The fractional parts of all setting values are rounded up.)

• When the fast mode

$$IICWLn = \frac{0.52}{\text{Transfer clock}} \times f_{MCK}$$

$$IICWHn = \left(\frac{0.48}{\text{Transfer clock}} - t_R - t_F\right) \times f_{MCK}$$

• When the standard mode

$$IICWLn = \frac{0.47}{\text{Transfer clock}} \times f_{MCK}$$

$$IICWHn = \left(\frac{0.53}{\text{Transfer clock}} - t_R - t_F\right) \times f_{MCK}$$

• When the fast mode plus

$$IICWLn = \frac{0.50}{\text{Transfer clock}} \times f_{MCK}$$

$$IICWHn = \left(\frac{0.50}{\text{Transfer clock}} - t_R - t_F\right) \times f_{MCK}$$

(2) Setting IICWLn and IICWHn registers on slave side
(The fractional parts of all setting values are truncated.)

• When the fast mode
$IICWLn = 1.3\ \mu s \times f_{MCK}$
$IICWHn = (1.2\ \mu s - t_R - t_F) \times f_{MCK}$

• When the standard mode
$IICWLn = 4.7\ \mu s \times f_{MCK}$
$IICWHn = (5.3\ \mu s - t_R - t_F) \times f_{MCK}$

• When the fast mode plus
$IICWLn = 0.50\ \mu s \times f_{MCK}$
$IICWHn = (0.50\ \mu s - t_R - t_F) \times f_{MCK}$

Caution 1. The maximum operating frequency of the IICA operating clock (f_{MCK}) is 20 MHz (Max.). Only when f_{CLK} exceeds 20 MHz, set bit 0 (PRSn) of IICA control register n1 (IICCTLn1) to 1.

Caution 2. Note the minimum f_{CLK} operating frequency when setting the transfer clock. The minimum f_{CLK} operating frequency for serial interface IICA is determined according to the mode.

Fast mode:	**f_{CLK} = 3.5 MHz (MIN.)**
Fast mode plus:	**f_{CLK} = 10 MHz (MIN.)**
Normal mode:	**f_{CLK} = 1 MHz (MIN.)**

(**Remarks** are listed on the next page.)

Remark 1. Calculate the rise time (t_R) and fall time (t_F) of the SDAAn and SCLAn signals separately, because they differ depending on the pull-up resistance and wire load.

Remark 2. IICWLn: IICA low-level width setting register n
IICWHn: IICA high-level width setting register n
t_F: SDAAn and SCLAn signal falling times
t_R: SDAAn and SCLAn signal rising times
f_{MCK}: IICA operating clock frequency

Remark 3. n = 0

20.5 I²C Bus Definitions and Control Methods

The I²C bus's serial data communication format and the signals used by the I²C bus are described below. Figure 20 - 20 shows the transfer timing for the "start condition", "address", "data", and "stop condition" output via the I²C bus's serial data bus.

Figure 20 - 20 I²C Bus Serial Data Transfer Timing

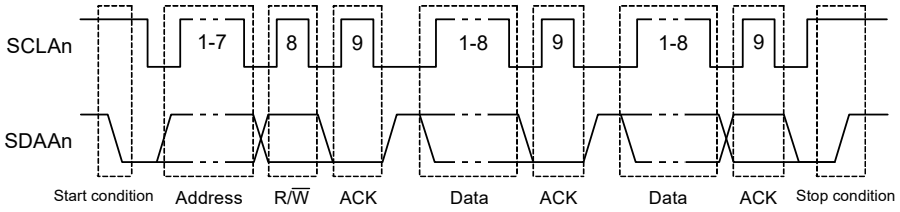

The master device generates the start condition, slave address, and stop condition.
The acknowledge (ACK) can be generated by either the master or slave device (normally, it is output by the device that receives 8-bit data).
The serial clock (SCLAn) is continuously output by the master device. However, in the slave device, the SCLAn pin low level period can be extended and a clock stretch can be inserted.

20.5.1 Start conditions

A start condition is met when the SCLAn pin is at high level and the SDAAn pin changes from high level to low level. The start conditions for the SCLAn pin and SDAAn pin are signals that the master device generates to the slave device when starting a serial transfer. When the device is used as a slave, start conditions can be detected.

Figure 20 - 21 Start Conditions

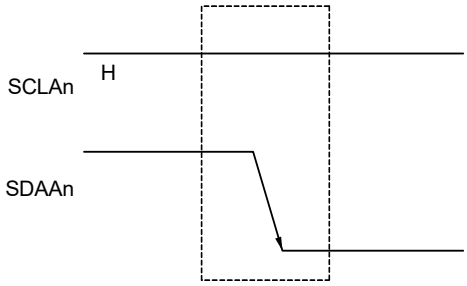

A start condition is output when bit 1 (STTn) of IICA control register n0 (IICCTLn0) is set (1) after a stop condition has been detected (SPDn: Bit 0 of the IICA status register n (IICSn) = 1). When a start condition is detected, bit 1 (STDn) of the IICSn register is set (1).

Remark n = 0

20.5.2 Addresses

The address is defined by the 7 bits of data that follow the start condition.

An address is a 7-bit data segment that is output in order to select one of the slave devices that are connected to the master device via the bus lines. Therefore, each slave device connected via the bus lines must have a unique address.

The slave devices include hardware that detects the start condition and checks whether or not the 7-bit address data matches the data values stored in the slave address register n (SVAn). If the address data matches the SVAn register values, the slave device is selected and communicates with the master device until the master device generates a start condition or stop condition.

Figure 20 - 22 Address

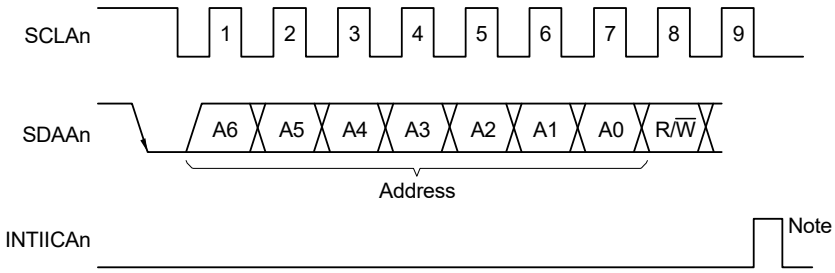

Note INTIICAn is not issued if data other than a local address or extension code is received during slave device operation.

Addresses are output when a total of 8 bits consisting of the slave address and the transfer direction described in **20.5.3 Transfer direction specification** are written to the IICA shift register n (IICAn). The received addresses are written to the IICAn register.

The slave address is assigned to the higher 7 bits of the IICAn register.

20.5.3 Transfer direction specification

In addition to the 7-bit address data, the master device sends 1 bit that specifies the transfer direction.

When this transfer direction specification bit has a value of “0”, it indicates that the master device is transmitting data to a slave device. When the transfer direction specification bit has a value of “1”, it indicates that the master device is receiving data from a slave device.

Figure 20 - 23 Transfer Direction Specification

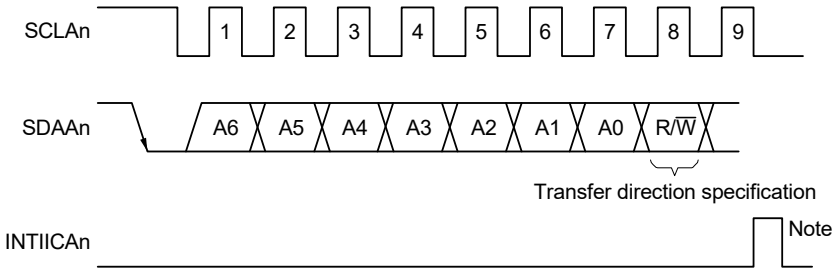

Note INTIICAn is not issued if data other than a local address or extension code is received during slave device operation.

Remark n = 0

20.5.4 Acknowledge (ACK)

ACK is used to check the status of serial data at the transmission and reception sides.
The reception side returns ACK each time it has received 8-bit data.
The transmission side usually receives ACK after transmitting 8-bit data. When ACK is returned from the reception side, it is assumed that reception has been correctly performed and processing is continued. Whether ACK has been detected can be checked by using bit 2 (ACKDn) of the IICA status register n (IICSn).
When the master receives the last data item, it does not return ACK and instead generates a stop condition. If a slave does not return ACK after receiving data, the master outputs a stop condition or restart condition and stops transmission. If ACK is not returned, the possible causes are as follows.

<1> Reception was not performed normally.
<2> The final data item was received.
<3> The reception side specified by the address does not exist.

To generate ACK, the reception side makes the SDAAn line low at the ninth clock (indicating normal reception).
Automatic generation of ACK is enabled by setting bit 2 (ACKEn) of IICA control register n0 (IICCTLn0) to 1. Bit 3 (TRCn) of the IICSn register is set by the data of the eighth bit that follows 7-bit address information. Usually, set the ACKEn bit to 1 for reception (TRCn = 0).
If a slave can receive no more data during reception (TRCn = 0) or does not require the next data item, then the slave must inform the master, by clearing the ACKEn bit to 0, that it will not receive any more data.
When the master does not require the next data item during reception (TRCn = 0), it must clear the ACKEn bit to 0 so that ACK is not generated. In this way, the master informs a slave at the transmission side that it does not require any more data (transmission will be stopped).

Figure 20 - 24 ACK

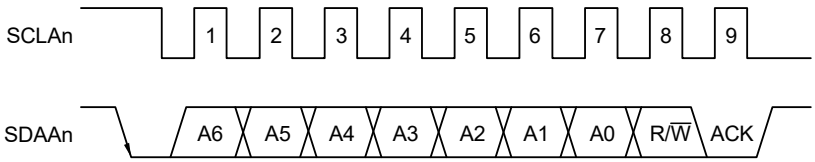

When the local address is received, ACK is automatically generated, regardless of the value of the ACKEn bit.
When an address other than that of the local address is received, ACK is not generated (NACK).
When an extension code is received, ACK is generated if the ACKEn bit is set to 1 in advance.
How ACK is generated when data is received differs as follows depending on the setting of the clock stretch timing.

- When 8-clock clock stretch state is selected (bit 3 (WTIMn) of IICCTLn0 register = 0):
  By setting the ACKEn bit to 1 before releasing the clock stretch state, ACK is generated at the falling edge of the eighth clock of the SCLAn pin.
- When 9-clock clock stretch state is selected (bit 3 (WTIMn) of IICCTLn0 register = 1):
  ACK is generated by setting the ACKEn bit to 1 in advance.

Remark n = 0

20.5.5 Stop condition

When the SCLAn pin is at high level, changing the SDAAn pin from low level to high level generates a stop condition.

A stop condition is a signal that the master device generates to the slave device when serial transfer has been completed. When the device is used as a slave, stop conditions can be detected.

Figure 20 - 25 Stop Condition

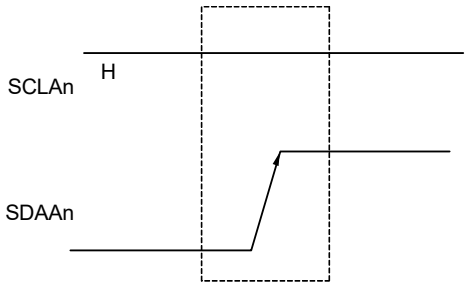

A stop condition is generated when bit 0 (SPTn) of IICA control register n0 (IICCTLn0) is set to 1. When the stop condition is detected, bit 0 (SPDn) of the IICA status register n (IICSn) is set to 1 and INTIICAn is generated when bit 4 (SPIEn) of the IICCTLn0 register is set to 1.

Remark n = 0

20.5.6 Clock stretch

The clock stretch is used to notify the communication partner that a device (master or slave) is preparing to transmit or receive data (i.e., is in a clock stretch state).

Setting the SCLAn pin to low level notifies the communication partner of the clock stretch state. When clock stretch state has been canceled for both the master and slave devices, the next data transfer can begin.

Figure 20 - 26 Clock stretch (1/2)

(1) When master device has a nine-clock clock stretch and slave device has an eight-clock clock stretch (master transmits, slave receives, and ACKEn = 1)

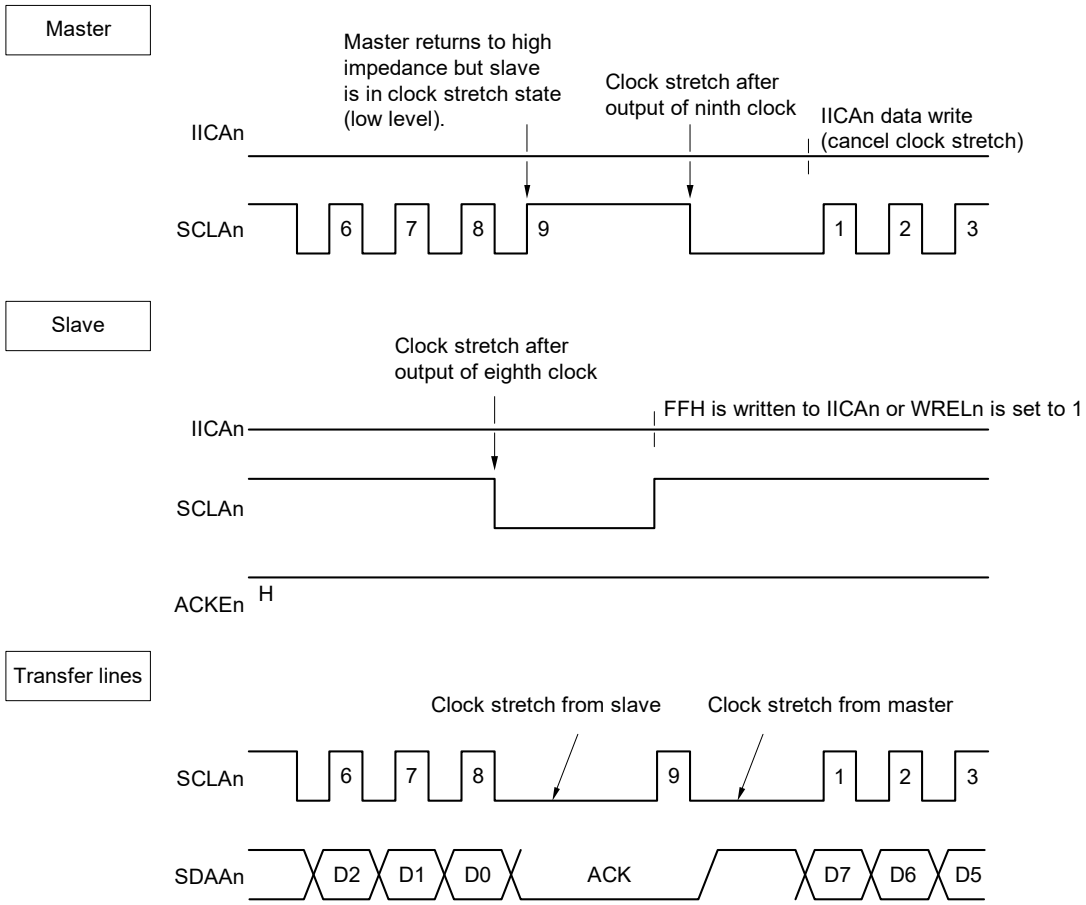

Remark n = 0

Figure 20 - 27 Clock stretch (2/2)

(2) When master and slave devices both have a nine-clock clock stretch
(master transmits, slave receives, and ACKEn = 1)

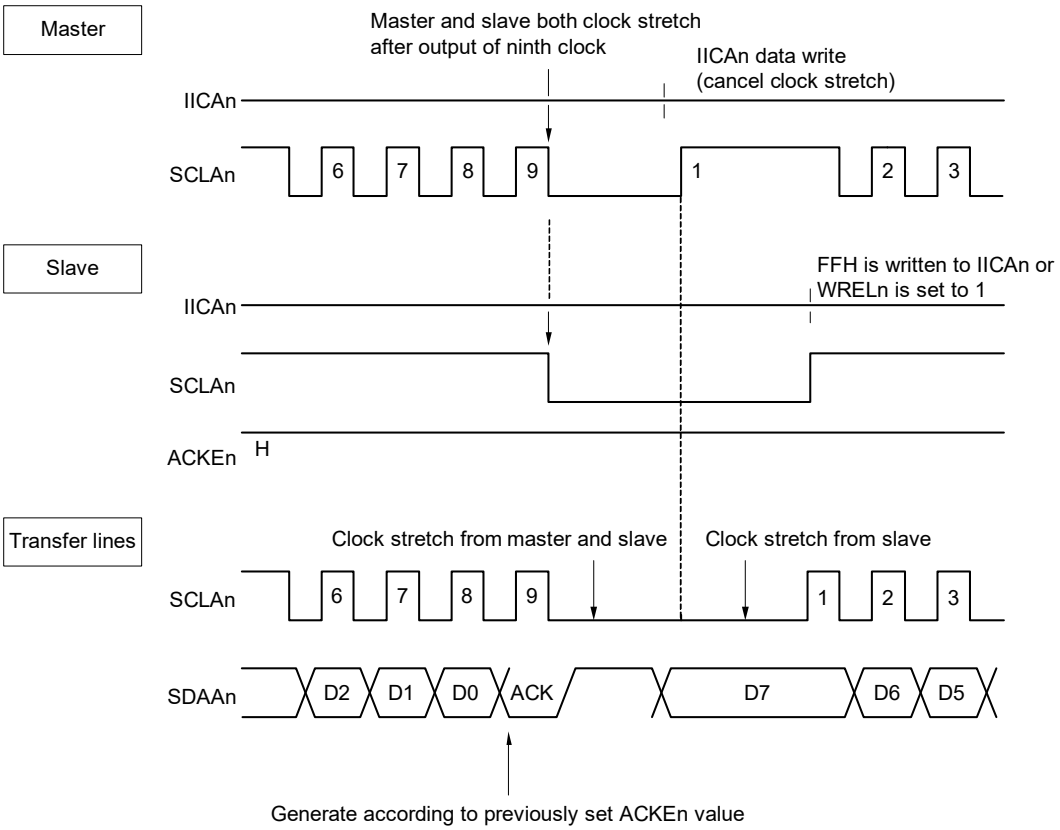

Remark ACKEn: Bit 2 of IICA control register n0 (IICCTLn0)
WRELn: Bit 5 of IICA control register n0 (IICCTLn0)

A clock stretch may be automatically generated depending on the setting of bit 3 (WTIMn) of IICA control register n0 (IICCTLn0).
Normally, the receiving side cancels the clock stretch state when bit 5 (WRELn) of the IICCTLn0 register is set to 1 or when FFH is written to the IICA shift register n (IICAn), and the transmitting side cancels the clock stretch state when data is written to the IICAn register.
The master device can also cancel the clock stretch state via either of the following methods.

- By setting bit 1 (STTn) of the IICCTLn0 register to 1
- By setting bit 0 (SPTn) of the IICCTLn0 register to 1

Remark n = 0

20.5.7 Canceling clock stretch

The I²C usually cancels a clock stretch state by the following processing.

- Writing data to the IICA shift register n (IICAn)
- Setting bit 5 (WRELn) of IICA control register n0 (IICCTLn0) (canceling clock stretch)
- Setting bit 1 (STTn) of the IICCTLn0 register (generating start condition) Note
- Setting bit 0 (SPTn) of the IICCTLn0 register (generating stop condition) Note

Note Master only

When the above clock stretch canceling processing is executed, the I²C cancels the clock stretch state and communication is resumed.
To cancel a clock stretch state and transmit data (including addresses), write the data to the IICAn register.
To receive data after canceling a clock stretch state, or to complete data transmission, set bit 5 (WRELn) of the IICCTLn0 register to 1.
To generate a restart condition after canceling a clock stretch state, set bit 1 (STTn) of the IICCTLn0 register to 1.
To generate a stop condition after canceling a clock stretch state, set bit 0 (SPTn) of the IICCTLn0 register to 1.
Execute the canceling processing only once for one clock stretch state.
If, for example, data is written to the IICAn register after canceling a clock stretch state by setting the WRELn bit to 1, an incorrect value may be output to SDAAn line because the timing for changing the SDAAn line conflicts with the timing for writing the IICAn register.
In addition to the above, communication is stopped if the IICEn bit is cleared to 0 when communication has been aborted, so that the clock stretch state can be canceled.
If the I²C bus has deadlocked due to noise, processing is saved from communication by setting bit 6 (LRELn) of the IICCTLn0 register, so that the clock stretch state can be canceled.

Caution **If a processing to cancel a clock stretch state is executed when WUPn = 1, the clock stretch state will not be canceled.**

Remark n = 0

20.5.8 Interrupt request (INTIICAn) generation timing and clock stretch control

The setting of bit 3 (WTIMn) of IICA control register n0 (IICCTLn0) determines the timing by which INTIICAn is generated and the corresponding clock stretch control, as shown in Table 20 - 2.

Table 20 - 2 INTIICAn Generation Timing and Clock Stretch Control

WTIMn	During Slave Device Operation			During Master Device Operation		
	Address	Data Reception	Data Transmission	Address	Data Reception	Data Transmission
0	9 Notes 1, 2	8 Note 2	8 Note 2	9	8	8
1	9 Notes 1, 2	9 Note 2	9 Note 2	9	9	9

Note 1. The slave device's INTIICAn signal and clock stretch period occurs at the falling edge of the ninth clock only when there is a match with the address set to the slave address register n (SVAn).
At this point, ACK is generated regardless of the value set to the IICCTLn0 register's bit 2 (ACKEn). For a slave device that has received an extension code, INTIICAn occurs at the falling edge of the eighth clock.
However, if the address does not match after restart, INTIICAn is generated at the falling edge of the 9th clock, but clock stretch does not occur.

Note 2. If the received address does not match the contents of the slave address register n (SVAn) and extension code is not received, neither INTIICAn nor a clock stretch occurs.

Remark The numbers in the table indicate the number of the serial clock's clock signals. Interrupt requests and clock stretch control are both synchronized with the falling edge of these clock signals.

(1) During address transmission/reception
- Slave device operation: Interrupt and clock stretch timing are determined depending on the conditions described in Notes 1 and 2 above, regardless of the WTIMn bit.
- Master device operation: Interrupt and clock stretch timing occur at the falling edge of the ninth clock regardless of the WTIMn bit.

(2) During data reception
- Master/slave device operation: Interrupt and clock stretch timing are determined according to the WTIMn bit.

(3) During data transmission
- Master/slave device operation: Interrupt and clock stretch timing are determined according to the WTIMn bit.

Remark n = 0

(4) Clock stretch cancellation method

The four clock stretch cancellation methods are as follows.

- Writing data to the IICA shift register n (IICAn)
- Setting bit 5 (WRELn) of IICA control register n0 (IICCTLn0) (canceling clock stretch)
- Setting bit 1 (STTn) of IICCTLn0 register (generating start condition)[Note]
- Setting bit 0 (SPTn) of IICCTLn0 register (generating stop condition)[Note]

Note Master only.

When an 8-clock clock stretch has been selected (WTIMn = 0), the presence/absence of ACK generation must be determined prior to clock stretch cancellation.

(5) Stop condition detection

INTIICAn is generated when a stop condition is detected (only when SPIEn = 1).

20.5.9 Address match detection method

In I^{2}C bus mode, the master device can select a particular slave device by transmitting the corresponding slave address.

Address match can be detected automatically by hardware. An interrupt request (INTIICAn) occurs when the address set to the slave address register n (SVAn) matches the slave address sent by the master device, or when an extension code has been received.

20.5.10 Error detection

In I^{2}C bus mode, the status of the serial data bus (SDAAn) during data transmission is captured by the IICA shift register n (IICAn) of the transmitting device, so the IICA data prior to transmission can be compared with the transmitted IICA data to enable detection of transmission errors. A transmission error is judged as having occurred when the compared data values do not match.

Remark n = 0

20.5.11 Extension code

(1) When the higher 4 bits of the receive address are either “0000” or “1111”, the extension code reception flag (EXCn) is set to 1 for extension code reception and an interrupt request (INTIICAn) is issued at the falling edge of the eighth clock. The local address stored in the slave address register n (SVAn) is not affected.

(2) The settings below are specified if 11110xx0 is transferred from the master by using a 10-bit address transfer when the SVAn register is set to 11110xx0. Note that INTIICAn occurs at the falling edge of the eighth clock.

- Higher four bits of data match: EXCn = 1
- Seven bits of data match: COIn = 1

Remark EXCn: Bit 5 of IICA status register n (IICSn)
COIn: Bit 4 of IICA status register n (IICSn)

(3) Since the processing after the interrupt request occurs differs according to the data that follows the extension code, such processing is performed by software.
If the extension code is received while a slave device is operating, then the slave device is participating in communication even if its address does not match.
For example, after the extension code is received, if you do not wish to operate the target device as a slave device, set bit 6 (LRELn) of IICA control register n0 (IICCTLn0) to 1 to set the standby mode for the next communication operation.

Table 20 - 3 Bit Definitions of Major Extension Codes

Slave Address	R/W Bit	Description
0000 000	0	General call address
1111 0xx	0	10-bit slave address specification (during address authentication)
1111 0xx	1	10-bit slave address specification (after address match, when read command is issued)

Remark 1. See the I^2C bus specifications issued by NXP Semiconductors for details of extension codes other than those described above.
Remark 2. n = 0

20.5.12 Arbitration

When several master devices simultaneously generate a start condition (when the STTn bit is set to 1 before the STDn bit is set to 1), communication among the master devices is performed as the number of clocks are adjusted until the data differs. This kind of operation is called arbitration.

When one of the master devices loses in arbitration, an arbitration loss flag (ALDn) in the IICA status register n (IICSn) is set (1) via the timing by which the arbitration loss occurred, and the SCLAn and SDAAn lines are both set to high impedance, which releases the bus.

The arbitration loss is detected based on the timing of the next interrupt request (the eighth or ninth clock, when a stop condition is detected, etc.) and the ALDn = 1 setting that has been made by software.

For details of interrupt request timing, see **20.5.8 Interrupt request (INTIICAn) generation timing and clock stretch control**.

Remark STDn: Bit 1 of IICA status register n (IICSn)
STTn: Bit 1 of IICA control register n0 (IICCTLn0)

Figure 20 - 28 Arbitration Timing Example

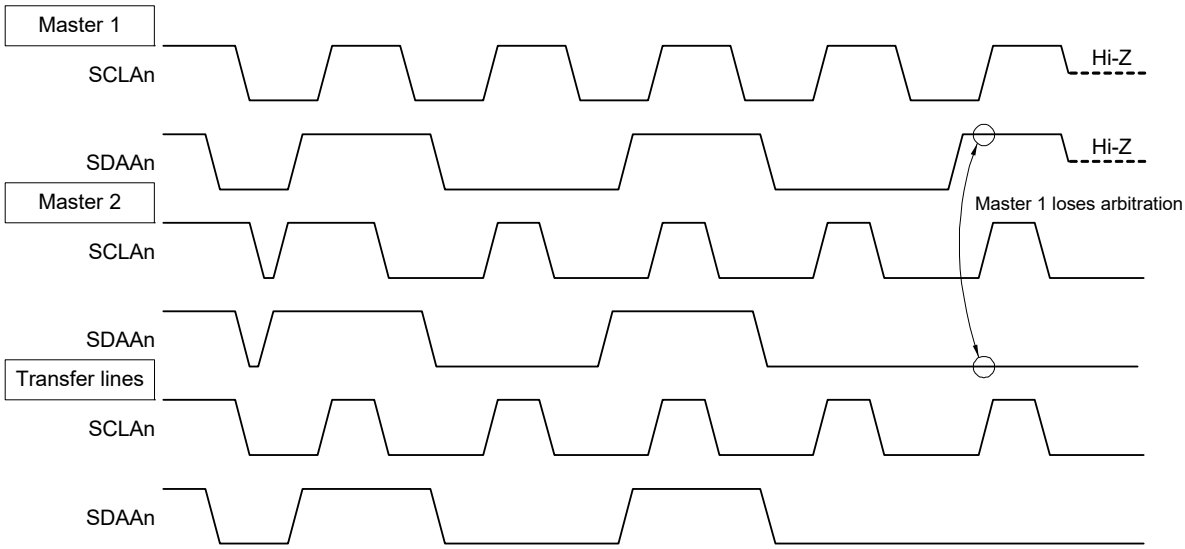

Remark n = 0

Table 20 - 4 Status During Arbitration and Interrupt Request Generation Timing

Status During Arbitration	Interrupt Request Generation Timing
During address transmission	At falling edge of eighth or ninth clock following byte transfer Note 1
Read/write data after address transmission	
During extension code transmission	
Read/write data after extension code transmission	
During data transmission	
During ACK transfer period after data transmission	
When restart condition is detected during data transfer	
When stop condition is detected during data transfer	When stop condition is generated (when SPIEn = 1)Note 2
When data is at low level while attempting to generate a restart condition	At falling edge of eighth or ninth clock following byte transferNote 1
When stop condition is detected while attempting to generate a restart condition	When stop condition is generated (when SPIEn = 1)Note 2
When data is at low level while attempting to generate a stop condition	At falling edge of eighth or ninth clock following byte transferNote 1
When SCLAn is at low level while attempting to generate a restart condition	

Note 1. When the WTIMn bit (bit 3 of IICA control register n0 (IICCTLn0)) = 1, an interrupt request occurs at the falling edge of the ninth clock. When WTIMn = 0 and the extension code's slave address is received, an interrupt request occurs at the falling edge of the eighth clock.

Note 2. When there is a chance that arbitration will occur, set SPIEn = 1 for master device operation.

Remark 1. SPIEn: Bit 4 of IICA control register n0 (IICCTLn0)

Remark 2. n = 0

20.5.13 Wakeup function

The I²C bus slave function is a function that generates an interrupt request signal (INTIICAn) when a local address and extension code have been received.

This function makes processing more efficient by preventing unnecessary INTIICAn signal from occurring when addresses do not match.

When a start condition is detected, wakeup standby mode is set. This wakeup standby mode is in effect while addresses are transmitted due to the possibility that an arbitration loss may change the master device (which has generated a start condition) to a slave device.

To use the wakeup function in the STOP mode, set the WUPn bit to 1. Addresses can be received regardless of the operation clock. An interrupt request signal (INTIICAn) is also generated when a local address and extension code have been received. Operation returns to normal operation by using an instruction to clear (0) the WUPn bit after this interrupt has been generated.

Figure 20 - 29 shows the flow for setting WUPn = 1 and Figure 20 - 30 shows the flow for setting WUPn = 0 upon an address match.

Figure 20 - 29 Flow When Setting WUPn = 1

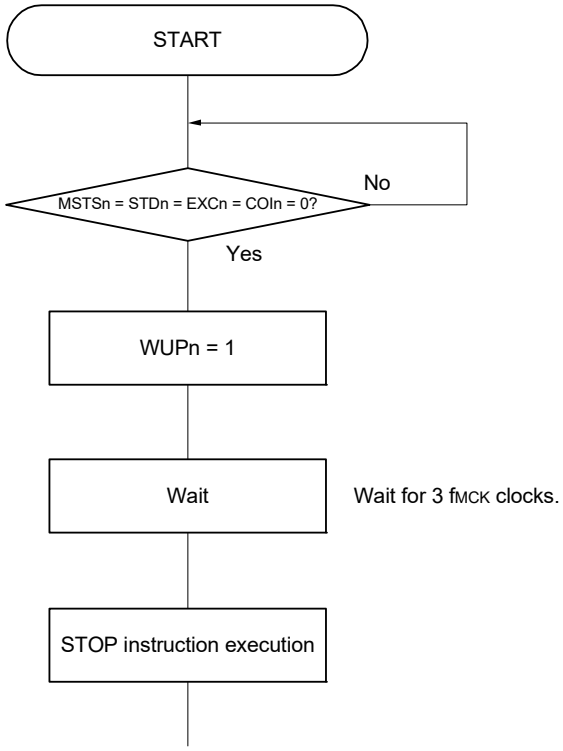

Remark n = 0

Figure 20 - 30 Flow When Setting WUPn = 0 upon Address Match (Including Extension Code Reception)

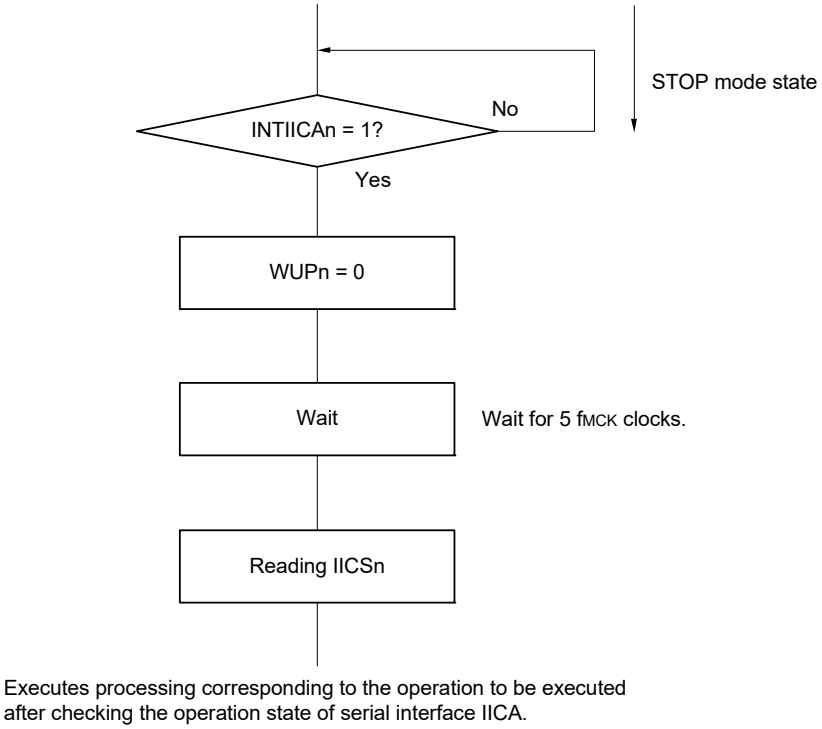

Use the following flows to perform the processing to release the STOP mode other than by an interrupt request (INTIICAn) generated from serial interface IICA.

- When operating as the master device for the next IIC communication: Flow shown in Figure 20 - 31
- When operating as a slave device for the next IIC communication:
  - When the INTIICAn interrupt is used to return from the mode:
    - Same as the flow in Figure 20 - 30
  - When an interrupt other than the INTIICAn interrupt is used to return from the mode:
    - Continue operation while WUPn = 1 until an INTIICAn interrupt is generated.

Remark n = 0

Figure 20 - 31 When Operating as Master Device after Releasing STOP Mode other than by INTIICAn

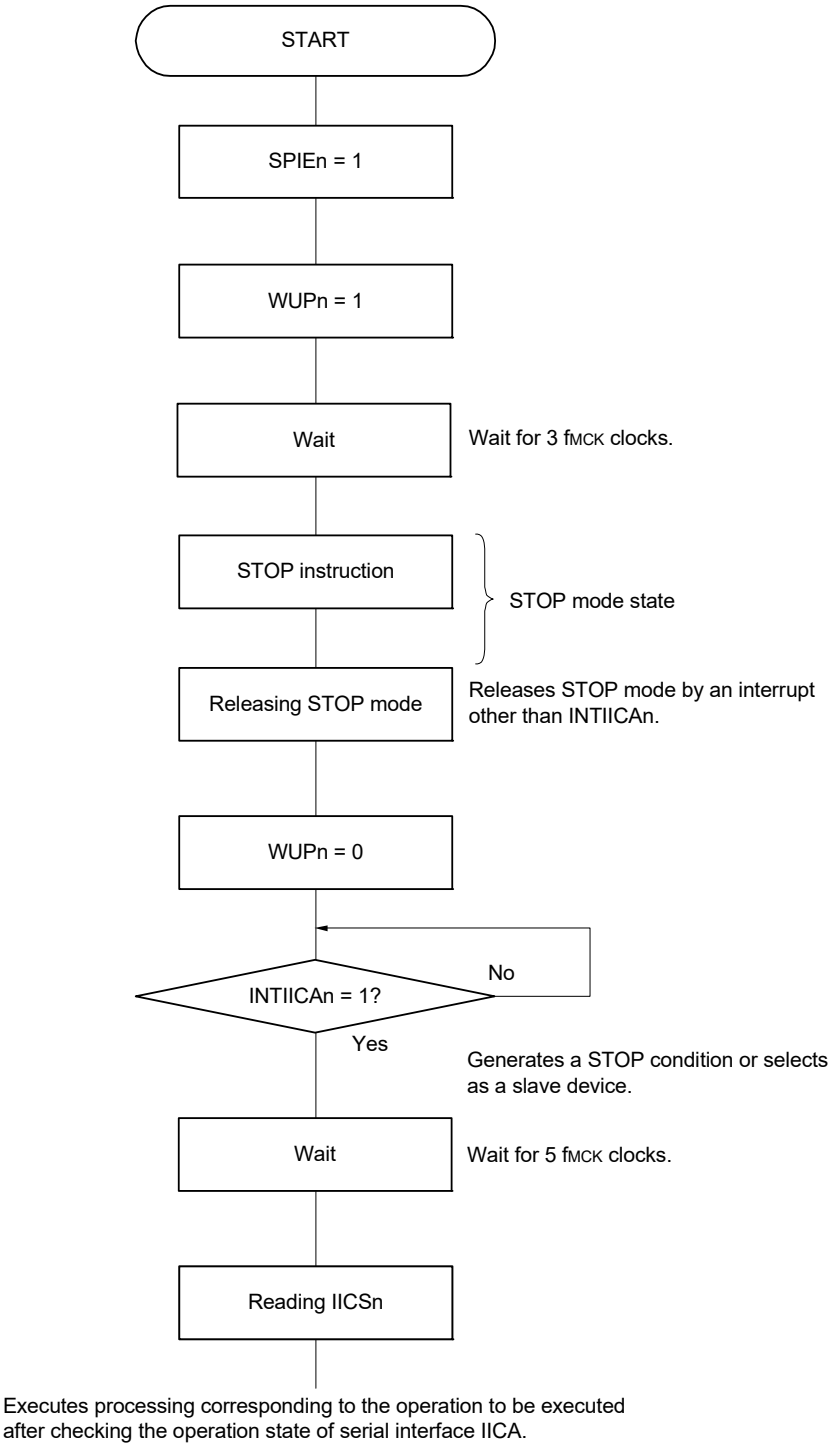

Remark n = 0

20.5.14 Communication reservation

(1) When communication reservation function is enabled (bit 0 (IICRSVn) of IICA flag register n (IICFn) = 0)
To start master device communications when not currently using a bus, a communication reservation can be made to enable transmission of a start condition when the bus is released. There are two modes under which the bus is not used.

- When arbitration results in neither master nor slave operation
- When an extension code is received and slave operation is disabled (ACK is not returned and the bus was released by setting bit 6 (LRELn) of IICA control register n0 (IICCTLn0) to 1 and saving communication).

If bit 1 (STTn) of the IICCTLn0 register is set to 1 while the bus is not used (after a stop condition is detected), a start condition is automatically generated and wait state is set.
If an address is written to the IICA shift register n (IICAn) after bit 4 (SPIEn) of the IICCTLn0 register was set to 1, and it was detected by generation of an interrupt request signal (INTIICAn) that the bus was released (detection of the stop condition), then the device automatically starts communication as the master. Data written to the IICAn register before the stop condition is detected is invalid.
When the STTn bit has been set to 1, the operation mode (as start condition or as communication reservation) is determined according to the bus status.

- If the bus has been released.....a start condition is generated
- If the bus has not been released (standby mode).....communication reservation

Check whether the communication reservation operates or not by using the MSTSn bit (bit 7 of the IICA status register n (IICSn)) after the STTn bit is set to 1 and the wait time elapses.
Use software to secure the wait time calculated by the following expression.

Wait time (number of f_{MCK} clocks) from setting STTn = 1 to checking the MSTSn flag: (IICWLn setting value + IICWHn setting value + 4) + t_F × 2 × f_{MCK} [clocks]

Remark 1. IICWLn: IICA low-level width setting register n
IICWHn: IICA high-level width setting register n
t_F: SDAAn and SCLAn signal falling times
f_{MCK}: IICA operating clock frequency
Remark 2. n = 0

Figure 20 - 32 shows the Communication Reservation Timing.

Figure 20 - 32 Communication Reservation Timing

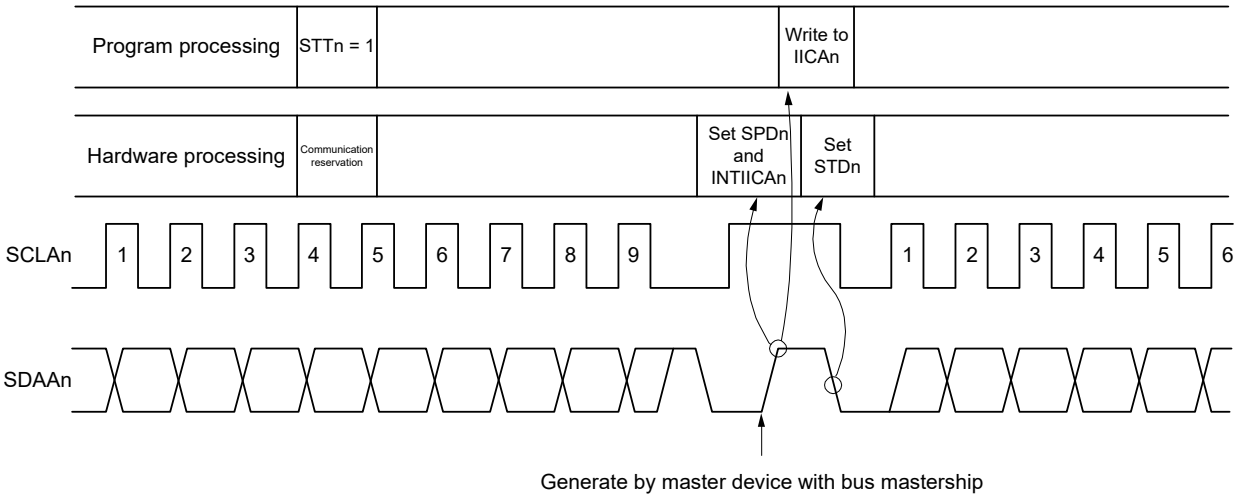

Remark IICAn: IICA shift register n

STTn: Bit 1 of IICA control register n0 (IICCTLn0)

STDn: Bit 1 of IICA status register n (IICSn)

SPDn: Bit 0 of IICA status register n (IICSn)

Communication reservations are accepted via the timing shown in Figure 20 - 33. After bit 1 (STDn) of the IICA status register n (IICSn) is set to 1, a communication reservation can be made by setting bit 1 (STTn) of IICA control register n0 (IICCTLn0) to 1 before a stop condition is detected.

Figure 20 - 33 Timing for Accepting Communication Reservations

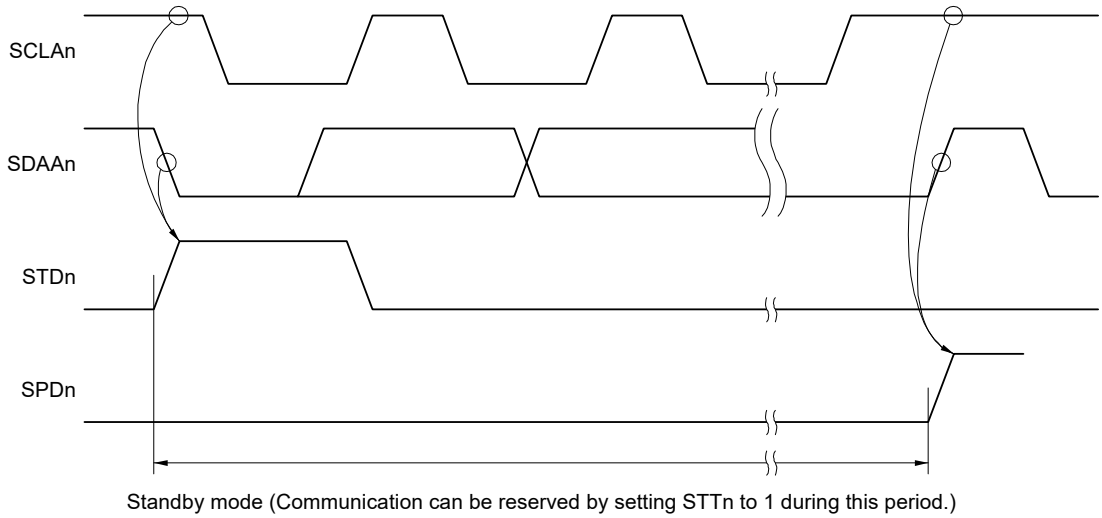

Figure 20 - 34 shows the Communication Reservation Protocol.

Remark n = 0

Figure 20 - 34 Communication Reservation Protocol

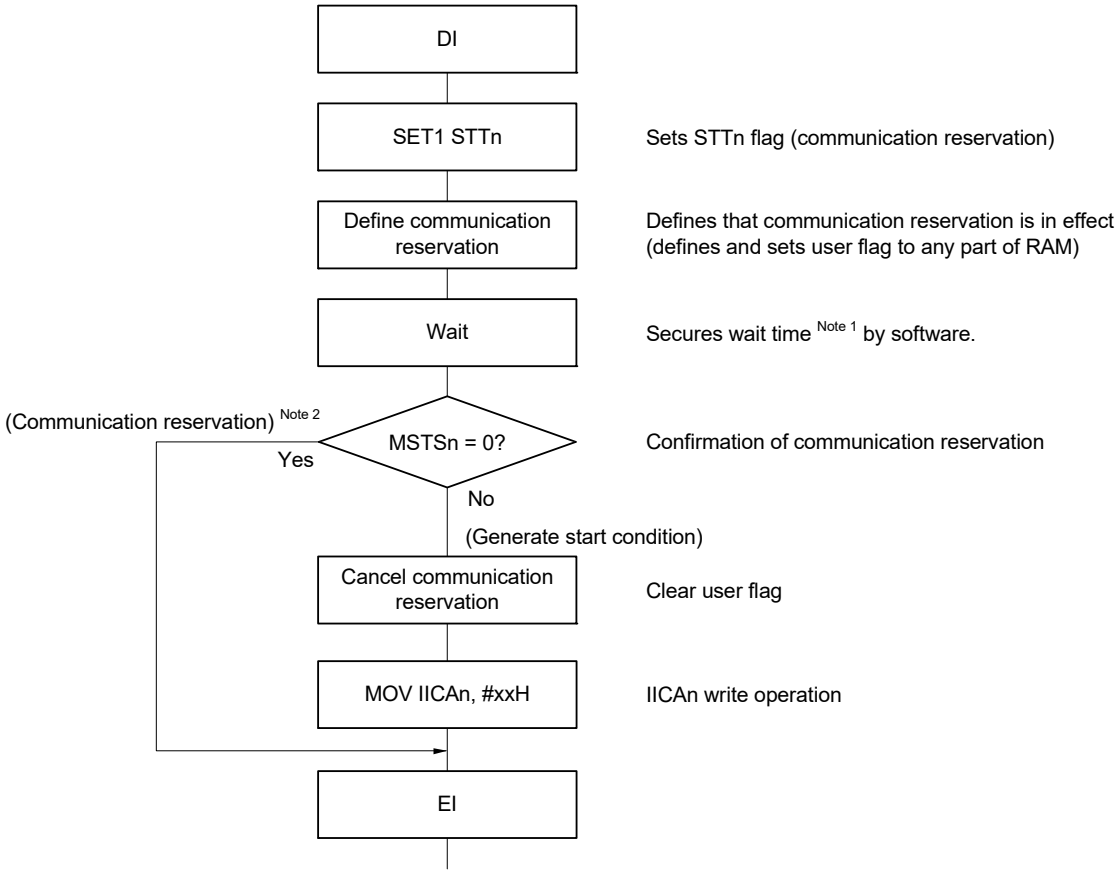

Note 1. The wait time is calculated as follows.
(IICWLn setting value + IICWHn setting value + 4) + $t_F \times 2 \times f_{MCK}$: [clocks]

Note 2. The communication reservation operation executes a write to the IICA shift register n (IICAn) when a stop condition interrupt request occurs.

Remark1. STTn: Bit 1 of IICA control register n0 (IICCTLn0)
MSTSn: Bit 7 of IICA status register n (IICSn)
IICAn: IICA shift register n
IICWLn: IICA low-level width setting register n
IICWHn: IICA high-level width setting register n
t_F: SDAAn and SCLAn signal falling times
f_{MCK}: IICA operating clock frequency

Remark2. n = 0

(2) When communication reservation function is disabled (bit 0 (IICRSVn) of IICA flag register n (IICFn) = 1)
When bit 1 (STTn) of IICA control register n0 (IICCTLn0) is set to 1 when the bus is not used in a communication during bus communication, this request is rejected and a start condition is not generated. The following two statuses are included in the status where bus is not used.

- When arbitration results in neither master nor slave operation
- When an extension code is received and slave operation is disabled (ACK is not returned and the bus was released by setting bit 6 (LRELn) of the IICCTLn0 register to 1 and saving communication)

To confirm whether the start condition was generated or request was rejected, check STCFn (bit 7 of the IICFn register). It takes up to five f_{MCK} clocks until the STCFn bit is set to 1 after setting STTn = 1. Therefore, secure this time by software.

Remark n = 0

20.5.15 Cautions

(1) When STCENn = 0

Immediately after I²C operation is enabled (IICEn = 1), the bus communication status (IICBSYn = 1) is recognized regardless of the actual bus status. When changing from a mode in which no stop condition has been detected to a master device communication mode, first generate a stop condition to release the bus, then perform master device communication.

When using multiple masters, it is not possible to perform master device communication when the bus has not been released (when a stop condition has not been detected).

Use the following sequence for generating a stop condition.

<1> Set IICA control register n1 (IICCTLn1).
<2> Set bit 7 (IICEn) of IICA control register n0 (IICCTLn0) to 1.
<3> Set bit 0 (SPTn) of the IICCTLn0 register to 1.

(2) When STCENn = 1

Immediately after I²C operation is enabled (IICEn = 1), the bus released status (IICBSYn = 0) is recognized regardless of the actual bus status. To generate the first start condition (STTn = 1), it is necessary to confirm that the bus has been released, so as to not disturb other communications.

(3) If other I²C communications are already in progress

If I²C operation is enabled and the device participates in communication already in progress when the SDAAn pin is low and the SCLAn pin is high, the macro of I²C recognizes that the SDAAn pin has gone low (detects a start condition). If the value on the bus at this time can be recognized as an extension code, ACK is returned, but this interferes with other I²C communications. To avoid this, start I²C in the following sequence.

<1> Clear bit 4 (SPIEn) of the IICCTLn0 register to 0 to disable generation of an interrupt request signal (INTIICAn) when the stop condition is detected.
<2> Set bit 7 (IICEn) of the IICCTLn0 register to 1 to enable the operation of I²C.
<3> Wait for detection of the start condition.
<4> Set bit 6 (LRELn) of the IICCTLn0 register to 1 before ACK is returned (4 to 72 f_{MCK} clocks after setting the IICEn bit to 1), to forcibly disable detection.

(4) Setting the STTn and SPTn bits (bits 1 and 0 of the IICCTLn0 register) again after they are set and before they are cleared to 0 is prohibited.

(5) When transmission is reserved, set the SPIEn bit (bit 4 of the IICCTLn0 register) to 1 so that an interrupt request is generated when the stop condition is detected. Transfer is started when communication data is written to the IICA shift register n (IICAn) after the interrupt request is generated. Unless the interrupt is generated when the stop condition is detected, the device stops in the wait state because the interrupt request is not generated when communication is started. However, it is not necessary to set the SPIEn bit to 1 when the MSTSn bit (bit 7 of the IICA status register n (IICSn)) is detected by software.

Remark n = 0

20.5.16 Communication operations

The following shows three operation procedures with the flowchart.

(1) Master operation in single master system

The flowchart when using the RL78/G1F as the master in a single master system is shown below.

This flowchart is broadly divided into the initial settings and communication processing. Execute the initial settings at startup. If communication with the slave is required, prepare the communication and then execute communication processing.

(2) Master operation in multimaster system

In the I^2C bus multimaster system, whether the bus is released or used cannot be judged by the I^2C bus specifications when the bus takes part in a communication. Here, when data and clock are at a high level for a certain period (1 frame), the RL78/G1F takes part in a communication with bus released state.

This flowchart is broadly divided into the initial settings, communication waiting, and communication processing. The processing when the RL78/G1F looses in arbitration and is specified as the slave is omitted here, and only the processing as the master is shown. Execute the initial settings at startup to take part in a communication. Then, wait for the communication request as the master or wait for the specification as the slave. The actual communication is performed in the communication processing, and it supports the transmission/reception with the slave and the arbitration with other masters.

(3) Slave operation

An example of when the RL78/G1F is used as the I^2C bus slave is shown below.

When used as the slave, operation is started by an interrupt. Execute the initial settings at startup, then wait for the INTIICAn interrupt occurrence (communication waiting). When an INTIICAn interrupt occurs, the communication status is judged and its result is passed as a flag over to the main processing.

By checking the flags, necessary communication processing is performed.

Remark n = 0

(1) Master operation in single master system

Figure 20 - 35 Master Operation in Single-Master System

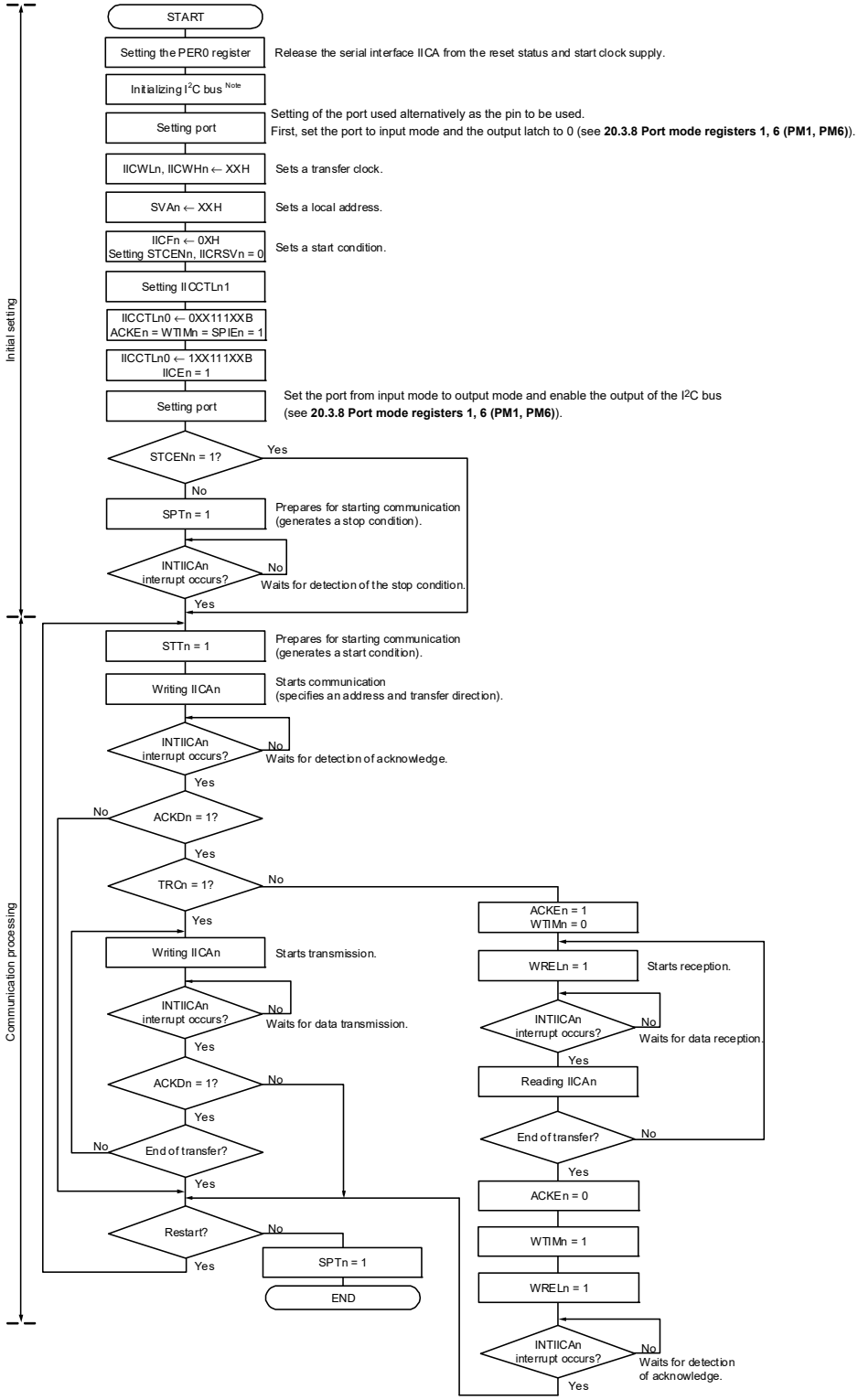

Note Release (SCLAn and SDAAn pins = high level) the I2C bus in conformance with the specifications of the product that is communicating. If EEPROM is outputting a low level to the SDAAn pin, for example, set the SCLAn pin in the output port mode, and output a clock pulse from the output port until the SDAAn pin is constantly at high level.

Remark1. Conform to the specifications of the product that is communicating, with respect to the transmission and reception formats.

Remark2. n = 0

(2) Master operation in multimaster system

Figure 20 - 36 Master Operation in Multi-Master System (1/3)

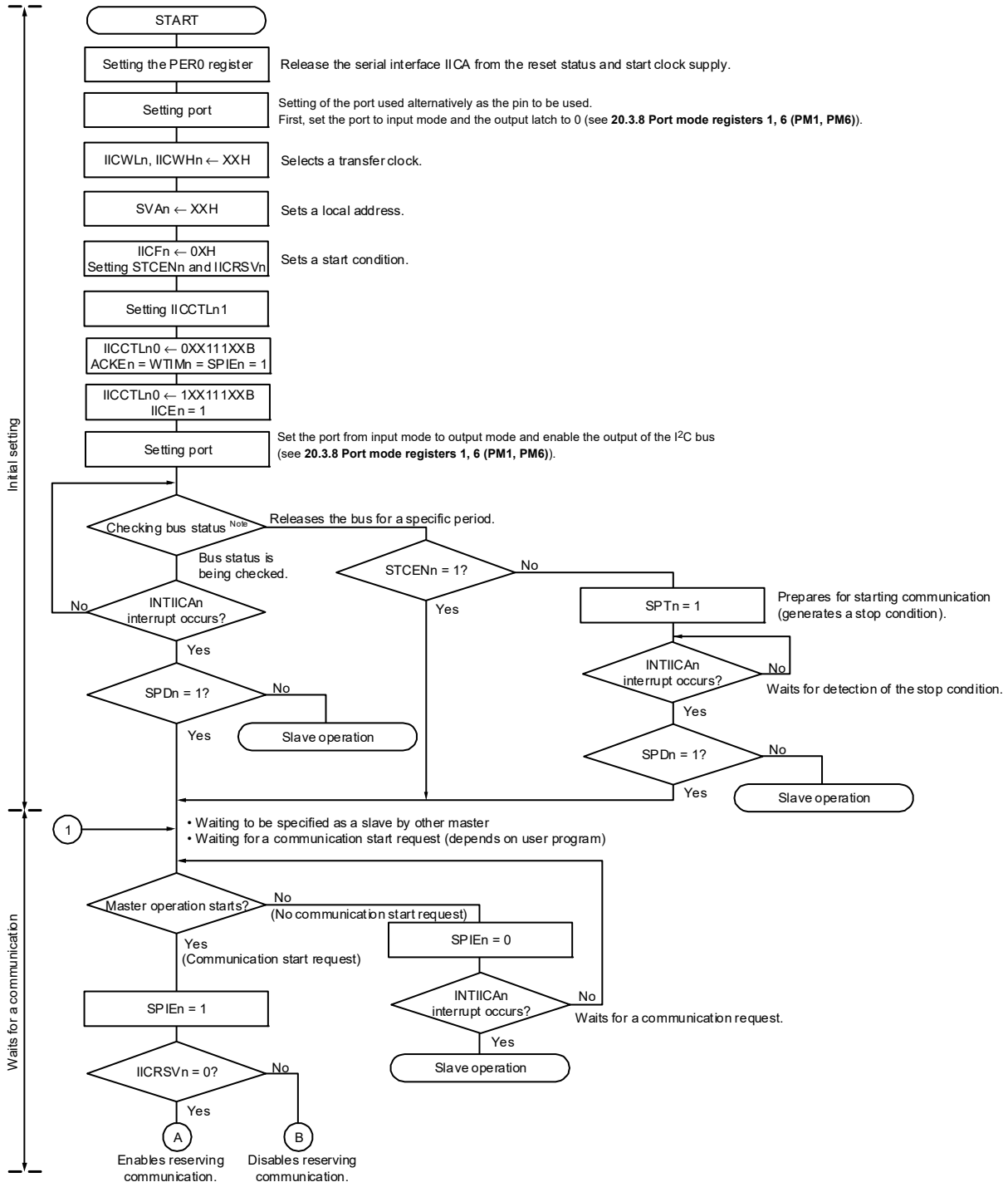

Note Confirm that the bus is released (CLDn bit = 1, DADn bit = 1) for a specific period (for example, for a period of one frame). If the SDAAn pin is constantly at low level, decide whether to release the I2C bus (SCLAn and SDAAn pins = high level) in conformance with the specifications of the product that is communicating.

Remark n = 0

Figure 20 - 37 Master Operation in Multi-Master System (2/3)

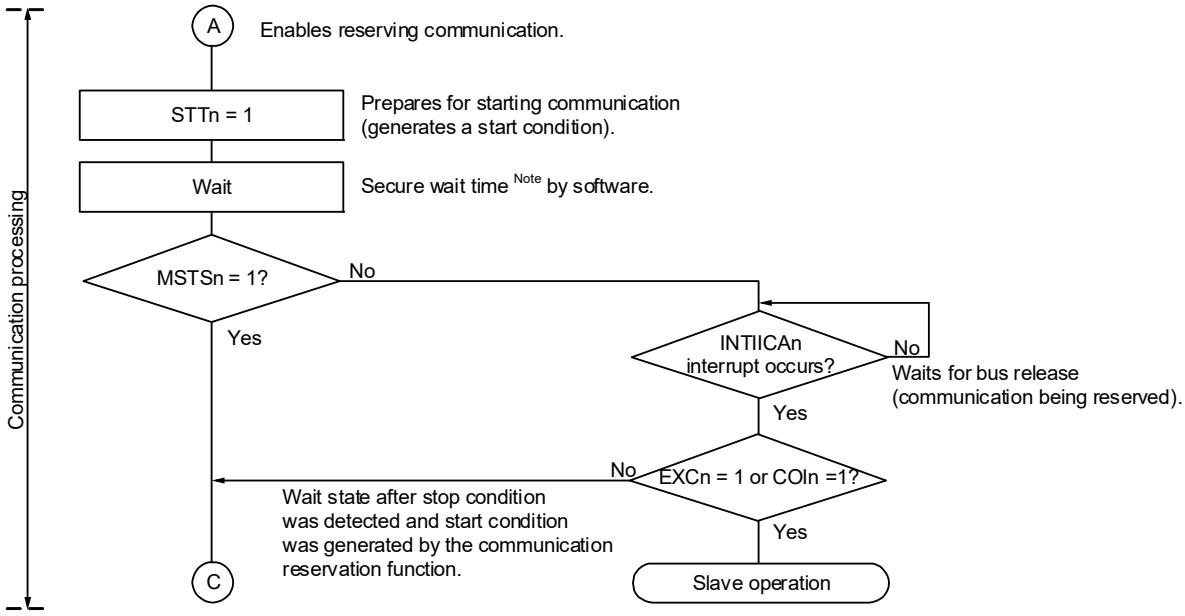

Note The wait time is calculated as follows.
(IICWLn setting value + IICWHn setting value + 4) + $t_F \times 2 \times f_{MCK}$ [clocks]

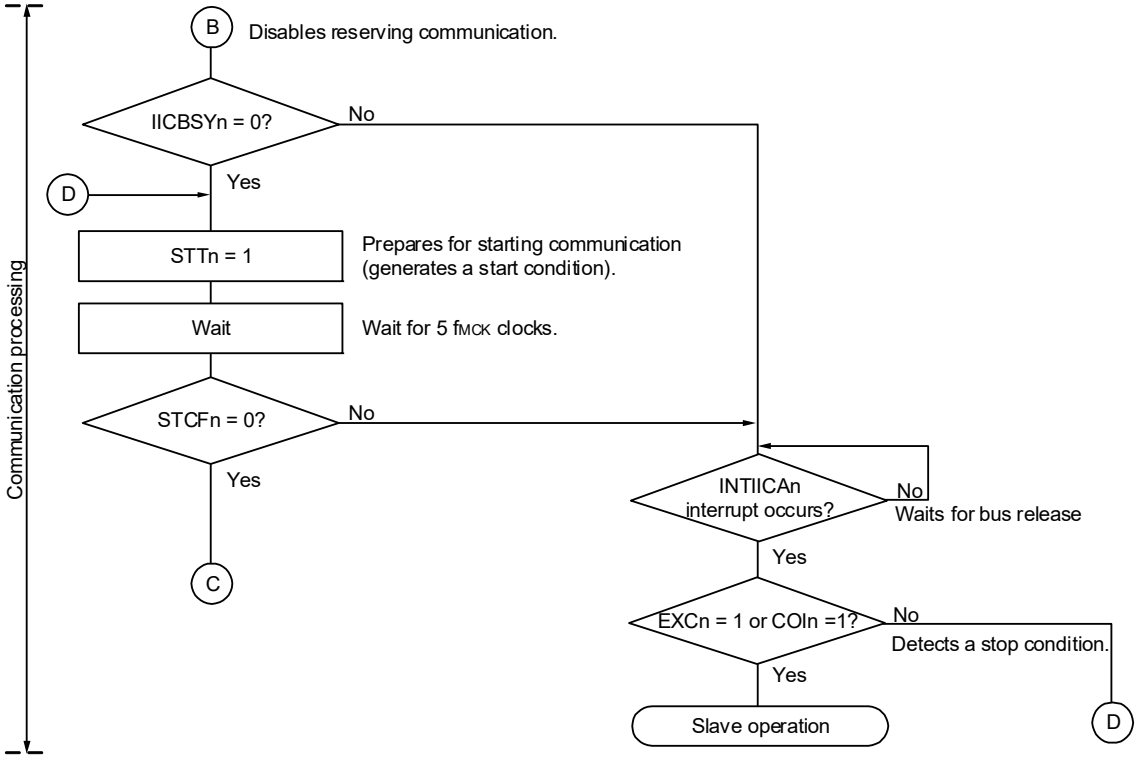

Remark1. IICWLn: IICA low-level width setting register n
IICWHn: IICA high-level width setting register n
t_F: SDAAn and SCLAn signal falling times
f_{MCK}: IICA operating clock frequency

Remark2. n = 0

Figure 20 - 38 Master Operation in Multi-Master System (3/3)

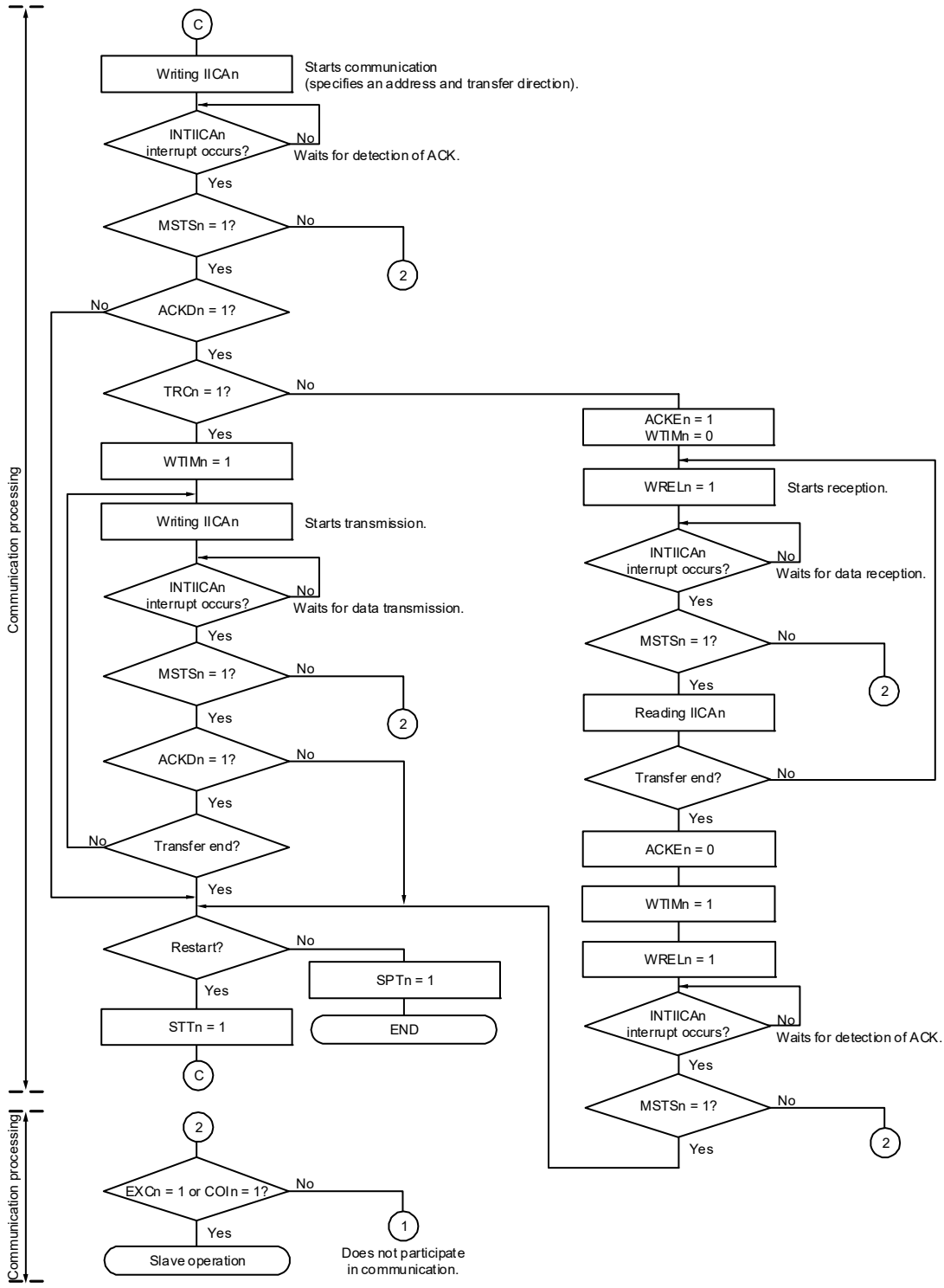

Remark 1. Conform to the specifications of the product that is communicating, with respect to the transmission and reception formats.

Remark 2. To use the device as a master in a multi-master system, read the MSTSn bit each time interrupt INTIICAn has occurred to check the arbitration result.

Remark 3. To use the device as a slave in a multi-master system, check the status by using the IICA status register n (IICSn) and IICA flag register n (IICFn) each time interrupt INTIICAn has occurred, and determine the processing to be performed next.

Remark 4. n = 0

(3) Slave operation

The processing procedure of the slave operation is as follows.

Basically, the slave operation is event-driven. Therefore, processing by the INTIICAn interrupt (processing that must substantially change the operation status such as detection of a stop condition during communication) is necessary.

In the following explanation, it is assumed that the extension code is not supported for data communication. It is also assumed that the INTIICAn interrupt servicing only performs status transition processing, and that actual data communication is performed by the main processing.

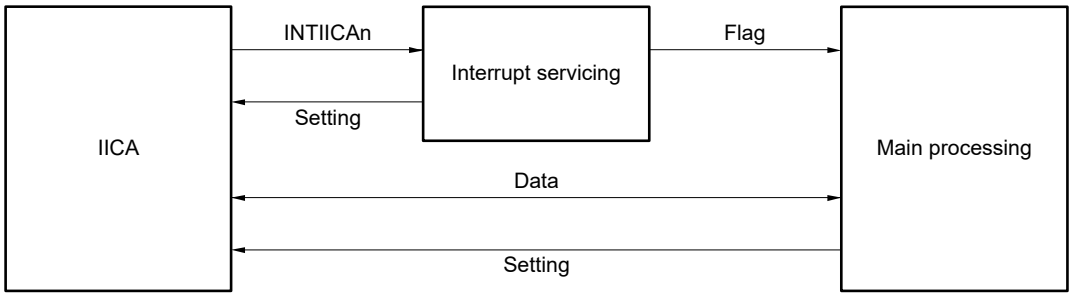

Therefore, data communication processing is performed by preparing the following three flags and passing them to the main processing instead of INTIICAn.

<1> Communication mode flag

This flag indicates the following two communication statuses.

•Clear mode: Status in which data communication is not performed

•Communication mode: Status in which data communication is performed (from valid address detection to stop condition detection, no detection of ACK from master, address mismatch)

<2> Ready flag

This flag indicates that data communication is enabled. Its function is the same as the INTIICAn interrupt for ordinary data communication. This flag is set by interrupt servicing and cleared by the main processing. Clear this flag by interrupt servicing when communication is started. However, the ready flag is not set by interrupt servicing when the first data is transmitted. Therefore, the first data is transmitted without the flag being cleared (an address match is interpreted as a request for the next data).

<3> Communication direction flag

This flag indicates the direction of communication. Its value is the same as the TRCn bit.

Remark n = 0

The main processing of the slave operation is explained next.

Start serial interface IICA and wait until communication is enabled. When communication is enabled, execute communication by using the communication mode flag and ready flag (processing of the stop condition and start condition is performed by an interrupt. Here, check the status by using the flags).

The transmission operation is repeated until the master no longer returns ACK. If ACK is not returned from the master, communication is completed.

For reception, the necessary amount of data is received. When communication is completed, ACK is not returned as the next data. After that, the master generates a stop condition or restart condition. Exit from the communication status occurs in this way.

Figure 20 - 39 Slave Operation Flowchart (1)

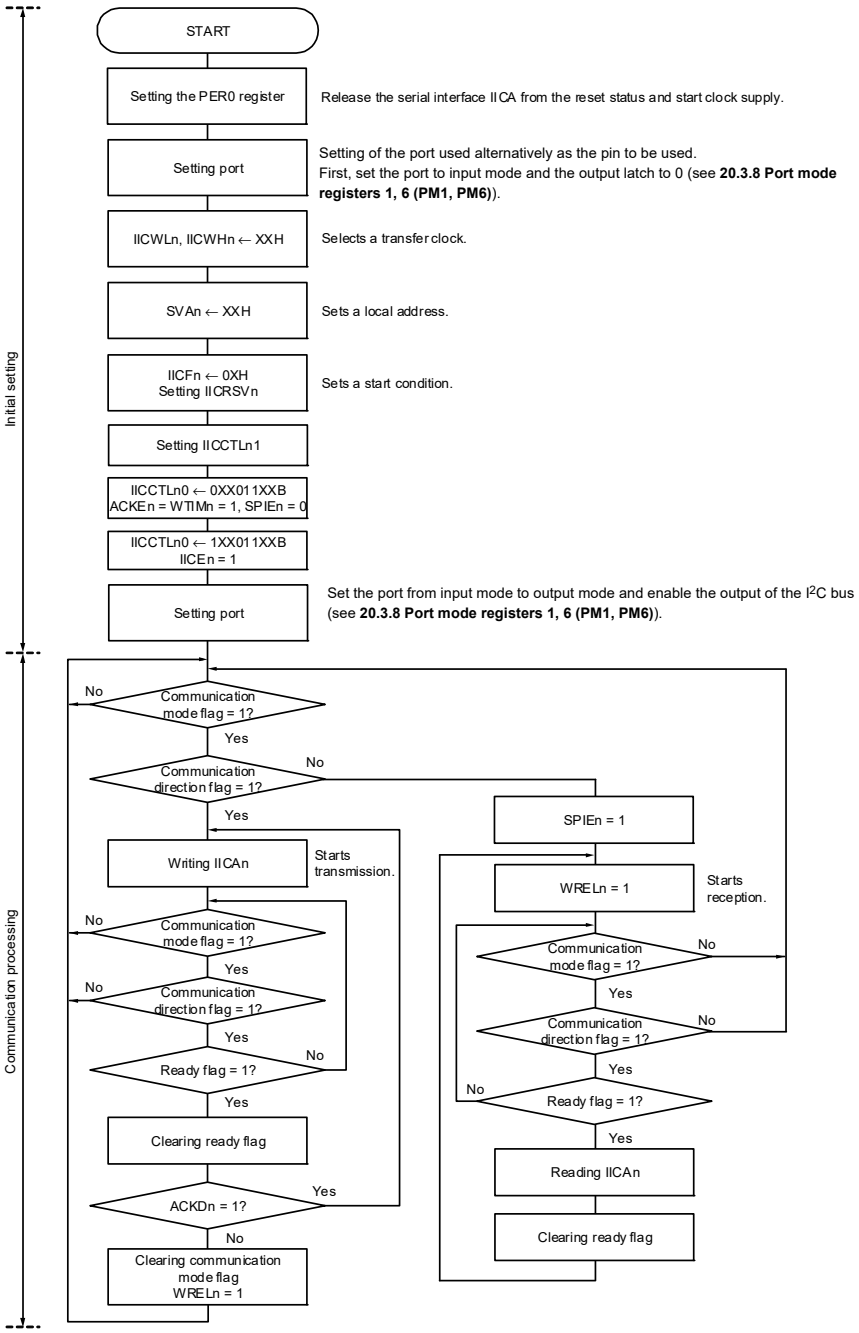

Remark1. Conform to the specifications of the product that is in communication, regarding the transmission and reception formats.
Remark2. n = 0

An example of the processing procedure of the slave with the INTIICAn interrupt is explained below (processing is performed assuming that no extension code is used). The INTIICAn interrupt checks the status, and the following operations are performed.

<1> Communication is stopped if the stop condition is issued.
<2> If the start condition is issued, the address is checked and communication is completed if the address does not match. If the address matches, the communication mode is set, wait is cancelled, and processing returns from the interrupt (the ready flag is cleared).
<3> For data transmit/receive, only the ready flag is set. Processing returns from the interrupt with the I^2C bus remaining in the wait state.

Remark <1> to <3> above correspond to <1> to <3> in Figure 20 - 40 Slave Operation Flowchart (2).

Figure 20 - 40 Slave Operation Flowchart (2)

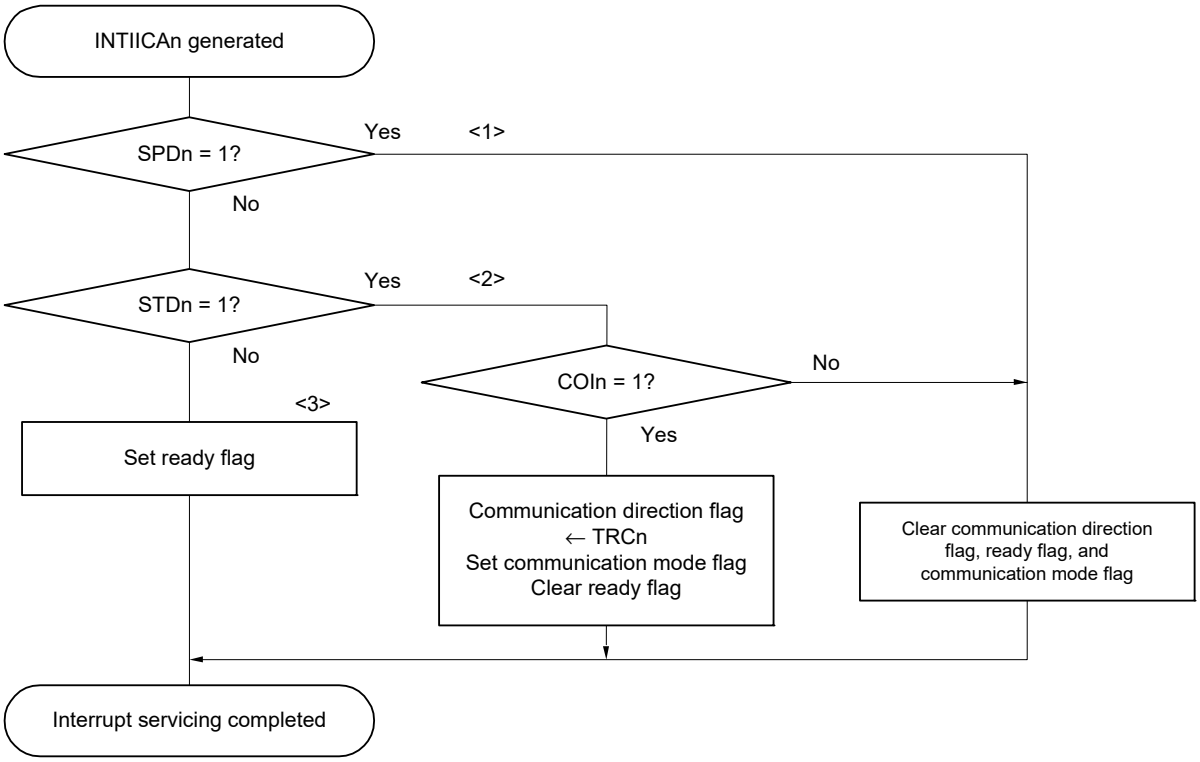

Remark n = 0

20.5.17 Timing of I²C interrupt request (INTIICAn) occurrence

The timing of transmitting or receiving data and generation of interrupt request signal INTIICAn, and the value of the IICA status register n (IICSn) when the INTIICAn signal is generated are shown below.

Remark 1. ST: Start condition
AD6 to AD0: Address
R/$\overline{W}$: Transfer direction specification
ACK: Acknowledge
D7 to D0: Data
SP: Stop condition

Remark 2. n = 0

(1) Master device operation

(a) Start ~ Address ~ Data ~ Data ~ Stop (transmission/reception)

(i) When WTIMn = 0

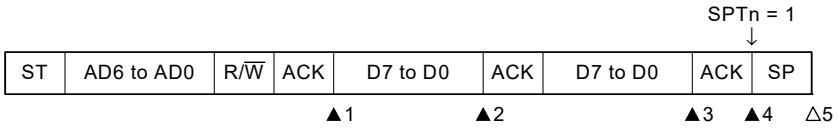

▲1: IICSn = 1000×110B

▲2: IICSn = 1000×000B

▲3: IICSn = 1000×000B (Sets the WTIMn bit to 1)[Note]

▲4: IICSn = 1000××00B (Sets the SPTn bit to 1)[Note]

△5: IICSn = 00000001B

Note To generate a stop condition, set the WTIMn bit to 1 and change the timing for generating the INTIICAn interrupt request signal.

Remark ▲: Always generated

△: Generated only when SPIEn = 1

×: Don't care

(ii) When WTIMn = 1

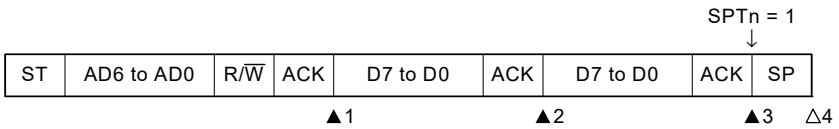

▲1: IICSn = 1000×110B

▲2: IICSn = 1000×100B

▲3: IICSn = 1000××00B (Sets the SPTn bit to 1)

△4: IICSn = 00000001B

Remark ▲: Always generated

△: Generated only when SPIEn = 1

×: Don't care

Remark n = 0

(b) Start ~ Address ~ Data ~ Start ~ Address ~ Data ~ Stop (restart)

(i) When WTIMn = 0

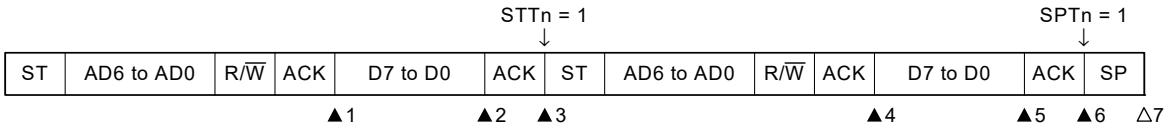

▲1: IICSn = 1000×110B

▲2: IICSn = 1000×000B (Sets the WTIMn bit to 1)Note 1

▲3: IICSn = 1000××00B (Clears the WTIMn bit to 0Note 2, sets the STTn bit to 1)

▲4: IICSn = 1000×110B

▲5: IICSn = 1000×000B (Sets the WTIMn bit to 1)Note 3

▲6: IICSn = 1000××00B (Sets the SPTn bit to 1)

△7: IICSn = 00000001B

Note 1. To generate a start condition, set the WTIMn bit to 1 and change the timing for generating the INTIICAn interrupt request signal.

Note 2. Clear the WTIMn bit to 0 to restore the original setting.

Note 3. To generate a stop condition, set the WTIMn bit to 1 and change the timing for generating the INTIICAn interrupt request signal.

Remark ▲: Always generated

△: Generated only when SPIEn = 1

×: Don't care

(ii) When WTIMn = 1

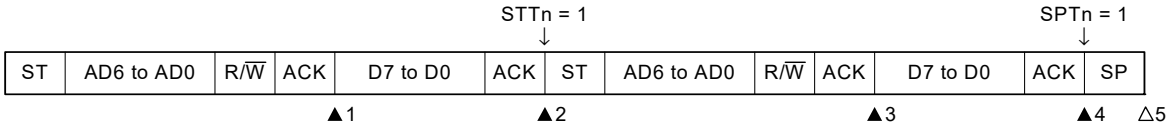

▲1: IICSn = 1000×110B

▲2: IICSn = 1000××00B (Sets the STTn bit to 1)

▲3: IICSn = 1000×110B

▲4: IICSn = 1000××00B (Sets the SPTn bit to 1)

△5: IICSn = 00000001B

Remark ▲: Always generated

△: Generated only when SPIEn = 1

×: Don't care

Remark n = 0

(c) Start ~ Code ~ Data ~ Data ~ Stop (extension code transmission)

(i) When WTIMn = 0

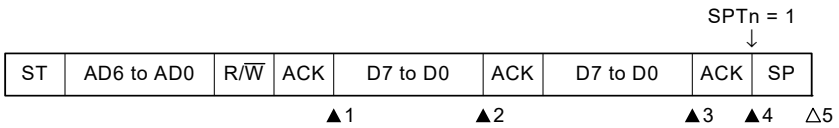

▲1: IICSn = 1010×110B

▲2: IICSn = 1010×000B

▲3: IICSn = 1010×000B (Sets the WTIMn bit to 1)[Note]

▲4: IICSn = 1010××00B (Sets the SPTn bit to 1)

△5: IICSn = 00000001B

Note To generate a stop condition, set the WTIMn bit to 1 and change the timing for generating the INTIICAn interrupt request signal.

Remark ▲: Always generated

△: Generated only when SPIEn = 1

×: Don't care

(ii) When WTIMn = 1

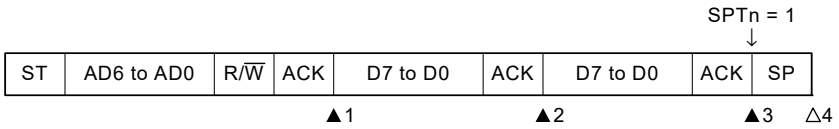

▲1: IICSn = 1010×110B

▲2: IICSn = 1010×100B

▲3: IICSn = 1010××00B (Sets the SPTn bit to 1)

△4: IICSn = 00001001B

Remark ▲: Always generated

△: Generated only when SPIEn = 1

×: Don't care

Remark n = 0

(2) Slave device operation (slave address data reception)

(a) Start ~ Address ~ Data ~ Data ~ Stop

(i) When WTIMn = 0

ST	AD6 to AD0	R/$\overline{W}$	ACK	D7 to D0	ACK	D7 to D0	ACK	SP
				▲1	▲2		▲3	△4

▲1: IICSn = 0001×110B

▲2: IICSn = 0001×000B

▲3: IICSn = 0001×000B

△4: IICSn = 00000001B

Remark ▲: Always generated

△: Generated only when SPIEn = 1

×: Don't care

(ii) When WTIMn = 1

ST	AD6 to AD0	R/$\overline{W}$	ACK	D7 to D0	ACK	D7 to D0	ACK	SP
				▲1		▲2	▲3	△4

▲1: IICSn = 0001×110B

▲2: IICSn = 0001×100B

▲3: IICSn = 0001××00B

△4: IICSn = 00000001B

Remark ▲: Always generated

△: Generated only when SPIEn = 1

×: Don't care

Remark n = 0

(b) Start ~ Address ~ Data ~ Start ~ Address ~ Data ~ Stop

(i) When WTIMn = 0 (after restart, matches with SVAn)

ST	AD6 to AD0	R/$\overline{W}$	ACK	D7 to D0	ACK	ST	AD6 to AD0	R/$\overline{W}$	ACK	D7 to D0	ACK	SP
				▲1	▲2					▲3	▲4	△5

▲1: IICSn = 0001×110B

▲2: IICSn = 0001×000B

▲3: IICSn = 0001×110B

▲4: IICSn = 0001×000B

△5: IICSn = 00000001B

Remark ▲: Always generated

△: Generated only when SPIEn = 1

×: Don't care

(ii) When WTIMn = 1 (after restart, matches with SVAn)

ST	AD6 to AD0	R/$\overline{W}$	ACK	D7 to D0	ACK	ST	AD6 to AD0	R/$\overline{W}$	ACK	D7 to D0	ACK	SP
				▲1		▲2				▲3	▲4	△5

▲1: IICSn = 0001×110B

▲2: IICSn = 0001××00B

▲3: IICSn = 0001×110B

▲4: IICSn = 0001××00B

△5: IICSn = 00000001B

Remark ▲: Always generated

△: Generated only when SPIEn = 1

×: Don't care

Remark n = 0

(c) Start ~ Address ~ Data ~ Start ~ Code ~ Data ~ Stop

(i) When WTIMn = 0 (after restart, does not match address (= extension code))

ST	AD6 to AD0	R/$\overline{W}$	ACK	D7 to D0	ACK	ST	AD6 to AD0	R/$\overline{W}$	ACK	D7 to D0	ACK	SP
				▲1	▲2				▲3		▲4	△5

▲1: IICSn = 0001×110B

▲2: IICSn = 0001×000B

▲3: IICSn = 0010×010B

▲4: IICSn = 0010×000B

△5: IICSn = 00000001B

Remark ▲: Always generated

△: Generated only when SPIEn = 1

×: Don't care

(ii) When WTIMn = 1 (after restart, does not match address (= extension code))

ST	AD6 to AD0	R/$\overline{W}$	ACK	D7 to D0	ACK	ST	AD6 to AD0	R/$\overline{W}$	ACK	D7 to D0	ACK	SP
				▲1		▲2			▲3	▲4	▲5	△6

▲1: IICSn = 0001×110B

▲2: IICSn = 0001××00B

▲3: IICSn = 0010×010B

▲4: IICSn = 0010×110B

▲5: IICSn = 0010××00B

△6: IICSn = 00000001B

Remark ▲: Always generated

△: Generated only when SPIEn = 1

×: Don't care

Remark n = 0

(d) Start ~ Address ~ Data ~ Start ~ Address ~ Data ~ Stop

(i) When WTIMn = 0 (after restart, does not match address (= not extension code))

ST	AD6 to AD0	R/$\overline{W}$	ACK	D7 to D0	ACK	ST	AD6 to AD0	R/$\overline{W}$	ACK	D7 to D0	ACK	SP
			▲1		▲2					▲3		△4

▲1: IICSn = 0001×110B

▲2: IICSn = 0001×000B

▲3: IICSn = 00000110B

△4: IICSn = 00000001B

Remark ▲: Always generated

△: Generated only when SPIEn = 1

×: Don't care

(ii) When WTIMn = 1 (after restart, does not match address (= not extension code))

ST	AD6 to AD0	R/$\overline{W}$	ACK	D7 to D0	ACK	ST	AD6 to AD0	R/$\overline{W}$	ACK	D7 to D0	ACK	SP
			▲1			▲2				▲3		△4

▲1: IICSn = 0001×110B

▲2: IICSn = 0001××00B

▲3: IICSn = 00000110B

△4: IICSn = 00000001B

Remark ▲: Always generated

△: Generated only when SPIEn = 1

×: Don't care

Remark n = 0

(3) Slave device operation (when receiving extension code)

The device is always participating in communication when it receives an extension code.

(a) Start ~ Code ~ Data ~ Data ~ Stop

(i) When WTIMn = 0

ST	AD6 to AD0	R/$\overline{W}$	ACK	D7 to D0	ACK	D7 to D0	ACK	SP
				▲1	▲2		▲3	△4

▲1: IICSn = 0010×010B

▲2: IICSn = 0010×000B

▲3: IICSn = 0010×000B

△4: IICSn = 00000001B

Remark ▲: Always generated

△: Generated only when SPIEn = 1

×: Don't care

(ii) When WTIMn = 1

ST	AD6 to AD0	R/$\overline{W}$	ACK	D7 to D0	ACK	D7 to D0	ACK	SP
			▲1	▲2		▲3	▲4	△5

▲1: IICSn = 0010×010B

▲2: IICSn = 0010×110B

▲3: IICSn = 0010×100B

▲4: IICSn = 0010××00B

△5: IICSn = 00000001B

Remark ▲: Always generated

△: Generated only when SPIEn = 1

×: Don't care

Remark n = 0

(b) Start ~ Code ~ Data ~ Start ~ Address ~ Data ~ Stop

(i) When WTIMn = 0 (after restart, matches SVAn)

ST	AD6 to AD0	R/$\overline{W}$	ACK	D7 to D0	ACK	ST	AD6 to AD0	R/$\overline{W}$	ACK	D7 to D0	ACK	SP
			▲1		▲2					▲3	▲4	△5

▲1: IICSn = 0010×010B

▲2: IICSn = 0010×000B

▲3: IICSn = 0001×110B

▲4: IICSn = 0001×000B

△5: IICSn = 00000001B

Remark ▲: Always generated

△: Generated only when SPIEn = 1

×: Don't care

(ii) When WTIMn = 1 (after restart, matches SVAn)

ST	AD6 to AD0	R/$\overline{W}$	ACK	D7 to D0	ACK	ST	AD6 to AD0	R/$\overline{W}$	ACK	D7 to D0	ACK	SP
			▲1	▲2		▲3				▲4	▲5	△6

▲1: IICSn = 0010×010B

▲2: IICSn = 0010×110B

▲3: IICSn = 0010××00B

▲4: IICSn = 0001×110B

▲5: IICSn = 0001××00B

△6: IICSn = 00000001B

Remark ▲: Always generated

△: Generated only when SPIEn = 1

×: Don't care

Remark n = 0

(c) Start ~ Code ~ Data ~ Start ~ Code ~ Data ~ Stop

(i) When WTIMn = 0 (after restart, extension code reception)

ST	AD6 to AD0	R/$\overline{W}$	ACK	D7 to D0	ACK	ST	AD6 to AD0	R/$\overline{W}$	ACK	D7 to D0	ACK	SP
			▲1		▲2				▲3		▲4	△5

▲1: IICSn = 0010×010B

▲2: IICSn = 0010×000B

▲3: IICSn = 0010×010B

▲4: IICSn = 0010×000B

△5: IICSn = 00000001B

Remark ▲: Always generated

△: Generated only when SPIEn = 1

×: Don't care

(ii) When WTIMn = 1 (after restart, extension code reception)

ST	AD6 to AD0	R/$\overline{W}$	ACK	D7 to D0	ACK	ST	AD6 to AD0	R/$\overline{W}$	ACK	D7 to D0	ACK	SP
			▲1	▲2		▲3			▲4	▲5	▲6	△7

▲1: IICSn = 0010×010B

▲2: IICSn = 0010×110B

▲3: IICSn = 0010××00B

▲4: IICSn = 0010×010B

▲5: IICSn = 0010×110B

▲6: IICSn = 0010××00B

△7: IICSn = 00000001B

Remark ▲: Always generated

△: Generated only when SPIEn = 1

×: Don't care

Remark n = 0

(d) Start ~ Code ~ Data ~ Start ~ Address ~ Data ~ Stop

(i) When WTIMn = 0 (after restart, does not match address (= not extension code))

ST	AD6 to AD0	R/$\overline{W}$	ACK	D7 to D0	ACK	ST	AD6 to AD0	R/$\overline{W}$	ACK	D7 to D0	ACK	SP
			▲1		▲2					▲3		△4

▲1: IICSn = 0010 × 010B

▲2: IICSn = 0010 × 000B

▲3: IICSn = 00000 × 10B

△4: IICSn = 00000001B

Remark ▲: Always generated

△: Generated only when SPIEn = 1

×: Don't care

(ii) When WTIMn = 1 (after restart, does not match address (= not extension code))

ST	AD6 to AD0	R/$\overline{W}$	ACK	D7 to D0	ACK	ST	AD6 to AD0	R/$\overline{W}$	ACK	D7 to D0	ACK	SP
			▲1	▲2		▲3				▲4		△5

▲1: IICSn = 0010 × 010B

▲2: IICSn = 0010 × 110B

▲3: IICSn = 0010 × × 00B

▲4: IICSn = 00000 × 10B

△5: IICSn = 00000001B

Remark ▲: Always generated

△: Generated only when SPIEn = 1

×: Don't care

Remark n = 0

(4) Operation without communication

(a) Start ~ Code ~ Data ~ Data ~ Stop

ST	AD6 to AD0	R/$\overline{W}$	ACK	D7 to D0	ACK	D7 to D0	ACK	SP
								△1

△1: IICSn = 00000001B

Remark △: Generated only when SPIEn = 1

(5) Arbitration loss operation (operation as slave after arbitration loss)
When the device is used as a master in a multi-master system, read the MSTSn bit each time interrupt request signal INTIICAn has occurred to check the arbitration result.

(a) When arbitration loss occurs during transmission of slave address data

(i) When WTIMn = 0

ST	AD6 to AD0	R/$\overline{W}$	ACK	D7 to D0	ACK	D7 to D0	ACK	SP
				▲1	▲2		▲3	△4

▲1: IICSn = 0101×110B

▲2: IICSn = 0001×000B

▲3: IICSn = 0001×000B

△4: IICSn = 00000001B

Remark ▲: Always generated

△: Generated only when SPIEn = 1

×: Don't care

Remark n = 0

(ii) When WTIMn = 1

ST	AD6 to AD0	R/$\overline{W}$	ACK	D7 to D0	ACK	D7 to D0	ACK	SP
			▲1		▲2		▲3	△4

▲1: IICSn = 0101×110B

▲2: IICSn = 0001×100B

▲3: IICSn = 0001××00B

△4: IICSn = 00000001B

Remark ▲: Always generated

△: Generated only when SPIEn = 1

×: Don't care

(b) When arbitration loss occurs during transmission of extension code

(i) When WTIMn = 0

ST	AD6 to AD0	R/$\overline{W}$	ACK	D7 to D0	ACK	D7 to D0	ACK	SP
			▲1		▲2		▲3	△4

▲1: IICSn = 0110×010B

▲2: IICSn = 0010×000B

▲3: IICSn = 0010×000B

△4: IICSn = 00000001B

Remark ▲: Always generated

△: Generated only when SPIEn = 1

×: Don't care

Remark n = 0

(ii) When WTIMn = 1

ST	AD6 to AD0	R/$\overline{W}$	ACK	D7 to D0	ACK	D7 to D0	ACK	SP
			▲1	▲2		▲3	▲4	△5

▲1: IICSn = 0110×010B

▲2: IICSn = 0010×110B

▲3: IICSn = 0010×100B

▲4: IICSn = 0010××00B

△5: IICSn = 00000001B

Remark ▲: Always generated

△: Generated only when SPIEn = 1

×: Don't care

(6) Operation when arbitration loss occurs (no communication after arbitration loss)

When the device is used as a master in a multi-master system, read the MSTSn bit each time interrupt request signal INTIICAn has occurred to check the arbitration result.

(a) When arbitration loss occurs during transmission of slave address data (when WTIMn = 1)

ST	AD6 to AD0	R/$\overline{W}$	ACK	D7 to D0	ACK	D7 to D0	ACK	SP
				▲1				△2

▲1: IICSn = 01000110B

△2: IICSn = 00000001B

Remark ▲: Always generated

△: Generated only when SPIEn = 1

Remark n = 0

(b) When arbitration loss occurs during transmission of extension code

ST	AD6 to AD0	R/$\overline{W}$	ACK	D7 to D0	ACK	D7 to D0	ACK	SP
			▲1					△2

▲1: IICSn = 0110×010B

Sets LRELn = 1 by software

△2: IICSn = 00000001B

Remark ▲: Always generated

△: Generated only when SPIEn = 1

× : Don't care

(c) When arbitration loss occurs during transmission of data

(i) When WTIMn = 0

ST	AD6 to AD0	R/$\overline{W}$	ACK	D7 to D0	ACK	D7 to D0	ACK	SP
				▲1	▲2			△3

▲1: IICSn = 10001110B

▲2: IICSn = 01000000B

△3: IICSn = 00000001B

Remark ▲: Always generated

△: Generated only when SPIEn = 1

Remark n = 0

(ii) When WTIMn = 1

ST	AD6 to AD0	R/$\overline{W}$	ACK	D7 to D0	ACK	D7 to D0	ACK	SP
				▲1		▲2		△3

▲1: IICSn = 10001110B

▲2: IICSn = 01000100B

△3: IICSn = 00000001B

Remark ▲: Always generated

△: Generated only when SPIEn = 1

(d) When loss occurs due to restart condition during data transfer

(i) Not extension code (Example: unmatches with SVAn)

ST	AD6 to AD0	R/$\overline{W}$	ACK	D7 to Dm	ST	AD6 to AD0	R/$\overline{W}$	ACK	D7 to D0	ACK	SP
				▲1					▲2		△3

▲1: IICSn = 1000×110B

▲2: IICSn = 01000110B

△3: IICSn = 00000001B

Remark ▲: Always generated

△: Generated only when SPIEn = 1

×: Don't care

m = 6 to 0

Remark n = 0

(ii) Extension code

ST	AD6 to AD0	R/$\overline{W}$	ACK	D7 to Dm	ST	AD6 to AD0	R/$\overline{W}$	ACK	D7 to D0	ACK	SP
				▲1				▲2			△3

▲1: IICSn = 1000×110B

▲2: IICSn = 01100010B

Sets LRELn = 1 by software

△3: IICSn = 00000001B

Remark ▲: Always generated

△: Generated only when SPIEn = 1

×: Don't care

m = 6 to 0

(e) When loss occurs due to stop condition during data transfer

ST	AD6 to AD0	R/$\overline{W}$	ACK	D7 to Dm	SP
				▲1	△2

▲1: IICSn = 10000110B

△2: IICSn = 01000001B

Remark ▲: Always generated

△: Generated only when SPIEn = 1

×: Don't care

m = 6 to 0

Remark n = 0

(f) When arbitration loss occurs due to low-level data when attempting to generate a restart condition

(i) When WTIMn = 0

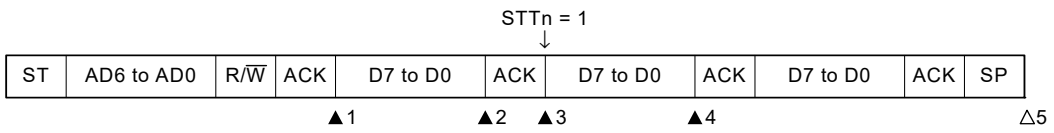

▲1: IICSn = 1000×110B

▲2: IICSn = 1000×000B (Sets the WTIMn bit to 1)

▲3: IICSn = 1000×100B (Clears the WTIMn bit to 0)

▲4: IICSn = 01000000B

△5: IICSn = 00000001B

Remark ▲: Always generated

△: Generated only when SPIEn = 1

×: Don't care

(ii) When WTIMn = 1

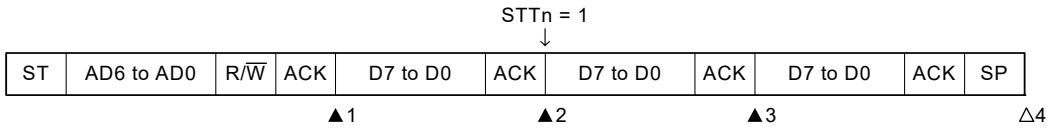

▲1: IICSn = 1000×110B

▲2: IICSn = 1000×100B (Sets the STTn bit to 1)

▲3: IICSn = 01000100B

△4: IICSn = 00000001B

Remark ▲: Always generated

△: Generated only when SPIEn = 1

×: Don't care

Remark n = 0

(g) When arbitration loss occurs due to a stop condition when attempting to generate a restart condition

(i) When WTIMn = 0

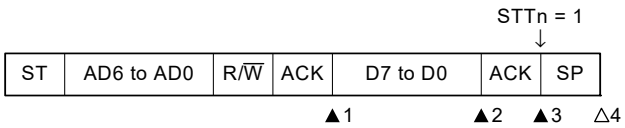

▲1: IICSn = 1000×110B

▲2: IICSn = 1000×000B (Sets the WTIMn bit to 1)

▲3: IICSn = 1000××00B (Sets the STTn bit to 1)

△4: IICSn = 01000001B

Remark ▲: Always generated

△: Generated only when SPIEn = 1

×: Don't care

(ii) When WTIMn = 1

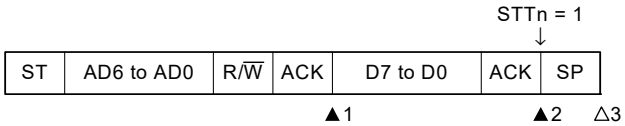

▲1: IICSn = 1000×110B

▲2: IICSn = 1000××00B (Sets the STTn bit to 1)

△3: IICSn = 01000001B

Remark ▲: Always generated

△: Generated only when SPIEn = 1

×: Don't care

Remark n = 0

(h) When arbitration loss occurs due to low-level data when attempting to generate a stop condition

(i) When WTIMn = 0

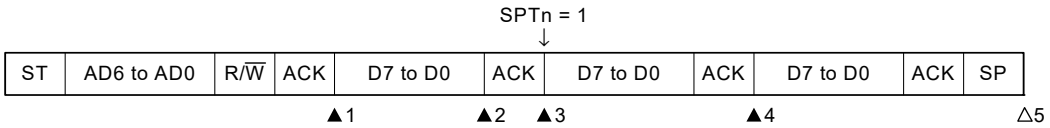

▲1: IICSn = 1000×110B

▲2: IICSn = 1000×000B (Sets the WTIMn bit to 1)

▲3: IICSn = 1000×100B (Clears the WTIMn bit to 0)

▲4: IICSn = 01000100B

△5: IICSn = 00000001B

Remark ▲: Always generated

△: Generated only when SPIEn = 1

×: Don't care

(ii) When WTIMn = 1

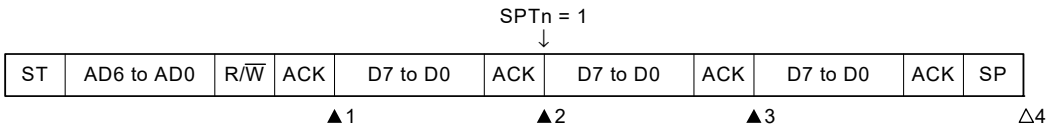

▲1: IICSn = 1000×110B

▲2: IICSn = 1000×100B (Sets the SPTn bit to 1)

▲3: IICSn = 01000100B

△4: IICSn = 00000001B

Remark ▲: Always generated

△: Generated only when SPIEn = 1

×: Don't care

Remark n = 0

20.6 Timing Charts

When using the I^{2}C bus mode, the master device outputs an address via the serial bus to select one of several slave devices as its communication partner.

After outputting the slave address, the master device transmits the TRCn bit (bit 3 of the IICA status register n (IICSn)), which specifies the data transfer direction, and then starts serial communication with the slave device.

Figures 20 - 41 to 20 - 47 show timing charts of the data communication.

The IICA shift register n (IICAn)'s shift operation is synchronized with the falling edge of the serial clock (SCLAn). The transmit data is transferred to the SO latch and is output (MSB first) via the SDAAn pin.

Data input via the SDAAn pin is captured into IICAn at the rising edge of SCLAn.

Remark n = 0

Figure 20 - 41 Example of Master to Slave Communication
(When 9-Clock Clock Stretch Is Selected for Master, 9-Clock Clock Stretch Is Selected for Slave) (1/4)

(1) Start condition ~ address ~ data

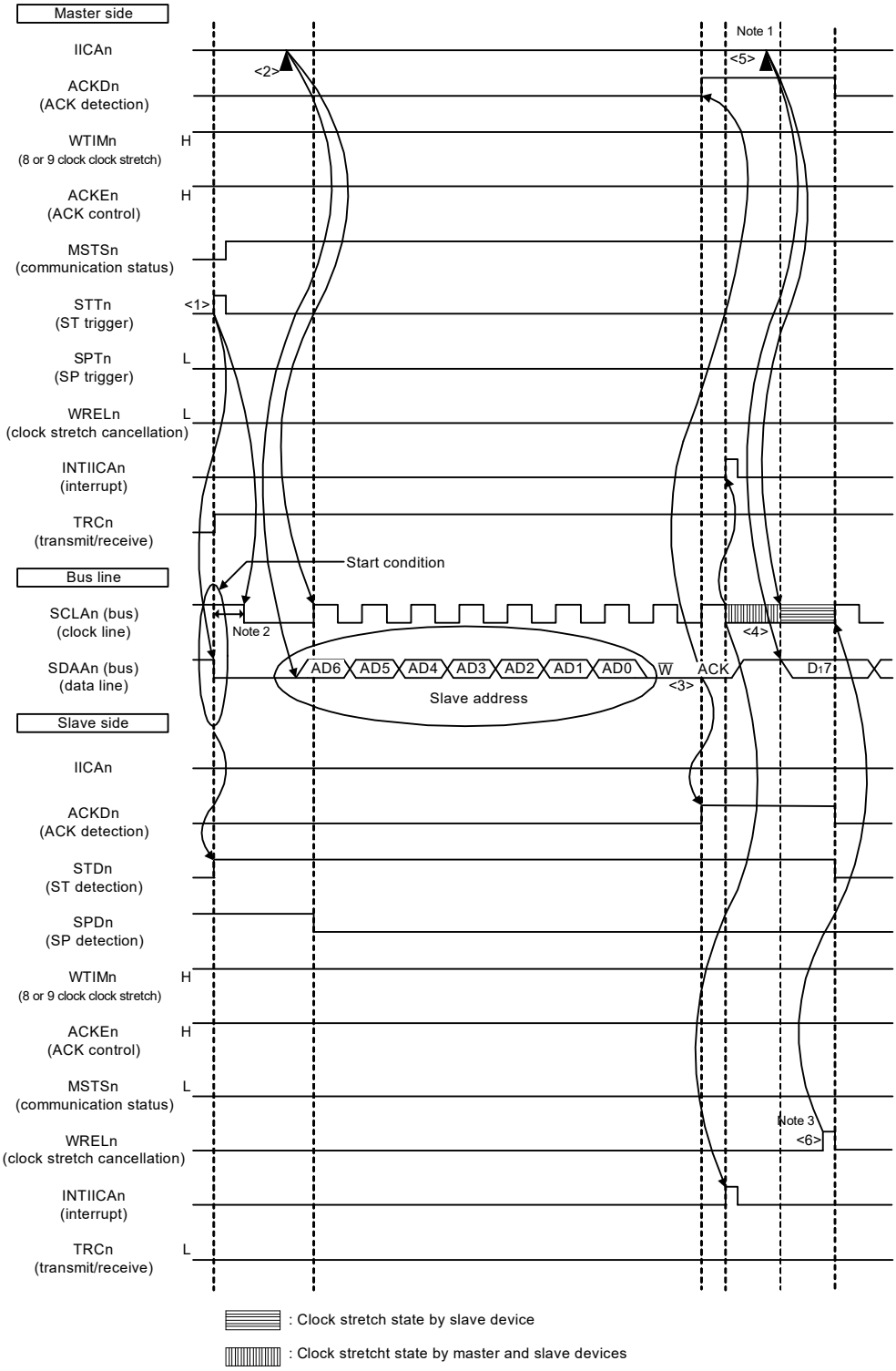

Note 1. Write data to IICAn, not setting the WRELn bit, in order to cancel a clock stretch state during transmission by a master device.

Note 2. Make sure that the time between the fall of the SDAAn pin signal and the fall of the SCLAn pin signal is at least 4.0 μs when specifying standard mode and at least 0.6 μs when specifying fast mode.

Note 3. For releasing clock stretch state during reception of a slave device, write “FFH” to IICAn or set the WRELn bit.

Remark n = 0

The meanings of <1> to <6> in (1) Start condition ~ address ~ data in Figure 20 - 41 are explained below.

<1> The start condition trigger is set by the master device (STTn = 1) and a start condition (i.e. SCLAn = 1 changes SDAAn from 1 to 0) is generated once the bus data line goes low (SDAAn). When the start condition is subsequently detected, the master device enters the master device communication status (MSTSn = 1). The master device is ready to communicate once the bus clock line goes low (SCLAn = 0) after the hold time has elapsed.

<2> The master device writes the address + W (transmission) to the IICA shift register n (IICAn) and transmits the slave address.

<3> In the slave device if the address received matches the address (SVAn value) of a slave device Note, that slave device sends an ACK by hardware to the master device. The ACK is detected by the master device (ACKDn = 1) at the rising edge of the 9th clock.

<4> The master device issues an interrupt (INTIICAn: end of address transmission) at the falling edge of the 9th clock. The slave device whose address matched the transmitted slave address sets a clock stretch status (SCLAn = 0) and issues an interrupt (INTIICAn: address match)Note.

<5> The master device writes the data to transmit to the IICAn register and releases the clock stretch status that it set by the master device.

<6> If the slave device releases the clock stretch status (WRELn = 1), the master device starts transferring data to the slave device.

Note If the transmitted address does not match the address of the slave device, the slave device does not return an ACK to the master device (NACK: SDAAn = 1). The slave device also does not issue the INTIICAn interrupt (address match) and does not set a clock stretch status. The master device, however, issues the INTIICAn interrupt (end of address transmission) regardless of whether it receives an ACK or NACK.

Remark 1. <1> to <15> in Figures 20 - 41 to 20 - 43 represent the entire procedure for communicating data using the I^2C bus. Figure 20 - 41 (1) Start condition ~ address ~ data shows the processing from <1> to <6>, Figure 20 - 42 (2) Address ~ data ~ data shows the processing from <3> to <10>, and Figure 20 - 43 (3) Data ~ data ~ stop condition shows the processing from <7> to <15>.

Remark 2. n = 0

Figure 20 - 42 Example of Master to Slave Communication
(When 9-Clock Clock Stretch Is Selected for Master, 9-Clock Clock Stretch Is Selected for Slave) (2/4)

(2) Address ~ data ~ data

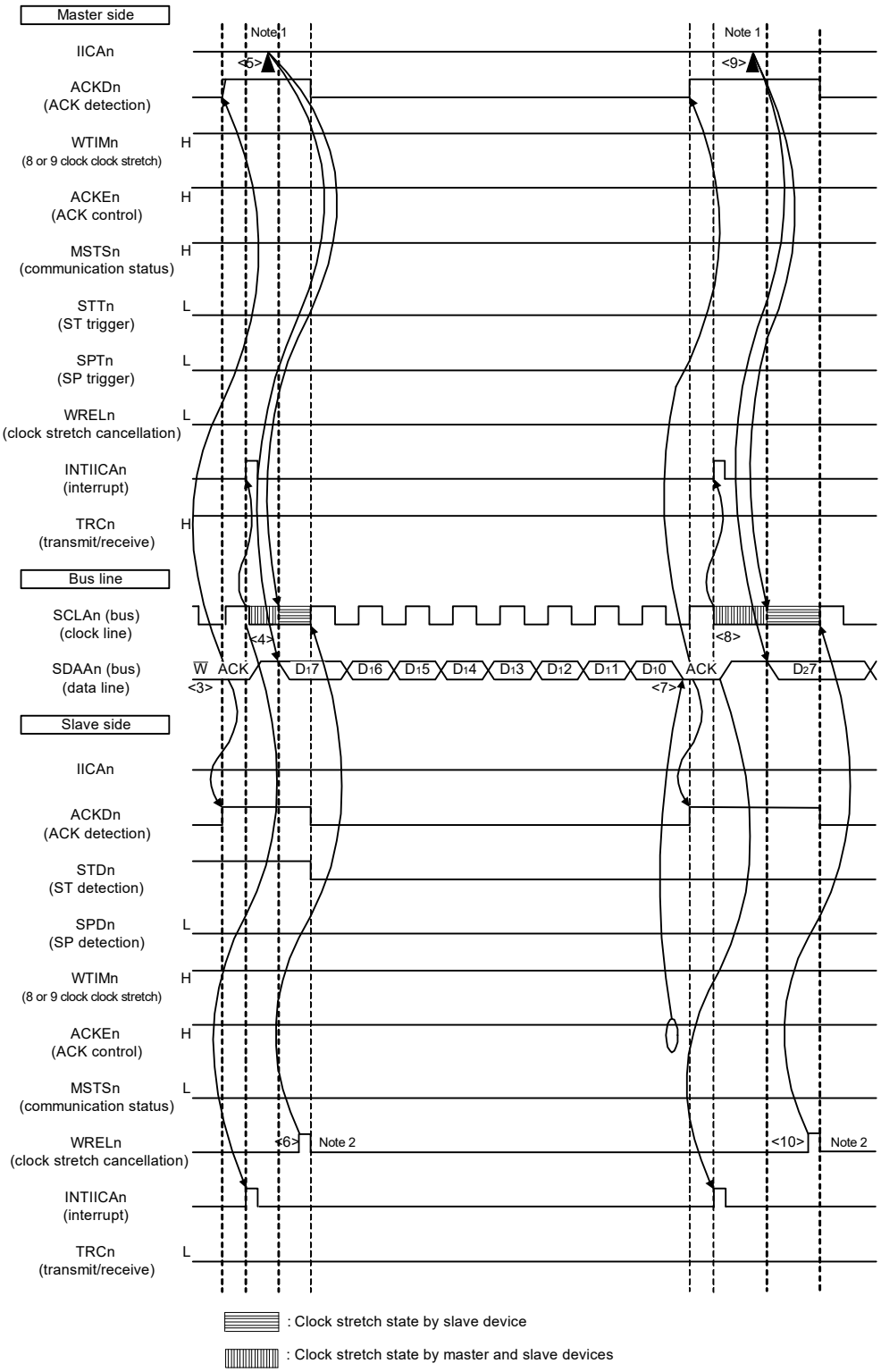

Note 1. Write data to IICAn, not setting the WRELn bit, in order to cancel a clock stretch state during transmission by a master device.

Note 2. For releasing clock stretch state during reception of a slave device, write “FFH” to IICAn or set the WRELn bit.

Remark n = 0

The meanings of <3> to <10> in (2) Address ~ data ~ data in Figure 20 - 42 are explained below.

<3> In the slave device if the address received matches the address (SVAn value) of a slave device Note, that slave device sends an ACK by hardware to the master device. The ACK is detected by the master device (ACKDn = 1) at the rising edge of the 9th clock.

<4> The master device issues an interrupt (INTIICAn: end of address transmission) at the falling edge of the 9th clock. The slave device whose address matched the transmitted slave address sets a clock stretch status (SCLAn = 0) and issues an interrupt (INTIICAn: address match)Note.

<5> The master device writes the data to transmit to the IICA shift register n (IICAn) and releases the clock stretch status that it set by the master device.

<6> If the slave device releases the clock stretch status (WRELn = 1), the master device starts transferring data to the slave device.

<7> After data transfer is completed, because of ACKEn = 1, the slave device sends an ACK by hardware to the master device. The ACK is detected by the master device (ACKDn = 1) at the rising edge of the 9th clock.

<8> The master device and slave device set a clock stretch status (SCLAn = 0) at the falling edge of the 9th clock, and both the master device and slave device issue an interrupt (INTIICAn: end of transfer).

<9> The master device writes the data to transmit to the IICAn register and releases the clock stretch status that it set by the master device.

<10>The slave device reads the received data and releases the clock stretch status (WRELn = 1). The master device then starts transferring data to the slave device.

Note If the transmitted address does not match the address of the slave device, the slave device does not return an ACK to the master device (NACK: SDAAn = 1). The slave device also does not issue the INTIICAn interrupt (address match) and does not set a clock stretch status. The master device, however, issues the INTIICAn interrupt (end of address transmission) regardless of whether it receives an ACK or NACK.

Remark 1. <1> to <15> in Figures 20 - 41 to 20 - 43 represent the entire procedure for communicating data using the I^2C bus. Figure 20 - 41 (1) Start condition ~ address ~ data shows the processing from <1> to <6>, Figure 20 - 42 (2) Address ~ data ~ data shows the processing from <3> to <10>, and Figure 20 - 43 (3) Data ~ data ~ stop condition shows the processing from <7> to <15>.

Remark 2. n = 0

Figure 20 - 43 Example of Master to Slave Communication
(When 9-Clock Clock Stretch Is Selected for Master, 9-Clock Clock Stretch Is Selected for Slave) (3/4)

(3) Data ~ data ~ stop condition

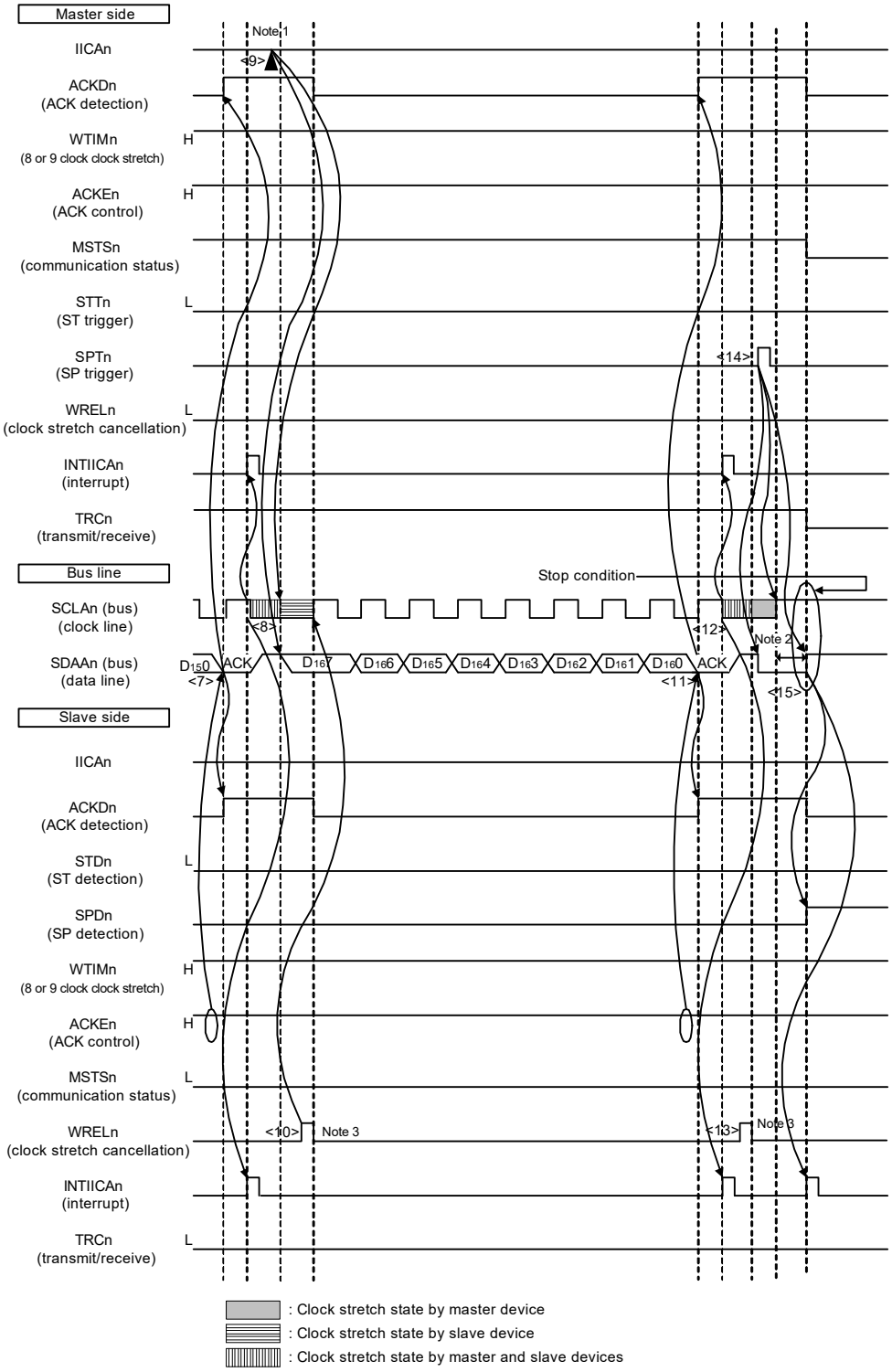

Note 1. Write data to IICAn, not setting the WRELn bit, in order to cancel a clock stretch state during transmission by a master device.

Note 2. Make sure that the time between the rise of the SCLAn pin signal and the generation of the stop condition after a stop condition has been issued is at least 4.0 μs when specifying standard mode and at least 0.6 μs when specifying fast mode.

Note 3. For releasing clock stretch state during reception of a slave device, write “FFH” to IICAn or set the WRELn bit.

Remark n = 0

The meanings of <7> to <15> in (3) Data ~ data ~ stop condition in Figure 20 - 43 are explained below.

<7> After data transfer is completed, because of ACKEn = 1, the slave device sends an ACK by hardware to the master device. The ACK is detected by the master device (ACKDn = 1) at the rising edge of the 9th clock.

<8> The master device and slave device set a clock stretch status (SCLAn = 0) at the falling edge of the 9th clock, and both the master device and slave device issue an interrupt (INTIICAn: end of transfer).

<9> The master device writes the data to transmit to the IICA shift register n (IICAn) and releases the clock stretch status that it set by the master device.

<10>The slave device reads the received data and releases the clock stretch status (WRELn = 1). The master device then starts transferring data to the slave device.

<11>When data transfer is complete, the slave device (ACKEn =1) sends an ACK by hardware to the master device. The ACK is detected by the master device (ACKDn = 1) at the rising edge of the 9th clock.

<12>The master device and slave device set a clock stretch status (SCLAn = 0) at the falling edge of the 9th clock, and both the master device and slave device issue an interrupt (INTIICAn: end of transfer).

<13>The slave device reads the received data and releases the clock stretch status (WRELn = 1).

<14> By the master device setting a stop condition trigger (SPTn = 1), the bus data line is cleared (SDAAn = 0) and the bus clock line is set (SCLAn = 1). After the stop condition setup time has elapsed, by setting the bus data line (SDAAn = 1), the stop condition is then generated (i.e. SCLAn =1 changes SDAAn from 0 to 1).

<15> When a stop condition is generated, the slave device detects the stop condition and issues an interrupt (INTIICAn: stop condition).

Remark 1. <1> to <15> in Figures 20 - 41 to 20 - 43 represent the entire procedure for communicating data using the I^2C bus. Figure 20 - 41 (1) Start condition ~ address ~ data shows the processing from <1> to <6>, Figure 20 - 42 (2) Address ~ data ~ data shows the processing from <3> to <10>, and Figure 20 - 43 (3) Data ~ data ~ stop condition shows the processing from <7> to <15>.

Remark 2. n = 0

Figure 20 - 44 Example of Master to Slave Communication
(When 9-Clock Clock Stretch Is Selected for Master, 9-Clock Clock Stretch Is Selected for Slave) (4/4)

(4) Data ~ restart condition ~ address

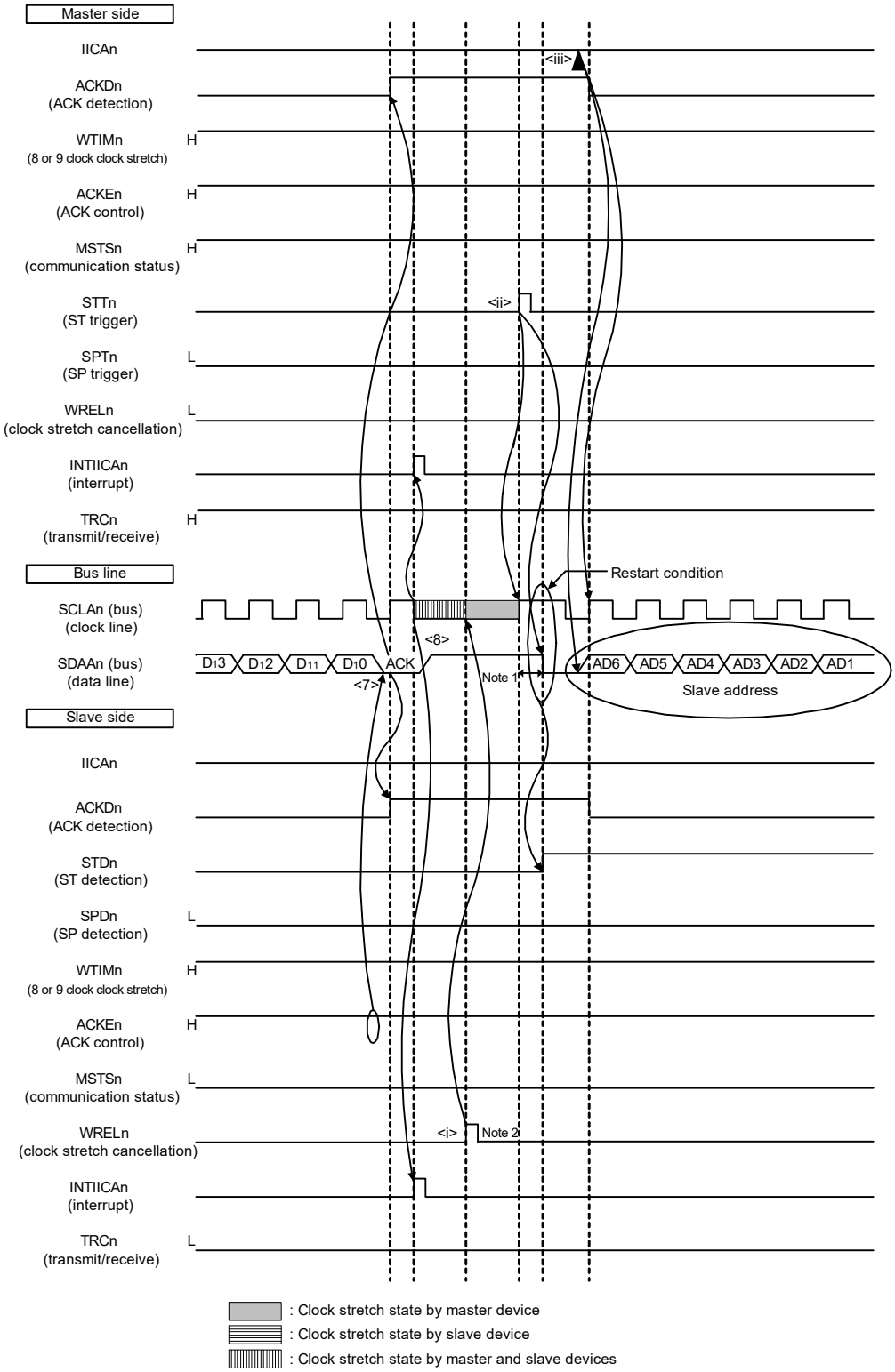

Note 1. Make sure that the time between the rise of the SCLAn pin signal and the generation of the start condition after a restart condition has been issued is at least 4.7 μs when specifying standard mode and at least 0.6 μs when specifying fast mode.

Note 2. For releasing clock stretch state during reception of a slave device, write “FFH” to IICAn or set the WRELn bit.

Remark n = 0

The following describes the operations in Figure 20 - 44 (4) Data ~ restart condition ~ address. After the operations in steps <7> and <8>, the operations in steps <i> to <iii> are performed. These steps return the processing to step <iii>, the data transmission step.

<7> After data transfer is completed, because of ACKEn = 1, the slave device sends an ACK by hardware to the master device. The ACK is detected by the master device (ACKDn = 1) at the rising edge of the 9th clock.

<8> The master device and slave device set a clock stretch status (SCLAn = 0) at the falling edge of the 9th clock, and both the master device and slave device issue an interrupt (INTIICAn: end of transfer).

<i> The slave device reads the received data and releases the clock stretch status (WRELn = 1).

<ii> The start condition trigger is set again by the master device (STTn = 1) and a start condition (i.e. SCLAn =1 changes SDAAn from 1 to 0) is generated once the bus clock line goes high (SCLAn = 1) and the bus data line goes low (SDAAn = 0) after the restart condition setup time has elapsed. When the start condition is subsequently detected, the master device is ready to communicate once the bus clock line goes low (SCLAn = 0) after the hold time has elapsed.

<iii> The master device writing the address + R/W (transmission) to the IICA shift register (IICAn) enables the slave address to be transmitted.

Remark n = 0

Figure 20 - 45 Example of Slave to Master Communication
(When 8-Clock Clock Stretch Is Selected for Master, 9-Clock Clock Stretch Is Selected for Slave) (1/3)

(1) Start condition ~ address ~ data

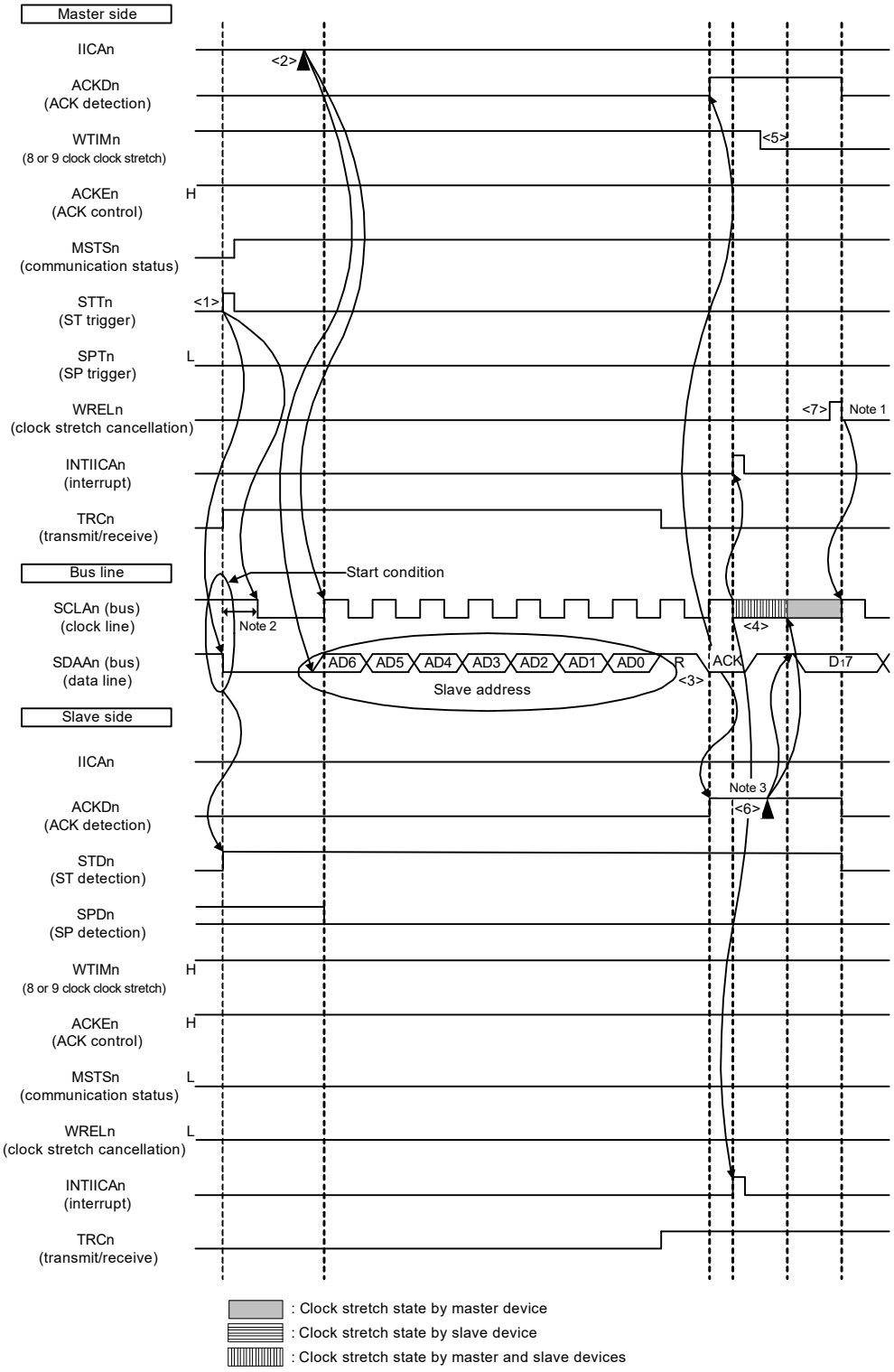

Note 1. For releasing clock stretch state during reception of a master device, write “FFH” to IICAn or set the WRELn bit.
Note 2. Make sure that the time between the fall of the SDAAn pin signal and the fall of the SCLAn pin signal is at least 4.0 μs when specifying standard mode and at least 0.6 μs when specifying fast mode.
Note 3. Write data to IICAn, not setting the WRELn bit, in order to cancel a clock stretch state during transmission by a slave device.
Remark n = 0

The meanings of <1> to <7> in (1) Start condition ~ address ~ data in Figure 20 - 45 are explained below.

<1> The start condition trigger is set by the master device (STTn = 1) and a start condition (i.e. SCLAn =1 changes SDAAn from 1 to 0) is generated once the bus data line goes low (SDAAn). When the start condition is subsequently detected, the master device enters the master device communication status (MSTSn = 1). The master device is ready to communicate once the bus clock line goes low (SCLAn = 0) after the hold time has elapsed.

<2> The master device writes the address + R (reception) to the IICA shift register n (IICAn) and transmits the slave address.

<3> In the slave device if the address received matches the address (SVAn value) of a slave device Note, that slave device sends an ACK by hardware to the master device. The ACK is detected by the master device (ACKDn = 1) at the rising edge of the 9th clock.

<4> The master device issues an interrupt (INTIICAn: end of address transmission) at the falling edge of the 9th clock. The slave device whose address matched the transmitted slave address sets a clock stretch status (SCLAn = 0) and issues an interrupt (INTIICAn: address match)Note.

<5> The timing at which the master device sets the clock stretch status changes to the 8th clock (WTIMn = 0).

<6> The slave device writes the data to transmit to the IICAn register and releases the clock stretch status that it set by the slave device.

<7> The master device releases the clock stretch status (WRELn = 1) and starts transferring data from the slave device to the master device.

Note If the transmitted address does not match the address of the slave device, the slave device does not return an ACK to the master device (NACK: SDAAn = 1). The slave device also does not issue the INTIICAn interrupt (address match) and does not set a clock stretch status. The master device, however, issues the INTIICAn interrupt (end of address transmission) regardless of whether it receives an ACK or NACK.

Remark 1. <1> to <19> in Figures 20 - 45 to 20 - 47 represent the entire procedure for communicating data using the I^2C bus. Figure 20 - 45 (1) Start condition ~ address ~ data shows the processing from <1> to <7>, Figure 20 - 46 (2) Address ~ data ~ data shows the processing from <3> to <12>, and Figure 20 - 47 (3) Data ~ data ~ stop condition shows the processing from <8> to <19>.

Remark 2. n = 0

Figure 20 - 46 Example of Slave to Master Communication
(When 8-Clock Clock Stretch Is Selected for Master, 9-Clock Clock Stretch Is Selected for Slave) (2/3)

(2) Address ~ data ~ data

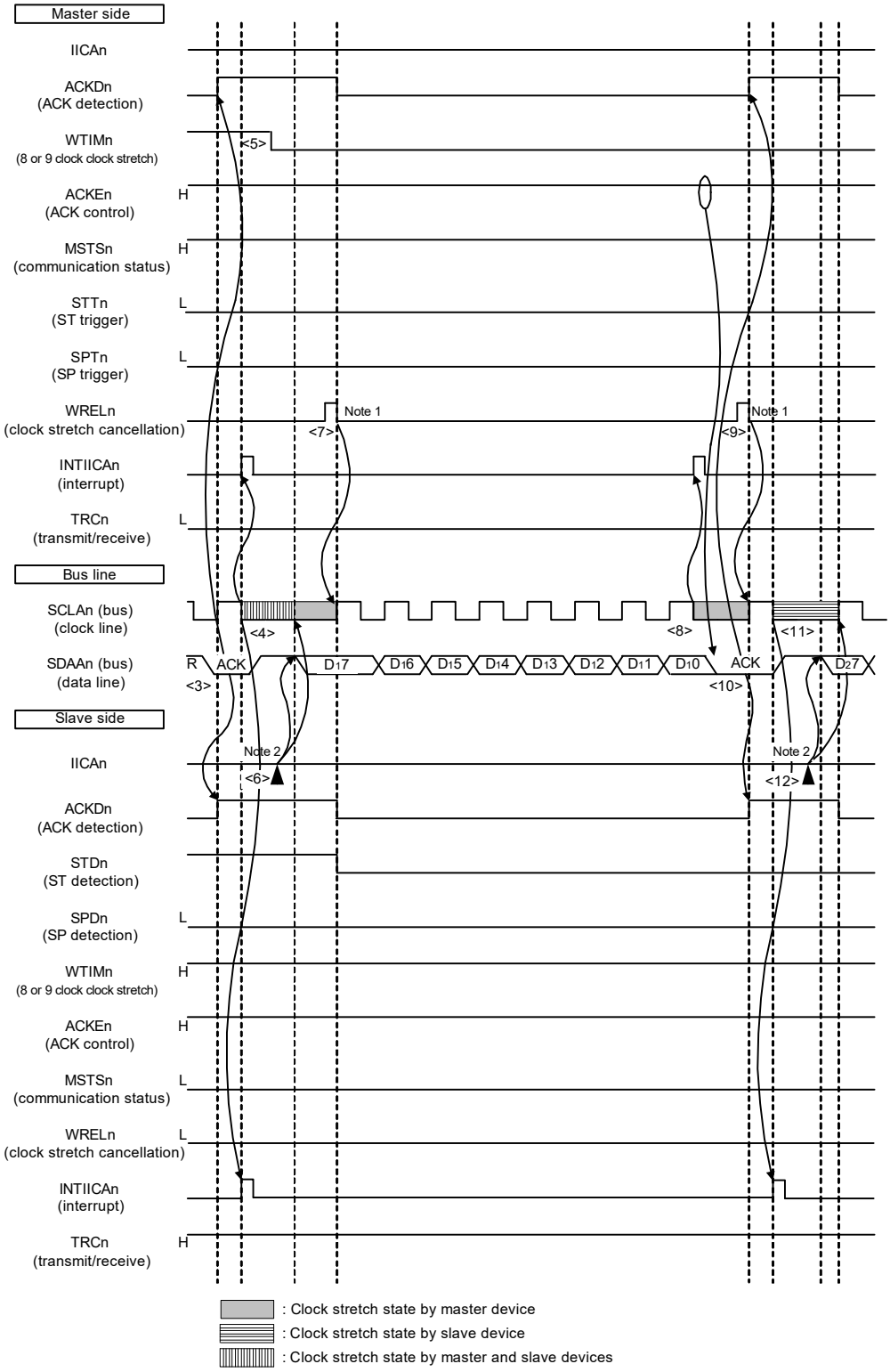

Note 1. For releasing clock stretch state during reception of a master device, write “FFH” to IICAn or set the WRELn bit.
Note 2. Write data to IICAn, not setting the WRELn bit, in order to cancel a clock stretch state during transmission by a slave device.
Remark n = 0

The meanings of <3> to <12> in (2) Address ~ data ~ data in Figure 20 - 46 are explained below.

<3> In the slave device if the address received matches the address (SVAn value) of a slave device Note, that slave device sends an ACK by hardware to the master device. The ACK is detected by the master device (ACKDn = 1) at the rising edge of the 9th clock.

<4> The master device issues an interrupt (INTIICAn: end of address transmission) at the falling edge of the 9th clock. The slave device whose address matched the transmitted slave address sets a clock stretch status (SCLAn = 0) and issues an interrupt (INTIICAn: address match)Note.

<5> The master device changes the timing of the clock stretch status to the 8th clock (WTIMn = 0).

<6> The slave device writes the data to transmit to the IICA shift register n (IICAn) and releases the clock stretch status that it set by the slave device.

<7> The master device releases the clock stretch status (WRELn = 1) and starts transferring data from the slave device to the master device.

<8> The master device sets a clock stretch status (SCLAn = 0) at the falling edge of the 8th clock, and issues an interrupt (INTIICAn: end of transfer). Because of ACKEn = 1 in the master device, the master device then sends an ACK by hardware to the slave device.

<9> The master device reads the received data and releases the clock stretch status (WRELn = 1).

<10>The ACK is detected by the slave device (ACKDn = 1) at the rising edge of the 9th clock.

<11>The slave device set a clock stretch status (SCLAn = 0) at the falling edge of the 9th clock, and the slave device issue an interrupt (INTIICAn: end of transfer).

<12>By the slave device writing the data to transmit to the IICAn register, the clock stretch status set by the slave device is released. The slave device then starts transferring data to the master device.

Note If the transmitted address does not match the address of the slave device, the slave device does not return an ACK to the master device (NACK: SDAAn = 1). The slave device also does not issue the INTIICAn interrupt (address match) and does not set a clock stretch status. The master device, however, issues the INTIICAn interrupt (end of address transmission) regardless of whether it receives an ACK or NACK.

Remark 1. <1> to <19> in Figures 20 - 45 to 20 - 47 represent the entire procedure for communicating data using the I^2C bus. Figure 20 - 45 (1) Start condition ~ address ~ data shows the processing from <1> to <7>, Figure 20 - 46 (2) Address ~ data ~ data shows the processing from <3> to <12>, and Figure 20 - 47 (3) Data ~ data ~ stop condition shows the processing from <8> to <19>.

Remark 2. n = 0

Figure 20 - 47 Example of Slave to Master Communication
(When 8-Clock and 9-Clock Clock Stretch Is Selected for Master, 9-Clock Clock Stretch Is Selected for Slave) (3/3)

(3) Data ~ data ~ stop condition

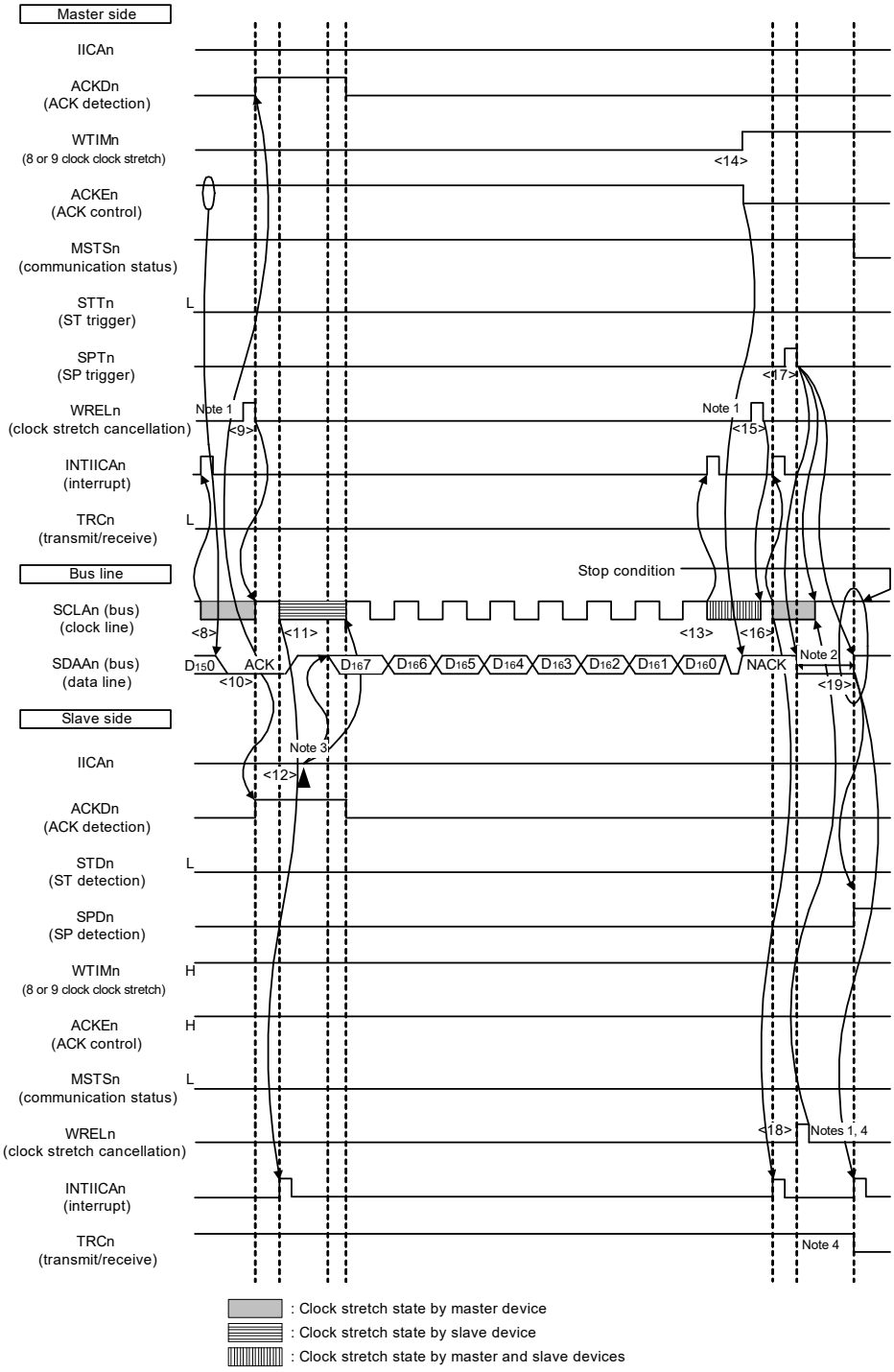

Note 1. To cancel a clock stretch state, write “FFH” to IICAn or set the WRELn bit.

Note 2. Make sure that the time between the rise of the SCLAn pin signal and the generation of the stop condition after a stop condition has been issued is at least 4.0 μs when specifying standard mode and at least 0.6 μs when specifying fast mode.

Note 3. Write data to IICAn, not setting the WRELn bit, in order to cancel a clock stretch state during transmission by a slave device.

Note 4. If a clock stretch state during transmission by a slave device is canceled by setting the WRELn bit, the TRCn bit will be cleared.

Remark n = 0

The meanings of <8> to <19> in (3) Data ~ data ~ stop condition in Figure 20 - 47 are explained below.

<8> The master device sets a clock stretch status (SCLAn = 0) at the falling edge of the 8th clock, and issues an interrupt (INTIICAn: end of transfer). Because of ACKEn = 0 in the master device, the master device then sends an ACK by hardware to the slave device.

<9> The master device reads the received data and releases the clock stretch status (WRELn = 1).

<10>The ACK is detected by the slave device (ACKDn = 1) at the rising edge of the 9th clock.

<11>The slave device set a clock stretch status (SCLAn = 0) at the falling edge of the 9th clock, and the slave device issue an interrupt (INTIICAn: end of transfer).

<12>By the slave device writing the data to transmit to the IICA register, the clock stretch status set by the slave device is released. The slave device then starts transferring data to the master device.

<13>The master device issues an interrupt (INTIICAn: end of transfer) at the falling edge of the 8th clock, and sets a clock stretch status (SCLAn = 0). Because ACK control (ACKEn = 1) is performed, the bus data line is at the low level (SDAAn = 0) at this stage.

<14>The master device sets NACK as the response (ACKEn = 0) and changes the timing at which it sets the clock stretch status to the 9th clock stretch (WTIMn = 1).

<15>If the master device releases the clock stretch status (WRELn = 1), the slave device detects the NACK (ACKDn = 0) at the rising edge of the 9th clock stretch.

<16>The master device and slave device set a clock stretch status (SCLAn = 0) at the falling edge of the 9th clock, and both the master device and slave device issue an interrupt (INTIICAn: end of transfer).

<17> When the master device issues a stop condition (SPTn = 1), the bus data line is cleared (SDAAn = 0) and the master device releases the clock stretch status. The master device then waits until the bus clock line is set (SCLAn = 1).

<18> The slave device acknowledges the NACK, halts transmission, and releases the clock stretch status (WRELn = 1) to end communication. Once the slave device releases the clock stretch status, the bus clock line is set (SCLAn = 1).

<19> Once the master device recognizes that the bus clock line is set (SCLAn = 1) and after the stop condition setup time has elapsed, the master device sets the bus data line (SDAAn = 1) and issues a stop condition (i.e. SCLAn =1 changes SDAAn from 0 to 1). The slave device detects the generated stop condition and slave device issue an interrupt (INTIICAn: stop condition).

Remark 1. <1> to <19> in Figures 20 - 45 to 20 - 47 represent the entire procedure for communicating data using the I^2C bus. Figure 20 - 45 (1) Start condition ~ address ~ data shows the processing from <1> to <7>, Figure 20 - 46 (2) Address ~ data ~ data shows the processing from <3> to <12>, and Figure 20 - 47 (3) Data ~ data ~ stop condition shows the processing from <8> to <19>.

Remark 2. n = 0

CHAPTER 21 IrDA

The IrDA sends and receives IrDA data communication waveforms in cooperation with the Serial Array Unit (SAU) based on the IrDA (Infrared Data Association) standard 1.0.

21.1 Functions of IrDA

Enabling the IrDA function by using the IRE bit in the IRCR register allows encoding and decoding the TxD2 and RxD2 signals of the SAU to the waveforms conforming to the IrDA standard 1.0 (IrTxD and IrRxD pins). Connecting these waveforms to an infrared transmitter/receiver implements infrared data communication conforming to the IrDA standard 1.0 system.

With the IrDA standard 1.0 system, data transfer can be started at 9600 bps and the transfer rate can be changed whenever necessary. Since the IrDA cannot change the transfer rate automatically, the transfer rate should be changed through software.

When the high-speed on-chip oscillator (f_{IH} =24/12/6/3 MHz) is selected, the following baud rates can be selected:

• 115.2 kbps/57.6 kbps/38.4 kbps/19.2 kbps/9600 bps/2400 bps

Figure 21 - 1 is a block diagram showing cooperation between IrDA and SAU.

Figure 21 - 1 Block Diagram Showing Cooperation Between IrDA and SAU

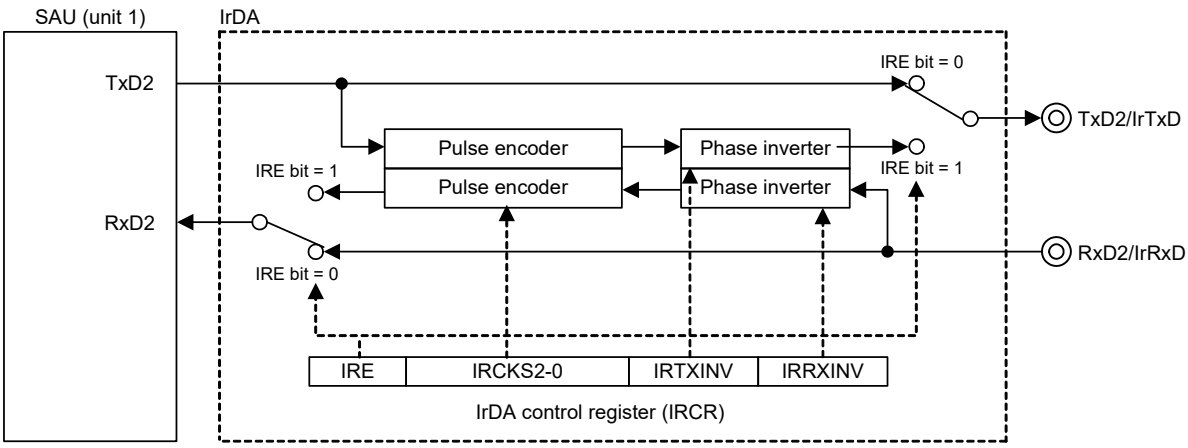

Table 21 - 1 IrDA Pin Configuration

Pin Name	I/O	Function
IrTxD	Output	Outputs data to be transmitted.
IrRxD	Input	Inputs received data.

21.2 Registers

Table 21 - 2 lists the IrDA register configuration.

Table 21 - 2 IrDA Register Configuration

Item	Configuration
Control registers	Peripheral enable register 0 (PER0)
	IrDA control register (IRCR)

21.2.1 Peripheral enable register 0 (PER0)

This register is used to enable or disable supplying the clock to the peripheral hardware. Clock supply to a hardware macro that is not used is stopped in order to reduce the power consumption and noise.

When the IrDA is used, be sure to set bit 6 (IRDAEN) of this register to 1.

The PER0 register can be set by a 1-bit or 8-bit memory manipulation instruction.

Reset signal generation clears this register to 00H.

Figure 21 - 2 Format of Peripheral Enable Register 0 (PER0)

Address: F00F0H After reset: 00H R/W

Symbol	7	6	5	4	3	2	1	0
PER1	RTCEN	IRDAEN	ADCEN	IICA0EN	SAU1EN	SAU0EN	0	TAU0EN

IRDAEN	Control of IrDA input clock supply
0	Stops input clock supply. • SFR used by the IrDA cannot be written. • The IrDA in the reset status.
1	Enables input clock supply. • SFR used by the IrDA can be read/written.

Caution 1. When setting the IrDA, be sure to set the IRDAEN bit to 1 first.
If IRDAEN = 0, writing to a control register of the IrDA is ignored, and all read values are default values.

Caution 2. Be sure to set bit 1 to “0”.

21.2.2 IrDA control register (IRCR)

The IRCR register is used to control the IrDA function. This register is used to switch the polarity of receive data and transmit data, select the IrDA clock, and select the serial I/O pin function (normal serial function or IrDA function).

The IRCR register can be set by a 1-bit or 8-bit memory manipulation instruction.

Reset signal generation clears this register to 00H.

Figure 21 - 3 Format of IrDA Control Register (IRCR)

Address: F03A0H After reset: 00H R/W

Symbol	7	6	5	4	3	2	1	0
IRCR	IRE	IRCKS2	IRCKS2	IRCKS0	IRTXINV	IRRXINV	0	0

IRE	IrDA enable
0	Serial I/O pins are used for normal serial communication.
1	Serial I/O pins are used for IrDA data communication.

IRCKS2	IRCKS1	IRCKS0	IrDA clock selection
0	0	0	B × 3/16 (B = bit rate)
0	0	1	$f_{CLK}/2$
0	1	0	$f_{CLK}/4$
0	1	1	$f_{CLK}/8$
1	0	0	$f_{CLK}/16$
1	0	1	$f_{CLK}/32$
1	1	0	$f_{CLK}/64$
1	1	1	Setting prohibited

IRTXINV	IrTxD data polarity switching
0	Data to be transmitted is output to IrTxD as is.
1	Data to be transmitted is output to IrTxD after the polarity is inverted.

IRRXINV	IrRxD data polarity switching
0	IrRxD input is used as received data as is.
1	IrRxD input is used as received data after the polarity is inverted.

Caution 1. Be sure to clear bits 1 and 0 to “0”.

Caution 2. RCKS[2:0], IRTXINV, and IRRXINV can be set only when IRE bit is 0.

21.3 Operation

21.3.1 IrDA communication operation procedure

(1) IrDA Communication Initial configuration flow

Perform IrDA initial configuration as follows:

<1> Set PER0 register bit IRDAEN to 1.

<2> Set the IRCR register.

<3> Set the SAU related registers (refer to the UART mode configuration procedure).

(2) IrDA communication termination flow

<1> Configure the port register and port mode register to set the status of the IrTxD pin after stopping IrDA communication.

Remark The output status may change because the IrTxD pin changes to normal serial interface UART data output when IrDA is reset in step 3.

- To output low level from IrTxD pin
  Set port register to 0. Immediately after this, the IrTxD pin is fixed at low level.
- To output high level from IrTxD pin
  Set port register to 1. This will fix IrTxD pin at high level immediately after IrDA reset in step 3.
- To set IrTxD pin to Hi-Z status
  Set port mode register to 1. Immediately after this, IrTxD pin is set to Hi-Z.

<2> Set STm register (SAU related register) bits STm0 and STm1 to 1 (stop SAU channels 0 and 1).

<3> Set PER0 register bit IRDAEN to 0 and reset IrDA.

Do not set STm register bits STm0 and STm1 to 1 or IrDA bit IRE to 0 with any procedure other than the above.

(3) Procedure when IrDA framing error occurs

If a framing error occurs during IrDA communication, the following procedure is necessary to enable receiving of subsequent data.

<1> Set SAU STm register bit STm1 to 1 (stop SAU CH1 operation)

<2> Set SAU SSm register bit SSm1 to 1 (start SAU CH1 operation)

Remark m: Unit number (m = 0, 1)

Also refer to the chapter on SAU for information on SAU framing error processing.

21.3.2 Transmission

In transmission, the signals output from the SAU (UART frames) are converted to the IR frame data through the IrDA (see Figure 21 - 4). When IRTXINV bit is 0 and serial data is 0, high-level pulses with the width of 3/16 the bit rate (1-bit width period) are output (initial setting). The high-level pulse width can be changed by using the IRCKS2 to IRCKS0 bits. The standard prescribes that the minimum high-level pulse width should be 1.41 μs and the maximum high-level pulse width be (3/16 + 2.5%) × bit rate or (3/16 × bit rate) + 1.08 μs.
When the CPU/peripheral hardware clock (f_{CLK}) is 20 MHz, the high-level pulse width can be 1.41 μs to 1.6 μs.
When serial data is 1, no pulses are output.

Figure 21 - 4 IrDA Transmission/Reception

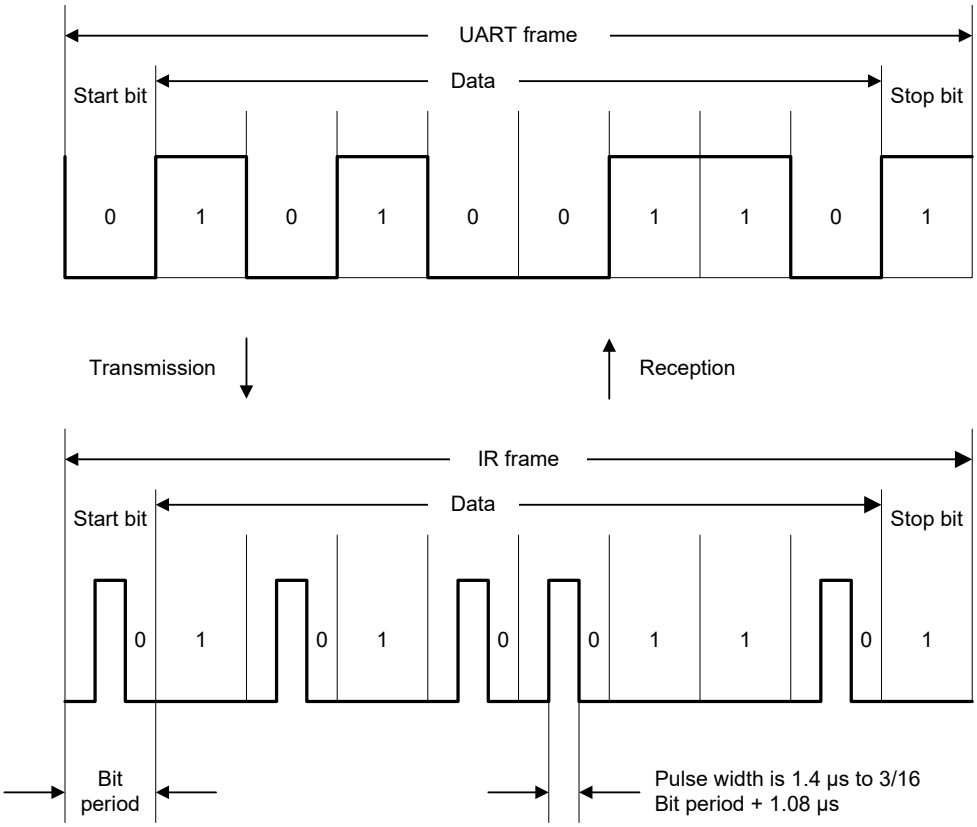

21.3.3 Reception

In reception, the IR frame data is converted to the UART frame data through the IrDA and is input to the SAU. Low-level data is output when the IRRXINV bit is 0 and a high-level pulse is detected, and high-level data is output when no pulse is detected for 1-bit period. Note that a pulse shorter than 1.41 μs, which is the minimum pulse width, is identified as a low signal.

21.3.4 Selecting High-Level Pulse Width

When the pulse width should be shorter than the bit rate × 3/16 for transmission, applicable IRCKS2 to IRCKS0 bit settings (minimum pulse width) and the corresponding high-level pulse widths shown in Table 21 - 3 can be used.

Table 21 - 3 IRCKS2 to IRCKS0 Bit Settings

f_{CLK} [MHz]	Item	<Upper Row> Bit Rate [kbps] <Lower Row> Bit Rate × 3/16 [μs]					
		2.4	9.6	19.2	38.4	57.6	115.2
		78.13	19.53	9.77	4.87	3.26	1.63
1	IRCKS2 to IRCKS0	001	001	001	—Note 1	—Note 1	—Note 1
	High-level pulse width [μs]	2.00	2.00	2.00	—Note 1	—Note 1	—Note 1
2	IRCKS2 to IRCKS0	010	010	010	010	010	—Note 1
	High-level pulse width [μs]	2.00	2.00	2.00	2.00	2.00	—Note 1
3	IRCKS2 to IRCKS0	011	011	011	011	011	—Note 1
	High-level pulse width [μs]	2.67	2.67	2.67	2.67	2.67	—Note 1
4	IRCKS2 to IRCKS0	011	011	011	011	011	000Note 2
	High-level pulse width [μs]	2.00	2.00	2.00	2.00	2.00	1.50
6	IRCKS2 to IRCKS0	100	100	100	100	100	000Note 2
	High-level pulse width [μs]	2.67	2.67	2.67	2.67	2.67	1.50
8	IRCKS2 to IRCKS0	100	100	100	100	100	000Note 2
	High-level pulse width [μs]	2.00	2.00	2.00	2.00	2.00	1.50
12	IRCKS2 to IRCKS0	101	101	101	101	101	000Note 2
	High-level pulse width [μs]	2.67	2.67	2.67	2.67	2.67	1.50
16	IRCKS2 to IRCKS0	101	101	101	101	101	000Note 2
	High-level pulse width [μs]	2.00	2.00	2.00	2.00	2.00	1.50
24	IRCKS2 to IRCKS0	110	110	110	110	110	000Note 2
	High-level pulse width [μs]	2.67	2.67	2.67	2.67	2.67	1.50

Note 1. "–" indicates that the communication specification cannot be satisfied.

Note 2. The pulse width cannot be shorter than the bit rate × 3/16.

21.4 Usage Notes on IrDA

(1) The IrDA function cannot be used to transition to SNOOZE via IrRxD reception.

(2) The input of IrDA operating clock can be disabled/enabled with the peripheral enable register. Initially, register access is disabled because clock input is disabled. Enable IrDA operating clock input with the peripheral enable register before setting the register.

(3) During HALT mode, the IrDA function continues to run.

(4) The use of SAU initialization function (SS bit= 1) is prohibited during IrDA communication.

(5) The IRCR register bits IRRXINV, IRTXINV, and IRCKS[2:0] can be set only when IRE bit is 0.

CHAPTER 22 DATA TRANSFER CONTROLLER (DTC)

The term “8 higher-order bits of the address” in this chapter indicates bits 15 to 8 of 20-bit address as shown below.

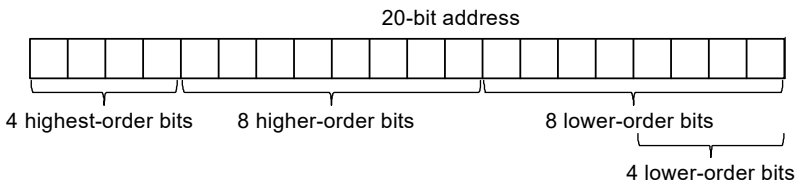

Unless otherwise specified, the 4 highest-order address bits all become 1 (values are of the form FxxxxH).

22.1 Functions of DTC

The data transfer controller (DTC) is a function that transfers data between memories without using the CPU. The DTC is activated by a peripheral function interrupt to perform data transfers. The DTC and CPU use the same bus, and the DTC takes priority over the CPU in using the bus.

Table 22 - 1 lists the DTC Specifications.

Table 22 - 1 DTC Specifications

Item		Specification
Activation sources		30 sources (24-pin products)/31 sources (36-pin products)/32 sources (32- and 48-pin products)/ 33 sources (64-pin products)
Allocatable control data		24 sets
Address space which can be transferred	Address space	64 Kbytes (F0000H to FFFFFH), excluding general-purpose registers
	Sources	Special function register (SFR), RAM area (excluding general-purpose registers), mirror area Note, data flash memory area Note, extended special function register (2nd SFR)
	Destinations	Special function register (SFR), RAM area (excluding general-purpose registers), extended special function register (2nd SFR)
Maximum number of transfers	Normal mode	256 times
	Repeat mode	255 times
Maximum size of block to be transferred	Normal mode (8-bit transfer)	256 bytes
	Normal mode (16-bit transfer)	512 bytes
	Repeat mode	255 bytes
Unit of transfers		8 bits/16 bits
Transfer mode	Normal mode	Transfers end on completion of the transfer causing the DTCCTj register value to change from 1 to 0.
	Repeat mode	On completion of the transfer causing the DTCCTj register value to change from 1 to 0, the repeat area address is initialized and the DTRLDj register value is reloaded to the DTCCTj register to continue transfers.
Address control	Normal mode	Fixed or incremented
	Repeat mode	Addresses of the area not selected as the repeat area are fixed or incremented.
Priority of activation sources		Refer to **Table 22 - 4 DTC Activation Sources and Vector Addresses**.
Interrupt request	Normal mode	When the data transfer causing the DTCCTj register value to change from 1 to 0 is performed, the activation source interrupt request is generated for the CPU, and interrupt handling is performed on completion of the data transfer.
	Repeat mode	When the data transfer causing the DTCCTj register value to change from 1 to 0 is performed while the RPTINT bit in the DTCCRj register is 1 (interrupt generation enabled), the activation source interrupt request is generated for the CPU, and interrupt handling is performed on completion of the transfer.

Table 22 - 1 DTC Specifications

Item		Specification
Transfer start		When bits DTCENi0 to DTCENi7 in the DTCENi registers are 1 (activation enabled), data transfer is started each time the corresponding DTC activation sources are generated.
Transfer stop	Normal mode	• When bits DTCENi0 to DTCENi7 are set to 0 (activation disabled). • When the data transfer causing the DTCCTj register value to change from 1 to 0 is completed.
	Repeat mode	• When bits DTCENi0 to DTCENi7 are set to 0 (activation disabled). • When the data transfer causing the DTCCTj register value to change from 1 to 0 is completed while the RPTINT bit is 1 (interrupt generation enabled).

Note In the HALT mode or SNOOZE mode, these areas cannot be set as the sources for DTC transfer since the flash memory is stopped.

Remark i = 0 to 4, j = 0 to 23

22.2 Configuration of DTC

Figure 22 - 1 shows the DTC Block Diagram.

Figure 22 - 1 DTC Block Diagram

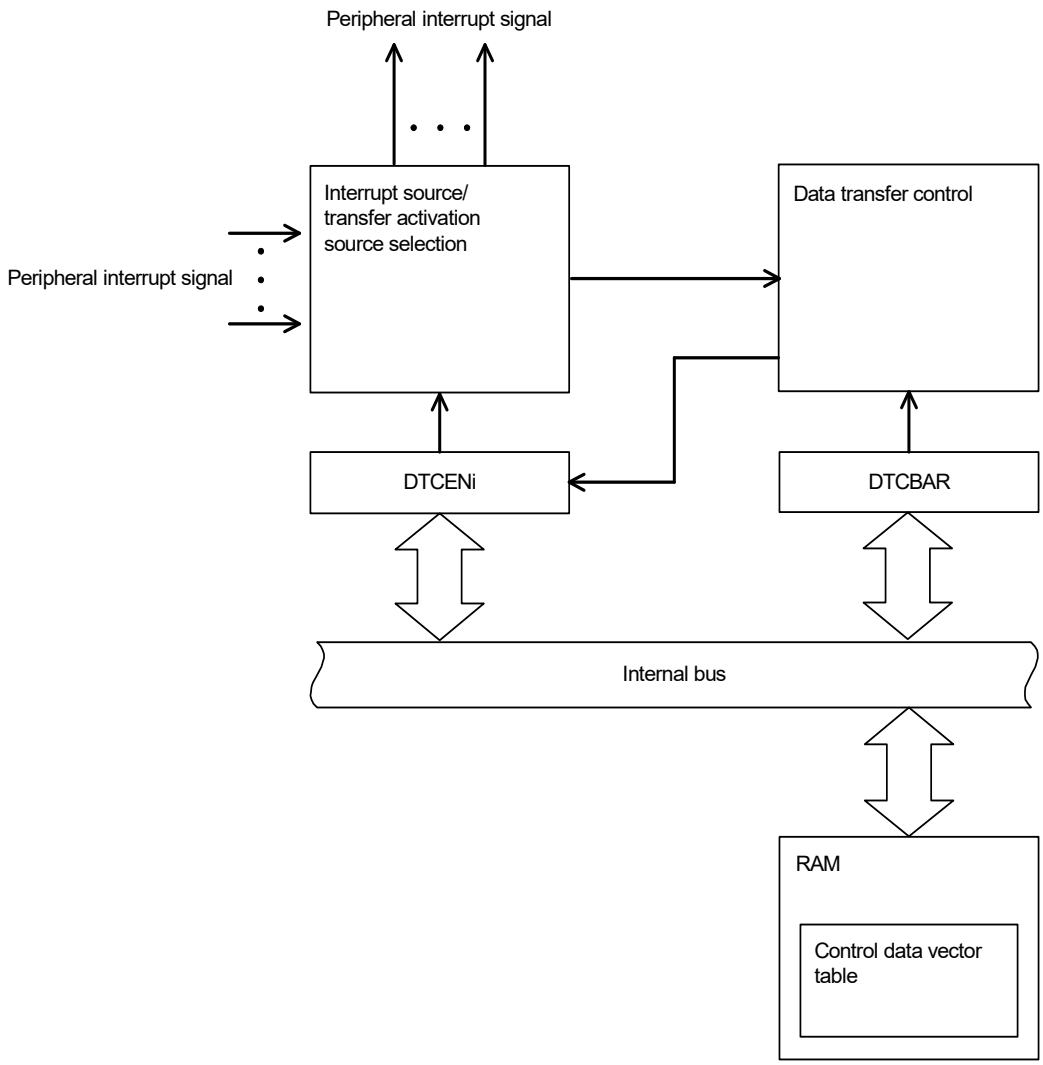

22.3 Registers Controlling DTC

Table 22 - 2 lists the Registers Controlling DTC.

Table 22 - 2 Registers Controlling DTC

Register Name	Symbol
Peripheral enable register 1	PER1
DTC activation enable register 0	DTCEN0
DTC activation enable register 1	DTCEN1
DTC activation enable register 2	DTCEN2
DTC activation enable register 3	DTCEN3
DTC activation enable register 4	DTCEN4
DTC base address register	DTCBAR

Table 22 - 3 lists DTC Control Data.

DTC control data is allocated in the DTC control data area in RAM.

The DTCBAR register is used to set the 256-byte area, including the DTC control data area and the DTC vector table area where the start address for control data is stored.

Table 22 - 3 DTC Control Data

Register Name	Symbol
DTC Control Register j	DTCCRj
DTC Block Size Register j	DTBLSj
DTC Transfer Count Register j	DTCCTj
DTC Transfer Count Reload Register j	DTRLDj
DTC Source Address Register j	DTSARj
DTC Destination Address Register j	DTDARj

Remark j = 0 to 23

22.3.1 Allocation of DTC Control Data Area and DTC Vector Table Area

The DTCBAR register is used to set the 256-byte area where DTC control data and the vector table within the RAM area.

Figure 22 - 2 shows a Memory Map Example when DTCBAR Register is Set to FBH.

In the 192-byte DTC control data area, the space not used by the DTC can be used as RAM.

Figure 22 - 2 Memory Map Example when DTCBAR Register is Set to FBH

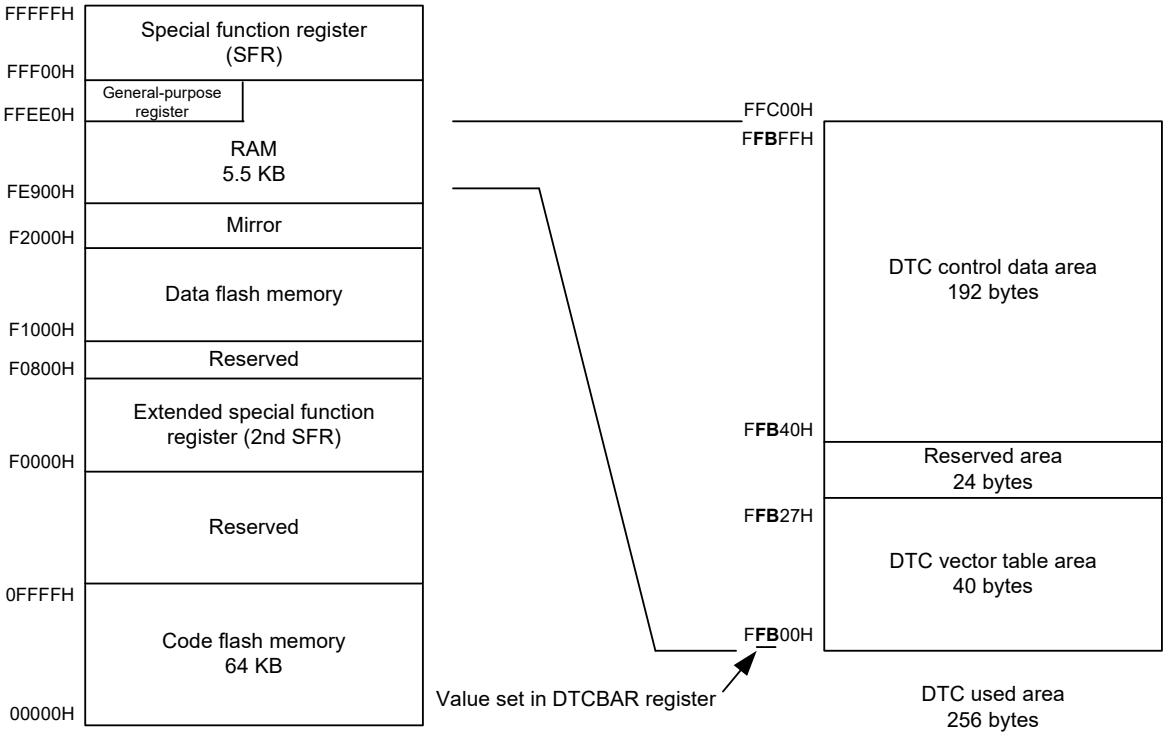

The areas where the DTC control data and vector table can be allocated differ depending on the product.

Caution 1. It is prohibited to use the general-purpose register (FFEE0H to FFEFFH) space as the DTC control data area or DTC vector table area.

Caution 2. Make sure the stack area, the DTC control data area, and the DTC vector table area do not overlap.

Caution 3. The internal RAM area (FE900H to FED09H) cannot be used as the DTC control data area or DTC vector table area when using the self-programming and data-flash functions.

Caution 4. The internal RAM area (FED00H to FF0FFH) cannot be used as the DTC control data area or DTC vector table area when using the on-chip debugging trace function.

22.3.2 Control Data Allocation

Control data is allocated beginning with each start address in the order: Registers DTCCRj, DTBLSj, DTCCTj, DTRLDj, DTSARj, and DTDARj (j = 0 to 23).

The higher 8 bits for start addresses 0 to 23 are set by the DTCBAR register, and the lower 8 bits are separately set according to the vector table assigned to each activation source.

Figure 22 - 3 shows Control Data Allocation.

Note 1. Change the data in registers DTCCRj, DTBLSj, DTCCTj, DTRLDj, DTSARj, and DTDARj when the corresponding bit among bits DTCENi0 to DTCENi7 (i = 0 to 4) in the DTCENi register is set to 0 (activation disabled).

Note 2. Do not access DTCCRj, DTBLSj, DTCCTj, DTRLDj, DTSARj, or DTDARj using a DTC transfer.

Figure 22 - 3 Control Data Allocation

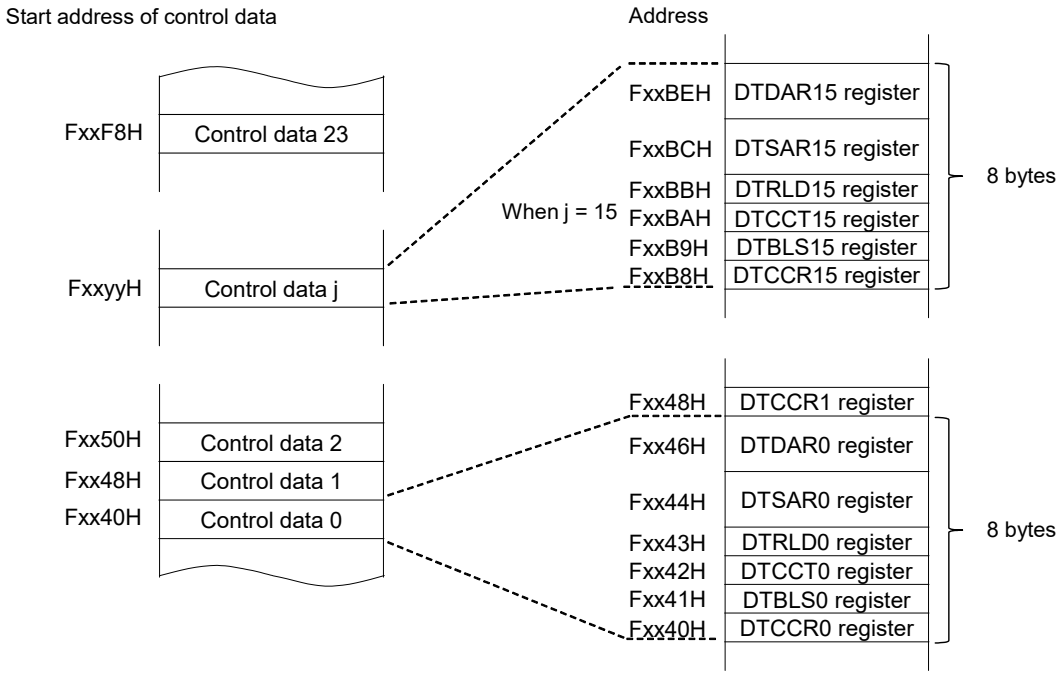

Remark xx: Value set in DTCBAR register

22.3.3 Vector Table

When the DTC is activated, one control data is selected according to the data read from the vector table which has been assigned to each activation source, and the selected control data is read from the DTC control data area.

Table 22 - 4 lists the DTC Activation Sources and Vector Addresses. A one byte of the vector table is assigned to each activation source, and data from 40H to F8H is stored in each area to select one of the 24 control data sets. The higher 8 bits for the vector address are set by the DTCBAR register, and 00H to 27H are allocated to the lower 8 bits corresponding to the activation source.

Note Change the start address of the DTC control data area to be set in the vector table when the corresponding bit among bits DTCENi0 to DTCENi7 (i = 0 to 4) in the DTCENi register is set to 0 (activation disabled).

Figure 22 - 4 Start Address of Control Data and Vector Table

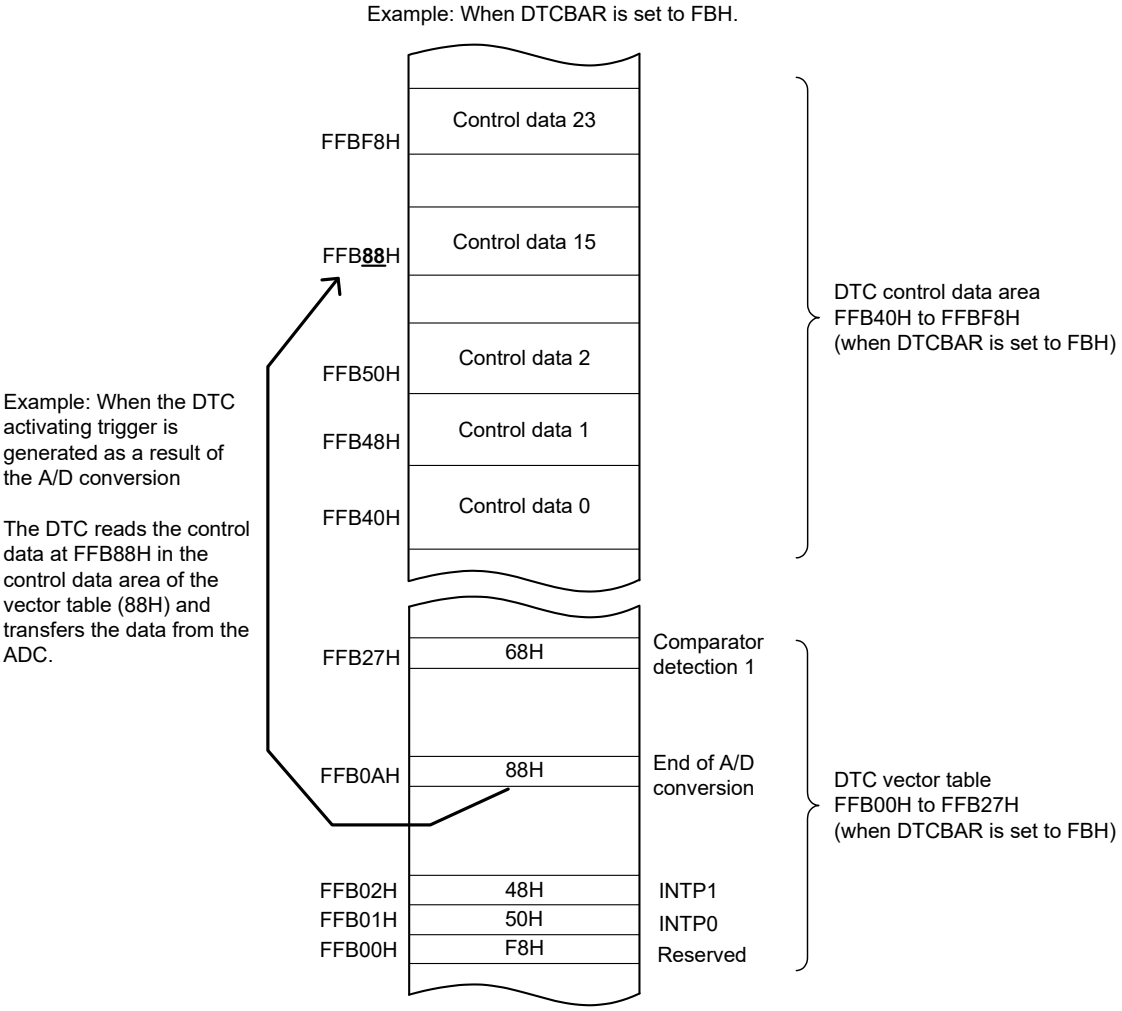

Table 22 - 4 DTC Activation Sources and Vector Addresses

DTC Activation Sources (Interrupt Request Source)	Source No.	Vector Address	Priority
Reserved	0	Address set in DTCBAR register +00H	Highest
INTP0	1	Address set in DTCBAR register +01H	↑
INTP1	2	Address set in DTCBAR register +02H	
INTP2	3	Address set in DTCBAR register +03H	
INTP3	4	Address set in DTCBAR register +04H	
INTP4	5	Address set in DTCBAR register +05H	
INTP5	6	Address set in DTCBAR register +06H	
INTP6[Note 1]	7	Address set in DTCBAR register +07H	
INTP7[Note 2]	8	Address set in DTCBAR register +08H	
Key input[Note 3]	9	Address set in DTCBAR register +09H	
A/D conversion end	10	Address set in DTCBAR register +0AH	
UART0 reception transfer end/CSI01 transfer end or buffer empty/IIC01 transfer end	11	Address set in DTCBAR register +0BH	
UART0 transmission transfer end/CSI00 transfer end or buffer empty/IIC00 transfer end	12	Address set in DTCBAR register +0CH	
UART1 reception transfer end/CSI11 transfer end or buffer empty/IIC11 transfer end	13	Address set in DTCBAR register +0DH	
UART1 transmission transfer end/CSI10 transfer end or buffer empty/IIC10 transfer end	14	Address set in DTCBAR register +0EH	
UART2 reception transfer end/CSI21 transfer end or buffer empty/IIC21 transfer end	15	Address set in DTCBAR register +0FH	
UART2 transmission transfer end/CSI20 transfer end or buffer empty/IIC20 transfer end	16	Address set in DTCBAR register +10H	
End of channel 0 of timer array unit 0 count or capture	19	Address set in DTCBAR register +13H	
End of channel 1 of timer array unit 0 count or capture	20	Address set in DTCBAR register +14H	
End of channel 2 of timer array unit 0 count or capture	21	Address set in DTCBAR register +15H	
End of channel 3 of timer array unit 0 count or capture	22	Address set in DTCBAR register +16H	
Timer RD compare match A0	27	Address set in DTCBAR register +1BH	
Timer RD compare match B0	28	Address set in DTCBAR register +1CH	
Timer RD compare match C0	29	Address set in DTCBAR register +1DH	
Timer RD compare match D0	30	Address set in DTCBAR register +1EH	
Timer RD compare match A1	31	Address set in DTCBAR register +1FH	
Timer RD compare match B1	32	Address set in DTCBAR register +20H	
Timer RD compare match C1	33	Address set in DTCBAR register +21H	
Timer RD compare match D1	34	Address set in DTCBAR register +22H	
Timer RG compare match A	35	Address set in DTCBAR register +23H	
Timer RG compare match B	36	Address set in DTCBAR register +24H	
Timer RJ0 underflow	37	Address set in DTCBAR register +25H	
Comparator detection 0	38	Address set in DTCBAR register +26H	↓
Comparator detection 1	39	Address set in DTCBAR register +27H	Lowest

Note 1. For 32-, 36-, 48-, 64-pin products only.

Note 2. For 32-, 64-pin products only.

Note 3. For 48-, 64-pin products only

22.3.4 Peripheral enable register 1 (PER1)

The PER1 register is used to enable or disable supplying the clock to the peripheral hardware. Clock supply to the hardware that is not used is also stopped so as to decrease the power consumption and noise.
When using the DTC, be sure to set bit 3 (DTCEN) to 1.

The PER1 register can be set by a 1-bit or 8-bit memory manipulation instruction.
Reset signal generation clears this register to 00H.

Figure 22 - 5 Format of Peripheral enable register 1 (PER1)

Address: F007AH After reset: 00H R/W

Symbol	<7>	<6>	<5>	<4>	<3>	<2>	<1>	<0>
PER1	DACEN	TRGEN	PGACMPEN	TRD0EN	DTCEN	PWMOPEN	TRXEN	TRJ0EN

DTCEN	Control of DTC input clock supply
0	Stops input clock supply. • DTC cannot run.
1	Enables input clock supply. • DTC can run.

22.3.5 DTC control register j (DTCCRj) (j = 0 to 23)

The DTCCRj register is used to control the DTC operating mode.

Figure 22 - 6 Format of DTC control register j (DTCCRj)

Address: Refer to **22.3.2 Control Data Allocation**. After reset: Undefined R/W

Symbol	7	6	5	4	3	2	1	0
DTCCRj	0	SZ	RPTINT	CHNE	DAMOD	SAMOD	RPTSEL	MODE

SZ	Transfer Data size selection
0	8 bits
1	16 bits

RPTINT	Enabling/disabling repeat mode interrupts
0	Interrupt generation disabled
1	Interrupt generation enabled
The setting of the RPTINT bit is invalid when the MODE bit is 0 (normal mode).	

CHNE	Enabling/disabling chain transfers
0	Chain transfers disabled
1	Chain transfers enabled
Set the CHNE bit in the DTCCR23 register to 0 (chain transfers disabled).	

DAMOD	Transfer destination address control
0	Fixed
1	Incremented
The setting of the DAMOD bit is invalid when the MODE bit is 1 (repeat mode) and the RPTSEL bit is 0 (transfer destination is the repeat area).	

SAMOD	Transfer source address control
0	Fixed
1	Incremented
The setting of the SAMOD bit is invalid when the MODE bit is 1 (repeat mode) and the RPTSEL bit is 1 (transfer source is the repeat area).	

RPTSEL	Repeat area selection
0	Transfer destination is the repeat area
1	Transfer source is the repeat area
The setting of the RPTSEL bit is invalid when the MODE bit is 0 (normal mode).	

MODE	Transfer mode selection
0	Normal mode
1	Repeat mode

Caution Do not access the DTCCRj register using a DTC transfer.

22.3.6 DTC block size register j (DTBLSj) (j = 0 to 23)

This register is used to set the block size of the data to be transferred by one activation.

Figure 22 - 7 Format of DTC block size register j (DTBLSj)

Address: Refer to **22.3.2 Control Data Allocation**. After reset: Undefined R/W

Symbol	7	6	5	4	3	2	1	0
DTBLSj	DTBLSj7	DTBLSj6	DTBLSj5	DTBLSj4	DTBLSj3	DTBLSj2	DTBLSj1	DTBLSj0

DTBLSj	Transfer Block Size	
	8-Bit Transfer	16-Bit Transfer
00H	256 bytes	512 bytes
01H	1 byte	2 bytes
02H	2 bytes	4 bytes
03H	3 bytes	6 bytes
• • •	• • •	• • •
FDH	253 bytes	506 bytes
FEH	254 bytes	508 bytes
FFH	255 bytes	510 bytes

Caution Do not access the DTBLSj register using a DTC transfer.

22.3.7 DTC transfer count register j (DTCCTj) (j = 0 to 23)

This register is used to set the number of DTC data transfers. The value is decremented by 1 each time DTC transfer is activated once.

Figure 22 - 8 Format of DTC transfer count register j (DTCCTj)

Address: Refer to **22.3.2 Control Data Allocation**. After reset: Undefined R/W

Symbol	7	6	5	4	3	2	1	0
DTCCTj	DTCCTj7	DTCCTj6	DTCCTj5	DTCCTj4	DTCCTj3	DTCCTj2	DTCCTj1	DTCCTj0

DTCCTj	Number of Transfers
00H	256 times
01H	Once
02H	2 times
03H	3 times
• • •	• • •
FDH	253 times
FEH	254 times
FFH	255 times

Caution Do not access the DTCCTj register using a DTC transfer.

22.3.8 DTC transfer count reload register j (DTRLDj) (j = 0 to 23)

This register is used to set the initial value of the transfer count register in repeat mode. Since the value of this register is reloaded to the DTCCT register in repeat mode, set the same value as the initial value of the DTCCT register.

Figure 22 - 9 Format of DTC transfer count reload register j (DTRLDj)

Address: Refer to **22.3.2 Control Data Allocation**. After reset: Undefined R/W

	7	6	5	4	3	2	1	0
DTRLDj	DTRLDj7	DTRLDj6	DTRLDj5	DTRLDj4	DTRLDj3	DTRLDj2	DTRLDj1	DTRLDj0

Caution Do not access the DTRLDj register using a DTC transfer.

22.3.9 DTC source address register j (DTSARj) (j = 0 to 23)

This register is used to specify the transfer source address for data transfer.
When the SZ bit in the DTCCRj register is set to 1 (16-bit transfer), the lowest bit is ignored and the address is handled as an even address.

Figure 22 - 10 Format of DTC source address register j (DTSARj)

Address: Refer to **22.3.2 Control Data Allocation**. After reset: Undefined R/W

	15	14	13	12	11	10	9	8	7	6	5	4	3	2	1	0
DTSARj	DTS ARj15	DTS ARj14	DTS ARj13	DTS ARj12	DTS ARj11	DTS ARj10	DTS ARj9	DTS ARj8	DTS ARj7	DTS ARj6	DTS ARj5	DTS ARj4	DTS ARj3	DTS ARj2	DTS ARj1	DTS ARj0

Caution 1. Do not set the general-purpose register (FFEE0H to FFEFFH) space to the transfer source address.
Caution 2. Do not access the DTSARj register using a DTC transfer.

22.3.10 DTC destination address register j (DTDARj) (j = 0 to 23)

This register is used to specify the transfer destination address for data transfer.
When the SZ bit in the DTCCRj register is set to 1 (16-bit transfer), the lowest bit is ignored and the address is handled as an even address.

Figure 22 - 11 Format of DTC destination address register j (DTDARj)

Address: Refer to **22.3.2 Control Data Allocation**. After reset: Undefined R/W

	15	14	13	12	11	10	9	8	7	6	5	4	3	2	1	0
DTDARj	DTD ARj15	DTD ARj14	DTD ARj13	DTD ARj12	DTD ARj11	DTD ARj10	DTD ARj9	DTD ARj8	DTD ARj7	DTD ARj6	DTD ARj5	DTD ARj4	DTD ARj3	DTD ARj2	DTD ARj1	DTD ARj0

Caution 1. Do not set the general-purpose register (FFEE0H to FFEFFH) space to the transfer source address.
Caution 2. Do not access the DTDARj register using a DTC transfer.

22.3.11 DTC activation enable register i (DTCENi) (i = 0 to 4)

This is an 8-bit register which enables or disables DTC activation by interrupt sources. Table 22 - 5 lists the Correspondences between Interrupt Sources and Bits DTCENi0 to DTCENi7.

The DTCENi register can be set by an 8-bit memory manipulation instruction and a 1-bit memory manipulation instruction.

Caution 1. Modify bits DTCENi0 to DTCENi7 if an activation source corresponding to the bit has not been generated.

Caution 2. Do not access the DTCENi register using a DTC transfer.

Caution 3. The assigned functions differ depending on the product. For the bits to which no function is assigned, be sure to set their values to 0.

Figure 22 - 12 Format of DTC activation enable register i (DTCENi) (i = 0 to 4)

Address: F02E8H (DTCEN0), F02E9H (DTCEN1), F02EAH (DTCEN2), F02EBH (DTCEN3), F02ECH (DTCEN4) After reset: 00H R/W

Symbol	7	6	5	4	3	2	1	0
DTCENi	DTCENi7	DTCENi6	DTCENi5	DTCENi4	DTCENi3	DTCENi2	DTCENi1	DTCENi0

DTCENi7	DTC activation enable i7
0	Activation disabled
1	Activation enabled
The DTCENi7 bit is set to 0 (activation disabled) by a condition for generating a transfer end interrupt.	

DTCENi6	DTC activation enable i6
0	Activation disabled
1	Activation enabled
The DTCENi6 bit is set to 0 (activation disabled) by a condition for generating a transfer end interrupt.	

DTCENi5	DTC activation enable i5
0	Activation disabled
1	Activation enabled
The DTCENi5 bit is set to 0 (activation disabled) by a condition for generating a transfer end interrupt.	

DTCENi4	DTC activation enable i4
0	Activation disabled
1	Activation enabled
The DTCENi4 bit is set to 0 (activation disabled) by a condition for generating a transfer end interrupt.	

DTCENi3	DTC activation enable i3
0	Activation disabled
1	Activation enabled
The DTCENi3 bit is set to 0 (activation disabled) by a condition for generating a transfer end interrupt.	

DTCENi2	DTC activation enable i2
0	Activation disabled
1	Activation enabled
The DTCENi2 bit is set to 0 (activation disabled) by a condition for generating a transfer end interrupt.	

DTCENi1	DTC activation enable i1
0	Activation disabled
1	Activation enabled
The DTCENi1 bit is set to 0 (activation disabled) by a condition for generating a transfer end interrupt.	

DTCENi0	DTC activation enable i0
0	Activation disabled
1	Activation enabled
The DTCENi0 bit is set to 0 (activation disabled) by a condition for generating a transfer end interrupt.	

Table 22 - 5 Correspondences between Interrupt Sources and Bits DTCENi0 to DTCENi7

Register	DTCENi7 Bit	DTCENi6 Bit	DTCENi5 Bit	DTCENi4 Bit	DTCENi3 Bit	DTCENi2 Bit	DTCENi1 Bit	DTCENi0 Bit
DTCEN0	Reserved	INTP0	INTP1	INTP2	INTP3	INTP4	INTP5	INTP6[Note 1]
DTCEN1	INTP7[Note 2]	Key input[Note 3]	A/D conversion end	UART0 reception transfer end/CSI01 transfer end or buffer empty/IIC01 transfer end	UART0 transmission transfer end/CSI00 transfer end or buffer empty/IIC00 transfer end	UART1 reception transfer end/CSI11 transfer end or buffer empty/IIC11 transfer end	UART1 transmission transfer end/CSI10 transfer end or buffer empty/IIC10 transfer end	UART2 reception transfer end/CSI21 transfer end or buffer empty/IIC21 transfer end
DTCEN2	UART2 transmission transfer end/CSI20 transfer end or buffer empty/IIC20 transfer end	—	—	End of channel 0 of timer array unit 0 count or capture	End of channel 1 of timer array unit 0 count or capture	End of channel 2 of timer array unit 0 count or capture	End of channel 3 of timer array unit 0 count or capture	—
DTCEN3	—	—	—	Timer RD compare match A0	Timer RD compare match B0	Timer RD compare match C0	Timer RD compare match D0	Timer RD compare match A1
DTCEN4	Timer RD compare match B1	Timer RD compare match C1	Timer RD compare match D1	Timer RG compare match A	Timer RG compare match B	Timer RJ0 underflow	Comparator detection 0	Comparator detection 1 Note 2

Note 1. For 32-, 36-, 48-, 64-pin products only.
Note 2. For 32-, 64-pin products only.
Note 3. For 48-, 64-pin products only

Caution **For the bits to which no function is assigned, be sure to set their values to 0.**

Remark i = 0 to 4

22.3.12 DTC base address register (DTCBAR)

This is an 8-bit register used to set the following addresses: the vector address where the start address of the DTC control data area is stored and the address of the DTC control data area. The value of the DTCBAR register is handled as the higher 8 bits to generate a 16-bit address.

Caution 1. Change the DTCBAR register value with all DTC activation sources set to activation disabled.
Caution 2. Do not rewrite the DTCBAR register more than once.
Caution 3. Do not access the DTCBAR register using a DTC transfer.
Caution 4. For the allocation of the DTC control data area and the DTC vector table area, refer to the notes on 22.3.1 Allocation of DTC Control Data Area and DTC Vector Table Area.

Figure 22 - 13 Format of DTC base address register (DTCBAR)

Address: F02E0H After reset: FDH R/W

Symbol	7	6	5	4	3	2	1	0
DTCBAR	DTCBAR7	DTCBAR6	DTCBAR5	DTCBAR4	DTCBAR3	DTCBAR2	DTCBAR1	DTCBAR0

22.4 DTC Operation

When the DTC is activated, control data is read from the DTC control data area to perform data transfers and control data after data transfer is written back to the DTC control data area. Twenty-four sets of control data can be stored in the DTC control data area, which allows 24 types of data transfers to be performed.
There are two transfer modes (normal mode and repeat mode) and two transfer sizes (8-bit transfer and 16-bit transfer). When the CHNE bit in the DTCCRj (j = 0 to 23) register is set to 1 (chain transfers enabled), multiple control data is read and data transfers are continuously performed by one activation source (chain transfers).
A transfer source address is specified by the 16-bit register DTSARj, and a transfer destination address is specified by the 16-bit register DTDARj.
The values in registers DTSARj and DTDARj are separately incremented or fixed according to the control data after the data transfer.

22.4.1 Activation Sources

The DTC is activated by an interrupt signal from the peripheral functions. The interrupt signals to activate the DTC are selected with the DTCENi (i = 0 to 4) register.

The DTC sets the corresponding bit among bits DTCENi0 to DTCENi7 in the DTCENi register to 0 (activation disabled) during operation when the setting of data transfer (the first transfer in chain transfers) is either of the following:

- A transfer that causes the DTCCTj (j = 0 to 23) register value to change to 0 in normal mode
- A transfer that causes the DTCCTj register value to change to 0 while the RPTINT bit in the DTCCRj register is 1 (interrupt generation enabled) in repeat mode

Figure 22 - 14 shows the DTC Internal Operation Flowchart.

Figure 22 - 14 DTC Internal Operation Flowchart

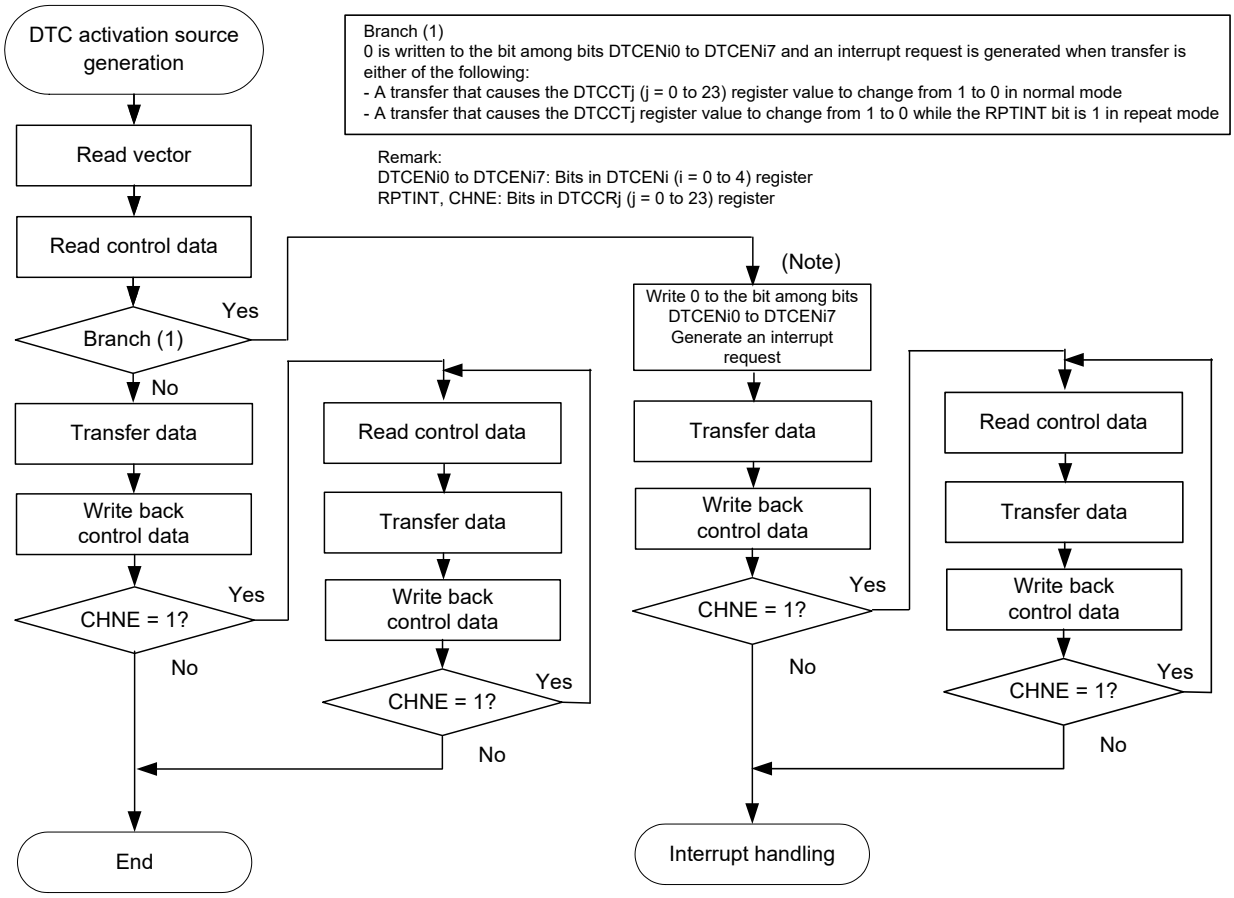

Note 0 is not written to the bit among bits DTCENi0 to DTCENi7 for data transfers activated by the setting to enable chain transfers (the CHNE bit is 1). Also, no interrupt request is generated.

22.4.2 Normal Mode

One to 256 bytes of data are transferred by one activation during 8-bit transfer and 2 to 512 bytes during 16-bit transfer. The number of transfers can be 1 to 256 times. When the data transfer causing the DTCCTj (j = 0 to 23) register value to change to 0 is performed, the DTC generates an interrupt request corresponding to the activation source to the interrupt controller during DTC operation, and sets the corresponding bit among bits DTCENi0 to DTCENi7 (i = 0 to 4) in the DTCENi register to 0 (activation disabled).

Table 22 - 6 shows Register Functions in Normal Mode. Figure 22 - 15 shows Data Transfers in Normal Mode.

Table 22 - 6 Register Functions in Normal Mode

Register Name	Symbol	Function
DTC block size register j	DTBLSj	Size of the data block to be transferred by one activation
DTC transfer count register j	DTCCTj	Number of data transfers
DTC transfer count reload register j	DTRLDj	Not used Note
DTC source address register j	DTSARj	Data transfer source address
DTC destination address register j	DTDARj	Data transfer destination address

Note Initialize this register to 00H when parity error resets are enabled (RPERDIS = 0) using the RAM parity error detection function.

Remark j = 0 to 23

Figure 22 - 15 Data Transfers in Normal Mode

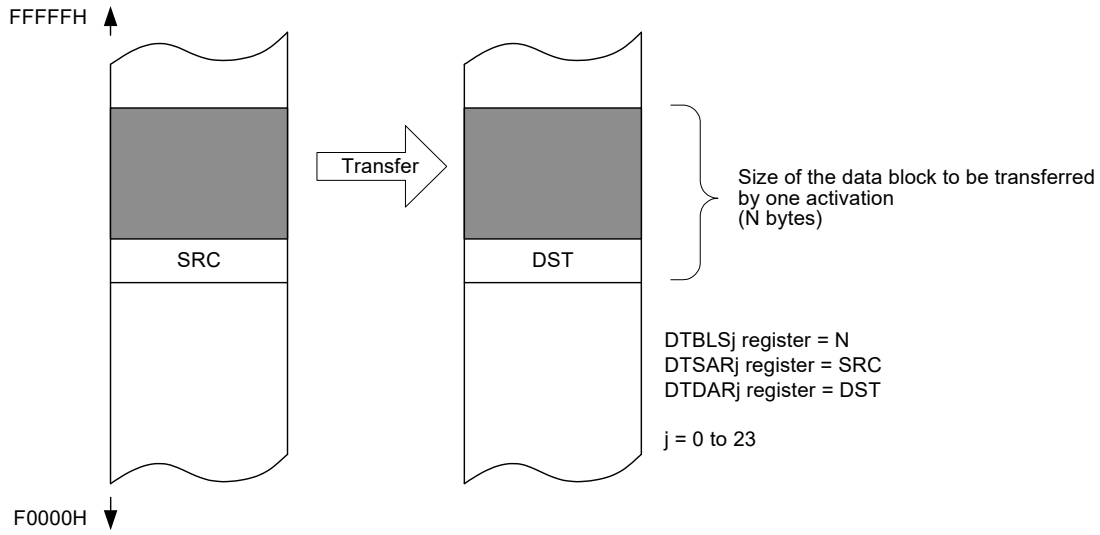

DTCCR Register Setting				Source Address Control	Destination Address Control	Source Address after Transfer	Destination Address after Transfer
DAMOD	SAMOD	RPTSEL	MODE				
0	0	X	0	Fixed	Fixed	SRC	DST
0	1	X	0	Incremented	Fixed	SRC + N	DST
1	0	X	0	Fixed	Incremented	SRC	DST + N
1	1	X	0	Incremented	Incremented	SRC + N	DST + N

X: 0 or 1

(1) Example 1 of using normal mode: Consecutively capturing A/D conversion results

The DTC is activated by an A/D conversion end interrupt and the value of the A/D conversion result register is transferred to RAM.

- The vector address is FFB0AH and control data is allocated at FFBA0H to FFBA7H
- Transfers 2-byte data of the A/D conversion result register (FFF1EH, FFF1FH) to 80 bytes of FFD80H to FFDCFH of RAM 40 times

Figure 22 - 16 Example 1 of using normal mode: Consecutively capturing A/D conversion results

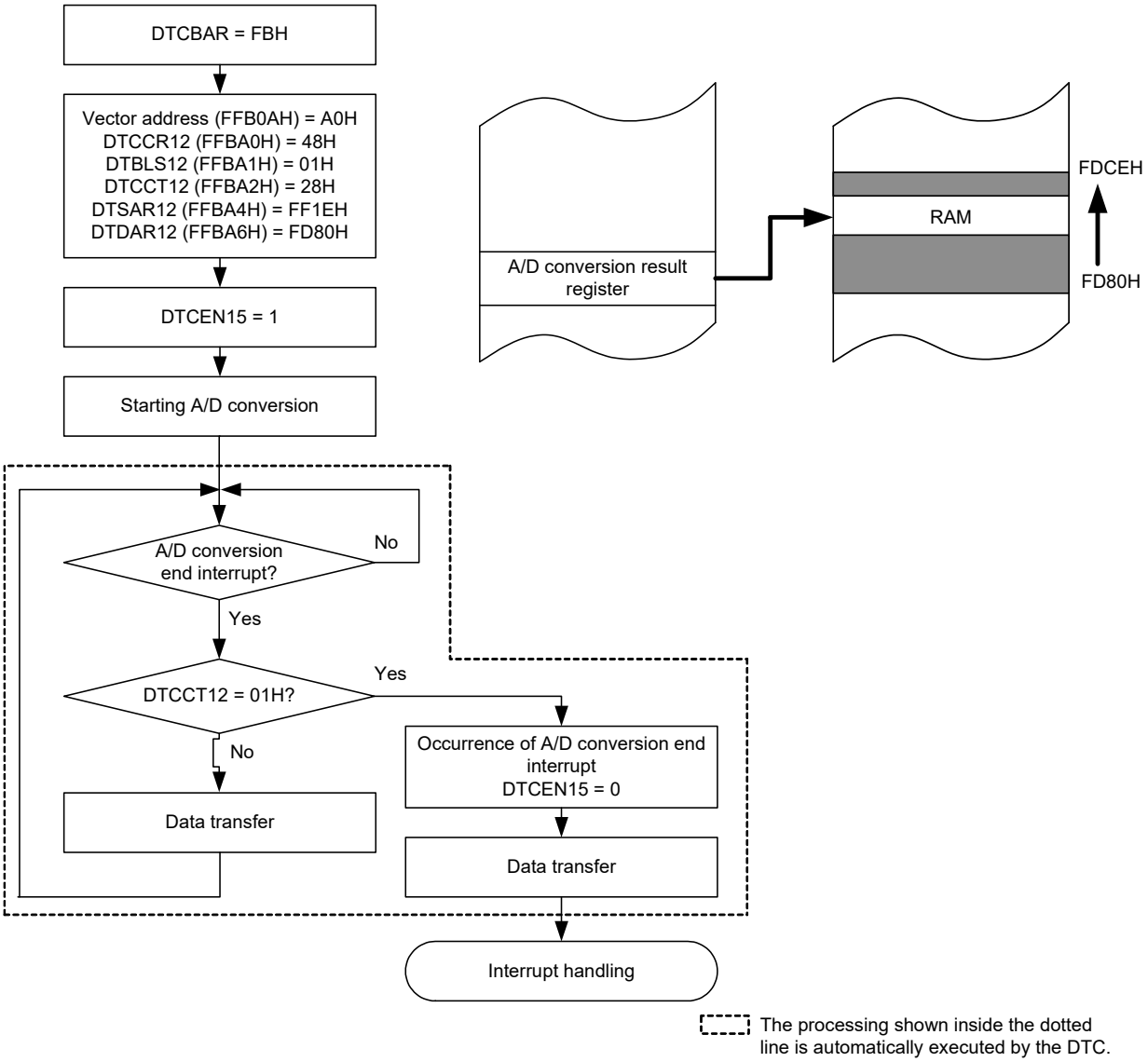

The value of the DTRLD12 register is not used because of normal mode, but initialize the register to 00H when parity error resets are enabled (RPERDIS = 0) using the RAM parity error detection function.

(2) Example 2 of using normal mode: UART0 consecutive transmission

The DTC is activated by a UART0 transmit buffer empty interrupt and the value of RAM is transferred to the UART0 transmit buffer.

- The vector address is FFB0CH and control data is allocated at FFBC8H to FFBCFH
- Transfers 8 bytes of FFCF8H to FFCFFH of RAM to the UART0 transmit buffer (FFF10H)

Figure 22 - 17 Example 2 of using normal mode: UART0 consecutive transmission

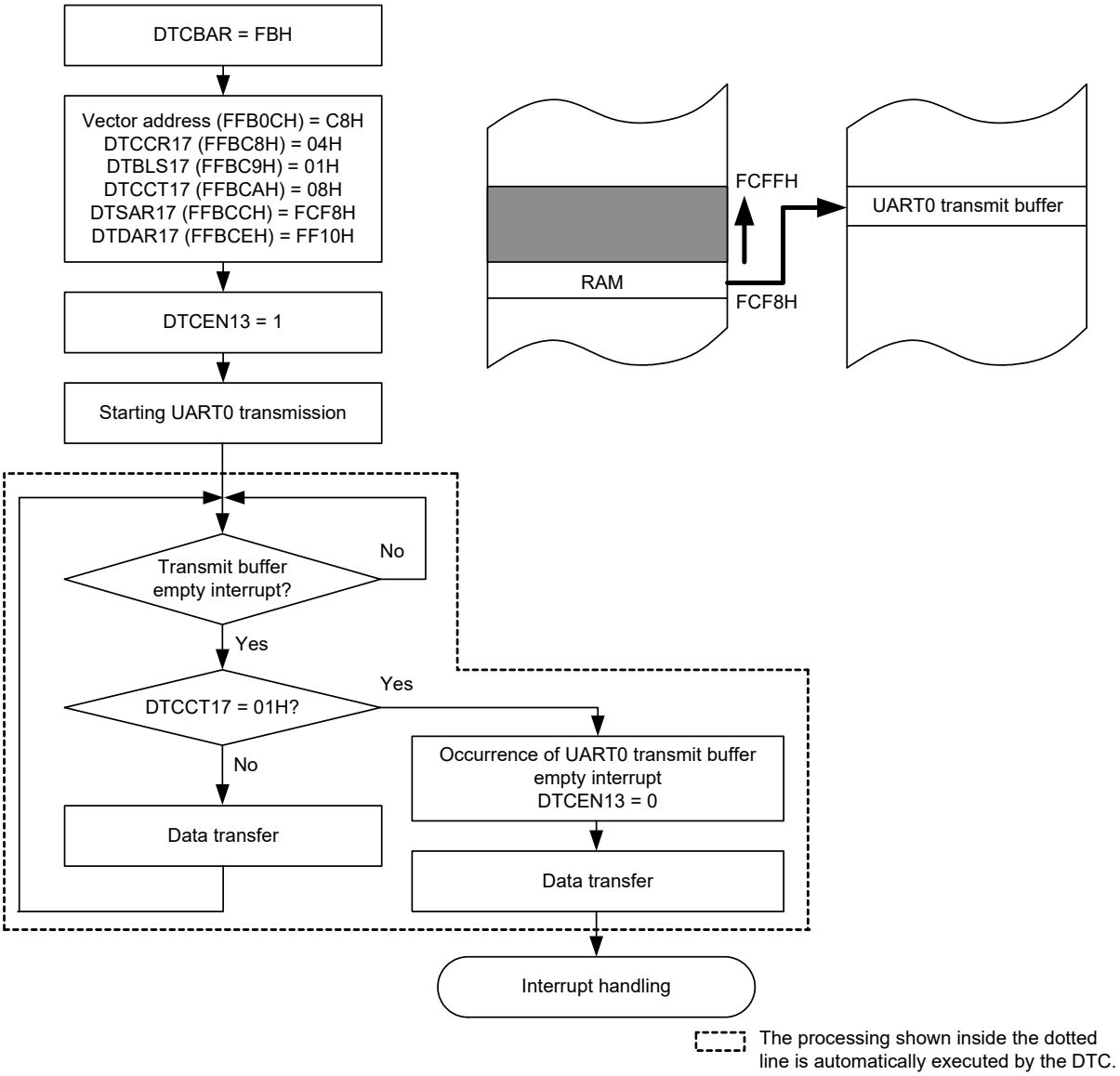

The value of the DTRLD17 register is not used because of normal mode, but initialize the register to 00H when parity error resets are enabled (RPERDIS = 0) using the RAM parity error detection function.

Start the first UART0 transmission by software. The second and subsequent transmissions are automatically sent when the DTC is activated by a transmit buffer empty interrupt.

22.4.3 Repeat Mode

One to 255 bytes of data are transferred by one activation. Either of the transfer source or destination should be specified as the repeat area. The number of transfers can be 1 to 255 times. On completion of the specified number of transfers, the DTCCTj (i = 0 to 23) register and the address specified for the repeat area are initialized to continue transfers. When the data transfer causing the DTCCTj register value to change to 0 is performed while the RPTINT bit in the DTCCRj register is 1 (interrupt generation enabled), the DTC generates an interrupt request corresponding to the activation source to the interrupt controller during DTC operation, and sets the corresponding bit among bits DTCENi0 to DTCENi7 to 0 (activation disabled). When the RPTINT bit in the DTCCRj register is 0 (interrupt generation disabled), no interrupt request is generated even if the data transfer causing the DTCCTj register value to change to 0 is performed. Also, bits DTCENi0 to DTCENi7 are not set to 0. Table 22 - 7 lists Register Functions in Repeat Mode. Figure 22 - 18 shows Data Transfers in Repeat Mode.

Table 22 - 7 Register Functions in Repeat Mode

Register Name	Symbol	Function
DTC block size register j	DTBLSj	Size of the data block to be transferred by one activation
DTC transfer count register j	DTCCTj	Number of data transfers
DTC transfer count reload register j	DTRLDj	This register value is reloaded to the DTCCT register (the number of transfers is initialized).
DTC source address register j	DTSARj	Data transfer source address
DTC destination address register j	DTDARj	Data transfer destination address

Remark j = 0 to 23

Figure 22 - 18 Data Transfers in Repeat Mode

DTCCTj register ≠ 1

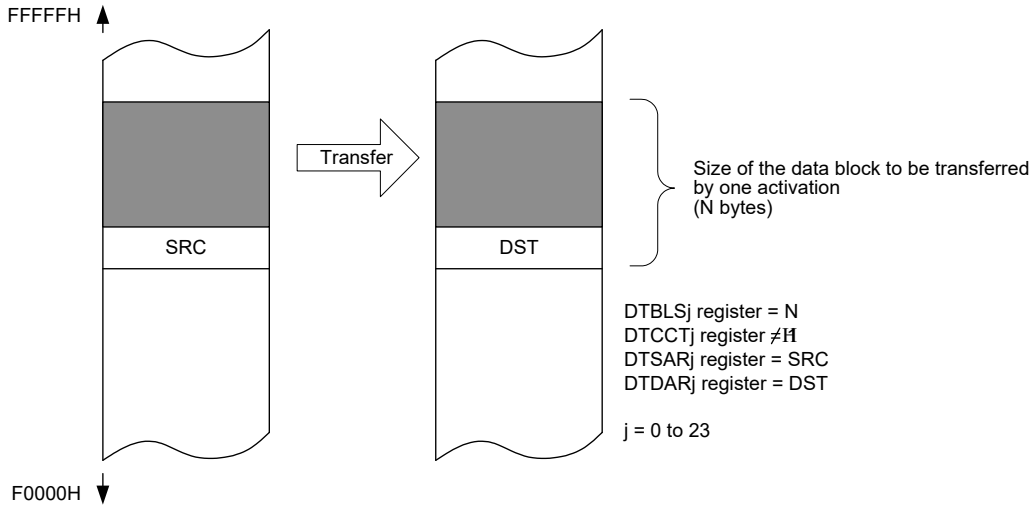

DTCCR Register Setting				Source Address Control	Destination Address Control	Source Address after Transfer	Destination Address after Transfer
DAMOD	SAMOD	RPTSEL	MODE				
0	X	1	1	Repeat area	Fixed	SRC + N	DST
1	X	1	1	Repeat area	Incremented	SRC + N	DST + N
X	0	0	1	Fixed	Repeat area	SRC	DST + N
X	1	0	1	Incremented	Repeat area	SRC + N	DST + N

X: 0 or 1

DTCCTj register = 1

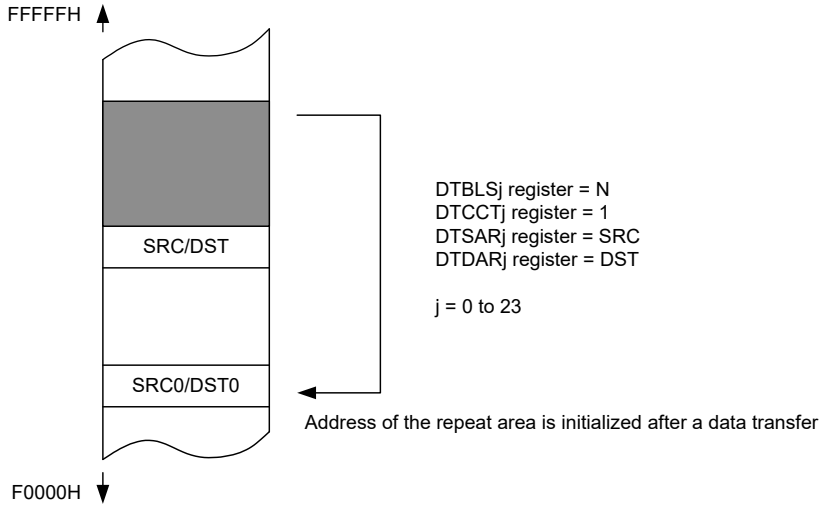

DTCCR Register Setting				Source Address Control	Destination Address Control	Source Address after Transfer	Destination Address after Transfer
DAMOD	SAMOD	RPTSEL	MODE				
0	X	1	1	Repeat area	Fixed	SRC0	DST
1	X	1	1	Repeat area	Incremented	SRC0	DST + N
X	0	0	1	Fixed	Repeat area	SRC	DST0
X	1	0	1	Incremented	Repeat area	SRC + N	DST0

SRC0: Initial source address value
DST0: Initial destination address value
X: 0 or 1

Caution 1. When repeat mode is used, the lower 8 bits of the initial value for the repeat area address must be 00H.

Caution 2. When repeat mode is used, the data size of the repeat area must be set to 255 bytes or less.

(1) Example 1 of using repeat mode: Outputting a stepping motor control pulse using ports

The DTC is activated using the interval timer function of channel 0 of timer array unit 0, and the pattern of the motor control pulse stored in the code flash memory is transferred to the general-purpose port.

- The vector address is FFC13H and control data is allocated at FFCD0H to FFCD7H
- Transfers 8-byte data of 02000H to 02007H of the code flash memory from the mirror area (F2000H to F2007H) to port register 1 (FFF01H)
- A repeat mode interrupt is disabled

Figure 22 - 19 Example 1 of using repeat mode: Outputting a stepping motor control pulse using ports

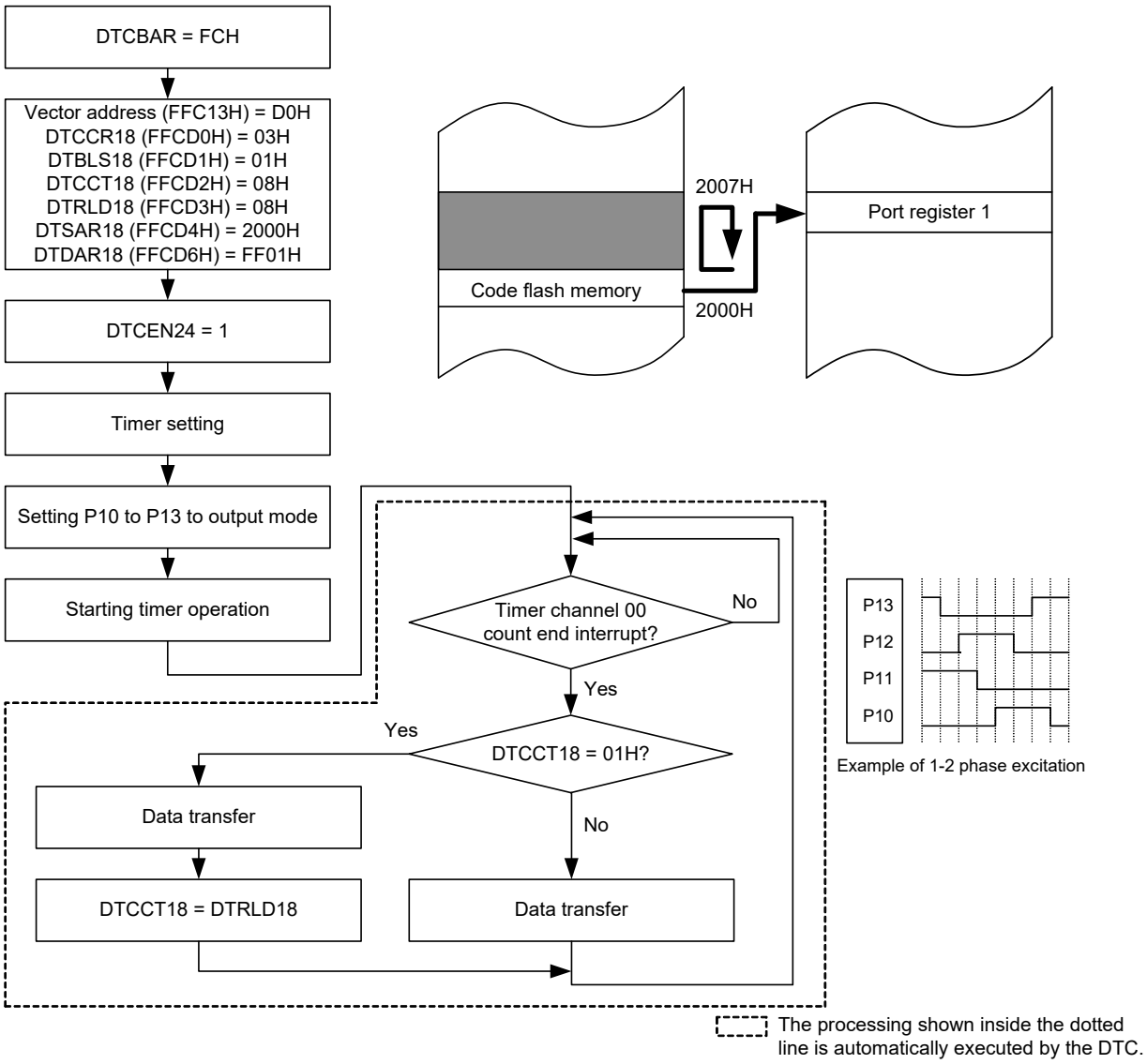

To stop the output, stop the timer first and then clear DTCEN24.

(2) Example 2 of using repeat mode: Outputting a sine wave using the 8-bit D/A converter

The DTC is activated using the interval timer function of channel 0 of timer array unit 1, and the table of the sine wave stored in the data flash memory is transferred to the 8-bit D/A conversion value setting register 0 (FFF34H).

The timer interval time is set to the D/A output setup time.

- The vector address is FFC17H and control data is allocated at FFCD8H to FFCDFH
- Transfers 255-byte data of F1200H to F12FEH of the data flash memory to the D/A conversion value setting register (FFF34H)
- A repeat mode interrupt is disabled

Figure 22 - 20 Example 2 of using repeat mode: Outputting a sine wave using the 8-bit D/A converter

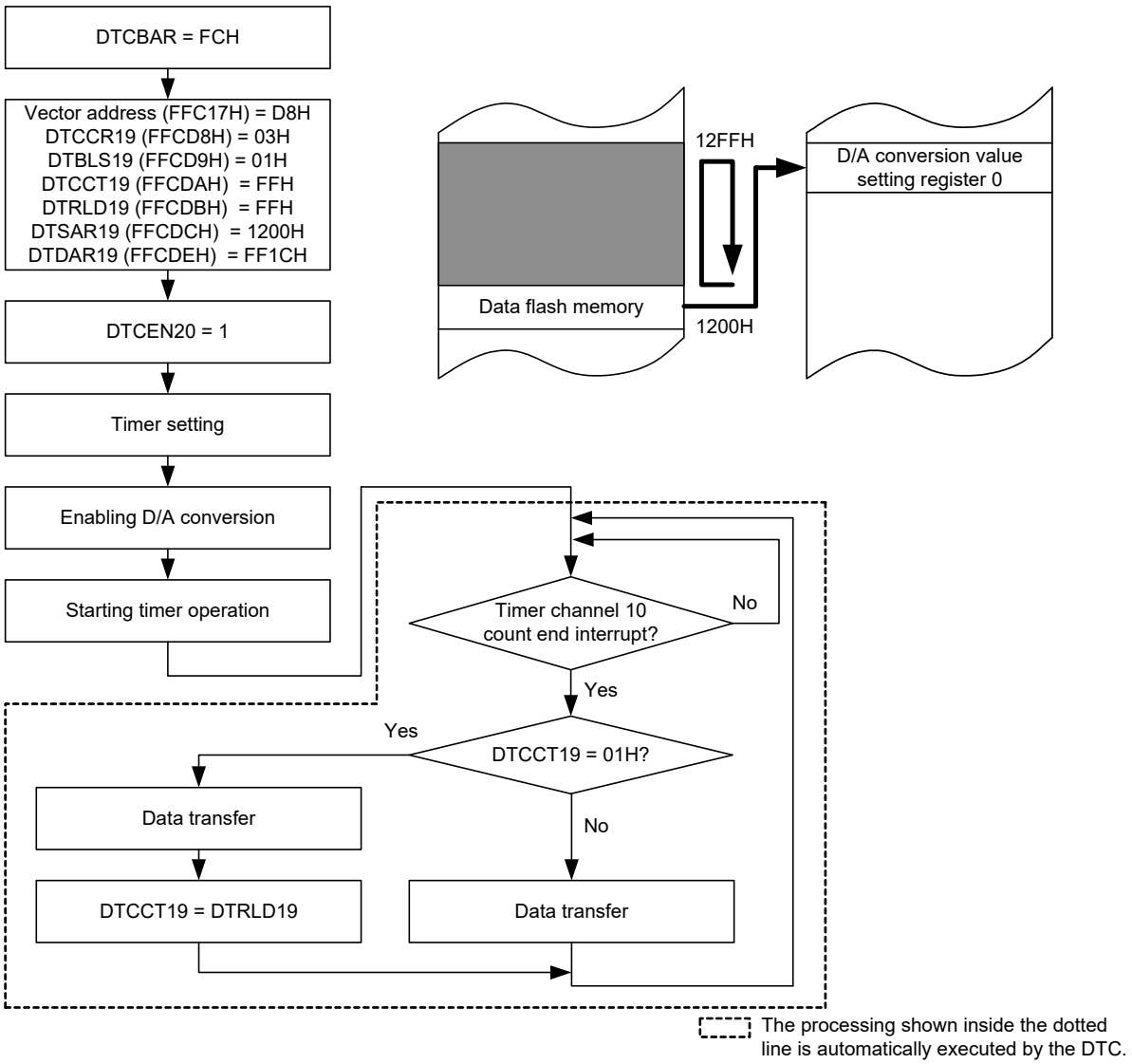

To stop the output, stop the timer first and then clear DTCEN20.

Caution A D/A converter is provided in products with 96 KB or more code flash memory.
Timer array unit 1 is provided in 80 and 100-pin products.

22.4.4 Chain Transfers

When the CHNE bit in the DTCCRj (j = 0 to 22) register is 1 (chain transfers enabled), multiple data transfers can be continuously performed by one activation source.

When the DTC is activated, one control data is selected according to the data read from the vector address corresponding to the activation source, and the selected control data is read from the DTC control data area. When the CHNE bit for the control data is 1 (chain transfers enabled), the next control data immediately following the current control data is read and transferred after the current transfer is completed. This operation is repeated until the data transfer with the control data for which the CHNE bit is 0 (chain transfers disabled) is completed.

When chain transfers are performed using multiple control data, the number of transfers set for the first control data is enabled, and the number of transfers set for the second and subsequent control data to be processed will be invalid.

Figure 22 - 21 shows Data Transfers during Chain Transfers.

Figure 22 - 21 Data Transfers during Chain Transfers

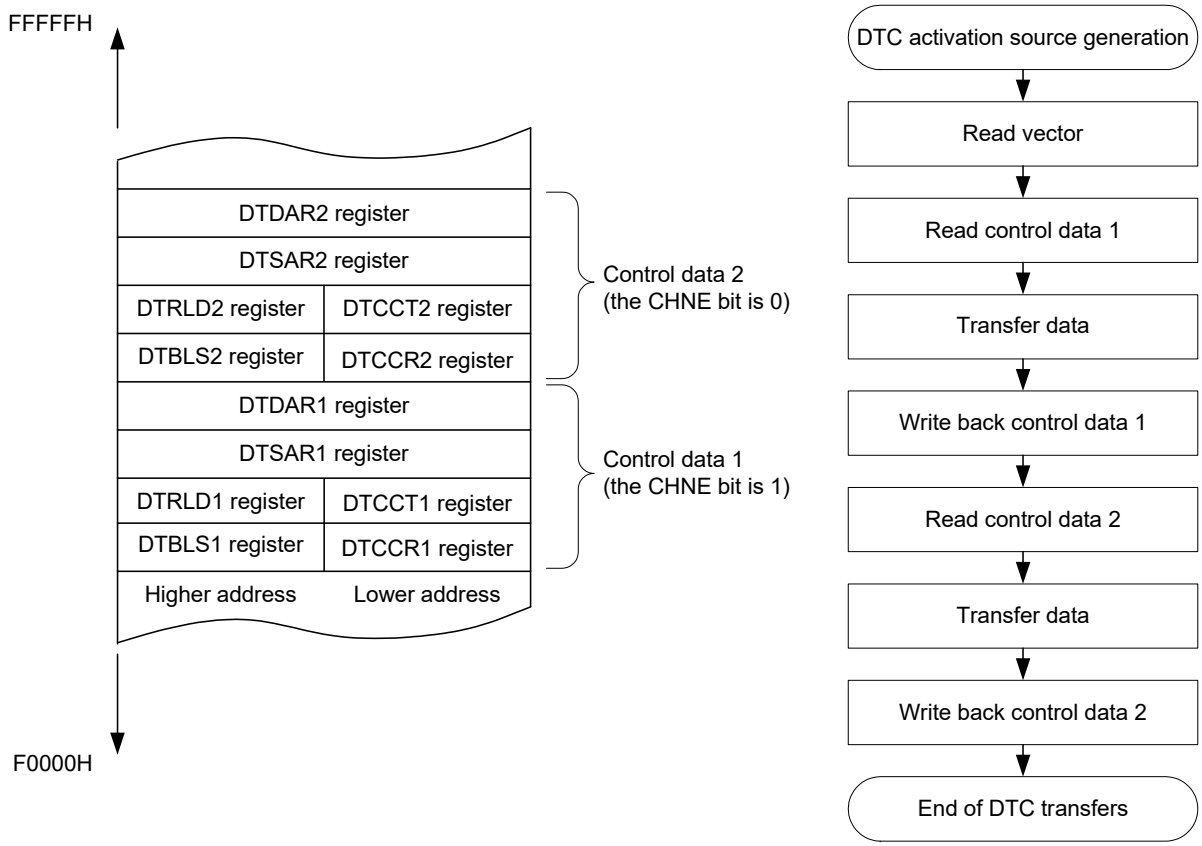

Note 1. Set the CHNE bit in the DTCCR23 register to 0 (chain transfers disabled).

Note 2. During chain transfers, bits DTCENi0 to DTCENi7 (i = 0 to 4) in the DTCENi register are not set to 0 (activation disabled) for the second and subsequent transfers. Also, no interrupt request is generated.

(1) Example of using chain transfers: Consecutively capturing A/D conversion results and UART0 transmission
The DTC is activated by an A/D conversion end interrupt and A/D conversion results are transferred to RAM, and then transmitted using the UART0.
- The vector address is FFB0AH
- Control data of capturing A/D conversion results is allocated at FFBA0H to FFBA7H
- Control data of UART0 transmission is allocated at FFBA8H at FFBAFH
- Transfers 2-byte data of the A/D conversion result register (FFF1FH, FFF1EH) to FFD80H to FFDCFH of RAM, and transfers the upper 1 byte (FFF1FH) of the A/D conversion result register to the UART transmit buffer (FFF10H)

Figure 22 - 22 Example of using chain transfers: Consecutively capturing A/D conversion results and UART0 transmission

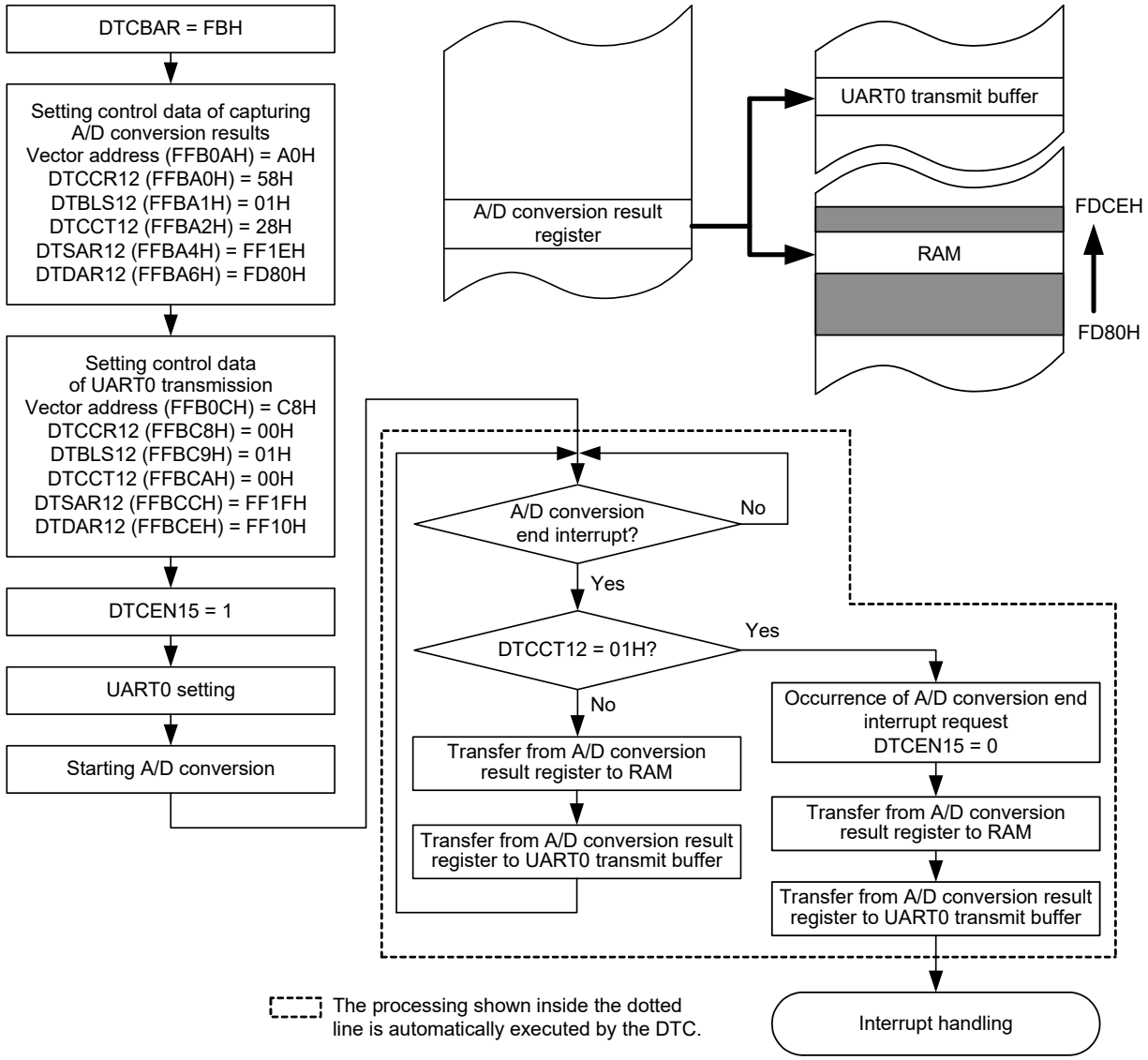

22.5 Cautions for DTC

22.5.1 Setting DTC Control Data and Vector Table

- Do not access the DTC extended special function register (2nd SFR), the DTC control data area, the DTC vector table area, or the general-register (FFEE0H to FFEFFH) space using a DTC transfer.
- Modify the DTC base address register (DTCBAR) while all DTC activation sources are set to activation disabled.
- Do not rewrite the DTC base address register (DTCBAR) twice or more.
- Modify the data of the DTCCRj, DTBLSj, DTCCTj, DTRLDj, DTSARj, or DTDARj register when the corresponding bit among bits DTCENi0 to DTCENi7 in the DTCENi (i = 0 to 4) register is 0 (activation disabled).
- Modify the start address of the DTC control data area to be set in the vector table when the corresponding bit among bits DTCENi0 to DTCENi7 in the DTCENi (i = 0 to 4) register is 0 (activation disabled).
- Do not allocate RAM addresses which are used as a DTC transfer destination/transfer source to the area FFE20H to FFEDFH when performing self-programming and rewriting the data flash memory.

22.5.2 Allocation of DTC Control Data Area and DTC Vector Table Area

The areas where the DTC control data and vector table can be allocated differ, depending on the usage conditions.

- It is prohibited to use the general-purpose register (FFEE0H to FFEFFH) space as the DTC control data area or DTC vector table area.
- Make sure the stack area, the DTC control data area, and the DTC vector table area do not overlap.
- The internal RAM area (FE900H-FED09H) cannot be used as the DTC control data area or DTC vector table area when using the self-programming and data-flash functions.
- Initialize the DTRLD register to 00H even in normal mode when parity error resets are enabled (RPERDIS = 0) using the RAM parity error detection function.

22.5.3 DTC Pending Instruction

Even if a DTC transfer request is generated, DTC transfer is held pending immediately after the following instructions. Also, the DTC is not activated between PREFIX instruction code and the instruction immediately after that code.

- Call/return instruction
- Unconditional branch instruction
- Conditional branch instruction
- Read access instruction for code flash memory
- Bit manipulation instructions for IFxx, MKxx, PRxx, and PSW, and an 8-bit manipulation instruction that has the ES register as operand
- Instruction for accessing the data flash memory
- Instruction of Multiply, Divide, Multiply & Accumulate (excluding MULU)

Caution 1. When a DTC transfer request is acknowledged, all interrupt requests are held pending until DTC transfer is completed.

Caution 2. While the DTC is held pending by the DTC pending instruction, all interrupt requests are held pending.

22.5.4 Operation when Accessing Data Flash Memory Space

When accessing the data flash space after an instruction execution from the start of DTC data transfer, a wait of three clock cycles will be inserted to the next instruction.

```
Instruction 1
DTC data transfer
Instruction ←  The wait of three clock cycles occurs.
MOV A,         ! Data Flash space
```

22.5.5 Number of DTC Execution Clock Cycles

Table 22 - 8 lists the Operations Following DTC Activation and Required Number of Cycles for each operation.

Table 22 - 8 Operations Following DTC Activation and Required Number of Cycles

Vector Read	Control Data		Data Read	Data Write
	Read	Write-back		
1	4	Note 1	Note 2	Note 2

Note 1. For the number of clock cycles required for control data write-back, refer to **Table 22 - 9 Number of Clock Cycles Required for Control Data Write-Back Operation**.

Note 2. For the number of clock cycles required for data read/write, refer to **Table 22 - 10 Number of Clock Cycles Required for One Data Read/Write Operation**.

Table 22 - 9 Number of Clock Cycles Required for Control Data Write-Back Operation

DTCCR Register Setting				Address Setting		Control Register to be Written Back				Number of Clock Cycles
DAMOD	SAMOD	RPTSEL	MODE	Source	Destination	DTCCTj Register	DTRLDj Register	DTSARj Register	DTDARj Register	
0	0	X	0	Fixed	Fixed	Written back	Written back	Not written back	Not written back	1
0	1	X	0	Incremented	Fixed	Written back	Written back	Written back	Not written back	2
1	0	X	0	Fixed	Incremented	Written back	Written back	Not written back	Written back	2
1	1	X	0	Incremented	Incremented	Written back	Written back	Written back	Written back	3
0	X	1	1	Repeat area	Fixed	Written back	Written back	Written back	Not written back	2
1	X	1	1		Incremented	Written back	Written back	Written back	Written back	3
X	0	0	1	Fixed	Repeat area	Written back	Written back	Not written back	Written back	2
X	1	0	1	Incremented		Written back	Written back	Written back	Written back	3

Remark j = 0 to 23; X: 0 or 1

Table 22 - 10 Number of Clock Cycles Required for One Data Read/Write Operation

Operation	RAM	Code Flash Memory	Data Flash Memory	Special function register (SFR)	Extended special function register (2nd SFR)	
					No Wait State	Wait States
Data read	1	2	4	1	1	1 + number of wait states Note
Data write	1	—	—	1	1	1 + number of wait states Note

Note The number of wait states differs depending on the specifications of the register allocated to the extended special function register (2nd SFR) to be accessed.

22.5.6 DTC Response Time

Table 22 - 11 lists the DTC Response Time. The DTC response time is the time from when the DTC activation source is detected until DTC transfer starts. It does not include the number of DTC execution clocks.

Table 22 - 11 DTC Response Time

	Minimum Time	Maximum Time
Response Time	3 clocks	19 clocks

Note that the response from the DTC may be further delayed under the following cases. The number of delayed clock cycles differs depending on the conditions.

- When executing an instruction from the internal RAM
  Maximum response time: 20 clocks
- When executing a DTC pending instruction (refer to **22.5.3 DTC Pending Instruction**)
- Maximum response time: Maximum response time for each condition + execution clock cycles for the instruction to be held pending under the condition.
- When accessing the TRJ0 register that a wait occurs
  Maximum response time: Maximum response time for each condition + 1 clock

Remark 1 clock: 1/f_{CLK} (f_{CLK}: CPU/peripheral hardware clock)

22.5.7 DTC Activation Sources

- After inputting a DTC activation source, do not input the same activation source again until DTC transfer is completed.
- While a DTC activation source is generated, do not manipulate the DTC activation enable bit corresponding to the source.
- If DTC activation sources conflict, their priority levels are determined in order to select the source for activation when the CPU acknowledges the DTC transfer. For details on the priority levels of activation sources, refer to **22.3.3 Vector Table**.
- When DTC activation is enabled under either of the following conditions, a DTC transfer is started and an interrupt is generated after completion of the transfer. Therefore, enable DTC activation after confirming the comparator monitor flag (CnMON) as necessary. (n = 0, 1)
  - The comparator [Note] is set to an interrupt request on one-edge detection (CnEDG = 0), an interrupt request at the rising edge for the comparator, and IVCMP > IVREF (or internal reference voltage: 1.45 V)
  - The comparator [Note] is set to an interrupt request on one-edge detection (CnEDG = 0), an interrupt request at the falling edge for the comparator, and IVCMP < IVREF (or internal reference voltage: 1.45 V)

Note A comparator is provided in products with 96 KB or more code flash memory.

22.5.8 Operation in Standby Mode Status

Status	DTC Operation
HALT mode	Operable (Operation is disabled while in the low power consumption RTC mode)
STOP mode	DTC activation sources can be accepted Note 2
SNOOZE mode	Operable Notes 1, 3, 4, 5

Note 1. The SNOOZE mode can only be specified when the high-speed on-chip oscillator clock is selected as f_{CLK}.

Note 2. In the STOP mode, detecting a DTC activation source enables transition to SNOOZE mode and DTC transfer. After completion of transfer, the system returns to the STOP mode. However, since the code flash memory and the data flash memory are stopped during the SNOOZE mode, the flash memory cannot be set as the transfer source.

Note 3. When a transfer end interrupt is set as a DTC activation source from the CSIp SNOOZE mode function, release the SNOOZE mode using the transfer end interrupt to start CPU processing after completion of DTC transfer, or use a chain transfer to set CSIp reception again (writing 1 to the STm0 bit, writing 0 to the SWCm bit, setting of the SSCm register, and writing 1 to the SSm0 bit).

Note 4. When a transfer end interrupt is set as a DTC activation source from the UARTq SNOOZE mode function, release the SNOOZE mode using the transfer end interrupt to start CPU processing after completion of DTC transfer, or use a chain transfer to set UARTq reception again (writing 1 to the STm1 bit, writing 0 to the SWCm bit, setting of the SSCm register, and writing 1 to the SSm1 bit).

Note 5. When an A/D conversion end interrupt is set as a DTC activation source from the A/D converter SNOOZE mode function, release the SNOOZE mode using the A/D conversion end interrupt to start CPU processing after completion of DTC transfer, or use a chain transfer to set the A/D converter SNOOZE mode function again (writing 0 to the AWC bit and then writing 1 to the AWC bit).

Remark 30 to 64-pin products: p = 00; q = 0; m = 0
80, 100-pin products: p = 00, 20; q = 0, 2; m = 0, 1

CHAPTER 23 EVENT LINK CONTROLLER (ELC)

23.1 Functions of ELC

The event link controller (ELC) mutually connects (links) events output from each peripheral function. By linking events, it becomes possible to coordinate operation between peripheral functions directly without going through the CPU.

The ELC has the following functions.

- Capable of directly linking event signals from 22 types (for 48- and 64-pin products) or 21 types (for 24-, 32-, and 36-pin products) of peripheral functions to specified peripheral functions
- Event signals can be used as activation sources for operating any one of 10 types of peripheral functions

23.2 Configuration of ELC

Figure 23 - 1 shows the ELC Block Diagram.

Figure 23 - 1 ELC Block Diagram

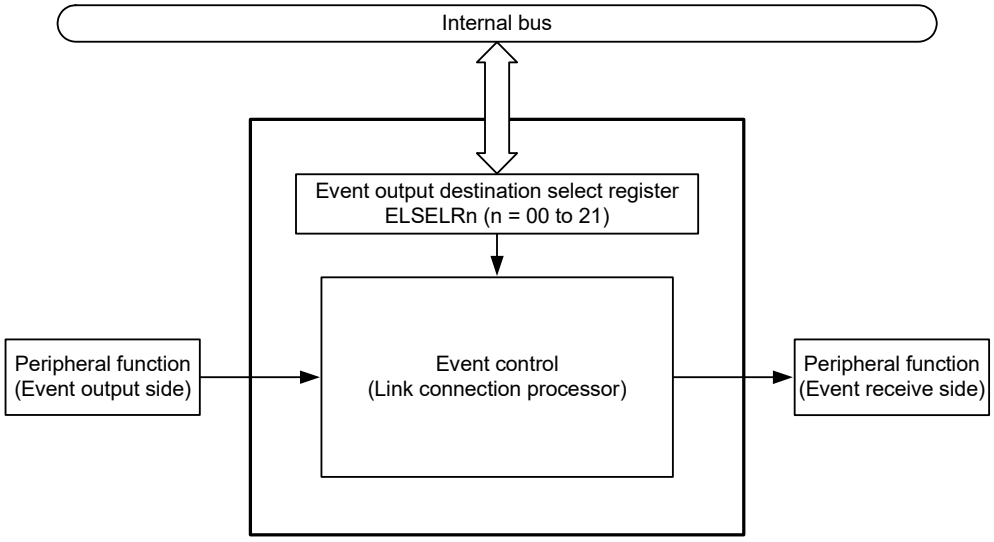

23.3 Registers Controlling ELC

Table 23 - 1 lists the Registers Controlling ELC.

Table 23 - 1 Registers Controlling ELC

Register name	Symbol
Event output destination select register 00	ELSELR00
Event output destination select register 01	ELSELR01
Event output destination select register 02	ELSELR02
Event output destination select register 03	ELSELR03
Event output destination select register 04	ELSELR04
Event output destination select register 05	ELSELR05
Event output destination select register 06	ELSELR06
Event output destination select register 07	ELSELR07
Event output destination select register 08	ELSELR08
Event output destination select register 09	ELSELR09
Event output destination select register 10	ELSELR10
Event output destination select register 11	ELSELR11
Event output destination select register 12	ELSELR12
Event output destination select register 13	ELSELR13
Event output destination select register 14	ELSELR14
Event output destination select register 15	ELSELR15
Event output destination select register 16	ELSELR16
Event output destination select register 17	ELSELR17
Event output destination select register 18	ELSELR18
Event output destination select register 19	ELSELR19
Event output destination select register 20	ELSELR20
Event output destination select register 21	ELSELR21

23.3.1 Event output destination select register n (ELSELRn) (n = 00 to 21)

An ELSELRn register links each event signal to an operation of an event-receiving peripheral function (link destination peripheral function) after reception.

Do not set multiple event inputs to the same event output destination (event receive side). The operation of the event-receiving peripheral function will become undefined, and event signals may not be received correctly. In addition, do not set the event link generation source and the event link output destination to the same function.

Set an ELSELRn register during a period when no event output peripheral functions are generating event signals.

Table 23 - 2 lists the Correspondence Between ELSELRn (n = 00 to 21) Registers and Peripheral Functions, and Table 23 - 3 lists the Correspondence Between Values Set to ELSELRn (n = 00 to 21) Registers and Operation of Link Destination Peripheral Functions at Reception.

Figure 23 - 2 Format of Event output destination select register n (ELSELRn)

Address: F0300H (ELSELR00) to F0315H (ELSELR22) After reset: 00H R/W

Symbol	7	6	5	4	3	2	1	0
ELSELRn	0	0	0	0	ELSELn3	ELSELn2	ELSELn1	ELSELn0

ELSELn3	ELSELn2	ELSELn1	ELSELn0	Event Link Selection
0	0	0	0	Event link disabled
0	0	0	1	Select operation of peripheral function 1 to link Note 1
0	0	1	0	Select operation of peripheral function 2 to link Note 1
0	0	1	1	Select operation of peripheral function 3 to link Note 1
0	1	0	0	Select operation of peripheral function 4 to link Note 1
0	1	0	1	Select operation of peripheral function 5 to link Note 1
0	1	1	0	Select operation of peripheral function 6 to link Note 1
0	1	1	1	Select operation of peripheral function 7 to link Note 1
1	0	0	0	Select operation of peripheral function 8 to link Note 1
1	0	0	1	Select operation of peripheral function 9 to link Note 1
1	0	1	0	Select operation of peripheral function 10 to link Note 1
Other than above				Setting prohibited

Note 1. See **Table 23 - 3 Correspondence Between Values Set to ELSELRn (n = 00 to 21) Registers and Operation of Link Destination Peripheral Functions at Reception**.

Table 23 - 2 Correspondence Between ELSELRn (n = 00 to 21) Registers and Peripheral Functions

Register Name	Event Generator (Output Origin of Event Input n)	Event Description
ELSELR00	External interrupt edge detection 0	INTP0
ELSELR01	External interrupt edge detection 1	INTP1
ELSELR02	External interrupt edge detection 2	INTP2
ELSELR03	External interrupt edge detection 3	INTP3
ELSELR04	External interrupt edge detection 4	INTP4
ELSELR05	External interrupt edge detection 5	INTP5
ELSELR06[Note 1]	Key return signal detection	INTKR
ELSELR07	RTC fixed-cycle signal/Alarm match detection	INTRTC
ELSELR08	Timer RD0 input capture A/compare match A	INTTRD0
ELSELR09	Timer RD0 input capture B/compare match B	INTTRD0
ELSELR10	Timer RD1 input capture A/compare match A	INTTRD1
ELSELR11	Timer RD1 input capture B/compare match B	INTTRD1
ELSELR12	Timer RD1 underflow	TRD1 underflow signal
ELSELR13	Timer RJ0 underflow/end of pulse width measurement period/end of pulse period measurement period	INTTRJ0
ELSELR14	Timer RG input capture A/compare match A	INTTRG
ELSELR15	Timer RG input capture B/compare match B	INTTRG
ELSELR16	TAU channel 00 count end/capture end	INTTM00
ELSELR17	TAU channel 01 count end/capture end	INTTM01
ELSELR18	TAU channel 02 count end/capture end	INTTM02
ELSELR19	TAU channel 03 count end/capture end	INTTM03
ELSELR20	Comparator detection 0	INTCMP0
ELSELR21	Comparator detection 1	INTCMP1

Note 1. For 48-, 64-pin products only.

Table 23 - 3 Correspondence Between Values Set to ELSELRn (n = 00 to 21) Registers and Operation of Link Destination Peripheral Functions at Reception

Bits ELSELn3 to ELSELn0 in ELSELRn Register	Link Destination Number	Link Destination Peripheral Function	Operation When Receiving Event
0001B	1	A/D converter	A/D conversion starts
0010B	2	Timer input of timer array unit 0 channel 0 Note 1	Delay counter, input pulse interval measurement, external event counter
0011B	3	Timer input of timer array unit 0 channel 1 Note 2	Delay counter, input pulse interval measurement, external event counter
0100B	4	Timer RJ0	Count source
0101B	5	Timer RG	TRGIOB input capture
0110B	6	Timer RD0	TRDIOD0 input capture, pulse output forced cutoff
0111B	7	Timer RD1	TRDIOD1 input capture, pulse output forced cutoff
1000B	8	DA0 Note 3	Real-time output
1001B	9	DA1 Note 3	Real-time output (32-, 36-, 48-, 64-pin products only.)
1010B	10	PWMOPA	Pulse output forced cutoff

Note 1. To select the timer input of timer array unit 0 channel 0 as the link destination peripheral function, set the operating clock for channel 0 to f_{CLK} using timer clock select register 0 (TPS0), set the noise filter of the TI00 pin to OFF (TNFEN00 = 0) using noise filter enable register 1 (NFEN1), and then set the timer output used for channel 0 to an event input signal from the ELC using timer I/O select register 0 (TIOS0).

Note 2. To select the timer input of timer array unit 0 channel 1 as the link destination peripheral function, set the operating clock for channel 1 to f_{CLK} using timer clock select register 0 (TPS0), set the noise filter of the TI01 pin to OFF (TNFEN01 = 0) using noise filter enable register 1 (NFEN1), and then set the timer output used for channel 1 to an event input signal from the ELC using timer I/O select register 0 (TIOS0).

Note 3. When entering the STOP mode while the real-time output event mode for D/A conversion is enabled, disable linking of ELC events before entering STOP mode.

23.4 ELC Operation

The path for using an event signal generated by a peripheral function as an interrupt request to the interrupt control circuit is independent from the path for using it as an ELC event. Therefore, each event signal can be used as an event signal for operation of an event-receiving peripheral function, regardless of interrupt control.

Figure 23 - 3 shows the Relationship Between Interrupt Handling and ELC. The figure show an example of an interrupt request status flag and a peripheral function possessing the enable bits that control enabling/disabling of such interrupts.

A peripheral function which receives an event from the ELC will perform the operation corresponding to the event-receiving peripheral function after reception of an event (See **Table 23 - 3 Correspondence Between Values Set to ELSELRn (n = 00 to 21) Registers and Operation of Link Destination Peripheral Functions at Reception**).

Figure 23 - 3 Relationship Between Interrupt Handling and ELC

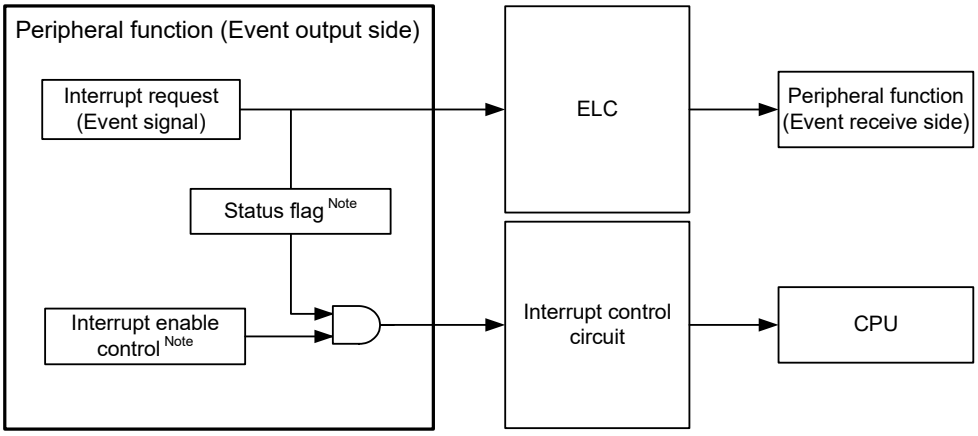

Note Not available depending on the peripheral function.

Table 23 - 4 lists the Response of Peripheral Functions That Receive Events.

Table 23 - 4 Response of Peripheral Functions That Receive Events

Event Receiver No.	Event Link Destination Function	Operation after Event Reception	Response
1	A/D converter	A/D conversion	An event from the ELC is directly used as a hardware trigger of A/D conversion.
2	Timer array unit 0 Timer input of channel 0	Delay counter Input pulse width measurement External event counter	The edge is detected 3 or 4 cycles of f_{CLK} after an ELC event is generated.
3	Timer array unit 0 Timer input of channel 1	Delay counter Input pulse width measurement External event counter	The edge is detected 3 or 4 cycles of f_{CLK} after an ELC event is generated.
4	Timer RJ	Count source	An event from the ELC is directly used as the count source of timer RJ.
5	Timer RG	TRGIOB input capture	A count start trigger is generated 2 or 3 cycles of f_{CLK} after an ELC event is generated.
6	Timer RD0	TRDIOD0 input capture	A count start trigger is generated 2 or 3 cycles of the timer RD operating clock after an ELC event is generated.
		Pulse output forced cutoff	The pulse is forcibly cut off 2 or 3 cycles of the timer RD operating clock after an ELC event is generated.
7	Timer RD1	TRDIOD1 input capture	A count start trigger is generated 2 or 3 cycles of the timer RD operating clock after an ELC event is generated.
		Pulse output forced cutoff	The pulse is forcibly cut off 2 or 3 cycles of the timer RD operating clock after an ELC event is generated.
8	Channel 0 of D/A converter	Real-time output (channel 0)	To synchronize asynchronous events from ELC, receive the event during the period (1 cycle or more and less than 2 cycles), and start the D/A conversion operation in the next cycle.
9	Channel 1 of D/A converter	Real-time output (channel 1)	To synchronize asynchronous events from ELC, receive the event during the period (1 cycle or more and less than 2 cycles), and start the D/A conversion operation in the next cycle..
10	PWMOPA	Pulse output forced cutoff	To synchronize asynchronous events from ELC, receive the event during the period (1 cycle or more and less than 2 cycles), and start the pulse output forced cutoff operation in the next cycle.

CHAPTER 24 INTERRUPT FUNCTIONS

The interrupt function switches the program execution to other processing. When the branch processing is finished, the program returns to the interrupted processing.
The number of interrupt sources differs, depending on the product.

		24-pin	32-pin	36-pin	48-pin	64-pin
Maskable interrupts	External	9	11	10	12	13
	Internal	25	25	25	25	25

24.1 Interrupt Function Types

The following two types of interrupt functions are used.

(1) Maskable interrupts
These interrupts undergo mask control. Maskable interrupts can be divided into four priority groups by setting the priority specification flag registers (PR00L, PR00H, PR01L, PR01H, PR02L, PR02H, PR10L, PR10H, PR11L, PR11H, PR12L, PR12H).
Multiple interrupt servicing can be applied to low-priority interrupts when high-priority interrupts are generated. If two or more interrupt requests, each having the same priority, are simultaneously generated, then they are processed according to the default priority of vectored interrupt servicing. Default priority, see **Tables 24 - 1** to **24 - 3**.
A standby release signal is generated and STOP, HALT, and SNOOZE modes are released.
External interrupt requests and internal interrupt requests are provided as maskable interrupts.

(2) Software interrupt
This is a vectored interrupt generated by executing the BRK instruction. It is acknowledged even when interrupts are disabled. The software interrupt does not undergo interrupt priority control.

24.2 Interrupt Sources and Configuration

Interrupt sources include maskable interrupts and software interrupts. In addition, they also have up to seven reset sources (see **Tables 24 - 1** to **24 - 3**). The vector codes that store the program start address when branching due to the generation of a reset or various interrupt requests are two bytes each, so interrupts jump to a 64 K address of 00000H to 0FFFFH.

Table 24 - 1 Interrupt Source List (1/3)

Interrupt Type	Default Priority Note 1	Interrupt Source		Internal/External	Vector Table Address	Basic Configuration Type Note 2	64-pin	48-pin	36-pin	32-pin	24-pin
		Name	Trigger								
Maskable	0	INTWDTI	Watchdog timer interval Note 3 (75% of overflow time + 1/2 f_{IL})	Internal	00004H	(A)	√	√	√	√	√
	1	INTLVI	Voltage detection Note 4		00006H		√	√	√	√	√
	2	INTP0	Pin input edge detection	External	00008H	(B)	√	√	√	√	√
	3	INTP1			0000AH		√	√	√	√	√
	4	INTP2			0000CH		√	√	√	√	√
	5	INTP3			0000EH		√	√	√	√	√
	6	INTP4			00010H		√	√	√	√	√
	7	INTP5			00012H		√	√	√	√	√
	8	INTST2/ INTCSI20/ INTIIC20	UART2 transmission transfer end or buffer empty interrupt/CSI20 transfer end or buffer empty interrupt/IIC20 transfer end	Internal	00014H	(A)	√	√	√	√	√
	9	INTSR2/ INTCSI21/ INTIIC21	UART2 reception transfer end/CSI21 transfer end or buffer empty interrupt/IIC21 transfer end		00016H		√	√	Note 5	Note 5	Note 5
	10	INTSRE2	UART2 reception communication error occurrence		00018H		√	√	√	√	√
	11	INTST0/ INTCSI00/ INTIIC00	UART0 transmission transfer end or buffer empty interrupt/CSI00 transfer end or buffer empty interrupt/IIC00 transfer end		0001EH		√	√	√	√	√
	12	INTSR0/ INTCSI01/ INTIIC01	UART0 reception transfer end/CSI01 transfer end or buffer empty interrupt/IIC01 transfer end		00020H		√	√	Note 6	Note 6	Note 6
	13	INTSRE0	UART0 reception communication error occurrence		00022H		√	√	√	√	√
		INTTM01H	End of timer channel 01 count or capture (at higher 8-bit timer operation)				√	√	√	√	√

Note 1. The default priority determines the sequence of interrupts if two or more maskable interrupts occur simultaneously. Zero indicates the highest priority and 37 indicates the lowest priority.

Note 2. Basic configuration types (A) to (D) correspond to (A) to (D) in **Figure 24 - 1**.

Note 3. When bit 7 (WDTINT) of the option byte (000C0H) is set to 1.

Note 4. When bit 7 (LVIMD) of the voltage detection level register (LVIS) is cleared to 0.

Note 5. INTSR2 only.

Note 6. INTSR0 only.

Table 24 - 2 Interrupt Source List (2/3)

Interrupt Type	Default Priority Note 1	Interrupt Source		Internal/External	Vector Table Address	Basic Configuration Type Note 2	64-pin	48-pin	36-pin	32-pin	24-pin
		Name	Trigger								
Maskable	14	INTST1/ INTCSI10/ INTIIC10	UART1 transmission transfer end or buffer empty interrupt/CSI10 transfer end or buffer empty interrupt/IIC10 transfer end	Internal	00024H	(A)	√	Note 3	Note 3	Note 3	Note 3
	15	INTSR1/ INTCSI11/ INTIIC11	UART1 reception transfer end/CSI11 transfer end or buffer empty interrupt/IIC11 transfer end		00026H		√	√	√	√	√
	16	INTSRE1	UART1 reception communication error occurrence		00028H		√	√	√	√	√
		INTTM03H	End of timer channel 03 count or capture (at higher 8-bit timer operation)				√	√	√	√	√
	17	INTIICA0	End of IICA0 communication		0002AH		√	√	√	√	√
	18	INTTM00	End of timer channel 00 count or capture		0002CH		√	√	√	√	√
	19	INTTM01	End of timer channel 01 count or capture		0002EH		√	√	√	√	√
	20	INTTM02	End of timer channel 02 count or capture		00030H		√	√	√	√	√
	21	INTTM03	End of timer channel 03 count or capture		00032H		√	√	√	√	√
	22	INTAD	End of A/D conversion		00034H		√	√	√	√	√
	23	INTRTC	Fixed-cycle signal of real-time clock/alarm match detection		00036H		√	√	√	√	√
	24	INTIT	Interval signal detection		00038H		√	√	√	√	√
	25	INTKR	Key return signal detection	External	0003AH	(C)	√	√	√	√	√
	26	INTTRJ0	Timer RJ interrupt	Internal	00040H		√	√	√	√	√

Note 1. The default priority determines the sequence of interrupts if two or more maskable interrupts occur simultaneously. Zero indicates the highest priority and 37 indicates the lowest priority.

Note 2. Basic configuration types (A) to (D) correspond to (A) to (D) in **Figure 24 - 1**.

Note 3. INTST1 only.

Table 24 - 3 Interrupt Source List (3/3)

Interrupt Type	Default Priority Note 1	Interrupt Source		Internal/ External	Vector Table Address	Basic Configuration Type Note 2	64-pin	48-pin	36-pin	32-pin	24-pin
		Name	Trigger								
Maskable	27	INTP6	Pin input edge detection	External	0004AH	(B)	√	√	√	√	—
	28	INTP7			0004CH		√	—	—	√	—
	29	INTP8			0004EH		√	√	√	√	√
	30	INTP9			00050H		√	√	—	—	—
	31	INTP10	Pin input edge detection	External	00052H		√	√	√	√	√
		INTCMP0	Comparator detection 0	Internal			√	√	√	√	√
	32	INTP11	Pin input edge detection	External	00054H		√	√	√	√	√
		INTCMP1	Comparator detection 1	Internal			√	√	√	√	√
	33	INTTRD0	Timer RD0 input capture, compare match, overflow, underflow interrupt	Internal	00056H	(A)	√	√	√	√	√
	34	INTTRD1	Timer RD1 input capture, compare match, overflow, underflow interrupt		00058H		√	√	√	√	√
	35	INTTRG	Timer RG input capture, compare match, overflow, underflow interrupt		0005AH		√	√	√	√	√
	36	INTSRE3	UART3 reception communication error occurrence		0005CH		—	—	—	—	—
	37	INTTM13H	End of timer channel 13 count or capture (at 8-bit timer operation)				—	—	—	—	—
		INTFL	Reserved Note 3		00062H		√	√	√	√	√
Software	—	BRK	Execution of BRK instruction	—	0007EH	(D)	√	√	√	√	√
Reset	—	RESET	$\overline{\text{RESET}}$ pin input	—	00000H	—	√	√	√	√	√
		POR	Power-on-reset				√	√	√	√	√
		LVD	Voltage detection Note 4				√	√	√	√	√
		WDT	Overflow of watchdog timer				√	√	√	√	√
		TRAP	Execution of illegal instruction Note 5				√	√	√	√	√
		IAW	Illegal-memory access				√	√	√	√	√
		RPE	RAM parity error				√	√	√	√	√

Note 1. The default priority determines the sequence of interrupts if two or more maskable interrupts occur simultaneously. Zero indicates the highest priority and 37 indicates the lowest priority.

Note 2. Basic configuration types (A) to (D) correspond to (A) to (D) in **Figure 24 - 1**.

Note 3. Be used at the flash self-programming library or the data flash library.

Note 4. When bit 7 (LVIMD) of the voltage detection level register (LVIS) is set to 1.

Note 5. When the instruction code in FFH is executed.
Reset by the illegal instruction execution not issued by emulation with the in-circuit emulator or on-chip debug emulator.

Figure 24 - 1 Basic Configuration of Interrupt Function

(A) Internal maskable interrupt

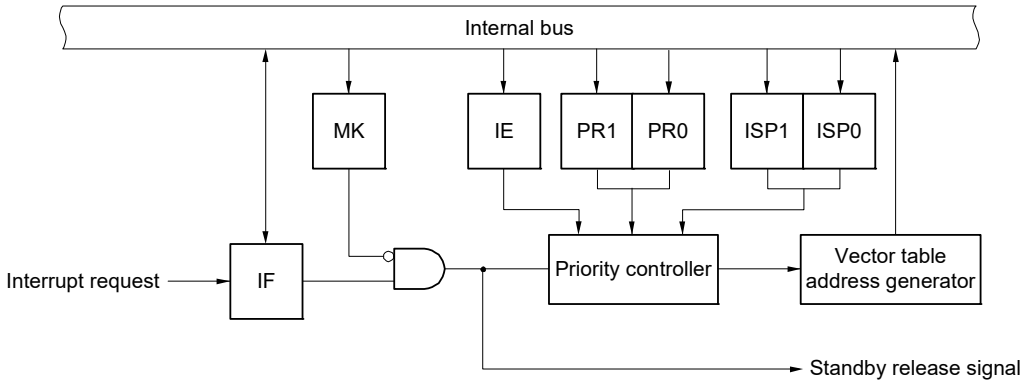

(B) External maskable interrupt (INTPn)

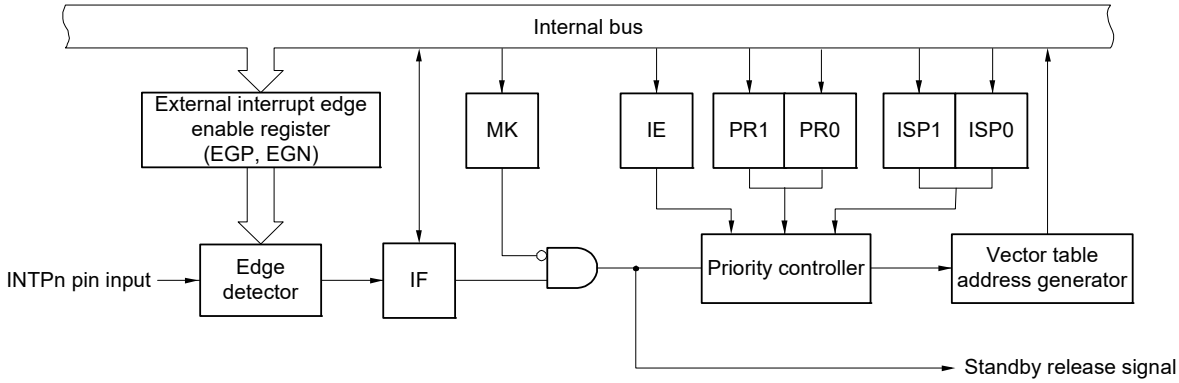

IF: Interrupt request flag
IE: Interrupt enable flag
ISP0: In-service priority flag 0
ISP1: In-service priority flag 1
MK: Interrupt mask flag
PR0: Priority specification flag 0
PR1: Priority specification flag 1

Remark 24-pin: n = 0 to 5, 8, 10, 11
32-pin: n = 0 to 8, 10, 11
36-pin: n = 0 to 6, 8, 10, 11
48-pin: n = 0 to 6, 8 to 11
64-pin: n = 0 to 11

(C) External maskable interrupt (INTKR)

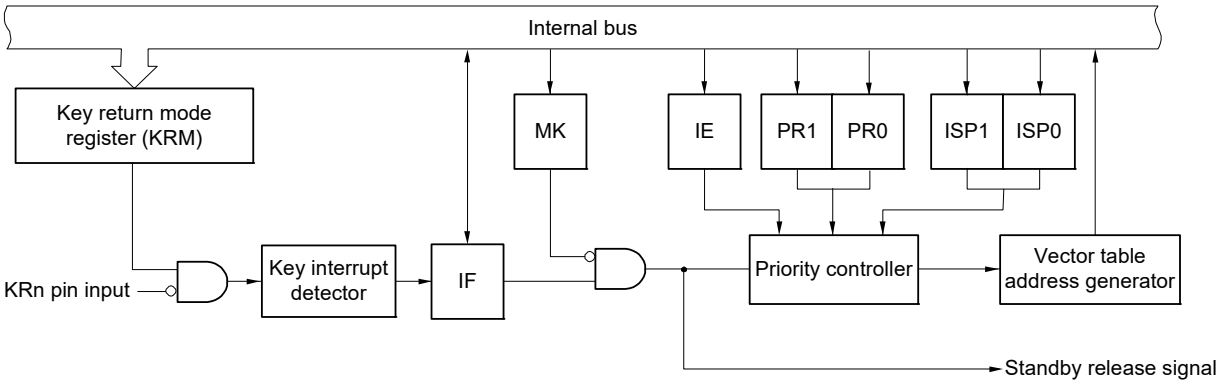

(D) Software interrupt

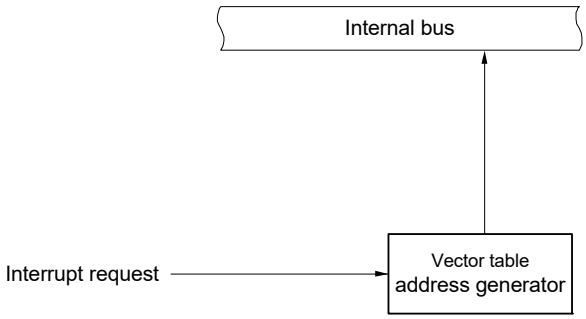

IF: Interrupt request flag
IE: Interrupt enable flag
ISP0: In-service priority flag 0
ISP1: In-service priority flag 1
MK: Interrupt mask flag
PR0: Priority specification flag 0
PR1: Priority specification flag 1

Remark 48-pin: n = 0 to 5
64-pin: n = 0 to 7

24.3 Registers Controlling Interrupt Functions

The following 6 types of registers are used to control the interrupt functions.

- Interrupt request flag registers (IF0L, IF0H, IF1L, IF1H, IF2L, IF2H)
- Interrupt mask flag registers (MK0L, MK0H, MK1L, MK1H, MK2L, MK2H)
- Priority specification flag registers (PR00L, PR00H, PR01L, PR01H, PR02L, PR02H, PR10L, PR10H, PR11L, PR11H, PR12L, PR12H)
- External interrupt rising edge enable registers (EGP0, EGP1)
- External interrupt falling edge enable registers (EGN0, EGN1)
- Program status word (PSW)

Tables 24 - 4 to 24 - 7 show a list of interrupt request flags, interrupt mask flags, and priority specification flags corresponding to interrupt request sources.

Table 24 - 4 Flags Corresponding to Interrupt Request Sources (1/4)

Interrupt Source	Interrupt Request Flag		Interrupt Mask Flag		Priority Specification Flag		64-pin	48-pin	36-pin	32-pin	24-pin
		Register		Register		Register					
INTWDTI	WDTIIF	IF0L	WDTIMK	MK0L	WDTIPR0, WDTIPR1	PR00L, PR10L	√	√	√	√	√
INTLVI	LVIIF		LVIMK		LVIPR0, LVIPR1		√	√	√	√	√
INTP0	PIF0		PMK0		PPR00, PPR10		√	√	√	√	√
INTP1	PIF1		PMK1		PPR01, PPR11		√	√	√	√	√
INTP2	PIF2		PMK2		PPR02, PPR12		√	√	√	√	√
INTP3	PIF3		PMK3		PPR03, PPR13		√	√	√	√	√
INTP4	PIF4		PMK4		PPR04, PPR14		√	√	√	√	√
INTP5	PIF5		PMK5		PPR05, PPR15		√	√	√	√	√

Table 24 - 5 Flags Corresponding to Interrupt Request Sources (2/4)

Interrupt Source	Interrupt Request Flag	Register	Interrupt Mask Flag	Register	Priority Specification Flag	Register	64-pin	48-pin	36-pin	32-pin	24-pin
INTST2 Note 1	STIF2 Note 1	IF0H	STMK2 Note 1	MK0H	STPR02, STPR12 Note 1	PR00H, PR10H	√	√	√	√	√
INTCSI20 Note 1	CSIIF20 Note 1		CSIMK20 Note 1		CSIPR020, CSIPR120 Note 1		√	√	√	√	√
INTIIC20 Note 1	IICIF20 Note 1		IICMK20 Note 1		IICPR020, IICPR120 Note 1		√	√	√	√	√
INTSR2 Note 2	SRIF2 Note 2		SRMK2 Note 2		SRPR02, SRPR12 Note 2		√	√	√	√	√
INTCSI21 Note 2	CSIIF21 Note 2		CSIMK21 Note 2		CSIPR021, CSIPR121 Note 2		√	√	—	—	—
INTIIC21 Note 2	IICIF21 Note 2		IICMK21 Note 2		IICPR021, IICPR121 Note 2		√	√	—	—	—
INTSRE2	SREIF2		SREMK2		SREPR02, SREPR12		√	√	√	√	√
INTST0 Note 3	STIF0 Note 3		STMK0 Note 3		STPR00, STPR10 Note 3		√	√	√	√	√
INTCSI00 Note 3	CSIIF00 Note 3		CSIMK00 Note 3		CSIPR000, CSIPR100 Note 3		√	√	√	√	√
INTIIC00 Note 3	IICIF00 Note 3		IICMK00 Note 3		IICPR000, IICPR100 Note 3		√	√	√	√	√
INTSR0 Note 4	SRIF0 Note 4		SRMK0 Note 4		SRPR00, SRPR10 Note 4		√	√	√	√	√
INTCSI01 Note 4	CSIIF01 Note 4		CSIMK01 Note 4		CSIPR001, CSIPR101 Note 4		√	√	—	—	—
INTIIC01 Note 4	IICIF01 Note 4		IICMK01 Note 4		IICPR001, IICPR101 Note 4		√	√	—	—	—
INTSRE0 Note 5	SREIF0 Note 5		SREMK0 Note 5		SREPR00, SREPR10 Note 5		√	√	√	√	√
INTTM01H Note 5	TMIF01H Note 5		TMMK01H Note 5		TMPR001H, TMPR101H Note 5		√	√	√	√	√

Note 1. If one of the interrupt sources INTST2, INTCSI20, and INTIIC20 is generated, bit 0 of the IF0H register is set to 1. Bit 0 of the MK0H, PR00H, and PR10H registers supports these three interrupt sources.

Note 2. If one of the interrupt sources INTSR2, INTCSI21, and INTIIC21 is generated, bit 1 of the IF0H register is set to 1. Bit 1 of the MK0H, PR00H, and PR10H registers supports these three interrupt sources.

Note 3. If one of the interrupt sources INTST0, INTCSI00, and INTIIC00 is generated, bit 5 of the IF0H register is set to 1. Bit 5 of the MK0H, PR00H, and PR10H registers supports these three interrupt sources.

Note 4. If one of the interrupt sources INTSR0, INTCSI01, and INTIIC01 is generated, bit 6 of the IF0H register is set to 1. Bit 6 of the MK0H, PR00H, and PR10H registers supports these three interrupt sources.

Note 5. Do not use a UART0 reception error interrupt and an interrupt of channel 1 of TAU0 (at higher 8-bit timer operation) at the same time because they share flags for the interrupt request sources. When the UART0 reception error interrupt is not used (EOC01 = 0), UART0 and channel 1 of TAU0 (at higher 8-bit timer operation) can be used at the same time. If either of the interrupt sources INTSRE0 or INTTM01H is generated, bit 7 of the IF0H register is set to 1. Bit 7 of the MK0H, PR00H, and PR10H registers support these two interrupt sources.

Table 24 - 6 Flags Corresponding to Interrupt Request Sources (3/4)

Interrupt Source	Interrupt Request Flag		Interrupt Mask Flag		Priority Specification Flag		64-pin	48-pin	36-pin	32-pin	24-pin
		Register		Register		Register					
INTST1 Note 1	STIF1 Note 1	IF1L	STMK1 Note 1	MK1L	STPR01, STPR11 Note 1	PR01L, PR11L	√	√	√	√	√
INTCSI10 Note 1	CSIIF10 Note 1		CSIMK10 Note 1		CSIPR010, CSIPR110 Note 1		√	—	—	—	—
INTIIC10 Note 1	IICIF10 Note 1		IICMK10 Note 1		IICPR010, IICPR110 Note 1		√	—	—	—	—
INTSR1 Note 2	SRIF1 Note 2		SRMK1 Note 2		SRPR01, SRPR11 Note 2		√	√	√	√	√
INTCSI11 Note 2	CSIIF11 Note 2		CSIMK11 Note 2		CSIPR011, CSIPR111 Note 2		√	√	√	√	√
INTIIC11 Note 2	IICIF11 Note 2		IICMK11 Note 2		IICPR011, IICPR111 Note 2		√	√	√	√	√
INTSRE1 Note 3	SREIF1 Note 3		SREMK1 Note 3		SREPR01, SREPR11 Note 3		√	√	√	√	√
INTTM03H Note 3	TMIF03H Note 3		TMMK03H Note 3		TMPR003H, TMPR103H Note 3		√	√	√	√	√
INTIICA0	IICAIF0		IICAMK0		IICAPR00, IICAPR10		√	√	√	√	√
INTTM00	TMIF00		TMMK00		TMPR000, TMPR100		√	√	√	√	√
INTTM01	TMIF01		TMMK01		TMPR001, TMPR101		√	√	√	√	√
INTTM02	TMIF02		TMMK02		TMPR002, TMPR102		√	√	√	√	√
INTTM03	TMIF03		TMMK03		TMPR003, TMPR103		√	√	√	√	√
INTAD	ADIF	IF1H	ADMK	MK1H	ADPR0, ADPR1	PR01H, PR11H	√	√	√	√	√
INTRTC	RTCIF		RTCMK		RTCPR0, RTCPR1		√	√	√	√	√
INTIT	ITIF		ITMK		ITPR0, ITPR1		√	√	√	√	√
INTKR	KRIF		KRMK		KRPR0, KRPR1		√	√	—	—	—
INTTRJ0	TRJIF0		TRJMK0		TRJPR00, TRJPR10		√	√	√	√	√

Note 1. If one of the interrupt sources INTST1, INTCSI10, and INTIIC10 is generated, bit 0 of the IF1L register is set to 1. Bit 0 of the MK1L, PR01L, and PR11L registers supports these three interrupt sources.

Note 2. If one of the interrupt sources INTSR1, INTCSI11, and INTIIC11 is generated, bit 1 of the IF1L register is set to 1. Bit 1 of the MK1L, PR01L, and PR11L registers supports these three interrupt sources.

Note 3. Do not use a UART1 reception error interrupt and an interrupt of channel 3 of TAU0 (at higher 8-bit timer operation) at the same time because they share flags for the interrupt request sources. When the UART1 reception error interrupt is not used (EOC03 = 0), UART1 and channel 3 of TAU0 (at higher 8-bit timer operation) can be used at the same time. If either of the interrupt sources INTSRE1 or INTTM03H is generated, bit 2 of the IF1H register is set to 1. Bit 2 of the MK1L, PR01L, and PR11L registers support these two interrupt sources.

Table 24 - 7 Flags Corresponding to Interrupt Request Sources (4/4)

Interrupt Source	Interrupt Request Flag		Interrupt Mask Flag		Priority Specification Flag		64-pin	48-pin	36-pin	32-pin	24-pin
		Register		Register		Register					
INTP6	PIF6	IF2L	PMK6	MK2L	PPR06, PPR16	PR02L, PR12L	√	√	√	√	—
INTP7	PIF7		PMK7		PPR07, PPR17		√	—	—	√	—
INTP8	PIF8		PMK8		PPR08, PPR18		√	√	√	√	√
INTP9	PIF9		PMK9		PPR09, PPR19		√	√	—	—	—
INTP10 Note 1	PIF10 Note 1		PMK10 Note 1		PPR010, PPR110 Note 1		√	√	√	√	√
INTCMP0 Note 1	CMPIF0 Note 1		CMPMK0 Note 1		CMPPR00, CMPPR10 Note 1		√	√	√	√	√
INTP11 Note 2	PIF11 Note 2	IF2H	PMK11 Note 2	MK2H	PPR011, PPR111 Note 2	PR02H, PR12H	√	√	√	√	√
INTCMP1 Note 2	CMPIF1 Note 2		CMPMK1 Note 2		CMPPR01, CMPPR11 Note 2		√	√	√	√	√
INTTRD0	TRDIF0		TRDMK0		TRDPR00, TRDPR10		√	√	√	√	√
INTTRD1	TRDIF1		TRDMK1		TRDPR01, TRDPR11		√	√	√	√	√
INTTRG	TRGIF		TRGMK		TRGPR0, TRGPR1		√	√	√	√	√
INTTRX	TRXIF		TRXMK		TRXPR0, TRXPR1		√	√	√	√	√
INTFL	FLIF		FLMK		FLPR0, FLPR1		√	√	√	√	√

Note 1. Do not use INTP10 and Comparator 0 at the same time because they share flags for the interrupt request sources. If one of the interrupt sources INTP10 and INTCMP0 is generated, bit 7 of the IF2L register is set to 1. Bit 7 of the MK2L, PR02L, and PR12L registers supports these two interrupt sources.

Note 2. Do not use INTP11 and Comparator 1 at the same time because they share flags for the interrupt request sources. If one of the interrupt sources INTP11 and INTCMP1 is generated, bit 0 of the IF2H register is set to 1. Bit 0 of the MK2H, PR02H, and PR12H registers supports these two interrupt sources.

24.3.1 Interrupt request flag registers (IF0L, IF0H, IF1L, IF1H, IF2L, IF2H)

The interrupt request flags are set to 1 when the corresponding interrupt request is generated or an instruction is executed. They are cleared to 0 when an instruction is executed upon acknowledgment of an interrupt request or upon reset signal generation.

When an interrupt is acknowledged, the interrupt request flag is automatically cleared and then the interrupt routine is entered.

The IF0L, IF0H, IF1L, IF1H, IF2L, and IF2H registers can be set by a 1-bit or 8-bit memory manipulation instruction. When the IF0L and IF0H registers, the IF1L and IF1H registers, and the IF2L and IF2H registers are combined to form 16-bit registers IF0, IF1, and IF2, they can be set by a 16-bit memory manipulation instruction.

Reset signal generation clears these registers to 00H.

Remark If an instruction that writes data to this register is executed, the number of instruction execution clocks increases by 2 clocks.

Figure 24 - 2 Format of Interrupt Request Flag Registers (IF0L, IF0H, IF1L, IF1H, IF2L, IF2H) (1/2)

Address: FFFE0H After reset: 00H R/W

Symbol	<7>	<6>	<5>	<4>	<3>	<2>	<1>	<0>
IF0L	PIF5	PIF4	PIF3	PIF2	PIF1	PIF0	LVIIF	WDTIIF

Address: FFFE1H After reset: 00H R/W

Symbol	<7>	<6>	<5>	4	3	<2>	<1>	<0>
IF0H	SREIF0 TMIF01H	SRIF0 CSIIF01 IICIF01	STIF0 CSIIF00 IICIF00	0	0	SREIF2	SRIF2 CSIIF21 IICIF21	STIF2 CSIIF20 IICIF20

Address: FFFE2H After reset: 00H R/W

Symbol	<7>	<6>	<5>	<4>	<3>	<2>	<1>	<0>
IF1L	TMIF03	TMIF02	TMIF01	TMIF00	IICAIF0	SREIF1 TMIF03H	SRIF1 CSIIF11 IICIF11	STIF1 CSIIF10 IICIF10

Address: FFFE3H After reset: 00H R/W

Symbol	7	<6>	5	4	<3>	<2>	<1>	<0>
IF1H	0	TRJIF0	0	0	KRIF	ITIF	RTCIF	ADIF

Address: FFFD0H After reset: 00H R/W

Symbol	<7>	<6>	<5>	<4>	<3>	2	1	0
IF2L	PIF10 CMPIF0	PIF9	PIF8	PIF7	PIF6	0	0	0

Figure 24 - 3 Format of Interrupt Request Flag Registers (IF0L, IF0H, IF1L, IF1H, IF2L, IF2H) (2/2)

Address: FFFD1H After reset: 00H R/W

Symbol	<7>	6	5	<4>	<3>	<2>	<1>	<0>
IF2H	FLIF	0	0	TRXIF	TRGIF	TRDIF1	TRDIF0	PIF11 CMPIF1

XXIFX	Interrupt request flag
0	No interrupt request signal is generated
1	Interrupt request is generated, interrupt request status

Caution 1. The available registers and bits differ depending on the product. For details about the registers and bits available for each product, see Tables 24 - 4 to 24 - 7. Be sure to set bits that are not available to the initial value.

Caution 2. When manipulating a flag of the interrupt request flag register, use a 1-bit memory manipulation instruction (CLR1). When describing in C language, use a bit manipulation instruction such as "IF0L.0 = 0;" or "_asm ("clr1 IF0L, 0");" because the compiled assembler must be a 1-bit memory manipulation instruction (CLR1).
If a program is described in C language using an 8-bit memory manipulation instruction such as "IF0L &= 0xfe;" and compiled, it becomes the assembler of three instructions.
mov a, IF0L
and a, #0FEH
mov IF0L, a

In this case, even if the request flag of the another bit of the same interrupt request flag register (IF0L) is set to 1 at the timing between "mov a, IF0L" and "mov IF0L, a", the flag is cleared to 0 at "mov IF0L, a". Therefore, care must be exercised when using an 8-bit memory manipulation instruction in C language.

24.3.2 Interrupt mask flag registers (MK0L, MK0H, MK1L, MK1H, MK2L, MK2H)

The interrupt mask flags are used to enable/disable the corresponding maskable interrupt.

The MK0L, MK0H, MK1L, MK1H, MK2L, and MK2H registers can be set by a 1-bit or 8-bit memory manipulation instruction. When the MK0L and MK0H registers, the MK1L and MK1H registers, and the MK2L and MK2H registers are combined to form 16-bit registers MK0, MK1, and MK2, they can be set by a 16-bit memory manipulation instruction.

Reset signal generation sets these registers to FFH.

Remark If an instruction that writes data to this register is executed, the number of instruction execution clocks increases by 2 clocks.

Figure 24 - 4 Format of Interrupt Mask Flag Registers (MK0L, MK0H, MK1L, MK1H, MK2L, MK2H) (1/2)

Address: FFFE4H After reset: FFH R/W

Symbol	<7>	<6>	<5>	<4>	<3>	<2>	<1>	<0>
MK0L	PMK5	PMK4	PMK3	PMK2	PMK1	PMK0	LVIMK	WDTIMK

Address: FFFE5H After reset: FFH R/W

Symbol	<7>	<6>	<5>	4	3	<2>	<1>	<0>
MK0H	SREMK0 TMMK01H	SRMK0 CSIMK01 IICMK01	STMK0 CSIMK00 IICMK00	1	1	SREMK2	SRMK2 CSIMK21 IICMK21	STMK2 CSIMK20 IICMK20

Address: FFFE6H After reset: FFH R/W

Symbol	<7>	<6>	<5>	<4>	<3>	<2>	<1>	<0>
MK1L	TMMK03	TMMK02	TMMK01	TMMK00	IICAMK0	SREMK1 TMMK03H	SRMK1 CSIMK11 IICMK11	STMK1 CSIMK10 IICMK10

Address: FFFE7H After reset: FFH R/W

Symbol	7	<6>	5	4	<3>	<2>	<1>	<0>
MK1H	1	TRJMK0	1	1	KRMK	ITMK	RTCMK	ADMK

Address: FFFD4H After reset: FFH R/W

Symbol	<7>	<6>	<5>	<4>	<3>	2	1	0
MK2L	PMK10 CMPMK0	PMK9	PMK8	PMK7	PMK6	1	1	1

Figure 24 - 5 Format of Interrupt Mask Flag Registers (MK0L, MK0H, MK1L, MK1H, MK2L, MK2H) (2/2)

Address: FFFD5H After reset: FFH R/W

Symbol	<7>	6	5	<4>	<3>	<2>	<1>	<0>
MK2H	FLMK	1	1	TRXMK	TRGMK	TRDMK1	TRDMK0	PMK11 CMPMK1

XXMKX	Interrupt servicing control
0	Interrupt servicing enabled
1	Interrupt servicing disabled

Caution The available registers and bits differ depending on the product. For details about the registers and bits available for each product, see Tables 24 - 4 to 24 - 7. Be sure to set bits that are not available to the initial value.

24.3.3 Priority specification flag registers (PR00L, PR00H, PR01L, PR01H, PR02L, PR02H, PR10L, PR10H, PR11L, PR11H, PR12L, PR12H)

The priority specification flag registers are used to set the corresponding maskable interrupt priority level.
A priority level is set by using the PR0xy and PR1xy registers in combination (xy = 0L, 0H, 1L, 1H, 2L, or 2H).
The PR00L, PR00H, PR01L, PR01H, PR02L, PR02H, PR10L, PR10H, PR11L, PR11H, PR12L, and the PR12H registers can be set by a 1-bit or 8-bit memory manipulation instruction. If the PR00L and PR00H registers, the PR01L and PR01H registers, the PR02L and PR02H registers, the PR10L and PR10H registers, the PR11L and PR11H registers, and the PR12L and PR12H registers are combined to form 16-bit registers PR00, PR01, PR02, PR10, PR11, and PR12, they can be set by a 16-bit memory manipulation instruction.
Reset signal generation sets these registers to FFH.

Remark If an instruction that writes data to this register is executed, the number of instruction execution clocks increases by 2 clocks.

Figure 24 - 6 Format of Priority Specification Flag Registers (PR00L, PR00H, PR01L, PR01H, PR02L, PR02H, PR10L, PR10H, PR11L, PR11H, PR12L, PR12H) (1/3)

Address: FFFE8H After reset: FFH R/W

Symbol	<7>	<6>	<5>	<4>	<3>	<2>	<1>	<0>
PR00L	PPR05	PPR04	PPR03	PPR02	PPR01	PPR00	LVIPR0	WDTIPR0

Address: FFFECH After reset: FFH R/W

Symbol	<7>	<6>	<5>	<4>	<3>	<2>	<1>	<0>
PR10L	PPR15	PPR14	PPR13	PPR12	PPR11	PPR10	LVIPR1	WDTIPR1

Address: FFFE9H After reset:FFH R/W

Symbol	<7>	<6>	<5>	4	3	<2>	<1>	<0>
PR00H	SREPR00 TMPR001H	SRPR00 CSIPR001 IICPR001	STPR00 CSIPR000 IICPR000	1	1	SREPR02	SRPR02 CSIPR021 IICPR021	STPR02 CSIPR020 IICPR020

Address: FFFEDH After reset: FFH R/W

Symbol	<7>	<6>	<5>	4	3	<2>	<1>	<0>
PR10H	SREPR10 TMPR101H	SRPR10 CSIPR101 IICPR101	STPR10 CSIPR100 IICPR100	1	1	SREPR12	SRPR12 CSIPR121 IICPR121	STPR12 CSIPR120 IICPR120

Address: FFFEAH After reset: FFH R/W

Symbol	<7>	<6>	<5>	<4>	<3>	<2>	<1>	<0>
PR01L	TMPR003	TMPR002	TMPR001	TMPR000	IICAPR00	SREPR01 TMPR003H	SRPR01 CSIPR011 IICPR011	STPR01 CSIPR010 IICPR010

Figure 24 - 7 Format of Priority Specification Flag Registers (PR00L, PR00H, PR01L, PR01H, PR02L, PR02H, PR10L, PR10H, PR11L, PR11H, PR12L, PR12H) (2/3)

Address: FFFEEH After reset: FFH R/W

Symbol	<7>	<6>	<5>	<4>	<3>	<2>	<1>	<0>
PR11L	TMPR103	TMPR102	TMPR101	TMPR100	IICAPR10	SREPR11 TMPR103H	SRPR11 CSIPR111 IICPR111	STPR11 CSIPR110 IICPR110

Address: FFFEBH After reset: FFH R/W

Symbol	7	<6>	5	4	<3>	<2>	<1>	<0>
PR01H	1	TRJPR00	1	1	KRPR0	ITPR0	RTCPR0	ADPR0

Address: FFFEFH After reset: FFH R/W

Symbol	7	<6>	5	4	<3>	<2>	<1>	<0>
PR11H	1	TRJPR10	1	1	KRPR1	ITPR1	RTCPR1	ADPR1

Address: FFFD8H After reset: FFH R/W

Symbol	<7>	<6>	<5>	<4>	<3>	2	1	0
PR02L	PPR010 CMPPR00	PPR09	PPR08	PPR07	PPR06	1	1	1

Address: FFFDCH After reset: FFH R/W

Symbol	<7>	<6>	<5>	<4>	<3>	2	1	0
PR12L	PPR110 CMPPR10	PPR19	PPR18	PPR17	PPR16	1	1	1

Address: FFFD9H After reset: FFH R/W

Symbol	<7>	6	5	<4>	<3>	<2>	<1>	<0>
PR02H	FLPR0	1	1	TRXPR0	TRGPR0	TRDPR01	TRDPR00	PPR011 CMPPR01

Address: FFFDDH After reset: FFH R/W

Symbol	<7>	6	5	<4>	<3>	<2>	<1>	<0>
PR12H	FLPR1	1	1	TRXPR1	TRGPR1	TRDPR11	TRDPR10	PPR111 CMPPR11

Figure 24 - 8 Format of Priority Specification Flag Registers (PR00L, PR00H, PR01L, PR01H, PR02L, PR02H, PR10L, PR10H, PR11L, PR11H, PR12L, PR12H) (3/3)

XXPR1X	XXPR0X	Priority level selection
0	0	Specify level 0 (high priority level)
0	1	Specify level 1
1	0	Specify level 2
1	1	Specify level 3 (low priority level)

Caution The available registers and bits differ depending on the product. For details about the registers and bits available for each product, see Tables 24 - 4 to 24 - 7. Be sure to set bits that are not available to the initial value.

24.3.4 External interrupt rising edge enable registers (EGP0, EGP1), external interrupt falling edge enable registers (EGN0, EGN1)

These registers specify the valid edge for INTP0 to INTP11.

The EGP0, EGP1, EGN0, and EGN1 registers can be set by a 1-bit or 8-bit memory manipulation instruction.

Reset signal generation clears these registers to 00H.

Figure 24 - 9 Format of External Interrupt Rising Edge Enable Registers (EGP0, EGP1) and External Interrupt Falling Edge Enable Registers (EGN0, EGN1)

Address: FFF38H After reset: 00H R/W

Symbol	7	6	5	4	3	2	1	0
EGP0	EGP7	EGP6	EGP5	EGP4	EGP3	EGP2	EGP1	EGP0

Address: FFF39H After reset: 00H R/W

Symbol	7	6	5	4	3	2	1	0
EGN0	EGN7	EGN6	EGN5	EGN4	EGN3	EGN2	EGN1	EGN0

Address: FFF3AH After reset:00H R/W

Symbol	7	6	5	4	3	2	1	0
EGP1	0	0	0	0	EGP11	EGP10	EGP9	EGP8

Address: FFF3BH After reset: 00H R/W

Symbol	7	6	5	4	3	2	1	0
EGN1	0	0	0	0	EGN11	EGN10	EGN9	EGN8

EGPn	EGNn	INTPn pin valid edge selection (n = 0 to 11)
0	0	Edge detection disabled
0	1	Falling edge
1	0	Rising edge
1	1	Both rising and falling edges

Table 24 - 8 shows the Ports Corresponding to EGPn and EGNn bits.

Table 24 - 8 Ports Corresponding to EGPn and EGNn bits

Detection Enable Bit		Interrupt Request Signal	64-pin	48-pin	36-pin	32-pin	24-pin
EGP0	EGN0	INTP0	√	√	√	√	√
EGP1	EGN1	INTP1	√	√	√	√	√
EGP2	EGN2	INTP2	√	√	√	√	√
EGP3	EGN3	INTP3	√	√	√	√	√
EGP4	EGN4	INTP4	√	√	√	√	√
EGP5	EGN5	INTP5	√	√	√	√	√
EGP6	EGN6	INTP6	√	√	√	√	—
EGP7	EGN7	INTP7	√	—	—	—	—
EGP8	EGN8	INTP8	√	√	√	√	√
EGP9	EGN9	INTP9	√	√	—	—	—
EGP10	EGN10	INTP10	√	√	√	√	√
EGP11	EGN11	INTP11	√	√	√	√	√

Caution **When the input port pins used for the external interrupt functions are switched to the output mode, the INTPn interrupt might be generated upon detection of a valid edge.**
When switching the input port pins to the output mode, set the port mode register (PMxx) to 0 after disabling the edge detection (by setting EGPn and EGNn to 0).

Remark 1. For edge detection port, see **2.1 Port Functions**.
Remark 2. n = 0 to 11

24.3.5 Program status word (PSW)

The program status word is a register used to hold the instruction execution result and the current status for an interrupt request. The IE flag that sets maskable interrupt enable/disable and the ISP0 and ISP1 flags that controls multiple interrupt servicing are mapped to the PSW.

Besides 8-bit read/write, this register can carry out operations using bit manipulation instructions and dedicated instructions (EI and DI). When a vectored interrupt request is acknowledged, if the BRK instruction is executed, the contents of the PSW are automatically saved into a stack and the IE flag is reset to 0. Upon acknowledgment of a maskable interrupt request, if the value of the priority specification flag register of the acknowledged interrupt is not 00, its value minus 1 is transferred to the ISP0 and ISP1 flags. The PSW contents are also saved into the stack with the PUSH PSW instruction. They are restored from the stack with the RETI, RETB, and POP PSW instructions.

Reset signal generation sets PSW to 06H.

Figure 24 - 10 Configuration of Program Status Word

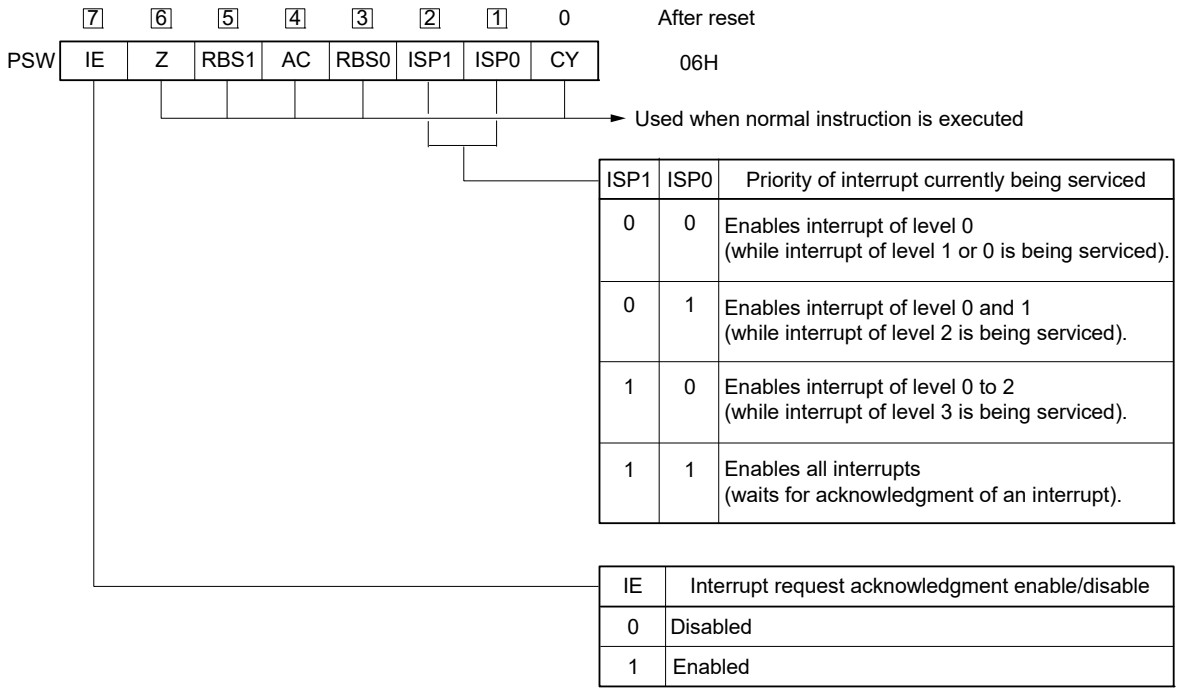

ISP1	ISP0	Priority of interrupt currently being serviced
0	0	Enables interrupt of level 0 (while interrupt of level 1 or 0 is being serviced).
0	1	Enables interrupt of level 0 and 1 (while interrupt of level 2 is being serviced).
1	0	Enables interrupt of level 0 to 2 (while interrupt of level 3 is being serviced).
1	1	Enables all interrupts (waits for acknowledgment of an interrupt).

IE	Interrupt request acknowledgment enable/disable
0	Disabled
1	Enabled

24.4 Interrupt Servicing Operations

24.4.1 Maskable interrupt request acknowledgment

A maskable interrupt request becomes acknowledgeable when the interrupt request flag is set to 1 and the mask (MK) flag corresponding to that interrupt request is cleared to 0. A vectored interrupt request is acknowledged if interrupts are in the interrupt enabled state (when the IE flag is set to 1). However, a low-priority interrupt request is not acknowledged during servicing of a higher priority interrupt request.

The times from generation of a maskable interrupt request until vectored interrupt servicing is performed are listed in Table 24 - 9 below.

For the interrupt request acknowledgment timing, see **Figures 24 - 12** and **24 - 13**.

Table 24 - 9 Time from Generation of Maskable Interrupt Until Servicing

	Minimum Time	Maximum Time Note
Servicing time	9 clocks	16 clocks

Note Maximum time does not apply when an instruction from the internal RAM area is executed.

Remark 1 clock: 1/f_{CLK} (f_{CLK}: CPU clock)

If two or more maskable interrupt requests are generated simultaneously, the request with a higher priority level specified in the priority specification flag is acknowledged first. If two or more interrupts requests have the same priority level, the request with the highest default priority is acknowledged first.

An interrupt request that is held pending is acknowledged when it becomes acknowledgeable.

Figure 24 - 11 shows the Interrupt Request Acknowledgment Processing Algorithm.

If a maskable interrupt request is acknowledged, the contents are saved into the stacks in the order of PSW, then PC, the IE flag is reset (0), and the contents of the priority specification flag corresponding to the acknowledged interrupt are transferred to the ISP1 and ISP0 flags. The vector table data determined for each interrupt request is the loaded into the PC and branched.

Restoring from an interrupt is possible by using the RETI instruction.

Figure 24 - 11 Interrupt Request Acknowledgment Processing Algorithm

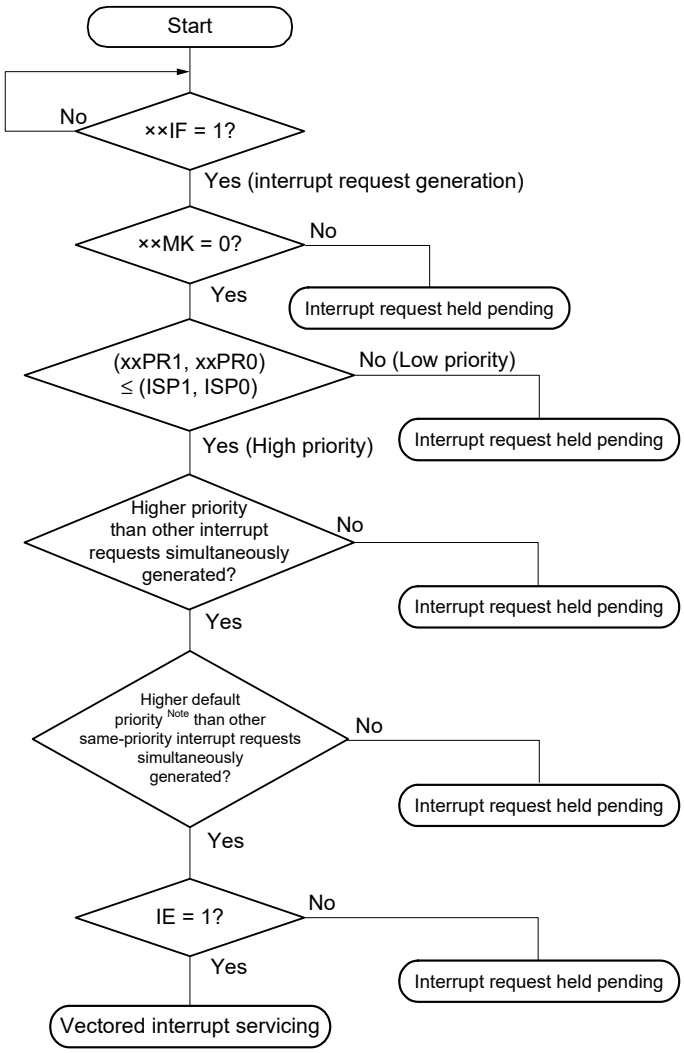

xxIF: Interrupt request flag
xxMK: Interrupt mask flag
xxPR0: Priority specification flag 0
xxPR1: Priority specification flag 1
IE: Flag that controls acknowledgment of maskable interrupt request (1 = Enable, 0 = Disable)
ISP0, ISP1: Flag that indicates the priority level of the interrupt currently being serviced (see **Figure 24 - 10**)

Note For the default priority, refer to **Tables 24 - 1** to **24 - 3 Interrupt Source List**.

Figure 24 - 12 Interrupt Request Acknowledgment Timing (Minimum Time)

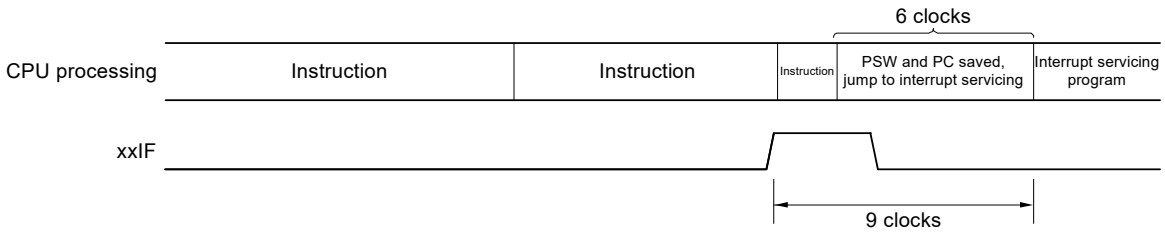

Remark 1 clock: 1/f_{CLK} (f_{CLK}: CPU clock)

Figure 24 - 13 Interrupt Request Acknowledgment Timing (Maximum Time)

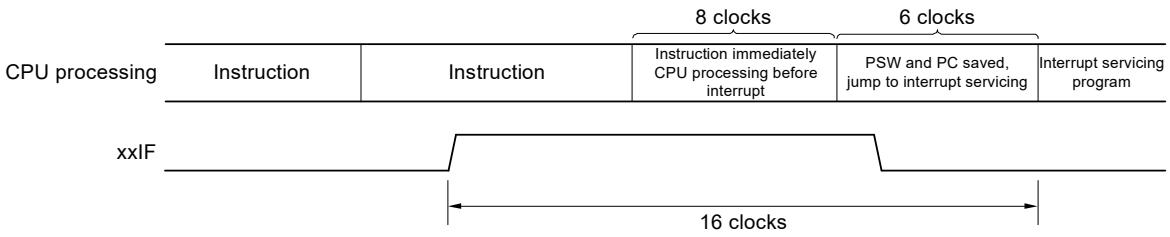

Remark 1 clock: 1/f_{CLK} (f_{CLK}: CPU clock)

24.4.2 Software interrupt request acknowledgment

A software interrupt request is acknowledged by BRK instruction execution. Software interrupts cannot be disabled.

If a software interrupt request is acknowledged, the contents are saved into the stacks in the order of the program status word (PSW), then program counter (PC), the IE flag is reset (0), and the contents of the vector table (0007EH, 0007FH) are loaded into the PC and branched.

Restoring from a software interrupt is possible by using the RETB instruction.

Caution Can not use the RETI instruction for restoring from the software interrupt.

24.4.3 Multiple interrupt servicing

Multiple interrupt servicing occurs when another interrupt request is acknowledged during execution of an interrupt.

Multiple interrupt servicing does not occur unless the interrupt request acknowledgment enabled state is selected (IE = 1). When an interrupt request is acknowledged, interrupt request acknowledgment becomes disabled (IE = 0). Therefore, to enable multiple interrupt servicing, it is necessary to set (1) the IE flag with the EI instruction during interrupt servicing to enable interrupt acknowledgment.

Moreover, even if interrupts are enabled, multiple interrupt servicing may not be enabled, this being subject to interrupt priority control. Two types of priority control are available: default priority control and programmable priority control. Programmable priority control is used for multiple interrupt servicing.

In the interrupt enabled state, if an interrupt request with a priority equal to or higher than that of the interrupt currently being serviced is generated, it is acknowledged for multiple interrupt servicing. If an interrupt with a priority equal to or lower than that of the interrupt currently being serviced is generated during interrupt servicing, it is not acknowledged for multiple interrupt servicing. However, when setting the IE flag to 1 during the interruption at level 0, other level 0 interruptions can be allowed.

Interrupt requests that are not enabled because interrupts are in the interrupt disabled state or because they have a lower priority are held pending. When servicing of the current interrupt ends, the pending interrupt request is acknowledged following execution of at least one main processing instruction execution.

Table 24 - 10 shows Relationship Between Interrupt Requests Enabled for Multiple Interrupt Servicing During Interrupt Servicing and Figures 24 - 14 and 24 - 15 show multiple interrupt servicing examples.

Table 24 - 10 Relationship Between Interrupt Requests Enabled for Multiple Interrupt Servicing During Interrupt Servicing

Multiple Interrupt Request / Interrupt Being Serviced		Maskable Interrupt Request								Software Interrupt Request
		Priority Level 0 (PR = 00)		Priority Level 1 (PR = 01)		Priority Level 2 (PR = 10)		Priority Level 3 (PR = 11)		
		IE = 1	IE = 0	IE = 1	IE = 0	IE = 1	IE = 0	IE = 1	IE = 0	
Maskable interrupt	ISP1 = 0 ISP0 = 0	√	×	×	×	×	×	×	×	√
	ISP1 = 0 ISP0 = 1	√	×	√	×	×	×	×	×	√
	ISP1 = 1 ISP0 = 0	√	×	√	×	√	×	×	×	√
	ISP1 = 1 ISP0 = 1	√	×	√	×	√	×	√	×	√
Software interrupt		√	×	√	×	√	×	√	×	√

Remark 1. √: Multiple interrupt servicing enabled

Remark 2. ×: Multiple interrupt servicing disabled

Remark 3. ISP0, ISP1, and IE are flags contained in the PSW.
ISP1 = 0, ISP0 = 0: An interrupt of level 1 or level 0 is being serviced.
ISP1 = 0, ISP0 = 1: An interrupt of level 2 is being serviced.
ISP1 = 1, ISP0 = 0: An interrupt of level 3 is being serviced.
ISP1 = 1, ISP0 = 1: Wait for An interrupt acknowledgment (all interrupts enabled).
IE = 0: Interrupt request acknowledgment is disabled.
IE = 1: Interrupt request acknowledgment is enabled.

Remark 4. PR is a flag contained in the PR00L, PR00H, PR01L, PR01H, PR02L, PR02H, PR10L, PR10H, PR11L, PR11H, PR12L, and PR12H registers.
PR = 00: Specify level 0 with ××PR1× = 0, ××PR0× = 0 (higher priority level)
PR = 01: Specify level 1 with ××PR1× = 0, ××PR0× = 1
PR = 10: Specify level 2 with ××PR1× = 1, ××PR0× = 0
PR = 11: Specify level 3 with ××PR1× = 1, ××PR0× = 1 (lower priority level)

Figure 24 - 14 Examples of Multiple Interrupt Servicing (1/2)

Example 1. Multiple interrupt servicing occurs twice

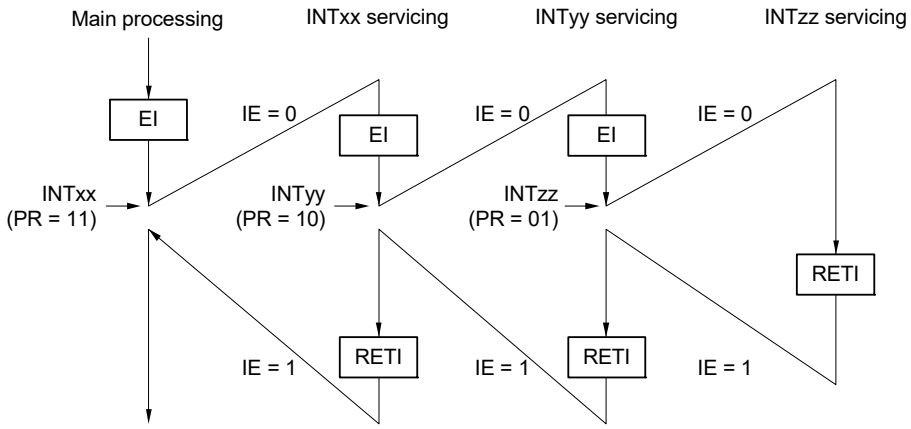

During servicing of interrupt INTxx, two interrupt requests, INTyy and INTzz, are acknowledged, and multiple interrupt servicing takes place. Before each interrupt request is acknowledged, the EI instruction must always be issued to enable interrupt request acknowledgment.

Example 2. Multiple interrupt servicing does not occur due to priority control

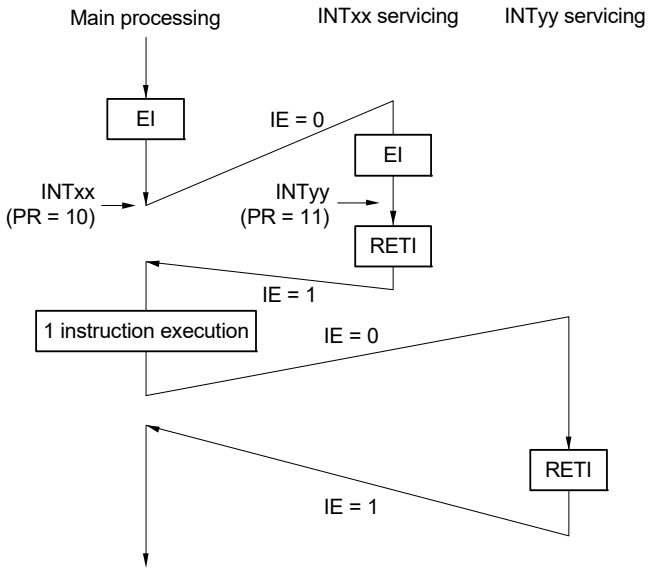

Interrupt request INTyy issued during servicing of interrupt INTxx is not acknowledged because its priority is lower than that of INTxx, and multiple interrupt servicing does not take place. The INTyy interrupt request is held pending, and is acknowledged following execution of one main processing instruction.

PR = 00: Specify level 0 with xxPR1x = 0, xxPR0x = 0 (higher priority level)
PR = 01: Specify level 1 with xxPR1x = 0, xxPR0x = 1
PR = 10: Specify level 2 with xxPR1x = 1, xxPR0x = 0
PR = 11: Specify level 3 with xxPR1x = 1, xxPR0x = 1 (lower priority level)
IE = 0: Interrupt request acknowledgment is disabled
IE = 1: Interrupt request acknowledgment is enabled.

Figure 24 - 15 Examples of Multiple Interrupt Servicing (2/2)

Example 3. Multiple interrupt servicing does not occur because interrupts are not enabled

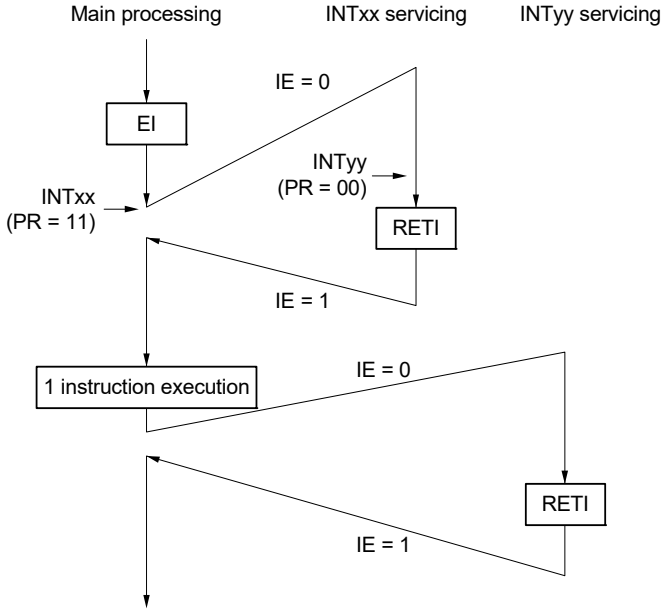

Interrupts are not enabled during servicing of interrupt INTxx (EI instruction is not issued), therefore, interrupt request INTyy is not acknowledged and multiple interrupt servicing does not take place. The INTyy interrupt request is held pending, and is acknowledged following execution of one main processing instruction.

PR = 00: Specify level 0 with xxPR1x = 0, xxPR0x = 0 (higher priority level)
PR = 01: Specify level 1 with xxPR1x = 0, xxPR0x = 1
PR = 10: Specify level 2 with xxPR1x = 1, xxPR0x = 0
PR = 11: Specify level 3 with xxPR1x = 1, xxPR0x = 1 (lower priority level)
IE = 0: Interrupt request acknowledgment is disabled
IE = 1: Interrupt request acknowledgment is enabled.

24.4.4 Interrupt servicing during division instruction

The RL78/G1F handles interrupts during the DIVHU/DIVWU instruction in order to enhance the interrupt response when a division instruction is executed.

- When an interrupt is generated while the DIVHU/DIVWU instruction is executed, the instruction is suspended
- After the instruction is suspended, the PC indicates the next instruction after DIVHU/DIVWU
- An interrupt is generated by the next instruction
- PC-3 is stacked to execute the DIVHU/DIVWU instruction again

Normal interrupt	Interrupts while Executing DIVHU/DIVWU Instruction
(SP-1) ← PSW	(SP-1) ← PSW
(SP-2) ← $(PC)_S$	(SP-2) ← $(PC-3)_S$
(SP-3) ← $(PC)_H$	(SP-3) ← $(PC-3)_H$
(SP-4) ← $(PC)_L$	(SP-4) ← $(PC-3)_L$
PC_S ← 0000	PC_S ← 0000
PC_H ← (Vector)	PC_H ← (Vector)
PC_L ← (Vector)	PC_L ← (Vector)
SP ← SP-4	SP ← SP-4
IE ← 0	IE ← 0

The AX, BC, DE, and HL registers are used for DIVHU/DIVWU. Use these registers by stacking them for interrupt servicing.

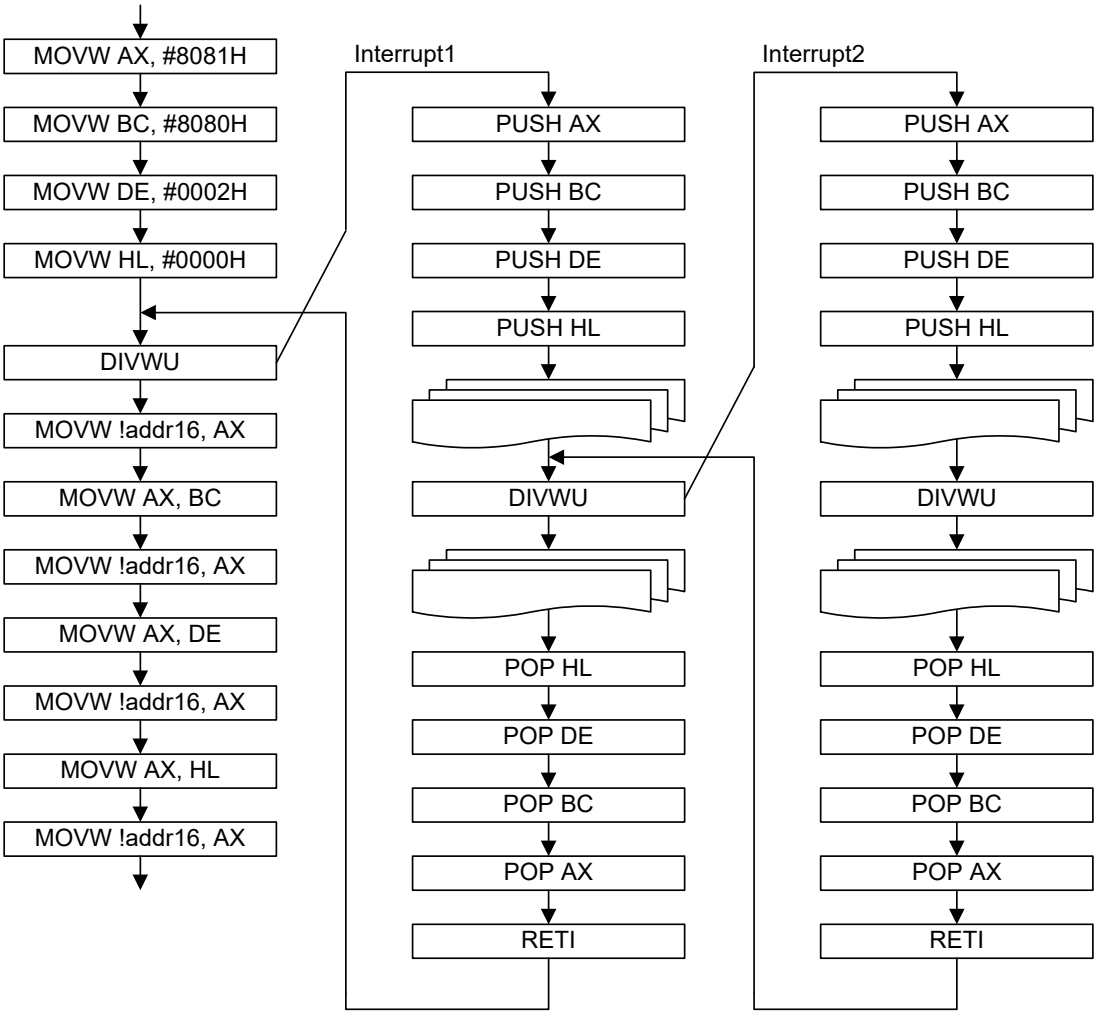

Caution **Disable interrupts when executing the DIVHU or DIVWU instruction in an interrupt servicing routine.**

Alternatively, unless they are executed in the RAM area, note that execution of a DIVHU or DIVWU instruction is possible even with interrupts enabled as long as a NOP instruction is added immediately after the DIVHU or DIVWU instruction in the assembly language source code. The following compilers automatically add a NOP instruction immediately after any DIVHU or DIVWU instruction output during the build process.

- **V. 1.71 and later versions of the CA78K0R (Renesas Electronics compiler), for both C and assembly language source code**
- **Service pack 1.40.6 and later versions of the EWRL78 (IAR compiler), for C language source code**
- **GNURL78 (KPIT compiler), for C language source code**

24.4.5 Interrupt request hold

There are instructions where, even if an interrupt request is issued while the instructions are being executed, interrupt request acknowledgment is held pending until the end of execution of the next instruction. These instructions (interrupt request hold instructions) are listed below.

- MOV PSW, #byte
- MOV PSW, A
- MOV1 PSW. bit, CY
- SET1 PSW. bit
- CLR1 PSW. bit
- RETB
- RETI
- POP PSW
- BTCLR PSW. bit, $addr20
- EI
- DI
- SKC
- SKNC
- SKZ
- SKNZ
- SKH
- SKNH
- MULHU
- MULH
- MACHU
- MACH
- Write instructions for the IF0L, IF0H, IF1L, IF1H, IF2L, IF2H, MK0L, MK0H, MK1L, MK1H, MK2L, MK2H, PR00L, PR00H, PR01L, PR01H, PR02L, PR02H, PR10L, PR10H, PR11L, PR11H, PR12L, and PR12H registers

Figure 24 - 16 shows the timing at which interrupt requests are held pending.

Figure 24 - 16 Interrupt Request Hold

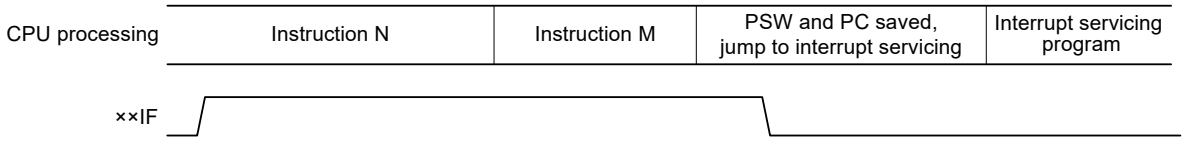

Remark 1. Instruction N: Interrupt request hold instruction
Remark 2. Instruction M: Instruction other than interrupt request hold instruction

CHAPTER 25 KEY INTERRUPT FUNCTION

The number of key interrupt input channels differs, depending on the product.

	30, 32, 36-pin	40, 44-pin	48-pin	52, 64, 80, 100-pin
Key interrupt input channels	—	4 ch	6 ch	8 ch

25.1 Functions of Key Interrupt

A key interrupt (INTKR) can be generated by inputting a falling edge to the key interrupt input pins (KR0 to KR7).

Table 25 - 1 Assignment of Key Interrupt Detection Pins

Key interrupt pins	Key return mode register (KRM)
KR0	KRM0
KR1	KRM1
KR2	KRM2
KR3	KRM3
KR4	KRM4
KR5	KRM5
KR6	KRM6
KR7	KRM7

Remark KR0 to KR3: 40-pin, 44-pin
KR0 to KR5: 48-pin
KR0 to KR7: 52-pin, 64-pin, 80-pin, 100-pin

25.2 Configuration of Key Interrupt

The key interrupt includes the following hardware.

Table 25 - 2 Configuration of Key Interrupt

Item	Configuration
Control register	Key return mode register (KRM) Port mode register 7 (PM7)

Figure 25 - 1 Block Diagram of Key Interrupt

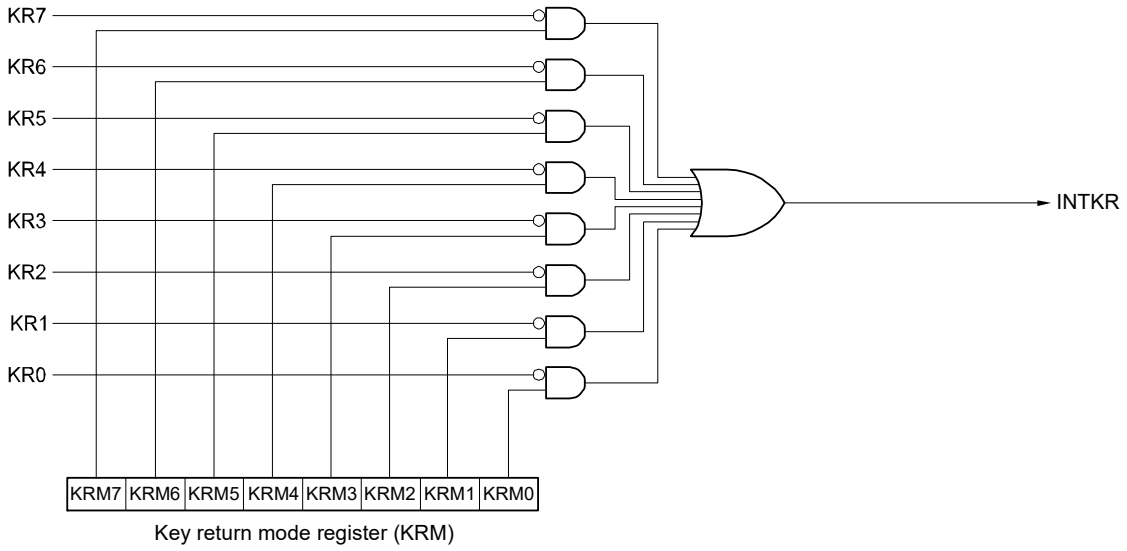

Remark KR0 to KR3: 40-pin, 44-pin

KR0 to KR5: 48-pin

KR0 to KR7: 52-pin, 64-pin, 80-pin, 100-pin

25.3 Register Controlling Key Interrupt

The key interrupt function is controlled by the following registers.

- Key return mode register (KRM)
- Port mode register 7 (PM7)

25.3.1 Key return mode register (KRM)

The KRM0 to KRM7 bits are registers for controlling signals KR0 to KR7.

The KRM register can be set by a 1-bit or 8-bit memory manipulation instruction.

Reset signal generation clears this register to 00H.

Figure 25 - 2 Format of Key return mode register (KRM)

Address: FFF37H After reset: 00H R/W

Symbol	7	6	5	4	3	2	1	0
KRM	KRM7	KRM6	KRM5	KRM4	KRM3	KRM2	KRM1	KRM0

KRMn	Key interrupt mode control
0	Does not detect key interrupt signal
1	Detects key interrupt signal

Caution 1. The on-chip pull-up resistors can be applied by setting the corresponding key interrupt input pins (bits) in pull-up resistor register 7 (PU7) to 1.

Caution 2. An interrupt will be generated if the target bit of the KRM register is set while a low level is being input to the key interrupt input pin. To ignore this interrupt, set the KRM register after disabling interrupt servicing by using the interrupt mask flag. Afterward, clear the interrupt request flag and enable interrupt servicing after waiting for the key interrupt input low-level width (t_{KR}) (see 37.4 or 38.4 AC characteristics).

Caution 3. The pins not used in the key interrupt mode can be used as normal ports.

Remark 1. n = 0 to 7

Remark 2. KR0 to KR3: 40-pin, 44-pin
KR0 to KR5: 48-pin
KR0 to KR7: 52-pin, 64-pin, 80-pin, 100-pin

25.3.2 Port mode register 7 (PM7)

When port 7 is used as the key interrupt input pins (KR0 to KR7), set the PM7n bit to 1. The output latches of P7n at this time may be 0 or 1. The PM7 register can be set by a 1-bit or 8-bit memory manipulation instruction. Reset signal generation sets this register to FFH.

Use of an on-chip pull-up resistor can be specified in 1-bit units by the pull-up resistor option register 7 (PU7).

Figure 25 - 3 Format of Port mode register 7 (PM7)

Address: FFF27H After reset: FFH R/W

Symbol	7	6	5	4	3	2	1	0
PM7	PM77	PM76	PM75	PM74	PM73	PM72	PM71	PM70

PM7n	P7n pin I/O mode selection (n = 0 to 7)
0	Output mode (output buffer on)
1	Input mode (output buffer off)

CHAPTER 26 STANDBY FUNCTION

26.1 Standby Function

The standby function reduces the operating current of the system, and the following three modes are available.

(1) HALT mode

HALT instruction execution sets the HALT mode. In the HALT mode, the CPU operation clock is stopped. If the high-speed system clock oscillator, high-speed on-chip oscillator, or subsystem clock oscillator is operating before the HALT mode is set, oscillation of each clock continues. In this mode, the operating current is not decreased as much as in the STOP mode, but the HALT mode is effective for restarting operation immediately upon interrupt request generation and carrying out intermittent operations frequently.

(2) STOP mode

STOP instruction execution sets the STOP mode. In the STOP mode, the high-speed system clock oscillator and high-speed on-chip oscillator stop, stopping the whole system, thereby considerably reducing the CPU operating current.

Because this mode can be cleared by an interrupt request, it enables intermittent operations to be carried out. However, because a wait time is required to secure the oscillation stabilization time after the STOP mode is released when the X1 clock is selected, select the HALT mode if it is necessary to start processing immediately upon interrupt request generation.

(3) SNOOZE mode

In the SNOOZE mode, the STOP mode is released by the CSI00 or UART0 data reception, an A/D conversion request by the timer trigger signal (the interrupt request signal (INTRTC/INTIT) or ELC event input), or DTC start source, and the CSI00 or UART0 data reception, A/D conversion, and DTC operation is performed without operating the CPU. This can only be specified when the high-speed on-chip oscillator is selected for the CPU/peripheral hardware clock (f_{CLK}).

In either of these two modes, all the contents of registers, flags and data memory just before the standby mode is set are held. The I/O port output latches and output buffer statuses are also held.

Caution 1. The STOP mode can be used only when the CPU is operating on the main system clock. Do not set to the STOP mode while the CPU operates with the subsystem clock. The HALT mode can be used when the CPU is operating on either the main system clock or the subsystem clock.

Caution 2. When shifting to the STOP mode, be sure to stop the peripheral hardware operation operating with main system clock before executing STOP instruction (except SNOOZE mode setting unit).

Caution 3. When using CSI00, UART0, or the A/D converter in the SNOOZE mode, set up serial standby control register 0 (SSC0) and A/D converter mode register 2 (ADM2) before switching to the STOP mode. For details, see 19.3 Registers Controlling Serial Array Unit and 15.3 Registers Controlling A/D Converter.

Caution 4. The following sequence is recommended for operating current reduction of the A/D converter when the standby function is used: First clear bit 7 (ADCS) and bit 0 (ADCE) of A/D converter mode register 0 (ADM0) to 0 to stop the A/D conversion operation, and then execute the STOP instruction.

Caution 5. It can be selected by the option byte whether the low-speed on-chip oscillator continues oscillating or stops in the HALT or STOP mode. For details, see CHAPTER 32 OPTION BYTE.

26.2 Registers controlling standby function

The registers which control the standby function are described below.

- Subsystem clock supply mode control register (OSMC)
- Oscillation stabilization time counter status register (OSTC)
- Oscillation stabilization time select register (OSTS)

Remark For details of registers described above, see **CHAPTER 5 CLOCK GENERATOR**. For registers which control the SNOOZE mode, **CHAPTER 15 A/D CONVERTER** and **CHAPTER 19 SERIAL ARRAY UNIT**.

26.3 Standby Function Operation

26.3.1 HALT mode

(1) HALT mode

The HALT mode is set by executing the HALT instruction. HALT mode can be set regardless of whether the CPU clock before the setting was the high-speed system clock, high-speed on-chip oscillator clock, or subsystem clock.

The operating statuses in the HALT mode are shown below.

Caution Because the interrupt request signal is used to clear the HALT mode, if the interrupt mask flag is 0 (the interrupt processing is enabled) and the interrupt request flag is 1 (the interrupt request signal is generated), the HALT mode is not entered even if the HALT instruction is executed in such a situation.

Table 26 - 1 Operating Statuses in HALT Mode (1/2)

Item \ HALT Mode Setting		When HALT Instruction is Executed While CPU is Operating on Main System Clock		
		When CPU is Operating on High-speed On-chip Oscillator Clock (f_{IH})	When CPU is Operating on X1 Clock (f_X)	When CPU is Operating on External Main System Clock (f_{EX})
System clock		Clock supply to the CPU is stopped		
Main system clock	f_{IH}	Operation continues (cannot be stopped)	Operation disabled	
	f_X	Operation disabled	Operation continues (cannot be stopped)	Cannot operate
	f_{EX}		Cannot operate	Operation continues (cannot be stopped)
Subsystem clock	f_{XT}	Status before HALT mode was set is retained		
	f_{EXS}			
Low-speed on-chip oscillator clock	f_{IL}	Set by bits 0 (WDSTBYON) and 4 (WDTON) of option byte (000C0H), and WUTMMCK0 bit of subsystem clock supply mode control register (OSMC) • WUTMMCK0 = 1: Oscillates • WUTMMCK0 = 0 and WDTON = 0: Stops • WUTMMCK0 = 0, WDTON = 1, and WDSTBYON = 1: Oscillates • WUTMMCK0 = 0, WDTON = 1, and WDSTBYON = 0: Stops		
CPU		Operation stopped		
Code flash memory				
Data flash memory				
RAM		Operation stopped (Operable while in the DTC is executed)		
Port (latch)		Status before HALT mode was set is retained		
Timer array unit		Operable		
Real-time clock (RTC)				
12-bit Interval timer				
Watchdog timer		See **CHAPTER 14 WATCHDOG TIMER**.		
Timer RJ		Operable		
Timer RD, PWMOPA				
Timer RG				
Timer RX				
Clock output/buzzer output				
A/D converter				
D/A converter				
PGA, Comparator				
Serial array unit (SAU)				
IrDA				
Serial interface (IICA)				
Data transfer controller (DTC)				
Event link controller (ELC)		Operable function blocks can be linked		
Power-on-reset function		Operable		
Voltage detection function				
External interrupt				
Key interrupt function				
CRC operation function	High-speed CRC			
	General-purpose CRC	In the calculation of the RAM area, operable when DTC is executed only		
Illegal-memory access detection function		Operable when DTC is executed only		
RAM parity error detection function				
RAM guard function				
SFR guard function				

Remark Operation stopped: Operation is automatically stopped before switching to the HALT mode.
Operation disabled: Operation is stopped before switching to the HALT mode.
f_{IH}: High-speed on-chip oscillator clock f_{IL}: Low-speed on-chip oscillator clock
f_X: X1 clock f_{EX}: External main system clock
f_{XT}: XT1 clock f_{EXS}: External subsystem clock

Table 26 - 2 Operating Statuses in HALT Mode (2/2)

Item \ HALT Mode Setting			When HALT Instruction is Executed While CPU is Operating on Subsystem Clock	
			When CPU is Operating on XT1 Clock (f_{XT})	When CPU is Operating on External Subsystem Clock (f_{EXS})
System clock			Clock supply to the CPU is stopped	
	Main system clock	f_{IH}	Operation disabled	
		f_X		
		f_{EX}		
	Subsystem clock	f_{XT}	Operation continues (cannot be stopped)	Cannot operate
		f_{EXS}	Cannot operate	Operation continues (cannot be stopped)
	Low-speed on-chip oscillator clock	f_{IL}	Set by bits 0 (WDSTBYON) and 4 (WDTON) of option byte (000C0H), and WUTMMCK0 bit of subsystem clock supply mode control register (OSMC) • WUTMMCK0 = 1: Oscillates • WUTMMCK0 = 0 and WDTON = 0: Stops • WUTMMCK0 = 0, WDTON = 1, and WDSTBYON = 1: Oscillates • WUTMMCK0 = 0, WDTON = 1, and WDSTBYON = 0: Stops	
CPU			Operation stopped	
Code flash memory				
Data flash memory				
RAM			Operation stopped (Operable while in the DTC is executed)	
Port (latch)			Status before HALT mode was set is retained	
Timer array unit			Operates when the RTCLPC bit is 0 (operation is disabled when the RTCLPC bit is not 0).	
Real-time clock (RTC)			Operable	
12-bit Interval timer				
Watchdog timer			See **CHAPTER 14 WATCHDOG TIMER**.	
Timer RJ			Operates when the RTCLPC bit is 0 (operation is disabled when the RTCLPC bit is not 0).	
Timer RD, PWMOPA				
Timer RG				
Timer RX				
Clock output/buzzer output				
A/D converter			Operation disabled	
D/A converter			Operates when the RTCLPC bit is 0 (operation is disabled when the RTCLPC bit is not 0).	
PGA, Comparator			Operates when the RTCLPC bit is 0 (operation is disabled when the RTCLPC bit is not 0).	
Serial array unit (SAU)			Operates when the RTCLPC bit is 0 (operation is disabled when the RTCLPC bit is not 0).	
IrDA				
Serial interface (IICA)			Operation disabled	
Data transfer controller (DTC)			Operates when the RTCLPC bit is 0 (operation is disabled when the RTCLPC bit is not 0).	
Event link controller (ELC)			Operable function blocks can be linked	
Power-on-reset function			Operable	
Voltage detection function				
External interrupt				
Key interrupt function				
CRC operation function	High-speed CRC		Operation disabled	
	General-purpose CRC		In the calculation of the RAM area, operable when DTC is executed only	
Illegal-memory access detection function			Operable when DTC is executed only	
RAM parity error detection function				
RAM guard function				
SFR guard function				

Remark Operation stopped: Operation is automatically stopped before switching to the HALT mode.
Operation disabled: Operation is stopped before switching to the HALT mode.
f_{IH}: High-speed on-chip oscillator clock
f_{IL}: Low-speed on-chip oscillator clock
f_X: X1 clock
f_{EX}: External main system clock
f_{XT}: XT1 clock
f_{EXS}: External subsystem clock

(2) HALT mode release

The HALT mode can be released by the following two sources.

(a) Release by unmasked interrupt request

When an unmasked interrupt request is generated, the HALT mode is released. If interrupt acknowledgment is enabled, vectored interrupt servicing is carried out. If interrupt acknowledgment is disabled, the next address instruction is executed.

Figure 26 - 1 HALT Mode Release by Interrupt Request Generation

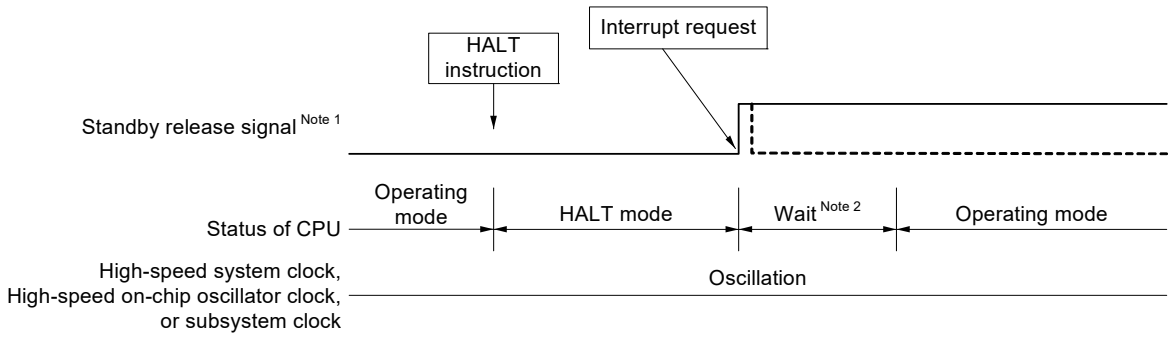

Note 1. For details of the standby release signal, see **Figure 24 - 1 Basic Configuration of Interrupt Function**.

Note 2. Wait time for HALT mode release

- When vectored interrupt servicing is carried out

Main system clock:	15 to 16 clocks
Subsystem clock (RTCLPC = 0):	10 to 11 clocks
Subsystem clock (RTCLPC = 1):	11 to 12 clocks

- When vectored interrupt servicing is not carried out

Main system clock:	9 to 10 clocks
Subsystem clock (RTCLPC = 0):	4 to 5 clocks
Subsystem clock (RTCLPC = 1):	5 to 6 clocks

Remark The broken lines indicate the case when the interrupt request which has released the standby mode is acknowledged.

(b) Release by reset signal generation

When the reset signal is generated, HALT mode is released, and then, as in the case with a normal reset operation, the program is executed after branching to the reset vector address.

Figure 26 - 2 HALT Mode Release by Reset (1/2)

(1) When high-speed on-chip oscillator clock is used as CPU clock

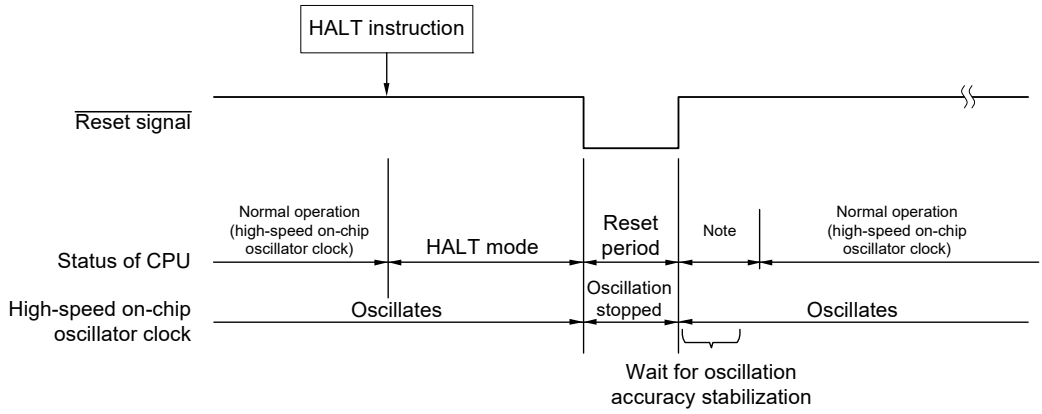

(2) When high-speed system clock is used as CPU clock

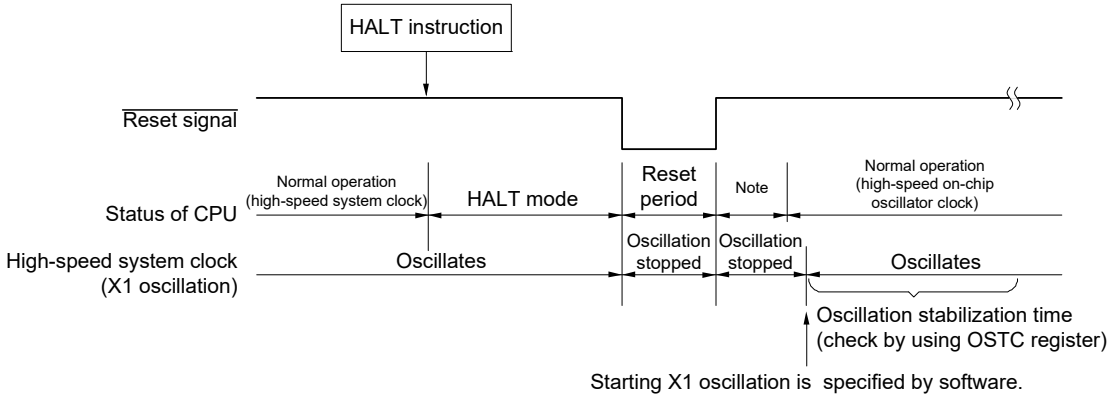

Note For the reset processing time, see **CHAPTER 27 RESET FUNCTION**.
For the reset processing time of the power-on-reset circuit (POR) and voltage detector (LVD), see **CHAPTER 28 POWER-ON-RESET CIRCUIT**.

Figure 26 - 3 HALT Mode Release by Reset (2/2)

(3) When subsystem clock is used as CPU clock

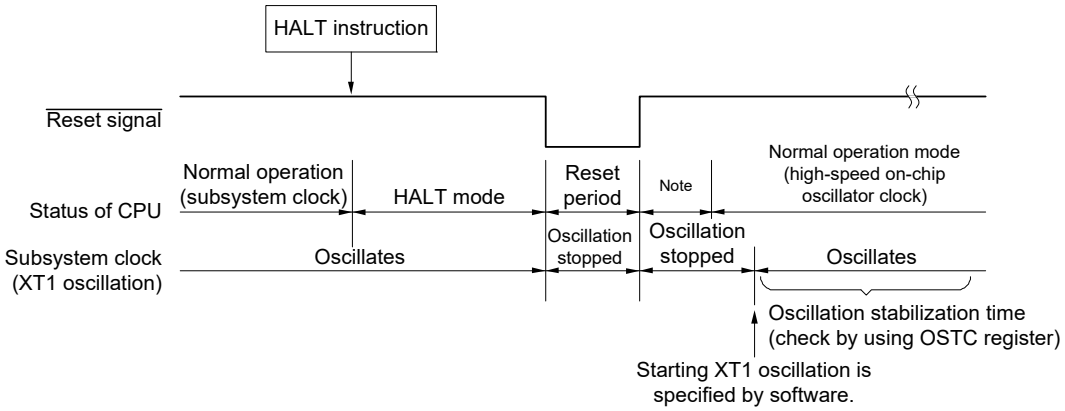

Note For the reset processing time, see **CHAPTER 27 RESET FUNCTION**.
For the reset processing time of the power-on-reset circuit (POR) and voltage detector (LVD), see **CHAPTER 28 POWER-ON-RESET CIRCUIT**.

26.3.2 STOP mode

(1) STOP mode setting and operating statuses

The STOP mode is set by executing the STOP instruction, and it can be set only when the CPU clock before the setting was the high-speed on-chip oscillator clock, X1 clock, or external main system clock.

Caution Because the interrupt request signal is used to clear the STOP mode, if the interrupt mask flag is 0 (the interrupt processing is enabled) and the interrupt request flag is 1 (the interrupt request signal is generated), the STOP mode is immediately cleared if set when the STOP instruction is executed in such a situation.
Accordingly, once the STOP instruction is executed, the system returns to its normal operating mode after the elapse of release time from the STOP mode.

The operating statuses in the STOP mode are shown below.

Table 26 - 3 Operating Statuses in STOP Mode

Item \ STOP Mode Setting	When STOP Instruction is Executed While CPU is Operating on Main System Clock		
	When CPU is Operating on High-speed On-chip Oscillator Clock (f_{IH})	When CPU is Operating on X1 Clock (f_X)	When CPU is Operating on External Main System Clock (f_{EX})
System clock	Clock supply to the CPU is stopped		
Main system clock: f_{IH}	Stopped		
Main system clock: f_X			
Main system clock: f_{EX}			
Subsystem clock: f_{XT}	Status before STOP mode was set is retained		
Subsystem clock: f_{EXS}			
f_{IL}	Set by bits 0 (WDSTBYON) and 4 (WDTON) of option byte (000C0H), and WUTMMCK0 bit of subsystem clock supply mode control register (OSMC) • WUTMMCK0 = 1: Oscillates • WUTMMCK0 = 0 and WDTON = 0: Stops • WUTMMCK0 = 0, WDTON = 1, and WDSTBYON = 1: Oscillates • WUTMMCK0 = 0, WDTON = 1, and WDSTBYON = 0: Stops		
CPU	Operation stopped		
Code flash memory			
Data flash memory			
RAM			
Port (latch)	Status before STOP mode was set is retained		
Timer array unit	Operation disabled		
Real-time clock (RTC)	Operable		
12-bit Interval timer			
Watchdog timer	See **CHAPTER 14 WATCHDOG TIMER**.		
Timer RJ	• Operable in event count mode when TRJIO input with no filer is selected • Operable when the subsystem clock is selected as the count source and RTCLPC in the OSMC register = 0 • Operable when the low-speed on-chip oscillator is selected as the count source • Operation is disabled under any conditions other than the above		
Timer RD, PWMOPA	Operation disabled		
Timer RG			
Timer RX			
Clock output/buzzer output	Operates when the subsystem clock is selected as the clock source for counting and the RTCLPC bit is 0 (operation is disabled when a clock other than the subsystem clock is selected and the RTCLPC bit is not 0).		
A/D converter	Wakeup operation is enabled (switching to SNOOZE mode)		
D/A converter	Operable (status before STOP mode was set is retained)		
PGA, Comparator	Operable (only when the digital filter is not used and the external input (IVREFn) is selected as the reference voltage of the comparator)		
Serial array unit (SAU)	Wakeup operation is enabled only for CSIp and UARTq (switching to SNOOZE mode) Operation is disabled for anything other than CSIp and UARTq		
Serial interface (IICA)	Wakeup by address match operable		
Data transfer controller (DTC)	DTC activation source receiving operation enabled (switching to SNOOZE mode)		
Event link controller (ELC)	Operable function blocks can be linked		
Power-on-reset function	Operable		
Voltage detection function			
External interrupt			
Key interrupt function			
CRC operation function: High-speed CRC	Operation stopped		
CRC operation function: General-purpose CRC			
Illegal-memory access detection function			
RAM parity error detection function			
RAM guard function			
SFR guard function			

(**Remark** is listed on the next page.)

Remark Operation stopped: Operation is automatically stopped before switching to the STOP mode.
Operation disabled: Operation is stopped before switching to the STOP mode.
f_{IH}: High-speed on-chip oscillator clock f_{IL}: Low-speed on-chip oscillator clock
f_X: X1 clock f_{EX}: External main system clock
f_{XT}: XT1 clock f_{EXS}: External subsystem clock

(2) STOP mode release
The STOP mode can be released by the following two sources.

(a) Release by unmasked interrupt request
When an unmasked interrupt request is generated, the STOP mode is released. After the oscillation stabilization time has elapsed, if interrupt acknowledgment is enabled, vectored interrupt servicing is carried out. If interrupt acknowledgment is disabled, the next address instruction is executed.

Figure 26 - 4 STOP Mode Release by Interrupt Request Generation (1/2)

(1) When high-speed on-chip oscillator clock is used as CPU clock

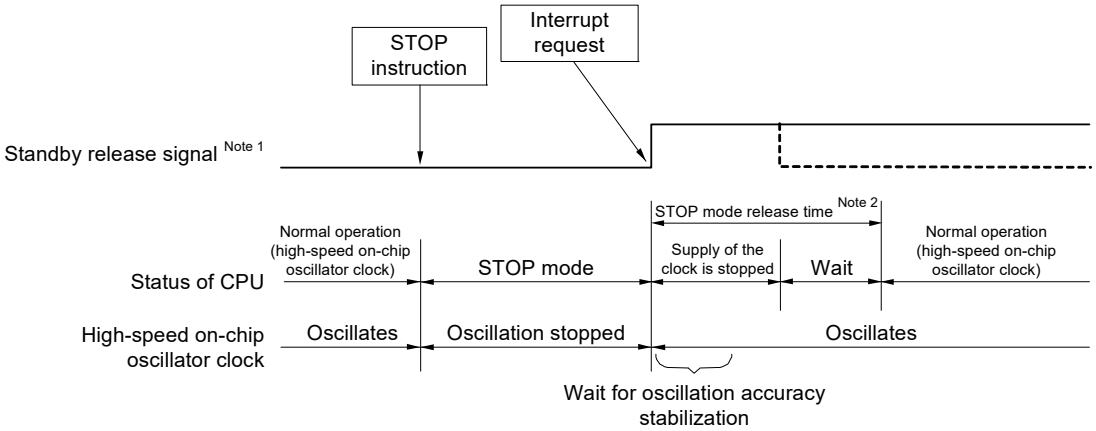

Note 1. For details of the standby release signal, see **Figure 24 - 1 Basic Configuration of Interrupt Function**.
Note 2. STOP mode release time
Supply of the clock is stopped:
- When FRQSEL4 = 0: 18 μs to 65 μs
- When FRQSEL4 = 1: 18 μs to 135 μs

Wait:
- When vectored interrupt servicing is carried out: 7 clocks
- When vectored interrupt servicing is not carried out: 1 clock

Caution **To shorten oscillation stabilization time after the STOP mode is released when the CPU operates with the high-speed system clock (X1 oscillation), temporarily switch the CPU clock to the high-speed on-chip oscillator clock before the execution of the STOP instruction.**

Remark 1. The clock supply stop time varies depending on the temperature conditions and STOP mode period.
Remark 2. The broken lines indicate the case when the interrupt request that has released the standby mode is acknowledged.

Figure 26 - 5 STOP Mode Release by Interrupt Request Generation (2/2)

(2) When high-speed system clock (X1 oscillation) is used as CPU clock

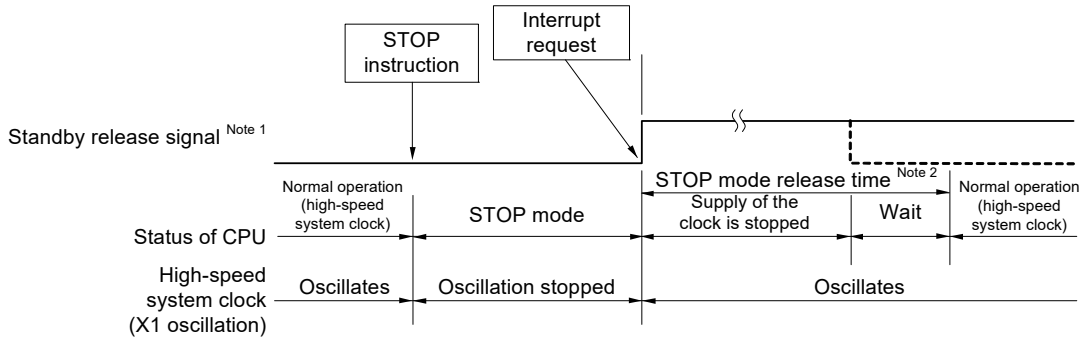

Note 1. For details of the standby release signal, see **Figure 24 - 1 Basic Configuration of Interrupt Function**.

Note 2. STOP mode release time

Supply of the clock is stopped:

- When FRQSEL4 = 0: 18 μs to "whichever is longer 65 μs or the oscillation stabilization time (set by OSTS)"
- When FRQSEL4 = 1: 18 μs to "whichever is longer 135 μs or the oscillation stabilization time (set by OSTS)"

Wait:

- When vectored interrupt servicing is carried out: 10 to 11 clocks
- When vectored interrupt servicing is not carried out: 4 to 5 clocks

(3) When high-speed system clock (external clock input) is used as CPU clock

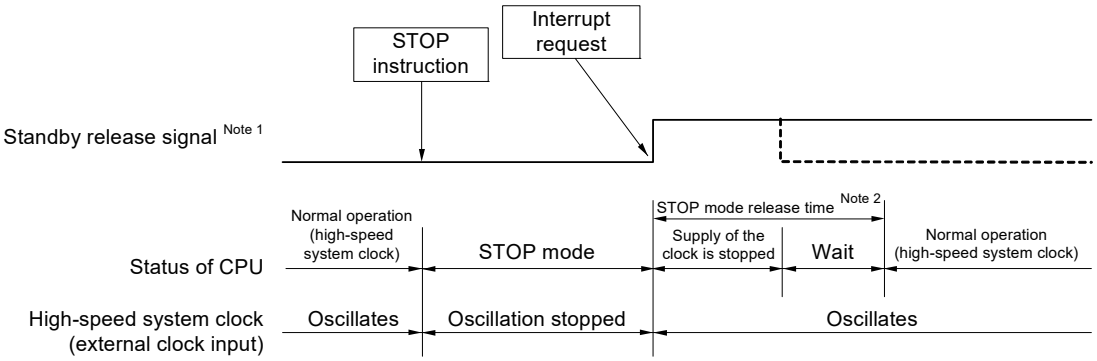

Note 1. For details of the standby release signal, see **Figure 24 - 1 Basic Configuration of Interrupt Function**.

Note 2. STOP mode release time

Supply of the clock is stopped:

- When FRQSEL4 = 0: 18 μs to 65 μs
- When FRQSEL4 = 1: 18 μs to 135 μs

Wait:

- When vectored interrupt servicing is carried out: 7 clocks
- When vectored interrupt servicing is not carried out: 1 clock

Caution **To reduce the oscillation stabilization time after release from the STOP mode while CPU operates based on the high-speed system clock (X1 oscillation), switch the clock to the high-speed on-chip oscillator clock temporarily before executing the STOP instruction.**

Remark 1. The clock supply stop time varies depending on the temperature conditions and STOP mode period.

Remark 2. The broken lines indicate the case when the interrupt request that has released the standby mode is acknowledged.

(b) Release by reset signal generation

When the reset signal is generated, STOP mode is released, and then, as in the case with a normal reset operation, the program is executed after branching to the reset vector address.

Figure 26 - 6 STOP Mode Release by Reset

(1) When high-speed on-chip oscillator clock is used as CPU clock

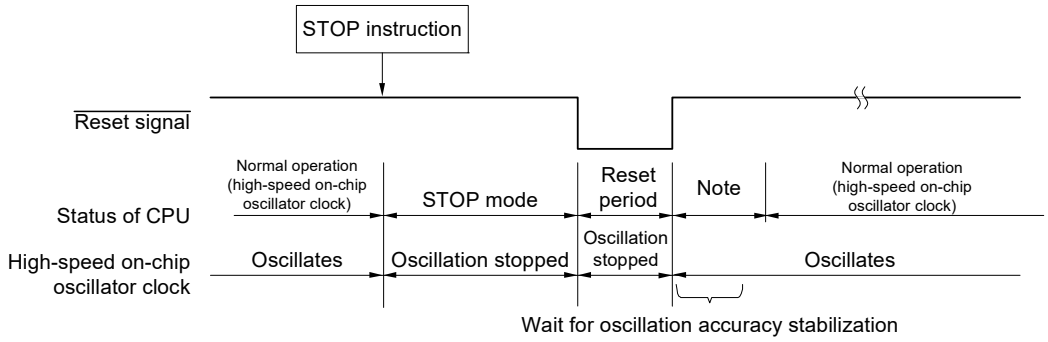

(2) When high-speed system clock is used as CPU clock

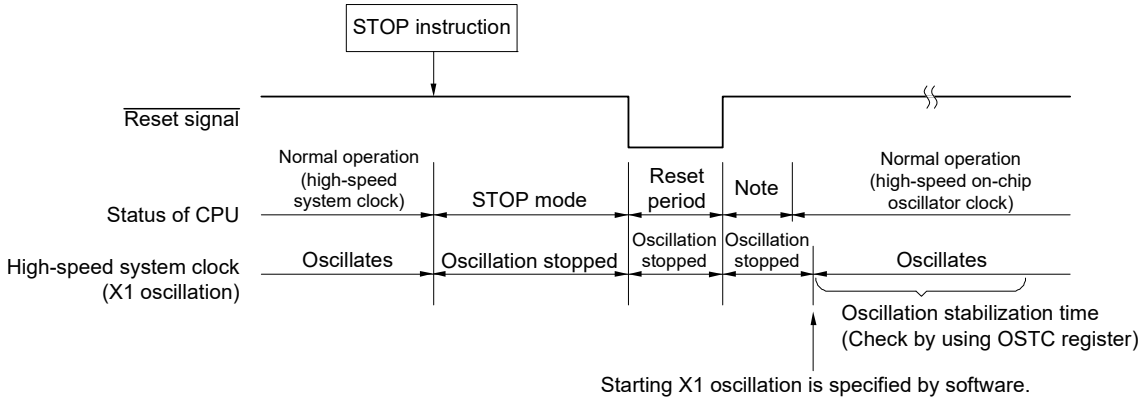

Note For the reset processing time, see **CHAPTER 27 RESET FUNCTION**.
For the reset processing time of the power-on-reset circuit (POR) and voltage detector (LVD), see **CHAPTER 28 POWER-ON-RESET CIRCUIT**.

26.3.3 SNOOZE mode

(1) SNOOZE mode setting and operating statuses

The SNOOZE mode can only be specified for CSI00, the A/D converter, or DTC. The UART0 can be specified only when FRQSEL4 in the option byte 000C2H is 0. Note that this mode can only be specified if the CPU clock is the high-speed on-chip oscillator clock.

When using CSI00 or UART0 in the SNOOZE mode, set up serial standby control register 0 (SSC0) before switching to the STOP mode. For details, see **19.3 Registers Controlling Serial Array Unit**.

When using the A/D converter in the SNOOZE mode, set up A/D converter mode register 2 (ADM2) before switching to the STOP mode. For details, see **15.3 Registers Controlling A/D Converter**.

When DTC transfer is used in SNOOZE mode, before switching to the STOP mode, allow DTC activation by interrupt to be used. During STOP mode, detecting DTC activation by interrupt enables DTC transit to SNOOZE mode, automatically. For details, see **22.3 Registers Controlling DTC**.

In SNOOZE mode transition, wait status to be only following time.

Transition time from STOP mode to SNOOZE mode

When FRQSEL4 = 0: 18 μs to 65 μs

When FRQSEL4 = 1: 18 μs to 135 μs

Remark Transition time from STOP mode to SNOOZE mode varies depending on the temperature conditions and the STOP mode period.

Transition time from SNOOZE mode to normal operation:

- When vectored interrupt servicing is carried out:

  HS (High-speed main) mode: “4.99 μs to 9.44 μs” + 7 clocks

  LS (Low-speed main) mode: “1.10 μs to 5.08 μs” + 7 clocks

  LV (Low-voltage main) mode: “16.58 μs to 25.40 μs” + 7 clocks

- When vectored interrupt servicing is not carried out:

  HS (High-speed main) mode: “4.99 μs to 9.44 μs” + 1 clock

  LS (Low-speed main) mode: “1.10 μs to 5.08 μs” + 1 clock

  LV (Low-voltage main) mode: “16.58 μs to 25.40 μs” + 1 clock

The operating statuses in the SNOOZE mode are shown next.

Table 26 - 4 Operating Statuses in SNOOZE Mode

Item \ STOP Mode Setting			During STOP mode, receiving data signal from CSIp and UARTq, inputting timer trigger signal to A/D converter, and generating DTC activation by interrupt When CPU is Operating on High-speed On-chip Oscillator Clock (f_{IH})
System clock			Clock supply to the CPU is stopped
	Main system clock	f_{IH}	Operation started
		f_X	Stopped
		f_{EX}	
	Subsystem clock	f_{XT}	Use of the status while in the STOP mode continues
		f_{EXS}	
	f_{IL}		Set by bits 0 (WDSTBYON) and 4 (WDTON) of option byte (000C0H), and WUTMMCK0 bit of subsystem clock supply mode control register (OSMC) • WUTMMCK0 = 1: Oscillates • WUTMMCK0 = 0 and WDTON = 0: Stops • WUTMMCK0 = 0, WDTON = 1, and WDSTBYON = 1: Oscillates • WUTMMCK0 = 0, WDTON = 1, and WDSTBYON = 0: Stops
CPU			Operation stopped
Code flash memory			
Data flash memory			
RAM			Operation stopped (Operable while in the DTC is executed)
Port (latch)			Use of the status while in the STOP mode continues
Timer array unit			Operation disabled
Real-time clock (RTC)			Operable
12-bit interval timer			
Watchdog timer			See **CHAPTER 14 WATCHDOG TIMER**.
Timer RJ			• Operable in event count mode when TRJIO input with no filer is selected • Operable when the subsystem clock is selected as the count source and RTCLPC in the OSMC register = 0 • Operable when the low-speed on-chip oscillator is selected as the count source • Operation is disabled under any conditions other than the above
Timer RD, PWMOPA			Operation disabled
Timer RG			
Timer RX			
Clock output/buzzer output			Operates when the subsystem clock is selected as the clock source for counting and the RTCLPC bit is 0 (operation is disabled when a clock other than the subsystem clock is selected and the RTCLPC bit is not 0).
A/D converter			Operable
D/A converter			Operable (Status before SNOOZE mode was set is retained)
PGA, Comparator			Operable (when digital filter is not used)
Serial array unit (SAU)			Operable only CSI00 and UART0 only. Operation disabled other than CSI00 and UART0.
IrDA			Operation disabled
Serial interface (IICA)			Operation disabled
Data transfer controller (DTC)			Operable
Event link controller (ELC)			Operable function blocks can be linked
Power-on-reset function			Operable
Voltage detection function			
External interrupt			
Key interrupt function			
CRC operation function		High-speed CRC	Operation stopped
		General-purpose CRC	Operation disabled
Illegal-memory access detection function			Operable when executing the DTC
RAM parity error detection function			
RAM guard function			
SFR guard function			

(**Remark** is listed on the next page)

Remark Operation stopped: Operation is automatically stopped before switching to the STOP mode.
Operation disabled: Operation is stopped before switching to the STOP mode.

f_{IH}: High-speed on-chip oscillator clock
f_{IL}: Low-speed on-chip oscillator clock
f_X: X1 clock
f_{EX}: External main system clock
f_{XT}: XT1 clock
f_{EXS}: External subsystem clock

(2) Timing diagram when the interrupt request signal is generated in the SNOOZE mode

Figure 26 - 7 When the Interrupt Request Signal is Generated in the SNOOZE Mode

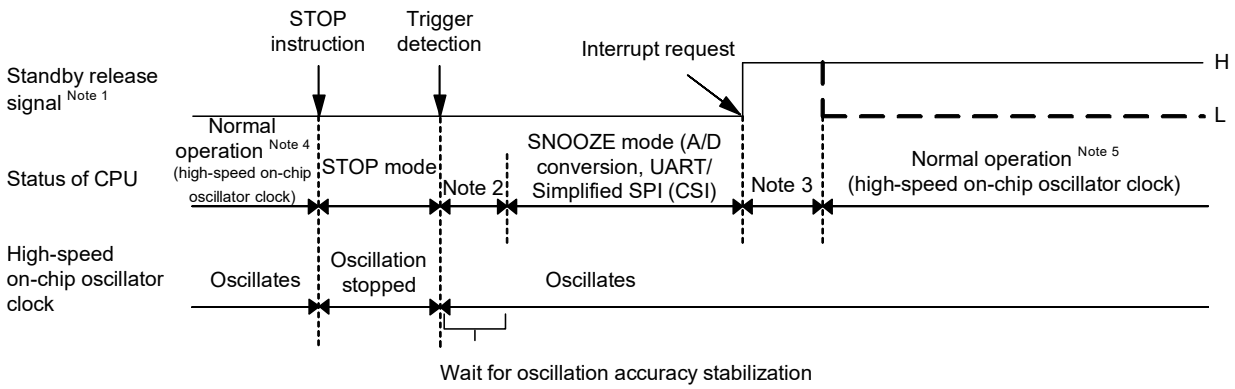

Note 1. For details of the standby release signal, see **Figure 24 - 1**.

Note 2. Transition time from STOP mode to SNOOZE mode

Note 3. Transition time from SNOOZE mode to normal operation

Note 4. Enable the SNOOZE mode (AWC = 1 or SWC = 1) immediately before switching to the STOP mode.

Note 5. Be sure to release the SNOOZE mode (AWC = 0 or SWC = 0) immediately after return to the normal operation.

(3) Timing diagram when the interrupt request signal is not generated in the SNOOZE mode

Figure 26 - 8 When the Interrupt Request Signal is not Generated in the SNOOZE Mode

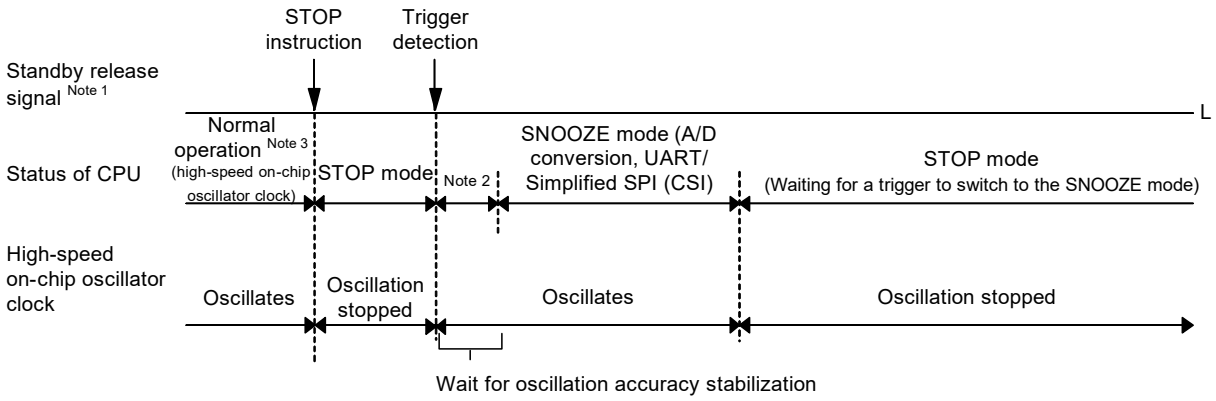

Note 1. For details of the standby release signal, see **Figure 24 - 1**.

Note 2. Transition time from STOP mode to SNOOZE mode

Note 3. Enable the SNOOZE mode (AWC = 1 or SWC = 1) immediately before switching to the STOP mode.

Remark For details of the SNOOZE mode function, see **CHAPTER 15 A/D CONVERTER** and **CHAPTER 19 SERIAL ARRAY UNIT**.

CHAPTER 27 RESET FUNCTION

The following seven operations are available to generate a reset signal.

(1) External reset input via $\overline{\text{RESET}}$ pin
(2) Internal reset by watchdog timer program loop detection
(3) Internal reset by comparison of supply voltage and detection voltage of power-on-reset (POR) circuit
(4) Internal reset by comparison of supply voltage of the voltage detector (LVD) and detection voltage
(5) Internal reset by execution of illegal instruction Note
(6) Internal reset by RAM parity error
(7) Internal reset by illegal-memory access

External and internal resets start program execution from the address at 00000H and 00001H when the reset signal is generated.
A reset is effected when a low level is input to the $\overline{\text{RESET}}$ pin, the watchdog timer overflows, or by POR and LVD circuit voltage detection, execution of illegal instruction Note, RAM parity error or illegal-memory access, and each item of hardware is set to the status shown in Table 27 - 1.

Note The illegal instruction is generated when instruction code FFH is executed.
Reset by the illegal instruction execution not issued by emulation with the in-circuit emulator or on-chip debug emulator.

Caution 1. For an external reset, input a low level for 10 μs or more to the $\overline{\text{RESET}}$ pin.
To perform an external reset upon power application, input a low level to the $\overline{\text{RESET}}$ pin, turn power on, continue to input a low level to the pin for 10 μs or more within the operating voltage range shown in 37.4 or 38.4 AC Characteristics, and then input a high level to the pin.

Caution 2. During reset input, the X1 clock, XT1 clock, high-speed on-chip oscillator clock, and low-speed on-chip oscillator clock oscillating. External main system clock input and external subsystem clock input become invalid.

Caution 3. The port pins become the following state because each SFR and 2nd SFR are initialized after reset.
- **P40: High-impedance during the external reset period or reset period by the POR. High level during other types of reset or after receiving a reset signal (connected to the on-chip pull-up resistance).**
- **P130: Low level during the reset period or after receiving a reset signal.**
- **Ports other than P40 and P130: High-impedance during the reset period or after receiving a reset signal.**

Figure 27 - 1 Block Diagram of Reset Function

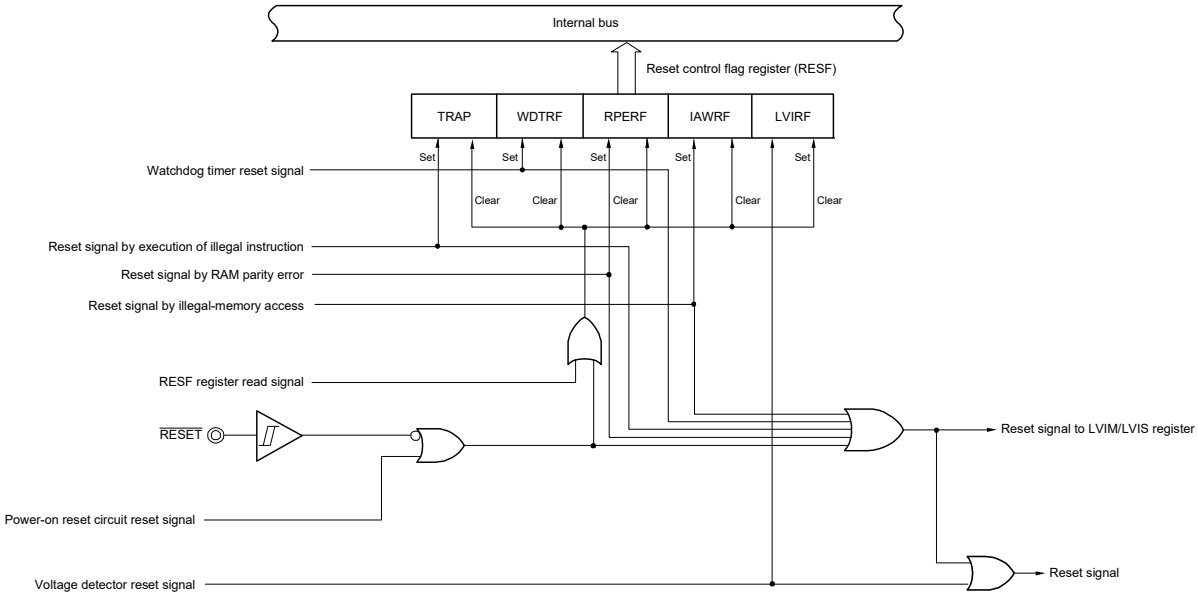

Caution An LVD circuit internal reset does not reset the LVD circuit.

Remark 1. LVIM: Voltage detection register

Remark 2. LVIS: Voltage detection level register

27.1 Timing of Reset Operation

This LSI is reset by input of the low level on the $\overline{\text{RESET}}$ pin and released from the reset state by input of the high level on the $\overline{\text{RESET}}$ pin. After reset processing, execution of the program with the high-speed on-chip oscillator clock as the operating clock starts.

Figure 27 - 2 Timing of Reset by $\overline{\text{RESET}}$ Input

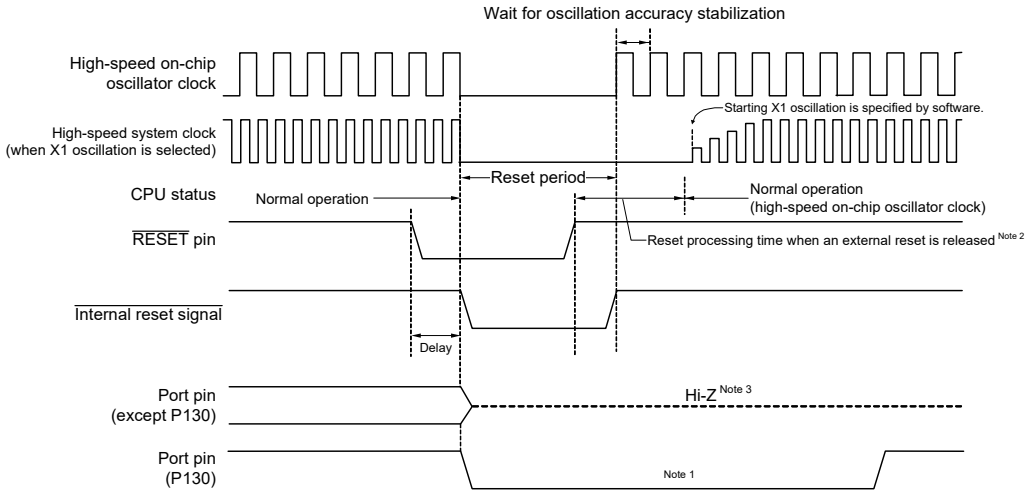

(**Notes** and **Caution** are listed on the next page.)

Release from the reset state is automatic in the case of a reset due to a watchdog timer overflow, execution of an illegal instruction, detection of a RAM parity error, or detection of illegal memory access. After reset processing, program execution starts with the high-speed on-chip oscillator clock as the operating clock.

Figure 27 - 3 Timing of Reset Due to Watchdog Timer Overflow, Execution of Illegal Instruction, Detection of RAM Parity Error, or Detection of Illegal Memory Access

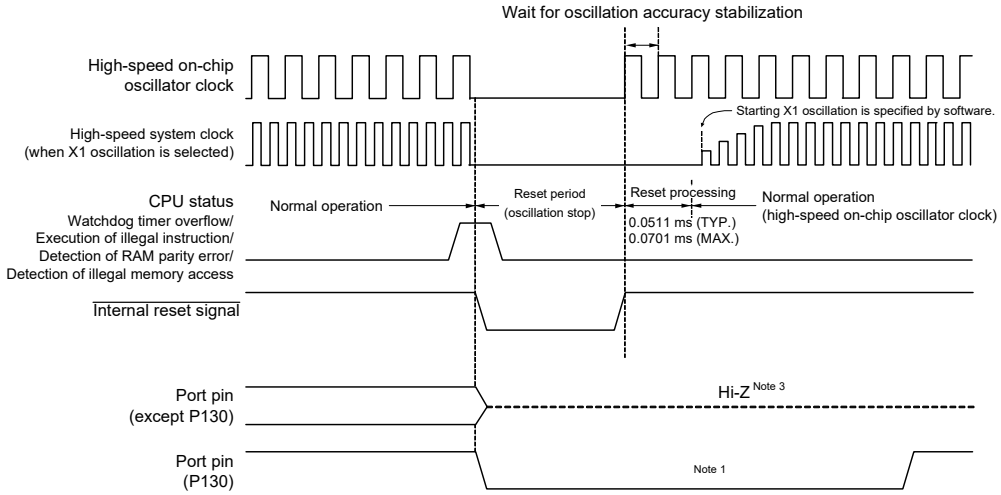

(**Notes** are listed on the next page.)

Note 1. When P130 is set to high-level output before reset is effected, the output signal of P130 can be dummy-output as a reset signal to an external device, because P130 outputs a low level when reset is effected. To release a reset signal to an external device, set P130 to high-level output by software.

Note 2. Reset times (times for release from the external reset state)

After the first release of the POR: 0.672 ms (TYP.), 0.832 ms (MAX.) when the LVD is in use.
0.399 ms (TYP.), 0.519 ms (MAX.) when the LVD is off.

After the second release of the POR: 0.531 ms (TYP.), 0.675 ms (MAX.) when the LVD is in use.
0.259 ms (TYP.), 0.362 ms (MAX.) when the LVD is off.

After power is supplied, a voltage stabilization waiting time of about 0.99 ms (TYP.) and up to 2.30 ms (MAX.) is required before reset processing starts after release of the external reset.

Note 3. The state of P40 is as follows.

- High-impedance during the external reset period or reset period by the POR.
- High level during other types of reset or after receiving a reset signal (connected to the on-chip pull-up resistance).

Reset by POR and LVD circuit supply voltage detection is automatically released when $V_{DD} \geq V_{POR}$ or $V_{DD} \geq V_{LVD}$ after the reset. After reset processing, execution of the program with the high-speed on-chip oscillator clock as the operating clock starts. For details, see **CHAPTER 28 POWER-ON-RESET CIRCUIT** or **CHAPTER 29 VOLTAGE DETECTOR**.

Remark V_{POR}: POR power supply rise detection voltage
V_{LVD}: LVD detection voltage

Table 27 - 1 Operation Statuses During Reset Period

Item			During Reset Period
System clock			Clock supply to the CPU is stopped.
	Main system clock	f_{IH}	Operation stopped
		f_X	Operation stopped (the X1 and X2 pins are input port mode)
		f_{EX}	Clock input invalid (the pin is input port mode)
	Subsystem clock	f_{XT}	Operation stopped (the XT1 and XT2 pins are input port mode)
		f_{EXS}	Clock input invalid (the pin is input port mode)
	f_{IL}		Operation stopped
CPU			
Code flash memory			
Data flash memory			
RAM			
Port (latch)			High impedance Note 1
Timer array unit			Operation stopped
Timer RJ			
Timer RD, PWMOPA			
Timer RG			
Timer RX			
Real-time clock (RTC)			
12-bit Interval timer			
Watchdog timer			
Clock output/buzzer output			
A/D converter			
D/A converter			
Comparator			
Serial array unit (SAU)			
Serial interface (IICA)			
Data transfer controller (DTC)			
Power-on-reset function			Detection operation possible
Voltage detection function			Operation is possible in the case of an LVD reset and stopped in the case of other types of reset.
External interrupt			Operation stopped
Key interrupt function			
CRC operation function		High-speed CRC	
		General-purpose CRC	
Illegal-memory access detection function			
RAM parity error detection function			
RAM guard function			
SFR guard function			

Note 1. P40 and P130 become the following state.
- P40: High-impedance during the external reset period or reset period by the POR. High level during other types of reset (connected to the on-chip pull-up resistance).
- P130: Low level during the reset period

Remark f_{IH}: High-speed on-chip oscillator clock
f_X: X1 oscillation clock
f_{EX}: External main system clock
f_{XT}: XT1 oscillation clock
f_{EXS}: External subsystem clock
f_{IL}: Low-speed on-chip oscillator clock

Table 27 - 2 Hardware Statuses After Reset Acknowledgment

Hardware		After Reset Acknowledgment Note
Program counter (PC)		The contents of the reset vector table (00000H, 00001H) are set.
Stack pointer (SP)		Undefined
Program status word (PSW)		06H
RAM	Data memory	Undefined
	General-purpose registers	Undefined

Note During reset signal generation or oscillation stabilization time wait, only the PC contents among the hardware statuses become undefined. All other hardware statuses remain unchanged after reset.

Remark For the state of the special function register (SFR) after receiving a reset signal, see **3.2.4 Special function register (SFR) area** and **3.2.5 Extended special function register (2nd SFR: 2nd Special Function Register) area**.

27.2 Register for Confirming Reset Source

27.2.1 Reset control flag register (RESF)

Many internal reset generation sources exist in the RL78 microcontroller. The reset control flag register (RESF) is used to store which source has generated the reset request.

The RESF register can be read by an 8-bit memory manipulation instruction.

$\overline{\text{RESET}}$ input, reset by power-on-reset (POR) circuit, and reading the RESF register clear TRAP, WDTRF, RPERF, IAWRF, and LVIRF flags.

Figure 27 - 4 Format of Reset control flag register (RESF)

Address: FFFA8H After reset: Undefined Note 1 R

Symbol	7	6	5	4	3	2	1	0
RESF	TRAP	0	0	WDTRF	0	RPERF	IAWRF	LVIRF

TRAP	Internal reset request by execution of illegal instruction Note 2
0	Internal reset request is not generated, or the RESF register is cleared.
1	Internal reset request is generated.

WDTRF	Internal reset request by watchdog timer (WDT)
0	Internal reset request is not generated, or the RESF register is cleared.
1	Internal reset request is generated.

RPERF	Internal reset request t by RAM parity
0	Internal reset request is not generated, or the RESF register is cleared.
1	Internal reset request is generated.

IAWRF	Internal reset request t by illegal-memory access
0	Internal reset request is not generated, or the RESF register is cleared.
1	Internal reset request is generated.

LVIRF	Internal reset request by voltage detector (LVD)
0	Internal reset request is not generated, or the RESF register is cleared.
1	Internal reset request is generated.

Note 1. The value after reset varies depending on the reset source. See **Table 27 - 3**.

Note 2. The illegal instruction is generated when instruction code FFH is executed.
Reset by the illegal instruction execution not issued by emulation with the in-circuit emulator or on-chip debug emulator.

Caution 1. Do not read data by a 1-bit memory manipulation instruction.

Caution 2. When enabling RAM parity error resets (RPERDIS = 0), be sure to initialize the used RAM area at data access or the used RAM area + 10 bytes at execution of instruction from the RAM area.
Reset generation enables RAM parity error resets (RPERDIS = 0). For details, see 30.3.3 RAM parity error detection function.

The status of the RESF register when a reset request is generated is shown in Table 27 - 3.

Table 27 - 3 RESF Register Status When Reset Request Is Generated

Reset Source / Flag	$\overline{\text{RESET}}$ Input	Reset by POR	Reset by Execution of Illegal Instruction	Reset by WDT	Reset by RAM parity error	Reset by illegal-memory access	Reset by LVD
TRAP	Cleared (0)	Cleared (0)	Set (1)	Held	Held	Held	Held
WDTRF			Held	Set (1)			
RPERF				Held	Set (1)		
IAWRF					Held	Set (1)	
LVIRF						Held	Set (1)

The RESF register is automatically cleared when it is read by an 8-bit memory manipulation instruction. Figure 27 - 5 shows the procedure for checking a reset source.

Figure 27 - 5 Procedure for Checking Reset Source

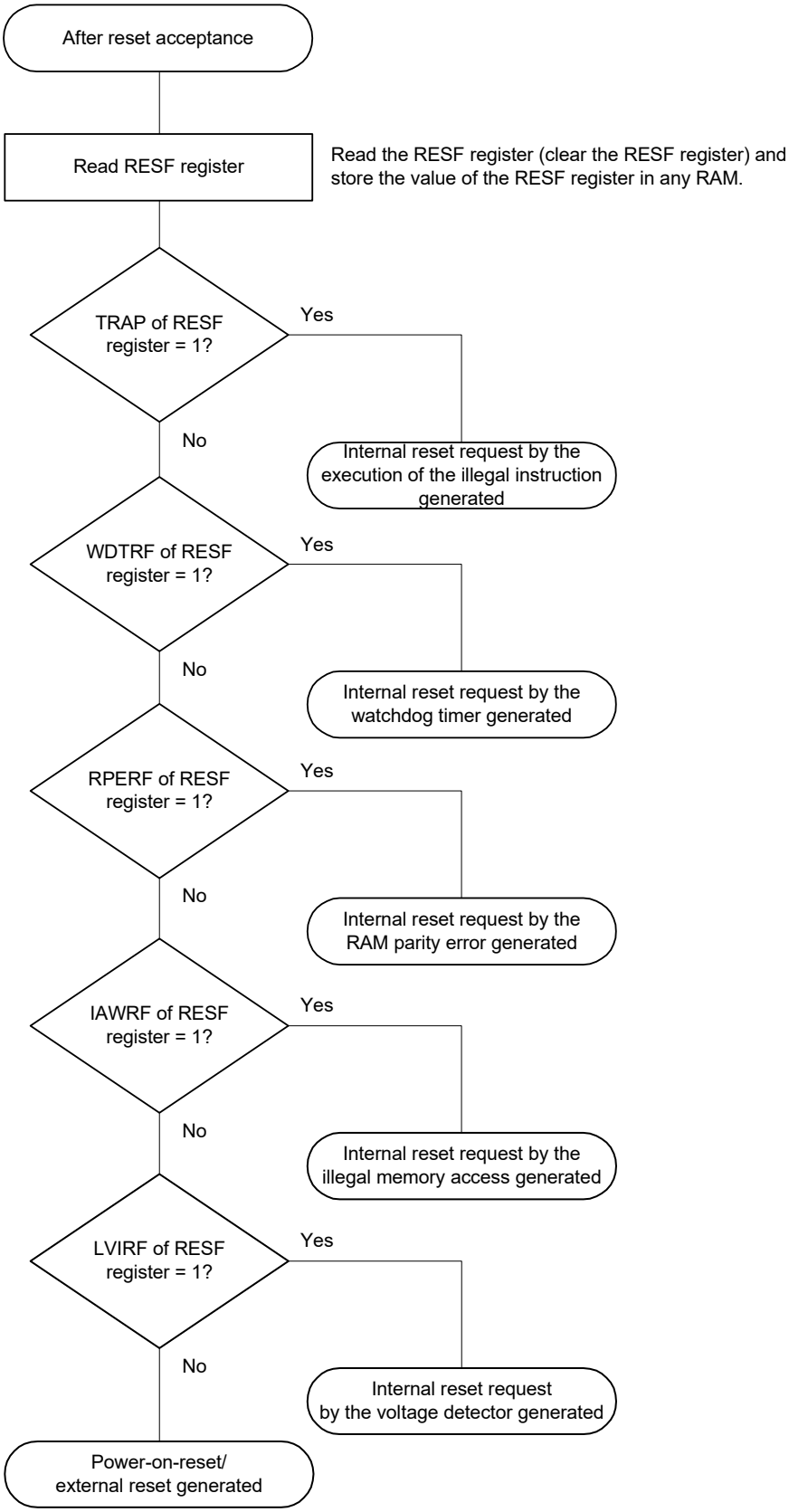

CHAPTER 28 POWER-ON-RESET CIRCUIT

28.1 Functions of Power-on-reset Circuit

The power-on-reset circuit (POR) has the following functions.

- Generates internal reset signal at power on.
  The reset signal is released when the supply voltage (V_{DD}) exceeds the detection voltage (V_{POR}). Note that the reset state must be retained until the operating voltage becomes in the range defined in **37.4** or **38.4 AC Characteristics**.
  This is done by utilizing the voltage detection circuit or controlling the externally input reset signal.

- Compares supply voltage (V_{DD}) and detection voltage (V_{PDR}), generates internal reset signal when $V_{DD} < V_{PDR}$.
  Note that, after power is supplied, this LSI should be placed in the STOP mode, or in the reset state by utilizing the voltage detector or externally input reset signal, before the operation voltage falls below the range defined in **37.4** or **38.4 AC Characteristics**. When restarting the operation, make sure that the operation voltage has returned within the range of operation.

Caution **If an internal reset signal is generated in the power-on-reset circuit, the reset control flag register (RESF) is cleared.**

Remark 1. The RL78 microcontroller incorporates multiple hardware functions that generate an internal reset signal. A flag that indicates the reset source is located in the reset control flag register (RESF) for when an internal reset signal is generated by the watchdog timer (WDT), voltage-detector (LVD), illegal instruction execution, RAM parity error, or illegal-memory access. The RESF register is not cleared to 00H and the flag is set to 1 when an internal reset signal is generated by the watchdog timer (WDT), voltage-detector (LVD), illegal instruction execution, RAM parity error, or illegal-memory access.
For details of the RESF register, see **CHAPTER 27 RESET FUNCTION**.

Remark 2. V_{POR}: POR power supply rise detection voltage
V_{PDR}: POR power supply fall detection voltage
For details, see **37.6.6** or **38.6.6 POR circuit characteristics**.

28.2 Configuration of Power-on-reset Circuit

The block diagram of the power-on-reset circuit is shown in Figure 28 - 1.

Figure 28 - 1 Block Diagram of Power-on-reset Circuit

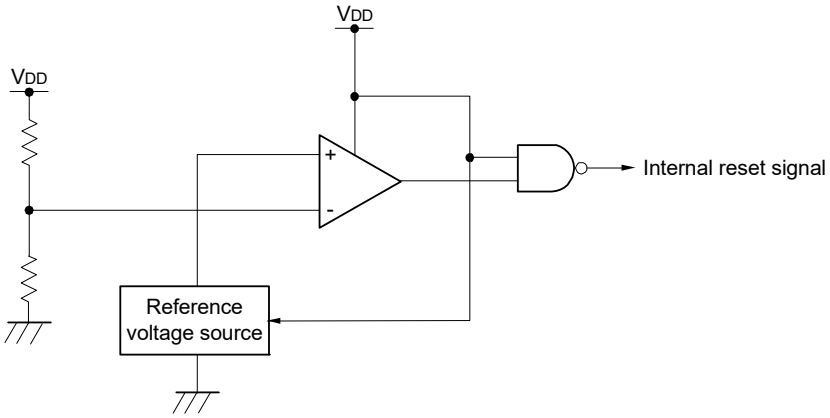

28.3 Operation of Power-on-reset Circuit

The timing of generation of the internal reset signal by the power-on-reset circuit and voltage detector is shown next.

Figure 28 - 2 Timing of Generation of Internal Reset Signal by Power-on-reset Circuit and Voltage Detector (1/3)

(1) When using an external reset by the $\overline{\text{RESET}}$ pin

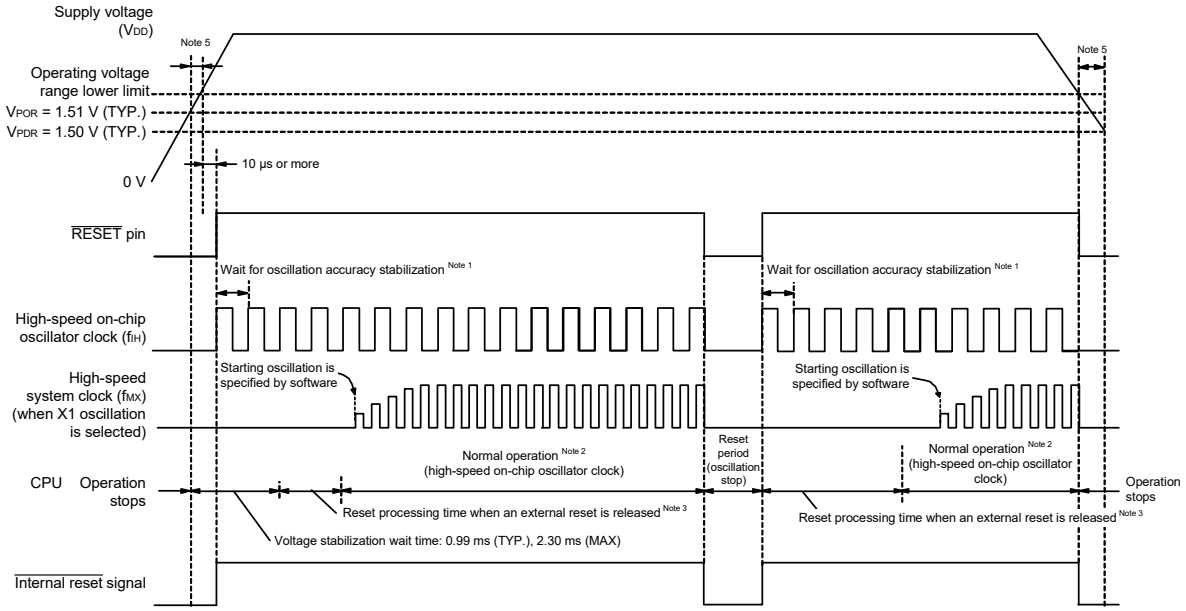

Note 1. The internal reset processing time includes the oscillation accuracy stabilization time of the high-speed on-chip oscillator clock.

Note 2. The high-speed on-chip oscillator clock and a high-speed system clock or subsystem clock can be selected as the CPU clock. To use the X1 clock, use the oscillation stabilization time counter status register (OSTC) to confirm the lapse of the oscillation stabilization time. To use the XT1 clock, use the timer function for confirmation of the lapse of the stabilization time.

Note 3. The time until normal operation starts includes the following reset processing time when the external reset is released (after the first release of POR) after the $\overline{\text{RESET}}$ signal is driven high (1) as well as the voltage stabilization wait time after V_{POR} (1.51 V, TYP.) is reached.
Reset processing time when the external reset is released is shown below.
After the first release of $\overline{\text{RESET}}$ following POR: 0.672 ms (TYP.), 0.832 ms (MAX.) (when the LVD is in use)
0.399 ms (TYP.), 0.519 ms (MAX.) (when the LVD is off)

Note 4. Reset processing time when the external reset is released after the second release of POR is shown below.
After the second release of $\overline{\text{RESET}}$ following POR: 0.531 ms (TYP.), 0.675 ms (MAX.) (when the LVD is in use)
0.259 ms (TYP.), 0.362 ms (MAX.) (when the LVD is off)

Note 5. After power is supplied, the reset state must be retained until the operating voltage becomes in the range defined in **37.4** or **38.4 AC Characteristics**. This is done by controlling the externally input reset signal.
After power supply is turned off, this LSI should be placed in the STOP mode, or in the reset state by utilizing the voltage detection circuit or externally input reset signal, before the voltage falls below the operating range. When restarting the operation, make sure that the operation voltage has returned within the range of operation.

Remark V_{POR}: POR power supply rise detection voltage
V_{PDR}: POR power supply fall detection voltage

Caution **For power-on reset, be sure to use the externally input reset signal on the $\overline{\text{RESET}}$ pin when the LVD is off. For details, see CHAPTER 29 VOLTAGE DETECTOR.**

Figure 28 - 3 Timing of Generation of Internal Reset Signal by Power-on-reset Circuit and Voltage Detector (2/3)

(2) LVD is interrupt & reset mode (option byte 000C1: LVIMDS1, LVIMDS0 = 1, 0)

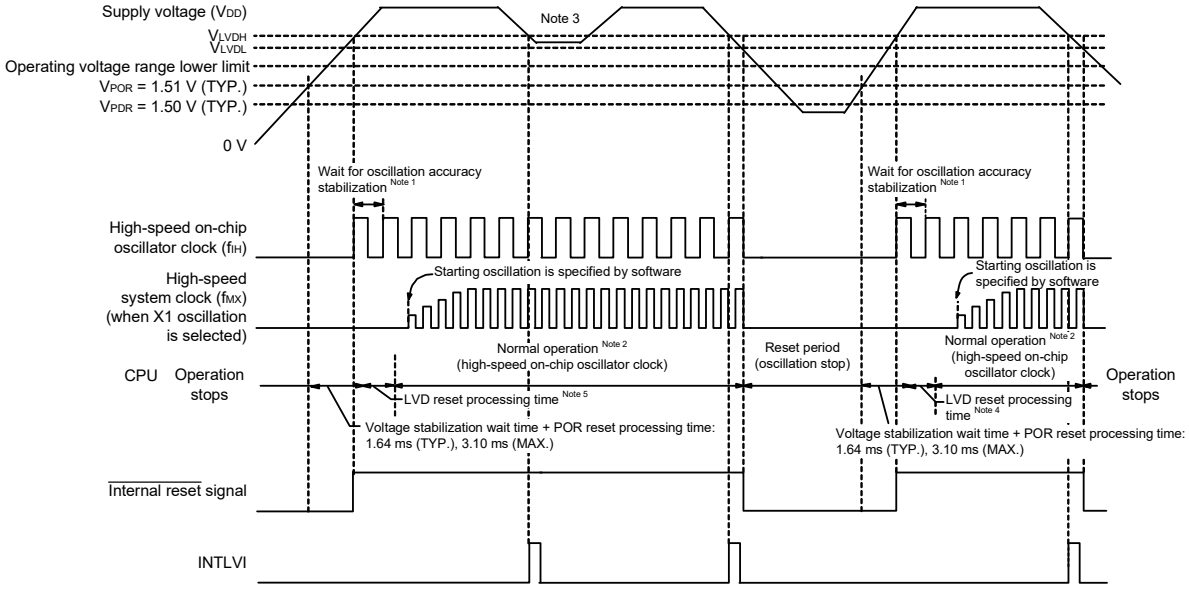

Note 1. The internal reset processing time includes the oscillation accuracy stabilization time of the high-speed on-chip oscillator clock.

Note 2. The high-speed on-chip oscillator clock and a high-speed system clock or subsystem clock can be selected as the CPU clock. To use the X1 clock, use the oscillation stabilization time counter status register (OSTC) to confirm the lapse of the oscillation stabilization time. To use the XT1 clock, use the timer function for confirmation of the lapse of the stabilization time.

Note 3. After the interrupt request signal (INTLVI) is generated, the LVILV and LVIMD bits of the voltage detection level register (LVIS) are automatically set to 1. After INTLVI is generated, appropriate settings should be made according to **Figure 29 - 10 Setting Procedure for Operating Voltage Check and Reset** and **Figure 29 - 11 Setting Procedure for Initial Setting of Interrupt and Reset Mode**, taking into consideration that the supply voltage might return to the high voltage detection level (V_{LVDH}) or higher without falling below the low voltage detection level (V_{LVDL}).

Note 4. The time until normal operation starts includes the following LVD reset processing time after the LVD detection level (V_{LVDH}) is reached as well as the voltage stabilization wait + POR reset processing time after the V_{POR} (1.51 V, TYP.) is reached.
LVD reset processing time: 0 ms to 0.0701 ms (MAX.)

Remark V_{LVDH}, V_{LVDL}: LVD detection voltage
V_{POR}: POR power supply rise detection voltage
V_{PDR}: POR power supply fall detection voltage

Figure 28 - 4 Timing of Generation of Internal Reset Signal by Power-on-reset Circuit and Voltage Detector (3/3)

(3) LVD reset mode (option byte 000C1H: LVIMDS1, LVIMDS0 = 1, 1)

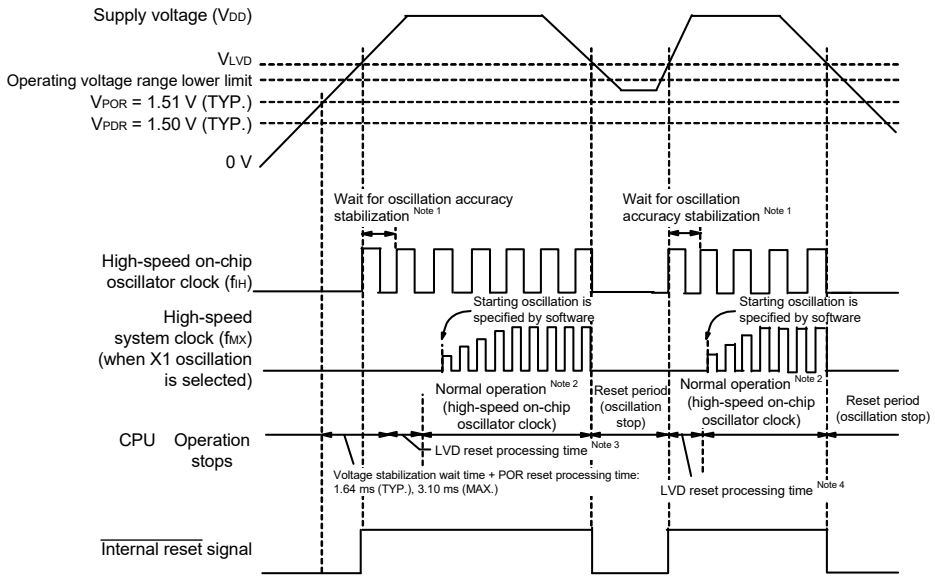

Note 1. The internal reset processing time includes the oscillation accuracy stabilization time of the high-speed on-chip oscillator clock.

Note 2. The high-speed on-chip oscillator clock and a high-speed system clock or subsystem clock can be selected as the CPU clock. To use the X1 clock, use the oscillation stabilization time counter status register (OSTC) to confirm the lapse of the oscillation stabilization time. To use the XT1 clock, use the timer function for confirmation of the lapse of the stabilization time.

Note 3. The time until normal operation starts includes the following LVD reset processing time after the LVD detection level (V_{LVD}) is reached as well as the voltage stabilization wait + POR reset processing time after the V_{POR} (1.51 V, TYP.) is reached.
LVD reset processing time: 0 ms to 0.0701 ms (MAX.)

Note 4. When the power supply voltage is below the lower limit for operation and the power supply voltage is then restored after an internal reset is generated only by the voltage detector (LVD), the following LVD reset processing time is required after the LVD detection level (V_{LVD}) is reached.
LVD reset processing time: 0.0511 ms (TYP.), 0.0701 ms (MAX.)

Remark 1. V_{LVDH}, V_{LVDL}: LVD detection voltage
V_{POR}: POR power supply rise detection voltage
V_{PDR}: POR power supply fall detection voltage

Remark 2. When the LVD interrupt mode is selected (option byte 000C1H: LVIMD1 = 0, LVIMD0 = 1), the time until normal operation starts after power is turned on is the same as the time specified in Note 3 of Figure 28 - 4 (3).

CHAPTER 29 VOLTAGE DETECTOR

29.1 Functions of Voltage Detector

The operation mode and detection voltages (V_{LVDH}, V_{LVDL}, V_{LVD}) for the voltage detector is set by using the option byte (000C1H). The voltage detector (LVD) has the following functions.

- The LVD circuit compares the supply voltage (V_{DD}) with the detection voltage (V_{LVDH}, V_{LVDL}, V_{LVD}), and generates an internal reset or internal interrupt signal.
- The detection level for the power supply detection voltage (V_{LVDH}, V_{LVDL}) can be selected by using the option byte as one of 14 levels (for details, see **CHAPTER 32 OPTION BYTE**).
- Operable in STOP mode.
- After power is supplied, the reset state must be retained until the operating voltage becomes in the range defined in **37.4** or **38.4** AC Characteristics. This is done by utilizing the voltage detector or controlling the externally input reset signal. After the power supply is turned off, this LSI should be placed in the STOP mode, or placed in the reset state by utilizing the voltage detector or controlling the externally input reset signal before the voltage falls below the operating range. The range of operating voltage varies with the setting of the user option byte (000C2H or 010C2H).

(a) Interrupt & reset mode (option byte LVIMDS1, LVIMDS0 = 1, 0)
The two detection voltages (V_{LVDH}, V_{LVDL}) are selected by the option byte 000C1H. The high-voltage detection level (V_{LVDH}) is used for releasing resets and generating interrupts. The low-voltage detection level (V_{LVDL}) is used for generating resets.

(b) Reset mode (option byte LVIMDS1, LVIMDS0 = 1, 1)
The detection voltage (V_{LVD}) selected by the option byte 000C1H is used for triggering and ending resets.

(c) Interrupt mode (option byte LVIMDS1, LVIMDS0 = 0, 1)
The detection voltage (V_{LVD}) selected by the option byte 000C1H is used for generating interrupts/reset release.

The reset and internal interrupt signals are generated in each mode as follows.

Interrupt & reset mode (LVIMDS1, LVIMDS0 = 1, 0)	Reset mode (LVIMDS1, LVIMDS0 = 1, 1)	Interrupt mode (LVIMDS1, LVIMDS0 = 0, 1)
Generates an interrupt request signal by detecting $V_{DD} < V_{LVDH}$ when the operating voltage falls, and releases an internal reset by detecting $V_{DD} < V_{LVDL}$. Releases an internal reset by detecting $V_{DD} \geq V_{LVDH}$.	Releases an internal reset by detecting $V_{DD} \geq V_{LVD}$. Generates an internal reset by detecting $V_{DD} < V_{LVD}$.	Retains the state of an internal reset by the LVD immediately after a reset until $V_{DD} \geq V_{LVD}$. Releases the LVD internal reset by detecting $V_{DD} \geq V_{LVD}$. Generates an interrupt request signal (INTLVI) by detecting $V_{DD} < V_{LVD}$ or $V_{DD} \geq V_{LVD}$ after the LVD internal reset is released.

While the voltage detector is operating, whether the supply voltage is more than or less than the detection level can be checked by reading the voltage detection flag (LVIF: bit 0 of the voltage detection register (LVIM)).
Bit 0 (LVIRF) of the reset control flag register (RESF) is set to 1 if reset occurs. For details of the RESF register, see **CHAPTER 27 RESET FUNCTION**.

29.2 Configuration of Voltage Detector

The block diagram of the voltage detector is shown in Figure 29 - 1.

Figure 29 - 1 Block Diagram of Voltage Detector

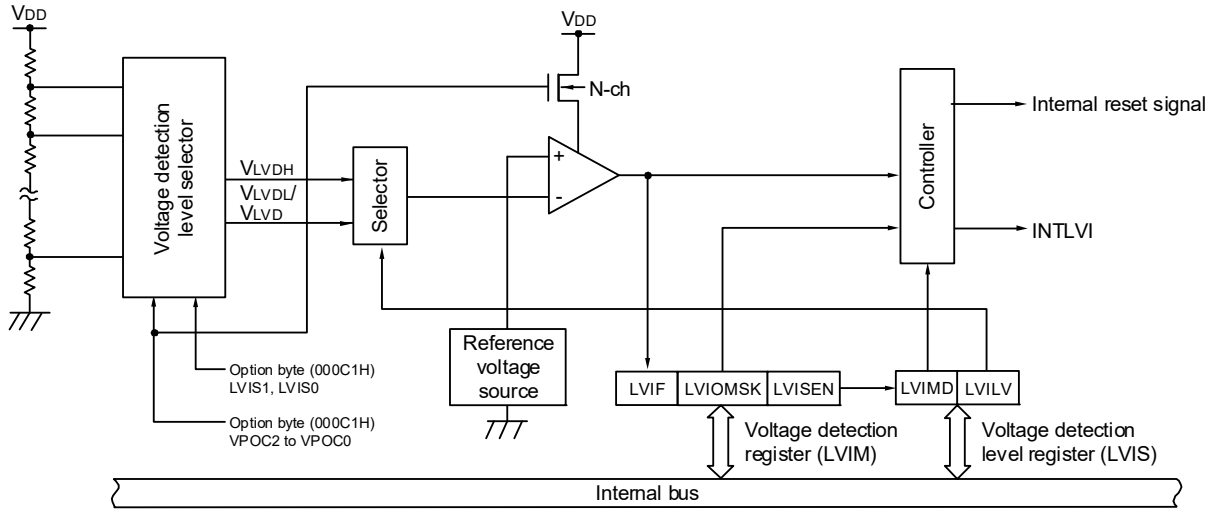

29.3 Registers Controlling Voltage Detector

The voltage detector is controlled by the following registers.

- Voltage detection register (LVIM)
- Voltage detection level register (LVIS)

29.3.1 Voltage detection register (LVIM)

This register is used to specify whether to enable or disable rewriting the voltage detection level register (LVIS), as well as to check the LVD output mask status.

This register can be set by a 1-bit or 8-bit memory manipulation instruction.

Reset signal generation clears this register to 00H.

Figure 29 - 2 Format of Voltage detection register (LVIM)

Address: FFFA9H After reset: 00H Note 1 R/W Note 2

Symbol	<7>	6	5	4	3	2	<1>	<0>
LVIM	LVISEN Note 3	0	0	0	0	0	LVIOMSK	LVIF

LVISEN Note 3	Specification of whether to enable or disable rewriting the voltage detection level register (LVIS)
0	Disabling of rewriting the LVIS register (LVIOMSK = 0 (Mask of LVD output is invalid)
1	Enabling of rewriting the LVIS register Note 3 (LVIOMSK = 1 (Mask of LVD output is valid)

LVIOMSK	Mask status flag of LVD output
0	Mask of LVD output is invalid
1	Mask of LVD output is valid Note 4

LVIF	Voltage detection flag
0	Supply voltage (V_{DD}) ≥ detection voltage (V_{LVD}), or when LVD is off
1	Supply voltage (V_{DD}) < detection voltage (V_{LVD})

Note 1. The reset value changes depending on the reset source.
If the LVIS register is reset by LVD, it is not reset but holds the current value. In other reset, LVISEN is cleared to 0.

Note 2. Bits 0 and 1 are read-only.

Note 3. LVISEN and LVIOMSK can only be set in the interrupt & reset mode (option byte LVIMDS1, LVIMDS0 = 1, 0). Do not change the initial value in other modes.

Note 4. LVIOMSK bit is only automatically set to “1” when the interrupt & reset mode is selected (option byte LVIMDS1, LVIMDS0 = 1, 0) and reset or interrupt by LVD is masked.
- Period during LVISEN = 1
- Waiting period from the time when LVD interrupt is generated until LVD detection voltage becomes stable
- Waiting period from the time when the value of LVILV bit changes until LVD detection voltage becomes stable

29.3.2 Voltage detection level register (LVIS)

This register selects the voltage detection level.

This register can be set by a 1-bit or 8-bit memory manipulation instruction.

Reset signal generation input sets this register to 00H/01H/81H Note 1.

Figure 29 - 3 Format of Voltage detection level register (LVIS)

Address: FFFAAH After reset:00H/01H/81H Note 1 R/W

Symbol	<7>	6	5	4	3	2	1	<0>
LVIS	LVIMD Note 2	0	0	0	0	0	0	LVILV Note 2

LVIMD Note 2	Operation mode of voltage detection
0	Interrupt mode
1	Reset mode

LVILV Note 2	LVD detection level
0	High-voltage detection level (V_{LVDH})
1	Low-voltage detection level (V_{LVDL} or V_{LVD})

Note 1. The reset value changes depending on the reset source and the setting of the option byte.
This register is not cleared (00H) by LVD reset.
The generation of reset signal other than an LVD reset sets as follows.
- When option byte LVIMDS1, LVIMDS0 = 1, 0: 00H
- When option byte LVIMDS1, LVIMDS0 = 1, 1: 81H
- When option byte LVIMDS1, LVIMDS0 = 0, 1: 01H

Note 2. Writing “0” can only be allowed in the interrupt & reset mode (option byte LVIMDS1, LVIMDS0 = 1, 0). Do not set LVIMD and LVILV in other cases. The value is switched automatically when reset or interrupt is generated in the interrupt & reset mode.

Caution 1. Rewrite the value of the LVIS register according to Figures 29 - 10 and 29 - 11.

Caution 2. Specify the LVD operation mode and detection voltage (V_{LVDH}, V_{LVDL}, V_{LVD}) of each mode by using the option byte 000C1H. Figure 29 - 4 shows the format of the user option byte (000C1H/010C1H). For details about the option byte, see CHAPTER 32 OPTION BYTE.

Figure 29 - 4 Format of User Option Byte (000C1H/010C1H) (1/2)

Address: 000C1H/010C1H Note

7	6	5	4	3	2	1	0
VPOC2	VPOC1	VPOC0	1	LVIS1	LVIS0	LVIMDS1	LVIMDS0

• LVD setting (interrupt & reset mode)

Detection voltage			Option byte Setting Value						
V_{LVDH}		V_{LVDL}	VPOC2	VPOC1	VPOC0	LVIS1	LVIS0	Mode setting	
Rising edge	Falling edge	Falling edge						LVIMDS1	LVIMDS0
1.77 V	1.73 V	1.63 V	0	0	0	1	0	1	0
1.88 V	1.84 V					0	1		
2.92 V	2.86 V					0	0		
1.98 V	1.94 V	1.84 V		0	1	1	0		
2.09 V	2.04 V					0	1		
3.13 V	3.06 V					0	0		
2.61 V	2.55 V	2.45 V		1	0	1	0		
2.71 V	2.65 V					0	1		
3.75 V	3.67 V					0	0		
2.92 V	2.86 V	2.75 V		1	1	1	0		
3.02 V	2.96 V					0	1		
4.06 V	3.98 V					0	0		
—			Settings other than the above are prohibited						

• LVD setting (reset mode)

Detection voltage		Option byte Setting Value						
V_{LVD}		VPOC2	VPOC1	VPOC0	LVIS1	LVIS0	Mode setting	
Rising edge	Falling edge						LVIMDS1	LVIMDS0
1.67 V	1.63 V	0	0	0	1	1	1	1
1.77 V	1.73 V		0	0	1	0		
1.88 V	1.84 V		0	1	1	1		
1.98 V	1.94 V		0	1	1	0		
2.09 V	2.04 V		0	1	0	1		
2.50 V	2.45 V		1	0	1	1		
2.61 V	2.55 V		1	0	1	0		
2.71 V	2.65 V		1	0	0	1		
2.81 V	2.75 V		1	1	1	1		
2.92 V	2.86 V		1	1	1	0		
3.02 V	2.96 V		1	1	0	1		
3.13 V	3.06 V		0	1	0	0		
3.75 V	3.67 V		1	0	0	0		
4.06 V	3.98 V		1	1	0	0		
—		Settings other than the above are prohibited						

Note Set the same value as 000C1H to 010C1H when the boot swap operation is used because 000C1H is replaced by 010C1H.

Remark 1. For details on the LVD circuit, see **CHAPTER 29 VOLTAGE DETECTOR**.

Remark 2. The detection voltage is a TYP. value. For details, see **37.6.7** or **38.6.7** LVD circuit characteristics.

(**Cautions** are listed on the next page.)

Figure 29 - 5 Format of User Option Byte (000C1H/010C1H) (2/2)

Address: 000C1H/010C1H[Note]

7	6	5	4	3	2	1	0
VPOC2	VPOC1	VPOC0	1	LVIS1	LVIS0	LVIMDS1	LVIMDS0

• LVD setting (interrupt mode)

Detection voltage		Option byte Setting Value						
V_{LVD}		VPOC2	VPOC1	VPOC0	LVIS1	LVIS0	Mode setting	
Rising edge	Falling edge						LVIMDS1	LVIMDS0
1.67 V	1.63 V	0	0	0	1	1	0	1
1.77 V	1.73 V		0	0	1	0		
1.88 V	1.84 V		0	1	1	1		
1.98 V	1.94 V		0	1	1	0		
2.09 V	2.04 V		0	1	0	1		
2.50 V	2.45 V		1	0	1	1		
2.61 V	2.55 V		1	0	1	0		
2.71 V	2.65 V		1	0	0	1		
2.81 V	2.75 V		1	1	1	1		
2.92 V	2.86 V		1	1	1	0		
3.02 V	2.96 V		1	1	0	1		
3.13 V	3.06 V		0	1	0	0		
3.75 V	3.67 V		1	0	0	0		
4.06 V	3.98 V		1	1	0	0		
—		Settings other than the above are prohibited						

• LVD off (Using external reset by $\overline{\text{RESET}}$ pin)

Detection voltage		Option byte Setting Value						
V_{LVD}		VPOC2	VPOC1	VPOC0	LVIS1	LVIS0	Mode setting	
Rising edge	Falling edge						LVIMDS1	LVIMDS0
—	—	1	×	×	×	×	×	1
—		Settings other than the above are prohibited						

Note Set the same value as 000C1H to 010C1H when the boot swap operation is used because 000C1H is replaced by 010C1H.

Caution 1. Set bit 4 to 1.

Caution 2. After power is supplied, the reset state must be retained until the operating voltage becomes in the range defined in 37.4 or 38.4 AC Characteristics. This is done by utilizing the voltage detection circuit or controlling the externally input reset signal. After the power supply is turned off, this LSI should be placed in the STOP mode, or placed in the reset state by utilizing the voltage detection circuit or controlling the externally input reset signal, before the voltage falls below the operating range. The range of operating voltage varies with the setting of the user option byte (000C2H or 010C2H).

Remark 1. ×: Don't care

Remark 2. For details on the LVD circuit, see **CHAPTER 29 VOLTAGE DETECTOR**.

Remark 3. The detection voltage is a TYP. value. For details, see **37.6.7** or **38.6.7** LVD circuit characteristics.

29.4 Operation of Voltage Detector

29.4.1 When used as reset mode

Specify the operation mode (the reset mode (LVIMDS1, LVIMDS0 = 1, 1)) and the detection voltage (V_{LVD}) by using the option byte 000C1H.

The operation is started in the following initial setting state when the reset mode is set.

- Bit 7 (LVISEN) of the voltage detection register (LVIM) is set to 0 (disable rewriting of voltage detection level register (LVIS))
- The initial value of the voltage detection level select register (LVIS) is set to 81H.
  Bit 7 (LVIMD) is 1 (reset mode).
  Bit 0 (LVILV) is 1 (low-voltage detection level: V_{LVD}).

• Operation in LVD reset mode

In the reset mode (option byte LVIMDS1, LVIMDS0 = 1, 1), the state of an internal reset by LVD is retained until the supply voltage (V_{DD}) exceeds the voltage detection level (V_{LVD}) after power is supplied. The internal reset is released when the supply voltage (V_{DD}) exceeds the voltage detection level (V_{LVD}).

At the fall of the operating voltage, an internal reset by LVD is generated when the supply voltage (V_{DD}) falls below the voltage detection level (V_{LVD}).

Figure 29 - 6 shows the timing of the internal reset signal generated in the LVD reset mode.

Figure 29 - 6 Timing of Voltage Detector Internal Reset Signal Generation (Option Byte LVIMDS1, LVIMDS0 = 1, 1)

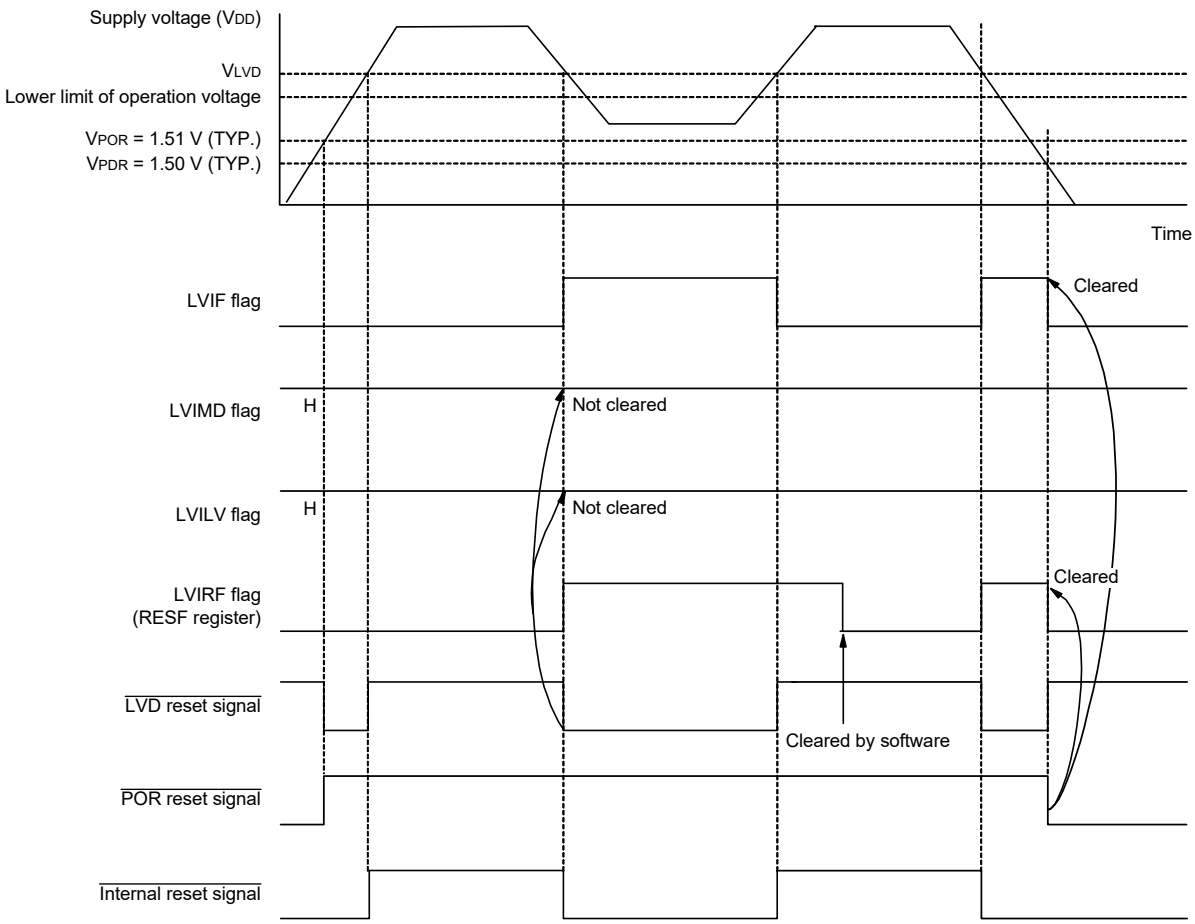

Remark V_{POR}: POR power supply rise detection voltage
V_{PDR}: POR power supply fall detection voltage

29.4.2 When used as interrupt mode

Specify the operation mode (the interrupt mode (LVIMDS1, LVIMDS0 = 0, 1)) and the detection voltage (V_{LVD}) by using the option byte 000C1H.

The operation is started in the following initial setting state when the interrupt mode is set.

- Bit 7 (LVISEN) of the voltage detection register (LVIM) is set to 0 (disable rewriting of voltage detection level register (LVIS))
- The initial value of the voltage detection level select register (LVIS) is set to 01H.
  Bit 7 (LVIMD) is 0 (interrupt mode).
  Bit 0 (LVILV) is 1 (low-voltage detection level: V_{LVD}).

• Operation in LVD interrupt mode

In interrupt mode (LVIMDS1 and LVIMDS0 = 0 and 1 in the option byte), the state of an internal reset by the LVD is retained immediately after a reset until the supply voltage (V_{DD}) exceeds the voltage detection level (V_{LVD}). The LVD internal reset is released when the supply voltage (V_{DD}) exceeds the voltage detection level (V_{LVD}).

After the LVD internal reset is released, an interrupt request signal (INTLVI) by the LVD is generated when the supply voltage (V_{DD}) exceeds the voltage detection level (V_{LVD}). When the voltage falls, this LSI should be placed in the STOP mode, or placed in the reset state by controlling the externally input reset signal, before the voltage falls below the operating voltage range defined in **37.4** or **38.4** AC Characteristics. When restarting the operation, make sure that the operation voltage has returned within the range of operation.

Figure 29 - 7 shows the timing of the interrupt request signal generated in the LVD interrupt mode.

Figure 29 - 7 Timing of Voltage Detector Internal Interrupt Signal Generation
(Option Byte LVIMDS1, LVIMDS0 = 0, 1)

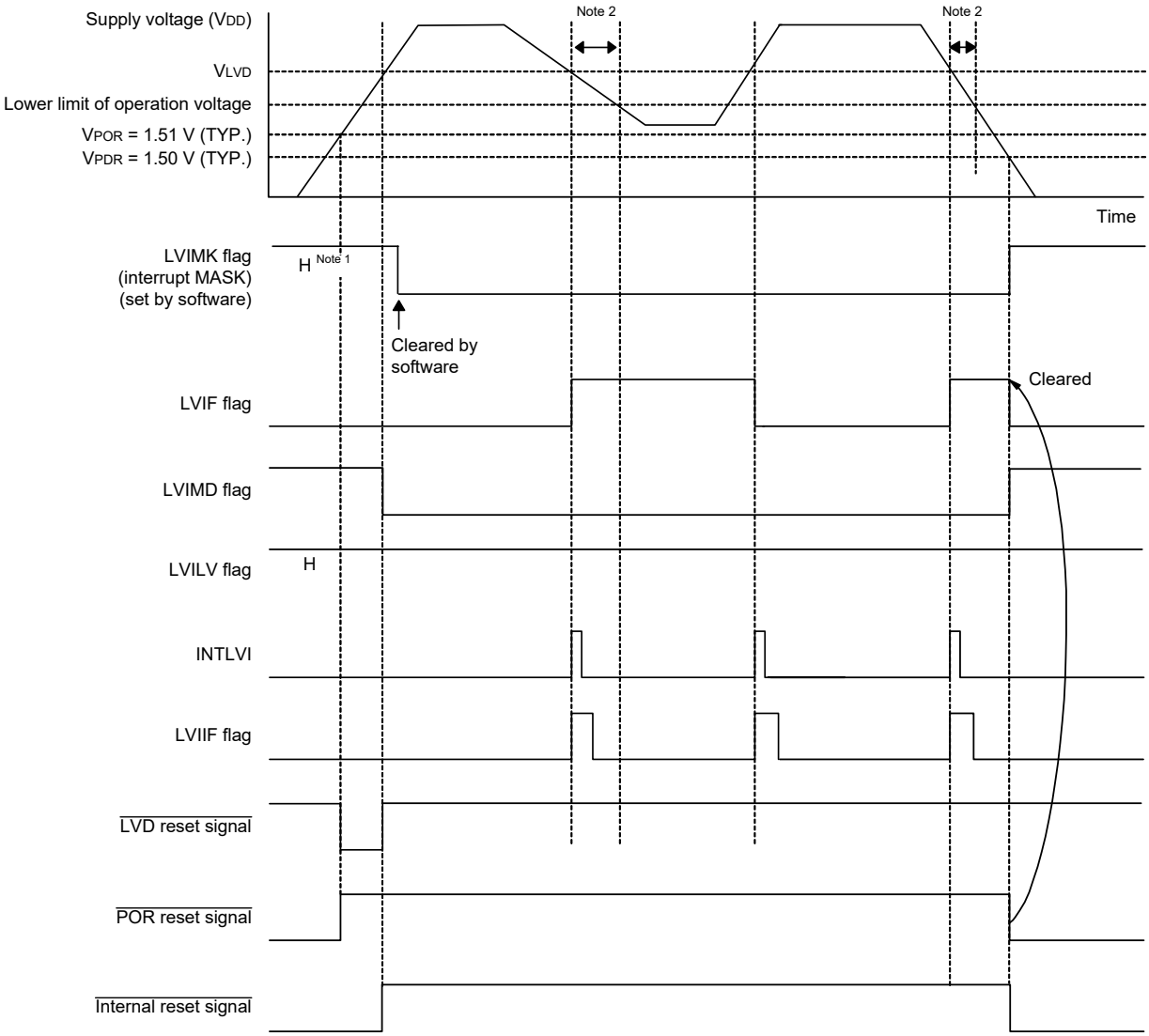

Note 1. The LVIMK flag is set to “1” by reset signal generation.

Note 2. When the voltage falls, this LSI should be placed in the STOP mode, or placed in the reset state by controlling the externally input reset signal, before the voltage falls below the operating voltage range defined in **37.4** or **38.4AC characteristics**. When restarting the operation, make sure that the operation voltage has returned within the range of operation.

Remark V_{POR}: POR power supply rise detection voltage
V_{PDR}: POR power supply fall detection voltage

29.4.3 When used as interrupt and reset mode

Specify the operation mode (the interrupt & reset (LVIMDS1, LVIMDS0 = 1, 0)) and the detection voltage (V_{LVDH}, V_{LVDL}) by using the option byte 000C1H.

The operation is started in the following initial setting state when the interrupt & reset mode is set.

- Bit 7 (LVISEN) of the voltage detection register (LVIM) is set to 0 (disable rewriting of voltage detection level register (LVIS))
- The initial value of the voltage detection level select register (LVIS) is set to 00H.
  Bit 7 (LVIMD) is 0 (interrupt mode).
  Bit 0 (LVILV) is 0 (high-voltage detection level: V_{LVDH}).

• Operation in LVD interrupt & reset mode

In the interrupt & reset mode (option byte LVIMDS1, LVIMDS0 = 1, 0), the state of an internal reset by LVD is retained until the supply voltage (V_{DD}) exceeds the high-voltage detection level (V_{LVDH}) after power is supplied. The internal reset is released when the supply voltage (V_{DD}) exceeds the high-voltage detection level (V_{LVDH}). An interrupt request signal by LVD (INTLVI) is generated and arbitrary save processing is performed when the supply voltage (V_{DD}) falls below the high-voltage detection level (V_{LVDH}). After that, an internal reset by LVD is generated when the supply voltage (V_{DD}) falls below the low-voltage detection level (V_{LVDL}). After INTLVI is generated, an interrupt request signal is not generated even if the supply voltage becomes equal to or higher than the high-voltage detection voltage (V_{LVDH}) without falling below the low-voltage detection voltage (V_{LVDL}). To use the LVD reset & interrupt mode, perform the processing according to **Figure 29 - 10 Setting Procedure for Operating Voltage Check and Reset** and **Figure 29 - 11 Setting Procedure for Initial Setting of Interrupt and Reset Mode**.

Figures 29 - 8 and 29 - 9 show the timing of the internal reset signal and interrupt signal generated in the LVD interrupt & reset mode.

Figure 29 - 8 Timing of Voltage Detector Reset Signal and Interrupt Signal Generation (Option Byte LVIMDS1, LVIMDS0 = 1, 0) (1/2)

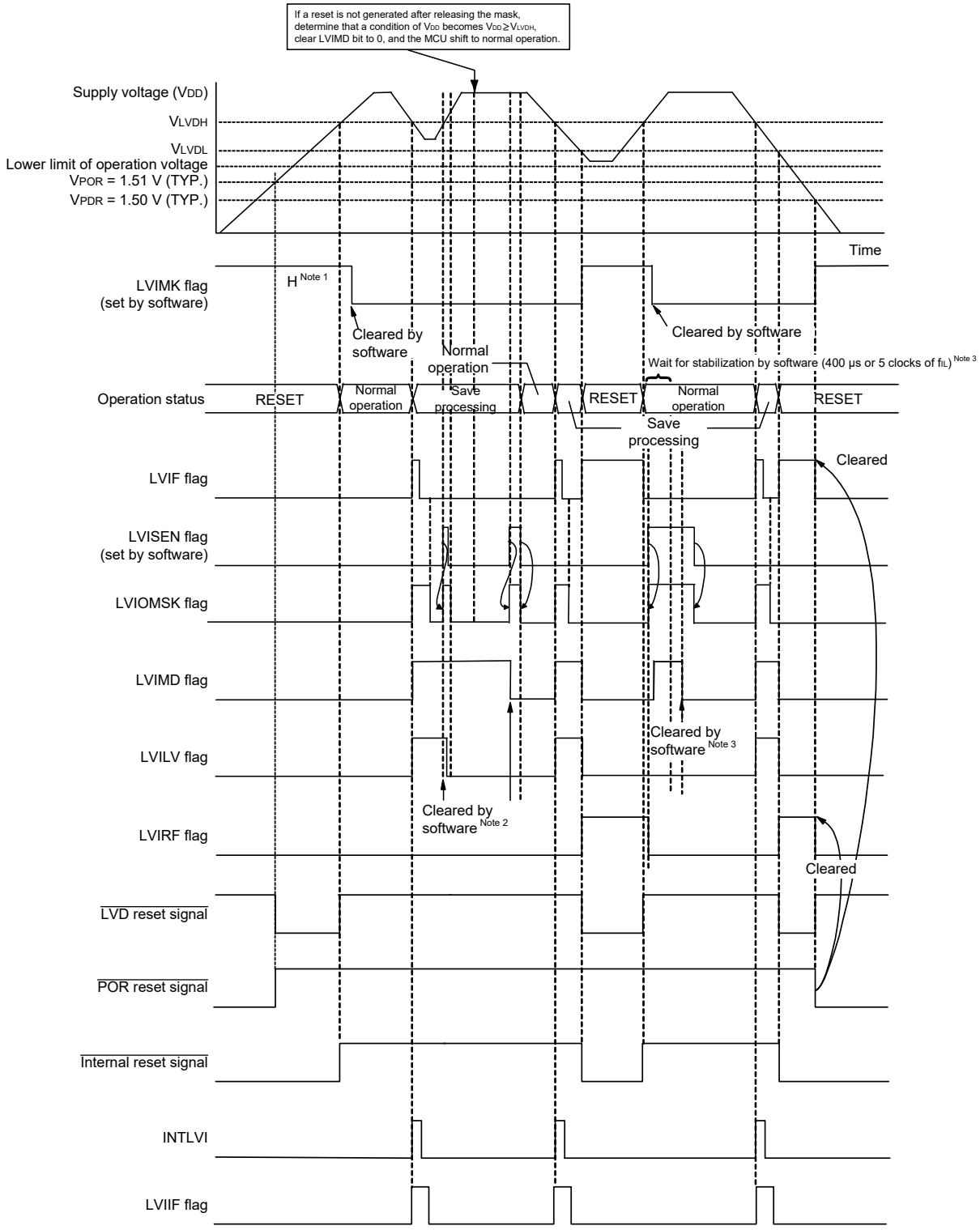

(**Notes** and **Remark** are listed on the next page.)

Note 1. The LVIMK flag is set to “1” by reset signal generation.

Note 2. After an interrupt is generated, perform the processing according to Figure 29 - 10 Setting Procedure for Operating Voltage Check and Reset in interrupt and reset mode.

Note 3. After a reset is released, perform the processing according to Figure 29 - 11 Setting Procedure for Initial Setting of Interrupt and Reset Mode in interrupt and reset mode.

Remark V_{POR}: POR power supply rise detection voltage
V_{POR}: POR power supply fall detection voltage

Figure 29 - 9 Timing of Voltage Detector Reset Signal and Interrupt Signal Generation (Option Byte LVIMDS1, LVIMDS0 = 1, 0) (2/2)

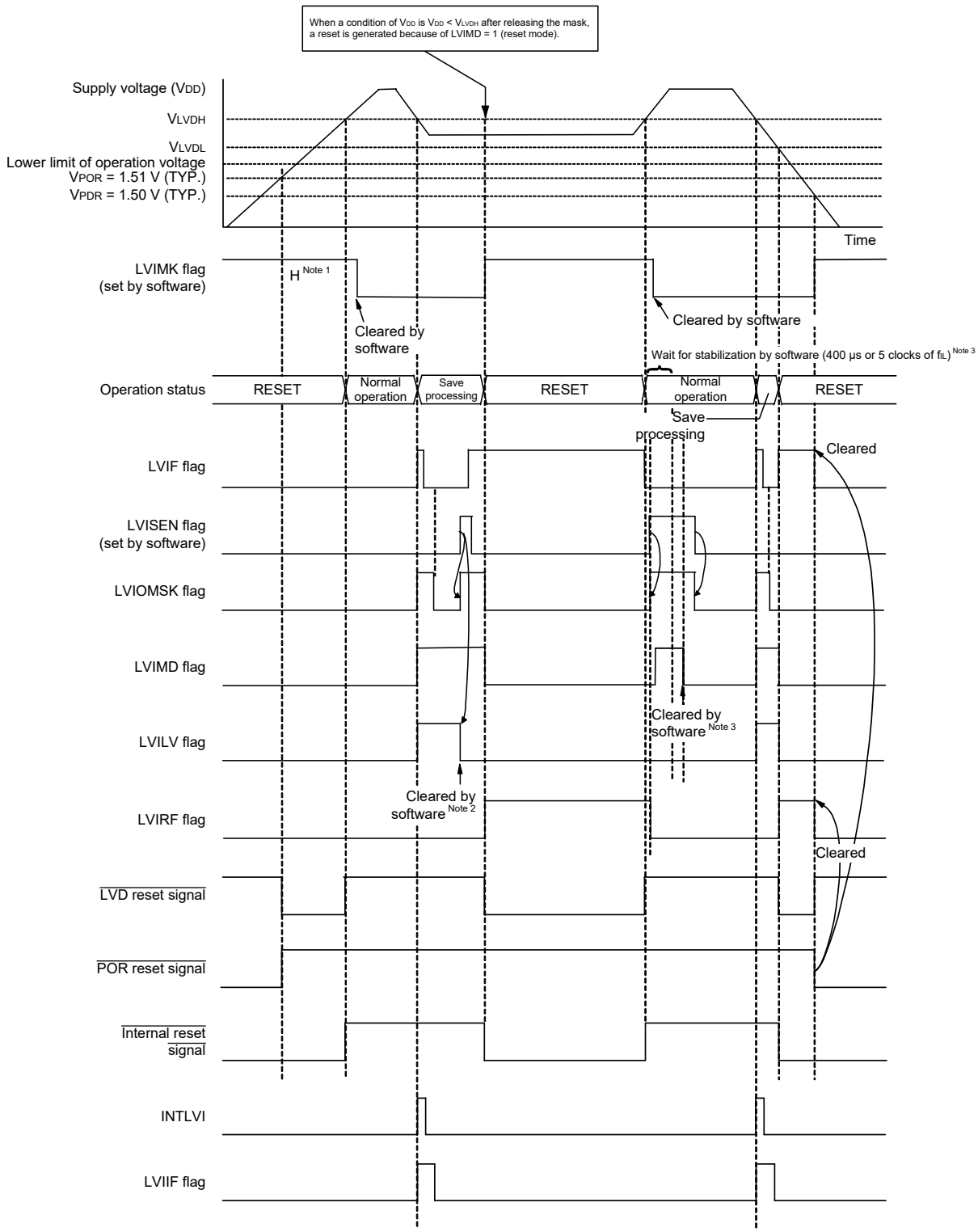

(**Notes** and **Remark** are listed on the next page.)

Note 1. The LVIMK flag is set to “1” by reset signal generation.

Note 2. After an interrupt is generated, perform the processing according to Figure 29 - 10 Setting Procedure for Operating Voltage Check and Reset in interrupt and reset mode.

Note 3. After a reset is released, perform the processing according to Figure 29 - 11 Setting Procedure for Initial Setting of Interrupt and Reset Mode in interrupt and reset mode.

Remark V_{POR}: POR power supply rise detection voltage
V_{PDR}: POR power supply fall detection voltage

Figure 29 - 10 Setting Procedure for Operating Voltage Check and Reset

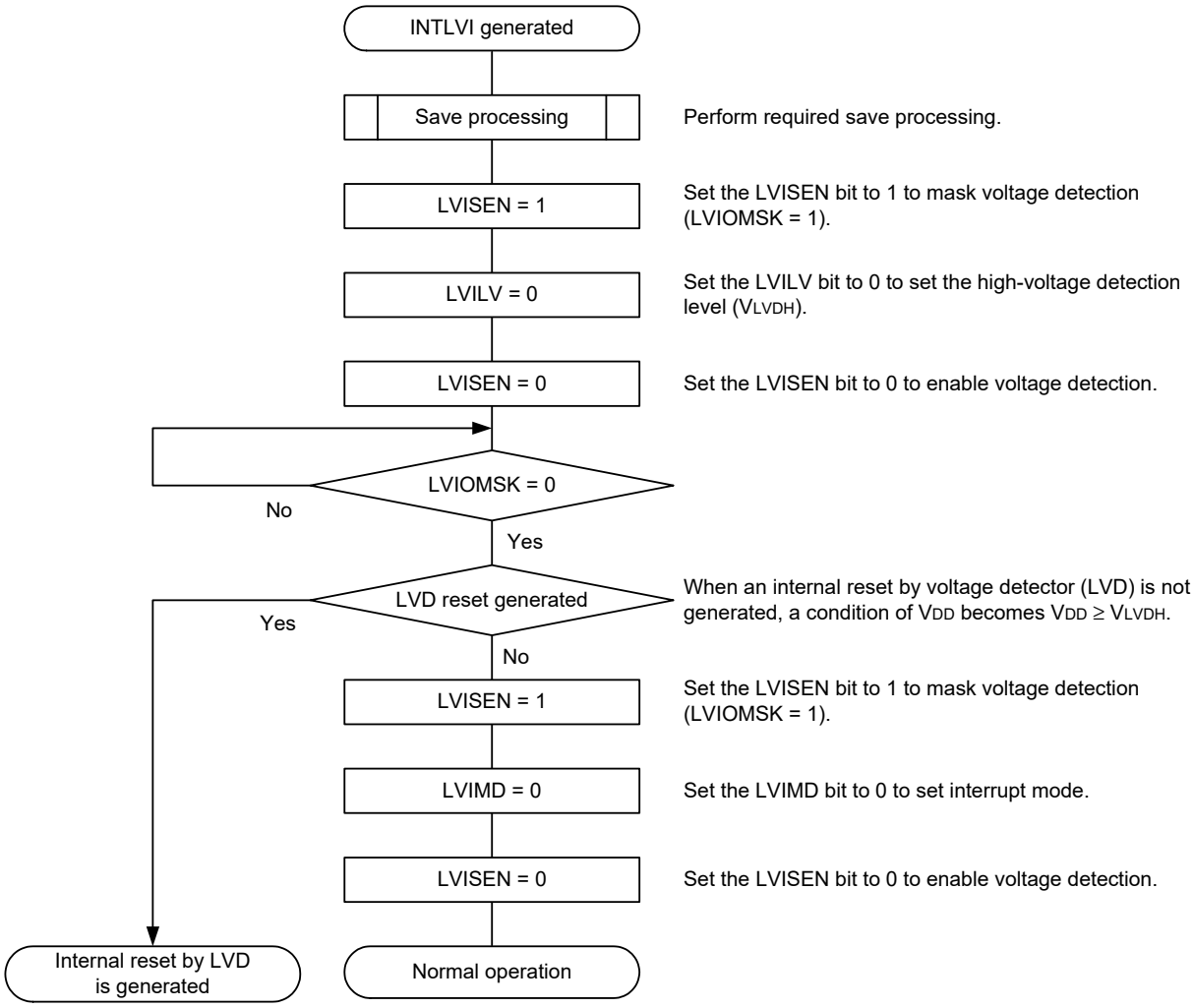

When setting an interrupt and reset mode (LVIMDS1, LVIMDS0 = 1, 0), voltage detection stabilization wait time for 400 μs or 5 clocks of f_{IL} is necessary after LVD reset is released (LVIRF = 1). After waiting until voltage detection stabilizes, (0) clear the LVIMD bit for initialization. While voltage detection stabilization wait time is being counted and when the LVIMD bit is rewritten, set LVISEN to 1 to mask a reset or interrupt generation by LVD.

Figure 29 - 11 shows the procedure for Setting Procedure for Initial Setting of Interrupt and Reset Mode.

Figure 29 - 11 Setting Procedure for Initial Setting of Interrupt and Reset Mode

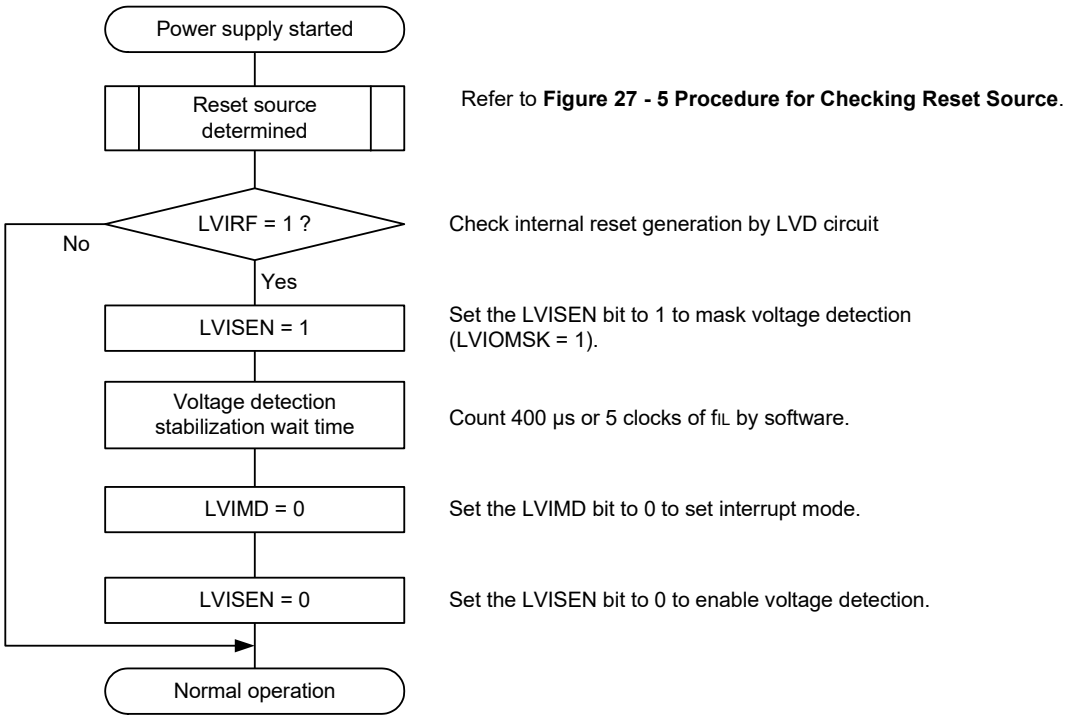

Remark f_{IL}: Low-speed on-chip oscillator clock frequency

29.5 Cautions for Voltage Detector

(1) Voltage fluctuation when power is supplied

In a system where the supply voltage (V_{DD}) fluctuates for a certain period in the vicinity of the LVD detection voltage, the system may be repeatedly reset and released from the reset status. In this case, the time from release of reset to the start of the operation of the microcontroller can be arbitrarily set by taking the following action.

<Action>

After releasing the reset signal, wait for the supply voltage fluctuation period of each system by means of a software counter that uses a timer, and then initialize the ports.

Figure 29 - 12 Example of Software Processing If Supply Voltage Fluctuation is 50 ms or Less in Vicinity of LVD Detection Voltage

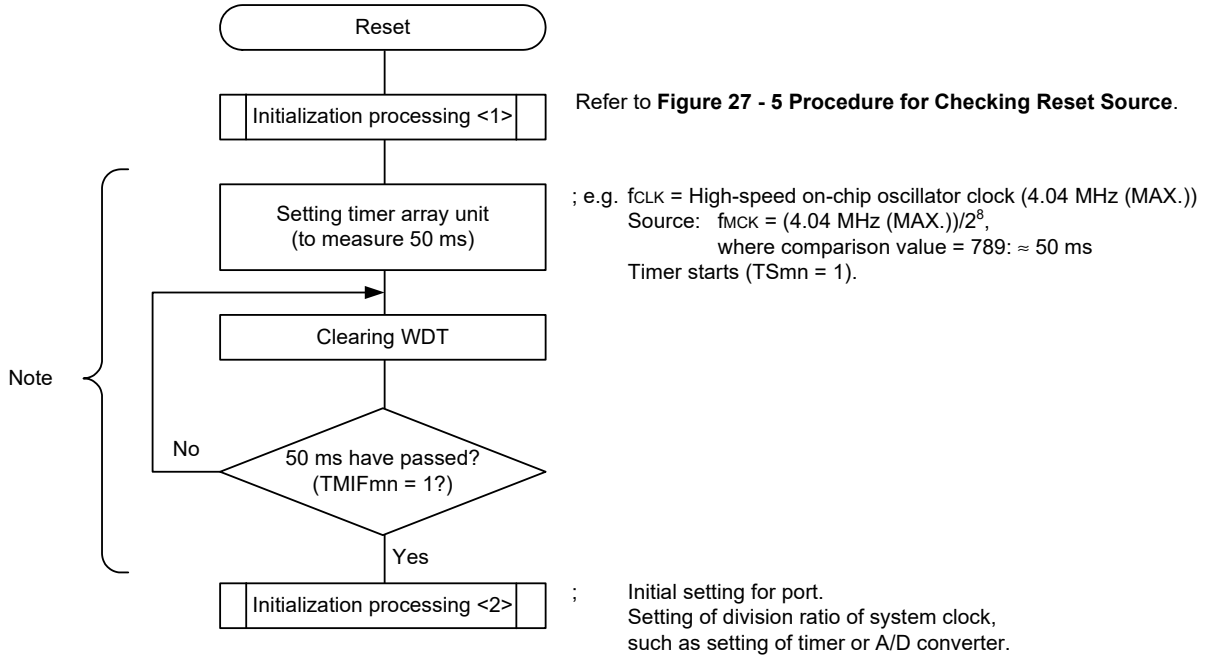

Note If reset is generated again during this period, initialization processing <2> is not started.

Remark m = 0, 1
n = 0 to 3

(4) Delay from the time LVD reset source is generated until the time LVD reset has been generated or released

There is some delay from the time supply voltage (V_{DD}) < LVD detection voltage (V_{LVD}) until the time LVD reset has been generated.

In the same way, there is also some delay from the time LVD detection voltage (V_{LVD}) ≤ supply voltage (V_{DD}) until the time LVD reset has been released (see **Figure 29 - 13**).

Figure 29 - 13 Delay from the time LVD reset source is generated until the time LVD reset has been generated or released

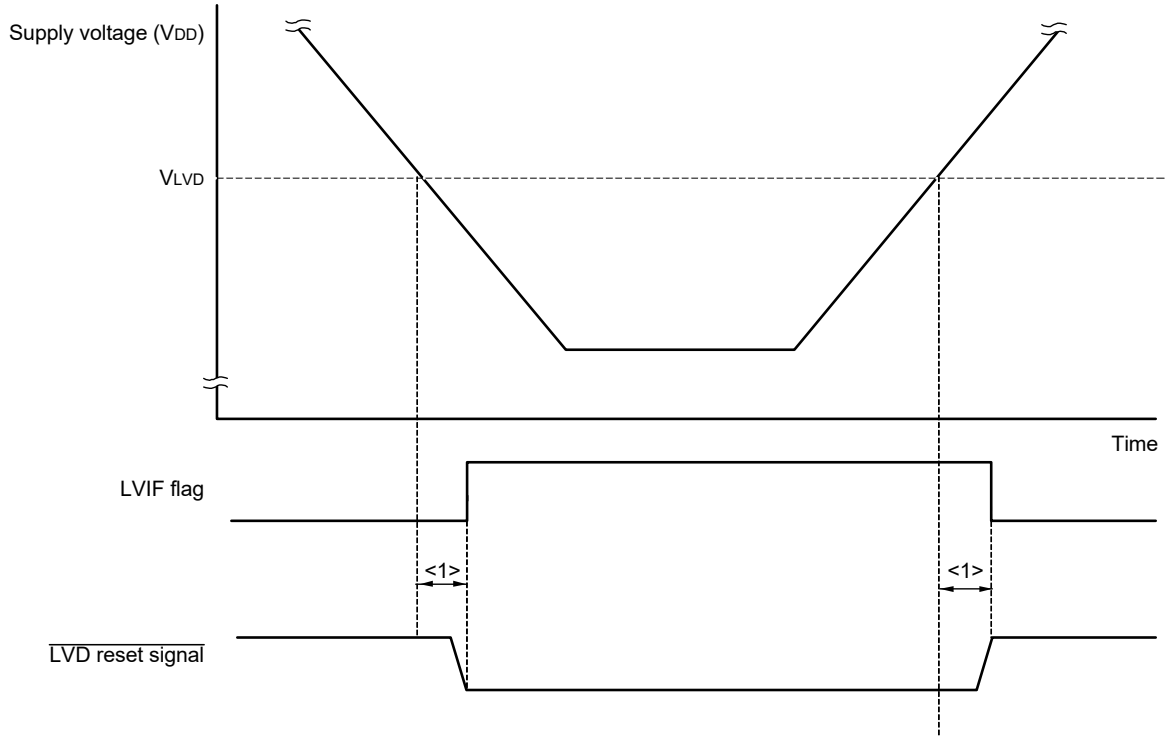

<1>: Detection delay (300 μs (MAX.))

(3) Power on when LVD is off

Use the external rest input via the $\overline{\text{RESET}}$ pin when the LVD is off.

For an external reset, input a low level for 10 μs or more to the $\overline{\text{RESET}}$ pin. To perform an external reset upon power application, input a low level to the $\overline{\text{RESET}}$ pin, turn power on, continue to input a low level to the pin for 10 μs or more within the operating voltage range shown in **37.4** or **38.4 AC Characteristics**, and then input a high level to the pin.

(4) Operating voltage fall when LVD is off or LVD interrupt mode is selected

When the operating voltage falls with the LVD is off or with the LVD interrupt mode is selected, this LSI should be placed in the STOP mode, or placed in the reset state by controlling the externally input reset signal, before the voltage falls below the operating voltage range defined in **37.4** or **38.4 AC Characteristics**. When restarting the operation, make sure that the operation voltage has returned within the range of operation.

CHAPTER 30 SAFETY FUNCTIONS

30.1 Overview of Safety Functions

<R> The following safety functions are provided in the RL78/G1F to comply with the IEC60730 safety standards. These functions enable the microcontroller to self-diagnose abnormalities and stop operating if an abnormality is detected.

(1) Flash memory CRC operation function (high-speed CRC, general-purpose CRC)
This detects data errors in the flash memory by performing CRC operations.
Two CRC functions are provided in the RL78/G1F that can be used according to the application or purpose of use.
- High-speed CRC: The CPU can be stopped and a high-speed check executed on its entire code flash memory area during the initialization routine.
- General CRC: This can be used for checking various data in addition to the code flash memory area while the CPU is running.

(2) RAM parity error detection function
This detects parity errors when the RAM is read as data.

(3) RAM guard function
This prevents RAM data from being rewritten when the CPU freezes.

(4) SFR guard function
This prevents SFRs from being rewritten when the CPU freezes.

(5) Invalid memory access detection function
This detects illegal accesses to invalid memory areas (such as areas where no memory is allocated and areas to which access is restricted).

(6) Frequency detection function
This uses the timer array unit to perform a self-check of the CPU/peripheral hardware clock frequency.

(7) A/D test function
This is used to perform a self-check of A/D converter by performing A/D conversion on the positive internal reference voltage, negative reference voltage, analog input channel (ANI), temperature sensor output, and internal reference voltage output.

(8) Digital output signal level detection function for I/O pins
When the I/O pins are output mode, the output level of the pin can be read.

Remark Refer to the IEC60730/60335 self-test library application notes (R01AN1062, R01AN1296) for the RL78 MCU Series, for more information on usage examples of the safety functions required to comply with the <R> IEC60730 safety standards.

30.2 Registers Used by Safety Functions

The safety functions use the following registers:

Register	Each Function of Safety Function
• Flash memory CRC control register (CRC0CTL) • Flash memory CRC operation result register (PGCRCL)	Flash memory CRC operation function (high-speed CRC)
• CRC input register (CRCIN) • CRC data register (CRCD)	CRC operation function (general-purpose CRC)
• RAM parity error control register (RPECTL)	RAM parity error detection function
• Invalid memory access detection control register (IAWCTL)	RAM guard function
	SFR guard function
	Invalid memory access detection function
• Timer I/O select register 0 (TIOS0)	Frequency detection function
• A/D test register (ADTES)	A/D test function
• Port mode select register (PMS)	Digital output signal level detection function for I/O pins

The content of each register is described in **30.3 Operation of Safety Functions**.

30.3 Operation of Safety Functions

30.3.1 Flash memory CRC operation function (high-speed CRC)

The IEC60730 standard mandates the checking of data in the flash memory, and recommends using CRC to do it. The high-speed CRC provided in the RL78/G1F can be used to check the entire code flash memory area during the initialization routine. The high-speed CRC can be executed only when the program is allocated on the RAM and in the HALT mode of the main system clock.

The high-speed CRC performs an operation by reading 32-bit data per clock from the flash memory while stopping the CPU. This function therefore can finish a check in a shorter time (for example, 512 μs@32 MHz with 64-KB flash memory).

The CRC generator polynomial used complies with “$X^{16} + X^{12} + X^5 + 1$” of CRC-16-CCITT.

The high-speed CRC operates in MSB first order from bit 31 to bit 0.

Caution **The CRC operation result might differ during on-chip debugging because the monitor program is allocated.**

Remark The operation result is different between the high-speed CRC and the general CRC, because the general CRC operates in LSB first order.

30.3.1.1 Flash memory CRC control register (CRC0CTL)

This register is used to control the operation of the high-speed CRC ALU, as well as to specify the operation range.
The CRC0CTL register can be set by a 1-bit or 8-bit memory manipulation instruction.
Reset signal generation clears this register to 00H.

Figure 30 - 1 Format of Flash memory CRC control register (CRC0CTL)

Address: F02F0H After reset:00H R/W

Symbol	<7>	6	5	4	3	2	1	0
CRC0CTL	CRC0EN	0	FEA5	FEA4	FEA3	FEA2	FEA1	FEA0

CRC0EN	Control of high-speed CRC ALU operation
0	Stop the operation.
1	Start the operation according to HALT instruction execution.

FEA5	FEA4	FEA3	FEA2	FEA1	FEA0	High-speed CRC operation range
0	0	0	0	0	0	00000H to 03FFBH (16 K - 4 bytes)
0	0	0	0	0	1	00000H to 07FFBH (32 K - 4 bytes)
0	0	0	0	1	0	00000H to 0BFFBH (48K - 4 bytes)
0	0	0	0	1	1	00000H to 0FFFBH (64K - 4 bytes)
Other than the above						Setting prohibited

Remark Input the expected CRC operation result value to be used for comparison in the lowest 4 bytes of the flash memory. Note that the operation range will thereby be reduced by 4 bytes.

30.3.1.2 Flash memory CRC operation result register (PGCRCL)

This register is used to store the high-speed CRC operation results.

The PGCRCL register can be set by a 16-bit memory manipulation instruction.

Reset signal generation clears this register to 0000H.

Figure 30 - 2 Format of Flash memory CRC operation result register (PGCRCL)

Address: F02F2H After reset: 0000H R/W

Symbol	15	14	13	12	11	10	9	8
PGCRCL	PGCRC15	PGCRC14	PGCRC13	PGCRC12	PGCRC11	PGCRC10	PGCRC9	PGCRC8

7	6	5	4	3	2	1	0
PGCRC7	PGCRC6	PGCRC5	PGCRC4	PGCRC3	PGCRC2	PGCRC1	PGCRC0

PGCRC15 to 0	High-speed CRC operation results
0000H to FFFFH	Store the high-speed CRC operation results.

Caution The PGCRCL register can only be written if CRC0EN (bit 7 of the CRC0CTL register) = 1.

Figure 27 - 3 shows the Flowchart of Flash Memory CRC Operation Function (High-speed CRC).

<Operation flow>

Figure 30 - 3 Flowchart of Flash Memory CRC Operation Function (High-speed CRC)

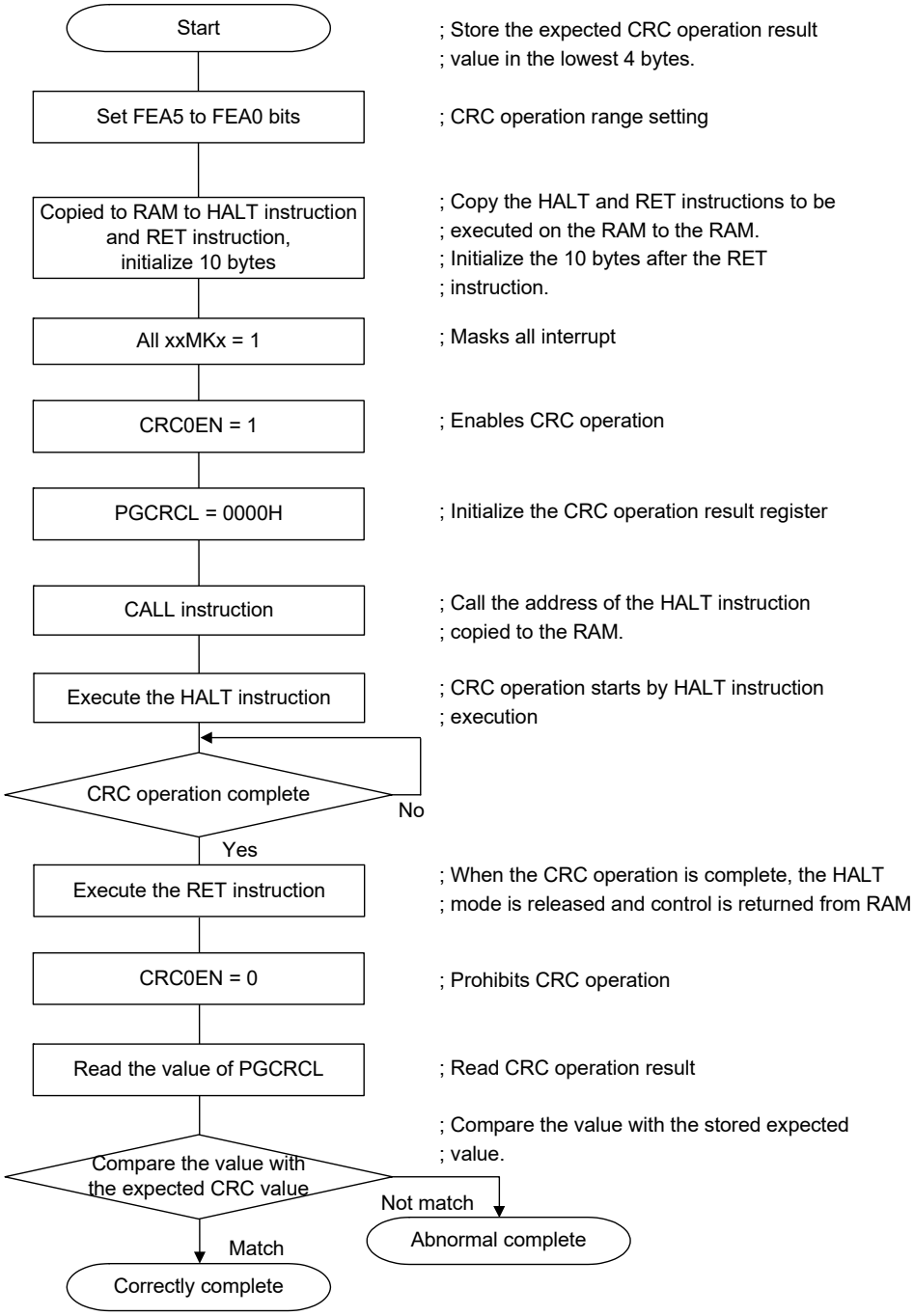

Caution 1. The CRC operation is executed only on the code flash.
Caution 2. Store the expected CRC operation value in the area below the operation range in the code flash.
Caution 3. The CRC operation is enabled by executing the HALT instruction in the RAM area.
Be sure to execute the HALT instruction in RAM area.

The expected CRC operation value can be calculated by using the integrated development environment CubeSuite+ development environment. Refer to the CubeSuite+ integrated development environment user's manual for details.

30.3.2 CRC operation function (general-purpose CRC)

<R> In the RL78/G1F, a general CRC operation can be executed as a peripheral function while the CPU is operating. The general CRC can be used for checking various data in addition to the code flash memory area. The data to be checked can be specified by using software (a user-created program). In HALT mode, the CRC operation function can be used only during DTC transfer.

The general CRC operation can be executed in the main system clock operation mode as well as the subsystem clock operation mode.

The CRC generator polynomial used is “$X^{16} + X^{12} + X^5 + 1$” of CRC-16-CCITT. The data to be input is inverted in bit order and then calculated to allow for LSB-first communication. For example, if the data 12345678H is sent from the LSB, values are written to the CRCIN register in the order of 78H, 56H, 34H, and 12H, enabling a value of 08F6H to be obtained from the CRCD register. This is the result obtained by executing a CRC operation on the bit rows shown below, which consist of the data 12345678H inverted in bit order.

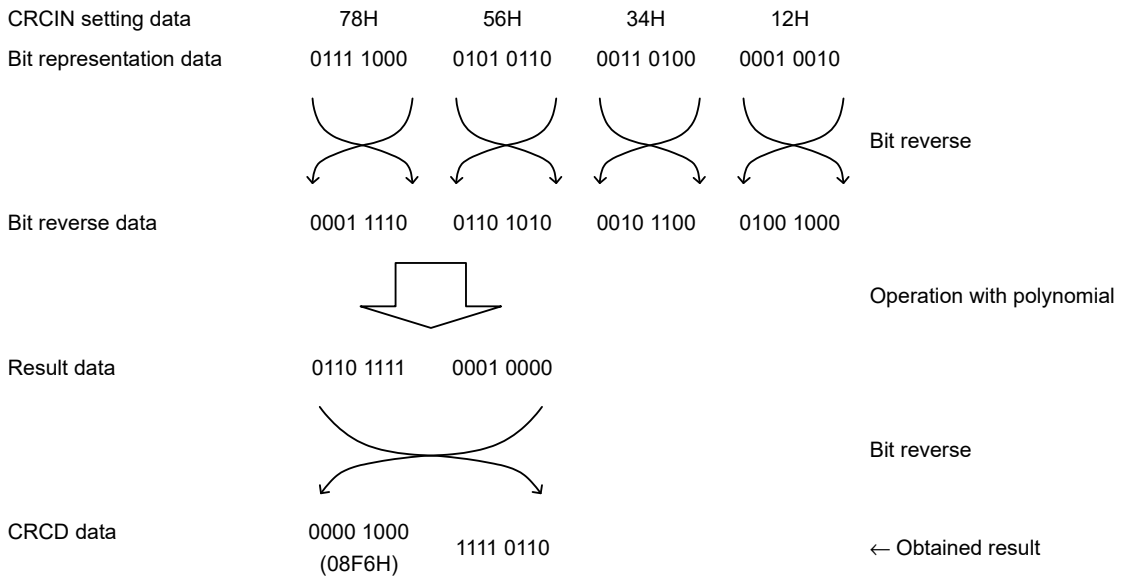

Caution Because the debugger rewrites the software break setting line to a break instruction during program execution, the CRC operation result differs if a software break is set in the CRC operation target area.

30.3.2.1 CRC input register (CRCIN)

CRCIN register is an 8-bit register that is used to set the CRC operation data of general-purpose CRC.

The possible setting range is 00H to FFH.

The CRCIN register can be set by an 8-bit memory manipulation instruction.

Reset signal generation clears this register to 00H.

Figure 30 - 4 Format of CRC input register (CRCIN)

Address:FFFACH After reset:00H R/W

Symbol	7	6	5	4	3	2	1	0
CRCIN								

Bits 7 to 0	Function
00H to FFH	Data input.

30.3.2.2 CRC data register (CRCD)

This register is used to store the general-purpose CRC operation result.

The possible setting range is 0000H to FFFFH.

After 1 clock of CPU/peripheral hardware clock (f_{CLK}) has elapsed from the time CRCIN register is written, the CRC operation result is stored to the CRCD register.

The CRCD register can be set by a 16-bit memory manipulation instruction.

Reset signal generation clears this register to 0000H.

Figure 30 - 5 Format of CRC data register (CRCD)

Address: F02FAH After reset: 0000H R/W

Symbol	15	14	13	12	11	10	9	8	7	6	5	4	3	2	1	0
CRCD																

Caution 1. Read the value written to CRCD register before writing to CRCIN register.

Caution 2. If writing and storing operation result to CRCD register conflict, the writing is ignored.

<Operation flow>

Figure 30 - 6 CRC Operation Function (General-Purpose CRC)

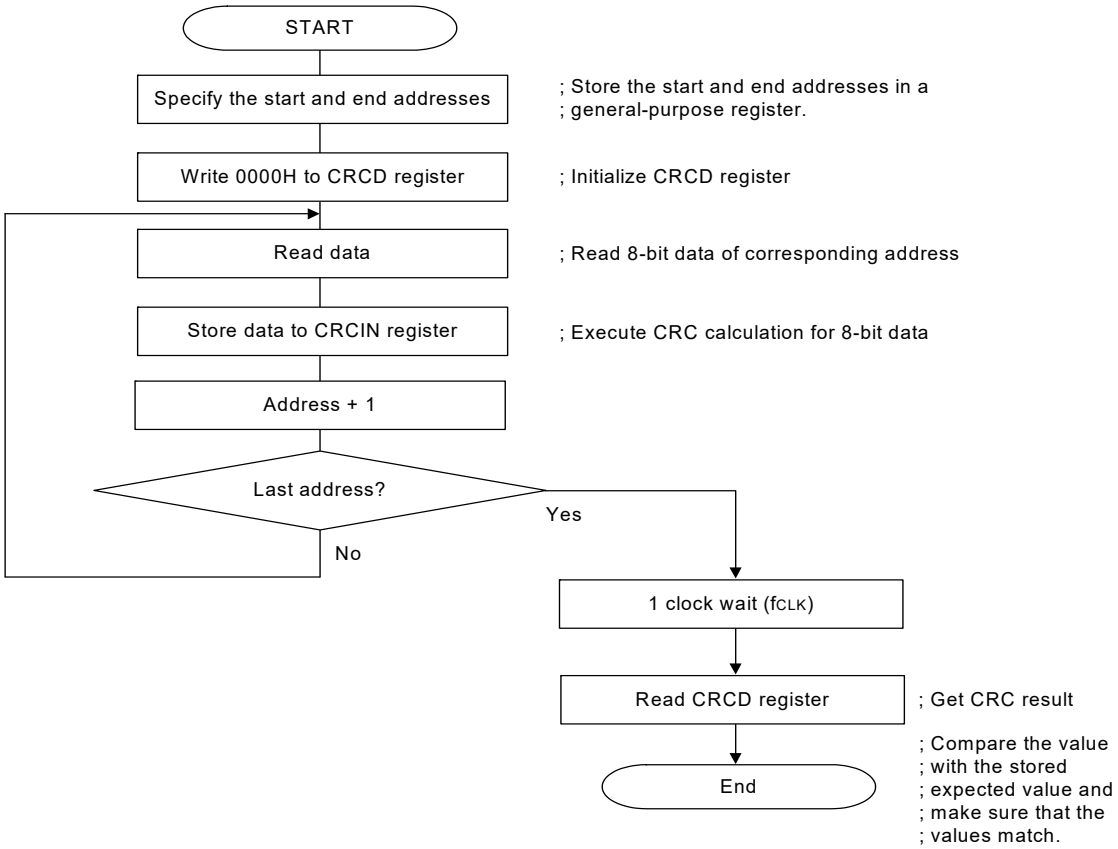

30.3.3 RAM parity error detection function

The IEC60730 standard mandates the checking of RAM data. A single-bit parity bit is therefore added to all 8-bit data in the RL78/G1F's RAM. By using this RAM parity error detection function, the parity bit is appended when data is written, and the parity is checked when the data is read. This function can also be used to trigger a reset when a parity error occurs.

30.3.3.1 RAM parity error control register (RPECTL)

This register is used to control parity error generation check bit and reset generation due to parity errors.
The RPECTL register can be set by a 1-bit or 8-bit memory manipulation instruction.
Reset signal generation clears this register to 00H.

Figure 30 - 7 Format of RAM parity error control register (RPECTL)

Address: F00F5H After reset: 00H R/W

Symbol	<7>	6	5	4	3	2	1	<0>
RPECTL	RPERDIS	0	0	0	0	0	0	RPEF

RPERDIS	Parity error reset mask flag
0	Enable parity error resets.
1	Disable parity error resets.

RPEF	Parity error status flag
0	No parity error has occurred.
1	A parity error has occurred.

Caution The parity bit is appended when data is written, and the parity is checked when the data is read. Therefore, while RAM parity error resets are enabled (RPERDIS = 0), be sure to initialize RAM areas where data access is to proceed before reading data.
The RL78's CPU executes look-ahead due to the pipeline operation, the CPU might read an uninitialized RAM area that is allocated beyond the RAM used, which causes a RAM parity error. Therefore, while RAM parity error resets are enabled (RPERDIS = 0), be sure to initialize the RAM area + 10 bytes when instructions are fetched from RAM areas.

Remark 1. The parity error reset is enabled by default (RPERDIS = 0).
Remark 2. Even if the parity error reset is disabled (RPERDIS = 1), the RPEF flag will be set (1) if a parity error occurs. If the parity error reset is enabled (RPERDIS = 0) while RPEF = 1, a parity error reset occurs when RPERDIS is cleared (0).
Remark 3. The RPECTL flag in the RESF register is set (1) by RAM parity errors and cleared (0) by writing 0 to it or by any reset source. When RPEF = 1, the value is retained even if RAM for which no parity error has occurred is read.
Remark 4. General-purpose registers are not included in the range of RAM parity error detection.

Figure 30 - 8 RAM Parity Error Check Flow

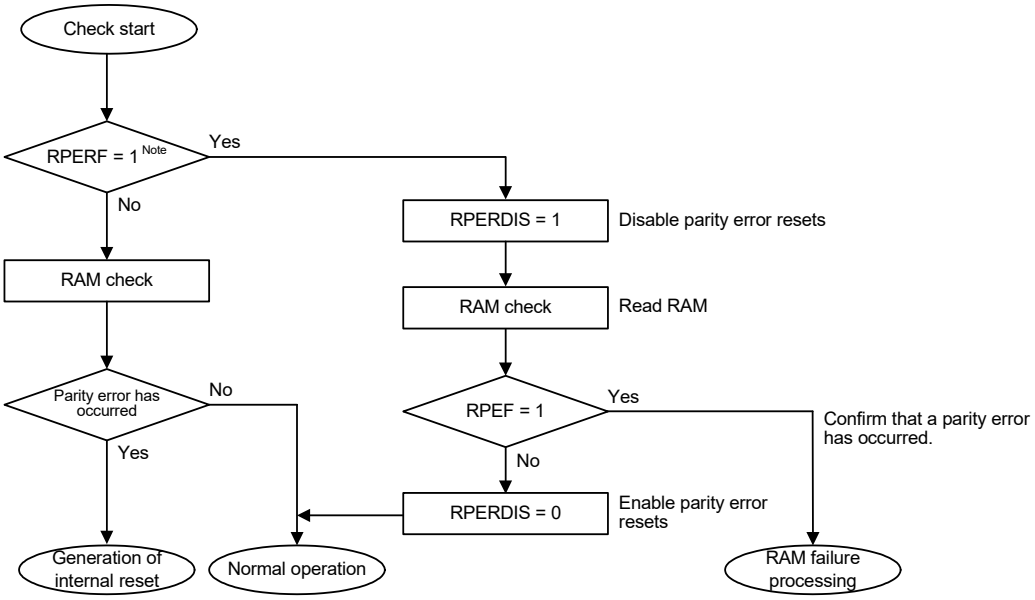

Note See **CHAPTER 24 RESET FUNCTION** for details on how to confirm internal resets due to RAM parity errors.

30.3.4 RAM guard function

<R> This RAM guard function is used to protect data in the specified memory space.
If the RAM guard function is specified, writing to the specified RAM space is disabled, but reading from the space can be carried out as usual.

30.3.4.1 Invalid memory access detection control register (IAWCTL)

This register is used to control the detection of invalid memory access and RAM/SFR guard function.
GRAM1 and GRAM0 bits are used in RAM guard function.
The IAWCTL register can be set by an 8-bit memory manipulation instruction.
Reset signal generation clears this register to 00H.

Figure 30 - 9 Format of Invalid memory access detection control register (IAWCTL)

Address: F0078H After reset: 00H R/W

Symbol	7	6	5	4	3	2	1	0
IAWCTL	IAWEN	0	GRAM1	GRAM0	0	GPORT	GINT	GCSC

GRAM1	GRAM0	RAM guard space Note
0	0	Disabled. RAM can be written to.
0	1	The 128 bytes starting at the start RAM address
1	0	The 256 bytes starting at the start RAM address
1	1	The 512 bytes starting at the start RAM address

Note The RAM start address differs depending on the size of the RAM provided with the product.

30.3.5 SFR guard function

<R> This SFR guard function is used to protect data in the control registers used by the port function, interrupt function, clock control function, voltage detection function, and RAM parity error detection function.
If the SFR guard function is specified, writing to the specified SFRs is disabled, but reading from the SFRs can be carried out as usual.

30.3.5.1 Invalid memory access detection control register (IAWCTL)

This register is used to control the detection of invalid memory access and RAM/SFR guard function.
GPORT, GINT and GCSC bits are used in SFR guard function.
The IAWCTL register can be set by an 8-bit memory manipulation instruction.
Reset signal generation clears this register to 00H.

Figure 30 - 10 Format of Invalid memory access detection control register (IAWCTL)

Address: F0078H After reset: 00H R/W

Symbol	7	6	5	4	3	2	1	0
IAWCTL	IAWEN	0	GRAM1	GRAM0	0	GPORT	GINT	GCSC

GPORT	Control registers of port function guard
0	Disabled. Control registers of port function can be read or written to.
1	Enabled. Writing to control registers of port function is disabled. Reading is enabled. [Guarded SFR] PMxx, PUxx, PIMxx, POMxx, PMCxx, PIORx Note

GINT	Registers of interrupt function guard
0	Disabled. Registers of interrupt function can be read or written to.
1	Enabled. Writing to registers of interrupt function is disabled. Reading is enabled. [Guarded SFR] IFxx, MKxx, PRxx, EGPx, EGNx

GCSC	Control registers of clock control function, voltage detector, and RAM parity error detection function guard
0	Disabled. Control registers of clock control function, voltage detector and RAM parity error detection function can be read or written to.
1	Enabled. Writing to control registers of clock control function, voltage detector and RAM parity error detection function is disabled. Reading is enabled. [Guarded SFR] CMC, CSC, OSTS, CKC, PERx, OSMC, LVIM, LVIS, RPECTL

Note Pxx (Port register) is not guarded.

30.3.6 Invalid memory access detection function

The IEC60730 standard mandates checking that the CPU and interrupts are operating correctly.

The illegal memory access detection function triggers a reset if a memory space specified as access-prohibited is accessed.

The illegal memory access detection function applies to the areas indicated by NG in Figure 27 - 11.

Figure 30 - 11 Invalid Access Detection Area

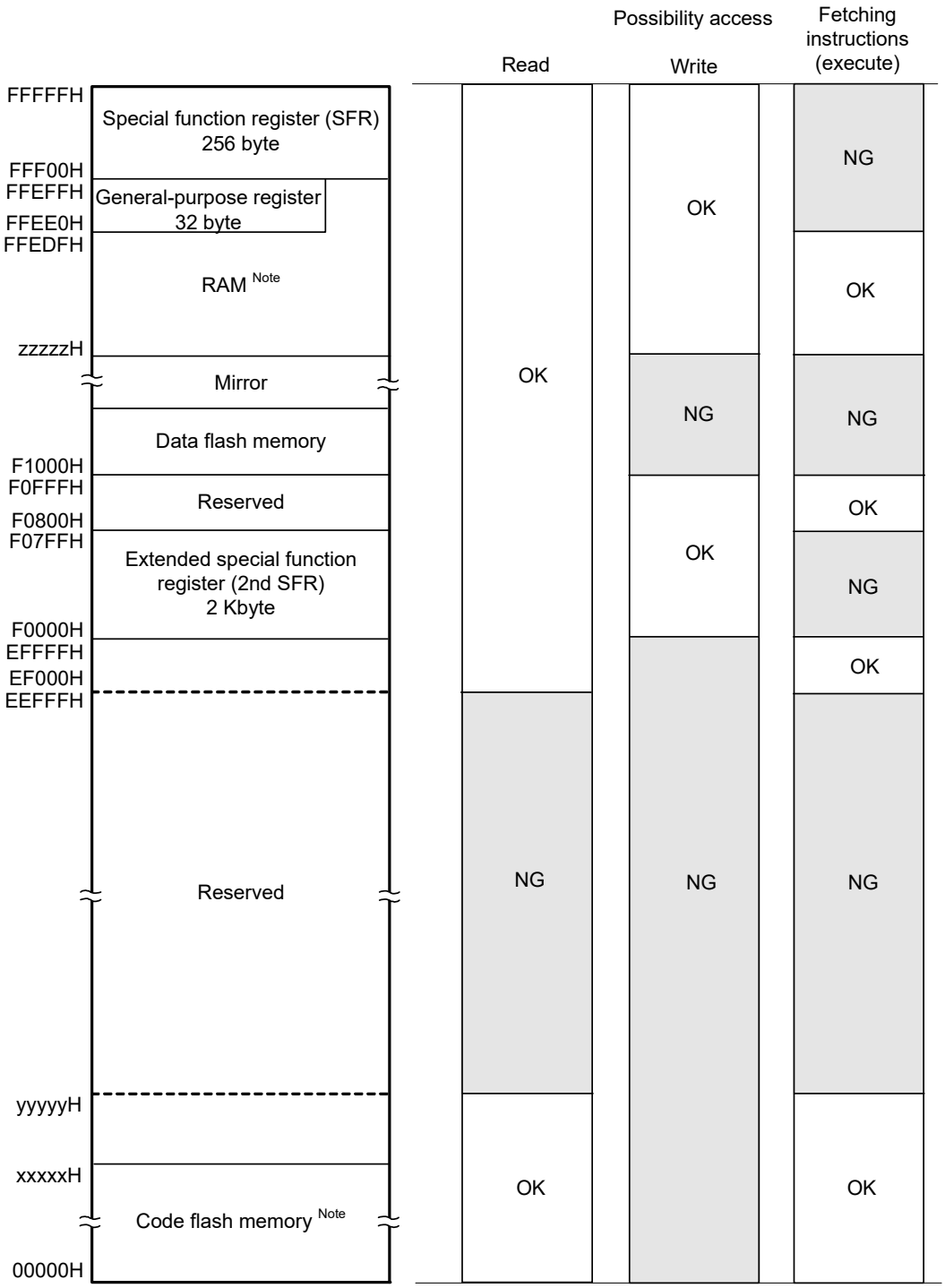

(**Note** ia listed on the next page.)

Note The code flash memory, RAM, and lowest detection address of each product are as follows.

Products	Code Flash Memory (00000H to xxxxxH)	RAM (zzzzzH to FFEFFH)	Lowest Detection Address (yyyyyH) when Reading/Fetching (Executing) Instructions
R5F11BxC (x = 7, B, C, G ,L)	32768 × 8 bits (00000H to 07FFFH)	5632 × 8 bits (FE900H to FFEFFH)	08000H
R5F11BxE (x = 7, B, C, G ,L)	49152 × 8 bits (00000H to 0BFFFH)	5632 × 8 bits (FE900H to FFEFFH)	08000H

30.3.6.1 Invalid memory access detection control register (IAWCTL)

This register is used to control the detection of invalid memory access and RAM/SFR guard function.

IAWEN bit is used in invalid memory access detection function.

The IAWCTL register can be set by an 8-bit memory manipulation instruction.

Reset signal generation clears this register to 00H.

Figure 30 - 12 Format of Invalid memory access detection control register (IAWCTL)

Address: F0078H After reset: 00H R/W

Symbol	7	6	5	4	3	2	1	0
IAWCTL	IAWEN Note	0	GRAM1	GRAM0	0	GPORT	GINT	GCSC

IAWEN Note	Control of invalid memory access detection
0	Disable the detection of invalid memory access.
1	Enable the detection of invalid memory access.

Note Only writing 1 to the IAWEN bit is enabled, not writing 0 to it after setting it to 1.

Remark By specifying WDTON = 1 for the option byte (watchdog timer operation enable), the invalid memory access detection function is enabled even if IAWEN = 0.

30.3.7 Frequency detection function

The IEC60730 standard mandates checking that the oscillation frequency is correct.
By using the CPU/peripheral hardware clock frequency (f_{CLK}) and measuring the pulse width of the input signal to channel 1 of the timer array unit 0 (TAU0), whether the proportional relationship between the two clock frequencies is correct can be determined.
Note that, however, if one or both clock operations are stopped, the proportional relationship between the clocks cannot be determined.

<Clocks to be compared>

<1> CPU/peripheral hardware clock frequency (f_{CLK}):
- High-speed on-chip oscillator clock (f_{IH})
- High-speed system clock (f_{MX})

<2> Input to channel 1 of the timer array unit 0
- Timer input to channel 1 (TI01)
- Low-speed on-chip oscillator clock (f_{IL}: 15 kHz (typ.))
- Subsystem clock (f_{SUB}) Note

Figure 30 - 13 Configuration of Frequency Detection Function

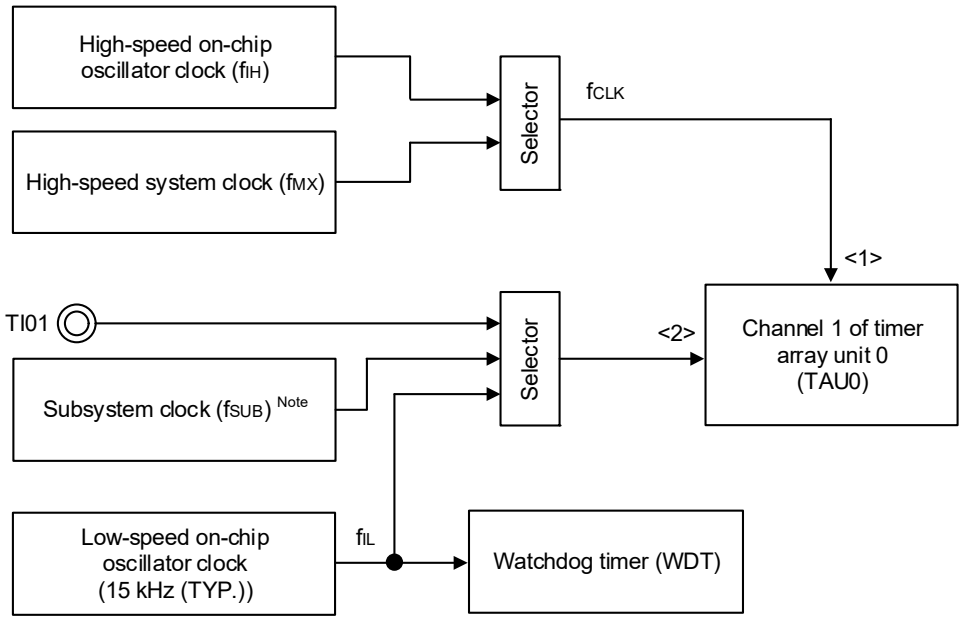

If pulse interval measurement results in an abnormal value, it can be concluded that the clock frequency is abnormal.
For how to execute pulse interval measurement, see **6.8.4 Operation as input pulse interval measurement**.

Note Can only be selected in the products incorporating the subsystem clock.

30.3.7.1 Timer I/O select register 0 (TIOS0)

The TIOS0 register is used to select the timer input of channels 0 and 1 and timer output of channel 2 of the timer array unit 0 (TAU0).

The TIOS0 register can be set by an 8-bit memory manipulation instruction.

Reset signal generation clears this register to 00H.

Figure 30 - 14 Format of Timer I/O select register 0 (TIOS0)

Address: F0074H After reset: 00H R/W

Symbol	7	6	5	4	3	2	1	0
TIOS0	TIS07	TIS06	TIS05	TIS04	TOS03	TIS02	TIS01	TIS00

TIS07	TIS06	TIS05	Selection of timer input used with channel 0
0	0	0	Input signal of timer input pin (TI00)
0	0	1	Timer RD output signal that does not pass through PWMOPA (TRDIOB0)
0	1	0	Timer RD output signal that does not pass through PWMOPA (TRDIOD0)
0	1	1	Timer RD output signal that does not pass through PWMOPA (TRDIOA1)
1	0	0	Timer RD output signal that does not pass through PWMOPA (TRDIOC1)
1	0	1	Timer RD output signal that does not pass through PWMOPA (TRDIOB1)
1	1	0	Timer RD output signal that does not pass through PWMOPA (TRDIOD1)
1	1	1	Timer RD output signal that does not pass through PWMOPA (TRDIOC0)

TIS04	Selection of timer input used with channel 0
0	Input signal specified by the TIS07 to TIS05 bits
1	Event input signal from ELC

TOS03	Enable/disable of TAU channel 2 output to P17 pin
0	Output enable
1	Output disabled (Fixed to L)

TIS02	TIS01	TIS00	Selection of timer input used with channel 1
0	0	0	Input signal of timer input pin (TI01)
0	0	1	Event input signal from ELC
0	1	0	Input signal of timer input pin (TI01)
0	1	1	
1	0	0	Low-speed on-chip oscillator clock (f_{IL})
1	0	1	Subsystem clock (f_{SUB})
Other than above			Setting prohibited

Note 1. Setting is prohibited for 24-pin products.

Note 2. Setting is prohibited for 24- and 32-pin products.

Caution 1. Be sure to clear bit 3 to 0 in 24-pin products.

Caution 2. At least $1/f_{MCK}$ + 10 ns is necessary as the high-level and low-level widths of the timer input to be selected. Thus, the TIS02 bit cannot be set to 1 when f_{SUB} is selected as f_{CLK} (CSS in CKC register = 1).

Caution 3. When selecting an event input signal from the ELC using timer I/O select register 0 (TIOS0), select f_{CLK} using timer clock select register 0 (TPS0).

30.3.8 A/D test function

The IEC60730 standard mandates testing the A/D converter. The A/D test function is used to check whether the A/D converter is operating normally by executing A/D conversions of the positive reference voltage and negative reference voltage of the A/D converter, analog input channel (ANI), temperature sensor output voltage, and internal reference voltage. For details on the checking method, refer to the safety function (A/D test) application note (R01AN0955).

The analog multiplexer can be checked using the following procedure.

(1) Select the ANIx pin as the target for A/D conversion by setting the ADTES register (ADTES1, ADTES0 = 0, 0).
(2) Perform A/D conversion for the ANIx pin (conversion result 1-1).
(3) Select the negative reference voltage of the A/D converter as the target for A/D conversion by setting the ADTES register (ADTES1, ADTES0 = 1, 0).
(4) Perform A/D conversion of the negative reference voltage of the A/D converter (conversion result 2-1).
(5) Select the ANIx pin as the target for A/D conversion by setting the ADTES register (ADTES1, ADTES0 = 0, 0).
(6) Perform A/D conversion for the ANIx pin (conversion result 1-2).
(7) Select the positive reference voltage of the A/D converter as the target for A/D conversion by setting the ADTES register (ADTES1, ADTES0 = 1, 1).
(8) Perform A/D conversion of the positive reference voltage of the A/D converter (conversion result 2-2).
(9) Select the ANIx pin as the target for A/D conversion by setting the ADTES register (ADTES1, ADTES0 = 0, 0).
(10) Perform A/D conversion for the ANIx pin (conversion result 1-3).
(11) Make sure that “conversion result 1-1” = “conversion result 1-2” = “conversion result 1-3”.
(12) Make sure that the A/D conversion results of “conversion result 2-1” are all 0 and those of “conversion result 2-2” are all 1.

Using the procedure above can confirm that the analog multiplexer is selected and all wiring is connected.

Remark 1. If the analog input voltage is variable during conversion in steps (1) to (10) above, use another method to check the analog multiplexer.

Remark 2. The conversion results might contain an error. Consider an appropriate level of error when comparing the conversion results.

Figure 30 - 15 Configuration of A/D Test Function

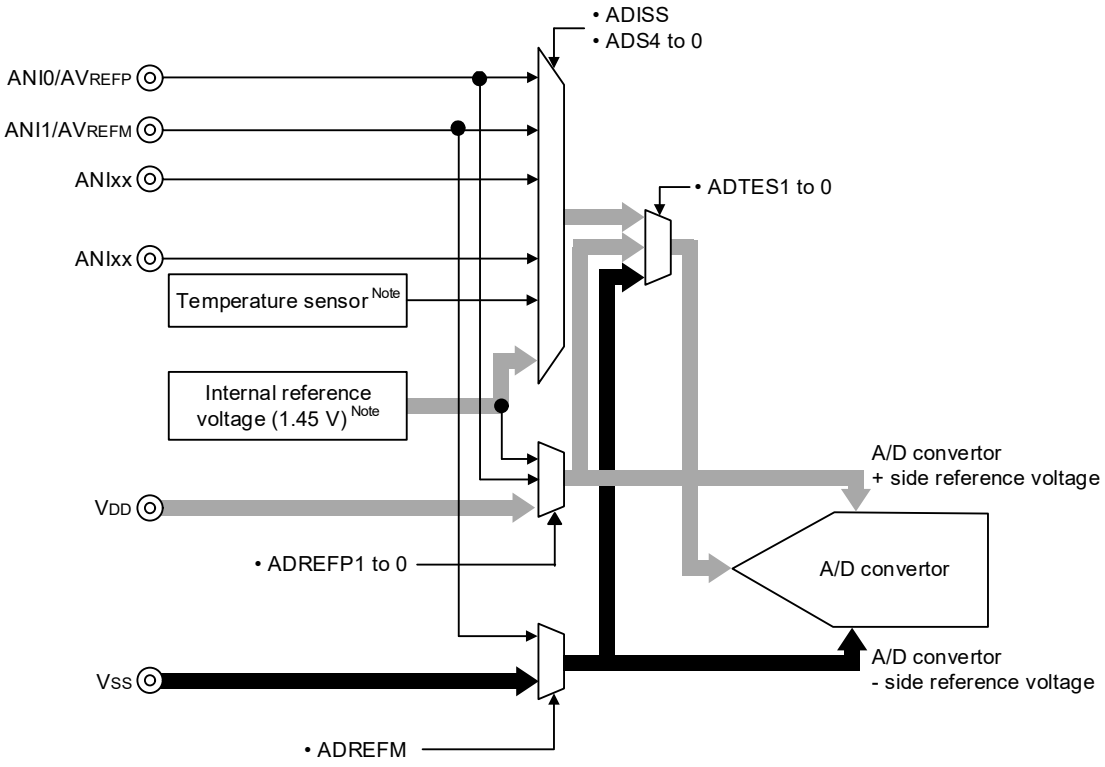

Note Selectable only in HS (high-speed main) mode.

30.3.8.1 A/D test register (ADTES)

This register is used to select the A/D converter positive reference voltage, negative reference voltage, analog input channel (ANIxx), temperature sensor output voltage, or internal reference voltage (1.45 V) as the target of A/D conversion.

When using the A/D test function, specify the following settings:

- Select the negative reference voltage as the target of A/D conversion when measuring the zero-scale.
- Select the positive reference voltage as the target of A/D conversion when measuring the full-scale.

The ADTES register can be set by an 8-bit memory manipulation instruction.

Reset signal generation clears this register to 00H.

Figure 30 - 16 Format of A/D test register (ADTES)

Address: F0013H After reset: 00H R/W

Symbol	7	6	5	4	3	2	1	0
ADTES	0	0	0	0	0	0	ADTES1	ADTES0

ADTES1	ADTES0	A/D conversion target
0	0	ANIxx/temperature sensor output Note/internal reference voltage (1.45 V) Note (This is specified using the analog input channel specification register (ADS).)
1	0	Negative reference voltage (selected by the ADREFM bit in the ADM2 register)
1	1	Positive reference voltage (selected by the ADREFP1 and ADREFP0 bits in the ADM2 register) Note
Other than the above		Setting prohibited

Note Temperature sensor output voltage/internal reference voltage (1.45 V) can be used only in HS (high-speed main) mode.

30.3.8.2 Analog input channel specification register (ADS)

This register specifies the input channel of the analog voltage to be A/D converted.

Set A/D test register (ADTES) to 00H when measuring the ANIxx/temperature sensor output /internal reference voltage (1.45 V).

The ADS register can be set by a 1-bit or 8-bit memory manipulation instruction.

Reset signal generation clears this register to 00H.

Figure 30 - 17 Format of Analog input channel specification register (ADS)

Address: FFF31H After reset: 00H R/W

Symbol	7	6	5	4	3	2	1	0
ADS	ADISS	0	0	ADS4	ADS3	ADS2	ADS1	ADS0

○ Select mode (ADMD = 0)

ADISS	ADS4	ADS3	ADS2	ADS1	ADS0	Analog input channel	Input source
0	0	0	0	0	0	ANI0	P20/ANI0/AVREFP pin
0	0	0	0	0	1	ANI1	P21/ANI1/AVREFM pin
0	0	0	0	1	0	ANI2	P22/ANI2 pin
0	0	0	0	1	1	ANI3	P23/ANI3 pin
0	0	0	1	0	0	ANI4	P24/ANI4 pin
0	0	0	1	0	1	ANI5	P25/ANI5 pin
0	0	0	1	1	0	ANI6	P26/ANI6 pin
0	0	0	1	1	1	ANI7	P27/ANI7 pin
0	1	0	0	0	0	ANI16	P03/ANI16 pin Note 1
0	1	0	0	0	1	ANI17	P02/ANI17 pin Note 2
0	1	0	0	1	0	ANI18	P147/ANI18 pin
0	1	0	0	1	1	ANI19	P120/ANI19 pin
0	1	0	1	0	0	ANI20	P100/ANI20 pin
0	1	0	1	0	1	ANI21	P11/ANI21
0	1	0	1	1	0	ANI22	P12/ANI22 Note 4
0	1	0	1	1	1	ANI23	P13/ANI23 Note 4
0	1	1	0	0	0	ANI24	P14/ANI24 Note 4
0	1	1	0	0	1	—	PGAOUT (PGA output)
1	0	0	0	0	0	—	Temperature sensor output Note 3
1	0	0	0	0	1	—	Internal reference voltage output (1.45 V) Note 3
Other than the above						Setting prohibited	

Note 1. 24-, 32-, 36-, 48-pin products: P01/ANI16 pin

Note 2. 24-, 32-, 36-, 48-pin products: P00/ANI17 pin

Note 3. This setting can be used only in HS (high-speed main) mode.

Note 4. Not present in the 24-pin products.

(**Cautions** are listed on the next page.)

Caution 1. Be sure to clear bits 5 and 6 to 0.

Caution 2. For ports that set to analog input using the PMC registers, select input mode using port mode register 0, 1, 2, 12, or 14 (PM0, PM1, PM2, PM12, PM14).

Caution 3. Do not use the ADS register to set ports that to be set as digital I/O using port mode control register 0, 1, 2, 12, or 14 (PMC0, PMC10, PMC12, PMC14).

Caution 4. Only rewrite the value of the ADISS bit while conversion is stopped (ADCS = 0, ADCE = 0).

Caution 5. When using AV_{REFP} as the positive reference voltage of the A/D converter, do not select ANI0 as an A/D conversion channel.

Caution 6. When using AV_{REFM} as the negative reference voltage of the A/D converter, do not select ANI1 as an A/D conversion channel.

Caution 7. If ADISS is set to 1, the internal reference voltage output (1.45 V) cannot be used for the positive reference voltage. Also, the first conversion result cannot be used after ADISS is set to 1. For details on the setup flow, see 15.7.4 Setup when temperature sensor output voltage/internal reference voltage is selected (example for software trigger mode and one-shot conversion mode).

Caution 8. Do not set ADISS to 1 when entering HALT mode while in STOP mode or while the CPU operates on the subsystem clock. With ADISS = 1, the current value of the A/D converter reference voltage current (I_{ADREF}) listed in 37.3.2 Supply current characteristics is added.

30.3.9 Digital output signal level detection function for I/O pins

In the IEC60730, it is required to check that the I/O function correctly operates.

By using the digital output signal level detection function for I/O pins, the digital output level of the pin can be read when the port is set to output mode.

30.3.9.1 Port mode select register (PMS)

This register is used to select the output level from output latch level or pin output level when the pin is output mode in which PMm bit of port mode register (PMm) is 0.

This register can be set by a 1-bit or 8-bit memory manipulation instruction.

Reset signal generation clears these registers to 00H.

Figure 30 - 18 Format of Port mode select register (PMS)

Address: F007BH After reset: 00H R/W

Symbol	7	6	5	4	3	2	1	0
PMS	0	0	0	0	0	0	0	PMS0

PMS0	Method for selecting output level to be read when pin is output mode
0	Pmn register value is read.
1	Digital output level of the pin is read.

Caution 1. While the PMS0 bit in the PMS register is set to 1, do not change the value of the port register (Pxx) using a bit manipulation instruction. To change the value of the port register (Pxx), use an 8-bit data manipulation instruction.

Caution 2. When the digital output level of a pin that is held in the high-impedance state by the timer RD pulse output forced cutoff function, the read value is 0.

Remark m = 0 to 7, 12, 14
n = 0 to 7

CHAPTER 31 REGULATOR

31.1 Regulator Overview

The RL78/G1F contains a circuit for operating the device with a constant voltage. At this time, in order to stabilize the regulator output voltage, connect the REGC pin to V_{SS} via a capacitor (0.47 to 1 μF). Also, use a capacitor with good characteristics, since it is used to stabilize internal voltage.

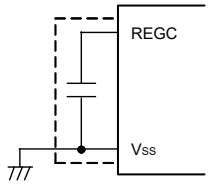

Caution Keep the wiring length as short as possible for the broken-line part in the above figure.

The regulator output voltage, see **Table 31 - 1**.

Table 31 - 1 Regulator Output Voltage Conditions

Mode	Output Voltage	Condition
LV (low-voltage main) mode	1.8 V	—
LS (low-speed main) mode		
HS (high-speed main) mode	1.8 V	In STOP mode
		When both the high-speed system clock (f_{SUB}) and the high-speed on-chip oscillator clock (f_{IH}) are stopped during CPU operation with the subsystem clock (f_{XT})
		When both the high-speed system clock (f_{SUB}) and the high-speed on-chip oscillator clock (f_{IH}) are stopped during the HALT mode when the CPU operation with the subsystem clock (f_{XT}) has been set
	2.1 V	Other than above (include during OCD mode) Note

Note When it shifts to the subsystem clock operation or STOP mode during the on-chip debugging, the regulator output voltage is kept at 2.1 V (not decline to 1.8 V).

CHAPTER 32 OPTION BYTE

32.1 Functions of Option Bytes

Addresses 000C0H to 000C3H of the flash memory of the RL78/G1F form an option byte area.
Option bytes consist of user option byte (000C0H to 000C2H) and on-chip debug option byte (000C3H).
Upon power application or resetting and starting, an option byte is automatically referenced and a specified function is set. When using the product, be sure to set the following functions by using the option bytes.
For the bits to which no function is allocated, do not change their initial values.
To use the boot swap operation during self-programming, 000C0H to 000C3H are replaced by 010C0H to 010C3H. Therefore, set the same values as 000C0H to 000C3H to 010C0H to 010C3H.

Remark The option bytes should always be set regardless of whether each function is used.

32.1.1 User option byte (000C0H to 000C2H/010C0H to 010C2H)

(1) 000C0H/010C0H

○ Setting of watchdog timer operation
- Enabling or disabling of counter operation
- Enabling or disabling of counter operation in the HALT or STOP mode

○ Setting of interval time of watchdog timer

○ Setting of window open period of watchdog timer

○ Setting of interval interrupt of watchdog timer
- Interval interrupt is used or not used

Caution Set the same value as 000C0H to 010C0H when the boot swap operation is used because 000C0H is replaced by 010C0H.

(2) 000C1H/010C1H

○ Setting of LVD operation mode
- Interrupt & reset mode
- Reset mode
- Interrupt mode
- LVD off (external reset input from the $\overline{\text{RESET}}$ pin is used)

○ Setting of LVD detection level (V_{LVDH}, V_{LVDL}, V_{LVD})

Caution 1. After power is supplied, the reset state must be retained until the operating voltage becomes in the range defined in 37.4 or 38.4 AC Characteristics. This is done by utilizing the voltage detection circuit or controlling the externally input reset signal. After the power supply is turned off, this LSI should be placed in the STOP mode, or placed in the reset state by utilizing the voltage detection circuit or controlling the externally input reset signal, before the voltage falls below the operating range. The range of operating voltage varies with the setting of the user option byte (000C2H or 010C2H).

Caution 2. Set the same value as 000C1H to 010C1H when the boot swap operation is used because 000C1H is replaced by 010C1H.

(3) 000C2H/010C2H

○ Setting of flash operation mode
- LV (low-voltage main) mode
- LS (low-speed main) mode
- HS (high-speed main) mode

○ Setting of the frequency of the high-speed on-chip oscillator
- Select from 1 MHz to 32 MHz, 48 MHz, and 64 MHz.

Caution Set the same value as 000C2H to 010C2H when the boot swap operation is used because 000C2H is replaced by 010C2H.

32.1.2 On-chip debug option byte (000C3H/ 010C3H)

○ Control of on-chip debug operation
- On-chip debug operation is disabled or enabled.

○ Handling of data of flash memory in case of failure in on-chip debug security ID authentication
- Data of flash memory is erased or not erased in case of failure in on-chip debug security ID authentication.

Caution Set the same value as 000C3H to 010C3H when the boot swap operation is used because 000C3H is replaced by 010C3H.

32.2 Format of User Option Byte

The format of user option byte is shown below.

Figure 32 - 1 Format of User Option Byte (000C0H/010C0H)

Address: 000C0H/010C0H Note 1

7	6	5	4	3	2	1	0
WDTINT	WINDOW1	WINDOW0	WDTON	WDCS2	WDCS1	WDCS0	WDSTBYON

WDTINT	Use of interval interrupt of watchdog timer
0	Interval interrupt is not used.
1	Interval interrupt is generated when 75% + 1/2 f_{IL} of the overflow time is reached.

WINDOW1	WINDOW0	Watchdog timer window open period Note 2
0	0	Setting prohibited
0	1	50%
1	0	75%
1	1	100%

WDTON	Operation control of watchdog timer counter
0	Counter operation disabled (counting stopped after reset)
1	Counter operation enabled (counting started after reset)

WDCS2	WDCS1	WDCS0	Watchdog timer overflow time (f_{IL} = 17.25 kHz (MAX.))
0	0	0	$2^6/f_{IL}$ (3.71 ms)
0	0	1	$2^7/f_{IL}$ (7.42 ms)
0	1	0	$2^8/f_{IL}$ (14.84 ms)
0	1	1	$2^9/f_{IL}$ (29.68 ms)
1	0	0	$2^{11}/f_{IL}$ (118.72 ms)
1	0	1	$2^{13}/f_{IL}$ (474.90 ms)
1	1	0	$2^{14}/f_{IL}$ (949.80 ms)
1	1	1	$2^{16}/f_{IL}$ (3799.19 ms)

WDSTBYON	Operation control of watchdog timer counter (HALT/STOP mode)
0	Counter operation stopped in HALT/STOP mode Note 2
1	Counter operation enabled in HALT/STOP mode

Note 1. Set the same value as 000C0H to 010C0H when the boot swap operation is used because 000C0H is replaced by 010C0H.

Note 2. The window open period is 100% when WDSTBYON = 0, regardless the value of the WINDOW1 and WINDOW0 bits.

Remark f_{IL}: Low-speed on-chip oscillator clock frequency

Figure 32 - 2 Format of User Option Byte (000C1H/010C1H) (1/4)

Address: 000C1H/010C1H Note

7	6	5	4	3	2	1	0
VPOC2	VPOC1	VPOC0	1	LVIS1	LVIS0	LVIMDS1	LVIMDS0

• LVD setting (interrupt & reset mode)

Detection Voltage			Option Byte Setting Value						
V_{LVDH}		V_{LVDL}	VPOC2	VPOC1	VPOC0	LVIS1	LVIS0	Mode setting	
Rising edge	Falling edge	Falling edge						LVIMDS1	LVIMDS0
1.77 V	1.73 V	1.63 V	0	0	0	1	0	1	0
1.88 V	1.84 V					0	1		
2.92 V	2.86 V					0	0		
1.98 V	1.94 V	1.84 V		0	1	1	0		
2.09 V	2.04 V					0	1		
3.13 V	3.06 V					0	0		
2.61 V	2.55 V	2.45 V		1	0	1	0		
2.71 V	2.65 V					0	1		
3.75 V	3.67 V					0	0		
2.92 V	2.86 V	2.75 V		1	1	1	0		
3.02 V	2.96 V					0	1		
4.06 V	3.98 V					0	0		
—			Settings other than the above are prohibited						

Note Set the same value as 000C1H to 010C1H when the boot swap operation is used because 000C1H is replaced by 010C1H.

Caution **Be sure to set bit 4 to "1".**

Remark 1. For details on the LVD circuit, see **CHAPTER 29 VOLTAGE DETECTOR**.

Remark 2. The detection voltage is a typical value. For details, see **37.6.7** or **38.6.7** LVD circuit characteristics.

Figure 32 - 3 Format of User Option Byte (000C1H/010C1H) (2/4)

Address: 000C1H/010C1H Note

7	6	5	4	3	2	1	0
VPOC2	VPOC1	VPOC0	1	LVIS1	LVIS0	LVIMDS1	LVIMDS0

- LVD setting (reset mode)

Detection voltage		Option byte Setting Value						
V_{LVD}		VPOC2	VPOC1	VPOC0	LVIS1	LVIS0	Mode setting	
Rising edge	Falling edge						LVIMDS1	LVIMDS0
1.67 V	1.63 V	0	0	0	1	1	1	1
1.77 V	1.73 V		0	0	1	0		
1.88 V	1.84 V		0	1	1	1		
1.98 V	1.94 V		0	1	1	0		
2.09 V	2.04 V		0	1	0	1		
2.50 V	2.45 V		1	0	1	1		
2.61 V	2.55 V		1	0	1	0		
2.71 V	2.65 V		1	0	0	1		
2.81 V	2.75 V		1	1	1	1		
2.92 V	2.86 V		1	1	1	0		
3.02 V	2.96 V		1	1	0	1		
3.13 V	3.06 V		0	1	0	0		
3.75 V	3.67 V		1	0	0	0		
4.06 V	3.98 V		1	1	0	0		
—		Settings other than the above are prohibited						

Note Set the same value as 000C1H to 010C1H when the boot swap operation is used because 000C1H is replaced by 010C1H.

Caution **Be sure to set bit 4 to "1".**

Remark 1. For details on the LVD circuit, see **CHAPTER 29 VOLTAGE DETECTOR**.

Remark 2. The detection voltage is a typical value. For details, see **37.6.7** or **38.6.7** LVD circuit characteristics.

Figure 32 - 4 Format of User Option Byte (000C1H/010C1H) (3/4)

Address: 000C1H/010C1H Note

7	6	5	4	3	2	1	0
VPOC2	VPOC1	VPOC0	1	LVIS1	LVIS0	LVIMDS1	LVIMDS0

• LVD setting (interrupt mode)

Detection voltage		Option byte Setting Value						
V_{LVD}		VPOC2	VPOC1	VPOC0	LVIS1	LVIS0	Mode setting	
Rising edge	Falling edge						LVIMDS1	LVIMDS0
1.67 V	1.63 V	0	0	0	1	1	0	1
1.77 V	1.73 V		0	0	1	0		
1.88 V	1.84 V		0	1	1	1		
1.98 V	1.94 V		0	1	1	0		
2.09 V	2.04 V		0	1	0	1		
2.50 V	2.45 V		1	0	1	1		
2.61 V	2.55 V		1	0	1	0		
2.71 V	2.65 V		1	0	0	1		
2.81 V	2.75 V		1	1	1	1		
2.92 V	2.86 V		1	1	1	0		
3.02 V	2.96 V		1	1	0	1		
3.13 V	3.06 V		0	1	0	0		
3.75 V	3.67 V		1	0	0	0		
4.06 V	3.98 V		1	1	0	0		
—		Settings other than the above are prohibited						

Note Set the same value as 000C1H to 010C1H when the boot swap operation is used because 000C1H is replaced by 010C1H.

Caution **Be sure to set bit 4 to "1".**

Remark 1. For details on the LVD circuit, see **CHAPTER 29 VOLTAGE DETECTOR**.

Remark 2. The detection voltage is a typical value. For details, see **37.6.7** or **38.6.7** LVD circuit characteristics.

Figure 32 - 5 Format of User Option Byte (000C1H/010C1H) (4/4)

Address: 000C1H/010C1H Note

7	6	5	4	3	2	1	0
VPOC2	VPOC1	VPOC0	1	LVIS1	LVIS0	LVIMDS1	LVIMDS0

• LVD off setting (external reset input from the $\overline{\text{RESET}}$ pin is used)

Detection voltage		Option byte Setting Value						
V_{LVD}		VPOC2	VPOC1	VPOC0	LVIS1	LVIS0	Mode setting	
Rising edge	Falling edge						LVIMDS1	LVIMDS0
—	—	1	×	×	×	×	×	1
—		Settings other than the above are prohibited						

Note Set the same value as 000C1H to 010C1H when the boot swap operation is used because 000C1H is replaced by 010C1H.

Caution 1. Be sure to set bit 4 to "1".

Caution 2. After power is supplied, the reset state must be retained until the operating voltage becomes in the range defined in 37.4 or **38.4 AC Characteristics. This is done by utilizing the voltage detection circuit or controlling the externally input reset signal. After the power supply is turned off, this LSI should be placed in the STOP mode, or placed in the reset state by utilizing the voltage detection circuit or controlling the externally input reset signal, before the voltage falls below the operating range. The range of operating voltage varies with the setting of the user option byte (000C2H or 010C2H).**

Remark 1. ×: Don't care

Remark 2. For details on the LVD circuit, see **CHAPTER 29 VOLTAGE DETECTOR**.

Remark 3. The detection voltage is a typical value. For details, see **37.6.7** or **38.6.7** LVD circuit characteristics.

Figure 32 - 6 Format of Option Byte (000C2H/010C2H)

Address: 000C2H/010C2H Note

7	6	5	4	3	2	1	0
CMODE1	CMODE0	1	FRQSEL4	FRQSEL3	FRQSEL2	FRQSEL1	FRQSEL0

CMODE1	CMODE0	Setting of flash operation mode		
			Operating Frequency Range	Operating Voltage Range
0	0	LV (low-voltage main) mode	1 to 4 MHz	1.6 to 5.5 V
1	0	LS (low-speed main) mode	1 to 8 MHz	1.8 to 5.5 V
1	1	HS (high-speed main) mode	1 to 16 MHz	2.4 to 5.5 V
			1 to 32 MHz	2.7 to 5.5 V
Other than above		Setting prohibited		

FRQSEL4	FRQSEL3	FRQSEL2	FRQSEL1	FRQSEL0	Frequency of the high-speed on-chip oscillator clock	
					f_{HOCO}	f_{IH}
1	1	0	0	0	64 MHz	32 MHz
1	0	0	0	0	48 MHz	24 MHz
0	1	0	0	0	32 MHz	32 MHz
0	0	0	0	0	24 MHz	24 MHz
0	1	0	0	1	16 MHz	16 MHz
0	0	0	0	1	12 MHz	12 MHz
0	1	0	1	0	8 MHz	8 MHz
0	0	0	1	0	6 MHz	6 MHz
0	1	0	1	1	4 MHz	4 MHz
0	0	0	1	1	3 MHz	3 MHz
0	1	1	0	0	2 MHz	2 MHz
0	1	1	0	1	1 MHz	1 MHz
Other than above					Setting prohibited	

Note Set the same value as 000C2H to 010C2H when the boot swap operation is used because 000C2H is replaced by 010C2H.

Caution 1. Be sure to set bit 5 to 1.

Caution 2. The operating frequency range and operating voltage range depend on each operating mode of the flash memory. See 37.4 or 38.4 AC Characteristics for details.

32.3 Format of On-chip Debug Option Byte

The format of on-chip debug option byte is shown below.

Figure 32 - 7 Format of On-chip Debug Option Byte (000C3H/010C3H)

Address: 000C3H/010C3H Note

7	6	5	4	3	2	1	0
OCDENSET	0	0	0	0	1	0	OCDERSD

OCDENSET	OCDERSD	Control of on-chip debug operation
0	0	Disables on-chip debug operation.
0	1	Setting prohibited
1	0	Enables on-chip debugging. Erases data of flash memory in case of failures in authenticating on-chip debug security ID.
1	1	Enables on-chip debugging. Does not erases data of flash memory in case of failures in authenticating on-chip debug security ID.

Note Set the same value as 000C3H to 010C3H when the boot swap operation is used because 000C3H is replaced by 010C3H.

Caution **Bits 7 and 0 (OCDENSET and OCDERSD) can only be specified a value.**
Be sure to set 000010B to bits 6 to 1.

Remark The value on bits 3 to 1 will be written over when the on-chip debug function is in use and thus it will become unstable after the setting.
However, be sure to set the default values (0, 1, and 0) to bits 3 to 1 at setting.

32.4 Setting of Option Byte

The user option byte and on-chip debug option byte can be set using the assembler linker option, in addition to describing in the source. When doing so, the contents set by using the link option take precedence, even if descriptions exist in the source, as mentioned below.

A software description example of the option byte setting is shown below.

```
OPT     CSEG    OPT_BYTE
        DB      36H     ; Does not use interval interrupt of watchdog timer,
                        ; Enables watchdog timer operation,
                        ; Window open period of watchdog timer is 50%,
                        ; Overflow time of watchdog timer is 2^9/fIL,
                        ; Stops watchdog timer operation during HALT/STOP mode
        DB      1AH     ; Select 1.63 V for VLVDL
                        ; Select rising edge 1.77 V, falling edge 1.73 V for VLVDH
                        ; Select the interrupt & reset mode as the LVD operation mode
        DB      2DH     ; Select the LV (low-voltage main) mode as the flash operation mode
                          and 1 MHz as the frequency of the high-speed on-chip oscillator clock
        DB      85H     ; Enables on-chip debug operation, does not erase flash memory
                          data when security ID authorization fails
```

When the boot swap function is used during self-programming, 000C0H to 000C3H is switched to 010C0H to 010C3H. Describe to 010C0H to 010C3H, therefore, the same values as 000C0H to 000C3H as follows.

```
OPT2    CSEG    AT      010C0H
        DB              36H     ; Does not use interval interrupt of watchdog timer,
                                ; Enables watchdog timer operation,
                                ; Window open period of watchdog timer is 50%,
                                ; Overflow time of watchdog timer is 2^9/fIL,
                                ; Stops watchdog timer operation during HALT/STOP mode
        DB              1AH     ; Select 1.63 V for VLVDL
                                ; Select rising edge 1.77 V, falling edge 1.73 V for VLVDH
                                ; Select the interrupt & reset mode as the LVD operation mode
        DB              2DH     ; Select the LV (low main voltage) mode as the flash operation mode
                                  and 1 MHz as the frequency of the high-speed on-chip oscillator clock
        DB              85H     ; Enables on-chip debug operation, does not erase flash memory
                                  data when security ID authorization fails
```

Caution **To specify the option byte by using assembly language, use OPT_BYTE as the relocation attribute name of the CSEG pseudo instruction. To specify the option byte to 010C0H to 010C3H in order to use the boot swap function, use the relocation attribute AT to specify an absolute address.**

CHAPTER 33 FLASH MEMORY

The RL78 microcontroller incorporates the flash memory to which a program can be written, erased, and overwritten while mounted on the board. The flash memory includes the “code flash memory”, in which programs can be executed, and the “data flash memory”, an area for storing data.

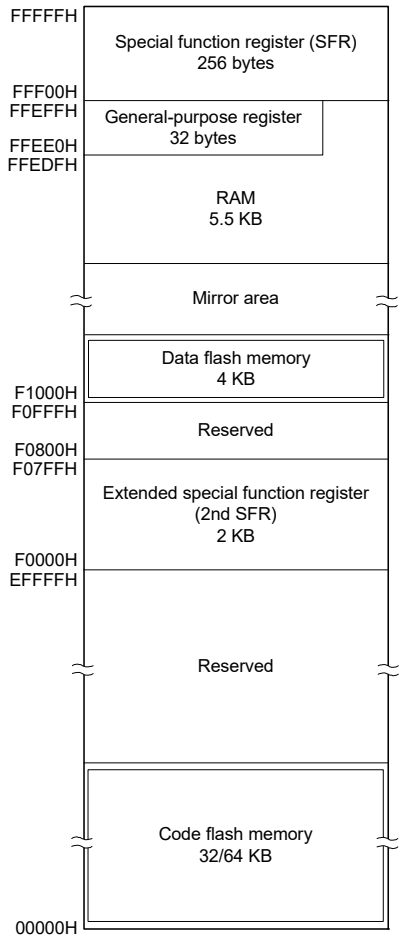

The following methods for programming the flash memory are available.

The code flash memory can be rewritten to through serial programming using a flash memory programmer or an external device (UART communication), or through self-programming.

- Serial Programming Using Flash Memory Programmer (see **33.1**)
  Data can be written to the flash memory on-board or off-board by using a dedicated flash memory programmer.
- Serial Programming Using External Device (that Incorporates UART) (see **33.2**)
  Data can be written to the flash memory on-board through UART communication with an external device (microcontroller or ASIC).
- Self-Programming (see **33.6**)
  The user application can execute self-programming of the code flash memory by using the flash self-programming library.

The data flash memory can be rewritten to by using the data flash library during user program execution (background operation). For access and writing to the data flash memory, see **33.8 Data Flash**.

33.1 Serial Programming Using Flash Memory Programmer

The following dedicated flash memory programmer can be used to write data to the internal flash memory of the RL78 microcontroller.

- PG-FP5, FL-PR5
- E1 on-chip debugging emulator

Data can be written to the flash memory on-board or off-board, by using a dedicated flash memory programmer.

(1) On-board programming
The contents of the flash memory can be rewritten after the RL78 microcontroller has been mounted on the target system. The connectors that connect the dedicated flash memory programmer must be mounted on the target system.

(2) Off-board programming
Data can be written to the flash memory with a dedicated program adapter (FA series) before the RL78 microcontroller is mounted on the target system.

Remark FL-PR5 and FA series are products of Naito Densei Machida Mfg. Co., Ltd.

Table 33 - 1 Wiring Between RL78/G1F and Dedicated Flash Memory Programmer

Pin Configuration of Dedicated Flash Memory Programmer				Pin Name	Pin No.				
					24-pin	32-pin	36-pin	48-pin	64-pin
Signal Name		I/O	Pin Function		WQFN (4 × 4)	LQFP (7 × 7)	FLGA (4 × 4)	LQFP (7 × 7)	LQFP (10 × 10)
PG-FP5, FL-PR5	E1 on-chip debugging emulator								
SI/RxD	TOOL0	I/O	Transmit/ receive signal	TOOL0/ P40	24	1	F6	39	5
/RESET	$\overline{\text{RESET}}$	Output	Reset signal	$\overline{\text{RESET}}$	1	2	E5	40	6
V_{DD}		I/O	V_{DD} voltage generation/ power monitoring	V_{DD}	7	8	B6	48	15
GND		—	Ground	V_{SS}	6	7	C5	47	13
				REGC Note	5	6	D5	46	12
FLMD1	EMV_{DD}	—	Driving power for TOOL0 pin	V_{DD}	7	8	A6	48	16

Note Connect REGC pin to ground via a capacitor (0.47 to 1 μF).

Remark Pins that are not indicated in the above table can be left open when using the flash memory programmer for flash programming.

33.1.1 Programming Environment

The environment required for writing a program to the flash memory of the RL78 microcontroller is illustrated below.

Figure 33 - 1 Environment for Writing Program to Flash Memory

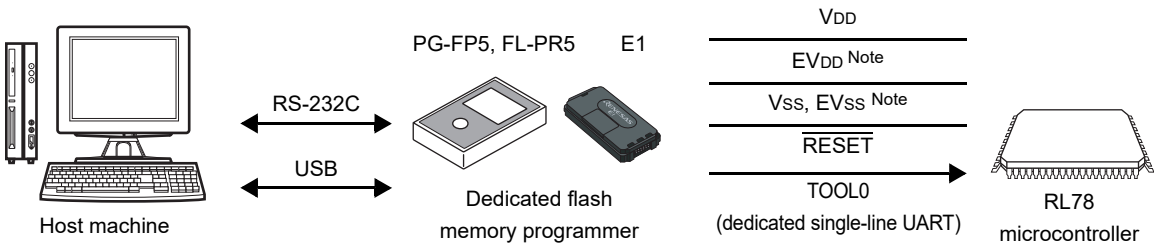

Note 64, 36-pin products only.

A host machine that controls the dedicated flash memory programmer is necessary.
To interface between the dedicated flash memory programmer and the RL78 microcontroller, the TOOL0 pin is used for manipulation such as writing and erasing via a dedicated single-line UART.

33.1.2 Communication Mode

Communication between the dedicated flash memory programmer and the RL78 microcontroller is established by serial communication using the TOOL0 pin via a dedicated single-line UART of the RL78 microcontroller.

Transfer rate: 1 M, 500 k, 250 k, 115.2 kbps

Figure 33 - 2 Communication with Dedicated Flash Memory Programmer

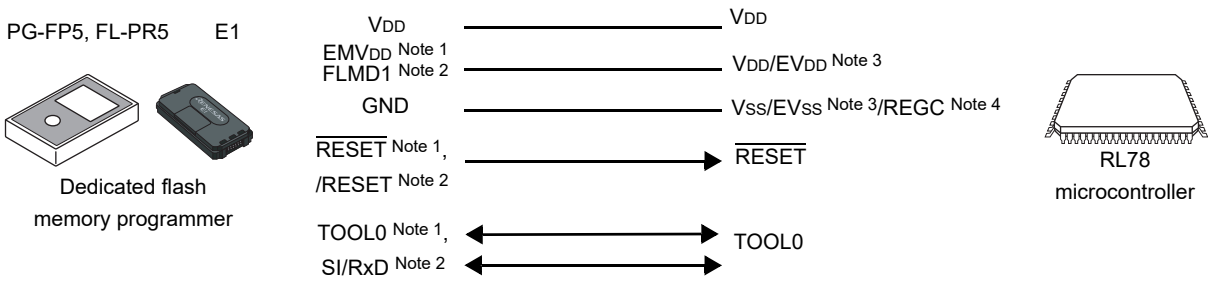

Note 1. When using E1 on-chip debugging emulator.
Note 2. When using PG-FP5 or FL-PR5.
Note 3. 64, 36-pin products only.
Note 4. Connect REGC pin to ground via a capacitor (0.47 to 1 μF).

The dedicated flash memory programmer generates the following signals for the RL78 microcontroller. See the manual of PG-FP5, FL-PR5, or E1 on-chip debugging emulator for details.

Table 33 - 2 Pin Connection

Dedicated Flash Memory Programmer				RL78 microcontroller
Signal Name		I/O	Pin Function	Pin Name Note 2
PG-FP5, FL-PR5	E1 on-chip debugging emulator			
V_{DD}		I/O	V_{DD} voltage generation/power monitoring	V_{DD}
GND		—	Ground	V_{SS}, EV_{SS}, REGC Note 1
FLMD1	EMV_{DD}	—	Driving power for TOOL0 pin	V_{DD}, EV_{DD}
/RESET	$\overline{RESET}$	Output	Reset signal	$\overline{RESET}$
SI/RxD	TOOL0	I/O	Transmit/receive signal	TOOL0

Note 1. Connect REGC pin to ground via a capacitor (0.47 to 1 μF).

Note 2. Pins to be connected differ with the product. For details, see **Table 33 - 1**.

33.2 Serial Programming Using External Device (that Incorporates UART)

On-board data writing to the internal flash memory is possible by using the RL78 microcontroller and an external device (a microcontroller or ASIC) connected to a UART.

On the development of flash memory programmer by user, refer to the RL78 Microcontrollers (RL78 Protocol A) Programmer Edition Application Note (R01AN0815).

33.2.1 Programming Environment

The environment required for writing a program to the flash memory of the RL78 microcontroller is illustrated below.

Figure 33 - 3 Environment for Writing Program to Flash Memory

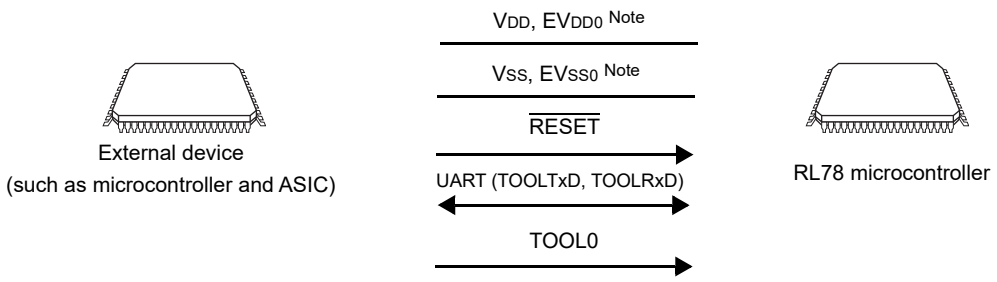

Note 64, 32-pin products only.

Processing to write data to or delete data from the RL78 microcontroller by using an external device is performed on-board. Off-board writing is not possible.

33.2.2 Communication Mode

Communication between the external device and the RL78 microcontroller is established by serial communication using the TOOLTxD and TOOLRxD pins via the dedicated UART of the RL78 microcontroller.

Transfer rate: 1 M, 500 k, 250 k, 115.2 kbps

Figure 33 - 4 Communication with External Device

Note 1. Connect REGC pin to ground via a capacitor (0.47 to 1 μF).
Note 2. 64, 36-pin products only.

The external device generates the following signals for the RL78 microcontroller.

Table 33 - 3 Pin Connection

External Device			RL78 microcontroller
Signal Name	I/O	Pin Function	Pin Name
VDD	I/O	VDD voltage generation/power monitoring	VDD, EVDD0 Note 2
GND	—	Ground	VSS, EVSS0 Note 2, REGC Note 1
RESETOUT	Output	Reset signal output	$\overline{\text{RESET}}$
RxD	Input	Receive signal	TOOLTxD
TxD	Output	Transmit signal	TOOLRxD
PORT	Output	Mode signal	TOOL0

Note 1. Connect REGC pin to ground via a capacitor (0.47 to 1 μF).
Note 2. 64, 36-pin products only.

33.3 Connection of Pins on Board

To write the flash memory on-board by using the flash memory programmer, connectors that connect the dedicated flash memory programmer must be provided on the target system. First provide a function that selects the normal operation mode or flash memory programming mode on the board.
When the flash memory programming mode is set, all the pins not used for programming the flash memory are in the same status as immediately after reset. Therefore, if the external device does not recognize the state immediately after reset, the pins must be handled as described below.

Remark For the flash programming mode, see **33.4.2 Flash memory programming mode**.

33.3.1 P40/TOOL0 pin

In the flash memory programming mode, connect this pin to the dedicated flash memory programmer via an external 1 kΩ pull-up resistor.
When this pin is used as the port pin, use that by the following method.

When used as an input pin: Input of low-level is prohibited for t_{HD} period after external reset release. However, when this pin is used via pull-down resistors, use the 500 kΩ or more resistors.
When used as an output pin: When this pin is used via pull-down resistors, use the 500 kΩ or more resistors.

Remark 1. t_{HD}: How long to keep the TOOL0 pin at the low level from when the external and internal resets end for setting of the flash memory programming mode (see **37.10** or **38.10 Timing of Entry to Flash Memory Programming Modes**).
Remark 2. The SAU and IICA pins are not used for communication between the RL78 microcontroller and dedicated flash memory programmer, because single-line UART (TOOL0 pin) is used.

33.3.2 $\overline{\text{RESET}}$ pin

Signal conflict will occur if the reset signal of the dedicated flash memory programmer and external device are connected to the $\overline{\text{RESET}}$ pin that is connected to the reset signal generator on the board. To prevent this conflict, isolate the connection with the reset signal generator.
The flash memory will not be correctly programmed if the reset signal is input from the user system while the flash memory programming mode is set. Do not input any signal other than the reset signal of the dedicated flash memory programmer and external device.

Figure 33 - 5 Signal Conflict ($\overline{\text{RESET}}$ Pin)

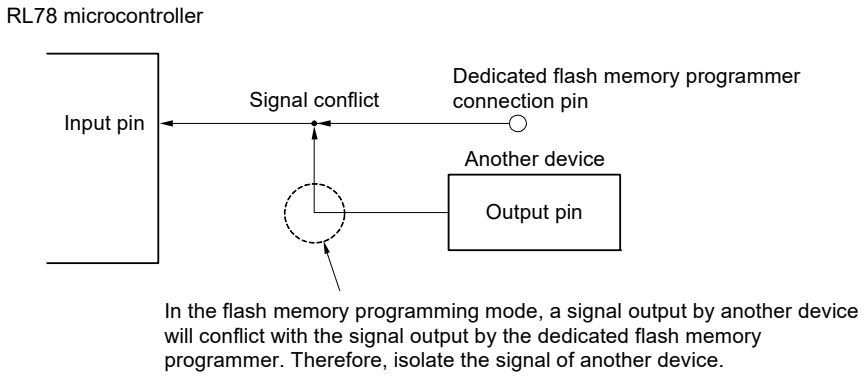

33.3.3 Port pins

Example When the flash memory programming mode is set, all the pins not used for flash memory programming enter the same status as that immediately after reset. If external devices connected to the ports do not recognize the port status immediately after reset, the port pin must be connected to either V_{DD} or EV_{DD0}, or V_{SS} or EV_{SS0}, via a resistor.

33.3.4 REGC pin

Connect the REGC pin to GND via a capacitor having excellent characteristics (0.47 to 1 μF) in the same manner as during normal operation. Also, use a capacitor with good characteristics, since it is used to stabilize internal voltage.

33.3.5 X1 and X2 pins

Connect X1 and X2 in the same status as in the normal operation mode.

Remark In the flash memory programming mode, the high-speed on-chip oscillator clock (f_{IH}) is used.

33.3.6 Power supply

To use the supply voltage output of the flash memory programmer, connect the V_{DD} pin to V_{DD} of the flash memory programmer, and the V_{SS} pin to GND of the flash memory programmer.
To use the on-board supply voltage, connect in compliance with the normal operation mode.
However, when writing to the flash memory by using the flash memory programmer and using the on-board supply voltage, be sure to connect the V_{DD} and V_{SS} pins to V_{DD} and GND of the flash memory programmer to use the power monitor function with the flash memory programmer.

33.4 Programming Method

33.4.1 Serial programming procedure

The following figure illustrates a flow for rewriting the code flash memory through serial programming.

Figure 33 - 6 Code Flash Memory Manipulation Procedure

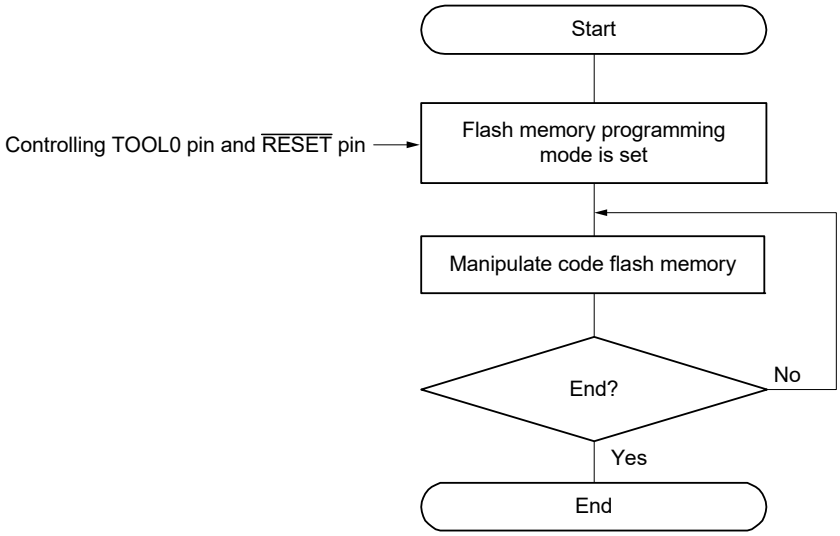

33.4.2 Flash memory programming mode

To rewrite the contents of the code flash memory through serial programming, specify the flash memory programming mode. To enter the mode, set as follows.

<When serial programming by using the dedicated flash memory programmer>
Connect the RL78 microcontroller to a dedicated flash memory programmer. Communication from the dedicated flash memory programmer is performed to automatically switch to the flash memory programming mode.

<When serial programming by using an external device>
Set the TOOL0 pin to the low level, and then cancel the reset (see **Table 33 - 4**). After that, enter flash memory programming mode according to the procedures <1> to <4> shown in **Figure 33 - 7**. For details, refer to the **RL78 microcontrollers (RL78 Protocol A) Programmer Edition Application Note (R01AN0815)**.

Table 33 - 4 Relationship Between TOOL0 Pin and Operation Mode After Reset Release

TOOL0	Operation Mode
EV_{DD}	Normal operation mode
0 V	Flash memory programming mode

Figure 33 - 7 Setting of Flash Memory Programming Mode

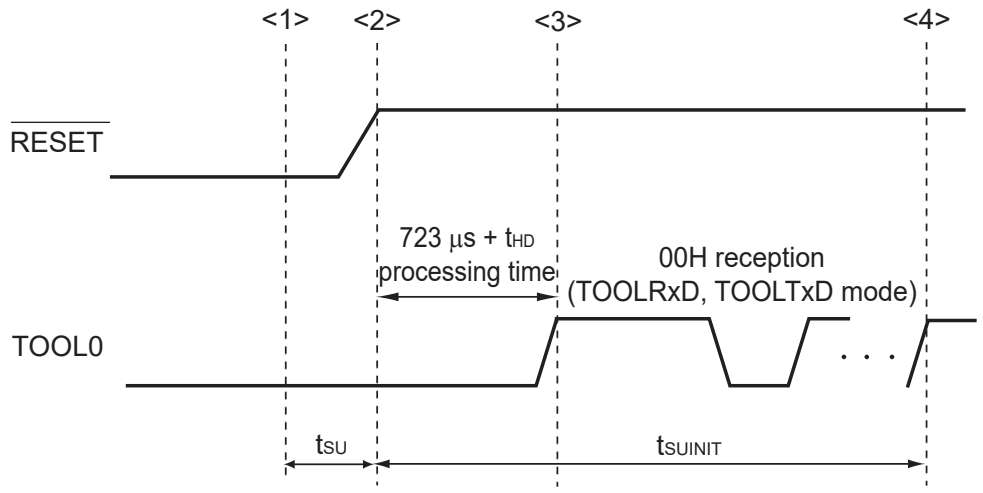

<1> The low level is input to the TOOL0 pin.
<2> The external reset ends (POR and LVD reset must end before the external reset ends).
<3> The TOOL0 pin is set to the high level.
<4> Setting of the flash memory programming mode by UART reception and complete the baud rate setting.

Remark t_{SUINIT}: The segment shows that it is necessary to finish specifying the initial communication settings within 100 ms from when the external resets end.
t_{SU}: How long from when the TOOL0 pin is placed at the low level until a pin reset ends.
t_{HD}: How long to keep the TOOL0 pin at the low level from when the external resets end (the flash firmware processing time is excluded).

For details, see **37.10** or **38.10 Timing of Entry to Flash Memory Programming Modes**.

There are two flash memory programming modes: wide voltage mode and full speed mode. The supply voltage value applied to the microcontroller during write operations and the setting information of the user option byte for setting of the flash memory programming mode determine which mode is selected.
When a dedicated flash memory programmer is used for serial programming, setting the voltage on GUI selects the mode automatically.

Table 33 - 5 Programming Modes and Voltages at Which Data Can Be Written, Erased, or Verified

Power Supply Voltage (V_{DD})	User Option Byte Setting for Switching to Flash Memory Programming Mode		Flash Programming Mode
	Flash Operation Mode	Operating Frequency (f_{CLK})	
2.7 V ≤ V_{DD} ≤ 5.5 V	Blank state		Full speed mode
	HS (high-speed main) mode	1 MHz to 32 MHz	Full speed mode
	LS (low-speed main) mode	1 MHz to 8 MHz	Wide voltage mode
	LV (low-voltage main) mode	1 MHz to 4 MHz	Wide voltage mode
2.4 V ≤ V_{DD} < 2.7 V	Blank state		Full speed mode
	HS (high-speed main) mode	1 MHz to 16 MHz	Full speed mode
	LS (low-speed main) mode	1 MHz to 8 MHz	Wide voltage mode
	LV (low-voltage main) mode	1 MHz to 4 MHz	Wide voltage mode
1.8 V ≤ V_{DD} < 2.4 V	Blank state		Wide voltage mode
	LS (low-speed main) mode	1 MHz to 8 MHz	Wide voltage mode
	LV (low-voltage main) mode	1 MHz to 4 MHz	Wide voltage mode

Remark 1. Using both the wide voltage mode and full speed mode imposes no restrictions on writing, erasing, or verification.
Remark 2. For details about communication commands, see **33.4.4 Communication commands**.

33.4.3 Selecting communication mode

Communication mode of the RL78 microcontroller as follows.

Table 33 - 6 Communication Modes

Communication Mode	Standard Setting Note 1				Pins Used
	Port	Speed Note 2	Frequency	Multiply Rate	
1-line mode (when flash memory programmer is used, or when external device is used)	UART	115200 bps, 250000 bps, 500000 bps, 1 Mbps	—	—	TOOL0
Dedicated UART (when external device is used)	UART	115200 bps, 250000 bps, 500000 bps, 1 Mbps	—	—	TOOLTxD, TOOLRxD

Note 1. Selection items for Standard settings on GUI of the flash memory programmer.

Note 2. Because factors other than the baud rate error, such as the signal waveform slew, also affect UART communication, thoroughly evaluate the slew as well as the baud rate error.

33.4.4 Communication commands

The RL78 microcontroller executes serial programming through the commands listed in **Table 33 - 7**.
The signals sent from the dedicated flash memory programmer or external device to the RL78 microcontroller are called commands, and programming functions corresponding to the commands are executed. For details, refer to the **RL78 microcontroller (RL78 Protocol A) Programmer Edition Application Note (R01AN0815)**.

Table 33 - 7 Flash Memory Control Commands

Classification	Command Name	Function
Verify	Verify	Compares the contents of a specified area of the flash memory with data transmitted from the programmer.
Erase	Block Erase	Erases a specified area in the flash memory.
Blank check	Block Blank Check	Checks if a specified block in the flash memory has been correctly erased
Write	Programming	Writes data to a specified area in the flash memory Note.
Getting information	Silicon Signature	Gets the RL78 microcontroller information (such as the part number, flash memory configuration, and programming firmware version).
	Checksum	Gets the checksum data for a specified area.
Security	Security Set	Sets security information.
	Security Get	Gets security information.
	Security Release	Release setting of prohibition of writing.
Others	Reset	Used to detect synchronization status of communication.
	Baud Rate Set	Sets baud rate when UART communication mode is selected.

Note Confirm that no data has been written to the write area. Because data cannot be erased after block erase is prohibited, do not write data if the data has not been erased.

Product information (such as product name and firmware version) can be obtained by executing the “Silicon Signature” command.

Tables 33 - 8 and 33 - 9 show signature data list and example of signature data list.

Table 33 - 8 Signature Data List

Field name	Description	Number of transmit data
Device code	The serial number assigned to the device	3 bytes
Device name	Device name (ASCII code)	10 bytes
Code flash memory area last address	Last address of code flash memory area (Sent from lower address. Example. 00000H to 0FFFFH (64 KB) → FFH, 1FH, 00H)	3 bytes
Data flash memory area last address	Last address of data flash memory area (Sent from lower address. Example. F1000H to F1FFFH (4 KB) → FFH, 1FH, 0FH)	3 bytes
Firmware version	Version information of firmware for programming (Sent from upper address. Example. From Ver. 1.23 → 01H, 02H, 03H)	3 bytes

Table 33 - 9 Signature Data List

Field name	Description	Number of transmit data	Data (hexadecimal)
Device code	RL78 protocol A	3 bytes	10 00 06
Device name	R5F11BLE	10 bytes	52 = “R” 35 = “5” 46 = “F” 31 = “1” 31 = “1” 42 = “B” 4C = “L” 45 = “E” 20 = “ ” 20 = “ ”
Code flash memory area last address	Code flash memory area 00000H to 0FFFFH (64 KB)	3 bytes	FF FF 00
Data flash memory area last address	Data flash memory area F1000H to F1FFFH (4 KB)	3 bytes	FF 1F 0F
Firmware version	Ver.1.23	3 bytes	01 02 03

33.5 Processing Time for Each Command When PG-FP5 Is in Use (Reference Value)

The following shows the processing time for each command (reference value) when PG-FP5 is used as a dedicated flash memory programmer.

Table 33 - 10 Processing Time for Each Command When PG-FP5 Is in Use (Reference Value)

PG-FP5 Command	Port: TOOL0 (UART)	
	Speed: 1M bps	
	32 Kbytes	64 Kbytes
Erasing	1 s	1.5 s
Writing	1.5 s	2.5 s
Verification	1.5 s	2 s
Writing after erasing	2 s	3 s

Remark The command processing times (reference values) shown in the table are typical values under the following conditions.
Port: TOOL0 (single-line UART)
Speed: 1,000,000 bps
Mode: Full speed mode (flash operation mode: HS (high speed main) mode)

33.6 Self-Programming

The RL78 microcontroller supports a self-programming function that can be used to rewrite the flash memory via a user program. Because this function allows a user application to rewrite the flash memory by using the RL78 microcontroller self-programming library, it can be used to upgrade the program in the field.

Caution 1. The self-programming function cannot be used when the CPU operates with the subsystem clock.

Caution 2. To prohibit an interrupt during self-programming, in the same way as in the normal operation mode, execute the flash self-programming library in the state where the IE flag is cleared (0) by the DI instruction. To enable an interrupt, clear (0) the interrupt mask flag to accept in the state where the IE flag is set (1) by the EI instruction, and then execute the flash self-programming library.

Caution 3. The high-speed on-chip oscillator should be kept operating during self-programming. If it is kept stopped, it should be operated (HIOSTOP = 0). The flash self-programming library should be executed after 30 μs have elapsed when the FRQSEL4 in the user option byte (000C2H) is 0, and after 80 μs have elapsed when the FRQSEL4 is 1.

Remark 1. For details of the self-programming function, refer to the **RL78 microcontroller Flash Self-Programming Library Type01 User's Manual (R01AN0350)**.

Remark 2. For details of the time required to execute self-programming, see the notes on use that accompany the flash self-programming library tool.

The self-programming function has two flash memory programming modes; wide voltage mode and full speed mode. Specify the mode that corresponds to the flash operation mode specified in bits CMODE1 and CMODE0 in option byte 000C2H.

Specify the full speed mode when the HS (high-speed main) mode is specified. Specify the wide voltage mode when the LS (low-speed main) mode or LV (low-voltage main) mode is specified.

If the argument fsl_flash_voltage_u08 is 00H when the FSL_Init function of the flash self-programming library provided by Renesas Electronics is executed, full speed mode is specified. If the argument is other than 00H, the wide voltage mode is specified.

Remark Using both the wide voltage mode and full speed mode imposes no restrictions on writing, erasing, or verification.

33.6.1 Self-programming procedure

The following figure illustrates a flow for rewriting the code flash memory by using a flash self-programming library.

Figure 33 - 8 Flow of Self-Programming (Rewriting Flash Memory)

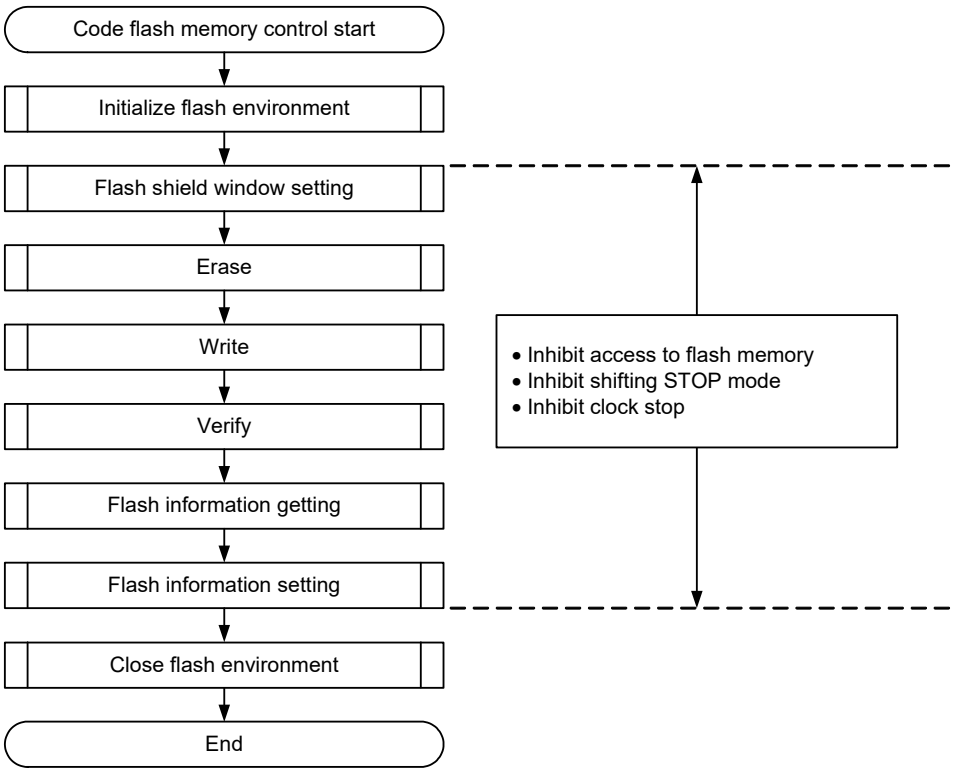

33.6.2 Boot swap function

If rewriting the boot area failed by temporary power failure or other reasons, restarting a program by resetting or overwriting is disabled due to data destruction in the boot area.

The boot swap function is used to avoid this problem.

Before erasing boot cluster 0 Note, which is a boot program area, by self-programming, write a new boot program to boot cluster 1 in advance. When the program has been correctly written to boot cluster 1, swap this boot cluster 1 and boot cluster 0 by using the set information function of the firmware of the RL78 microcontroller, so that boot cluster 1 is used as a boot area. After that, erase or write the original boot program area, boot cluster 0. As a result, even if a power failure occurs while the area is being rewritten, the program is executed correctly because it is booted from boot cluster 1 to be swapped when the program is reset and started next.

Note A boot cluster is a 4 KB area and boot clusters 0 and 1 are swapped by the boot swap function.

Figure 33 - 9 Boot Swap Function

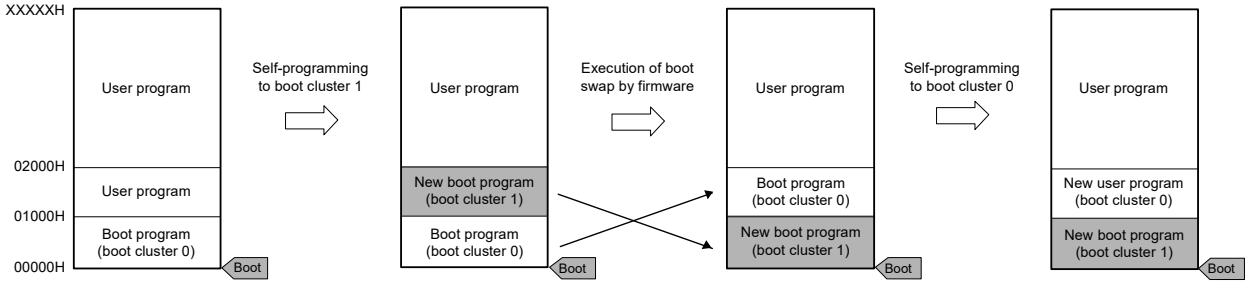

In an example of above figure, it is as follows.

Boot cluster 0: Boot area before boot swap

Boot cluster 1: Boot area after boot swap

Figure 33 - 10 Example of Executing Boot Swapping

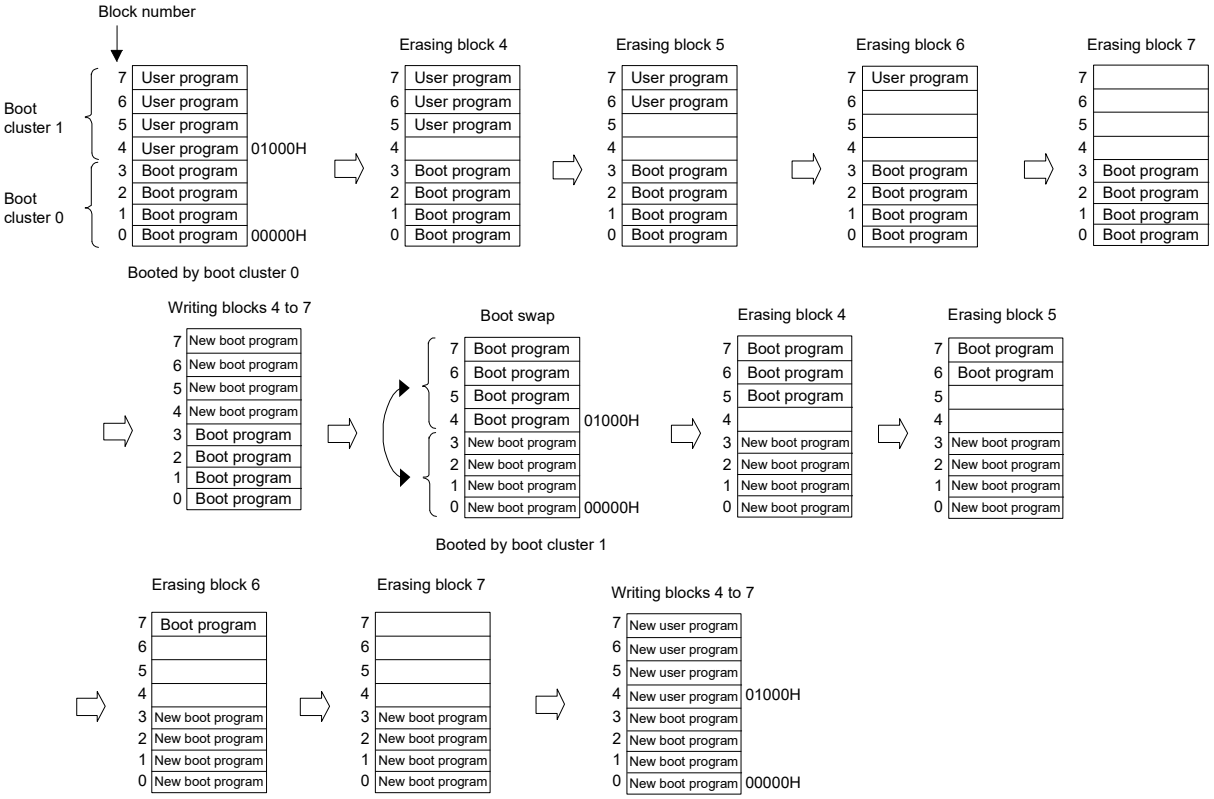

33.6.3 Flash shield window function

The flash shield window function is provided as one of the security functions for self-programming. It disables writing to and erasing areas outside the range specified as a window only during self-programming.

The window range can be set by specifying the start and end blocks. The window range can be set or changed during both serial programming and self-programming.

Writing to and erasing areas outside the window range are disabled during self-programming. During serial programming, however, areas outside the range specified as a window can be written and erased.

Figure 33 - 11 Flash Shield Window Setting Example
(Target Devices: R5F11BLE, Start Block: 04H, End Block: 06H)

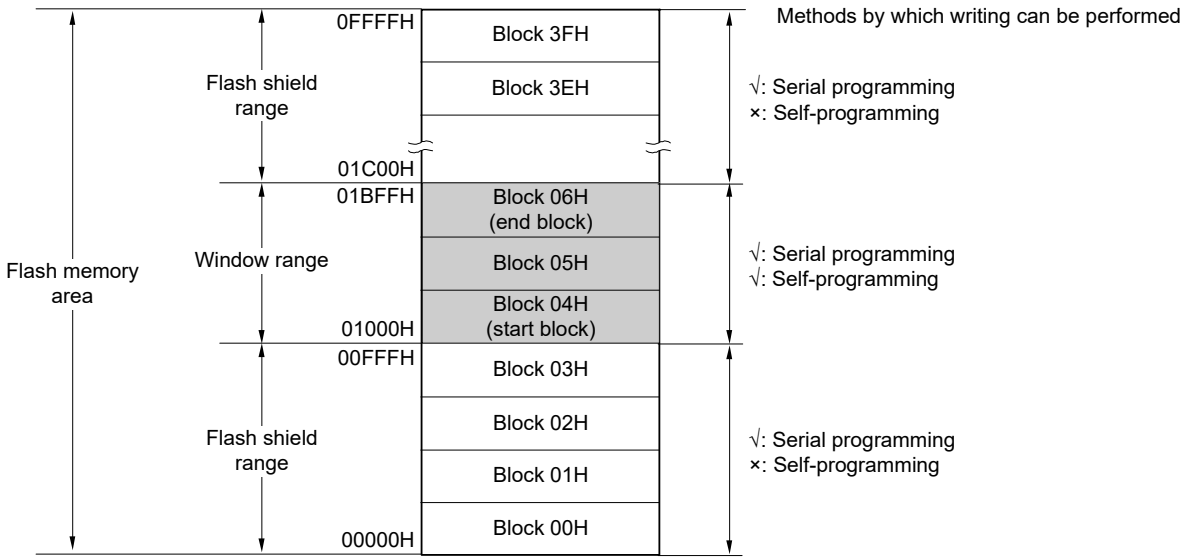

Caution 1. If the rewrite-prohibited area of the boot cluster 0 overlaps with the flash shield window range, prohibition to rewrite the boot cluster 0 takes priority.

Caution 2. The flash shield window can only be used for the code flash memory (and is not supported for the data flash memory).

Table 33 - 11 Relationship between Flash Shield Window Function Setting/Change Methods and Commands

Programming conditions	Window Range Setting/ Change Methods	Execution Commands	
		Block erase	Write
Self-programming	Specify the starting and ending blocks by the flash self-programming library.	Block erasing is enabled only within the window range.	Writing is enabled only within the range of window range.
Serial programming	Specify the starting and ending blocks on GUI of dedicated flash memory programmer, etc.	Block erasing is enabled also outside the window range.	Writing is enabled also outside the window range.

Remark See **33.7 Security Settings** to prohibit writing/erasing during serial programming.

33.7 Security Settings

The RL78 microcontroller supports a security function that prohibits rewriting the user program written to the internal flash memory, so that the program cannot be changed by an unauthorized person.
The operations shown below can be performed using the Security Set command.

- Disabling block erase
  Execution of the block erase command for a specific block in the flash memory is prohibited during serial programming. However, blocks can be erased by means of self-programming.

- Disabling write
  Execution of the write command for entire blocks in the flash memory is prohibited during serial programming. However, blocks can be written by means of self-programming.
  After the setting of prohibition of writing is specified, releasing the setting by the Security Release command is enabled by a reset.

- Disabling rewriting boot cluster 0
  Execution of the block erase command and write command on boot cluster 0 (00000H to 00FFFH) in the flash memory is prohibited by this setting.

The block erase, write commands, and rewriting boot cluster 0 are enabled by the default setting when the flash memory is shipped. Security can be set by serial programming and self-programming. Each security setting can be used in combination.
Table 33 - 12 shows the relationship between the erase and write commands when the RL78 microcontroller security function is enabled.
After the security settings are specified, releasing the security settings by the Security Release command is enabled by a reset.

Caution **The security function of the flash programmer does not support self-programming.**

Remark To prohibit writing and erasing during self-programming, use the flash shield window function (see **33.6.3** for detail).

Table 33 - 12 Relationship Between Enabling Security Function and Command

(1) During serial programming

Valid Security	Executed Command	
	Block Erase	Write
Prohibition of block erase	Blocks cannot be erased.	Can be performed. Note
Prohibition of writing	Blocks can be erased.	Cannot be performed.
Prohibition of rewriting boot cluster 0	Boot cluster 0 cannot be erased.	Boot cluster 0 cannot be written.

Note Confirm that no data has been written to the write area. Because data cannot be erased after block erase is prohibited, do not write data if the data has not been erased.

(2) During self-programming

Valid Security	Executed Command	
	Block Erase	Write
Prohibition of block erase	Blocks can be erased.	Can be performed.
Prohibition of writing		
Prohibition of rewriting boot cluster 0	Boot cluster 0 cannot be erased.	Boot cluster 0 cannot be written.

Remark To prohibit writing and erasing during self-programming, use the flash shield window function (see **33.6.3** for detail).

Table 33 - 13 Setting Security in Each Programming Mode

(1) During serial programming

Security	Security Setting	How to Disable Security Setting
Prohibition of block erase	Set via GUI of dedicated flash memory programmer, etc.	Cannot be disabled after set.
Prohibition of writing		Set via GUI of dedicated flash memory programmer, etc.
Prohibition of rewriting boot cluster 0		Cannot be disabled after set.

Caution **Releasing the setting of prohibition of writing is enabled only when the security is not set as the block erase prohibition and the boot cluster 0 rewrite prohibition with code flash memory area and data flash memory area being blanks.**

(2) During self-programming

Security	Security Setting	How to Disable Security Setting
Prohibition of block erase	Set by using flash self-programming library.	Cannot be disabled after set.
Prohibition of writing		Cannot be disabled during self-programming (set via GUI of dedicated flash memory programmer, etc. during serial programming).
Prohibition of rewriting boot cluster 0		Cannot be disabled after set.

33.8 Data Flash

33.8.1 Data flash overview

An overview of the data flash memory is provided below.

- The user program can rewrite the data flash memory by using the flash data library. For details, refer to RL78 Family Flash Data Library User's Manual.
- The data flash memory can also be rewritten to through serial programming using the dedicated flash memory programmer or an external device.
- The data flash can be erased in 1-block (1 KB) units.
- The data flash can be accessed only in 8-bit units.
- The data flash can be directly read by CPU instructions.
- Instructions can be executed from the code flash memory while rewriting the data flash memory (that is, background operation (BGO) is supported).
- Because the data flash memory is an area exclusively used for data, it cannot be used to execute instructions.
- Accessing the data flash memory is not possible while rewriting the code flash memory (during self-programming).
- Manipulating the DFLCTL register is not possible while rewriting the data flash memory.
- Transition to the STOP mode is not possible while rewriting the data flash memory.

Caution 1. The data flash memory is stopped after a reset is canceled. The data flash control register (DFLCTL) must be set up in order to use the data flash memory.

Caution 2. The high-speed on-chip oscillator should be kept operating during data flash rewrite. If it is kept stopped, it should be operated (HIOSTOP = 0). The flash self-programming library should be executed after 30 μs have elapsed when the FRQSEL4 in the user option byte (000C2H) is 0, and after 80 μs have elapsed when the FRQSEL4 is 1.

Remark For the flash programming mode, see **33.6 Self-Programming**.

33.8.2 Register controlling data flash memory

33.8.2.1 Data flash control register (DFLCTL)

This register is used to enable or disable accessing to the data flash.

The DFLCTL register is set by a 1-bit or 8-bit memory manipulation instruction.

Reset input sets this register to 00H.

Figure 33 - 12 Format of Data flash control register (DFLCTL)

Address: F0090H After reset: 00H R/W

Symbol	7	6	5	4	3	2	1	<0>
DFLCTL	0	0	0	0	0	0	0	DFLEN

DFLEN	Data flash access control
0	Disables data flash access
1	Enables data flash access

Caution Manipulating the DFLCTL register is not possible while rewriting the data flash memory.

33.8.3 Procedure for accessing data flash memory

The data flash memory is initially stopped after a reset ends and cannot be accessed (read or programmed). To access the memory, perform the following procedure:

<1> Write 1 to bit 0 (DFLEN) of the data flash control register (DFLCTL).
<2> Wait for the setup to finish for software timer, etc.
The time setup takes differs for each main clock mode.
<Setup time for each main clock mode>
- HS (High-speed main): 5 μs
- LS (Low-speed main): 720 ns
- LV (Low-voltage main): 10 μs

<3> After the wait, the data flash memory can be accessed.

Caution 1. Accessing the data flash memory is not possible during the setup time.
Caution 2. Transition to the STOP mode is not possible during the setup time. To enter the STOP mode during the setup time, clear DFLEN to 0 and then execute the STOP instruction.
Caution 3. The high-speed on-chip oscillator should be kept operating during data flash rewrite. If it is kept stopped, it should be operated (HIOSTOP = 0). The flash self-programming library should be executed after 30 μs have elapsed when the FRQSEL4 in the user option byte (000C2H) is 0, and after 80 μs have elapsed when the FRQSEL4 is 1.

CHAPTER 34 ON-CHIP DEBUG FUNCTION

34.1 Connecting E1 On-chip Debugging Emulator

The RL78 microcontroller uses the V_{DD}, $\overline{RESET}$, TOOL0, and V_{SS} pins to communicate with the host machine via an E1 on-chip debugging emulator. Serial communication is performed by using a single-line UART that uses the TOOL0 pin.

Caution The RL78 microcontroller has an on-chip debug function, which is provided for development and evaluation. Do not use the on-chip debug function in products designated for mass production, because the guaranteed number of rewritable times of the flash memory may be exceeded when this function is used, and product reliability therefore cannot be guaranteed. Renesas Electronics is not liable for problems occurring when the on-chip debug function is used.

Figure 34 - 1 Connection Example of E1 On-chip Debugging Emulator

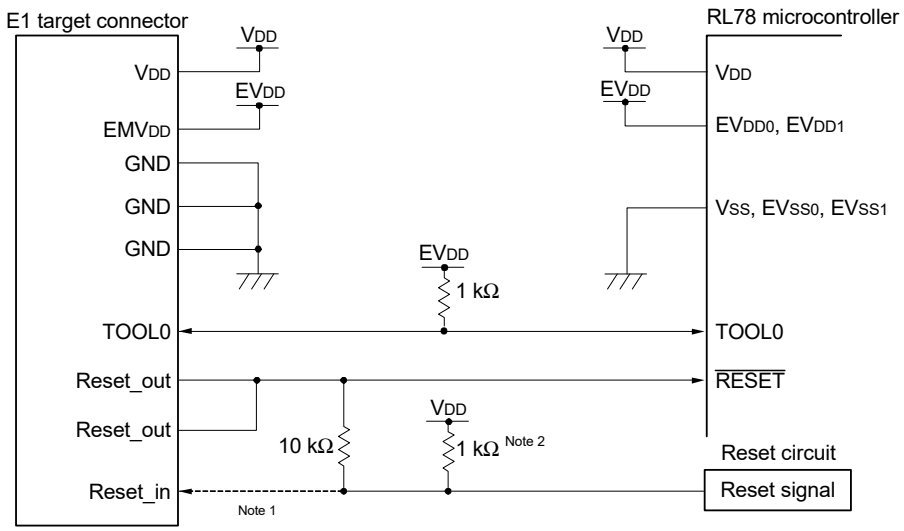

Note 1. Connecting the dotted line is not necessary during serial programming.

Note 2. If the reset circuit on the target system does not have a buffer and generates a reset signal only with resistors and capacitors, this pull-up resistor is not necessary.

Caution This circuit diagram is assumed that the reset signal outputs from an N-ch O.D. buffer (output resistor: 100 Ω or less)

Remark With products not provided with an EV_{DD0} and EV_{SS0} pin, replace EV_{DD0} with V_{DD}, or replace EV_{SS0} with V_{SS}.

34.2 On-Chip Debug Security ID

The RL78 microcontroller has an on-chip debug operation control bit in the flash memory at 000C3H (see **CHAPTER 32 OPTION BYTE**) and an on-chip debug security ID setting area at 000C4H to 000CDH, to prevent third parties from reading memory content.

When the boot swap function is used, also set a value that is the same as that of 010C3H and 010C4H to 010CDH in advance, because 000C3H, 000C4H to 000CDH and 010C3H, and 010C4H to 010CDH are switched.

Table 34 - 1 On-Chip Debug Security ID

Address	On-Chip Debug Security ID
000C4H to 000CDH	Any ID code of 10 bytes[Note]
010C4H to 010CDH	

Note The setting FFFFFFFFFFFFFFFFFFFFH for the ID code is not possible.

34.3 Securing of User Resources

To perform communication between the RL78 microcontroller and E1 on-chip debugging emulator, as well as each debug function, the securing of memory space must be done beforehand.

If Renesas Electronics assembler or compiler is used, the items can be set by using link options.

(1) Securement of memory space

The shaded portions in Figure 34 - 2 are the areas reserved for placing the debug monitor program, so user programs or data cannot be allocated in these spaces. When using the on-chip debug function, these spaces must be secured so as not to be used by the user program. Moreover, this area must not be rewritten by the user program.

Figure 34 - 2 Memory Spaces Where Debug Monitor Programs Are Allocated

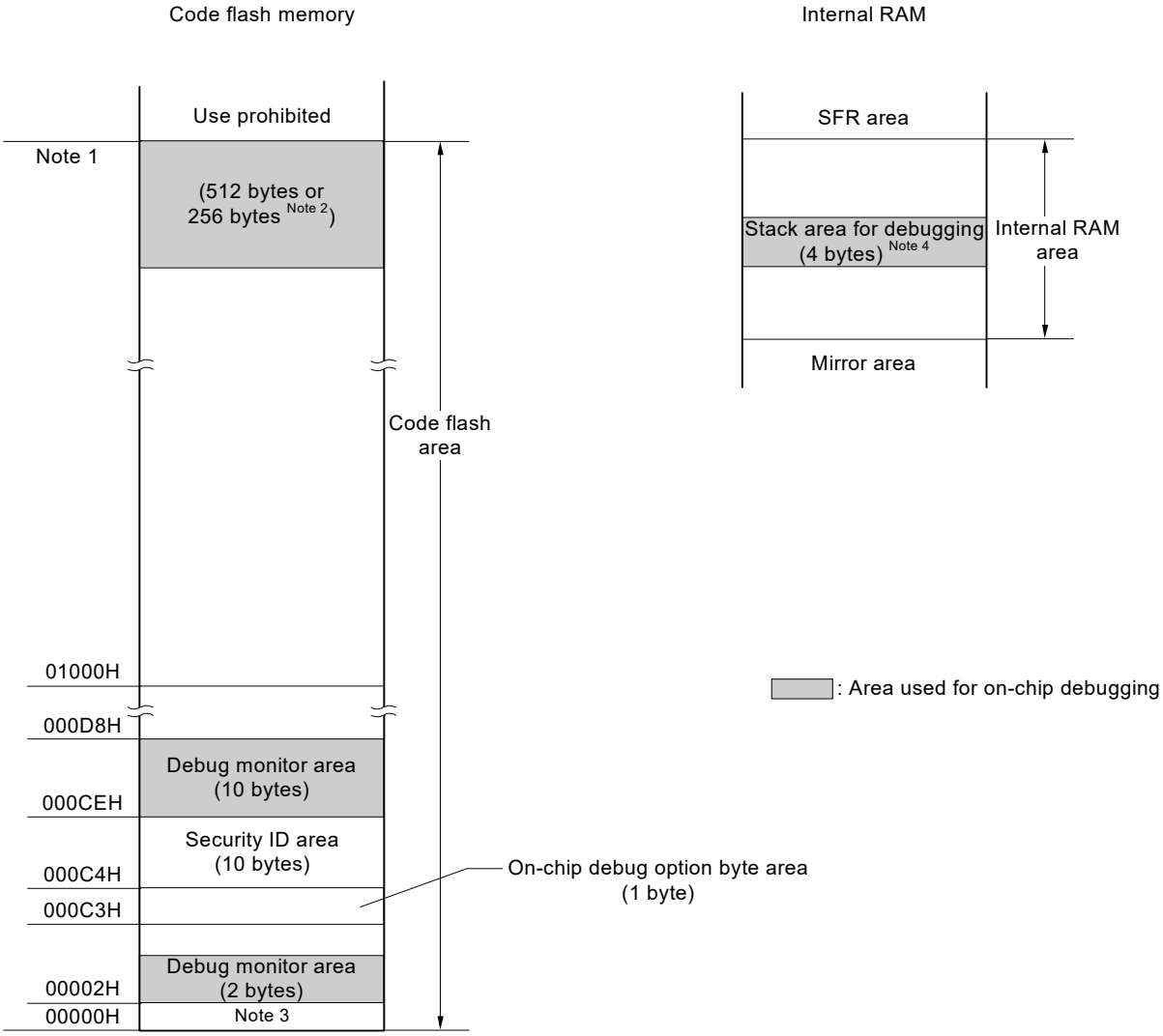

Note 1. Address differs depending on products as follows.

Products (code flash memory capacity)	Address of **Note 1.**
R5F11B7C,R5F11BBC,R5F11BCC,R5F11BGC,R5F11BLC	07FFFH
R5F11B7E,R5F11BBE,R5F11BCE,R5F11BGE,R5F11BLE	0FFFFH

Note 2. When real-time RAM monitor (RRM) function and dynamic memory modification (DMM) function are not used, it is 256 bytes.

Note 3. In debugging, reset vector is rewritten to address allocated to a monitor program.

Note 4. Since this area is allocated immediately before the stack area, the address of this area varies depending on the stack increase and decrease. That is, 4 extra bytes are consumed for the stack area used.
When using self-programming, 12 extra bytes are consumed for the stack area used.

CHAPTER 35 BCD CORRECTION CIRCUIT

35.1 BCD Correction Circuit Function

The result of addition/subtraction of the BCD (binary-coded decimal) code and BCD code can be obtained as BCD code with this circuit.

The decimal correction operation result is obtained by performing addition/subtraction having the A register as the operand and then adding/ subtracting the BCD correction result register (BCDADJ).

35.2 Registers Used by BCD Correction Circuit

The BCD correction circuit uses the following registers.

• BCD correction result register (BCDADJ)

35.2.1 BCD correction result register (BCDADJ)

The BCDADJ register stores correction values for obtaining the add/subtract result as BCD code through add/subtract instructions using the A register as the operand.

The value read from the BCDADJ register varies depending on the value of the A register when it is read and those of the CY and AC flags.

The BCDADJ register is read by an 8-bit memory manipulation instruction.

Reset input sets this register to undefined.

Figure 35 - 1 Format of BCD correction result register (BCDADJ)

Address: F00FEH After reset: Undefined R

Symbol	7	6	5	4	3	2	1	0
BCDADJ								

35.3 BCD Correction Circuit Operation

The basic operation of the BCD correction circuit is as follows.

(1) Addition: Calculating the result of adding a BCD code value and another BCD code value by using a BCD code value

<1> The BCD code value to which addition is performed is stored in the A register.

<2> By adding the value of the A register and the second operand (value of one more BCD code to be added) as are in binary, the binary operation result is stored in the A register and the correction value is stored in the BCD correction result register (BCDADJ).

<3> Decimal correction is performed by adding in binary the value of the A register (addition result in binary) and the BCDADJ register (correction value), and the correction result is stored in the A register and CY flag.

Caution The value read from the BCDADJ register varies depending on the value of the A register when it is read and those of the CY and AC flags. Therefore, execute the instruction <3> after the instruction <2> instead of executing any other instructions. To perform BCD correction in the interrupt enabled state, saving and restoring the A register is required within the interrupt function. PSW (CY flag and AC flag) is restored by the RETI instruction.

An example is shown below.

Examples 1: 99 + 89 = 188

Instruction			A Register	CY Flag	AC Flag	BCDADJ Register
MOV	A, #99H	; <1>	99H	—	—	—
ADD	A, #89H	; <2>	22H	1	1	66H
ADD	A, !BCDADJ	; <3>	88H	1	0	—

Examples 2: 85 + 15 = 100

Instruction			A Register	CY Flag	AC Flag	BCDADJ Register
MOV	A, #85H	; <1>	85H	—	—	—
ADD	A, #15H	; <2>	9AH	0	0	66H
ADD	A, !BCDADJ	; <3>	00H	1	1	—

Examples 3: 80 + 80 = 160

Instruction			A Register	CY Flag	AC Flag	BCDADJ Register
MOV	A, #80H	; <1>	80H	—	—	—
ADD	A, #80H	; <2>	00H	1	0	60H
ADD	A, !BCDADJ	; <3>	60H	1	0	—

(2) Subtraction: Calculating the result of subtracting a BCD code value from another BCD code value by using a BCD code value

<1> The BCD code value from which subtraction is performed is stored in the A register.

<2> By subtracting the value of the second operand (value of BCD code to be subtracted) from the A register as is in binary, the calculation result in binary is stored in the A register, and the correction value is stored in the BCD correction result register (BCDADJ).

<3> Decimal correction is performed by subtracting the value of the BCDADJ register (correction value) from the A register (subtraction result in binary) in binary, and the correction result is stored in the A register and CY flag.

Caution The value read from the BCDADJ register varies depending on the value of the A register when it is read and those of the CY and AC flags. Therefore, execute the instruction <3> after the instruction <2> instead of executing any other instructions. To perform BCD correction in the interrupt enabled state, saving and restoring the A register is required within the interrupt function. PSW (CY flag and AC flag) is restored by the RETI instruction.

An example is shown below.

Example: 91 - 52 = 39

Instruction			A Register	CY Flag	AC Flag	BCDADJ Register
MOV	A, #91H	; <1>	91H	—	—	—
SUB	A, #52H	; <2>	3FH	0	1	06H
SUB	A, !BCDADJ	; <3>	39H	0	0	—

CHAPTER 36 INSTRUCTION SET

This chapter lists the instructions in the RL78 microcontroller instruction set. For details of each operation and operation code, refer to the separate document **RL78 Family User's Manual Software (R01US0015)**.

36.1 Conventions Used in Operation List

36.1.1 Operand identifiers and specification methods

Operands are described in the “Operand” column of each instruction in accordance with the description method of the instruction operand identifier (refer to the assembler specifications for details). When there are two or more description methods, select one of them. Alphabetic letters in capitals and the symbols, #, !, !!, $, $!, [ ], and ES: are keywords and are described as they are. Each symbol has the following meaning.

- #: Immediate data specification
- !: 16-bit absolute address specification
- !!: 20-bit absolute address specification
- $: 8-bit relative address specification
- $!: 16-bit relative address specification
- [ ]: Indirect address specification
- ES:: Extension address specification

In the case of immediate data, describe an appropriate numeric value or a label. When using a label, be sure to describe the #, !, !!, $, $!, [ ], and ES: symbols.
For operand register identifiers, r and rp, either function names (X, A, C, etc.) or absolute names (names in parentheses in the table below, R0, R1, R2, etc.) can be used for description.

Table 36 - 1 Operand Identifiers and Specification Methods

Identifier	Description Method
r rp sfr sfrp	X (R0), A (R1), C (R2), B (R3), E (R4), D (R5), L (R6), H (R7) AX (RP0), BC (RP1), DE (RP2), HL (RP3) Special-function register symbol (SFR symbol) FFF00H to FFFFFH Special-function register symbols (16-bit manipulatable SFR symbol. Even addresses only Note) FFF00H to FFFFFH
saddr saddrp	FFE20H to FFF1FH Immediate data or labels FFE20H to FF1FH Immediate data or labels (even addresses only Note)
addr20 addr16 addr5	00000H to FFFFFH Immediate data or labels 0000H to FFFFH Immediate data or labels (only even addresses for 16-bit data transfer instructions Note) 0080H to 00BFH Immediate data or labels (even addresses only)
word byte bit	16-bit immediate data or label 8-bit immediate data or label 3-bit immediate data or label
RBn	RB0 to RB3

Note Bit 0 = 0 when an odd address is specified.

Remark The special function registers can be described to operand sfr as symbols. See **Tables 3 - 6** to **3 - 9 Special Function Register (SFR) List** for the symbols of the special function registers. The extended special function registers can be described to operand !addr16 as symbols. See **Tables 3 - 10** to **3 - 17 Extended Special Function Register (2nd SFR) List** for the symbols of the extended special function registers.

36.1.2 Description of operation column

The operation when the instruction is executed is shown in the “Operation” column using the following symbols.

Table 36 - 2 Symbols in “Operation” Column

Symbol	Function
A	A register; 8-bit accumulator
X	X register
B	B register
C	C register
D	D register
E	E register
H	H register
L	L register
ES	ES register
CS	CS register
AX	AX register pair; 16-bit accumulator
BC	BC register pair
DE	DE register pair
HL	HL register pair
PC	Program counter
SP	Stack pointer
PSW	Program status word
CY	Carry flag
AC	Auxiliary carry flag
Z	Zero flag
RBS	Register bank select flag
IE	Interrupt request enable flag
()	Memory contents indicated by address or register contents in parentheses
X_H, X_L X_S, X_H, X_L	16-bit registers: X_H = higher 8 bits, X_L = lower 8 bits 20-bit registers: X_S = (bits 19 to 16), X_H = (bits 15 to 8), X_L = (bits 7 to 0)
∧	Logical product (AND)
∨	Logical sum (OR)
⊻	Exclusive logical sum (exclusive OR)
—	Inverted data
addr5	16-bit immediate data (even addresses only in 0080H to 00BFH)
addr16	16-bit immediate data
addr20	20-bit immediate data
jdisp8	Signed 8-bit data (displacement value)
jdisp16	Signed 16-bit data (displacement value)

36.1.3 Description of flag operation column

The change of the flag value when the instruction is executed is shown in the “Flag” column using the following symbols.

Table 36 - 3 Symbols in “Flag” Column

Symbol	Change of Flag Value
(Blank)	Unchanged
0	Cleared to 0
1	Set to 1
×	Set/cleared according to the result
R	Previously saved value is restored

36.1.4 PREFIX instruction

Instructions with “ES:” have a PREFIX operation code as a prefix to extend the accessible data area to the 1 MB space (00000H to FFFFFH), by adding the ES register value to the 64 KB space from F0000H to FFFFFH. When a PREFIX operation code is attached as a prefix to the target instruction, only one instruction immediately after the PREFIX operation code is executed as the addresses with the ES register value added.

A interrupt and DTC transfer are not acknowledged between a PREFIX instruction code and the instruction immediately after.

Table 36 - 4 Use Example of PREFIX Operation Code

Instruction	Opcode				
	1	2	3	4	5
MOV !addr16, #byte	CFH	!addr16		#byte	—
MOV ES:!addr16, #byte	11H	CFH	!addr16		#byte
MOV A, [HL]	8BH	—	—	—	—
MOV A, ES: [HL]	11H	8BH	—	—	—

Caution Set the ES register value with MOV ES, A, etc., before executing the PREFIX instruction.

36.2 Operation List

Table 36 - 5 Operation List (1/18)

Instruction Group	Mnemonic	Operands	Bytes	Clocks		Clocks	Flag		
				Note 1	Note 2		Z	AC	CY
8-bit data transfer	MOV	r, #byte	2	1	—	r ← byte			
		PSW, #byte	3	3	—	PSW ← byte	×	×	×
		CS, #byte	3	1	—	CS ← byte			
		ES, #byte	2	1	—	ES ← byte			
		!addr16, #byte	4	1	—	(addr16) ← byte			
		ES:!addr16, #byte	5	2	—	(ES, addr16) ← byte			
		saddr, #byte	3	1	—	(saddr) ← byte			
		sfr, #byte	3	1	—	sfr ← byte			
		[DE+byte], #byte	3	1	—	(DE + byte) ← byte			
		ES:[DE+byte], #byte	4	2	—	((ES, DE) + byte) ← byte			
		[HL+byte], #byte	3	1	—	(HL + byte) ← byte			
		ES:[HL+byte], #byte	4	2	—	((ES, HL) + byte) ← byte			
		[SP+byte], #byte	3	1	—	(SP + byte) ← byte			
		word[B], #byte	4	1	—	(B + word) ← byte			
		ES:word[B], #byte	5	2	—	((ES, B) + word) ← byte			
		word[C], #byte	4	1	—	(C+word) ← byte			
		ES:word[C], #byte	5	2	—	((ES, C) + word) ← byte			
		word[BC], #byte	4	1	—	(BC+word) ← byte			
		ES:word[BC], #byte	5	2	—	((ES, BC) + word) ← byte			
		A, r Note 3	1	1	—	A ← r			
		r, A Note 3	1	1	—	r ← A			
		A, PSW	2	1	—	A ← PSW			
		PSW, A	2	3	—	PSW ← A	×	×	×
		A, CS	2	1	—	A ← CS			
		CS, A	2	1	—	CS ← A			
		A, ES	2	1	—	A ← ES			
		ES, A	2	1	—	ES ← A			
		A, !addr16	3	1	4	A ← (addr16)			
		A, ES:!addr16	4	2	5	A ← (ES, addr16)			
		!addr16, A	3	1	—	(addr16) ← A			
		ES:!addr16, A	4	2	—	(ES, addr16) ← A			
		A, saddr	2	1	—	A ← (saddr)			
		saddr, A	2	1	—	(saddr) ← A			

Note 1. Number of CPU clocks (f_{CLK}) when the internal RAM area, SFR area, or extended SFR area is accessed, or when no data is accessed.

Note 2. Number of CPU clocks (f_{CLK}) when the code flash memory is accessed, or when the data flash memory is accessed by an 8-bit instruction.

Note 3. Except r = A

Remark Number of clock is when program exists in the internal ROM (flash memory) area. If fetching the instruction from the internal RAM area, the number becomes double number plus 3 clocks at a maximum.

Table 36 - 6 Operation List (2/18)

Instruction Group	Mnemonic	Operands	Bytes	Clocks		Clocks	Flag		
				Note 1	Note 2		Z	AC	CY
8-bit data transfer	MOV	A, sfr	2	1	—	A ← sfr			
		sfr, A	2	1	—	sfr ← A			
		A, [DE]	1	1	4	A ← (DE)			
		[DE], A	1	1	—	(DE) ← A			
		A, ES:[DE]	2	2	5	A ← (ES, DE)			
		ES:[DE], A	2	2	—	(ES, DE) ← A			
		A, [HL]	1	1	4	A ← (HL)			
		[HL], A	1	1	—	(HL) ← A			
		A, ES:[HL]	2	2	5	A ← (ES, HL)			
		ES:[HL], A	2	2	—	(ES, HL) ← A			
		A, [DE+byte]	2	1	4	A ← (DE + byte)			
		[DE+byte], A	2	1	—	(DE + byte) ← A			
		A, ES:[DE+byte]	3	2	5	A ← ((ES, DE) + byte)			
		ES:[DE+byte], A	3	2	—	((ES, DE) + byte ← A			
		A, [HL+byte]	2	1	4	A ← (HL + byte)			
		[HL+byte], A	2	1	—	(HL + byte) ← A			
		A, ES:[HL+byte]	3	2	5	A ← ((ES, HL) + byte)			
		ES:[HL+byte], A	3	2	—	((ES, HL) + byte) ← A			
		A, [SP+byte]	2	1	—	A ← (SP + byte)			
		[SP+byte], A	2	1	—	(SP + byte) ← A			
		A, word[B]	3	1	4	A ← (B + word)			
		word[B], A	3	1	—	(B + word) ← A			
		A, ES:word[B]	4	2	5	A ← ((ES, B) + word)			
		ES:word[B], A	4	2	—	((ES, B) + word) ← A			
		A, word[C]	3	1	4	A ← (C + word)			
		word[C], A	3	1	—	(C + word) ← A			
		A, ES:word[C]	4	2	5	A ← ((ES, C) + word)			
		ES:word[C], A	4	2	—	((ES, C) + word) ← A			
		A, word[BC]	3	1	4	A ← (BC + word)			
		word[BC], A	3	1	—	(BC + word) ← A			
		A, ES:word[BC]	4	2	5	A ← ((ES, BC) + word)			
		ES:word[BC], A	4	2	—	((ES, BC) + word) ← A			

Note 1. Number of CPU clocks (f_{CLK}) when the internal RAM area, SFR area, or extended SFR area is accessed, or when no data is accessed.

Note 2. Number of CPU clocks (f_{CLK}) when the code flash memory is accessed, or when the data flash memory is accessed by an 8-bit instruction.

Remark Number of clock is when program exists in the internal ROM (flash memory) area. If fetching the instruction from the internal RAM area, the number becomes double number plus 3 clocks at a maximum.

Table 36 - 7 Operation List (3/18)

Instruction Group	Mnemonic	Operands	Bytes	Clocks		Clocks	Flag		
				Note 1	Note 2		Z	AC	CY
8-bit data transfer	MOV	A, [HL+B]	2	1	4	A ← (HL + B)			
		[HL+B], A	2	1	—	(HL + B) ← A			
		A, ES:[HL+B]	3	2	5	A ← ((ES, HL) + B)			
		ES:[HL+B], A	3	2	—	((ES, HL) + B) ← A			
		A, [HL+C]	2	1	4	A ← (HL + C)			
		[HL+C], A	2	1	—	(HL + C) ← A			
		A, ES:[HL+C]	3	2	5	A ← ((ES, HL) + C)			
		ES:[HL+C], A	3	2	—	((ES, HL) + C) ← A			
		X, !addr16	3	1	4	X ← (addr16)			
		X, ES:!addr16	4	2	5	X ← (ES, addr16)			
		X, saddr	2	1	—	X ← (saddr)			
		B, !addr16	3	1	4	B ← (addr16)			
		B, ES:!addr16	4	2	5	B ← (ES, addr16)			
		B, saddr	2	1	—	B ← (saddr)			
		C, !addr16	3	1	4	C ← (addr16)			
		C, ES:!addr16	4	2	5	C ← (ES, addr16)			
		C, saddr	2	1	—	C ← (saddr)			
		ES, saddr	3	1	—	ES ← (saddr)			
	XCH	A, r Note 3	1 (r = X) 2 (other than r = X)	1	—	A ←→ r			
		A, !addr16	4	2	—	A ←→ (addr16)			
		A, ES:!addr16	5	3	—	A ←→ (ES, addr16)			
		A, saddr	3	2	—	A ←→ (saddr)			
		A, sfr	3	2	—	A ←→ sfr			
		A, [DE]	2	2	—	A ←→ (DE)			
		A, ES:[DE]	3	3	—	A ←→ (ES, DE)			
		A, [HL]	2	2	—	A ←→ (HL)			
		A, ES:[HL]	3	3	—	A ←→ (ES, HL)			
		A, [DE+byte]	3	2	—	A ←→ (DE + byte)			
		A, ES:[DE+byte]	4	3	—	A ←→ ((ES, DE) + byte)			
		A, [HL+byte]	3	2	—	A ←→ (HL + byte)			
		A, ES:[HL+byte]	4	3	—	A ←→ ((ES, HL) + byte)			

Note 1. Number of CPU clocks (f_{CLK}) when the internal RAM area, SFR area, or extended SFR area is accessed, or when no data is accessed.

Note 2. Number of CPU clocks (f_{CLK}) when the code flash memory is accessed, or when the data flash memory is accessed by an 8-bit instruction.

Note 3. Except r = A

Remark Number of clock is when program exists in the internal ROM (flash memory) area. If fetching the instruction from the internal RAM area, the number becomes double number plus 3 clocks at a maximum.

Table 36 - 8 Operation List (4/18)

Instruction Group	Mnemonic	Operands	Bytes	Clocks		Clocks	Flag		
				Note 1	Note 2		Z	AC	CY
8-bit data transfer	XCH	A, [HL+B]	2	2	—	A ←→ (HL + B)			
		A, ES:[HL+B]	3	3	—	A ←→ ((ES, HL) + B)			
		A, [HL+C]	2	2	—	A ←→ (HL + C)			
		A, ES:[HL+C]	3	3	—	A ←→ ((ES, HL) + C)			
	ONEB	A	1	1	—	A ← 01H			
		X	1	1	—	X ← 01H			
		B	1	1	—	B ← 01H			
		C	1	1	—	C ← 01H			
		!addr16	3	1	—	(addr16) ← 01H			
		ES:!addr16	4	2	—	(ES, addr16) ← 01H			
		saddr	2	1	—	(saddr) ← 01H			
	CLRB	A	1	1	—	A ← 00H			
		X	1	1	—	X ← 00H			
		B	1	1	—	B ← 00H			
		C	1	1	—	C ← 00H			
		!addr16	3	1	—	(addr16) ← 00H			
		ES:!addr16	4	2	—	(ES,addr16) ← 00H			
		saddr	2	1	—	(saddr) ← 00H			
	MOVS	[HL+byte], X	3	1	—	(HL + byte) ← X	×		×
		ES:[HL+byte], X	4	2	—	(ES, HL + byte) ← X	×		×
16-bit data transfer	MOVW	rp, #word	3	1	—	rp ← word			
		saddrp, #word	4	1	—	(saddrp) ← word			
		sfrp, #word	4	1	—	sfrp ← word			
		AX, rp Note 3	1	1	—	AX ← rp			
		rp, AX Note 3	1	1	—	rp ← AX			
		AX, !addr16	3	1	4	AX ← (addr16)			
		!addr16, AX	3	1	—	(addr16) ← AX			
		AX, ES:!addr16	4	2	5	AX ← (ES, addr16)			
		ES:!addr16, AX	4	2	—	(ES, addr16) ← AX			
		AX, saddrp	2	1	—	AX ← (saddrp)			
		saddrp, AX	2	1	—	(saddrp) ← AX			
		AX, sfrp	2	1	—	AX ← sfrp			
		sfrp, AX	2	1	—	sfrp ← AX			

Note 1. Number of CPU clocks (f_{CLK}) when the internal RAM area, SFR area, or extended SFR area is accessed, or when no data is accessed.

Note 2. Number of CPU clocks (f_{CLK}) when the code flash memory is accessed, or when the data flash memory is accessed by an 8-bit instruction.

Note 3. Except rp = AX

Remark Number of clock is when program exists in the internal ROM (flash memory) area. If fetching the instruction from the internal RAM area, the number becomes double number plus 3 clocks at a maximum.

Table 36 - 9 Operation List (5/18)

Instruction Group	Mnemonic	Operands	Bytes	Clocks		Clocks	Flag		
				Note 1	Note 2		Z	AC	CY
16-bit data transfer	MOVW	AX, [DE]	1	1	4	AX ← (DE)			
		[DE], AX	1	1	—	(DE) ← AX			
		AX, ES:[DE]	2	2	5	AX ← (ES, DE)			
		ES:[DE], AX	2	2	—	(ES, DE) ← AX			
		AX, [HL]	1	1	4	AX ← (HL)			
		[HL], AX	1	1	—	(HL) ← AX			
		AX, ES:[HL]	2	2	5	AX ← (ES, HL)			
		ES:[HL], AX	2	2	—	(ES, HL) ← AX			
		AX, [DE+byte]	2	1	4	AX ← (DE + byte)			
		[DE+byte], AX	2	1	—	(DE + byte) ← AX			
		AX, ES:[DE+byte]	3	2	5	AX ← ((ES, DE) + byte)			
		ES:[DE+byte], AX	3	2	—	((ES, DE) + byte) ← AX			
		AX, [HL+byte]	2	1	4	AX ← (HL + byte)			
		[HL+byte], AX	2	1	—	(HL + byte) ← AX			
		AX, ES:[HL+byte]	3	2	5	AX ← ((ES, HL) + byte)			
		ES:[HL+byte], AX	3	2	—	((ES, HL) + byte) ← AX			
		AX, [SP+byte]	2	1	—	AX ← (SP + byte)			
		[SP+byte], AX	2	1	—	(SP + byte) ← AX			
		AX, word[B]	3	1	4	AX ← (B + word)			
		word[B], AX	3	1	—	(B + word) ← AX			
		AX, ES:word[B]	4	2	5	AX ← ((ES, B) + word)			
		ES:word[B], AX	4	2	—	((ES, B) + word) ← AX			
		AX, word[C]	3	1	4	AX ← (C + word)			
		word[C], AX	3	1	—	(C + word) ← AX			
		AX, ES:word[C]	4	2	5	AX ← ((ES, C) + word)			
		ES:word[C], AX	4	2	—	((ES, C) + word) ← AX			
		AX, word[BC]	3	1	4	AX ← (BC + word)			
		word[BC], AX	3	1	—	(BC + word) ← AX			
		AX, ES:word[BC]	4	2	5	AX ← ((ES, BC) + word)			
		ES:word[BC], AX	4	2	—	((ES, BC) + word) ← AX			

Note 1. Number of CPU clocks (f_{CLK}) when the internal RAM area, SFR area, or extended SFR area is accessed, or when no data is accessed.

Note 2. Number of CPU clocks (f_{CLK}) when the code flash memory is accessed, or when the data flash memory is accessed by an 8-bit instruction.

Remark Number of clock is when program exists in the internal ROM (flash memory) area. If fetching the instruction from the internal RAM area, the number becomes double number plus 3 clocks at a maximum.

Table 36 - 10 Operation List (6/18)

Instruction Group	Mnemonic	Operands	Bytes	Clocks		Clocks	Flag		
				Note 1	Note 2		Z	AC	CY
16-bit data transfer	MOVW	BC, !addr16	3	1	4	BC ← (addr16)			
		BC, ES:!addr16	4	2	5	BC ← (ES, addr16)			
		DE, !addr16	3	1	4	DE ← (addr16)			
		DE, ES:!addr16	4	2	5	DE ← (ES, addr16)			
		HL, !addr16	3	1	4	HL ← (addr16)			
		HL, ES:!addr16	4	2	5	HL ← (ES, addr16)			
		BC, saddrp	2	1	—	BC ← (saddrp)			
		DE, saddrp	2	1	—	DE ← (saddrp)			
		HL, saddrp	2	1	—	HL ← (saddrp)			
	XCHW	AX, rp Note 3	1	1	—	AX ←→ rp			
	ONEW	AX	1	1	—	AX ← 0001H			
		BC	1	1	—	BC ← 0001H			
	CLRW	AX	1	1	—	AX ← 0000H			
		BC	1	1	—	BC ← 0000H			
8-bit operation	ADD	A, #byte	2	1	—	A, CY ← A + byte	×	×	×
		saddr, #byte	3	2	—	(saddr), CY ← (saddr) + byte	×	×	×
		A, r Note 4	2	1	—	A, CY ← A + r	×	×	×
		r, A	2	1	—	r, CY ← r + A	×	×	×
		A, !addr16	3	1	4	A, CY ← A + (addr16)	×	×	×
		A, ES:!addr16	4	2	5	A, CY ← A + (ES, addr16)	×	×	×
		A, saddr	2	1	—	A, C ← A + (saddr)	×	×	×
		A, [HL]	1	1	4	A, CY ← A + (HL)	×	×	×
		A, ES:[HL]	2	2	5	A,CY ← A + (ES, HL)	×	×	×
		A, [HL+byte]	2	1	4	A, CY ← A + (HL + byte)	×	×	×
		A, ES:[HL+byte]	3	2	5	A,CY ← A + ((ES, HL) + byte)	×	×	×
		A, [HL+B]	2	1	4	A, CY ← A + (HL + B)	×	×	×
		A, ES:[HL+B]	3	2	5	A,CY ← A + ((ES, HL) + B)	×	×	×
		A, [HL+C]	2	1	4	A, CY ← A + (HL + C)	×	×	×
		A, ES:[HL+C]	3	2	5	A,CY ← A + ((ES, HL) + C)	×	×	×

Note 1. Number of CPU clocks (f_{CLK}) when the internal RAM area, SFR area, or extended SFR area is accessed, or when no data is accessed.

Note 2. Number of CPU clocks (f_{CLK}) when the code flash memory is accessed, or when the data flash memory is accessed by an 8-bit instruction.

Note 3. Except rp = AX

Note 4. Except r = A

Remark Number of clock is when program exists in the internal ROM (flash memory) area. If fetching the instruction from the internal RAM area, the number becomes double number plus 3 clocks at a maximum.

Table 36 - 11 Operation List (7/18)

Instruction Group	Mnemonic	Operands	Bytes	Clocks		Clocks	Flag		
				Note 1	Note 2		Z	AC	CY
8-bit operation	ADDC	A, #byte	2	1	—	A, CY ← A + byte + CY	×	×	×
		saddr, #byte	3	2	—	(saddr), CY ← (saddr) + byte + CY	×	×	×
		A, rv Note 3	2	1	—	A, CY ← A + r + CY	×	×	×
		r, A	2	1	—	r, CY ← r + A + CY	×	×	×
		A, !addr16	3	1	4	A, CY ← A + (addr16) + CY	×	×	×
		A, ES:!addr16	4	2	5	A, CY ← A + (ES, addr16) + CY	×	×	×
		A, saddr	2	1	—	A, CY ← A + (saddr) + CY	×	×	×
		A, [HL]	1	1	4	A, CY ← A + (HL) + CY	×	×	×
		A, ES:[HL]	2	2	5	A,CY ← A + (ES, HL) + CY	×	×	×
		A, [HL+byte]	2	1	4	A, CY ← A + (HL + byte) + CY	×	×	×
		A, ES:[HL+byte]	3	2	5	A,CY ← A + ((ES, HL) + byte) + CY	×	×	×
		A, [HL+B]	2	1	4	A, CY ← A + (HL + B) + CY	×	×	×
		A, ES:[HL+B]	3	2	5	A,CY ← A + ((ES, HL) + B) + CY	×	×	×
		A, [HL+C]	2	1	4	A, CY ← A + (HL + C) + CY	×	×	×
		A, ES:[HL+C]	3	2	5	A,CY ← A + ((ES, HL) + C) + CY	×	×	×
	SUB	A, #byte	2	1	—	A, CY ← A - byte	×	×	×
		saddr, #byte	3	2	—	(saddr), CY ← (saddr) - byte	×	×	×
		A, r Note 3	2	1	—	A, CY ← A - r	×	×	×
		r, A	2	1	—	r, CY ← r - A	×	×	×
		A, !addr16	3	1	4	A, CY ← A - (addr16)	×	×	×
		A, ES:!addr16	4	2	5	A, CY ← A - (ES, addr16)	×	×	×
		A, saddr	2	1	—	A, CY ← A - (saddr)	×	×	×
		A, [HL]	1	1	4	A, CY ← A - (HL)	×	×	×
		A, ES:[HL]	2	2	5	A,CY ← A - (ES, HL)	×	×	×
		A, [HL+byte]	2	1	4	A, CY ← A - (HL + byte)	×	×	×
		A, ES:[HL+byte]	3	2	5	A,CY ← A - ((ES, HL) + byte)	×	×	×
		A, [HL+B]	2	1	4	A, CY ← A - (HL + B)	×	×	×
		A, ES:[HL+B]	3	2	5	A,CY ← A - ((ES, HL) + B)	×	×	×
		A, [HL+C]	2	1	4	A, CY ← A - (HL + C)	×	×	×
		A, ES:[HL+C]	3	2	5	A,CY ← A - ((ES, HL) + C)	×	×	×

Note 1. Number of CPU clocks (f_{CLK}) when the internal RAM area, SFR area, or extended SFR area is accessed, or when no data is accessed.

Note 2. Number of CPU clocks (f_{CLK}) when the code flash memory is accessed, or when the data flash memory is accessed by an 8-bit instruction.

Note 3. Except r = A

Remark Number of clock is when program exists in the internal ROM (flash memory) area. If fetching the instruction from the internal RAM area, the number becomes double number plus 3 clocks at a maximum.

Table 36 - 12 Operation List (8/18)

Instruction Group	Mnemonic	Operands	Bytes	Clocks		Clocks	Flag		
				Note 1	Note 2		Z	AC	CY
8-bit operation	SUBC	A, #byte	2	1	—	A, CY ← A - byte - CY	×	×	×
		saddr, #byte	3	2	—	(saddr), CY ← (saddr) - byte - CY	×	×	×
		A, r Note 3	2	1	—	A, CY ← A - r - CY	×	×	×
		r, A	2	1	—	r, CY ← r - A - CY	×	×	×
		A, !addr16	3	1	4	A, CY ← A - (addr16) - CY	×	×	×
		A, ES:!addr16	4	2	5	A, CY ← A - (ES, addr16) - CY	×	×	×
		A, saddr	2	1	—	A, CY ← A - (saddr) - CY	×	×	×
		A, [HL]	1	1	4	A, CY ← A - (HL) - CY	×	×	×
		A, ES:[HL]	2	2	5	A,CY ← A - (ES, HL) - CY	×	×	×
		A, [HL+byte]	2	1	4	A, CY ← A - (HL + byte) - CY	×	×	×
		A, ES:[HL+byte]	3	2	5	A,CY ← A - ((ES, HL) + byte) - CY	×	×	×
		A, [HL+B]	2	1	4	A, CY ← A - (HL + B) - CY	×	×	×
		A, ES:[HL+B]	3	2	5	A,CY ← A - ((ES, HL) + B) - CY	×	×	×
		A, [HL+C]	2	1	4	A, CY ← A - (HL + C) - CY	×	×	×
		A, ES:[HL+C]	3	2	5	A, CY ← A - ((ES:HL) + C) - CY	×	×	×
	AND	A, #byte	2	1	—	A ← A ∧ byte	×		
		saddr, #byte	3	2	—	(saddr) ← (saddr) ∧ byte	×		
		A, r Note 3	2	1	—	A ← A ∧ r	×		
		r, A	2	1	—	R ← r ∧ A	×		
		A, !addr16	3	1	4	A ← A ∧ (addr16)	×		
		A, ES:!addr16	4	2	5	A ← A ∧ (ES:addr16)	×		
		A, saddr	2	1	—	A ← A ∧ (saddr)	×		
		A, [HL]	1	1	4	A ← A ∧ (HL)	×		
		A, ES:[HL]	2	2	5	A ← A ∧ (ES:HL)	×		
		A, [HL+byte]	2	1	4	A ← A ∧ (HL + byte)	×		
		A, ES:[HL+byte]	3	2	5	A ← A ∧ ((ES:HL) + byte)	×		
		A, [HL+B]	2	1	4	A ← A ∧ (HL + B)	×		
		A, ES:[HL+B]	3	2	5	A ← A ∧ ((ES:HL) + B)	×		
		A, [HL+C]	2	1	4	A ← A ∧ (HL + C)	×		
		A, ES:[HL+C]	3	2	5	A ← A ∧ ((ES:HL) + C)	×		

Note 1. Number of CPU clocks (f_{CLK}) when the internal RAM area, SFR area, or extended SFR area is accessed, or when no data is accessed.

Note 2. Number of CPU clocks (f_{CLK}) when the code flash memory is accessed, or when the data flash memory is accessed by an 8-bit instruction.

Note 3. Except r = A

Remark Number of clock is when program exists in the internal ROM (flash memory) area. If fetching the instruction from the internal RAM area, the number becomes double number plus 3 clocks at a maximum.

Table 36 - 13 Operation List (9/18)

Instruction Group	Mnemonic	Operands	Bytes	Clocks		Clocks	Flag		
				Note 1	Note 2		Z	AC	CY
8-bit operation	OR	A, #byte	2	1	—	A ← A ∨ byte	×		
		saddr, #byte	3	2	—	(saddr) ← (saddr) ∨ byte	×		
		A, r Note 3	2	1	—	A ← A ∨ r	×		
		r, A	2	1	—	r ← r ∨ A	×		
		A, !addr16	3	1	4	A ← A ∨ (addr16)	×		
		A, ES:!addr16	4	2	5	A ← A ∨ (ES:addr16)	×		
		A, saddr	2	1	—	A ← A ∨ (saddr)	×		
		A, [HL]	1	1	4	A ← A ∨ (HL)	×		
		A, ES:[HL]	2	2	5	A ← A ∨ (ES:HL)	×		
		A, [HL+byte]	2	1	4	A ← A ∨ (HL + byte)	×		
		A, ES:[HL+byte]	3	2	5	A ← A ∨ ((ES:HL) + byte)	×		
		A, [HL+B]	2	1	4	A ← A ∨ (HL + B)	×		
		A, ES:[HL+B]	3	2	5	A ← A ∨ ((ES:HL) + B)	×		
		A, [HL+C]	2	1	4	A ← A ∨ (HL + C)	×		
		A, ES:[HL+C]	3	2	5	A ← A ∨ ((ES:HL) + C)	×		
	XOR	A, #byte	2	1	—	A ← A ∨̸ byte	×		
		saddr, #byte	3	2	—	(saddr) ← (saddr) ∨̸ byte	×		
		A, r Note 3	2	1	—	A ← A ∨̸ r	×		
		r, A	2	1	—	r ← r ∨̸ A	×		
		A, !addr16	3	1	4	A ← A ∨̸ (addr16)	×		
		A, ES:!addr16	4	2	5	A ← A ∨̸ (ES:addr16)	×		
		A, saddr	2	1	—	A ← A ∨̸ (saddr)	×		
		A, [HL]	1	1	4	A ← A ∨̸ (HL)	×		
		A, ES:[HL]	2	2	5	A ← A ∨̸ (ES:HL)	×		
		A, [HL+byte]	2	1	4	A ← A ∨̸ (HL + byte)	×		
		A, ES:[HL+byte]	3	2	5	A ← A ∨̸ ((ES:HL) + byte)	×		
		A, [HL+B]	2	1	4	A ← A ∨̸ (HL + B)	×		
		A, ES:[HL+B]	3	2	5	A ← A ∨̸ ((ES:HL) + B)	×		
		A, [HL+C]	2	1	4	A ← A ∨̸ (HL + C)	×		
		A, ES:[HL+C]	3	2	5	A ← A ∨̸ ((ES:HL) + C)	×		

Note 1. Number of CPU clocks (f_{CLK}) when the internal RAM area, SFR area, or extended SFR area is accessed, or when no data is accessed.

Note 2. Number of CPU clocks (f_{CLK}) when the code flash memory is accessed, or when the data flash memory is accessed by an 8-bit instruction.

Note 3. Except r = A

Remark Number of clock is when program exists in the internal ROM (flash memory) area. If fetching the instruction from the internal RAM area, the number becomes double number plus 3 clocks at a maximum.

Table 36 - 14 Operation List (10/18)

Instruction Group	Mnemonic	Operands	Bytes	Clocks		Clocks	Flag		
				Note 1	Note 2		Z	AC	CY
8-bit operation	CMP	A, #byte	2	1	—	A - byte	×	×	×
		!addr16, #byte	4	1	4	(addr16) - byte	×	×	×
		ES:!addr16, #byte	5	2	5	(ES:addr16) - byte	×	×	×
		saddr, #byte	3	1	—	(saddr) - byte	×	×	×
		A, r Note 3	2	1	—	A - r	×	×	×
		r, A	2	1	—	r - A	×	×	×
		A, !addr16	3	1	4	A - (addr16)	×	×	×
		A, ES:!addr16	4	2	5	A - (ES:addr16)	×	×	×
		A, saddr	2	1	—	A - (saddr)	×	×	×
		A, [HL]	1	1	4	A - (HL)	×	×	×
		A, ES:[HL]	2	2	5	A - (ES:HL)	×	×	×
		A, [HL+byte]	2	1	4	A - (HL + byte)	×	×	×
		A, ES:[HL+byte]	3	2	5	A - ((ES:HL) + byte)	×	×	×
		A, [HL+B]	2	1	4	A - (HL + B)	×	×	×
		A, ES:[HL+B]	3	2	5	A - ((ES:HL) + B)	×	×	×
		A, [HL+C]	2	1	4	A - (HL + C)	×	×	×
		A, ES:[HL+C]	3	2	5	A - ((ES:HL) + C)	×	×	×
	CMP0	A	1	1	—	A - 00H	×	0	0
		X	1	1	—	X - 00H	×	0	0
		B	1	1	—	B - 00H	×	0	0
		C	1	1	—	C - 00H	×	0	0
		!addr16	3	1	4	(addr16) - 00H	×	0	0
		ES:!addr16	4	2	5	(ES:addr16) - 00H	×	0	0
		saddr	2	1	—	(saddr) - 00H	×	0	0
	CMPS	X, [HL+byte]	3	1	4	X - (HL + byte)	×	×	×
		X, ES:[HL+byte]	4	2	5	X - ((ES:HL) + byte)	×	×	×

Note 1. Number of CPU clocks (f_{CLK}) when the internal RAM area, SFR area, or extended SFR area is accessed, or when no data is accessed.

Note 2. Number of CPU clocks (f_{CLK}) when the code flash memory is accessed, or when the data flash memory is accessed by an 8-bit instruction.

Note 3. Except r = A

Remark Number of clock is when program exists in the internal ROM (flash memory) area. If fetching the instruction from the internal RAM area, the number becomes double number plus 3 clocks at a maximum.

Table 36 - 15 Operation List (11/18)

Instruction Group	Mnemonic	Operands	Bytes	Clocks		Clocks	Flag		
				Note 1	Note 2		Z	AC	CY
16-bit operation	ADDW	AX, #word	3	1	—	AX, CY ← AX + word	×	×	×
		AX, AX	1	1	—	AX, CY ← AX + AX	×	×	×
		AX, BC	1	1	—	AX, CY ← AX + BC	×	×	×
		AX, DE	1	1	—	AX, CY ← AX + DE	×	×	×
		AX, HL	1	1	—	AX, CY ← AX + HL	×	×	×
		AX, !addr16	3	1	4	AX, CY ← AX + (addr16)	×	×	×
		AX, ES:!addr16	4	2	5	AX, CY ← AX + (ES:addr16)	×	×	×
		AX, saddrp	2	1	—	AX, CY ← AX + (saddrp)	×	×	×
		AX, [HL+byte]	3	1	4	AX, CY ← AX + (HL + byte)	×	×	×
		AX, ES: [HL+byte]	4	2	5	AX, CY ← AX + ((ES:HL) + byte)	×	×	×
	SUBW	AX, #word	3	1	—	AX, CY ← AX - word	×	×	×
		AX, BC	1	1	—	AX, CY ← AX - BC	×	×	×
		AX, DE	1	1	—	AX, CY ← AX - DE	×	×	×
		AX, HL	1	1	—	AX, CY ← AX - HL	×	×	×
		AX, !addr16	3	1	4	AX, CY ← AX - (addr16)	×	×	×
		AX, ES:!addr16	4	2	5	AX, CY ← AX - (ES:addr16)	×	×	×
		AX, saddrp	2	1	—	AX, CY ← AX - (saddrp)	×	×	×
		AX, [HL+byte]	3	1	4	AX, CY ← AX - (HL + byte)	×	×	×
		AX, ES: [HL+byte]	4	2	5	AX, CY ← AX - ((ES:HL) + byte)	×	×	×
	CMPW	AX, #word	3	1	—	AX - word	×	×	×
		AX, BC	1	1	—	AX - BC	×	×	×
		AX, DE	1	1	—	AX - DE	×	×	×
		AX, HL	1	1	—	AX - HL	×	×	×
		AX, !addr16	3	1	4	AX - (addr16)	×	×	×
		AX, ES:!addr16	4	2	5	AX - (ES:addr16)	×	×	×
		AX, saddrp	2	1	—	AX - (saddrp)	×	×	×
		AX, [HL+byte]	3	1	4	AX - (HL + byte)	×	×	×
		AX, ES: [HL+byte]	4	2	5	AX - ((ES:HL) + byte)	×	×	×
Multiply	MULU	X	1	1	—	AX ← A × X			

Note 1. Number of CPU clocks (f_{CLK}) when the internal RAM area, SFR area, or extended SFR area is accessed, or when no data is accessed.

Note 2. Number of CPU clocks (f_{CLK}) when the code flash memory is accessed, or when the data flash memory is accessed by an 8-bit instruction.

Remark Number of clock is when program exists in the internal ROM (flash memory) area. If fetching the instruction from the internal RAM area, the number becomes double number plus 3 clocks at a maximum.

Table 36 - 16 Operation List (12/18)

Instruction Group	Mnemonic	Operands	Bytes	Clocks		Clocks	Flag		
				Note 1	Note 2		Z	AC	CY
Multiply, Divide, Multiply & accumulate	MULU	X	1	1	—	AX ← A × X			
	MULHU		3	2	—	BCAX ← AX × BC (unsigned)			
	MULH		3	2	—	BCAX ← AX × BC (signed)			
	DIVHU		3	9	—	AX (quotient), DE (remainder) ← AX ÷ DE (unsigned)			
	DIVWU		3	17	—	BCAX (quotient), HLDE (remainder) ← BCAX ÷ HLDE (unsigned)			
	MACHU		3	3	—	MACR ← MACR + AX × BC (unsigned)		×	×
	MACH		3	3	—	MACR ← MACR + AX × BC(signed)		×	×

Note 1. Number of CPU clocks (f_{CLK}) when the internal RAM area, SFR area, or extended SFR area is accessed, or when no data is accessed.

Note 2. Number of CPU clocks (f_{CLK}) when the code flash memory is accessed, or when the data flash memory is accessed by an 8-bit instruction.

Caution **Disable interrupts when executing the DIVHU or DIVWU instruction in an interrupt servicing routine. Alternatively, unless they are executed in the RAM area, note that execution of a DIVHU or DIVWU instruction is possible even with interrupts enabled as long as a NOP instruction is added immediately after the DIVHU or DIVWU instruction in the assembly language source code. The following compilers automatically add a NOP instruction immediately after any DIVHU or DIVWU instruction output during the build process.**

- **V. 1.71 and later versions of the CA78K0R (Renesas Electronics compiler), for both C and assembly language source code**
- **Service pack 1.40.6 and later versions of the EWRL78 (IAR compiler), for C language source code**
- **GNURL78 (KPIT compiler), for C language source code**

Remark 1. Number of clock is when program exists in the internal ROM (flash memory) area. If fetching the instruction from the internal RAM area, the number becomes double number plus 3 clocks at a maximum.

Remark 2. MACR indicates the multiplication and accumulation register (MACRH, MACRL).

Table 36 - 17 Operation List (13/18)

Instruction Group	Mnemonic	Operands	Bytes	Clocks		Clocks	Flag		
				Note 1	Note 2		Z	AC	CY
Increment/ decrement	INC	r	1	1	—	r ← r + 1	×	×	
		!addr16	3	2	—	(addr16) ← (addr16) + 1	×	×	
		ES:!addr16	4	3	—	(ES, addr16) ← (ES, addr16) + 1	×	×	
		saddr	2	2	—	(saddr) ← (saddr) + 1	×	×	
		[HL+byte]	3	2	—	(HL + byte) ← (HL + byte) + 1	×	×	
		ES: [HL+byte]	4	3	—	((ES:HL) + byte) ← ((ES:HL) + byte) + 1	×	×	
	DEC	r	1	1	—	r ← r - 1	×	×	
		!addr16	3	2	—	(addr16) ← (addr16) - 1	×	×	
		ES:!addr16	4	3	—	(ES, addr16) ← (ES, addr16) - 1	×	×	
		saddr	2	2	—	(saddr) ← (saddr) - 1	×	×	
		[HL+byte]	3	2	—	(HL + byte) ← (HL + byte) - 1	×	×	
		ES: [HL+byte]	4	3	—	((ES:HL) + byte) ← ((ES:HL) + byte) - 1	×	×	
	INCW	rp	1	1	—	rp ← rp + 1			
		!addr16	3	2	—	(addr16) ← (addr16) + 1			
		ES:!addr16	4	3	—	(ES, addr16) ← (ES, addr16) + 1			
		saddrp	2	2	—	(saddrp) ← (saddrp) + 1			
		[HL+byte]	3	2	—	(HL + byte) ← (HL + byte) + 1			
		ES: [HL+byte]	4	3	—	((ES:HL) + byte) ← ((ES:HL) + byte) + 1			
	DECW	rp	1	1	—	rp ← rp - 1			
		!addr16	3	2	—	(addr16) ← (addr16) - 1			
		ES:!addr16	4	3	—	(ES, addr16) ← (ES, addr16) - 1			
		saddrp	2	2	—	(saddrp) ← (saddrp) - 1			
		[HL+byte]	3	2	—	(HL + byte) ← (HL + byte) - 1			
		ES: [HL+byte]	4	3	—	((ES:HL) + byte) ← ((ES:HL) + byte) - 1			
Shift	SHR	A, cnt	2	1	—	(CY ← A_0, A_{m-1} ← A_m, A_7 ← 0) × cnt			×
	SHRW	AX, cnt	2	1	—	(CY ← AX_0, AX_{m-1} ← AX_m, AX_{15} ← 0) × cnt			×
	SHL	A, cnt	2	1	—	(CY ← A_7, A_m ← A_{m-1}, A_0 ← 0) × cnt			×
		B, cnt	2	1	—	(CY ← B_7, B_m ← B_{m-1}, B_0 ← 0) × cnt			×
		C, cnt	2	1	—	(CY ← C_7, C_m ← C_{m-1}, C_0 ← 0) × cnt			×
	SHLW	AX, cnt	2	1	—	(CY ← AX_{15}, AX_m ← AX_{m-1}, AX_0 ← 0) × cnt			×
		BC, cnt	2	1	—	(CY ← BC_{15}, BC_m ← BC_{m-1}, BC_0 ← 0) × cnt			×
	SAR	A, cnt	2	1	—	(CY ← A_0, A_{m-1} ← A_m, A_7 ← A_7) × cnt			×
	SARW	AX, cnt	2	1	—	(CY ← AX_0, AX_{m-1} ← AX_m, AX_{15} ← AX_{15}) × cnt			×

Note 1. Number of CPU clocks (f_{CLK}) when the internal RAM area, SFR area, or extended SFR area is accessed, or when no data is accessed.

Note 2. Number of CPU clocks (f_{CLK}) when the code flash memory is accessed, or when the data flash memory is accessed by an 8-bit instruction.

Remark 1. Number of clock is when program exists in the internal ROM (flash memory) area. If fetching the instruction from the internal RAM area, the number becomes double number plus 3 clocks at a maximum.

Remark 2. cnt indicates the bit shift count.

Table 36 - 18 Operation List (14/18)

Instruction Group	Mnemonic	Operands	Bytes	Clocks		Clocks	Flag		
				Note 1	Note 2		Z	AC	CY
Rotate	ROR	A, 1	2	1	—	(CY, $A_7 \leftarrow A_0$, $A_{m-1} \leftarrow A_m$) × 1			×
	ROL	A, 1	2	1	—	(CY, $A_0 \leftarrow A_7$, $A_{m+1} \leftarrow A_m$) × 1			×
	RORC	A, 1	2	1	—	(CY ← A_0, A_7 ← CY, $A_{m-1} \leftarrow A_m$) × 1			×
	ROLC	A, 1	2	1	—	(CY ← A_7, A_0 ← CY, $A_{m+1} \leftarrow A_m$) × 1			×
	ROLWC	AX,1	2	1	—	(CY ← AX_{15}, AX_0 ← CY, $AX_{m+1} \leftarrow AX_m$) × 1			×
		BC,1	2	1	—	(CY ← BC_{15}, BC_0 ← CY, $BC_{m+1} \leftarrow BC_m$) × 1			×
Bit manipulate	MOV1	CY, A.bit	2	1	—	CY ← A.bit			×
		A.bit, CY	2	1	—	A.bit ← CY			
		CY, PSW.bit	3	1	—	CY ← PSW.bit			×
		PSW.bit, CY	3	4	—	PSW.bit ← CY	×	×	
		CY, saddr.bit	3	1	—	CY ← (saddr).bit			×
		saddr.bit, CY	3	2	—	(saddr).bit ← CY			
		CY, sfr.bit	3	1	—	CY ← sfr.bit			×
		sfr.bit, CY	3	2	—	sfr.bit ← CY			
		CY,[HL].bit	2	1	4	CY ← (HL).bit			×
		[HL].bit, CY	2	2	—	(HL).bit ← CY			
		CY, ES:[HL].bit	3	2	5	CY ← (ES, HL).bit			×
		ES:[HL].bit, CY	3	3	—	(ES, HL).bit ← CY			
	AND1	CY, A.bit	2	1	—	CY ← CY ∧ A.bit			×
		CY, PSW.bit	3	1	—	CY ← CY ∧ PSW.bit			×
		CY, saddr.bit	3	1	—	CY ← CY ∧ (saddr).bit			×
		CY, sfr.bit	3	1	—	CY ← CY ∧ sfr.bit			×
		CY,[HL].bit	2	1	4	CY ← CY ∧ (HL).bit			×
		CY, ES:[HL].bit	3	2	5	CY ← CY ∧ (ES, HL).bit			×
	OR1	CY, A.bit	2	1	—	CY ← CY ∨ A.bit			×
		CY, PSW.bit	3	1	—	CY ← CY ∨ ∨ PSW.bit			×
		CY, saddr.bit	3	1	—	CY ← CY ∨ (saddr).bit			×
		CY, sfr.bit	3	1	—	CY ← CY ∨ sfr.bit			×
		CY, [HL].bit	2	1	4	CY ← CY ∨ (HL).bit			×
		CY, ES:[HL].bit	3	2	5	CY ← CY ∨ (ES, HL).bit			×

Note 1. Number of CPU clocks (f_{CLK}) when the internal RAM area, SFR area, or extended SFR area is accessed, or when no data is accessed.

Note 2. Number of CPU clocks (f_{CLK}) when the code flash memory is accessed, or when the data flash memory is accessed by an 8-bit instruction.

Remark Number of clock is when program exists in the internal ROM (flash memory) area. If fetching the instruction from the internal RAM area, the number becomes double number plus 3 clocks at a maximum.

Table 36 - 19 Operation List (15/18)

Instruction Group	Mnemonic	Operands	Bytes	Clocks		Clocks	Flag		
				Note 1	Note 2		Z	AC	CY
Bit manipulate	XOR1	CY, A.bit	2	1	—	CY ← CY ⊻ bit			×
		CY, PSW.bit	3	1	—	CY ← CY ⊻ PSW.bit			×
		CY, saddr.bit	3	1	—	CY ← CY ⊻ (saddr).bit			×
		CY, sfr.bit	3	1	—	CY ← CY ⊻ sfr.bit			×
		CY, [HL].bit	2	1	4	CY ← CY ⊻ (HL).bit			×
		CY, ES:[HL].bit	3	2	5	CY ← CY ⊻ (ES, HL).bit			×
	SET1	A.bit	2	1	—	A.bit ← 1			
		PSW.bit	3	4	—	PSW.bit ← 1	×	×	×
		!addr16.bit	4	2	—	(addr16).bit ← 1			
		ES:!addr16.bit	5	3	—	(ES, addr16).bit ← 1			
		saddr.bit	3	2	—	(saddr).bit ← 1			
		sfr.bit	3	2	—	sfr.bit ← 1			
		[HL].bit	2	2	—	(HL).bit ← 1			
		ES:[HL].bit	3	3	—	(ES, HL).bit ← 1			
	CLR1	A.bit	2	1	—	A.bit ← 0			
		PSW.bit	3	4	—	PSW.bit ← 0	×	×	×
		!addr16.bit	4	2	—	(addr16).bit ← 0			
		ES:!addr16.bit	5	3	—	(ES, addr16).bit ← 0			
		saddr.bit	3	2	—	(saddr.bit) ← 0			
		sfr.bit	3	2	—	sfr.bit ← 0			
		[HL].bit	2	2	—	(HL).bit ← 0			
		ES:[HL].bit	3	3	—	(ES, HL).bit ← 0			
	SET1	CY	2	1	—	CY ← 1			1
	CLR1	CY	2	1	—	CY ← 0			0
	NOT1	CY	2	1	—	CY ← $\overline{CY}$			×

Note 1. Number of CPU clocks (f_{CLK}) when the internal RAM area, SFR area, or extended SFR area is accessed, or when no data is accessed

Note 2. Number of CPU clocks (f_{CLK}) when the code flash memory is accessed, or when the data flash memory is accessed by an 8-bit instruction.

Remark Number of clock is when program exists in the internal ROM (flash memory) area. If fetching the instruction from the internal RAM area, the number becomes double number plus 3 clocks at a maximum.

Table 36 - 20 Operation List (16/18)

Instruction Group	Mnemonic	Operands	Bytes	Clocks		Clocks	Flag		
				Note 1	Note 2		Z	AC	CY
Call/return	CALL	rp	2	3	—	(SP - 2) ← $(PC + 2)_S$, (SP - 3) ← $(PC + 2)_H$, (SP - 4) ← $(PC + 2)_L$, PC ← CS, rp, SP ← SP - 4			
		$!addr20	3	3	—	(SP - 2) ← $(PC + 3)_S$, (SP - 3) ← $(PC + 3)_H$, (SP - 4) ← $(PC + 3)_L$, PC ← PC + 3 + jdisp16, SP ← SP - 4			
		!addr16	3	3	—	(SP - 2) ← $(PC + 3)_S$, (SP - 3) ← $(PC + 3)_H$, (SP - 4) ← $(PC + 3)_L$, PC ← 0000, addr16, SP ← SP - 4			
		!!addr20	4	3	—	(SP - 2) ← $(PC + 4)_S$, (SP - 3) ← $(PC + 4)_H$, (SP - 4) ← $(PC + 4)_L$, PC ← addr20, SP ← SP - 4			
	CALLT	[addr5]	2	5	—	(SP - 2) ← $(PC + 2)_S$, (SP - 3) ← $(PC + 2)_H$, (SP - 4) ← $(PC + 2)_L$, PC_S ← 0000, PC_H ← (0000, addr5 + 1), PC_L ← (0000, addr5), SP ← SP - 4			
	BRK	—	2	5	—	(SP - 1) ← PSW, (SP - 2) ← $(PC + 2)_S$, (SP - 3) ← $(PC + 2)_H$, (SP - 4) ← $(PC + 2)_L$, PC_S ← 0000, PC_H ← (0007FH), PC_L ← (0007EH), SP ← SP - 4, IE ← 0			
	RET	—	1	6	—	PC_L ← (SP), PC_H ← (SP + 1), PC_S ← (SP + 2), SP ← SP + 4			
	RETI	—	2	6	—	PC_L ← (SP), PC_H ← (SP + 1), PC_S ← (SP + 2), PSW ← (SP + 3), SP ← SP + 4	R	R	R
	RETB	—	2	6	—	PC_L ← (SP), PC_H ← (SP + 1), PC_S ← (SP + 2), PSW ← (SP + 3), SP ← SP + 4	R	R	R

Note 1. Number of CPU clocks (f_{CLK}) when the internal RAM area, SFR area, or extended SFR area is accessed, or when no data is accessed.

Note 2. Number of CPU clocks (f_{CLK}) when the code flash memory is accessed, or when the data flash memory is accessed by an 8-bit instruction.

Remark Number of clock is when program exists in the internal ROM (flash memory) area. If fetching the instruction from the internal RAM area, the number becomes double number plus 3 clocks at a maximum.

Table 36 - 21 Operation List (17/18)

Instruction Group	Mnemonic	Operands	Bytes	Clocks		Clocks	Flag		
				Note 1	Note 2		Z	AC	CY
Stack manipulate	PUSH	PSW	2	1	—	(SP - 1) ← PSW, (SP - 2) ← 00H, SP ← SP - 2			
		rp	1	1	—	(SP - 1) ← rp_H, (SP - 2) ← rp_L, SP ← SP - 2			
	POP	PSW	2	3	—	PSW ← (SP + 1), SP ← SP + 2	R	R	R
		rp	1	1	—	rp_L ← (SP), rp_H ← (SP + 1), SP ← SP + 2			
	MOVW	SP, #word	4	1	—	SP ← word			
		SP, AX	2	1	—	SP ← AX			
		AX, SP	2	1	—	AX ← SP			
		HL, SP	3	1	—	HL ← SP			
		BC, SP	3	1	—	BC ← SP			
		DE, SP	3	1	—	DE ← SP			
	ADDW	SP, #byte	2	1	—	SP ← SP + byte			
	SUBW	SP, #byte	2	1	—	SP ← SP - byte			
Unconditional branch	BR	AX	2	3	—	PC ← CS, AX			
		$addr20	2	3	—	PC ← PC + 2 + jdisp8			
		$!addr20	3	3	—	PC ← PC + 3 + jdisp16			
		!addr16	3	3	—	PC ← 0000, addr16			
		!!addr20	4	3	—	PC ← addr20			
Conditional branch	BC	$addr20	2	2/4 Note 3	—	PC ← PC + 2 + jdisp8 if CY = 1			
	BNC	$addr20	2	2/4 Note 3	—	PC ← PC + 2 + jdisp8 if CY = 0			
	BZ	$addr20	2	2/4 Note 3	—	PC ← PC + 2 + jdisp8 if Z = 1			
	BNZ	$addr20	2	2/4 Note 3	—	PC ← PC + 2 + jdisp8 if Z = 0			
	BH	$addr20	3	2/4 Note 3	—	PC ← PC + 3 + jdisp8 if (Z ∨ CY) = 0			
	BNH	$addr20	3	2/4 Note 3	—	PC ← PC + 3 + jdisp8 if (Z ∨ CY) = 1			
	BT	saddr.bit, $addr20	4	3/5 Note 3	—	PC ← PC + 4 + jdisp8 if (saddr).bit = 1			
		sfr.bit, $addr20	4	3/5 Note 3	—	PC ← PC + 4 + jdisp8 if sfr.bit = 1			
		A.bit, $addr20	3	3/5 Note 3	—	PC ← PC + 3 + jdisp8 if A.bit = 1			
		PSW.bit, $addr20	4	3/5 Note 3	—	PC ← PC + 4 + jdisp8 if PSW.bit = 1			
		[HL].bit, $addr20	3	3/5 Note 3	6/7	PC ← PC + 3 + jdisp8 if (HL).bit = 1			
		ES:[HL].bit, $addr20	4	4/6 Note 3	7/8	PC ← PC + 4 + jdisp8 if (ES, HL).bit = 1			

Note 1. Number of CPU clocks (f_{CLK}) when the internal RAM area, SFR area, or extended SFR area is accessed, or when no data is accessed.

Note 2. Number of CPU clocks (f_{CLK}) when the code flash memory is accessed, or when the data flash memory is accessed by an 8-bit instruction.

Note 3. This indicates the number of clocks “when condition is not met/when condition is met”.

Remark Number of clock is when program exists in the internal ROM (flash memory) area. If fetching the instruction from the internal RAM area, the number becomes double number plus 3 clocks at a maximum.

Table 36 - 22 Operation List (18/18)

Instruction Group	Mnemonic	Operands	Bytes	Clocks		Clocks	Flag		
				Note 1	Note 2		Z	AC	CY
Conditional branch	BF	saddr.bit, $addr20	4	3/5 Note 3	—	PC ← PC + 4 + jdisp8 if (saddr).bit = 0			
		sfr.bit, $addr20	4	3/5 Note 3	—	PC ← PC + 4 + jdisp8 if sfr.bit = 0			
		A.bit, $addr20	3	3/5 Note 3	—	PC ← PC + 3 + jdisp8 if A.bit = 0			
		PSW.bit, $addr20	4	3/5 Note 3	—	PC ← PC + 4 + jdisp8 if PSW.bit = 0			
		[HL].bit, $addr20	3	3/5 Note 3	6/7	PC ← PC + 3 + jdisp8 if (HL).bit = 0			
		ES:[HL].bit, $addr20	4	4/6 Note 3	7/8	PC ← PC + 4 + jdisp8 if (ES, HL).bit = 0			
	BTCLR	saddr.bit, $addr20	4	3/5 Note 3	—	PC ← PC + 4 + jdisp8 if (saddr).bit = 1 then reset (saddr).bit			
		sfr.bit, $addr20	4	3/5 Note 3	—	PC ← PC + 4 + jdisp8 if sfr.bit = 1 then reset sfr.bit			
		A.bit, $addr20	3	3/5 Note 3	—	PC ← PC + 3 + jdisp8 if A.bit = 1 then reset A.bit			
		PSW.bit, $addr20	4	3/5 Note 3	—	PC ← PC + 4 + jdisp8 if PSW.bit = 1 then reset PSW.bit	×	×	×
		[HL].bit, $addr20	3	3/5 Note 3	—	PC ← PC + 3 + jdisp8 if (HL).bit = 1 then reset (HL).bit			
		ES:[HL].bit, $addr20	4	4/6 Note 3	—	PC ← PC + 4 + jdisp8 if (ES, HL).bit = 1 then reset (ES, HL).bit			
Conditional skip	SKC	—	2	1	—	Next instruction skip if CY = 1			
	SKNC	—	2	1	—	Next instruction skip if CY = 0			
	SKZ	—	2	1	—	Next instruction skip if Z = 1			
	SKNZ	—	2	1	—	Next instruction skip if Z = 0			
	SKH	—	2	1	—	Next instruction skip if (Z ∨ CY) = 0			
	SKNH	—	2	1	—	Next instruction skip if (Z ∨ CY) = 1			
CPU control	SEL Note 4	RBn	2	1	—	RBS[1:0] ← n			
	NOP	—	1	1	—	No Operation			
	EI	—	3	4	—	IE ← 1 (Enable Interrupt)			
	DI	—	3	4	—	IE ← 0 (Disable Interrupt)			
	HALT	—	2	3	—	Set HALT Mode			
	STOP	—	2	3	—	Set STOP Mode			

Note 1. Number of CPU clocks (f_{CLK}) when the internal RAM area, SFR area, or extended SFR area is accessed, or when no data is accessed.

Note 2. Number of CPU clocks (f_{CLK}) when the code flash memory is accessed, or when the data flash memory is accessed by an 8-bit instruction.

Note 3. This indicates the number of clocks “when condition is not met/when condition is met”.

Note 4. n indicates the number of register banks (n = 0 to 3)

Remark Number of clock is when program exists in the internal ROM (flash memory) area. If fetching the instruction from the internal RAM area, the number becomes double number plus 3 clocks at a maximum.

CHAPTER 37 ELECTRICAL SPECIFICATIONS (T_A = -40 to +85°C)

This chapter describes the following electrical specifications.

Target products A: Consumer applications T_A = −40 to +85°C
R5F11BxxAxx
G: Industrial applications when T_A = −40 to +105°C products is used in the range of T_A = −40 to +85°C
R5F11BxxGxx

Caution 1. The RL78 microcontrollers have an on-chip debug function, which is provided for development and evaluation. Do not use the on-chip debug function in products designated for mass production, because the guaranteed number of rewritable times of the flash memory may be exceeded when this function is used, and product reliability therefore cannot be guaranteed. Renesas Electronics is not liable for problems occurring when the on-chip debug function is used.

Caution 2. With products not provided with an EV_{DD0}, EV_{SS0} pin, replace EV_{DD0} with V_{DD}, or replace EV_{SS0} with V_{SS}.

Caution 3. The pins mounted depend on the product. Refer to 2.1 Port Functions to 2.2.1 Functions for each product.

37.1 Absolute Maximum Ratings

Absolute Maximum Ratings **(1/2)**

Parameter	Symbols	Conditions	Ratings	Unit
Supply voltage	V_{DD}		-0.5 to +6.5	V
	EV_{DD0}		-0.5 to +6.5	V
REGC pin input voltage	V_{IREGC}	REGC	-0.3 to +2.8 and -0.3 to V_{DD} +0.3 Note 1	V
Input voltage	V_{I1}	P00 to P06, P10 to P17, P30, P31, P40 to P43, P50 to P55, P70 to P77, P120, P140, P141, P146, P147	-0.3 to EV_{DD0} +0.3 and -0.3 to V_{DD} +0.3 Note 2	V
	V_{I2}	P60 to P63 (N-ch open-drain)	-0.3 to +6.5	V
	V_{I3}	P20 to P27, P121 to P124, P137, EXCLK, EXCLKS, $\overline{\text{RESET}}$	-0.3 to V_{DD} +0.3 Note 2	V
Output voltage	V_{O1}	P00 to P06, P10 to P17, P30, P31, P40 to P43, P50 to P55, P60 to P63, P70 to P77, P120, P130, P140, P141, P146, P147	-0.3 to EV_{DD0} +0.3 and -0.3 to V_{DD} +0.3 Note 2	V
	V_{O2}	P20 to P27	-0.3 to V_{DD} +0.3 Note 2	V
Analog input voltage	V_{AI1}	ANI16 to ANI24	-0.3 to EV_{DD0} +0.3 and -0.3 to $AV_{REF}(+)$ +0.3 Notes 2, 3	V
	V_{AI2}	ANI0 to ANI7	-0.3 to V_{DD} +0.3 and -0.3 to $AV_{REF}(+)$ +0.3 Notes 2, 3	V

Note 1. Connect the REGC pin to V_{SS} via a capacitor (0.47 to 1 μF). This value regulates the absolute maximum rating of the REGC pin. Do not use this pin with voltage applied to it.

Note 2. Must be 6.5 V or lower.

Note 3. Do not exceed AV_{REF} (+) + 0.3 V in case of A/D conversion target pin.

Caution **Product quality may suffer if the absolute maximum rating is exceeded even momentarily for any parameter. That is, the absolute maximum ratings are rated values at which the product is on the verge of suffering physical damage, and therefore the product must be used under conditions that ensure that the absolute maximum ratings are not exceeded.**

Remark 1. Unless specified otherwise, the characteristics of alternate-function pins are the same as those of the port pins.

Remark 2. AV_{REF} (+): + side reference voltage of the A/D converter.

Remark 3. V_{SS}: Reference voltage

Absolute Maximum Ratings **(2/2)**

Parameter	Symbols	Conditions		Ratings	Unit
Output current, high	I_{OH1}	Per pin	P00 to P06, P10 to P17, P30, P31, P40 to P43, P50 to P55, P70 to P77, P120, P130, P140, P141, P146, P147	-40	mA
		Total of all pins -170 mA	P00 to P04, P40 to P43,P120, P130, P140, P141	-70	mA
			P05, P06, P10 to P17, P30, P31, P50 to P55, P70 to P77, P146, P147	-100	mA
	I_{OH2}	Per pin	P20 to P27	-0.5	mA
		Total of all pins		-2	mA
Output current, low	I_{OL1}	Per pin	P00 to P06, P10 to P17, P30, P31, P40-P43, P50 to P55, P60 to P63, P70 to P77, P120, P130, P140, P141, P146, P147	40	mA
		Total of all pins 170 mA	P00 to P04, P40 to P47, P120, P130, P140, P141	70	mA
			P05, P06, P10 to P17, P30, P31, P50 to P55, P70 to P77, P146, P147	100	mA
	I_{OL2}	Per pin	P20 to P27	1	mA
		Total of all pins		5	mA
Operating ambient temperature	T_A	In normal operation mode		-40 to +85	°C
		In flash memory programming mode			
Storage temperature	T_{stg}			-65 to +150	°C

Caution **Product quality may suffer if the absolute maximum rating is exceeded even momentarily for any parameter. That is, the absolute maximum ratings are rated values at which the product is on the verge of suffering physical damage, and therefore the product must be used under conditions that ensure that the absolute maximum ratings are not exceeded.**

Remark Unless specified otherwise, the characteristics of alternate-function pins are the same as those of the port pins.

37.2 Oscillator Characteristics

37.2.1 X1, XT1 characteristics

(T_A = -40 to +85°C, 1.6 V ≤ EV_{DD0} = V_{DD} ≤ 5.5 V, V_{SS} = 0 V)

Resonator	Resonator	Conditions	MIN.	TYP.	MAX.	Unit
X1 clock oscillation frequency (f_X) Note	Ceramic resonator/ crystal resonator	2.7 V ≤ V_{DD} ≤ 5.5 V	1.0		20.0	MHz
		2.4 V ≤ V_{DD} < 2.7 V	1.0		16.0	
		1.8 V ≤ V_{DD} < 2.4 V	1.0		8.0	
		1.6 V ≤ V_{DD} < 1.8 V	1.0		4.0	
XT1 clock oscillation frequency (f_{XT}) Note	Crystal resonator		32	32.768	35	kHz

Note Indicates only permissible oscillator frequency ranges. Refer to **AC Characteristics** for instruction execution time. Request evaluation by the manufacturer of the oscillator circuit mounted on a board to check the oscillator characteristics.

Caution **Since the CPU is started by the high-speed on-chip oscillator clock after a reset release, check the X1 clock oscillation stabilization time using the oscillation stabilization time counter status register (OSTC) by the user. Determine the oscillation stabilization time of the OSTC register and the oscillation stabilization time select register (OSTS) after sufficiently evaluating the oscillation stabilization time with the resonator to be used.**

Remark When using the X1 oscillator and XT1 oscillator, refer to **5.4 System Clock Oscillator**.

37.2.2 On-chip oscillator characteristics

(T_A = -40 to +85°C, 1.6 V ≤ EV_{DD0} = V_{DD} ≤ 5.5 V, V_{SS} = 0 V)

Oscillators	Parameters	Conditions		MIN.	TYP.	MAX.	Unit
High-speed on-chip oscillator clock frequency Notes 1, 2	f_{IH}	2.7 V ≤ V_{DD} ≤ 5.5 V		1		32	MHz
		2.4 V ≤ V_{DD} < 2.7 V		1		16	MHz
		1.8 V ≤ V_{DD} < 2.4 V		1		8	MHz
		1.6 V ≤ V_{DD} < 1.8 V		1		4	MHz
High-speed on-chip oscillator clock frequency accuracy		T_A = -20 to +85°C	1.8 V ≤ V_{DD} ≤ 5.5 V	-1		1	%
			1.6 V ≤ V_{DD} < 1.8 V	-5		5	%
		T_A = -40 to -20°C	1.8 V ≤ V_{DD} < 5.5 V	-1.5		1.5	%
			1.6 V ≤ V_{DD} < 1.8 V	-5.5		5.5	%
Low-speed on-chip oscillator clock frequency	f_{IL}				15		kHz
Low-speed on-chip oscillator clock frequency accuracy				-15		+15	%

Note 1. High-speed on-chip oscillator frequency is selected with bits 0 to 4 of the option byte (000C2H) and bits 0 to 2 of the HOCODIV register.

Note 2. This only indicates the oscillator characteristics. Refer to **AC Characteristics** for instruction execution time.

37.3 DC Characteristics

37.3.1 Pin characteristics

(T_A = -40 to +85°C, 1.6 V ≤ EV_{DD0} ≤ V_{DD} ≤ 5.5 V, V_{SS} = EV_{SS0} = 0 V) **(1/5)**

Items	Symbol	Conditions		MIN.	TYP.	MAX.	Unit
Output current, high Note 1	I_{OH1}	Per pin for P00 to P06, P10 to P17, P30, P31, P40 to P47, P50 to P55, P70 to P77, P120, P130, P140, P141, P146, P147				-10.0 Note 2	mA
		Total of P00 to P04, P40 to P43, P120, P130, P140, P141 (When duty ≤ 70% Note 3)	4.0 V ≤ EV_{DD0} ≤ 5.5 V			-55.0	mA
			2.7 V ≤ EV_{DD0} < 4.0 V			-10.0	mA
			1.8 V ≤ EV_{DD0} < 2.7 V			-5.0	mA
			1.6 V ≤ EV_{DD0} < 1.8 V			-2.5	mA
		Total of P05, P06, P10 to P17, P30, P31, P50 to P53, P70 to P77, P146, P147 (When duty ≤ 70% Note 3)	4.0 V ≤ EV_{DD0} ≤ 5.5 V			-80.0	mA
			2.7 V ≤ EV_{DD0} < 4.0 V			-19.0	mA
			1.8 V ≤ EV_{DD0} < 2.7 V			-10.0	mA
			1.6 V ≤ EV_{DD0} < 1.8 V			-5.0	mA
		Total of all pins (When duty ≤ 70% Note 3)				-135.0 Note 4	mA
	I_{OH2}	Per pin for P20 to P27				-0.1 Note 2	mA
		Total of all pins (When duty ≤ 70% Note 3)	1.6 V ≤ V_{DD} ≤ 5.5 V			-1.5	mA

Note 1. Value of current at which the device operation is guaranteed even if the current flows from the EV_{DD0}, V_{DD} pins to an output pin.

Note 2. Do not exceed the total current value.

Note 3. Specification under conditions where the duty factor ≤ 70%.
The output current value that has changed to the duty factor > 70% the duty ratio can be calculated with the following expression (when changing the duty factor from 70% to n%).

- Total output current of pins = (I_{OH} × 0.7)/(n × 0.01)
  <Example> Where n = 80% and I_{OH} = -10.0 mA
  Total output current of pins = (-10.0 × 0.7)/(80 × 0.01) ≈ -8.7 mA

However, the current that is allowed to flow into one pin does not vary depending on the duty factor.
A current higher than the absolute maximum rating must not flow into one pin.

Note 4. The applied current for the products for industrial application (R5F11BxxGxx) is -100 mA.

Caution **P00, P02 to P04, P10, P11, P13 to P15, P17, P30, P43, P50 to P55, P71, P74 do not output high level in N-ch open-drain mode.**

Remark Unless specified otherwise, the characteristics of alternate-function pins are the same as those of the port pins.

(T_A = -40 to +85°C, 1.6 V ≤ EV_{DD0} ≤ V_{DD} ≤ 5.5 V, V_{SS} = EV_{SS0} = 0 V) **(2/5)**

Items	Symbol	Conditions		MIN.	TYP.	MAX.	Unit
Output current, low Note 1	I_{OL1}	Per pin for P00 to P06, P10 to P17, P30, P31, P40 to P43, P50 to P55, P70 to P77,P120, P130, P140, P141, P146, P147				20.0 Note 2	mA
		Per pin for P60 to P63				15.0 Note 2	mA
		Total of P00 to P04, P40 to P43, P120, P130, P140, P141 (When duty ≤ 70% Note 3)	4.0 V ≤ EV_{DD0} ≤ 5.5 V			70.0	mA
			2.7 V ≤ EV_{DD0} < 4.0 V			15.0	mA
			1.8 V ≤ EV_{DD0} < 2.7 V			9.0	mA
			1.6 V ≤ EV_{DD0} < 1.8 V			4.5	mA
		Total of P05, P06, P10 to P17, P30, P31, P50 to P55, P60 to P63, P70 to P77, P146, P147 (When duty ≤ 70% Note 3)	4.0 V ≤ EV_{DD0} ≤ 5.5 V			80.0	mA
			2.7 V ≤ EV_{DD0} < 4.0 V			35.0	mA
			1.8 V ≤ EV_{DD0} < 2.7 V			20.0	mA
			1.6 V ≤ EV_{DD0} < 1.8 V			10.0	mA
		Total of all pins (When duty ≤ 70% Note 3)				150.0	mA
	I_{OL2}	Per pin for P20 to P27				0.4 Note 2	mA
		Total of all pins (When duty ≤ 70% Note 3)	1.6 V ≤ V_{DD} ≤ 5.5 V			5.0	mA

Note 1. Value of current at which the device operation is guaranteed even if the current flows from an output pin to the EV_{SS0} and V_{SS} pins.

Note 2. Do not exceed the total current value.

Note 3. Specification under conditions where the duty factor ≤ 70%.
The output current value that has changed to the duty factor > 70% the duty ratio can be calculated with the following expression (when changing the duty factor from 70% to n%).

- Total output current of pins = (I_{OL} × 0.7)/(n × 0.01)
  <Example> Where n = 80% and I_{OL} = 10.0 mA
  Total output current of pins = (10.0 × 0.7)/(80 × 0.01) ≈ 8.7 mA
  However, the current that is allowed to flow into one pin does not vary depending on the duty factor.
  A current higher than the absolute maximum rating must not flow into one pin.

Remark Unless specified otherwise, the characteristics of alternate-function pins are the same as those of the port pins.

(T_A = -40 to +85°C, 1.6 V ≤ EV_{DD0} ≤ V_{DD} ≤ 5.5 V, V_{SS} = EV_{SS0} = 0 V) **(3/5)**

Items	Symbol	Conditions		MIN.	TYP.	MAX.	Unit
Input voltage, high	V_{IH1}	P00 to P06, P10 to P17, P30, P31, P40 to P43, P50 to P55, P70 to P77, P120, P140, P141, P146, P147	Normal input buffer	0.8 EV_{DD0}		EV_{DD0}	V
	V_{IH2}	P01, P03, P04, P10, P14 to P17, P30, P43, P50, P53 to P55,	TTL input buffer 4.0 V ≤ EV_{DD0} ≤ 5.5 V	2.2		EV_{DD0}	V
			TTL input buffer 3.3 V ≤ EV_{DD0} < 4.0 V	2.0		EV_{DD0}	V
			TTL input buffer 1.6 V ≤ EV_{DD0} < 3.3 V	1.5		EV_{DD0}	V
	V_{IH3}	P20 to P27 (when P20 is used as a port pin)		0.7 V_{DD}		V_{DD}	V
	V_{IH4}	P60 to P63		0.7 EV_{DD0}		6.0	V
	V_{IH5}	P121 to P123, P137, EXCLK, EXCLKS, $\overline{RESET}$ (when P20 is used as INTP11 pin)		0.8 V_{DD}		V_{DD}	V
Input voltage, low	V_{IL1}	P00 to P06, P10 to P17, P30, P31, P40 to P43, P50 to P55, P70 to P77, P120, P140, P141, P146, P147	Normal input buffer	0		0.2 EV_{DD0}	V
	V_{IL2}	P01, P03, P04, P10, P14 to P17, P30, P43, P50, P53 to P55,	TTL input buffer 4.0 V ≤ EV_{DD0} ≤ 5.5 V	0		0.8	V
			TTL input buffer 3.3 V ≤ EV_{DD0} < 4.0 V	0		0.5	V
			TTL input buffer 1.6 V ≤ EV_{DD0} < 3.3 V	0		0.32	V
	V_{IL3}	P20 to P27 (when P20 is used as a port pin)		0		0.3 V_{DD}	V
	V_{IL4}	P60 to P63		0		0.3 EV_{DD0}	V
	V_{IL5}	P121 to P124, P137, EXCLK, EXCLKS, $\overline{RESET}$ (when P20 is used as INTP11 pin)		0		0.2 V_{DD}	V

Caution **The maximum value of V_{IH} of pins P00, P02 to P04, P10, P11, P13 to P15, P17, P30, P43, P50 to P55, P71, P74 is EV_{DD0}, even in the N-ch open-drain mode.**

Remark Unless specified otherwise, the characteristics of alternate-function pins are the same as those of the port pins.

(T_A = -40 to +85°C, 1.6 V ≤ EV_{DD0} ≤ V_{DD} ≤ 5.5 V, V_{SS} = EV_{SS0} = 0 V) **(4/5)**

Items	Symbol	Conditions		MIN.	TYP.	MAX.	Unit
Output voltage, high	V_{OH1}	P00 to P06, P10 to P17, P30, P31, P40 to P43, P50 to P55, P70 to P77, P120, P130, P140, P141, P146, P147	4.0 V ≤ EV_{DD0} ≤ 5.5 V, I_{OH1} = -10.0 mA	EV_{DD0} - 1.5			V
			4.0 V ≤ EV_{DD0} ≤ 5.5 V, I_{OH1} = -3.0 mA	EV_{DD0} - 0.7			V
			2.7 V ≤ EV_{DD0} ≤ 5.5 V, I_{OH1} = -2.0 mA	EV_{DD0} - 0.6			V
			1.8 V ≤ EV_{DD0} ≤ 5.5 V, I_{OH1} = -1.5 mA	EV_{DD0} - 0.5			V
			1.6 V ≤ EV_{DD0} < 1.8 V, I_{OH1} = -1.0 mA	EV_{DD0} - 0.5			V
	V_{OH2}	P20 to P27	1.6 V ≤ V_{DD} ≤ 5.5 V, I_{OH2} = -100 μA	V_{DD} - 0.5			V
Output voltage, low	V_{OL1}	P00 to P06, P10 to P17, P30, P31, P40 to P43, P50 to P55, P70 to P77, P120, P130, P140, P141, P146, P147	4.0 V ≤ EV_{DD0} ≤ 5.5 V, I_{OL1} = 20.0 mA			1.3	V
			4.0 V ≤ EV_{DD0} ≤ 5.5 V, I_{OL1} = 8.5 mA			0.7	V
			2.7 V ≤ EV_{DD0} ≤ 5.5 V, I_{OL1} = 3.0 mA			0.6	V
			2.7 V ≤ EV_{DD0} ≤ 5.5 V, I_{OL1} = 1.5 mA			0.4	V
			1.8 V ≤ EV_{DD0} ≤ 5.5 V, I_{OL1} = 0.6 mA			0.4	V
			1.6 V ≤ EV_{DD0} ≤ 5.5 V, I_{OL1} = 0.3 mA			0.4	V
	V_{OL2}	P20 to P27	1.6 V ≤ V_{DD} ≤ 5.5 V, I_{OL2} = 400 μA			0.4	V
	V_{OL3}	P60 to P63	4.0 V ≤ EV_{DD0} ≤ 5.5 V, I_{OL3} = 15.0 mA			2.0	V
			4.0 V ≤ EV_{DD0} ≤ 5.5 V, I_{OL3} = 5.0 mA			0.4	V
			2.7 V ≤ EV_{DD0} ≤ 5.5 V, I_{OL3} = 3.0 mA			0.4	V
			1.8 V ≤ EV_{DD0} ≤ 5.5 V, I_{OL3} = 2.0 mA			0.4	V
			1.6 V ≤ EV_{DD0} ≤ 5.5 V, I_{OL3} = 1.0 mA			0.4	V

Caution **P00, P02 to P04, P10, P11, P13 to P15, P17, P30, P43, P50 to P55, P71, P74 do not output high level in N-ch open-drain mode.**

Remark Unless specified otherwise, the characteristics of alternate-function pins are the same as those of the port pins.

(T_A = -40 to +85°C, 1.6 V ≤ EV_{DD0} ≤ V_{DD} ≤ 5.5 V, V_{SS} = EV_{SS0} = 0 V) **(5/5)**

Items	Symbol	Conditions			MIN.	TYP.	MAX.	Unit
Input leakage current, high	I_{LIH1}	P00 to P06, P10 to P17, P30, P31, P40 to P43, P50 to P55, P70 to P77, P120, P140, P141, P146, P147	V_I = EV_{DD0}				1	μA
	I_{LIH2}	P20 to P27, P137, $\overline{RESET}$	V_I = V_{DD}				1	μA
	I_{LIH3}	P121 to P124 (X1, X2, EXCLK, XT1, XT2, EXCLKS)	V_I = V_{DD}	In input port or external clock input			1	μA
				In resonator connection			10	μA
Input leakage current, low	I_{LIL1}	P00 to P06, P10 to P17, P30, P31, P40 to P43, P50 to P55, P70 to P77, P120, P140, P141, P146, P147	V_I = EV_{SS0}				-1	μA
	I_{LIL2}	P20 to P27, P137, $\overline{RESET}$	V_I = V_{SS}				-1	μA
	I_{LIL3}	P121 to P124 (X1, X2, EXCLK, XT1, XT2, EXCLKS)	V_I = V_{SS}	In input port or external clock input			-1	μA
				In resonator connection			-10	μA
On-chip pull-up resistance	R_U	P00 to P06, P10 to P17, P30, P31, P40 to P43, P50 to P55, P70 to P77, P120, P140, P141, P146, P147	V_I = EV_{SS0}, In input port		10	20	100	kΩ

Remark Unless specified otherwise, the characteristics of alternate-function pins are the same as those of the port pins.

37.3.2 Supply current characteristics

(T_A = -40 to +85°C, 1.6 V ≤ EV_{DD0} ≤ V_{DD} ≤ 5.5 V, V_{SS} = EV_{SS0} = 0 V) **(1/2)**

Parameter	Symbol	Conditions					MIN.	TYP.	MAX.	Unit
Supply current Note 1	I_{DD1}	Operating mode	HS (high-speed main) mode Note 5	f_{HOCO} = 64 MHz, f_{IH} = 32 MHz Note 3	Basic operation	V_{DD} = 5.0 V		2.4		mA
						V_{DD} = 3.0 V		2.4		
				f_{HOCO} = 32 MHz, f_{IH} = 32 MHz Note 3	Basic operation	V_{DD} = 5.0 V		2.1		
						V_{DD} = 3.0 V		2.1		
			HS (high-speed main) mode Note 5	f_{HOCO} = 64 MHz, f_{IH} = 32 MHz Note 3	Normal operation	V_{DD} = 5.0 V		5.2	8.7	mA
						V_{DD} = 3.0 V		5.2	8.7	
				f_{HOCO} = 32 MHz, f_{IH} = 32 MHz Note 3	Normal operation	V_{DD} = 5.0 V		4.8	8.1	
						V_{DD} = 3.0 V		4.8	8.1	
				f_{HOCO} = 48 MHz, f_{IH} = 24 MHz Note 3	Normal operation	V_{DD} = 5.0 V		4.1	6.9	
						V_{DD} = 3.0 V		4.1	6.9	
				f_{HOCO} = 24 MHz, f_{IH} = 24 MHz Note 3	Normal operation	V_{DD} = 5.0 V		3.8	6.3	
						V_{DD} = 3.0 V		3.8	6.3	
				f_{HOCO} = 16 MHz, f_{IH} = 16 MHz Note 3	Normal operation	V_{DD} = 5.0 V		2.8	4.6	
						V_{DD} = 3.0 V		2.8	4.6	
			LS (low-speed main) mode Note 5	f_{HOCO} = 8 MHz, f_{IH} = 8 MHz Note 3	Normal operation	V_{DD} = 3.0 V		1.3	2.1	mA
						V_{DD} = 2.0 V		1.3	2.1	
			LV (low-voltage main) mode Note 5	f_{HOCO} = 4 MHz, f_{IH} = 4 MHz Note 3	Normal operation	V_{DD} = 3.0 V		1.3	1.9	mA
						V_{DD} = 2.0 V		1.3	1.9	
			HS (high-speed main) mode Note 5	f_{MX} = 20 MHz Note 2, V_{DD} = 5.0 V	Normal operation	Square wave input		3.3	5.3	mA
						Resonator connection		3.5	5.5	
				f_{MX} = 20 MHz Note 2, V_{DD} = 3.0 V	Normal operation	Square wave input		3.3	5.3	
						Resonator connection		3.5	5.5	
				f_{MX} = 10 MHz Note 2, V_{DD} = 5.0 V	Normal operation	Square wave input		2	3.1	
						Resonator connection		2.1	3.2	
				f_{MX} = 10 MHz Note 2, V_{DD} = 3.0 V	Normal operation	Square wave input		2	3.1	
						Resonator connection		2.1	3.2	
			LS (low-speed main) mode Note 5	f_{MX} = 8 MHz Note 2, V_{DD} = 3.0 V	Normal operation	Square wave input		1.2	1.9	mA
						Resonator connection		1.2	2	
				f_{MX} = 8 MHz Note 2, V_{DD} = 2.0 V	Normal operation	Square wave input		1.2	1.9	
						Resonator connection		1.2	2	
			Subsystem clock operation	f_{SUB} = 32.768 kHz Note 4 T_A = -40°C	Normal operation	Square wave input		4.7	6.1	μA
						Resonator connection		4.7	6.1	
				f_{SUB} = 32.768 kHz Note 4 T_A = +25°C	Normal operation	Square wave input		4.7	6.1	
						Resonator connection		4.7	6.1	
				f_{SUB} = 32.768 kHz Note 4 T_A = +50°C	Normal operation	Square wave input		4.8	6.7	
						Resonator connection		4.8	6.7	
				f_{SUB} = 32.768 kHz Note 4 T_A = +70°C	Normal operation	Square wave input		4.8	7.5	
						Resonator connection		4.8	7.5	
				f_{SUB} = 32.768 kHz Note 4 T_A = +85°C	Normal operation	Square wave input		5.4	8.9	
						Resonator connection		5.4	8.9	

(**Notes** and **Remarks** are listed on the next page.)

Note 1. Total current flowing into V_{DD} and EV_{DD0}, including the input leakage current flowing when the level of the input pin is fixed to V_{DD}, EV_{DD0} or V_{SS}, EV_{SS0}. The following points apply in the HS (high-speed main), LS (low-speed main) modes, and LV (low-voltage main) mode.

- The currents in the "TYP." column do not include the operating currents of the peripheral modules.
- The currents in the "MAX." column include the operating currents of the peripheral modules, except for those flowing into the A/D converter, D/A converter, comparator, LVD circuit, I/O port, and on-chip pull-up/pull-down resistors, and those flowing while the data flash memory is being rewritten.

In the subsystem clock operation, the currents in both the "TYP." and "MAX." columns do not include the operating currents of the peripheral modules. However, in HALT mode, including the current flowing into the RTC.

Note 2. When high-speed on-chip oscillator and subsystem clock are stopped.

Note 3. When high-speed system clock and subsystem clock are stopped.

Note 4. When high-speed on-chip oscillator and high-speed system clock are stopped. When AMPHS1 = 1 (Ultra-low power consumption oscillation).

Note 5. Relationship between operation voltage width, operation frequency of CPU and operation mode is as below.

HS (high-speed main) mode:	2.7 V ≤ V_{DD} ≤ 5.5 V@1 MHz to 32 MHz
	2.4 V ≤ V_{DD} ≤ 5.5 V@1 MHz to 16 MHz
LS (low-speed main) mode:	1.8 V ≤ V_{DD} ≤ 5.5 V@1 MHz to 8 MHz
LV (low-voltage main) mode:	1.6 V ≤ V_{DD} ≤ 5.5 V@1 MHz to 4 MHz

Remark 1. f_{MX}: High-speed system clock frequency (X1 clock oscillation frequency or external main system clock frequency)

Remark 2. f_{HOCO}: High-speed on-chip oscillator clock frequency (64 MHz max.)

Remark 3. f_{IH}: High-speed on-chip oscillator clock frequency (32 MHz max.)

Remark 4. f_{SUB}: Subsystem clock frequency (XT1 clock oscillation frequency)

Remark 5. Except subsystem clock operation, temperature condition of the TYP. value is T_A = 25°C

(T_A = -40 to +85°C, 1.6 V ≤ EV_{DD0} ≤ V_{DD} ≤ 5.5 V, V_{SS} = EV_{SS0} = 0 V) **(2/2)**

Parameter	Symbol	Conditions				MIN.	TYP.	MAX.	Unit
Supply current Note 1	I_{DD2} Note 2	HALT mode	HS (high-speed main) mode Note 6	f_{HOCO} = 64 MHz, f_{IH} = 32 MHz Note 4	V_{DD} = 5.0 V		0.8	3.09	mA
					V_{DD} = 3.0 V		0.8	3.09	
				f_{HOCO} = 32 MHz, f_{IH} = 32 MHz Note 4	V_{DD} = 5.0 V		0.54	2.4	
					V_{DD} = 3.0 V		0.54	2.4	
				f_{HOCO} = 48 MHz, f_{IH} = 24 MHz Note 4	V_{DD} = 5.0 V		0.62	2.4	
					V_{DD} = 3.0 V		0.62	2.4	
				f_{HOCO} = 24 MHz, f_{IH} = 24 MHz Note 4	V_{DD} = 5.0 V		0.44	1.83	
					V_{DD} = 3.0 V		0.44	1.83	
				f_{HOCO} = 16 MHz, f_{IH} = 16 MHz Note 4	V_{DD} = 5.0 V		0.4	1.38	
					V_{DD} = 3.0 V		0.4	1.38	
			LS (low-speed main) mode Note 6	f_{HOCO} = 8 MHz, f_{IH} = 8 MHz Note 4	V_{DD} = 3.0 V		260	790	μA
					V_{DD} = 2.0 V		260	790	
			LV (low-voltage main) mode Note 6	f_{HOCO} = 4 MHz, f_{IH} = 4 MHz Note 4	V_{DD} = 3.0 V		420	830	μA
					V_{DD} = 2.0 V		420	830	
			HS (high-speed main) mode Note 6	f_{MX} = 20 MHz Note 3, V_{DD} = 5.0 V	Square wave input		0.28	1.55	mA
					Resonator connection		0.49	1.74	
				f_{MX} = 20 MHz Note 3, V_{DD} = 3.0 V	Square wave input		0.28	1.55	
					Resonator connection		0.49	1.74	
				f_{MX} = 10 MHz Note 3, V_{DD} = 5.0 V	Square wave input		0.19	0.86	
					Resonator connection		0.3	0.93	
				f_{MX} = 10 MHz Note 3, V_{DD} = 3.0 V	Square wave input		0.19	0.86	
					Resonator connection		0.3	0.93	
			LS (low-speed main) mode Note 6	f_{MX} = 8 MHz Note 3, V_{DD} = 3.0 V	Square wave input		95	640	μA
					Resonator connection		145	680	
				f_{MX} = 8 MHz Note 3, V_{DD} = 2.0 V	Square wave input		95	640	
					Resonator connection		145	680	
			Subsystem clock operation	f_{SUB} = 32.768 kHz Note 5, T_A = -40°C	Square wave input		0.25	0.57	μA
					Resonator connection		0.44	0.76	
				f_{SUB} = 32.768 kHz Note 5, T_A = 25°C	Square wave input		0.3	0.57	
					Resonator connection		0.49	0.76	
				f_{SUB} = 32.768 kHz Note 5, T_A = 50°C	Square wave input		0.36	1.17	
					Resonator connection		0.59	1.36	
				f_{SUB} = 32.768 kHz Note 5, T_A = 70°C	Square wave input		0.49	1.97	
					Resonator connection		0.72	2.16	
				f_{SUB} = 32.768 kHz Note 5, T_A = 85°C	Square wave input		0.97	3.37	
					Resonator connection		1.16	3.56	
	I_{DD3}	STOP mode Note 7	T_A = -40°C				0.18	0.51	μA
			T_A = +25°C				0.24	0.51	
			T_A = +50°C				0.29	1.1	
			T_A = +70°C				0.41	1.9	
			T_A = +85°C				0.9	3.3	

(**Notes** and **Remarks** are listed on the next page.)

Note 1. Total current flowing into V_{DD} and EV_{DD0}, including the input leakage current flowing when the level of the input pin is fixed to V_{DD}, EV_{DD0} or V_{SS}, EV_{SS0}. The following points apply in the HS (high-speed main), LS (low-speed main) modes, and LV (low-voltage main) mode.

- The currents in the "TYP." column do not include the operating currents of the peripheral modules.
- The currents in the "MAX." column include the operating currents of the peripheral modules, except for those flowing into the A/D converter, D/A converter, comparator, LVD circuit, I/O port, and on-chip pull-up/pull-down resistors, and those flowing while the data flash memory is being rewritten.

In the subsystem clock operation, the currents in both the "TYP." and "MAX." columns do not include the operating currents of the peripheral modules. However, in HALT mode, including the current flowing into the RTC.

In the STOP mode, the currents in both the "TYP." and "MAX." columns do not include the operating currents of the peripheral modules.

Note 2. During HALT instruction execution by flash memory.

Note 3. When high-speed on-chip oscillator and subsystem clock are stopped.

Note 4. When high-speed system clock and subsystem clock are stopped.

Note 5. When high-speed on-chip oscillator and high-speed system clock are stopped. When RTCLPC = 1 and setting ultra-low current consumption (AMPHS1 = 1).

Note 6. Relationship between operation voltage width, operation frequency of CPU and operation mode is as below.

HS (high-speed main) mode: 2.7 V ≤ V_{DD} ≤ 5.5 V@1 MHz to 32 MHz
2.4 V ≤ V_{DD} ≤ 5.5 V@1 MHz to 16 MHz
LS (low-speed main) mode: 1.8 V ≤ V_{DD} ≤ 5.5 V@1 MHz to 8 MHz
LV (low-voltage main) mode: 1.6 V ≤ V_{DD} ≤ 5.5 V@1 MHz to 4 MHz

Note 7. Regarding the value for current to operate the subsystem clock in STOP mode, refer to that in HALT mode.

Remark 1. f_{MX}: High-speed system clock frequency (X1 clock oscillation frequency or external main system clock frequency)

Remark 2. f_{HOCO}: High-speed on-chip oscillator clock frequency (64 MHz max.)

Remark 3. f_{IH}: High-speed on-chip oscillator clock frequency (32 MHz max.)

Remark 4. f_{SUB}: Subsystem clock frequency (XT1 clock oscillation frequency)

Remark 5. Except subsystem clock operation and STOP mode, temperature condition of the TYP. value is T_A = 25°C

(T_A = -40 to +85°C, 1.6 V ≤ EV_{DD0} ≤ V_{DD} ≤ 5.5 V, V_{SS} = EV_{SS0} = 0 V)

Parameter	Symbol	Conditions		MIN.	TYP.	MAX.	Unit
Low-speed on-chip oscillator operating current	I_{FIL} Note 1				0.2		μA
RTC operating current	I_{RTC} Notes 1, 2, 3				0.02		μA
12-bit interval timer operating current	I_{IT} Notes 1, 2, 4				0.02		μA
Watchdog timer operating current	I_{WDT} Notes 1, 2, 5	f_{IL} = 15 kHz			0.22		μA
A/D converter operating current	I_{ADC} Notes 1, 6	When conversion at maximum speed	Normal mode, AV_{REFP} = V_{DD} = 5.0 V		1.3	1.7	mA
			Low voltage mode, AV_{REFP} = V_{DD} = 3.0 V		0.5	0.7	mA
A/D converter reference voltage current	I_{ADREF} Note 1				75		μA
Temperature sensor operating current	I_{TMPS} Note 1				75		μA
D/A converter operating current	I_{DAC} Notes 1, 11	Per D/A converter channel				1.5	mA
PGA operating current		Operation			480	700	μA
Comparator operating current	I_{CMP} Notes 1, 12	Operation (per comparator channel, constant current for comparator included)	When the internal reference voltage is not in use		50	100	μA
			When the internal reference voltage is in use		60	110	μA
LVD operating current	I_{LVD} Notes 1, 7				0.08		μA
Self-programming operating current	I_{FSP} Notes 1, 9				2.5	12.2	mA
BGO operating current	I_{BGO} Notes 1, 8				2.5	12.2	mA
SNOOZE operating current	I_{SNOZ} Note 1	ADC operation	The mode is performed Note 10		0.5	0.6	mA
			The A/D conversion operations are performed, Low voltage mode, AV_{REFP} = V_{DD} = 3.0 V		1.2	1.44	
		Simplified SPI (CSI)/UART operation			0.7	0.84	
		DTC operation			3.1		

Note 1. Current flowing to V_{DD}.

Note 2. When high speed on-chip oscillator and high-speed system clock are stopped.

Note 3. Current flowing only to the real-time clock (RTC) (excluding the operating current of the low-speed on-chip oscillator and the XT1 oscillator). The supply current of the RL78 microcontrollers is the sum of the values of either I_{DD1} or I_{DD2}, and I_{RTC}, when the real-time clock operates in operation mode or HALT mode. When the low-speed on-chip oscillator is selected, I_{FIL} should be added. I_{DD2} subsystem clock operation includes the operational current of the real-time clock.

Note 4. Current flowing only to the 12-bit interval timer (excluding the operating current of the low-speed on-chip oscillator and the XT1 oscillator). The supply current of the RL78 microcontrollers is the sum of the values of either I_{DD1} or I_{DD2}, and I_{IT}, when the 12-bit interval timer operates in operation mode or HALT mode. When the low-speed on-chip oscillator is selected, I_{FIL} should be added.

Note 5. Current flowing only to the watchdog timer (including the operating current of the low-speed on-chip oscillator).
The supply current of the RL78 microcontrollers is the sum of I_{DD1}, I_{DD2} or I_{DD3} and I_{WDT} when the watchdog timer is in operation.

Note 6. Current flowing only to the A/D converter. The supply current of the RL78 microcontrollers is the sum of I_{DD1} or I_{DD2} and I_{ADC} when the A/D converter operates in an operation mode or the HALT mode.

Note 7. Current flowing only to the LVD circuit. The supply current of the RL78 microcontrollers is the sum of I_{DD1}, I_{DD2} or I_{DD3} and I_{LVD} when the LVD circuit is in operation.

Note 8. Current flowing during programming of the data flash.

Note 9. Current flowing during self-programming.

Note 10. For shift time to the SNOOZE mode, see **26.3.3 SNOOZE mode**.

Note 11. Current flowing only to the D/A converter. The supply current of the RL78 microcontrollers is the sum of I_{DD1} or I_{DD2} and I_{DAC} when the D/A converter operates in an operation mode or the HALT mode.

Note 12. Current flowing only to the comparator circuit. The supply current of the RL78 microcontrollers is the sum of I_{DD1}, I_{DD2}, or I_{DD3} and I_{CMP} when the comparator circuit is in operation.

Remark 1. f_{IL}: Low-speed on-chip oscillator clock frequency

Remark 2. f_{SUB}: Subsystem clock frequency (XT1 clock oscillation frequency)

Remark 3. f_{CLK}: CPU/peripheral hardware clock frequency

Remark 4. Temperature condition of the TYP. value is T_A = 25°C

37.4 AC Characteristics

(T_A = -40 to +85°C, 1.6 V ≤ EV_{DD0} ≤ V_{DD} ≤ 5.5 V, V_{SS} = EV_{SS0} = 0 V) **(1/2)**

Items	Symbol	Conditions			MIN.	TYP.	MAX.	Unit
Instruction cycle (minimum instruction execution time)	T_{CY}	Main system clock (f_{MAIN}) operation	HS (high-speed main) mode	2.7 V ≤ V_{DD} ≤ 5.5 V	0.03125		1	μs
				2.4 V ≤ V_{DD} < 2.7 V	0.0625		1	μs
			LS (low-speed main) mode	1.8 V ≤ V_{DD} ≤ 5.5 V	0.125		1	μs
			LV (low-voltage main) mode	1.6 V ≤ V_{DD} ≤ 5.5 V	0.25		1	μs
		Subsystem clock (f_{SUB}) operation		1.8 V ≤ V_{DD} ≤ 5.5 V	28.5	30.5	31.3	μs
		In the self-programming mode	HS (high-speed main) mode	2.7 V ≤ V_{DD} ≤ 5.5 V	0.03125		1	μs
				2.4 V ≤ V_{DD} < 2.7 V	0.0625		1	μs
			LS (low-speed main) mode	1.8 V ≤ V_{DD} ≤ 5.5 V	0.125		1	μs
			LV (low-voltage main) mode	1.8 V ≤ V_{DD} ≤ 5.5 V	0.25		1	μs
External system clock frequency	f_{EX}	2.7 V ≤ V_{DD} ≤ 5.5 V			1.0		20.0	MHz
		2.4 V ≤ V_{DD} ≤ 2.7 V			1.0		16.0	MHz
		1.8 V ≤ V_{DD} < 2.4 V			1.0		8.0	MHz
		1.6 V ≤ V_{DD} < 1.8 V			1.0		4.0	MHz
	f_{EXS}				32		35	kHz
External system clock input high-level width, low-level width	t_{EXH}, t_{EXL}	2.7 V ≤ V_{DD} ≤ 5.5 V			24			ns
		2.4 V ≤ V_{DD} ≤ 2.7 V			30			ns
		1.8 V ≤ V_{DD} < 2.4 V			60			ns
		1.6 V ≤ V_{DD} < 1.8 V			120			ns
	t_{EXHS}, t_{EXLS}				13.7			μs
TI00 to TI03 input high-level width, low-level width	t_{TIH}, t_{TIL}				1/f_{MCK} + 10 Note			ns
Timer RJ input cycle	f_C	TRJIO		2.7 V ≤ EV_{DD0} ≤ 5.5 V	100			ns
				1.8 V ≤ EV_{DD0} < 2.7 V	300			ns
				1.6 V ≤ EV_{DD0} < 1.8 V	500			ns
Timer RJ input high-level width, low-level width	t_{TJIH}, t_{TJIL}	TRJIO		2.7 V ≤ EV_{DD0} ≤ 5.5 V	40			ns
				1.8 V ≤ EV_{DD0} < 2.7 V	120			ns
				1.6 V ≤ EV_{DD0} < 1.8 V	200			ns

Note The following conditions are required for low voltage interface when EV_{DD0} < V_{DD}
1.8 V ≤ EV_{DD0} < 2.7 V: MIN. 125 ns
1.6 V ≤ EV_{DD0} < 1.8 V: MIN. 250 ns

Remark f_{MCK}: Timer array unit operation clock frequency
(Operation clock to be set by the CKSmn bit of timer mode register mn (TMRmn). m: Unit number (m = 0, 1), n: Channel number (n = 0 to 3))

(T_A = -40 to +85°C, 1.6 V ≤ EV_{DD0} ≤ V_{DD} ≤ 5.5 V, V_{SS} = EV_{SS0} = 0 V) **(2/2)**

Items	Symbol	Conditions		MIN.	TYP.	MAX.	Unit
Timer RD input high-level width, low-level width	t_{TDIH}, t_{TDIL}	TRDIOA0, TRDIOA1, TRDIOB0, TRDIOB1, TRDIOC0, TRDIOC1, TRDIOD0, TRDIOD1		3/f_{CLK}			ns
Timer RD forced cutoff signal input low-level width	t_{TDSIL}	P130/INTP0	2MHz < f_{CLK} ≤ 32 MHz	1			μs
			f_{CLK} ≤ 2 MHz	1/f_{CLK} + 1			
Timer RG input high-level width, low-level width	t_{TGIH}, t_{TGIL}	TRGIOA, TRGIOB		2.5/f_{CLK}			ns
TO00 to TO03, TRJIO0, TRJO0, TRDIOA0, TRDIOA1, TRDIOB0, TRDIOB1, TRDIOC0, TRDIOC1, TRDIOD0, TRDIOD1, TRGIOA, TRGIOB output frequency	f_{TO}	HS (high-speed main) mode	4.0 V ≤ EV_{DD0} ≤ 5.5 V			16	MHz
			2.7 V ≤ EV_{DD0} < 4.0 V			8	MHz
			1.8 V ≤ EV_{DD0} < 2.7 V			4	MHz
			1.6 V ≤ EV_{DD0} < 1.8 V			2	MHz
		LS (low-speed main) mode	1.8 V ≤ EV_{DD0} ≤ 5.5 V			4	MHz
			1.6 V ≤ EV_{DD0} < 1.8 V			2	MHz
		LV (low-voltage main) mode	1.6 V ≤ EV_{DD0} ≤ 5.5 V			2	MHz
PCLBUZ0, PCLBUZ1 output frequency	f_{PCL}	HS (high-speed main) mode	4.0 V ≤ EV_{DD0} ≤ 5.5 V			16	MHz
			2.7 V ≤ EV_{DD0} < 4.0 V			8	MHz
			1.8 V ≤ EV_{DD0} < 2.7 V			4	MHz
			1.6 V ≤ EV_{DD0} < 1.8 V			2	MHz
		LS (low-speed main) mode	1.8 V ≤ EV_{DD0} ≤ 5.5 V			4	MHz
			1.6 V ≤ EV_{DD0} < 1.8 V			2	MHz
		LV (low-voltage main) mode	1.8 V ≤ EV_{DD0} ≤ 5.5 V			4	MHz
			1.6 V ≤ EV_{DD0} < 1.8 V			2	MHz
Interrupt input high-level width, low-level width	t_{INTH}, t_{INTL}	INTP0	1.6 V ≤ V_{DD} ≤ 5.5 V	1			μs
		INTP1 to INTP11	1.6 V ≤ EV_{DD0} ≤ 5.5 V	1			μs
Key interrupt input low-level width	t_{KR}	KR0 to KR7	1.8 V ≤ EV_{DD0} ≤ 5.5 V	250			ns
			1.6 V ≤ EV_{DD0} < 1.8 V	1			μs
$\overline{\text{RESET}}$ low-level width	t_{RSL}			10			μs

Minimum Instruction Execution Time during Main System Clock Operation

T_{CY} vs V_{DD} (HS (high-speed main) mode)

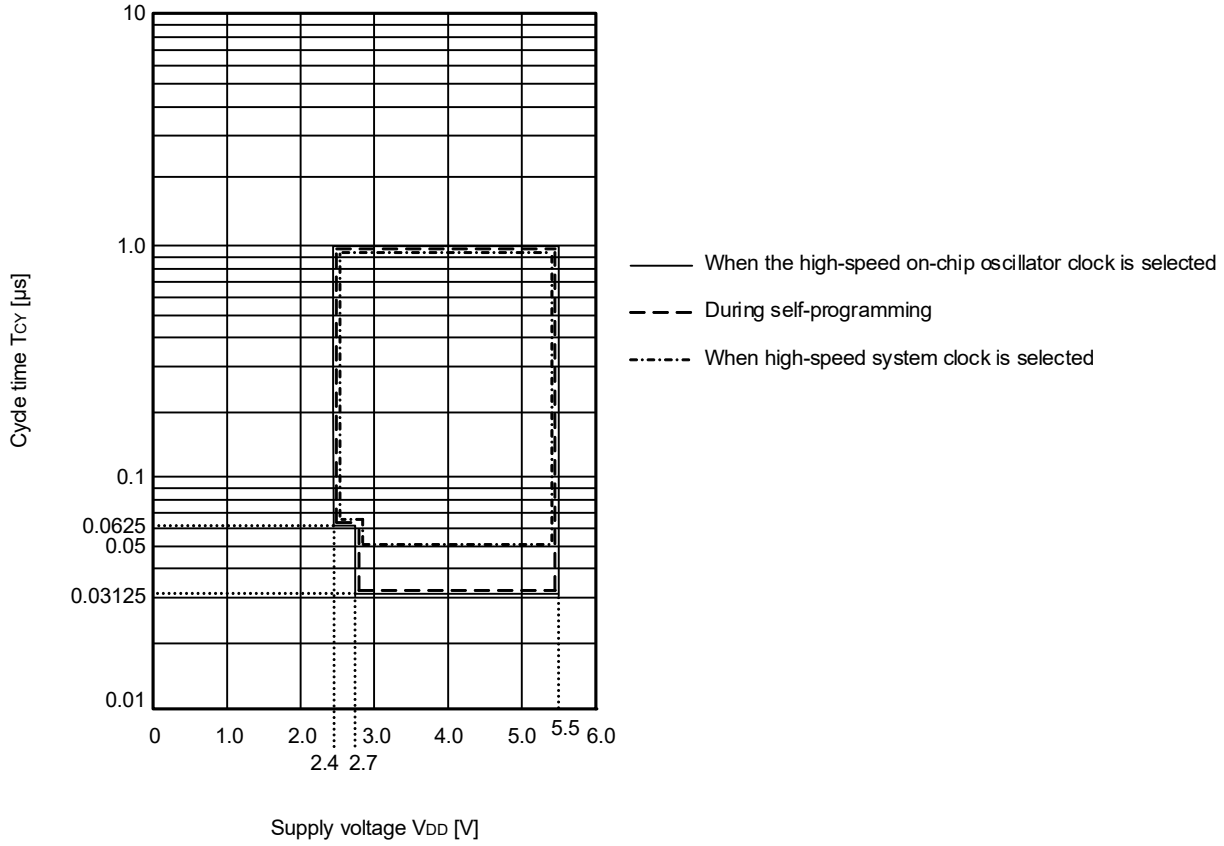

T_{CY} vs V_{DD} (LS (low-speed main) mode)

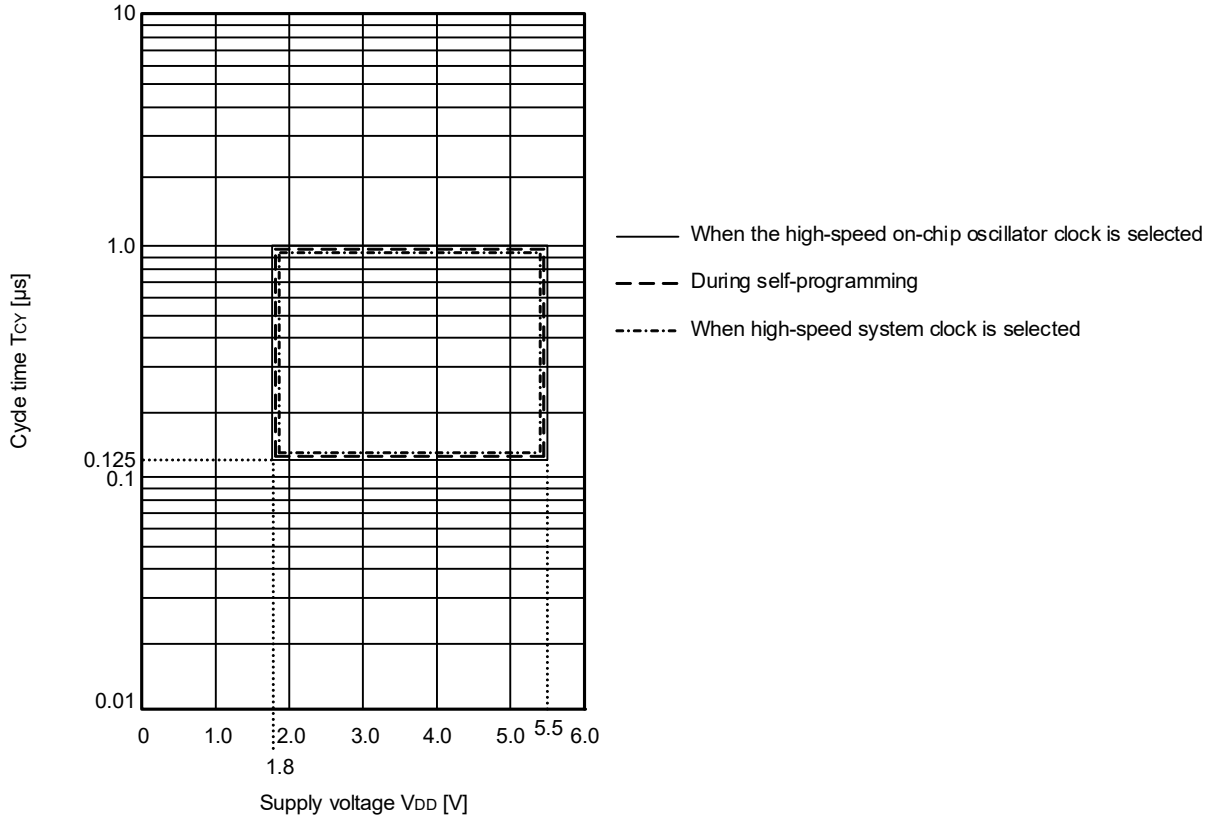

T_{CY} vs V_{DD} (LV (low-voltage main) mode)

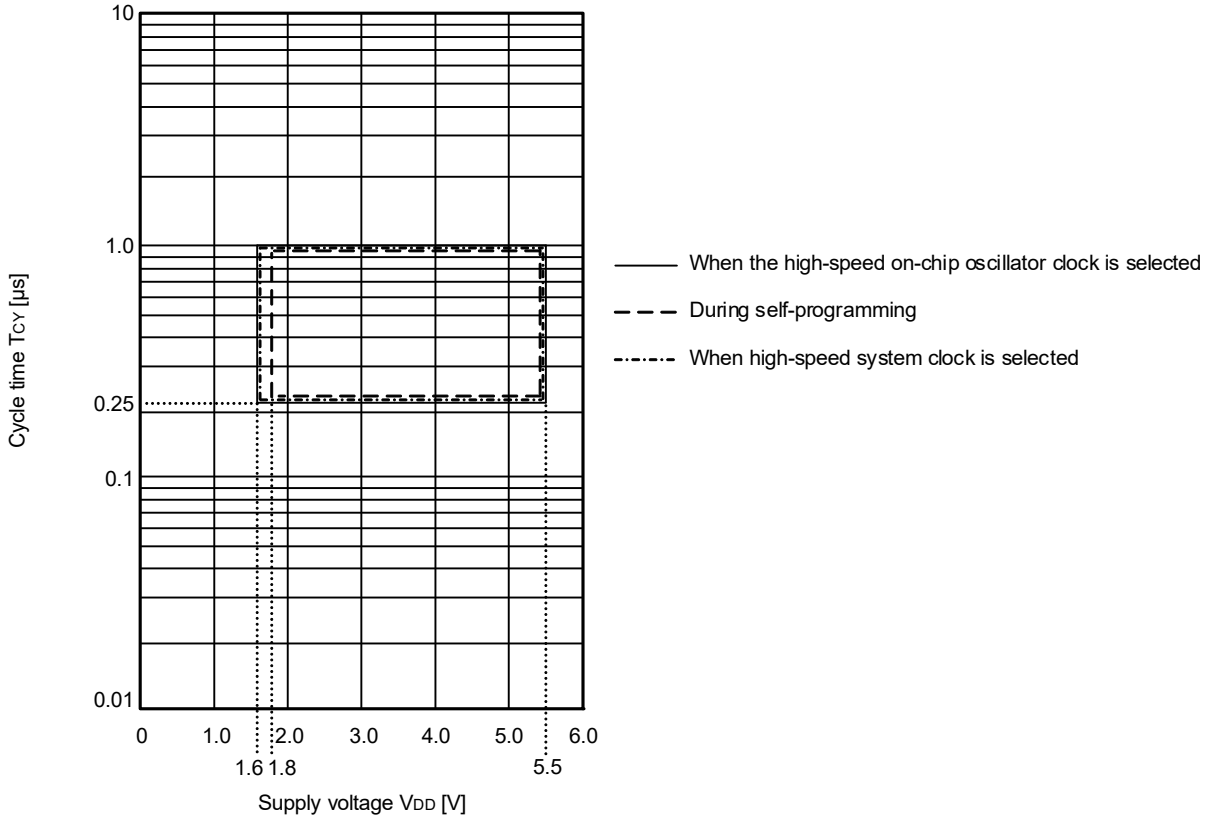

AC Timing Test Points

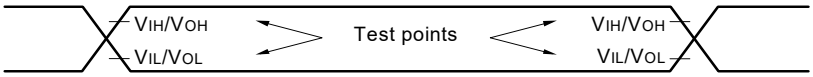

External System Clock Timing

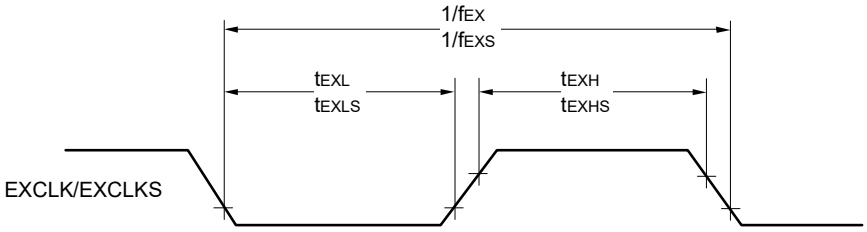

TI/TO Timing

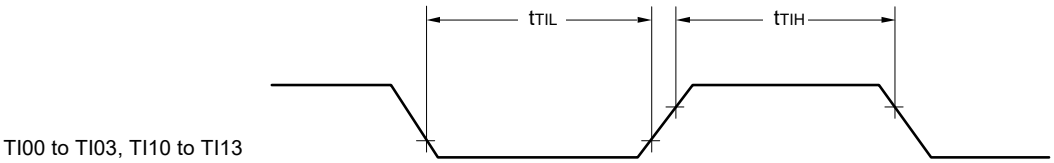

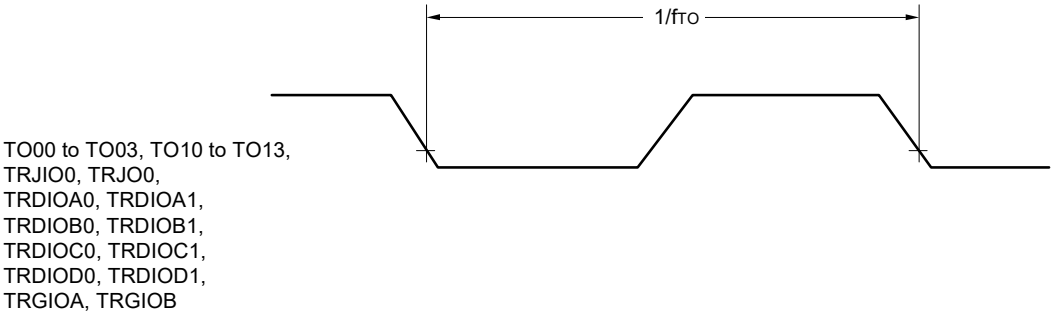

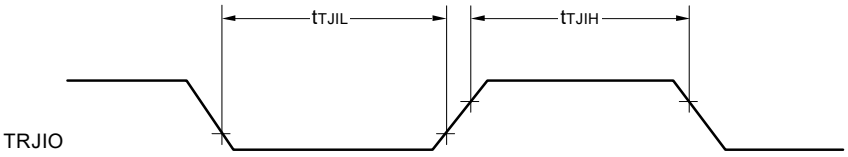
tTJIL
tTJIH
TRJIO

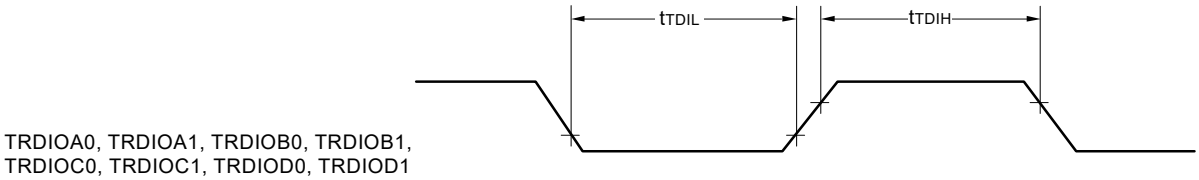
tTDIL
tTDIH
TRDIOA0, TRDIOA1, TRDIOB0, TRDIOB1,
TRDIOC0, TRDIOC1, TRDIOD0, TRDIOD1

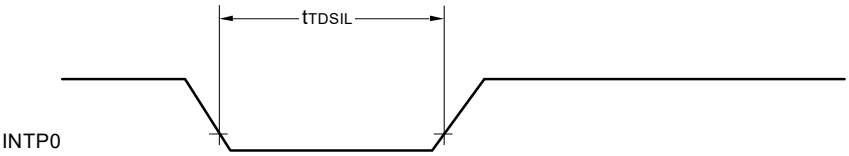
tTDSIL
INTP0

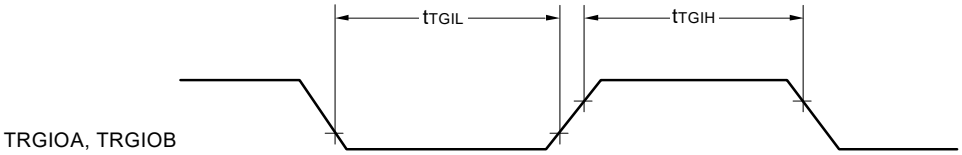
tTGIL
tTGIH
TRGIOA, TRGIOB

Interrupt Request Input Timing

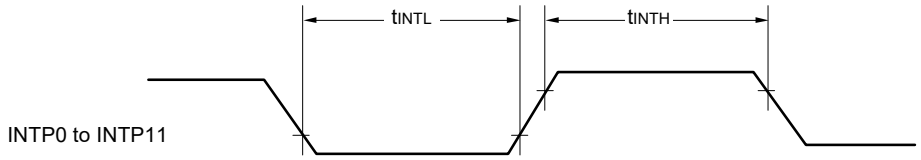

Key Interrupt Input Timing

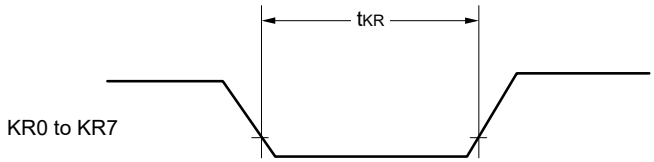

$\overline{\text{RESET}}$ Input Timing

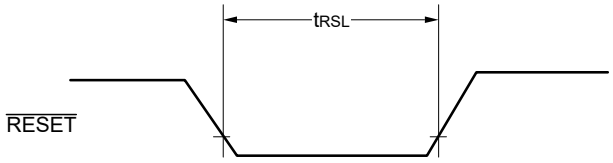

37.5 Peripheral Functions Characteristics

AC Timing Test Points

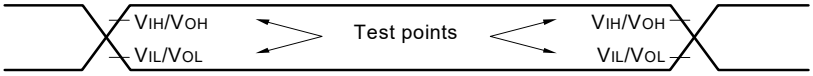

37.5.1 Serial array unit

(1) During communication at same potential (UART mode)

(T_A = -40 to +85°C, 1.6 V ≤ EV_{DD0} ≤ 5.5 V, V_{SS} = EV_{SS0} = 0 V)

Parameter	Symbol	Conditions	HS (high-speed main) Mode		LS (low-speed main) Mode		LV (low-voltage main) Mode		Unit
			MIN.	MAX.	MIN.	MAX.	MIN.	MAX.	
Transfer rate Note 1		2.4 V ≤ EV_{DD0} ≤ 5.5 V		f_{MCK}/6 Note 2		f_{MCK}/6		f_{MCK}/6	bps
		Theoretical value of the maximum transfer rate f_{MCK} = f_{CLK} Note 3		5.3		1.3		0.6	Mbps
		1.8 V ≤ EV_{DD0} ≤ 5.5 V		f_{MCK}/6 Note 2		f_{MCK}/6		f_{MCK}/6	bps
		Theoretical value of the maximum transfer rate f_{MCK} = f_{CLK} Note 3		5.3		1.3		0.6	Mbps
		1.7 V ≤ EV_{DD0} ≤ 5.5 V		f_{MCK}/6 Note 2		f_{MCK}/6 Note 2		f_{MCK}/6	bps
		Theoretical value of the maximum transfer rate f_{MCK} = f_{CLK} Note 3		5.3		1.3		0.6	Mbps
		1.6 V ≤ EV_{DD0} ≤ 5.5 V	—			f_{MCK}/6 Note 2		f_{MCK}/6	bps
		Theoretical value of the maximum transfer rate f_{MCK} = f_{CLK} Note 3	—			1.3		0.6	Mbps

Note 1. Transfer rate in the SNOOZE mode is 4800 bps only.
However, the SNOOZE mode cannot be used when FRQSEL4 = 1.

Note 2. The following conditions are required for low voltage interface when EV_{DD0} < V_{DD}.
2.4 V ≤ EV_{DD0} < 2.7 V: MAX. 2.6 Mbps
1.8 V ≤ EV_{DD0} < 2.4 V: MAX. 1.3 Mbps
1.6 V ≤ EV_{DD0} < 1.8 V: MAX. 0.6 Mbps

Note 3. The maximum operating frequencies of the CPU/peripheral hardware clock (f_{CLK}) are:
HS (high-speed main) mode: 32 MHz (2.7 V ≤ V_{DD} ≤ 5.5 V)
16 MHz (2.4 V ≤ V_{DD} ≤ 5.5 V)
LS (low-speed main) mode: 8 MHz (1.8 V ≤ V_{DD} ≤ 5.5 V)
LV (low-voltage main) mode: 4 MHz (1.6 V ≤ V_{DD} ≤ 5.5 V)

Caution Select the normal input buffer for the RxDq pin and the normal output mode for the TxDq pin by using port input mode register g (PIMg) and port output mode register g (POMg).

UART mode connection diagram (during communication at same potential)

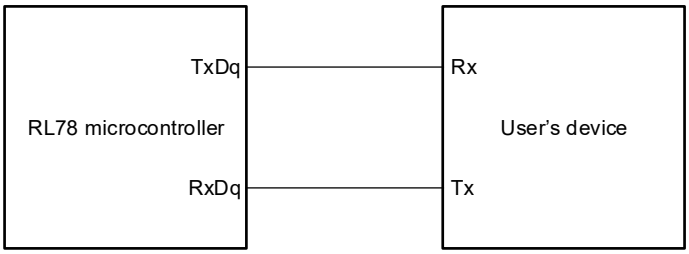

UART mode bit width (during communication at same potential) (reference)

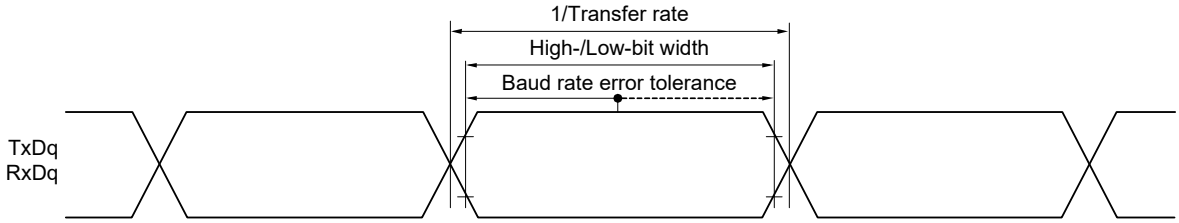

Remark 1. q: UART number (q = 0 to 2), g: PIM and POM number (g = 0, 1, 3, 5, 7)

Remark 2. f_{MCK}: Serial array unit operation clock frequency
(Operation clock to be set by the CKSmn bit of serial mode register mn (SMRmn). m: Unit number, n: Channel number (mn = 00 to 03, 10, 11))

(2) During communication at same potential (Simplified SPI (CSI) mode) (master mode, SCKp... internal clock output, corresponding CSI00 only)

(T_A = -40 to +85°C, 2.7 V ≤ EV_{DD0} ≤ V_{DD} ≤ 5.5 V, V_{SS} = EV_{SS0} = 0 V)

Parameter	Symbol	Conditions		HS (high-speed main) mode		LS (low-speed main) mode		LV (low-voltage main) mode		Unit
				MIN.	MAX.	MIN.	MAX.	MIN.	MAX.	
SCKp cycle time	t_{KCY1}	t_{KCY1} ≥ 2/f_{CLK}	4.0 V ≤ EV_{DD0} ≤ 5.5 V	62.5		250		500		ns
			2.7 V ≤ EV_{DD0} ≤ 5.5 V	83.3		250		500		ns
SCKp high-/low-level width	t_{KH1}, t_{KL1}	4.0 V ≤ EV_{DD0} ≤ 5.5 V		t_{KCY1}/2 - 7		t_{KCY1}/2 - 50		t_{KCY1}/2 - 50		ns
		2.7 V ≤ EV_{DD0} ≤ 5.5 V		t_{KCY1}/2 - 10		t_{KCY1}/2 - 50		t_{KCY1}/2 - 50		ns
SIp setup time (to SCKp↑) Note 1	t_{SIK1}	4.0 V ≤ EV_{DD0} ≤ 5.5 V		23		110		110		ns
		2.7 V ≤ EV_{DD0} ≤ 5.5 V		33		110		110		ns
SIp hold time (from SCKp↑) Note 2	t_{KSI1}	2.7 V ≤ EV_{DD0} ≤ 5.5 V		10		10		10		ns
Delay time from SCKp↓ to SOp output Note 3	t_{KSO1}	C = 20 pF Note 4			10		10		10	ns

Note 1. When DAPmn = 0 and CKPmn = 0, or DAPmn = 1 and CKPmn = 1. The SIp setup time becomes "to SCKp↓" when DAPmn = 0 and CKPmn = 1, or DAPmn = 1 and CKPmn = 0.

Note 2. When DAPmn = 0 and CKPmn = 0, or DAPmn = 1 and CKPmn = 1. The SIp hold time becomes "from SCKp↓" when DAPmn = 0 and CKPmn = 1, or DAPmn = 1 and CKPmn = 0.

Note 3. When DAPmn = 0 and CKPmn = 0, or DAPmn = 1 and CKPmn = 1. The delay time to SOp output becomes "from SCKp↑" when DAPmn = 0 and CKPmn = 1, or DAPmn = 1 and CKPmn = 0.

Note 4. C is the load capacitance of the SCKp and SOp output lines.

Caution **Select the normal input buffer for the SIp pin and the normal output mode for the SOp pin and SCKp pin by using port input mode register g (PIMg) and port output mode register g (POMg).**

Remark 1. This value is valid only when CSI00's peripheral I/O redirect function is not used.

Remark 2. p: CSI number (p = 00), m: Unit number (m = 0), n: Channel number (n = 0),
g: PIM and POM numbers (g = 1)

Remark 3. f_{MCK}: Serial array unit operation clock frequency
(Operation clock to be set by the CKSmn bit of serial mode register mn (SMRmn). m: Unit number,
n: Channel number (mn = 00))

(3) During communication at same potential (Simplified SPI (CSI) mode) (master mode, SCKp... internal clock output)

(T_A = -40 to +85°C, 1.6 V ≤ EV_{DD0} ≤ V_{DD} ≤ 5.5 V, V_{SS} = EV_{SS0} = 0 V)

Parameter	Symbol	Conditions		HS (high-speed main) mode		LS (low-speed main) mode		LV (low-voltage main) mode		Unit
				MIN.	MAX.	MIN.	MAX.	MIN.	MAX.	
SCKp cycle time	t_{KCY1}	t_{KCY1} ≥ 4/f_{CLK}	2.7 V ≤ EV_{DD0} ≤ 5.5 V	125		500		1000		ns
			2.4 V ≤ EV_{DD0} ≤ 5.5 V	250		500		1000		ns
			1.8 V ≤ EV_{DD0} ≤ 5.5 V	500		500		1000		ns
			1.7 V ≤ EV_{DD0} ≤ 5.5 V	1000		1000		1000		ns
			1.6 V ≤ EV_{DD0} ≤ 5.5 V	—		1000		1000		ns
SCKp high-/low-level width	t_{KH1}, t_{KL1}	4.0 V ≤ EV_{DD0} ≤ 5.5 V		t_{KCY1}/2 - 12		t_{KCY1}/2 - 50		t_{KCY1}/2 - 50		ns
		2.7 V ≤ EV_{DD0} ≤ 5.5 V		t_{KCY1}/2 - 18		t_{KCY1}/2 - 50		t_{KCY1}/2 - 50		ns
		2.4 V ≤ EV_{DD0} ≤ 5.5 V		t_{KCY1}/2 - 38		t_{KCY1}/2 - 50		t_{KCY1}/2 - 50		ns
		1.8 V ≤ EV_{DD0} ≤ 5.5 V		t_{KCY1}/2 - 50		t_{KCY1}/2 - 50		t_{KCY1}/2 - 50		ns
		1.7 V ≤ EV_{DD0} ≤ 5.5 V		t_{KCY1}/2 - 100		t_{KCY1}/2 - 100		t_{KCY1}/2 - 100		ns
		1.6 V ≤ EV_{DD0} ≤ 5.5 V		—		t_{KCY1}/2 - 100		t_{KCY1}/2 - 100		ns
SIp setup time (to SCKp↑) Note 1	t_{SIK1}	4.0 V ≤ EV_{DD0} ≤ 5.5 V		44		110		110		ns
		2.7 V ≤ EV_{DD0} ≤ 5.5 V		44		110		110		ns
		2.4 V ≤ EV_{DD0} ≤ 5.5 V		75		110		110		ns
		1.8 V ≤ EV_{DD0} ≤ 5.5 V		110		110		110		ns
		1.7 V ≤ EV_{DD0} ≤ 5.5 V		220		220		220		ns
		1.6 V ≤ EV_{DD0} ≤ 5.5 V		—		220		220		ns
SIp hold time (from SCKp↑) Note 2	t_{KSI1}	1.7 V ≤ EV_{DD0} ≤ 5.5 V		19		19		19		ns
		1.6 V ≤ EV_{DD0} ≤ 5.5 V		—		19		19		ns
Delay time from SCKp↓ to SOp output Note 3	t_{KSO1}	1.7 V ≤ EV_{DD0} ≤ 5.5 V C = 30 pF Note 4			25		25		25	ns
		1.6 V ≤ EV_{DD0} ≤ 5.5 V C = 30 pF Note 4			—		25		25	ns

Note 1. When DAPmn = 0 and CKPmn = 0, or DAPmn = 1 and CKPmn = 1. The SIp setup time becomes "to SCKp↓" when DAPmn = 0 and CKPmn = 1, or DAPmn = 1 and CKPmn = 0.

Note 2. When DAPmn = 0 and CKPmn = 0, or DAPmn = 1 and CKPmn = 1. The SIp hold time becomes "from SCKp↓" when DAPmn = 0 and CKPmn = 1, or DAPmn = 1 and CKPmn = 0.

Note 3. When DAPmn = 0 and CKPmn = 0, or DAPmn = 1 and CKPmn = 1. The delay time to SOp output becomes "from SCKp↑" when DAPmn = 0 and CKPmn = 1, or DAPmn = 1 and CKPmn = 0.

Note 4. C is the load capacitance of the SCKp and SOp output lines.

Caution **Select the normal input buffer for the SIp pin and the normal output mode for the SOp pin and SCKp pin by using port input mode register g (PIMg) and port output mode register g (POMg).**

Remark 1. p: CSI number (p = 00, 01, 10, 11, 20, 21), m: Unit number (m = 0, 1), n: Channel number (n = 0 to 3), g: PIM number (g = 0, 1, 3 , 5, 7)

Remark 2. f_{MCK}: Serial array unit operation clock frequency (Operation clock to be set by the CKSmn bit of serial mode register mn (SMRmn). m: Unit number, n: Channel number (mn = 00 to 03, 10, 11))

(4) During communication at same potential (Simplified SPI (CSI) mode) (slave mode, SCKp... external clock input)

(T_A = -40 to +85°C, 1.6 V ≤ EV_{DD0} ≤ V_{DD} ≤ 5.5 V, V_{SS} = EV_{SS0} = 0 V) **(1/2)**

Parameter	Symbol	Conditions		HS (high-speed main) mode		LS (low-speed main) mode		LV (low-voltage main) mode		Unit
				MIN.	MAX.	MIN.	MAX.	MIN.	MAX.	
SCKp cycle time Note 5	t_{KCY2}	4.0 V ≤ EV_{DD0} ≤ 5.5 V	20 MHz < f_{MCK}	8/f_{MCK}		—		—		ns
			f_{MCK} ≤ 20 MHz	6/f_{MCK}		6/f_{MCK}		6/f_{MCK}		ns
		2.7 V ≤ EV_{DD0} ≤ 5.5 V	16 MHz < f_{MCK}	8/f_{MCK}		—		—		ns
			f_{MCK} ≤ 16 MHz	6/f_{MCK}		6/f_{MCK}		6/f_{MCK}		ns
		2.4 V ≤ EV_{DD0} ≤ 5.5 V		6/f_{MCK} and 500		6/f_{MCK} and 500		6/f_{MCK} and 500		ns
		1.8 V ≤ EV_{DD0} ≤ 5.5 V		6/f_{MCK} and 750		6/f_{MCK} and 750		6/f_{MCK} and 750		ns
		1.7 V ≤ EV_{DD0} ≤ 5.5 V		6/f_{MCK} and 1500		6/f_{MCK} and 1500		6/f_{MCK} and 1500		ns
		1.6 V ≤ EV_{DD0} ≤ 5.5 V		—		6/f_{MCK} and 1500		6/f_{MCK} and 1500		ns
SCKp high-/ low-level width	t_{KH2}, t_{KL2}	4.0 V ≤ EV_{DD0} ≤ 5.5 V		t_{KCY2}/2 - 7		t_{KCY2}/2 - 7		t_{KCY2}/2 - 7		ns
		2.7 V ≤ EV_{DD0} ≤ 5.5 V		t_{KCY2}/2 - 8		t_{KCY2}/2 - 8		t_{KCY2}/2 - 8		ns
		1.8 V ≤ EV_{DD0} ≤ 5.5 V		t_{KCY2}/2 - 18		t_{KCY2}/2 - 18		t_{KCY2}/2 - 18		ns
		1.7 V ≤ EV_{DD0} ≤ 5.5 V		t_{KCY2}/2 - 66		t_{KCY2}/2 - 66		t_{KCY2}/2 - 66		ns
		1.6 V ≤ EV_{DD0} ≤ 5.5 V		—		t_{KCY2}/2 - 66		t_{KCY2}/2 - 66		ns
SIp setup time (to SCKp↑) Note 1	t_{SIK2}	2.7 V ≤ EV_{DD0} ≤ 5.5 V		1/f_{MCK} + 20		1/f_{MCK} + 30		1/f_{MCK} + 30		ns
		1.8 V ≤ EV_{DD0} ≤ 5.5 V		1/f_{MCK} + 30		1/f_{MCK} + 30		1/f_{MCK} + 30		ns
		1.7 V ≤ EV_{DD0} ≤ 5.5 V		1/f_{MCK} + 40		1/f_{MCK} + 40		1/f_{MCK} + 40		ns
		1.6 V ≤ EV_{DD0} ≤ 5.5 V		—		1/f_{MCK} + 40		1/f_{MCK} + 40		ns
SIp hold time (from SCKp↑) Note 2	t_{KSI2}	1.8 V ≤ EV_{DD0} ≤ 5.5 V		1/f_{MCK} + 31		1/f_{MCK} + 31		1/f_{MCK} + 31		ns
		1.7 V ≤ EV_{DD0} ≤ 5.5 V		1/f_{MCK} + 250		1/f_{MCK} + 250		1/f_{MCK} + 250		ns
		1.6 V ≤ EV_{DD0} ≤ 5.5 V		—		1/f_{MCK} + 250		1/f_{MCK} + 250		ns
Delay time from SCKp↓ to SOp output Note 3	t_{KSO2}	C = 30 pF Note 4	2.7 V ≤ EV_{DD0} ≤ 5.5 V		2/f_{MCK} + 44		2/f_{MCK} + 110		2/f_{MCK} + 110	ns
			2.4 V ≤ EV_{DD0} ≤ 5.5 V		2/f_{MCK} + 75		2/f_{MCK} + 110		2/f_{MCK} + 110	ns
			1.8 V ≤ EV_{DD0} ≤ 5.5 V		2/f_{MCK} + 100		2/f_{MCK} + 110		2/f_{MCK} + 110	ns
			1.7 V ≤ EV_{DD0} ≤ 5.5 V		2/f_{MCK} + 220		2/f_{MCK} + 220		2/f_{MCK} + 220	ns
			1.6 V ≤ EV_{DD0} ≤ 5.5 V		—		2/f_{MCK} + 220		2/f_{MCK} + 220	ns

Note 1. When DAPmn = 0 and CKPmn = 0, or DAPmn = 1 and CKPmn = 1. The SIp setup time becomes "to SCKp↓" when DAPmn = 0 and CKPmn = 1, or DAPmn = 1 and CKPmn = 0.

Note 2. When DAPmn = 0 and CKPmn = 0, or DAPmn = 1 and CKPmn = 1. The SIp hold time becomes "from SCKp↓" when DAPmn = 0 and CKPmn = 1, or DAPmn = 1 and CKPmn = 0.

Note 3. When DAPmn = 0 and CKPmn = 0, or DAPmn = 1 and CKPmn = 1. The delay time to SOp output becomes "from SCKp↑" when DAPmn = 0 and CKPmn = 1, or DAPmn = 1 and CKPmn = 0.

Note 4. C is the load capacitance of the SOp output lines.

Note 5. The maximum transfer rate when using the SNOOZE mode is 1 Mbps.

Caution **Select the normal input buffer for the SIp pin and SCKp pin and the normal output mode for the SOp pin by using port input mode register g (PIMg) and port output mode register g (POMg).**

Remark 1. p: CSI number (p = 00, 01, 10, 11, 20, 21), m: Unit number (m = 0, 1),
n: Channel number (n = 0 to 3), g: PIM number (g = 0, 1, 3, 5, 7)

Remark 2. f_{MCK}: Serial array unit operation clock frequency
(Operation clock to be set by the CKSmn bit of serial mode register mn (SMRmn). m: Unit number,
n: Channel number (mn = 00 to 03, 10, 11))

(4) During communication at same potential (Simplified SPI (CSI) mode) (slave mode, SCKp... external clock input)

(T_A = -40 to +85°C, 1.6 V ≤ EV_{DD0} ≤ V_{DD} ≤ 5.5 V, V_{SS} = EV_{SS0} = 0 V) **(2/2)**

Parameter	Symbol	Conditions		HS (high-speed main) mode		LS (low-speed main) mode		LV (low-voltage main) mode		Unit
				MIN.	MAX.	MIN.	MAX.	MIN.	MAX.	
$\overline{SSI00}$ setup time	t_{SSIK}	DAPmn = 0	2.7 V ≤ EV_{DD0} ≤ 5.5 V	120		120		120		ns
			1.8 V ≤ EV_{DD0} ≤ 5.5 V	200		200		200		ns
			1.7 V ≤ EV_{DD0} ≤ 5.5 V	400		400		400		ns
			1.6 V ≤ EV_{DD0} ≤ 5.5 V	—		400		400		ns
		DAPmn = 1	2.7 V ≤ EV_{DD0} ≤ 5.5 V	1/f_{MCK} + 120		1/f_{MCK} + 120		1/f_{MCK} + 120		ns
			1.8 V ≤ EV_{DD0} ≤ 5.5 V	1/f_{MCK} + 200		1/f_{MCK} + 200		1/f_{MCK} + 200		ns
			1.7 V ≤ EV_{DD0} ≤ 5.5 V	1/f_{MCK} + 400		1/f_{MCK} + 400		1/f_{MCK} + 400		ns
			1.6 V ≤ EV_{DD0} ≤ 5.5 V	—		1/f_{MCK} + 400		1/f_{MCK} + 400		ns
$\overline{SSI00}$ hold time	t_{KSSI}	DAPmn = 0	2.7 V ≤ EV_{DD0} ≤ 5.5 V	1/f_{MCK} + 120		1/f_{MCK} + 120		1/f_{MCK} + 120		ns
			1.8 V ≤ EV_{DD0} ≤ 5.5 V	1/f_{MCK} + 200		1/f_{MCK} + 200		1/f_{MCK} + 200		ns
			1.7 V ≤ EV_{DD0} ≤ 5.5 V	1/f_{MCK} + 400		1/f_{MCK} + 400		1/f_{MCK} + 400		ns
			1.6 V ≤ EV_{DD0} ≤ 5.5 V	—		1/f_{MCK} + 400		1/f_{MCK} + 400		ns
		DAPmn = 1	2.7 V ≤ EV_{DD0} ≤ 5.5 V	120		120		120		ns
			1.8 V ≤ EV_{DD0} ≤ 5.5 V	200		200		200		ns
			1.7 V ≤ EV_{DD0} ≤ 5.5 V	400		400		400		ns
			1.6 V ≤ EV_{DD0} ≤ 5.5 V	—		400		400		ns

Caution **Select the normal input buffer for the SIp pin and SCKp pin and the normal output mode for the SOp pin by using port input mode register g (PIMg) and port output mode register g (POMg).**

Remark p: CSI number (p = 00), m: Unit number (m = 0), n: Channel number (n = 0), g: PIM number (g = 3, 5)

Simplified SPI (CSI) mode connection diagram (during communication at same potential)

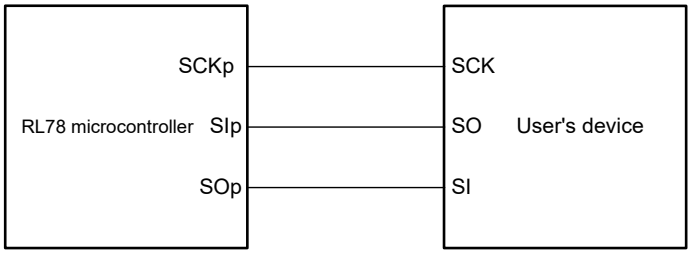

Simplified SPI (CSI) mode connection diagram (during communication at same potential)
(Slave Transmission of slave select input function (CSI00))

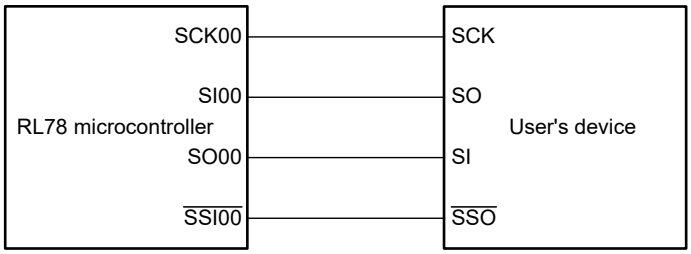

Remark 1. p: CSI number (p = 00, 01, 10, 11, 20, 21)
Remark 2. m: Unit number, n: Channel number (mn = 00 to 03, 10, 11)

Simplified SPI (CSI) mode serial transfer timing (during communication at same potential)
(When DAPmn = 0 and CKPmn = 0, or DAPmn = 1 and CKPmn = 1.)

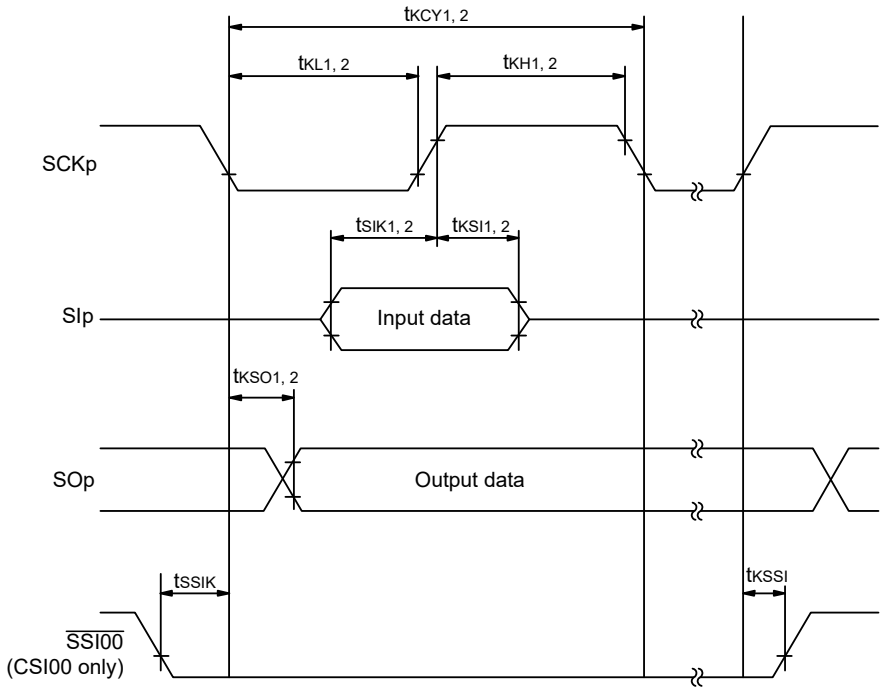

Simplified SPI (CSI) mode serial transfer timing (during communication at same potential)
(When DAPmn = 0 and CKPmn = 1, or DAPmn = 1 and CKPmn = 0.)

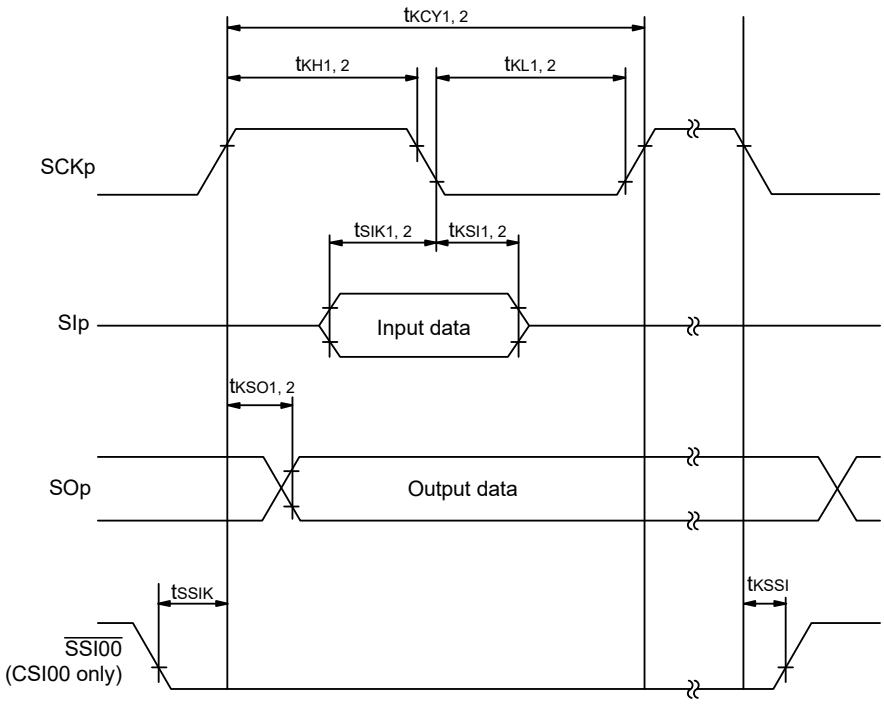

Remark 1. p: CSI number (p = 00, 01, 10, 11, 20, 21)
Remark 2. m: Unit number, n: Channel number (mn = 00 to 03, 10, 11)

(5) During communication at same potential (simplified I²C mode)

(T_A = -40 to +85°C, 1.6 V ≤ EV_{DD0} ≤ V_{DD} ≤ 5.5 V, V_{SS} = EV_{SS0} = 0 V) **(1/2)**

Parameter	Symbol	Conditions	HS (high-speed main) mode		LS (low-speed main) mode		LV (low-voltage main) mode		Unit
			MIN.	MAX.	MIN.	MAX.	MIN.	MAX.	
SCLr clock frequency	f_{SCL}	2.7 V ≤ EV_{DD0} ≤ 5.5 V, C_b = 50 pF, R_b = 2.7 kΩ		1000 Note 1		400 Note 1		400 Note 1	kHz
		1.8 V ≤ EV_{DD0} ≤ 5.5 V, C_b = 100 pF, R_b = 3 kΩ		400 Note 1		400 Note 1		400 Note 1	kHz
		1.8 V ≤ EV_{DD0} < 2.7 V, C_b = 100 pF, R_b = 5 kΩ		300 Note 1		300 Note 1		300 Note 1	kHz
		1.7 V ≤ EV_{DD0} < 1.8 V, C_b = 100 pF, R_b = 5 kΩ		250 Note 1		250 Note 1		250 Note 1	kHz
		1.6 V ≤ EV_{DD0} < 1.8 V, C_b = 100 pF, R_b = 5 kΩ		—		250 Note 1		250 Note 1	kHz
Hold time when SCLr = "L"	t_{LOW}	2.7 V ≤ EV_{DD0} ≤ 5.5 V, C_b = 50 pF, R_b = 2.7 kΩ	475		1150		1150		ns
		1.8 V ≤ EV_{DD0} ≤ 5.5 V, C_b = 100 pF, R_b = 3 kΩ	1150		1150		1150		ns
		1.8 V ≤ EV_{DD0} < 2.7 V, C_b = 100 pF, R_b = 5 kΩ	1550		1550		1550		ns
		1.7 V ≤ EV_{DD0} < 1.8 V, C_b = 100 pF, R_b = 5 kΩ	1850		1850		1850		ns
		1.6 V ≤ EV_{DD0} < 1.8 V, C_b = 100 pF, R_b = 5 kΩ	—		1850		1850		ns
Hold time when SCLr = "H"	t_{HIGH}	2.7 V ≤ EV_{DD0} ≤ 5.5 V, C_b = 50 pF, R_b = 2.7 kΩ	475		1150		1150		ns
		1.8 V ≤ EV_{DD0} ≤ 5.5 V, C_b = 100 pF, R_b = 3 kΩ	1150		1150		1150		ns
		1.8 V ≤ EV_{DD0} < 2.7 V, C_b = 100 pF, R_b = 5 kΩ	1550		1550		1550		ns
		1.7 V ≤ EV_{DD0} < 1.8 V, C_b = 100 pF, R_b = 5 kΩ	1850		1850		1850		ns
		1.6 V ≤ EV_{DD0} < 1.8 V, C_b = 100 pF, R_b = 5 kΩ	—		1850		1850		ns

(**Notes** and **Caution** are listed on the next page, and **Remarks** are listed on the page after the next page.)

(5) During communication at same potential (simplified I²C mode)

(T_A = -40 to +85°C, 1.6 V ≤ EV_{DD0} ≤ V_{DD} ≤ 5.5 V, V_{SS} = EV_{SS0} = 0 V) **(2/2)**

Parameter	Symbol	Conditions	HS (high-speed main) mode		LS (low-speed main) mode		LV (low-voltage main) mode		Unit
			MIN.	MAX.	MIN.	MAX.	MIN.	MAX.	
Data setup time (reception)	$t_{SU: DAT}$	2.7 V ≤ EV_{DD0} ≤ 5.5 V, C_b = 50 pF, R_b = 2.7 kΩ	$1/f_{MCK}$ + 85 Note 2		$1/f_{MCK}$ + 145 Note 2		$1/f_{MCK}$ + 145 Note 2		ns
		1.8 V ≤ EV_{DD0} ≤ 5.5 V, C_b = 100 pF, R_b = 3 kΩ	$1/f_{MCK}$ + 145 Note 2		$1/f_{MCK}$ + 145 Note 2		$1/f_{MCK}$ + 145 Note 2		ns
		1.8 V ≤ EV_{DD0} < 2.7 V, C_b = 100 pF, R_b = 5 kΩ	$1/f_{MCK}$ + 230 Note 2		$1/f_{MCK}$ + 230 Note 2		$1/f_{MCK}$ + 230 Note 2		ns
		1.7 V ≤ EV_{DD0} < 1.8 V, C_b = 100 pF, R_b = 5 kΩ	$1/f_{MCK}$ + 290 Note 2		$1/f_{MCK}$ + 290 Note 2		$1/f_{MCK}$ + 290 Note 2		ns
		1.6 V ≤ EV_{DD0} < 1.8 V, C_b = 100 pF, R_b = 5 kΩ	—		$1/f_{MCK}$ + 290 Note 2		$1/f_{MCK}$ + 290 Note 2		ns
Data hold time (transmission)	$t_{HD: DAT}$	2.7 V ≤ EV_{DD0} ≤ 5.5 V, C_b = 50 pF, R_b = 2.7 kΩ	0	305	0	305	0	305	ns
		1.8 V ≤ EV_{DD0} ≤ 5.5 V, C_b = 100 pF, R_b = 3 kΩ	0	355	0	355	0	355	ns
		1.8 V ≤ EV_{DD0} < 2.7 V, C_b = 100 pF, R_b = 5 kΩ	0	405	0	405	0	405	ns
		1.7 V ≤ EV_{DD0} < 1.8 V, C_b = 100 pF, R_b = 5 kΩ	0	405	0	405	0	405	ns
		1.6 V ≤ EV_{DD0} < 1.8 V, C_b = 100 pF, R_b = 5 kΩ	—		0	405	0	405	ns

Note 1. The value must also be equal to or less than f_{MCK}/4.

Note 2. Set the f_{MCK} value to keep the hold time of SCLr = "L" and SCLr = "H".

Caution Select the normal input buffer and the N-ch open drain output (V_{DD} tolerance (for the 48-, 32-, 24-pin products)/EV_{DD} tolerance (for the 64-, 36-pin products)) mode for the SDAr pin and the normal output mode for the SCLr pin by using port input mode register g (PIMg) and port output mode register h (POMh).

(**Remarks** are listed on the next page.)

Simplified I²C mode connection diagram (during communication at same potential)

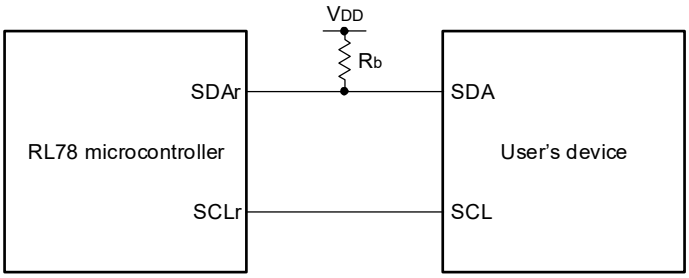

Simplified I²C mode serial transfer timing (during communication at same potential)

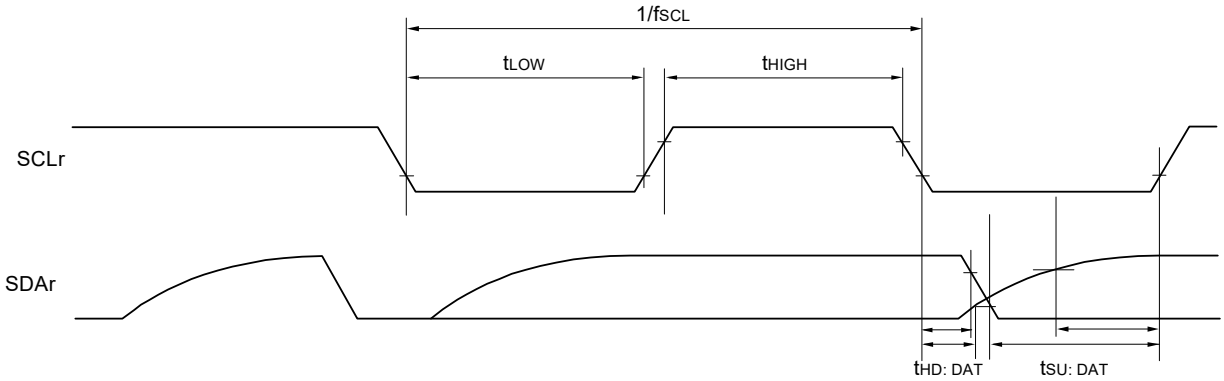

Remark 1. R_b[Ω]: Communication line (SDAr) pull-up resistance, C_b[F]: Communication line (SDAr, SCLr) load capacitance

Remark 2. r: IIC number (r = 00, 01, 10, 11, 20, 21), g: PIM number (g = 0, 1, 3, 5, 7),
h: POM number (h = 0, 1, 3, 5, 7)

Remark 3. f_{MCK}: Serial array unit operation clock frequency
(Operation clock to be set by the CKSmn bit of serial mode register mn (SMRmn). m: Unit number (m = 0, 1),
n: Channel number (n = 0 to 3), mn = 00 to 03, 10, 11)

(6) Communication at different potential (1.8 V, 2.5 V, 3 V) (UART mode)

(T_A = -40 to +85°C, 1.8 V ≤ EV_{DD0} ≤ V_{DD} ≤ 5.5 V, V_{SS} = EV_{SS0} = 0 V) **(1/2)**

Parameter	Symbol	Conditions		HS (high-speed main) mode		LS (low-speed main) mode		LV (low-voltage main) mode		Unit
				MIN.	MAX.	MIN.	MAX.	MIN.	MAX.	
Transfer rate		reception	4.0 V ≤ EV_{DD0} ≤ 5.5 V, 2.7 V ≤ V_b ≤ 4.0 V		f_{MCK}/6 Note 1		f_{MCK}/6 Note 1		f_{MCK}/6 Note 1	bps
			Theoretical value of the maximum transfer rate f_{MCK} = f_{CLK} Note 4		5.3		1.3		0.6	Mbps
			2.7 V ≤ EV_{DD0} < 4.0 V, 2.3 V ≤ V_b ≤ 2.7 V		f_{MCK}/6 Note 1		f_{MCK}/6 Note 1		f_{MCK}/6 Note 1	bps
			Theoretical value of the maximum transfer rate f_{MCK} = f_{CLK} Note 4		5.3		1.3		0.6	Mbps
			1.8 V ≤ EV_{DD0} < 3.3 V, 1.6 V ≤ V_b ≤ 2.0 V		f_{MCK}/6 Notes 1, 2, 3		f_{MCK}/6 Notes 1, 2		f_{MCK}/6 Notes 1, 2	bps
			Theoretical value of the maximum transfer rate f_{MCK} = f_{CLK} Note 4		5.3		1.3		0.6	Mbps

Note 1. Transfer rate in the SNOOZE mode is 4800 bps only.
However, the SNOOZE mode cannot be used when FRQSEL4 = 1.

Note 2. Use it with EV_{DD0} ≥ V_b.

Note 3. The following conditions are required for low voltage interface when EV_{DD0} < V_{DD}.
2.4 V ≤ EV_{DD0} < 2.7 V: MAX. 2.6 Mbps
1.8 V ≤ EV_{DD0} < 2.4 V: MAX. 1.3 Mbps

Note 4. The maximum operating frequencies of the CPU/peripheral hardware clock (f_{CLK}) are:
HS (high-speed main) mode: 32 MHz (2.7 V ≤ V_{DD} ≤ 5.5 V)
16 MHz (2.4 V ≤ V_{DD} ≤ 5.5 V)
LS (low-speed main) mode: 8 MHz (1.8 V ≤ V_{DD} ≤ 5.5 V)
LV (low-voltage main) mode: 4 MHz (1.6 V ≤ V_{DD} ≤ 5.5 V)

Caution **Select the TTL input buffer for the RxDq pin and the N-ch open drain output (V_{DD} tolerance (for the 48-, 32-, 24-pin products)/EV_{DD} tolerance (for the 64-, 36-pin products)) mode for the TxDq pin by using port input mode register g (PIMg) and port output mode register g (POMg). For V_{IH} and V_{IL}, see the DC characteristics with TTL input buffer selected.**

Remark 1. V_b [V]: Communication line voltage

Remark 2. q: UART number (q = 0 to 2), g: PIM and POM number (g = 0, 1, 5, 7)

Remark 3. f_{MCK}: Serial array unit operation clock frequency
(Operation clock to be set by the CKSmn bit of serial mode register mn (SMRmn). m: Unit number, n: Channel number (mn = 00 to 03, 10, 11)

Remark 4. UART2 cannot communicate at different potential when bit 1 (PIOR01) of peripheral I/O redirection register 0 (PIOR0) is 1.

(6) Communication at different potential (1.8 V, 2.5 V, 3 V) (UART mode)

(T_A = -40 to +85°C, 1.8 V ≤ EV_{DD0} ≤ V_{DD} ≤ 5.5 V, V_{SS} = EV_{SS0} = 0 V) **(2/2)**

Parameter	Symbol	Conditions		HS (high-speed main) mode		LS (low-speed main) mode		LV (low-voltage main) mode		Unit
				MIN.	MAX.	MIN.	MAX.	MIN.	MAX.	
Transfer rate		transmission	4.0 V ≤ EV_{DD0} ≤ 5.5 V, 2.7 V ≤ V_b ≤ 4.0 V		Note 1		Note 1		Note 1	bps
			Theoretical value of the maximum transfer rate C_b = 50 pF, R_b = 1.4 kΩ, V_b = 2.7 V		2.8 Note 2		2.8 Note 2		2.8 Note 2	Mbps
			2.7 V ≤ EV_{DD0} < 4.0 V, 2.3 V ≤ V_b ≤ 2.7 V		Note 3		Note 3		Note 3	bps
			Theoretical value of the maximum transfer rate C_b = 50 pF, R_b = 2.7 kΩ, V_b = 2.3 V		1.2 Note 4		1.2 Note 4		1.2 Note 4	Mbps
			1.8 V ≤ EV_{DD0} < 3.3 V, 1.6 V ≤ V_b ≤ 2.0 V		Notes 5, 6		Notes 5, 6		Notes 5, 6	bps
			Theoretical value of the maximum transfer rate C_b = 50 pF, R_b = 5.5 kΩ, V_b = 1.6 V		0.43 Note 7		0.43 Note 7		0.43 Note 7	Mbps

Note 1. The smaller maximum transfer rate derived by using f_{MCK}/6 or the following expression is the valid maximum transfer rate.
Expression for calculating the transfer rate when 4.0 V ≤ EV_{DD0} ≤ 5.5 V and 2.7 V ≤ V_b ≤ 4.0 V

$$\text{Maximum transfer rate} = \frac{1}{\{-C_b \times R_b \times \ln(1 - \frac{2.2}{V_b})\} \times 3} \text{ [bps]}$$

$$\text{Baud rate error (theoretical value)} = \frac{\frac{1}{\text{Transfer rate} \times 2} - \{-C_b \times R_b \times \ln(1 - \frac{2.2}{V_b})\}}{(\frac{1}{\text{Transfer rate}}) \times \text{Number of transferred bits}} \times 100 \text{ [\%]}$$

* This value is the theoretical value of the relative difference between the transmission and reception sides.

Note 2. This value as an example is calculated when the conditions described in the “Conditions” column are met.
Refer to **Note 1** above to calculate the maximum transfer rate under conditions of the customer.

Note 3. The smaller maximum transfer rate derived by using f_{MCK}/6 or the following expression is the valid maximum transfer rate.
Expression for calculating the transfer rate when 2.7 V ≤ EV_{DD0} < 4.0 V and 2.3 V ≤ V_b ≤ 2.7 V

$$\text{Maximum transfer rate} = \frac{1}{\{-C_b \times R_b \times \ln(1 - \frac{2.0}{V_b})\} \times 3} \text{ [bps]}$$

$$\text{Baud rate error (theoretical value)} = \frac{\frac{1}{\text{Transfer rate} \times 2} - \{-C_b \times R_b \times \ln(1 - \frac{2.0}{V_b})\}}{(\frac{1}{\text{Transfer rate}}) \times \text{Number of transferred bits}} \times 100 \text{ [\%]}$$

* This value is the theoretical value of the relative difference between the transmission and reception sides.

Note 4. This value as an example is calculated when the conditions described in the “Conditions” column are met.
Refer to **Note 3** above to calculate the maximum transfer rate under conditions of the customer.

Note 5. Use it with EV_{DD0} ≥ V_b.

Note 6. The smaller maximum transfer rate derived by using $f_{MCK}/6$ or the following expression is the valid maximum transfer rate.

Expression for calculating the transfer rate when 1.8 V ≤ EV_{DD0} < 3.3 V and 1.6 V ≤ V_b ≤ 2.0 V

$$\text{Maximum transfer rate} = \frac{1}{\{-C_b \times R_b \times \ln(1 - \frac{1.5}{V_b})\} \times 3} \text{ [bps]}$$

$$\text{Baud rate error (theoretical value)} = \frac{\frac{1}{\text{Transfer rate} \times 2} - \{-C_b \times R_b \times \ln(1 - \frac{1.5}{V_b})\}}{(\frac{1}{\text{Transfer rate}}) \times \text{Number of transferred bits}} \times 100 \text{ [\%]}$$

* This value is the theoretical value of the relative difference between the transmission and reception sides.

Note 7. This value as an example is calculated when the conditions described in the “Conditions” column are met.
Refer to **Note 6** above to calculate the maximum transfer rate under conditions of the customer.

Caution **Select the TTL input buffer for the RxDq pin and the N-ch open drain output (V_{DD} tolerance (for the 48-, 32-, 24-pin products)/EV_{DD} tolerance (for the 64-, 36-pin products)) mode for the TxDq pin by using port input mode register g (PIMg) and port output mode register g (POMg). For V_{IH} and V_{IL}, see the DC characteristics with TTL input buffer selected.**

(**Remarks** are listed on the next page.)

UART mode connection diagram (during communication at different potential)

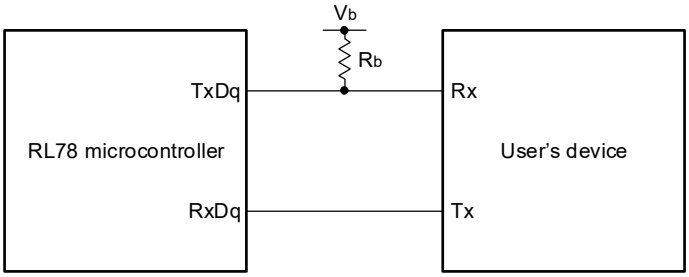

UART mode bit width (during communication at different potential) (reference)

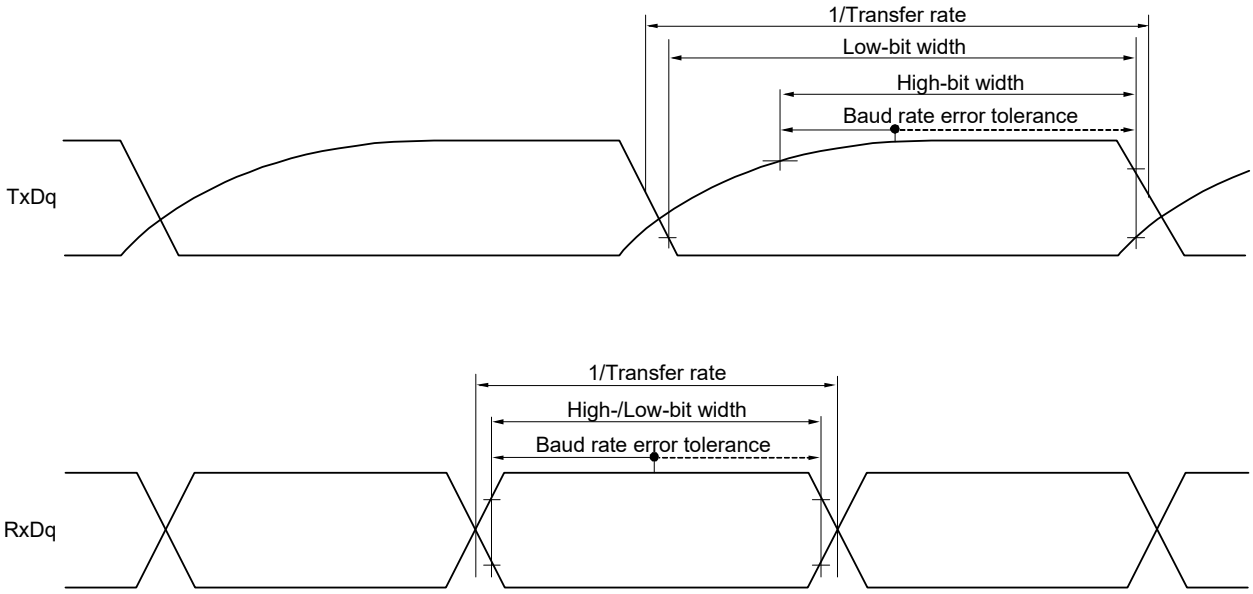

Remark 1. R_b[Ω]: Communication line (TxDq) pull-up resistance,
C_b[F]: Communication line (TxDq) load capacitance, V_b[V]: Communication line voltage

Remark 2. q: UART number (q = 0 to 2), g: PIM and POM number (g = 0, 1, 5, 7)

Remark 3. f_{MCK}: Serial array unit operation clock frequency
(Operation clock to be set by the CKSmn bit of serial mode register mn (SMRmn).
m: Unit number, n: Channel number (mn = 00 to 03, 10, 11))

Remark 4. UART2 cannot communicate at different potential when bit 1 (PIOR01) of peripheral I/O redirection register 0 (PIOR0) is 1.

(7) Communication at different potential (2.5 V, 3 V) (Simplified SPI (CSI) mode) (master mode, SCKp... internal clock output, corresponding CSI00 only)

(T_A = -40 to +85°C, 2.7 V ≤ EV_{DD0} ≤ V_{DD} ≤ 5.5 V, V_{SS} = EV_{SS0} = 0 V) **(1/2)**

Parameter	Symbol	Conditions		HS (high-speed main) mode		LS (low-speed main) mode		LV (low-voltage main) mode		Unit
				MIN.	MAX.	MIN.	MAX.	MIN.	MAX.	
SCKp cycle time	t_{KCY1}	t_{KCY1} ≥ 2/f_{CLK}	4.0 V ≤ EV_{DD0} ≤ 5.5 V, 2.7 V ≤ V_b ≤ 4.0 V, C_b = 20 pF, R_b = 1.4 kΩ	200		1150		1150		ns
			2.7 V ≤ EV_{DD0} < 4.0 V, 2.3 V ≤ V_b ≤ 2.7 V, C_b = 20 pF, R_b = 2.7 kΩ	300		1150		1150		ns
SCKp high-level width	t_{KH1}	4.0 V ≤ EV_{DD0} ≤ 5.5 V, 2.7 V ≤ V_b ≤ 4.0 V, C_b = 20 pF, R_b = 1.4 kΩ		t_{KCY1}/2 - 50		t_{KCY1}/2 - 50		t_{KCY1}/2 - 50		ns
		2.7 V ≤ EV_{DD0} < 4.0 V, 2.3 V ≤ V_b ≤ 2.7 V, C_b = 20 pF, R_b = 2.7 kΩ		t_{KCY1}/2 - 120		t_{KCY1}/2 - 120		t_{KCY1}/2 - 120		ns
SCKp low-level width	t_{KL1}	4.0 V ≤ EV_{DD0} ≤ 5.5 V, 2.7 V ≤ V_b ≤ 4.0 V, C_b = 20 pF, R_b = 1.4 kΩ		t_{KCY1}/2 - 7		t_{KCY1}/2 - 50		t_{KCY1}/2 - 50		ns
		2.7 V ≤ EV_{DD0} < 4.0 V, 2.3 V ≤ V_b ≤ 2.7 V, C_b = 20 pF, R_b = 2.7 kΩ		t_{KCY1}/2 - 10		t_{KCY1}/2 - 50		t_{KCY1}/2 - 50		ns
SIp setup time (to SCKp↑) Note 1	t_{SIK1}	4.0 V ≤ EV_{DD0} ≤ 5.5 V, 2.7 V ≤ V_b ≤ 4.0 V, C_b = 20 pF, R_b = 1.4 kΩ		58		479		479		ns
		2.7 V ≤ EV_{DD0} < 4.0 V, 2.3 V ≤ V_b ≤ 2.7 V, C_b = 20 pF, R_b = 2.7 kΩ		121		479		479		ns
SIp hold time (from SCKp↑) Note 1	t_{KSI1}	4.0 V ≤ EV_{DD0} ≤ 5.5 V, 2.7 V ≤ V_b ≤ 4.0 V, C_b = 20 pF, R_b = 1.4 kΩ		10		10		10		ns
		2.7 V ≤ EV_{DD0} < 4.0 V, 2.3 V ≤ V_b ≤ 2.7 V, C_b = 20 pF, R_b = 2.7 kΩ		10		10		10		ns
Delay time from SCKp↓ to SOp output Note 1	t_{KSO1}	4.0 V ≤ EV_{DD0} ≤ 5.5 V, 2.7 V ≤ V_b ≤ 4.0 V, C_b = 20 pF, R_b = 1.4 kΩ			60		60		60	ns
		2.7 V ≤ EV_{DD0} < 4.0 V, 2.3 V ≤ V_b ≤ 2.7 V, C_b = 20 pF, R_b = 2.7 kΩ			130		130		130	ns

(**Notes**, **Caution**, and **Remarks** are listed on the next page.)

(7) Communication at different potential (2.5 V, 3 V) (Simplified SPI (CSI) mode) (master mode, SCKp... internal clock output, corresponding CSI00 only)

(T_A = -40 to +85°C, 2.7 V ≤ EV_{DD0} ≤ V_{DD} ≤ 5.5 V, V_{SS} = EV_{SS0} = 0 V) **(2/2)**

Parameter	Symbol	Conditions	HS (high-speed main) mode		LS (low-speed main) mode		LV (low-voltage main) mode		Unit
			MIN.	MAX.	MIN.	MAX.	MIN.	MAX.	
SIp setup time (to SCKp↓) Note 2	t_{SIK1}	4.0 V ≤ EV_{DD0} ≤ 5.5 V, 2.7 V ≤ V_b ≤ 4.0 V, C_b = 20 pF, R_b = 1.4 kΩ	23		110		110		ns
		2.7 V ≤ EV_{DD0} < 4.0 V, 2.3 V ≤ V_b ≤ 2.7 V, C_b = 20 pF, R_b = 2.7 kΩ	33		110		110		ns
SIp hold time (from SCKp↓) Note 2	t_{KSI1}	4.0 V ≤ EV_{DD0} ≤ 5.5 V, 2.7 V ≤ V_b ≤ 4.0 V, C_b = 20 pF, R_b = 1.4 kΩ	10		10		10		ns
		2.7 V ≤ EV_{DD0} < 4.0 V, 2.3 V ≤ V_b ≤ 2.7 V, C_b = 20 pF, R_b = 2.7 kΩ	10		10		10		ns
Delay time from SCKp↑ to SOp output Note 2	t_{KSO1}	4.0 V ≤ EV_{DD0} ≤ 5.5 V, 2.7 V ≤ V_b ≤ 4.0 V, C_b = 20 pF, R_b = 1.4 kΩ		10		10		10	ns
		2.7 V ≤ EV_{DD0} < 4.0 V, 2.3 V ≤ V_b ≤ 2.7 V, C_b = 20 pF, R_b = 2.7 kΩ		10		10		10	ns

Note 1. When DAPmn = 0 and CKPmn = 0, or DAPmn = 1 and CKPmn = 1.

Note 2. When DAPmn = 0 and CKPmn = 1, or DAPmn = 1 and CKPmn = 0.

Caution **Select the TTL input buffer for the SIp pin and the N-ch open drain output (V_{DD} tolerance (for the 48-, 32-, 24-pin products)/EV_{DD} tolerance (for the 64-, 36-pin products)) mode for the SOp pin and SCKp pin by using port input mode register g (PIMg) and port output mode register g (POMg). For V_{IH} and V_{IL}, see the DC characteristics with TTL input buffer selected.**

Remark 1. R_b[Ω]: Communication line (SCKp, SOp) pull-up resistance, C_b[F]: Communication line (SCKp, SOp) load capacitance, V_b[V]: Communication line voltage

Remark 2. p: CSI number (p = 00), m: Unit number (m = 0), n: Channel number (n = 0), g: PIM and POM number (g = 3, 5)

Remark 3. f_{MCK}: Serial array unit operation clock frequency
(Operation clock to be set by the CKSmn bit of serial mode register mn (SMRmn). m: Unit number, n: Channel number (mn = 00))

Remark 4. This value is valid only when CSI00's peripheral I/O redirect function is not used.

(8) Communication at different potential (1.8 V, 2.5 V, 3 V) (Simplified SPI (CSI) mode) (master mode, SCKp... internal clock output)

(T_A = -40 to +85°C, 1.8 V ≤ EV_{DD0} ≤ V_{DD} ≤ 5.5 V, V_{SS} = EV_{SS0} = 0 V) **(1/3)**

Parameter	Symbol	Conditions		HS (high-speed main) mode		LS (low-speed main) mode		LV (low-voltage main) mode		Unit
				MIN.	MAX.	MIN.	MAX.	MIN.	MAX.	
SCKp cycle time	t_{KCY1}	t_{KCY1} ≥ 4/f_{CLK}	4.0 V ≤ EV_{DD0} ≤ 5.5 V, 2.7 V ≤ V_b ≤ 4.0 V, C_b = 30 pF, R_b = 1.4 kΩ	300		1150		1150		ns
			2.7 V ≤ EV_{DD0} < 4.0 V, 2.3 V ≤ V_b ≤ 2.7 V, C_b = 30 pF, R_b = 2.7 kΩ	500		1150		1150		ns
			1.8 V ≤ EV_{DD0} < 3.3 V, 1.6 V ≤ V_b ≤ 2.0 V Note, C_b = 30 pF, R_b = 5.5 kΩ	1150		1150		1150		ns
SCKp high-level width	t_{KH1}	4.0 V ≤ EV_{DD0} ≤ 5.5 V, 2.7 V ≤ V_b ≤ 4.0 V, C_b = 30 pF, R_b = 1.4 kΩ		t_{KCY1}/2 - 75		t_{KCY1}/2 - 75		t_{KCY1}/2 - 75		ns
		2.7 V ≤ EV_{DD0} < 4.0 V, 2.3 V ≤ V_b ≤ 2.7 V, C_b = 30 pF, R_b = 2.7 kΩ		t_{KCY1}/2 - 170		t_{KCY1}/2 - 170		t_{KCY1}/2 - 170		ns
		1.8 V ≤ EV_{DD0} < 3.3 V, 1.6 V ≤ V_b ≤ 2.0 V Note, C_b = 30 pF, R_b = 5.5 kΩ		t_{KCY1}/2 - 458		t_{KCY1}/2 - 458		t_{KCY1}/2 - 458		ns
SCKp low-level width	t_{KL1}	4.0 V ≤ EV_{DD0} ≤ 5.5 V, 2.7 V ≤ V_b ≤ 4.0 V, C_b = 30 pF, R_b = 1.4 kΩ		t_{KCY1}/2 - 12		t_{KCY1}/2 - 50		t_{KCY1}/2 - 50		ns
		2.7 V ≤ EV_{DD0} < 4.0 V, 2.3 V ≤ V_b ≤ 2.7 V, C_b = 30 pF, R_b = 2.7 kΩ		t_{KCY1}/2 - 18		t_{KCY1}/2 - 50		t_{KCY1}/2 - 50		ns
		1.8 V ≤ EV_{DD0} < 3.3 V, 1.6 V ≤ V_b ≤ 2.0 V Note, C_b = 30 pF, R_b = 5.5 kΩ		t_{KCY1}/2 - 50		t_{KCY1}/2 - 50		t_{KCY1}/2 - 50		ns

Note Use it with EV_{DD0} ≥ V_b.

Caution **Select the TTL input buffer for the SIp pin and the N-ch open drain output (V_{DD} tolerance (for the 48-, 32-, 24-pin products)/EV_{DD} tolerance (for the 64-, 36-pin products)) mode for the SOp pin and SCKp pin by using port input mode register g (PIMg) and port output mode register g (POMg). For V_{IH} and V_{IL}, see the DC characteristics with TTL input buffer selected.**

(**Remarks** are listed two pages after the next page.)

(8) Communication at different potential (1.8 V, 2.5 V, 3 V) (Simplified SPI (CSI) mode) (master mode, SCKp... internal clock output)

(T_A = -40 to +85°C, 1.8 V ≤ EV_{DD0} ≤ V_{DD} ≤ 5.5 V, V_{SS} = EV_{SS0} = 0 V) **(2/3)**

Parameter	Symbol	Conditions	HS (high-speed main) mode		LS (low-speed main) mode		LV (low-voltage main) mode		Unit
			MIN.	MAX.	MIN.	MAX.	MIN.	MAX.	
SIp setup time (to SCKp↑) Note 1	t_{SIK1}	4.0 V ≤ EV_{DD0} ≤ 5.5 V, 2.7 V ≤ V_b ≤ 4.0 V, C_b = 30 pF, R_b = 1.4 kΩ	81		479		479		ns
		2.7 V ≤ EV_{DD0} < 4.0 V, 2.3 V ≤ V_b ≤ 2.7 V, C_b = 30 pF, R_b = 2.7 kΩ	177		479		479		ns
		1.8 V ≤ EV_{DD0} < 3.3 V, 1.6 V ≤ V_b ≤ 2.0 V Note 2, C_b = 30 pF, R_b = 5.5 kΩ	479		479		479		ns
SIp hold time (from SCKp↑) Note 1	t_{KSI1}	4.0 V ≤ EV_{DD0} ≤ 5.5 V, 2.7 V ≤ V_b ≤ 4.0 V, C_b = 30 pF, R_b = 1.4 kΩ	19		19		19		ns
		2.7 V ≤ EV_{DD0} < 4.0 V, 2.3 V ≤ V_b ≤ 2.7 V, C_b = 30 pF, R_b = 2.7 kΩ	19		19		19		ns
		1.8 V ≤ EV_{DD0} < 3.3 V, 1.6 V ≤ V_b ≤ 2.0 V Note 2, C_b = 30 pF, R_b = 5.5 kΩ	19		19		19		ns
Delay time from SCKp↓ to SOp output Note 1	t_{KSO1}	4.0 V ≤ EV_{DD0} ≤ 5.5 V, 2.7 V ≤ V_b ≤ 4.0 V, C_b = 30 pF, R_b = 1.4 kΩ		100		100		100	ns
		2.7 V ≤ EV_{DD0} < 4.0 V, 2.3 V ≤ V_b ≤ 2.7 V, C_b = 30 pF, R_b = 2.7 kΩ		195		195		195	ns
		1.8 V ≤ EV_{DD0} < 3.3 V, 1.6 V ≤ V_b ≤ 2.0 V Note 2, C_b = 30 pF, R_b = 5.5 kΩ		483		483		483	ns

Note 1. When DAPmn = 0 and CKPmn = 0, or DAPmn = 1 and CKPmn = 1.

Note 2. Use it with EV_{DD0} ≥ V_b.

Caution **Select the TTL input buffer for the SIp pin and the N-ch open drain output (V_{DD} tolerance (for the 48-, 32-, 24-pin products)/EV_{DD} tolerance (for the 64-, 36-pin products)) mode for the SOp pin and SCKp pin by using port input mode register g (PIMg) and port output mode register g (POMg). For V_{IH} and V_{IL}, see the DC characteristics with TTL input buffer selected.**

(**Remarks** are listed on the page after the next page.)

(8) Communication at different potential (1.8 V, 2.5 V, 3 V) (Simplified SPI (CSI) mode) (master mode, SCKp... internal clock output)

(T_A = -40 to +85°C, 1.8 V ≤ EV_{DD0} ≤ V_{DD} ≤ 5.5 V, V_{SS} = EV_{SS0} = 0 V) **(3/3)**

Parameter	Symbol	Conditions	HS (high-speed main) mode		LS (low-speed main) mode		LV (low-voltage main) mode		Unit
			MIN.	MAX.	MIN.	MAX.	MIN.	MAX.	
SIp setup time (to SCKp↓) Note 1	t_{SIK1}	4.0 V ≤ EV_{DD0} ≤ 5.5 V, 2.7 V ≤ V_b ≤ 4.0 V, C_b = 30 pF, R_b = 1.4 kΩ	44		110		110		ns
		2.7 V ≤ EV_{DD0} < 4.0 V, 2.3 V ≤ V_b ≤ 2.7 V, C_b = 30 pF, R_b = 2.7 kΩ	44		110		110		ns
		1.8 V ≤ EV_{DD0} < 3.3 V, 1.6 V ≤ V_b ≤ 2.0 V Note 2, C_b = 30 pF, R_b = 5.5 kΩ	110		110		110		ns
SIp hold time (from SCKp↓) Note 1	t_{KSI1}	4.0 V ≤ EV_{DD0} ≤ 5.5 V, 2.7 V ≤ V_b ≤ 4.0 V, C_b = 30 pF, R_b = 1.4 kΩ	19		19		19		ns
		2.7 V ≤ EV_{DD0} < 4.0 V, 2.3 V ≤ V_b ≤ 2.7 V, C_b = 30 pF, R_b = 2.7 kΩ	19		19		19		ns
		1.8 V ≤ EV_{DD0} < 3.3 V, 1.6 V ≤ V_b ≤ 2.0 V Note 2, C_b = 30 pF, R_b = 5.5 kΩ	19		19		19		ns
Delay time from SCKp↑ to SOp output Note 1	t_{KSO1}	4.0 V ≤ EV_{DD0} ≤ 5.5 V, 2.7 V ≤ V_b ≤ 4.0 V, C_b = 30 pF, R_b = 1.4 kΩ		25		25		25	ns
		2.7 V ≤ EV_{DD0} < 4.0 V, 2.3 V ≤ V_b ≤ 2.7 V, C_b = 30 pF, R_b = 2.7 kΩ		25		25		25	ns
		1.8 V ≤ EV_{DD0} < 3.3 V, 1.6 V ≤ V_b ≤ 2.0 V Note 2, C_b = 30 pF, R_b = 5.5 kΩ		25		25		25	ns

Note 1. When DAPmn = 0 and CKPmn = 1, or DAPmn = 1 and CKPmn = 0.

Note 2. Use it with EV_{DD0} ≥ V_b.

Caution **Select the TTL input buffer for the SIp pin and the N-ch open drain output (V_{DD} tolerance (for the 48-, 32-, 24-pin products)/EV_{DD} tolerance (for the 64-, 36-pin products)) mode for the SOp pin and SCKp pin by using port input mode register g (PIMg) and port output mode register g (POMg). For V_{IH} and V_{IL}, see the DC characteristics with TTL input buffer selected.**

(**Remarks** are listed on the next page.)

Simplified SPI (CSI) mode connection diagram (during communication at different potential)

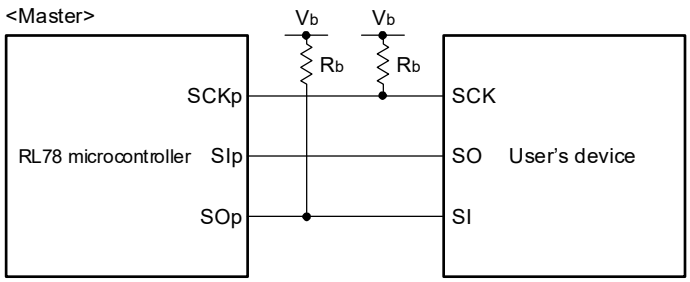

Remark 1. R_b[Ω]: Communication line (SCKp, SOp) pull-up resistance, C_b[F]: Communication line (SCKp, SOp) load capacitance, V_b[V]: Communication line voltage

Remark 2. p: CSI number (p = 00, 01, 10, 20), m: Unit number (m = 0, 1), n: Channel number (n = 0 to 3), g: PIM and POM number (g = 0, 1, 3, 5, 7)

Remark 3. f_{MCK}: Serial array unit operation clock frequency (Operation clock to be set by the CKSmn bit of serial mode register mn (SMRmn). m: Unit number, n: Channel number (mn = 00))

Remark 4. CSI01 of 48-, 64-pin products, and CSI11 and CSI21 cannot communicate at different potential. Use other CSI for communication at different potential.

Simplified SPI (CSI) mode serial transfer timing (master mode) (during communication at different potential)
(When DAPmn = 0 and CKPmn = 0, or DAPmn = 1 and CKPmn = 1.)

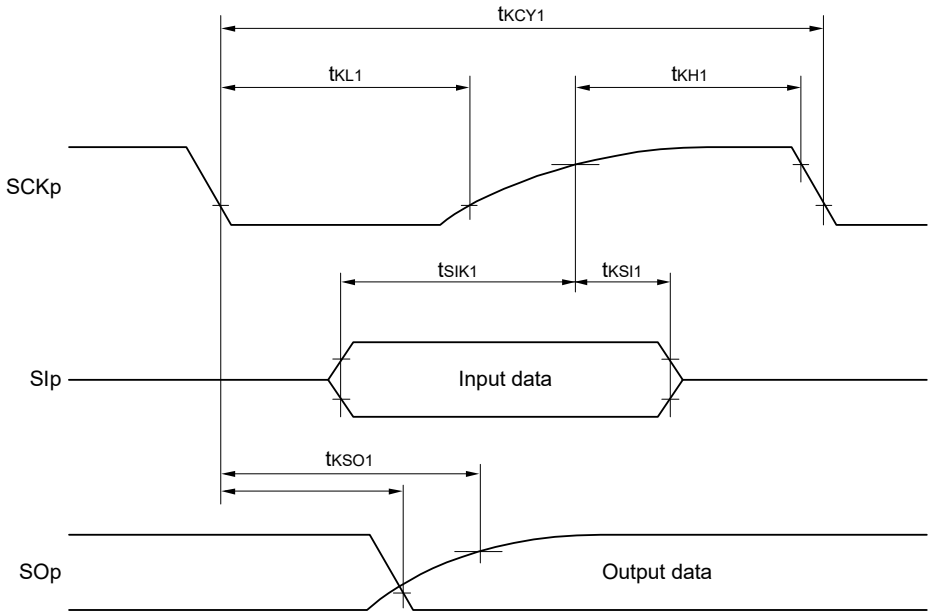

Simplified SPI (CSI) mode serial transfer timing (master mode) (during communication at different potential)
(When DAPmn = 0 and CKPmn = 1, or DAPmn = 1 and CKPmn = 0.)

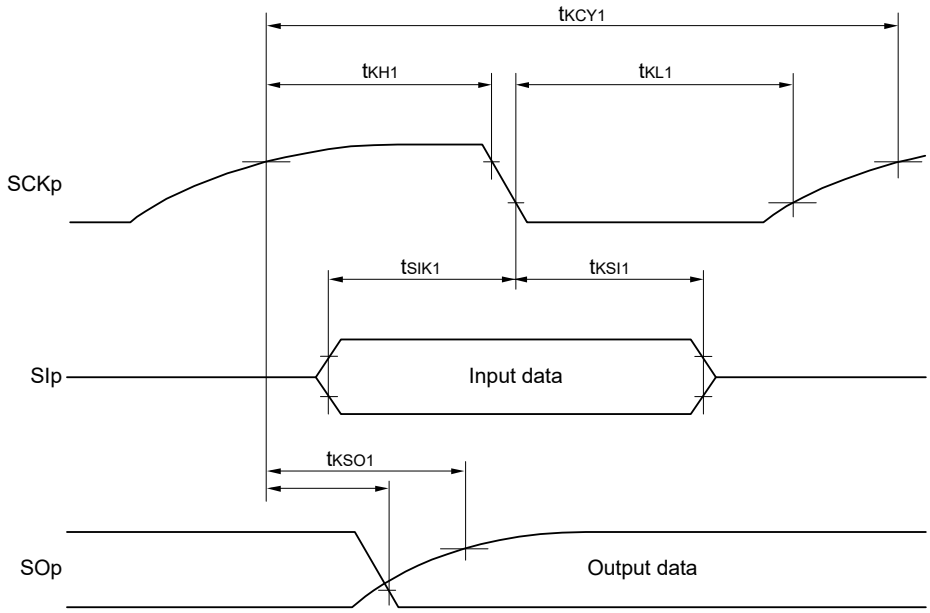

Remark 1. p: CSI number (p = 00, 01, 10, 20), m: Unit number (m = 0, 1), n: Channel number (n = 0 to 3), g: PIM and POM number (g = 0, 1, 3, 5, 7)

Remark 2. CSI01 of 48-, 64-pin products, and CSI11 and CSI21 cannot communicate at different potential. Use other CSI for communication at different potential.

(9) Communication at different potential (1.8 V, 2.5 V, 3 V) (Simplified SPI (CSI) mode) (slave mode, SCKp... external clock input)

(T_A = -40 to +85°C, 1.8 V ≤ EV_{DD0} ≤ V_{DD} ≤ 5.5 V, V_{SS} = EV_{SS0} = 0 V)

Parameter	Symbol	Conditions		HS (high-speed main) mode		LS (low-speed main) mode		LV (low-voltage main) mode		Unit
				MIN.	MAX.	MIN.	MAX.	MIN.	MAX.	
SCKp cycle time Note 1	t_{KCY2}	4.0 V ≤ EV_{DD0} ≤ 5.5 V, 2.7 V ≤ V_b ≤ 4.0 V	24 MHz < f_{MCK}	14/f_{MCK}		—		—		ns
			20 MHz < f_{MCK} ≤ 24 MHz	12/f_{MCK}		—		—		ns
			8 MHz < f_{MCK} ≤ 20 MHz	10/f_{MCK}		—		—		ns
			4 MHz < f_{MCK} ≤ 8 MHz	8/f_{MCK}		16/f_{MCK}		—		ns
			f_{MCK} ≤ 4 MHz	6/f_{MCK}		10/f_{MCK}		10/f_{MCK}		ns
		2.7 V ≤ EV_{DD0} < 4.0 V, 2.3 V ≤ V_b ≤ 2.7 V	24 MHz < f_{MCK}	20/f_{MCK}		—		—		ns
			20 MHz < f_{MCK} ≤ 24 MHz	16/f_{MCK}		—		—		ns
			16 MHz < f_{MCK} ≤ 20 MHz	14/f_{MCK}		—		—		ns
			8 MHz < f_{MCK} ≤ 16 MHz	12/f_{MCK}		—		—		ns
			4 MHz < f_{MCK} ≤ 8 MHz	8/f_{MCK}		16/f_{MCK}		—		ns
			f_{MCK} ≤ 4 MHz	6/f_{MCK}		10/f_{MCK}		10/f_{MCK}		ns
		1.8 V ≤ EV_{DD0} < 3.3 V, 1.6 V ≤ V_b ≤ 2.0 V Note 2	24 MHz < f_{MCK}	48/f_{MCK}		—		—		ns
			20 MHz < f_{MCK} ≤ 24 MHz	36/f_{MCK}		—		—		ns
			16 MHz < f_{MCK} ≤ 20 MHz	32/f_{MCK}		—		—		ns
			8 MHz < f_{MCK} ≤ 16 MHz	26/f_{MCK}		—		—		ns
			4 MHz < f_{MCK} ≤ 8 MHz	16/f_{MCK}		16/f_{MCK}		—		ns
			f_{MCK} ≤ 4 MHz	10/f_{MCK}		10/f_{MCK}		10/f_{MCK}		ns
SCKp high-/ low-level width	t_{KH2}, t_{KL2}	4.0 V ≤ EV_{DD0} ≤ 5.5 V, 2.7 V ≤ V_b ≤ 4.0 V		t_{KCY2}/2 - 12		t_{KCY2}/2 - 50		t_{KCY2}/2 - 50		ns
		2.7 V ≤ EV_{DD0} < 4.0 V, 2.3 V ≤ V_b ≤ 2.7 V		t_{KCY2}/2 - 18		t_{KCY2}/2 - 50		t_{KCY2}/2 - 50		ns
		1.8 V ≤ EV_{DD0} < 3.3 V, 1.6 V ≤ V_b ≤ 2.0 V Note 2		t_{KCY2}/2 - 50		t_{KCY2}/2 - 50		t_{KCY2}/2 - 50		ns
SIp setup time (to SCKp↑) Note 3	t_{SIK2}	4.0 V ≤ EV_{DD0} ≤ 5.5 V, 2.7 V ≤ V_b ≤ 4.0 V		1/f_{MCK} + 20		1/f_{MCK} + 30		1/f_{MCK} + 30		ns
		2.7 V ≤ EV_{DD0} ≤ 4.0 V, 2.3 V ≤ V_b ≤ 2.7 V		1/f_{MCK} + 20		1/f_{MCK} + 30		1/f_{MCK} + 30		ns
		1.8 V ≤ EV_{DD0} ≤ 3.3 V, 1.6 V ≤ V_b ≤ 2.0 V Note 2		1/f_{MCK} + 30		1/f_{MCK} + 30		1/f_{MCK} + 30		ns
SIp hold time (from SCKp↑) Note 4	t_{KSI2}			1/f_{MCK} + 31		1/f_{MCK} + 31		1/f_{MCK} + 31		ns
Delay time from SCKp↓ to SOp output Note 5	t_{KSO2}	4.0 V ≤ EV_{DD0} ≤ 5.5 V, 2.7 V ≤ V_b ≤ 4.0 V, C_b = 30 pF, R_b = 1.4 kΩ			2/f_{MCK} + 120		2/f_{MCK} + 573		2/f_{MCK} + 573	ns
		2.7 V ≤ EV_{DD0} < 4.0 V, 2.3 V ≤ V_b ≤ 2.7 V, C_b = 30 pF, R_b = 2.7 kΩ			2/f_{MCK} + 214		2/f_{MCK} + 573		2/f_{MCK} + 573	ns
		1.8 V ≤ EV_{DD0} < 3.3 V, 1.6 V ≤ V_b ≤ 2.0 V Note 2, C_b = 30 pF, R_v = 5.5 kΩ			2/f_{MCK} + 573		2/f_{MCK} + 573		2/f_{MCK} + 573	ns

(**Notes**, **Cautions**, and **Remarks** are listed on the next page.)

Note 1. Transfer rate in the SNOOZE mode: MAX. 1 Mbps

Note 2. Use it with $EV_{DD0} \geq V_b$.

Note 3. When DAPmn = 0 and CKPmn = 0, or DAPmn = 1 and CKPmn = 1. The SIp setup time becomes "to SCKp↓" when DAPmn = 0 and CKPmn = 1, or DAPmn = 1 and CKPmn = 0.

Note 4. When DAPmn = 0 and CKPmn = 0, or DAPmn = 1 and CKPmn = 1. The SIp hold time becomes "from SCKp↓" when DAPmn = 0 and CKPmn = 1, or DAPmn = 1 and CKPmn = 0.

Note 5. When DAPmn = 0 and CKPmn = 0, or DAPmn = 1 and CKPmn = 1. The delay time to SOp output becomes "from SCKp↑" when DAPmn = 0 and CKPmn = 1, or DAPmn = 1 and CKPmn = 0.

Caution Select the TTL input buffer for the SIp pin and SCKp pin, and the N-ch open drain output (V_{DD} tolerance (for the 48-, 32-, 24-pin products)/EV_{DD} tolerance (for the 64-, 36-pin products)) mode for the SOp pin by using port input mode register g (PIMg) and port output mode register g (POMg). For V_{IH} and V_{IL}, see the DC characteristics with TTL input buffer selected.

Simplified SPI (CSI) mode connection diagram (during communication at different potential)

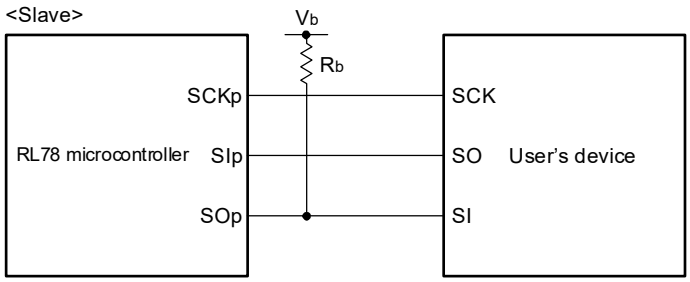

Remark 1. R_b[Ω]: Communication line (SOp) pull-up resistance, C_b[F]: Communication line (SOp) load capacitance, V_b[V]: Communication line voltage

Remark 2. p: CSI number (p = 00, 01, 10, 20), m: Unit number (m = 0, 1), n: Channel number (n = 0 to 3), g: PIM and POM number (g = 0, 1, 3, 5, 7)

Remark 3. f_{MCK}: Serial array unit operation clock frequency
(Operation clock to be set by the CKSmn bit of serial mode register mn (SMRmn).
m: Unit number, n: Channel number (mn = 00, 01, 02, 10))

Remark 4. CSI01 of 48-, 64-pin products, and CSI11 and CSI21 cannot communicate at different potential. Use other CSI for communication at different potential.
Also, communication at different potential cannot be performed during clock synchronous serial communication with the slave select function.

Simplified SPI (CSI) mode serial transfer timing (slave mode) (during communication at different potential)
(When DAPmn = 0 and CKPmn = 0, or DAPmn = 1 and CKPmn = 1.)

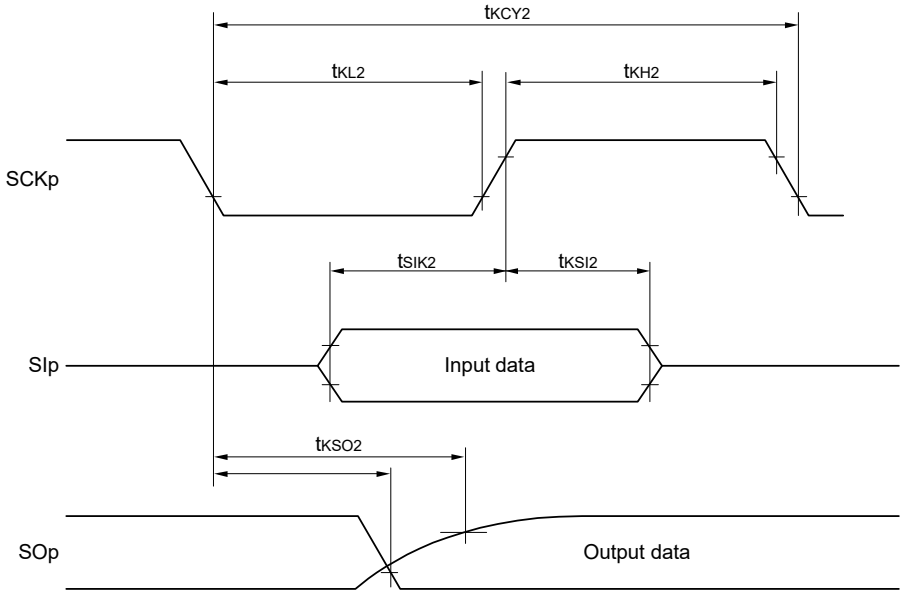

Simplified SPI (CSI) mode serial transfer timing (slave mode) (during communication at different potential)
(When DAPmn = 0 and CKPmn = 1, or DAPmn = 1 and CKPmn = 0.)

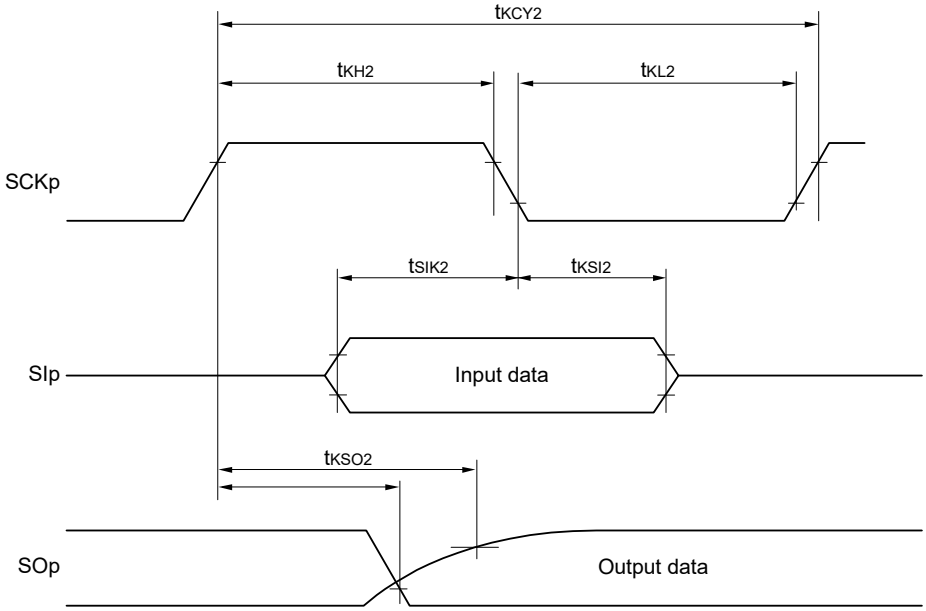

Remark 1. p: CSI number (p = 00, 01, 10, 20), m: Unit number (m = 0, 1), n: Channel number (n = 0 to 3), g: PIM and POM number (g = 0, 1, 3, 5, 7)

Remark 2. CSI01 of 48-, 64-pin products, and CSI11 and CSI21 cannot communicate at different potential. Use other CSI for communication at different potential.
Also, communication at different potential cannot be performed during clock synchronous serial communication with the slave select function.

(10) Communication at different potential (1.8 V, 2.5 V, 3 V) (simplified I²C mode)

(T_A = -40 to +85°C, 1.8 V ≤ EV_{DD0} ≤ V_{DD} ≤ 5.5 V, V_{SS} = EV_{SS0} = 0 V) **(1/2)**

Parameter	Symbol	Conditions	HS (high-speed main) mode		LS (low-speed main) mode		LV (low-voltage main) mode		Unit
			MIN.	MAX.	MIN.	MAX.	MIN.	MAX.	
SCLr clock frequency	f_{SCL}	4.0 V ≤ EV_{DD0} ≤ 5.5 V, 2.7 V ≤ V_b ≤ 4.0 V, C_b = 50 pF, R_b = 2.7 kΩ		1000 Note 1		300 Note 1		300 Note 1	kHz
		2.7 V ≤ EV_{DD0} < 4.0 V, 2.3 V ≤ V_b ≤ 2.7 V, C_b = 50 pF, R_b = 2.7 kΩ		1000 Note 1		300 Note 1		300 Note 1	kHz
		4.0 V ≤ EV_{DD0} ≤ 5.5 V, 2.7 V ≤ V_b ≤ 4.0 V, C_b = 100 pF, R_b = 2.8 kΩ		400 Note 1		300 Note 1		300 Note 1	kHz
		2.7 V ≤ EV_{DD0} < 4.0 V, 2.3 V ≤ V_b ≤ 2.7 V, C_b = 100 pF, R_b = 2.7 kΩ		400 Note 1		300 Note 1		300 Note 1	kHz
		1.8 V ≤ EV_{DD0} < 3.3 V, 1.6 V ≤ V_b ≤ 2.0 V Note 2, C_b = 100 pF, R_b = 5.5 kΩ		300 Note 1		300 Note 1		300 Note 1	kHz
Hold time when SCLr = "L"	t_{LOW}	4.0 V ≤ EV_{DD0} ≤ 5.5 V, 2.7 V ≤ V_b ≤ 4.0 V, C_b = 50 pF, R_b = 2.7 kΩ	475		1550		1550		ns
		2.7 V ≤ EV_{DD0} < 4.0 V, 2.3 V ≤ V_b ≤ 2.7 V, C_b = 50 pF, R_b = 2.7 kΩ	475		1550		1550		ns
		4.0 V ≤ EV_{DD0} ≤ 5.5 V, 2.7 V ≤ V_b ≤ 4.0 V, C_b = 100 pF, R_b = 2.8 kΩ	1150		1550		1550		ns
		2.7 V ≤ EV_{DD0} < 4.0 V, 2.3 V ≤ V_b ≤ 2.7 V, C_b = 100 pF, R_b = 2.7 kΩ	1150		1550		1550		ns
		1.8 V ≤ EV_{DD0} < 3.3 V, 1.6 V ≤ V_b ≤ 2.0 V Note 2, C_b = 100 pF, R_b = 5.5 kΩ	1550		1550		1550		ns
Hold time when SCLr = "H"	t_{HIGH}	4.0 V ≤ EV_{DD0} ≤ 5.5 V, 2.7 V ≤ V_b ≤ 4.0 V, C_b = 50 pF, R_b = 2.7 kΩ	245		610		610		ns
		2.7 V ≤ EV_{DD0} < 4.0 V, 2.3 V ≤ V_b ≤ 2.7 V, C_b = 50 pF, R_b = 2.7 kΩ	200		610		610		ns
		4.0 V ≤ EV_{DD0} ≤ 5.5 V, 2.7 V ≤ V_b ≤ 4.0 V, C_b = 100 pF, R_b = 2.8 kΩ	675		610		610		ns
		2.7 V ≤ EV_{DD0} < 4.0 V, 2.3 V ≤ V_b ≤ 2.7 V, C_b = 100 pF, R_b = 2.7 kΩ	600		610		610		ns
		1.8 V ≤ EV_{DD0} < 3.3 V, 1.6 V ≤ V_b ≤ 2.0 V Note 2, C_b = 100 pF, R_b = 5.5 kΩ	610		610		610		ns

(10) Communication at different potential (1.8 V, 2.5 V, 3 V) (simplified I²C mode)

(T_A = -40 to +85°C, 1.8 V ≤ EV_{DD0} ≤ V_{DD} ≤ 5.5 V, V_{SS} = EV_{SS0} = 0 V) **(2/2)**

Parameter	Symbol	Conditions	HS (high-speed main) mode		LS (low-speed main) mode		LV (low-voltage main) mode		Unit
			MIN.	MAX.	MIN.	MAX.	MIN.	MAX.	
Data setup time (reception)	$t_{SU:DAT}$	4.0 V ≤ EV_{DD0} ≤ 5.5 V, 2.7 V ≤ V_b ≤ 4.0 V, C_b = 50 pF, R_b = 2.7 kΩ	$1/f_{MCK}$ + 135 Note 3		$1/f_{MCK}$ + 190 Note 3		$1/f_{MCK}$ + 190 Note 3		ns
		2.7 V ≤ EV_{DD0} < 4.0 V, 2.3 V ≤ V_b ≤ 2.7 V, C_b = 50 pF, R_b = 2.7 kΩ	$1/f_{MCK}$ + 135 Note 3		$1/f_{MCK}$ + 190 Note 3		$1/f_{MCK}$ + 190 Note 3		ns
		4.0 V ≤ EV_{DD0} ≤ 5.5 V, 2.7 V ≤ V_b ≤ 4.0 V, C_b = 100 pF, R_b = 2.8 kΩ	$1/f_{MCK}$ + 190 Note 3		$1/f_{MCK}$ + 190 Note 3		$1/f_{MCK}$ + 190 Note 3		ns
		2.7 V ≤ EV_{DD0} < 4.0 V, 2.3 V ≤ V_b ≤ 2.7 V, C_b = 100 pF, R_b = 2.7 kΩ	$1/f_{MCK}$ + 190 Note 3		$1/f_{MCK}$ + 190 Note 3		$1/f_{MCK}$ + 190 Note 3		ns
		1.8 V ≤ EV_{DD0} < 3.3 V, 1.6 V ≤ V_b ≤ 2.0 V Note 2, C_b = 100 pF, R_b = 5.5 kΩ	$1/f_{MCK}$ + 190 Note 3		$1/f_{MCK}$ + 190 Note 3		$1/f_{MCK}$ + 190 Note 3		ns
Data hold time (transmission)	$t_{HD:DAT}$	4.0 V ≤ EV_{DD0} ≤ 5.5 V, 2.7 V ≤ V_b ≤ 4.0 V, C_b = 50 pF, R_b = 2.7 kΩ	0	305	0	305	0	305	ns
		2.7 V ≤ EV_{DD0} < 4.0 V, 2.3 V ≤ V_b ≤ 2.7 V, C_b = 50 pF, R_b = 2.7 kΩ	0	305	0	305	0	305	ns
		4.0 V ≤ EV_{DD0} ≤ 5.5 V, 2.7 V ≤ V_b ≤ 4.0 V, C_b = 100 pF, R_b = 2.8 kΩ	0	355	0	355	0	355	ns
		2.7 V ≤ EV_{DD0} < 4.0 V, 2.3 V ≤ V_b ≤ 2.7 V, C_b = 100 pF, R_b = 2.7 kΩ	0	355	0	355	0	355	ns
		1.8 V ≤ EV_{DD0} < 3.3 V, 1.6 V ≤ V_b ≤ 2.0 V Note 2, C_b = 100 pF, R_b = 5.5 kΩ	0	405	0	405	0	405	ns

Note 1. The value must also be equal to or less than f_{MCK}/4.

Note 2. Use it with EV_{DD0} ≥ V_b.

Note 3. Set the f_{MCK} value to keep the hold time of SCLr = "L" and SCLr = "H".

Caution **Select the TTL input buffer and the N-ch open drain output (V_{DD} tolerance (for the 48-, 32-, 24-pin products)/EV_{DD} tolerance (for the 64-, 36-pin products)) mode for the SDAr pin and the N-ch open drain output (V_{DD} tolerance (for the 48-, 32-, 24-pin products)/EV_{DD} tolerance (for the 64-, 36-pin products)) mode for the SCLr pin by using port input mode register g (PIMg) and port output mode register g (POMg). For V_{IH} and V_{IL}, see the DC characteristics with TTL input buffer selected.**

(**Remarks** are listed on the next page.)

Simplified I²C mode connection diagram (during communication at different potential)

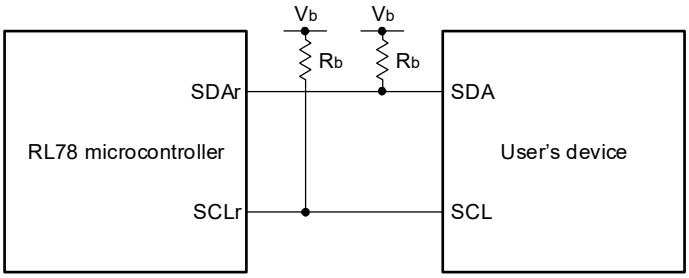

Simplified I²C mode serial transfer timing (during communication at different potential)

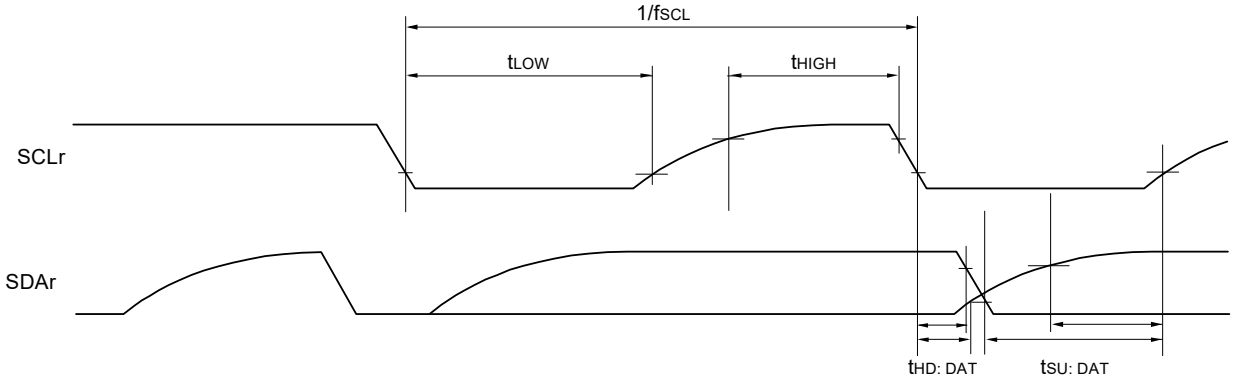

Remark 1. R_b[Ω]: Communication line (SDAr, SCLr) pull-up resistance, C_b[F]: Communication line (SDAr, SCLr) load capacitance, V_b[V]: Communication line voltage

Remark 2. r: IIC number (r = 00, 01, 10, 11, 20), g: PIM, POM number (g = 0, 1, 3, 5, 7)

Remark 3. f_{MCK}: Serial array unit operation clock frequency
(Operation clock to be set by the CKSmn bit of serial mode register mn (SMRmn). m: Unit number (m = 0, 1), n: Channel number (n = 0, 2), mn = 00, 01, 02, 10)

37.5.2 Serial interface IICA

(1) I²C standard mode

(T_A = -40 to +85°C, 1.6 V ≤ EV_{DD0} ≤ V_{DD} ≤ 5.5 V, V_{SS} = EV_{SS0} = 0 V) **(1/2)**

Parameter	Symbol	Conditions		HS (high-speed main) mode		LS (low-speed main) mode		LV (low-voltage main) mode		Unit
				MIN.	MAX.	MIN.	MAX.	MIN.	MAX.	
SCLA0 clock frequency	f_{SCL}	Standard mode: f_{CLK} ≥ 1 MHz	2.7 V ≤ EV_{DD0} ≤ 5.5 V	0	100	0	100	0	100	kHz
			1.8 V ≤ EV_{DD0} ≤ 5.5 V	0	100	0	100	0	100	kHz
			1.7 V ≤ EV_{DD0} ≤ 5.5 V	0	100	0	100	0	100	kHz
			1.6 V ≤ EV_{DD0} ≤ 5.5 V	—		0	100	0	100	kHz
Setup time of restart condition	$t_{SU: STA}$	2.7 V ≤ EV_{DD0} ≤ 5.5 V		4.7		4.7		4.7		μs
		1.8 V ≤ EV_{DD0} ≤ 5.5 V		4.7		4.7		4.7		μs
		1.7 V ≤ EV_{DD0} ≤ 5.5 V		4.7		4.7		4.7		μs
		1.6 V ≤ EV_{DD0} ≤ 5.5 V		—		4.7		4.7		μs
Hold time Note 1	$t_{HD: STA}$	2.7 V ≤ EV_{DD0} ≤ 5.5 V		4.0		4.0		4.0		μs
		1.8 V ≤ EV_{DD0} ≤ 5.5 V		4.0		4.0		4.0		μs
		1.7 V ≤ EV_{DD0} ≤ 5.5 V		4.0		4.0		4.0		μs
		1.6 V ≤ EV_{DD0} ≤ 5.5 V		—		4.0		4.0		μs
Hold time when SCLA0 = "L"	t_{LOW}	2.7 V ≤ EV_{DD0} ≤ 5.5 V		4.7		4.7		4.7		μs
		1.8 V ≤ EV_{DD0} ≤ 5.5 V		4.7		4.7		4.7		μs
		1.7 V ≤ EV_{DD0} ≤ 5.5 V		4.7		4.7		4.7		μs
		1.6 V ≤ EV_{DD0} ≤ 5.5 V		—		4.7		4.7		μs
Hold time when SCLA0 = "H"	t_{HIGH}	2.7 V ≤ EV_{DD0} ≤ 5.5 V		4.0		4.0		4.0		μs
		1.8 V ≤ EV_{DD0} ≤ 5.5 V		4.0		4.0		4.0		μs
		1.7 V ≤ EV_{DD0} ≤ 5.5 V		4.0		4.0		4.0		μs
		1.6 V ≤ EV_{DD0} ≤ 5.5 V		—		4.0		4.0		μs

(**Notes**, **Caution**, and **Remark** are listed on the next page.)

(1) I²C standard mode

(T_A = -40 to +85°C, 1.6 V ≤ EV_{DD0} ≤ V_{DD} ≤ 5.5 V, V_{SS} = EV_{SS0} = 0 V) **(2/2)**

Parameter	Symbol	Conditions	HS (high-speed main) mode		LS (low-speed main) mode		LV (low-voltage main) mode		Unit
			MIN.	MAX.	MIN.	MAX.	MIN.	MAX.	
Data setup time (reception)	$t_{SU: DAT}$	2.7 V ≤ EV_{DD0} ≤ 5.5 V	250		250		250		ns
		1.8 V ≤ EV_{DD0} ≤ 5.5 V	250		250		250		ns
		1.7 V ≤ EV_{DD0} ≤ 5.5 V	250		250		250		ns
		1.6 V ≤ EV_{DD0} ≤ 5.5 V	—		250		250		ns
Data hold time (transmission) Note 2	$t_{HD: DAT}$	2.7 V ≤ EV_{DD0} ≤ 5.5 V	0	3.45	0	3.45	0	3.45	μs
		1.8 V ≤ EV_{DD0} ≤ 5.5 V	0	3.45	0	3.45	0	3.45	μs
		1.7 V ≤ EV_{DD0} ≤ 5.5 V	0	3.45	0	3.45	0	3.45	μs
		1.6 V ≤ EV_{DD0} ≤ 5.5 V	—		0	3.45	0	3.45	μs
Setup time of stop condition	$t_{SU: STO}$	2.7 V ≤ EV_{DD0} ≤ 5.5 V	4.0		4.0		4.0		μs
		1.8 V ≤ EV_{DD0} ≤ 5.5 V	4.0		4.0		4.0		μs
		1.7 V ≤ EV_{DD0} ≤ 5.5 V	4.0		4.0		4.0		μs
		1.6 V ≤ EV_{DD0} ≤ 5.5 V	—		4.0		4.0		μs
Bus-free time	t_{BUF}	2.7 V ≤ EV_{DD0} ≤ 5.5 V	4.7		4.7		4.7		μs
		1.8 V ≤ EV_{DD0} ≤ 5.5 V	4.7		4.7		4.7		μs
		1.7 V ≤ EV_{DD0} ≤ 5.5 V	4.7		4.7		4.7		μs
		1.6 V ≤ EV_{DD0} ≤ 5.5 V	—		4.7		4.7		μs

Note 1. The first clock pulse is generated after this period when the start/restart condition is detected.

Note 2. The maximum value (MAX.) of $t_{HD: DAT}$ is during normal transfer and a clock stretch state is inserted in the ACK (acknowledge) timing.

Caution **The values in the above table are applied even when bit 2 (PIOR02) in the peripheral I/O redirection register 0 (PIOR0) is 1. At this time, the pin characteristics (I_{OH1}, I_{OL1}, V_{OH1}, V_{OL1}) must satisfy the values in the redirect destination.**

Remark The maximum value of C_b (communication line capacitance) and the value of R_b (communication line pull-up resistor) at that time in each mode are as follows.

Standard mode: C_b = 400 pF, R_b = 2.7 kΩ

(2) I²C fast mode

(T_A = -40 to +85°C, 1.6 V ≤ EV_{DD0} ≤ V_{DD} ≤ 5.5 V, V_{SS} = EV_{SS0} = 0 V)

Parameter	Symbol	Conditions		HS (high-speed main) mode		LS (low-speed main) mode		LV (low-voltage main) mode		Unit
				MIN.	MAX.	MIN.	MAX.	MIN.	MAX.	
SCLA0 clock frequency	f_{SCL}	Fast mode: f_{CLK} ≥ 3.5 MHz	2.7 V ≤ EV_{DD0} ≤ 5.5 V	0	400	0	400	0	400	kHz
			1.8 V ≤ EV_{DD0} ≤ 5.5 V	0	400	0	400	0	400	kHz
Setup time of restart condition	$t_{SU: STA}$	2.7 V ≤ EV_{DD0} ≤ 5.5 V		0.6		0.6		0.6		μs
		1.8 V ≤ EV_{DD0} ≤ 5.5 V		0.6		0.6		0.6		μs
Hold time Note 1	$t_{HD: STA}$	2.7 V ≤ EV_{DD0} ≤ 5.5 V		0.6		0.6		0.6		μs
		1.8 V ≤ EV_{DD0} ≤ 5.5 V		0.6		0.6		0.6		μs
Hold time when SCLA0 = "L"	t_{LOW}	2.7 V ≤ EV_{DD0} ≤ 5.5 V		1.3		1.3		1.3		μs
		1.8 V ≤ EV_{DD0} ≤ 5.5 V		1.3		1.3		1.3		μs
Hold time when SCLA0 = "H"	t_{HIGH}	2.7 V ≤ EV_{DD0} ≤ 5.5 V		0.6		0.6		0.6		μs
		1.8 V ≤ EV_{DD0} ≤ 5.5 V		0.6		0.6		0.6		μs
Data setup time (reception)	$t_{SU: DAT}$	2.7 V ≤ EV_{DD0} ≤ 5.5 V		100		100		100		ns
		1.8 V ≤ EV_{DD0} ≤ 5.5 V		100		100		100		ns
Data hold time (transmission) Note 2	$t_{HD: DAT}$	2.7 V ≤ EV_{DD0} ≤ 5.5 V		0	0.9	0	0.9	0	0.9	μs
		1.8 V ≤ EV_{DD0} ≤ 5.5 V		0	0.9	0	0.9	0	0.9	μs
Setup time of stop condition	$t_{SU: STO}$	2.7 V ≤ EV_{DD0} ≤ 5.5 V		0.6		0.6		0.6		μs
		1.8 V ≤ EV_{DD0} ≤ 5.5 V		0.6		0.6		0.6		μs
Bus-free time	t_{BUF}	2.7 V ≤ EV_{DD0} ≤ 5.5 V		1.3		1.3		1.3		μs
		1.8 V ≤ EV_{DD0} ≤ 5.5 V		1.3		1.3		1.3		μs

Note 1. The first clock pulse is generated after this period when the start/restart condition is detected.

Note 2. The maximum value (MAX.) of $t_{HD: DAT}$ is during normal transfer and a clock stretch state is inserted in the ACK (acknowledge) timing.

Caution **The values in the above table are applied even when bit 2 (PIOR02) in the peripheral I/O redirection register 0 (PIOR0) is 1. At this time, the pin characteristics (I_{OH1}, I_{OL1}, V_{OH1}, V_{OL1}) must satisfy the values in the redirect destination.**

Remark The maximum value of C_b (communication line capacitance) and the value of R_b (communication line pull-up resistor) at that time in each mode are as follows.

Fast mode: C_b = 320 pF, R_b = 1.1 kΩ

(3) I²C fast mode plus

(T_A = -40 to +85°C, 1.6 V ≤ EV_{DD0} ≤ V_{DD} ≤ 5.5 V, V_{SS} = EV_{SS0} = 0 V)

Parameter	Symbol	Conditions		HS (high-speed main) mode		LS (low-speed main) mode		LV (low-voltage main) mode		Unit
				MIN.	MAX.	MIN.	MAX.	MIN.	MAX.	
SCLA0 clock frequency	f_{SCL}	Fast mode plus: f_{CLK} ≥ 10 MHz	2.7 V ≤ EV_{DD0} ≤ 5.5 V	0	1000	—		—		kHz
Setup time of restart condition	$t_{SU: STA}$	2.7 V ≤ EV_{DD0} ≤ 5.5 V		0.26		—		—		μs
Hold time Note 1	$t_{HD: STA}$	2.7 V ≤ EV_{DD0} ≤ 5.5 V		0.26		—		—		μs
Hold time when SCLA0 = "L"	t_{LOW}	2.7 V ≤ EV_{DD0} ≤ 5.5 V		0.5		—		—		μs
Hold time when SCLA0 = "H"	t_{HIGH}	2.7 V ≤ EV_{DD0} ≤ 5.5 V		0.26		—		—		μs
Data setup time (reception)	$t_{SU: DAT}$	2.7 V ≤ EV_{DD0} ≤ 5.5 V		50		—		—		ns
Data hold time (transmission) Note 2	$t_{HD: DAT}$	2.7 V ≤ EV_{DD0} ≤ 5.5 V		0	0.45	—		—		μs
Setup time of stop condition	$t_{SU: STO}$	2.7 V ≤ EV_{DD0} ≤ 5.5 V		0.26		—		—		μs
Bus-free time	t_{BUF}	2.7 V ≤ EV_{DD0} ≤ 5.5 V		0.5		—		—		μs

Note 1. The first clock pulse is generated after this period when the start/restart condition is detected.

Note 2. The maximum value (MAX.) of $t_{HD: DAT}$ is during normal transfer and a clock stretch state is inserted in the ACK (acknowledge) timing.

Caution **The values in the above table are applied even when bit 2 (PIOR02) in the peripheral I/O redirection register 0 (PIOR0) is 1. At this time, the pin characteristics (I_{OH1}, I_{OL1}, V_{OH1}, V_{OL1}) must satisfy the values in the redirect destination.**

Remark The maximum value of C_b (communication line capacitance) and the value of R_b (communication line pull-up resistor) at that time in each mode are as follows.
Fast mode plus: C_b = 120 pF, R_b = 1.1 kΩ

IICA serial transfer timing

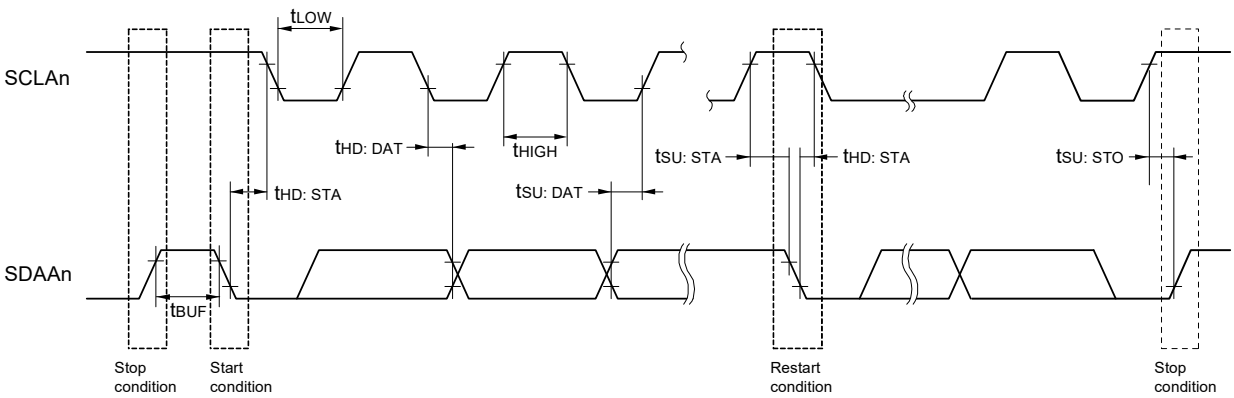

Remark n = 0, 1

37.6 Analog Characteristics

37.6.1 A/D converter characteristics

Classification of A/D converter characteristics

Reference Voltage / Input channel	Reference voltage (+) = AV_{REFP} Reference voltage (-) = AV_{REFM}	Reference voltage (+) = V_{DD} Reference voltage (-) = V_{SS}	Reference voltage (+) = V_{BGR} Reference voltage (-)= AV_{REFM}
ANI0 to ANI7	Refer to **37.6.1 (1)**.	Refer to **37.6.1 (3)**.	Refer to **37.6.1 (4)**.
ANI16 to ANI24	Refer to **37.6.1 (2)**.		
Internal reference voltage Temperature sensor output voltage	Refer to **37.6.1 (1)**.		—

(1) When reference voltage (+) = AV_{REFP}/ANI0 (ADREFP1 = 0, ADREFP0 = 1), reference voltage (-) = AV_{REFM}/ANI1 (ADREFM = 1), target pin: ANI2 to ANI7, internal reference voltage, and temperature sensor output voltage

(T_A = -40 to +85°C, 1.6 V ≤ AV_{REFP} ≤ V_{DD} ≤ 5.5 V, V_{SS} = 0 V, Reference voltage (+) = AV_{REFP}, Reference voltage (-) = AV_{REFM} = 0 V)

Parameter	Symbol	Conditions		MIN.	TYP.	MAX.	Unit
Resolution	RES			8		10	bit
Overall error Note 1	AINL	10-bit resolution AV_{REFP} = V_{DD} Note 3	1.8 V ≤ AV_{REFP} ≤ 5.5 V		1.2	±3.5	LSB
			1.6 V ≤ AV_{REFP} ≤ 5.5 V Note 4		1.2	±7.0	LSB
Conversion time	t_{CONV}	10-bit resolution Target pin: ANI2 to ANI14	3.6 V ≤ V_{DD} ≤ 5.5 V	2.125		39	μs
			2.7 V ≤ V_{DD} ≤ 5.5 V	3.1875		39	μs
			1.8 V ≤ V_{DD} ≤ 5.5 V	17		39	μs
			1.6 V ≤ V_{DD} ≤ 5.5 V	57		95	μs
		10-bit resolution Target pin: Internal reference voltage, and temperature sensor output voltage (HS (high-speed main) mode)	3.6 V ≤ V_{DD} ≤ 5.5 V	2.375		39	μs
			2.7 V ≤ V_{DD} ≤ 5.5 V	3.5625		39	μs
			2.4 V ≤ V_{DD} ≤ 5.5 V	17		39	μs
Zero-scale error Notes 1, 2	E_{ZS}	10-bit resolution AV_{REFP} = V_{DD} Note 3	1.8 V ≤ AV_{REFP} ≤ 5.5 V			±0.25	%FSR
			1.6 V ≤ AV_{REFP} ≤ 5.5 V Note 4			±0.50	%FSR
Full-scale error Notes 1, 2	E_{FS}	10-bit resolution AV_{REFP} = V_{DD} Note 3	1.8 V ≤ AV_{REFP} ≤ 5.5 V			±0.25	%FSR
			1.6 V ≤ AV_{REFP} ≤ 5.5 V Note 4			±0.50	%FSR
Integral linearity error Note 1	ILE	10-bit resolution AV_{REFP} = V_{DD} Note 3	1.8 V ≤ AV_{REFP} ≤ 5.5 V			±2.5	LSB
			1.6 V ≤ AV_{REFP} ≤ 5.5 V Note 4			±5.0	LSB
Differential linearity error Note 1	DLE	10-bit resolution AV_{REFP} = V_{DD} Note 3	1.8 V ≤ AV_{REFP} ≤ 5.5 V			±1.5	LSB
			1.6 V ≤ AV_{REFP} ≤ 5.5 V Note 4			±2.0	LSB
Analog input voltage	V_{AIN}	ANI2 to ANI7		0		AV_{REFP}	V
		Internal reference voltage (2.4 V ≤ V_{DD} ≤ 5.5 V, HS (high-speed main) mode)		V_{BGR} Note 5			V
		Temperature sensor output voltage (2.4 V ≤ V_{DD} ≤ 5.5 V, HS (high-speed main) mode)		V_{TMPS25} Note 5			V

Note 1. Excludes quantization error (±1/2 LSB).

Note 2. This value is indicated as a ratio (%FSR) to the full-scale value.

Note 3. When AV_{REFP} < V_{DD}, the MAX. values are as follows.

Overall error: Add ±1.0 LSB to the MAX. value when AV_{REFP} = V_{DD}.

Zero-scale error/Full-scale error: Add ±0.05%FSR to the MAX. value when AV_{REFP} = V_{DD}.

Integral linearity error/ Differential linearity error: Add ±0.5 LSB to the MAX. value when AV_{REFP} = V_{DD}.

Note 4. Values when the conversion time is set to 57 μs (min.) and 95 μs (max.).

Note 5. Refer to **37.6.2 Temperature sensor characteristics/internal reference voltage characteristic**.

(2) When reference voltage (+) = AV_{REFP}/ANI0 (ADREFP1 = 0, ADREFP0 = 1), reference voltage (-) = AV_{REFM}/ANI1 (ADREFM = 1), target pin: ANI16 to ANI24

(T_A = -40 to +85°C, 1.6 V ≤ EV_{DD0} ≤ V_{DD} ≤ 5.5 V, 1.6 V ≤ AV_{REFP} ≤ V_{DD} ≤ 5.5 V, V_{SS} = EV_{SS0} = 0 V, Reference voltage (+) = AV_{REFP}, Reference voltage (-) = AV_{REFM} = 0 V)

Parameter	Symbol	Conditions		MIN.	TYP.	MAX.	Unit
Resolution	RES			8		10	bit
Overall error Note 1	AINL	10-bit resolution EV_{DD0} ≤ AV_{REFP} = V_{DD} Notes 3, 4	1.8 V ≤ AV_{REFP} ≤ 5.5 V		1.2	±5.0	LSB
			1.6 V ≤ AV_{REFP} ≤ 5.5 V Note 5		1.2	±8.5	LSB
Conversion time	t_{CONV}	10-bit resolution Target ANI pin: ANI16 to ANI24	3.6 V ≤ V_{DD} ≤ 5.5 V	2.125		39	μs
			2.7 V ≤ V_{DD} ≤ 5.5 V	3.1875		39	μs
			1.8 V ≤ V_{DD} ≤ 5.5 V	17		39	μs
			1.6 V ≤ V_{DD} ≤ 5.5 V	57		95	μs
Zero-scale error Notes 1, 2	E_{ZS}	10-bit resolution EV_{DD0} ≤ AV_{REFP} = V_{DD} Notes 3, 4	1.8 V ≤ AV_{REFP} ≤ 5.5 V			±0.35	%FSR
			1.6 V ≤ AV_{REFP} ≤ 5.5 V Note 5			±0.60	%FSR
Full-scale error Notes 1, 2	E_{FS}	10-bit resolution EV_{DD0} ≤ AV_{REFP} = V_{DD} Notes 3, 4	1.8 V ≤ AV_{REFP} ≤ 5.5 V			±0.35	%FSR
			1.6 V ≤ AV_{REFP} ≤ 5.5 V Note 5			±0.60	%FSR
Integral linearity error Note 1	ILE	10-bit resolution EV_{DD0} ≤ AV_{REFP} = V_{DD} Notes 3, 4	1.8 V ≤ AV_{REFP} ≤ 5.5 V			±3.5	LSB
			1.6 V ≤ AV_{REFP} ≤ 5.5 V Note 5			±6.0	LSB
Differential linearity error Note 1	DLE	10-bit resolution EV_{DD0} ≤ AV_{REFP} = V_{DD} Notes 3, 4	1.8 V ≤ AV_{REFP} ≤ 5.5 V			±2.0	LSB
			1.6 V ≤ AV_{REFP} ≤ 5.5 V Note 5			±2.5	LSB
Analog input voltage	V_{AIN}	ANI16 to ANI24		0		AV_{REFP} and EV_{DD0}	V

Note 1. Excludes quantization error (±1/2 LSB).

Note 2. This value is indicated as a ratio (%FSR) to the full-scale value.

Note 3. When EV_{DD0} ≤ AV_{REFP} ≤ V_{DD}, the MAX. values are as follows.

Overall error: Add ±1.0 LSB to the MAX. value when AV_{REFP} = V_{DD}.

Zero-scale error/Full-scale error: Add ±0.05%FSR to the MAX. value when AV_{REFP} = V_{DD}.

Integral linearity error/ Differential linearity error: Add ±0.5 LSB to the MAX. value when AV_{REFP} = V_{DD}.

Note 4. When AV_{REFP} < EV_{DD0} ≤ V_{DD}, the MAX. values are as follows.

Overall error: Add ±4.0 LSB to the MAX. value when AV_{REFP} = V_{DD}.

Zero-scale error/Full-scale error: Add ±0.20%FSR to the MAX. value when AV_{REFP} = V_{DD}.

Integral linearity error/ Differential linearity error: Add ±2.0 LSB to the MAX. value when AV_{REFP} = V_{DD}.

Note 5. When the conversion time is set to 57 μs (min.) and 95 μs (max.).

(3) When reference voltage (+) = V_{DD} (ADREFP1 = 0, ADREFP0 = 0), reference voltage (-) = V_{SS} (ADREFM = 0), target pin: ANI0 to ANI17, ANI16 to ANI24, internal reference voltage, and temperature sensor output voltage

(T_A = -40 to +85°C, 1.6 V ≤ EV_{DD0} ≤ V_{DD} ≤ 5.5 V, V_{SS} = EV_{SS0} = 0 V, Reference voltage (+) = V_{DD}, Reference voltage (-) = V_{SS})

Parameter	Symbol	Conditions		MIN.	TYP.	MAX.	Unit
Resolution	RES			8		10	bit
Overall error Note 1	AINL	10-bit resolution	1.8 V ≤ V_{DD} ≤ 5.5 V		1.2	±7.0	LSB
			1.6 V ≤ V_{DD} ≤ 5.5 V Note 3		1.2	±10.5	LSB
Conversion time	t_{CONV}	10-bit resolution Target pin: ANI0 to ANI7, ANI16 to ANI24	3.6 V ≤ V_{DD} ≤ 5.5 V	2.125		39	μs
			2.7 V ≤ V_{DD} ≤ 5.5 V	3.1875		39	μs
			1.8 V ≤ V_{DD} ≤ 5.5 V	17		39	μs
			1.6 V ≤ V_{DD} ≤ 5.5 V	57		95	μs
		10-bit resolution Target pin: internal reference voltage, and temperature sensor output voltage (HS (high-speed main) mode)	3.6 V ≤ V_{DD} ≤ 5.5 V	2.375		39	μs
			2.7 V ≤ V_{DD} ≤ 5.5 V	3.5625		39	μs
			2.4 V ≤ V_{DD} ≤ 5.5 V	17		39	μs
Zero-scale error Notes 1, 2	E_{ZS}	10-bit resolution	1.8 V ≤ V_{DD} ≤ 5.5 V			±0.60	%FSR
			1.6 V ≤ V_{DD} ≤ 5.5 V Note 3			±0.85	%FSR
Full-scale error Notes 1, 2	E_{FS}	10-bit resolution	1.8 V ≤ V_{DD} ≤ 5.5 V			±0.60	%FSR
			1.6 V ≤ V_{DD} ≤ 5.5 V Note 3			±0.85	%FSR
Integral linearity error Note 1	ILE	10-bit resolution	1.8 V ≤ V_{DD} ≤ 5.5 V			±4.0	LSB
			1.6 V ≤ V_{DD} ≤ 5.5 V Note 3			±6.5	LSB
Differential linearity error Note 1	DLE	10-bit resolution	1.8 V ≤ V_{DD} ≤ 5.5 V			±2.0	LSB
			1.6 V ≤ V_{DD} ≤ 5.5 V Note 3			±2.5	LSB
Analog input voltage	V_{AIN}	ANI0 to ANI7		0		V_{DD}	V
		ANI16 to ANI24		0		EV_{DD0}	V
		Internal reference voltage (2.4 V ≤ V_{DD} ≤ 5.5 V, HS (high-speed main) mode)		V_{BGR} Note 4			V
		Temperature sensor output voltage (2.4 V ≤ V_{DD} ≤ 5.5 V, HS (high-speed main) mode)		V_{TMPS25} Note 4			V

Note 1. Excludes quantization error (±1/2 LSB).

Note 2. This value is indicated as a ratio (% FSR) to the full-scale value.

Note 3. When the conversion time is set to 57 μs (min.) and 95 μs (max.).

Note 4. Refer to **37.6.2 Temperature sensor characteristics/internal reference voltage characteristic**.

(4) When reference voltage (+) = Internal reference voltage (ADREFP1 = 1, ADREFP0 = 0), reference voltage (-) = AV_{REFM}/ANI1 (ADREFM = 1), target pin: ANI0, ANI2 to ANI7, ANI16 to ANI24

(T_A = -40 to +85°C, 2.4 V ≤ V_{DD} ≤ 5.5 V, 1.6 V ≤ EV_{DD0} ≤ V_{DD}, V_{SS} = EV_{SS0} = 0 V, Reference voltage (+) = V_{BGR} Note 3, Reference voltage (-) = AV_{REFM} = 0 V Note 4, HS (high-speed main) mode)

Parameter	Symbol	Conditions		MIN.	TYP.	MAX.	Unit
Resolution	RES				8		bit
Conversion time	t_{CONV}	8-bit resolution	2.4 V ≤ V_{DD} ≤ 5.5 V	17		39	μs
Zero-scale error Notes 1, 2	E_{ZS}	8-bit resolution	2.4 V ≤ V_{DD} ≤ 5.5 V			±0.60	% FSR
Integral linearity error Note 1	ILE	8-bit resolution	2.4 V ≤ V_{DD} ≤ 5.5 V			±2.0	LSB
Differential linearity error Note 1	DLE	8-bit resolution	2.4 V ≤ V_{DD} ≤ 5.5 V			±1.0	LSB
Analog input voltage	V_{AIN}			0		V_{BGR} Note 3	V

Note 1. Excludes quantization error (±1/2 LSB).

Note 2. This value is indicated as a ratio (% FSR) to the full-scale value.

Note 3. Refer to **37.6.2 Temperature sensor characteristics/internal reference voltage characteristic**.

Note 4. When reference voltage (-) = V_{SS}, the MAX. values are as follows.

Zero-scale error: Add ±0.35%FSR to the MAX. value when reference voltage (-) = AV_{REFM}.

Integral linearity error: Add ±0.5 LSB to the MAX. value when reference voltage (-) = AV_{REFM}.

Differential linearity error: Add ±0.2 LSB to the MAX. value when reference voltage (-) = AV_{REFM}.

37.6.2 Temperature sensor characteristics/internal reference voltage characteristic

(T_A = -40 to +85°C, 2.4 V ≤ V_{DD} ≤ 5.5 V, V_{SS} = EV_{SS0} = 0 V, HS (high-speed main) mode)

Parameter	Symbol	Conditions	MIN.	TYP.	MAX.	Unit
Temperature sensor output voltage	V_{TMPS25}	Setting ADS register = 80H, T_A = +25°C		1.05		V
Internal reference voltage	V_{BGR}	Setting ADS register = 81H	1.38	1.45	1.5	V
Temperature coefficient	F_{VTMPS}	Temperature sensor that depends on the temperature		-3.6		mV/°C
Operation stabilization wait time	t_{AMP}		5			μs

37.6.3 D/A converter characteristics

(T_A = -40 to +85°C, 1.6 V ≤ EV_{SS0} ≤ V_{DD} ≤ 5.5 V, V_{SS} = EV_{SS0} = 0 V)

Parameter	Symbol	Conditions		MIN.	TYP.	MAX.	Unit
Resolution	RES					8	bit
Overall error	AINL	Rload = 4 MΩ	1.8 V ≤ V_{DD} ≤ 5.5 V			±2.5	LSB
		Rload = 8 MΩ	1.8 V ≤ V_{DD} ≤ 5.5 V			±2.5	LSB
Settling time	t_{SET}	Cload = 20 pF	2.7 V ≤ V_{DD} ≤ 5.5 V			3	μs
			1.6 V ≤ V_{DD} < 2.7 V			6	μs

37.6.4 Comparator

(T_A = -40 to +85°C, 2.7 V ≤ V_{DD} ≤ 5.5 V, V_{SS} = 0 V)

Parameter	Symbol	Conditions		MIN.	TYP.	MAX.	Unit
Input offset voltage	V_{IOCMP}				±5	±40	mV
Input voltage range	V_{ICMP}			0		V_{DD}	V
Internal reference voltage deviation	ΔV_{IREF}	CmRVM register value : 7FH to 80H (m = 0, 1)				±2	LSB
		Other than above				±1	LSB
Response Time	t_{CR}, t_{CF}	Input amplitude±100mV			70	150	ns
Operation stabilization time[Note 1]	t_{CMP}	CMPn = 0→1	V_{DD} = 3.3 to 5.5 V			1	μs
			V_{DD} = 2.7 to 3.3 V			3	μs
Reference voltage stabilization wait time	t_{VR}	CVRE : 0→1[Note 2]				20	μs
Operation current	I_{CMPDD}	Separately, it is defined as the operation current of peripheral functions.					

Note 1. Time taken until the comparator satisfies the DC/AC characteristics after the comparator operation enable signal is switched (CMPnEN = 0 → 1).

Note 2. Enable comparator output (CnOE bit = 1; n = 0 to 1) after enabling operation of the internal reference voltage generator (by setting the CVREm bit to 1; m = 0 to 1) and waiting for the operation stabilization time to elapse.

37.6.5 PGA

(T_A = -40 to +85°C, 2.7 V ≤ V_{DD} ≤ 5.5 V, V_{SS} = 0 V)

Parameter	Symbol	Conditions		MIN.	TYP.	MAX.	Unit
Input offset voltage	V_{IOPGA}					±10	mV
Input voltage range	V_{IPGA}			0		0.9 × V_{DD}/Gain	V
Output voltage range	V_{IOHPGA}			0.93 × V_{DD}			V
	V_{IOLPGA}					0.07 × V_{DD}	V
Gain error		x4, x8				±1	%
		x16				±1.5	%
		x32				±2	%
Slew rate	SR_{RPGA}	Rising When Vin= 0.1V_{DD}/gain to 0.9V_{DD}/gain. 10 to 90% of output voltage amplitude	4.0 V ≤ V_{DD} ≤ 5.5 V (Other than x32)	3.5			V/μs
			4.0 V ≤ V_{DD} ≤ 5.5 V (x32)	3.0			
			2.7 V ≤ V_{DD} ≤ 4.0V	0.5			
	SR_{FPGA}	Falling When Vin= 0.1V_{DD}/gain to 0.9V_{DD}/gain. 90 to 10% of output voltage amplitude	4.0 V ≤ V_{DD} ≤ 5.5 V (Other than x32)	3.5			
			4.0 V ≤ V_{DD} ≤ 5.5 V (x32)	3.0			
			2.7 V ≤ V_{DD} ≤ 4.0V	0.5			
Reference voltage stabilization wait time[Note 1]	t_{PGA}	x4, x8				5	μs
		x16, x32				10	μs
Operation current	I_{PGADD}	Separately, it is defined as the operation current of peripheral functions.					

Note 1. Time required until a state is entered where the DC and AC specifications of the PGA are satisfied after the PGA operation has been enabled (PGAEN = 1).

37.6.6 POR circuit characteristics

(T_A = -40 to +85°C, V_{SS} = 0 V)

Parameter	Symbol	Conditions	MIN.	TYP.	MAX.	Unit
Power on/down reset threshold	V_{POR}	Voltage threshold on V_{DD} rising	1.47	1.51	1.55	V
	V_{PDR}	Voltage threshold on V_{DD} falling Note 1	1.46	1.50	1.54	V
Minimum pulse width Note 2	T_{PW}		300			μs

Note 1. However, when the operating voltage falls while the LVD is off, enter STOP mode, or enable the reset status using the external reset pin before the voltage falls below the operating voltage range shown in **37.4 AC Characteristics**.

Note 2. Minimum time required for a POR reset when V_{DD} exceeds below V_{PDR}. This is also the minimum time required for a POR reset from when V_{DD} exceeds below 0.7 V to when V_{DD} exceeds V_{POR} while STOP mode is entered or the main system clock is stopped through setting bit 0 (HIOSTOP) and bit 7 (MSTOP) in the clock operation status control register (CSC).

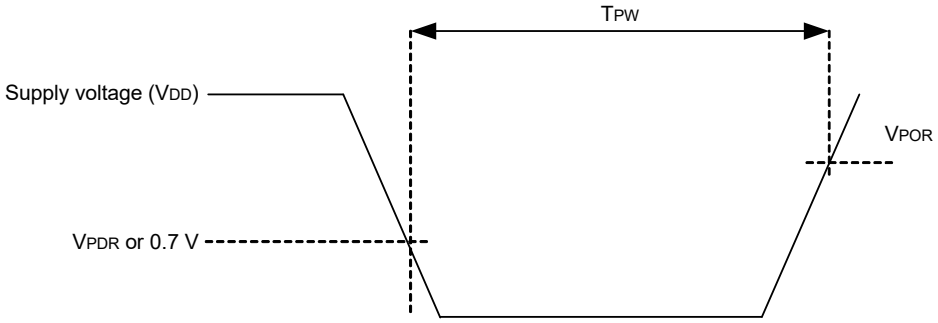

37.6.7 LVD circuit characteristics

(1) Reset Mode and Interrupt Mode

(T_A = -40 to +85°C, $V_{PDR} \le EV_{DD0} \le V_{DD} \le$ 5.5 V, $V_{SS} = EV_{SS0}$ = 0 V)

Parameter		Symbol	Conditions	MIN.	TYP.	MAX.	Unit
Voltage detection threshold	Supply voltage level	V_{LVD0}	Rising edge	3.98	4.06	4.14	V
			Falling edge	3.90	3.98	4.06	V
		V_{LVD1}	Rising edge	3.68	3.75	3.82	V
			Falling edge	3.60	3.67	3.74	V
		V_{LVD2}	Rising edge	3.07	3.13	3.19	V
			Falling edge	3.00	3.06	3.12	V
		V_{LVD3}	Rising edge	2.96	3.02	3.08	V
			Falling edge	2.90	2.96	3.02	V
		V_{LVD4}	Rising edge	2.86	2.92	2.97	V
			Falling edge	2.80	2.86	2.91	V
		V_{LVD5}	Rising edge	2.76	2.81	2.87	V
			Falling edge	2.70	2.75	2.81	V
		V_{LVD6}	Rising edge	2.66	2.71	2.76	V
			Falling edge	2.60	2.65	2.70	V
		V_{LVD7}	Rising edge	2.56	2.61	2.66	V
			Falling edge	2.50	2.55	2.60	V
		V_{LVD8}	Rising edge	2.45	2.50	2.55	V
			Falling edge	2.40	2.45	2.50	V
		V_{LVD9}	Rising edge	2.05	2.09	2.13	V
			Falling edge	2.00	2.04	2.08	V
		V_{LVD10}	Rising edge	1.94	1.98	2.02	V
			Falling edge	1.90	1.94	1.98	V
		V_{LVD11}	Rising edge	1.84	1.88	1.91	V
			Falling edge	1.80	1.84	1.87	V
		V_{LVD12}	Rising edge	1.74	1.77	1.81	V
			Falling edge	1.70	1.73	1.77	V
		V_{LVD13}	Rising edge	1.64	1.67	1.70	V
			Falling edge	1.60	1.63	1.66	V
Minimum pulse width		t_{LW}		300			μs
Detection delay time						300	μs

(2) Interrupt & Reset Mode

(T_A = -40 to +85°C, $V_{PDR} \le EV_{DD0} \le V_{DD} \le$ 5.5 V, $V_{SS} = EV_{SS0}$ = 0 V)

Parameter	Symbol	Conditions			MIN.	TYP.	MAX.	Unit
Voltage detection threshold	V_{LVDA0}	V_{POC2}, V_{POC1}, V_{POC0} = 0, 0, 0, falling reset voltage			1.60	1.63	1.66	V
	V_{LVDA1}		LVIS1, LVIS0 = 1, 0	Rising release reset voltage	1.74	1.77	1.81	V
				Falling interrupt voltage	1.70	1.73	1.77	V
	V_{LVDA2}		LVIS1, LVIS0 = 0, 1	Rising release reset voltage	1.84	1.88	1.91	V
				Falling interrupt voltage	1.80	1.84	1.87	V
	V_{LVDA3}		LVIS1, LVIS0 = 0, 0	Rising release reset voltage	2.86	2.92	2.97	V
				Falling interrupt voltage	2.80	2.86	2.91	V
	V_{LVDB0}	V_{POC2}, V_{POC1}, V_{POC0} = 0, 0, 1, falling reset voltage			1.80	1.84	1.87	V
	V_{LVDB1}		LVIS1, LVIS0 = 1, 0	Rising release reset voltage	1.94	1.98	2.02	V
				Falling interrupt voltage	1.90	1.94	1.98	V
	V_{LVDB2}		LVIS1, LVIS0 = 0, 1	Rising release reset voltage	2.05	2.09	2.13	V
				Falling interrupt voltage	2.00	2.04	2.08	V
	V_{LVDB3}		LVIS1, LVIS0 = 0, 0	Rising release reset voltage	3.07	3.13	3.19	V
				Falling interrupt voltage	3.00	3.06	3.12	V
	V_{LVDC0}	V_{POC2}, V_{POC1}, V_{POC0} = 0, 1, 0, falling reset voltage			2.40	2.45	2.50	V
	V_{LVDC1}		LVIS1, LVIS0 = 1, 0	Rising release reset voltage	2.56	2.61	2.66	V
				Falling interrupt voltage	2.50	2.55	2.60	V
	V_{LVDC2}		LVIS1, LVIS0 = 0, 1	Rising release reset voltage	2.66	2.71	2.76	V
				Falling interrupt voltage	2.60	2.65	2.70	V
	V_{LVDC3}		LVIS1, LVIS0 = 0, 0	Rising release reset voltage	3.68	3.75	3.82	V
				Falling interrupt voltage	3.60	3.67	3.74	V
	V_{LVDD0}	V_{POC2}, V_{POC1}, V_{POC0} = 0, 1, 1, falling reset voltage			2.70	2.75	2.81	V
	V_{LVDD1}		LVIS1, LVIS0 = 1, 0	Rising release reset voltage	2.86	2.92	2.97	V
				Falling interrupt voltage	2.80	2.86	2.91	V
	V_{LVDD2}		LVIS1, LVIS0 = 0, 1	Rising release reset voltage	2.96	3.02	3.08	V
				Falling interrupt voltage	2.90	2.96	3.02	V
	V_{LVDD3}		LVIS1, LVIS0 = 0, 0	Rising release reset voltage	3.98	4.06	4.14	V
				Falling interrupt voltage	3.90	3.98	4.06	V

37.6.8 Power supply voltage rising slope characteristics

(T_A = -40 to +85°C, V_{SS} = 0 V)

Parameter	Symbol	Conditions	MIN.	TYP.	MAX.	Unit
Power supply voltage rising slope	S_{VDD}				54	V/ms

Caution Make sure to keep the internal reset state by the LVD circuit or an external reset until V_{DD} reaches the operating voltage range shown in 37.4 AC Characteristics.

37.7 RAM Data Retention Characteristics

(T_A = -40 to +85°C, V_{SS} = 0V))

Parameter	Symbol	Conditions	MIN.	TYP.	MAX.	Unit
Data retention supply voltage	V_{DDDR}		1.46 Notes 1, 2		5.5	V

Note 1. The value depends on the POR detection voltage. When the voltage drops, the RAM data is retained before a POR reset is effected, but RAM data is not retained when a POR reset is effected.

Note 2. Enter STOP mode before the supply voltage falls below the recommended operating voltage.

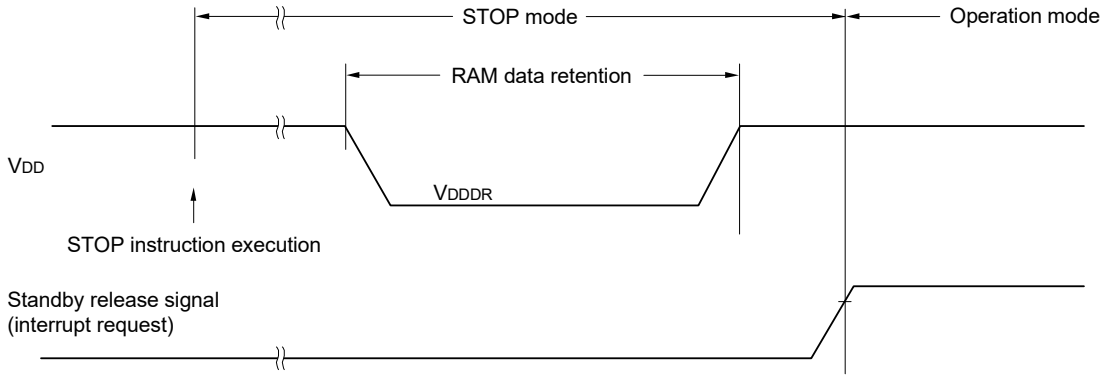

37.8 Flash Memory Programming Characteristics

(T_A = -40 to +85°C, 1.8 V ≤ V_{DD} ≤ 5.5 V, V_{SS} = 0 V)

Parameter	Symbol	Conditions		MIN.	TYP.	MAX.	Unit
System clock frequency	f_{CLK}	1.8 V ≤ V_{DD} ≤ 5.5 V		1		32	MHz
Number of code flash rewrites Notes 1, 2, 3	C_{erwr}	Retained for 20 years	T_A = 85°C	1,000			Times
Number of data flash rewrites Notes 1, 2, 3		Retained for 1 year	T_A = 25°C		1,000,000		
		Retained for 5 years	T_A = 85°C	100,000			
		Retained for 20 years	T_A = 85°C	10,000			

Note 1. 1 erase + 1 write after the erase is regarded as 1 rewrite. The retaining years are until next rewrite after the rewrite.

Note 2. When using flash memory programmer and Renesas Electronics self-programming library

Note 3. These are the characteristics of the flash memory and the results obtained from reliability testing by Renesas Electronics Corporation.

37.9 Dedicated Flash Memory Programmer Communication (UART)

(T_A = -40 to +85°C, 1.8 V ≤ EV_{DD0} ≤ V_{DD} ≤ 5.5 V, V_{SS} = EV_{SS0} = 0 V)

Parameter	Symbol	Conditions	MIN.	TYP.	MAX.	Unit
Transfer rate		During serial programming	115,200		1,000,000	bps

37.10 Timing of Entry to Flash Memory Programming Modes

(T_A = -40 to +85°C, 1.8 V ≤ EV_{DD0} ≤ V_{DD} ≤ 5.5 V, V_{SS} = EV_{SS0} = 0 V)

Parameter	Symbol	Conditions	MIN.	TYP.	MAX.	Unit
How long from when an external reset ends until the initial communication settings are specified	t_{SUINIT}	POR and LVD reset must end before the external reset ends.			100	ms
How long from when the TOOL0 pin is placed at the low level until an external reset ends	t_{SU}	POR and LVD reset must end before the external reset ends.	10			μs
How long the TOOL0 pin must be kept at the low level after an external reset ends (excluding the processing time of the firmware to control the flash memory)	t_{HD}	POR and LVD reset must end before the external reset ends.	1			ms

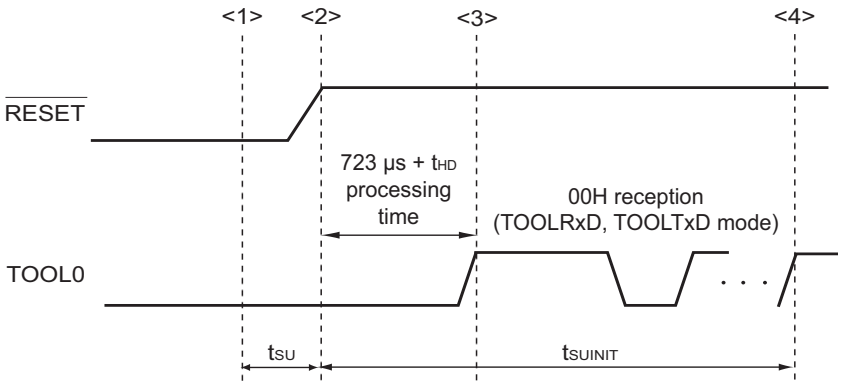

<1> The low level is input to the TOOL0 pin.
<2> The external reset ends (POR and LVD reset must end before the external reset ends).
<3> The TOOL0 pin is set to the high level.
<4> Setting of the flash memory programming mode by UART reception and complete the baud rate setting.

Remark t_{SUINIT}: The segment shows that it is necessary to finish specifying the initial communication settings within 100 ms from when the external resets end.
t_{SU}: How long from when the TOOL0 pin is placed at the low level until a pin reset ends
t_{HD}: How long to keep the TOOL0 pin at the low level from when the external resets end (excluding the processing time of the firmware to control the flash memory)

CHAPTER 38 ELECTRICAL SPECIFICATIONS (G: T_A = -40 to +105°C)

This chapter describes the following electrical specifications.

Target products G: Industrial applications T_A = −40 to +105°C
R5F11BxxGxx

Caution 1. The RL78 microcontrollers have an on-chip debug function, which is provided for development and evaluation. Do not use the on-chip debug function in products designated for mass production, because the guaranteed number of rewritable times of the flash memory may be exceeded when this function is used, and product reliability therefore cannot be guaranteed. Renesas Electronics is not liable for problems occurring when the on-chip debug function is used.

Caution 2. With products not provided with an EV_{DD0}, or EV_{SS0} pin, replace EV_{DD0} with V_{DD}, or replace EV_{SS0} with V_{SS}.

Caution 3. The pins mounted depend on the product. Refer to 2.1 Port Functions to 2.2.1 Functions for each product.

Caution 4. Please contact Renesas Electronics sales office for derating of operation under T_A = +85 to +105°C. Derating is the systematic reduction of load for the sake of improved reliability.

Remark When the products “G: Industrial applications" is used in the range of T_A = -40 to +85°C, see **CHAPTER 37 ELECTRICAL SPECIFICATIONS (T_A = -40 to +85°C)**.

Operation of products rated “G: Industrial applications (T_A = -40 to + 105°C)” at ambient operating temperatures above 85°C differs from that of products rated “A: Consumer applications” in the ways listed below.

Parameter	A: Consumer applications	G: Industrial applications
Operating ambient temperature	T_A = -40 to +85°C	T_A = -40 to +105°C
Operating mode Operating voltage range	HS (high-speed main) mode: 2.7 V ≤ V_{DD} ≤ 5.5 V@1 MHz to 32 MHz 2.4 V ≤ V_{DD} ≤ 5.5 V@1 MHz to 16 MHz LS (low-speed main) mode: 1.8 V ≤ V_{DD} ≤ 5.5 V@1 MHz to 8 MHz LV (low-voltage main) mode: 2.4 V ≤ V_{DD} ≤ 5.5 V@1 MHz to 4 MHz	HS (high-speed main) mode only: 2.7 V ≤ V_{DD} ≤ 5.5 V@1 MHz to 32 MHz 2.4 V ≤ V_{DD} ≤ 5.5 V@1 MHz to 16 MHz
High-speed on-chip oscillator clock accuracy	1.8 V ≤ V_{DD} ≤ 5.5 V: ±1.0% @ T_A = -20 to +85°C ±1.5% @ T_A = -40 to -20°C 2.4 V ≤ V_{DD} < 1.8 V: ±5.0% @ T_A = -20 to +85°C ±5.5% @ T_A = -40 to -20°C	2.4 V ≤ V_{DD} ≤ 5.5 V: ±2.0% @ T_A = +85 to +105°C ±1.0% @ T_A = -20 to +85°C ±1.5% @ T_A = -40 to -20°C
Serial array unit	UART Simplified SPI (CSI): f_{CLK}/2 (16 Mbps supported), f_{CLK}/4 Simplified I^2C communication	UART Simplified SPI (CSI): f_{CLK}/4 Simplified I^2C communication
IICA	Standard mode Fast mode Fast mode plus	Standard mode Fast mode
Voltage detector	• Rising: 1.67 V to 4.06 V (14 stages) • Falling: 1.63 V to 3.98 V (14 stages)	• Rising: 2.61 V to 4.06 V (8 stages) • Falling: 2.55 V to 3.98 V (8 stages)

Remark The electrical characteristics of products rated “G: Industrial applications (T_A = -40 to + 105°C)” at ambient operating temperatures above 85°C differ from those of products “A: Consumer applications”. For details, refer to **38.1** to **38.10**.

38.1 Absolute Maximum Ratings

Absolute Maximum Ratings **(1/2)**

Parameter	Symbols	Conditions	Ratings	Unit
Supply voltage	V_{DD}		-0.5 to +6.5	V
	EV_{DD0}		-0.5 to +6.5	V
REGC pin input voltage	V_{IREGC}	REGC	-0.3 to +2.8 and -0.3 to V_{DD} +0.3 Note 1	V
Input voltage	V_{I1}	P00 to P06, P10 to P17, P30, P31, P40 to P43, P50 to P55, P70 to P77, P120, P140, P141, P146, P147	-0.3 to EV_{DD0} +0.3 and -0.3 to V_{DD} +0.3 Note 2	V
	V_{I2}	P60 to P63 (N-ch open-drain)	-0.3 to +6.5	V
	V_{I3}	P20 to P27, P121 to P124, P137, EXCLK, EXCLKS, $\overline{\text{RESET}}$	-0.3 to V_{DD} +0.3 Note 2	V
Output voltage	V_{O1}	P00 to P06, P10 to P17, P30, P31, P40 to P43, P50 to P55, P60 to P63, P70 to P77, P120, P130, P140, P141, P146, P147	-0.3 to EV_{DD0} +0.3 and -0.3 to V_{DD} +0.3 Note 2	V
	V_{O2}	P20 to P27	-0.3 to V_{DD} +0.3 Note 2	V
Analog input voltage	V_{AI1}	ANI16 to ANI24	-0.3 to EV_{DD0} +0.3 and -0.3 to $AV_{REF}(+)$ +0.3 Notes 2, 3	V
	V_{AI2}	ANI0 to ANI7	-0.3 to V_{DD} +0.3 and -0.3 to $AV_{REF}(+)$ +0.3 Notes 2, 3	V

Note 1. Connect the REGC pin to V_{SS} via a capacitor (0.47 to 1 μF). This value regulates the absolute maximum rating of the REGC pin. Do not use this pin with voltage applied to it.

Note 2. Must be 6.5 V or lower.

Note 3. Do not exceed AV_{REF} (+) + 0.3 V in case of A/D conversion target pin.

Caution **Product quality may suffer if the absolute maximum rating is exceeded even momentarily for any parameter. That is, the absolute maximum ratings are rated values at which the product is on the verge of suffering physical damage, and therefore the product must be used under conditions that ensure that the absolute maximum ratings are not exceeded.**

Remark 1. Unless specified otherwise, the characteristics of alternate-function pins are the same as those of the port pins.

Remark 2. AV_{REF} (+): + side reference voltage of the A/D converter.

Remark 3. V_{SS}: Reference voltage

Absolute Maximum Ratings **(2/2)**

Parameter	Symbols	Conditions		Ratings	Unit
Output current, high	I_{OH1}	Per pin	P00 to P06, P10 to P17, P30, P31, P40 to P43, P50 to P55, P70 to P77, P120, P130, P140, P141, P146, P147	-40	mA
		Total of all pins -170 mA	P00 to P04, P40 to P43,P120, P130, P140, P141	-70	mA
			P05, P06, P10 to P17, P30, P31, P50 to P55, P70 to P77, P146, P147	-100	mA
	I_{OH2}	Per pin	P20 to P27	-0.5	mA
		Total of all pins		-2	mA
Output current, low	I_{OL1}	Per pin	P00 to P06, P10 to P17, P30, P31, P40-P43, P50 to P55, P60 to P63, P70 to P77, P120, P130, P140, P141, P146, P147	40	mA
		Total of all pins 170 mA	P00 to P04, P40 to P47, P120, P130, P140, P141	70	mA
			P05, P06, P10 to P17, P30, P31, P50 to P55, P70 to P77, P146, P147	100	mA
	I_{OL2}	Per pin	P20 to P27	1	mA
		Total of all pins		5	mA
Operating ambient temperature	T_A	In normal operation mode		-40 to +105	°C
		In flash memory programming mode			
Storage temperature	T_{stg}			-65 to +150	°C

Caution **Product quality may suffer if the absolute maximum rating is exceeded even momentarily for any parameter. That is, the absolute maximum ratings are rated values at which the product is on the verge of suffering physical damage, and therefore the product must be used under conditions that ensure that the absolute maximum ratings are not exceeded.**

Remark Unless specified otherwise, the characteristics of alternate-function pins are the same as those of the port pins.

38.2 Oscillator Characteristics

38.2.1 X1, XT1 characteristics

(T_A = -40 to +105°C, 2.4 V ≤ EV_{DD0} = V_{DD} ≤ 5.5 V, V_{SS} = 0 V)

Resonator	Resonator	Conditions	MIN.	TYP.	MAX.	Unit
X1 clock oscillation frequency (f_X) Note	Ceramic resonator/ crystal resonator	2.7 V ≤ V_{DD} ≤ 5.5 V	1.0		20.0	MHz
		2.4 V ≤ V_{DD} < 2.7 V	1.0		16.0	
XT1 clock oscillation frequency (f_{XT}) Note	Crystal resonator		32	32.768	35	kHz

Note Indicates only permissible oscillator frequency ranges. Refer to **AC Characteristics** for instruction execution time. Request evaluation by the manufacturer of the oscillator circuit mounted on a board to check the oscillator characteristics.

Caution **Since the CPU is started by the high-speed on-chip oscillator clock after a reset release, check the X1 clock oscillation stabilization time using the oscillation stabilization time counter status register (OSTC) by the user. Determine the oscillation stabilization time of the OSTC register and the oscillation stabilization time select register (OSTS) after sufficiently evaluating the oscillation stabilization time with the resonator to be used.**

Remark When using the X1 oscillator and XT1 oscillator, refer to **5.4 System Clock Oscillator**.

38.2.2 On-chip oscillator characteristics

(T_A = -40 to +105°C, 2.4 V ≤ EV_{DD0} = V_{DD} ≤ 5.5 V, V_{SS} = 0 V)

Oscillators	Parameters	Conditions	MIN.	TYP.	MAX.	Unit
High-speed on-chip oscillator clock frequency Notes 1, 2	f_{IH}	2.7 V ≤ V_{DD} ≤ 5.5 V	1		32	MHz
		2.4 V ≤ V_{DD} < 2.7 V	1		16	MHz
High-speed on-chip oscillator clock frequency accuracy		T_A = +85 to +105°C	-2		2	%
		T_A = -20 to +85°C	-1		1	%
		T_A = -40 to -20°C	-1.5		1.5	%
Low-speed on-chip oscillator clock frequency	f_{IL}			15		kHz
Low-speed on-chip oscillator clock frequency accuracy			-15		+15	%

Note 1. High-speed on-chip oscillator frequency is selected with bits 0 to 4 of the option byte (000C2H/010C2H) and bits 0 to 2 of the HOCODIV register.

Note 2. This only indicates the oscillator characteristics. Refer to **AC Characteristics** for instruction execution time.

38.3 DC Characteristics

38.3.1 Pin characteristics

(T_A = -40 to +105°C, 2.4 V ≤ EV_{DD0} ≤ V_{DD} ≤ 5.5 V, V_{SS} = EV_{SS0} = 0 V) **(1/5)**

Items	Symbol	Conditions		MIN.	TYP.	MAX.	Unit
Output current, high Note 1	I_{OH1}	Per pin for P00 to P06, P10 to P17, P30, P31, P40 to P47, P50 to P55, P70 to P77, P120, P130, P140, P141, P146, P147				-3.0 Note 2	mA
		Total of P00 to P04, P40 to P43, P120, P130, P140, P141 (When duty ≤ 70% Note 3)	4.0 V ≤ EV_{DD0} ≤ 5.5 V			-30.0	mA
			2.7 V ≤ EV_{DD0} < 4.0 V			-10.0	mA
			2.4 V ≤ EV_{DD0} < 2.7 V			-5.0	mA
		Total of P05, P06, P10 to P17, P30, P31, P50 to P53, P70 to P77, P146, P147 (When duty ≤ 70% Note 3)	4.0 V ≤ EV_{DD0} ≤ 5.5 V			-30.0	mA
			2.7 V ≤ EV_{DD0} < 4.0 V			-19.0	mA
			1.8 V ≤ EV_{DD0} < 2.7 V			-10.0	mA
		Total of all pins (When duty ≤ 70% Note 3)				-60.0	mA
	I_{OH2}	Per pin for P20 to P27				-0.1 Note 2	mA
		Total of all pins (When duty ≤ 70% Note 3)	2.4 V ≤ V_{DD} ≤ 5.5 V			-1.5	mA

Note 1. Value of current at which the device operation is guaranteed even if the current flows from the EV_{DD0}, V_{DD} pins to an output pin.

Note 2. Do not exceed the total current value.

Note 3. Specification under conditions where the duty factor ≤ 70%.
The output current value that has changed to the duty factor > 70% the duty ratio can be calculated with the following expression (when changing the duty factor from 70% to n%).

- Total output current of pins = (I_{OH} × 0.7)/(n × 0.01)
  <Example> Where n = 80% and I_{OH} = -10.0 mA
  Total output current of pins = (-10.0 × 0.7)/(80 × 0.01) ≈ -8.7 mA

However, the current that is allowed to flow into one pin does not vary depending on the duty factor.
A current higher than the absolute maximum rating must not flow into one pin.

Caution **P00, P02 to P04, P10, P11, P13 to P15, P17, P30, P43, P50 to P55, P71, P74 do not output high level in N-ch open-drain mode.**

Remark Unless specified otherwise, the characteristics of alternate-function pins are the same as those of the port pins.

(T_A = -40 to +105°C, 2.4 V ≤ EV_{DD0} ≤ V_{DD} ≤ 5.5 V, V_{SS} = EV_{SS0} = 0 V) **(2/5)**

Items	Symbol	Conditions		MIN.	TYP.	MAX.	Unit
Output current, low Note 1	I_{OL1}	Per pin for P00 to P06, P10 to P17, P30, P31, P40 to P43, P50 to P55, P70 to P77,P120, P130, P140, P141, P146, P147				8.5 Note 2	mA
		Per pin for P60 to P63				15.0 Note 2	mA
		Total of P00 to P04, P40 to P43, P120, P130, P140, P141 (When duty ≤ 70% Note 3)	4.0 V ≤ EV_{DD0} ≤ 5.5 V			40.0	mA
			2.7 V ≤ EV_{DD0} < 4.0 V			15.0	mA
			2.4 V ≤ EV_{DD0} < 1.8 V			9.0	mA
		Total of P05, P06, P10 to P17, P30, P31, P50 to P55, P60 to P63, P70 to P77, P146, P147 (When duty ≤ 70% Note 3)	4.0 V ≤ EV_{DD0} ≤ 5.5 V			40.0	mA
			2.7 V ≤ EV_{DD0} < 4.0 V			35.0	mA
			2.4 V ≤ EV_{DD0} < 1.8 V			20.0	mA
		Total of all pins (When duty ≤ 70% Note 3)				80.0	mA
	I_{OL2}	Per pin for P20 to P27				0.4 Note 2	mA
		Total of all pins (When duty ≤ 70% Note 3)	2.4 V ≤ V_{DD} ≤ 5.5 V			5.0	mA

Note 1. Value of current at which the device operation is guaranteed even if the current flows from an output pin to the EV_{SS0} and V_{SS} pins.

Note 2. Do not exceed the total current value.

Note 3. Specification under conditions where the duty factor ≤ 70%.
The output current value that has changed to the duty factor > 70% the duty ratio can be calculated with the following expression (when changing the duty factor from 70% to n%).

- Total output current of pins = (I_{OL} × 0.7)/(n × 0.01)
  <Example> Where n = 80% and I_{OL} = 10.0 mA
  Total output current of pins = (10.0 × 0.7)/(80 × 0.01) ≈ 8.7 mA
  However, the current that is allowed to flow into one pin does not vary depending on the duty factor.
  A current higher than the absolute maximum rating must not flow into one pin.

Remark Unless specified otherwise, the characteristics of alternate-function pins are the same as those of the port pins.

(T_A = -40 to +105°C, 2.4 V ≤ EV_{DD0} ≤ V_{DD} ≤ 5.5 V, V_{SS} = EV_{SS0} = 0 V) **(3/5)**

Items	Symbol	Conditions		MIN.	TYP.	MAX.	Unit
Input voltage, high	V_{IH1}	P00 to P06, P10 to P17, P30, P31, P40 to P43, P50 to P55, P70 to P77, P120, P140, P141, P146, P147	Normal input buffer	0.8 EV_{DD0}		EV_{DD0}	V
	V_{IH2}	P01, P03, P04, P10, P14 to P17, P30, P43, P50, P53 to P55,	TTL input buffer 4.0 V ≤ EV_{DD0} ≤ 5.5 V	2.2		EV_{DD0}	V
			TTL input buffer 3.3 V ≤ EV_{DD0} < 4.0 V	2.0		EV_{DD0}	V
			TTL input buffer 2.4 V ≤ EV_{DD0} < 3.3 V	1.5		EV_{DD0}	V
	V_{IH3}	P20 to P27 (when P20 is used as a port pin)		0.7 V_{DD}		V_{DD}	V
	V_{IH4}	P60 to P63		0.7 EV_{DD0}		6.0	V
	V_{IH5}	P121 to P123, P137, EXCLK, EXCLKS, $\overline{RESET}$ (when P20 is used as INTP11 pin)		0.8 V_{DD}		V_{DD}	V
Input voltage, low	V_{IL1}	P00 to P06, P10 to P17, P30, P31, P40 to P43, P50 to P55, P70 to P77, P120, P140, P141, P146, P147	Normal input buffer	0		0.2 EV_{DD0}	V
	V_{IL2}	P01, P03, P04, P10, P14 to P17, P30, P43, P50, P53 to P55,	TTL input buffer 4.0 V ≤ EV_{DD0} ≤ 5.5 V	0		0.8	V
			TTL input buffer 3.3 V ≤ EV_{DD0} < 4.0 V	0		0.5	V
			TTL input buffer 2.4 V ≤ EV_{DD0} < 3.3 V	0		0.32	V
	V_{IL3}	P20 to P27 (when P20 is used as a port pin)		0		0.3 V_{DD}	V
	V_{IL4}	P60 to P63		0		0.3 EV_{DD0}	V
	V_{IL5}	P121 to P124, P137, EXCLK, EXCLKS, $\overline{RESET}$ (when P20 is used as INTP11 pin)		0		0.2 V_{DD}	V

Caution **The maximum value of V_{IH} of pins P00, P02 to P04, P10, P11, P13 to P15, P17, P30, P43, P50 to P55, P71, P74 is EV_{DD0}, even in the N-ch open-drain mode.**

Remark Unless specified otherwise, the characteristics of alternate-function pins are the same as those of the port pins.

(T_A = -40 to +105°C, 2.4 V ≤ EV_{DD0} ≤ V_{DD} ≤ 5.5 V, V_{SS} = EV_{SS0} = 0 V) **(4/5)**

Items	Symbol	Conditions		MIN.	TYP.	MAX.	Unit
Output voltage, high	V_{OH1}	P00 to P06, P10 to P17, P30, P31, P40 to P43, P50 to P55, P70 to P77, P120, P130, P140, P141, P146, P147	4.0 V ≤ EV_{DD0} ≤ 5.5 V, I_{OH1} = -3.0 mA	EV_{DD0} - 0.7			V
			2.7 V ≤ EV_{DD0} ≤ 5.5 V, I_{OH1} = -2.0 mA	EV_{DD0} - 0.6			V
			2.4 V ≤ EV_{DD0} < 5.5 V, I_{OH1} = -1.5 mA	EV_{DD0} - 0.5			V
	V_{OH2}	P20 to P27	2.4 V ≤ V_{DD} ≤ 5.5 V, I_{OH2} = -100 μA	V_{DD} - 0.5			V
Output voltage, low	V_{OL1}	P00 to P06, P10 to P17, P30, P31, P40 to P43, P50 to P55, P70 to P77, P120, P130, P140, P141, P146, P147	4.0 V ≤ EV_{DD0} ≤ 5.5 V, I_{OL1} = 8.5 mA			0.7	V
			2.7 V ≤ EV_{DD0} ≤ 5.5 V, I_{OL1} = 3.0 mA			0.6	V
			2.7 V ≤ EV_{DD0} ≤ 5.5 V, I_{OL1} = 1.5 mA			0.4	V
			2.4 V ≤ EV_{DD0} ≤ 5.5 V, I_{OL1} = 0.6 mA			0.4	V
	V_{OL2}	P20 to P27	2.4 V ≤ V_{DD} ≤ 5.5 V, I_{OL2} = 400 μA			0.4	V
	V_{OL3}	P60 to P63	4.0 V ≤ EV_{DD0} ≤ 5.5 V, I_{OL3} = 15.0 mA			2.0	V
			4.0 V ≤ EV_{DD0} ≤ 5.5 V, I_{OL3} = 5.0 mA			0.4	V
			2.7 V ≤ EV_{DD0} ≤ 5.5 V, I_{OL3} = 3.0 mA			0.4	V
			2.4 V ≤ EV_{DD0} ≤ 5.5 V, I_{OL3} = 2.0 mA			0.4	V

Caution **P00, P02 to P04, P10, P11, P13 to P15, P17, P30, P43, P50 to P55, P71, P74 do not output high level in N-ch open-drain mode.**

Remark Unless specified otherwise, the characteristics of alternate-function pins are the same as those of the port pins.

(T_A = -40 to +105°C, 2.4 V ≤ EV_{DD0} ≤ V_{DD} ≤ 5.5 V, V_{SS} = EV_{SS0} = 0 V) **(5/5)**

Items	Symbol	Conditions			MIN.	TYP.	MAX.	Unit
Input leakage current, high	I_{LIH1}	P00 to P06, P10 to P17, P30, P31, P40 to P43, P50 to P55, P70 to P77, P120, P140, P141, P146, P147	V_I = EV_{DD0}				1	μA
	I_{LIH2}	P20 to P27, P137, $\overline{RESET}$	V_I = V_{DD}				1	μA
	I_{LIH3}	P121 to P124 (X1, X2, EXCLK, XT1, XT2, EXCLKS)	V_I = V_{DD}	In input port or external clock input			1	μA
				In resonator connection			10	μA
Input leakage current, low	I_{LIL1}	P00 to P06, P10 to P17, P30, P31, P40 to P43, P50 to P55, P70 to P77, P120, P140, P141, P146, P147	V_I = EV_{SS0}				-1	μA
	I_{LIL2}	P20 to P27, P137, $\overline{RESET}$	V_I = V_{SS}				-1	μA
	I_{LIL3}	P121 to P124 (X1, X2, EXCLK, XT1, XT2, EXCLKS)	V_I = V_{SS}	In input port or external clock input			-1	μA
				In resonator connection			-10	μA
On-chip pull-up resistance	R_U	P00 to P06, P10 to P17, P30, P31, P40 to P43, P50 to P55, P70 to P77, P120, P140, P141, P146, P147	V_I = EV_{SS0}, In input port		10	20	100	kΩ

Remark Unless specified otherwise, the characteristics of alternate-function pins are the same as those of the port pins.

38.3.2 Supply current characteristics

(T_A = -40 to +105°C, 2.4 V ≤ EV_{DD0} ≤ V_{DD} ≤ 5.5 V, V_{SS} = EV_{SS0} = 0 V) **(1/2)**

Parameter	Symbol	Conditions					MIN.	TYP.	MAX.	Unit
Supply current Note 1	I_{DD1}	Operating mode	HS (high-speed main) mode Note 5	f_{HOCO} = 64 MHz, f_{IH} = 32 MHz Note 3	Basic operation	V_{DD} = 5.0 V		2.4		mA
						V_{DD} = 3.0 V		2.4		
				f_{HOCO} = 32 MHz, f_{IH} = 32 MHz Note 3	Basic operation	V_{DD} = 5.0 V		2.1		
						V_{DD} = 3.0 V		2.1		
			HS (high-speed main) mode Note 5	f_{HOCO} = 64 MHz, f_{IH} = 32 MHz Note 3	Normal operation	V_{DD} = 5.0 V		5.2	9.3	mA
						V_{DD} = 3.0 V		5.2	9.3	
				f_{HOCO} = 32 MHz, f_{IH} = 32 MHz Note 3	Normal operation	V_{DD} = 5.0 V		4.8	8.7	
						V_{DD} = 3.0 V		4.8	8.7	
				f_{HOCO} = 48 MHz, f_{IH} = 24 MHz Note 3	Normal operation	V_{DD} = 5.0 V		4.1	7.3	
						V_{DD} = 3.0 V		4.1	7.3	
				f_{HOCO} = 24 MHz, f_{IH} = 24 MHz Note 3	Normal operation	V_{DD} = 5.0 V		3.8	6.7	
						V_{DD} = 3.0 V		3.8	6.7	
				f_{HOCO} = 16 MHz, f_{IH} = 16 MHz Note 3	Normal operation	V_{DD} = 5.0 V		2.8	4.9	
						V_{DD} = 3.0 V		2.8	4.9	
			HS (high-speed main) mode Note 5	f_{MX} = 20 MHz Note 2, V_{DD} = 5.0 V	Normal operation	Square wave input		3.3	5.7	mA
						Resonator connection		3.5	5.8	
				f_{MX} = 20 MHz Note 2, V_{DD} = 3.0 V	Normal operation	Square wave input		3.3	5.7	
						Resonator connection		3.5	5.8	
				f_{MX} = 10 MHz Note 2, V_{DD} = 5.0 V	Normal operation	Square wave input		2.0	3.4	
						Resonator connection		2.1	3.5	
				f_{MX} = 10 MHz Note 2, V_{DD} = 3.0 V	Normal operation	Square wave input		2.0	3.4	
						Resonator connection		2.1	3.5	
			Subsystem clock operation	f_{SUB} = 32.768 kHz Note 4 T_A = -40°C	Normal operation	Square wave input		4.7	6.1	μA
						Resonator connection		4.7	6.1	
				f_{SUB} = 32.768 kHz Note 4 T_A = +25°C	Normal operation	Square wave input		4.7	6.1	
						Resonator connection		4.7	6.1	
				f_{SUB} = 32.768 kHz Note 4 T_A = +50°C	Normal operation	Square wave input		4.8	6.7	
						Resonator connection		4.8	6.7	
				f_{SUB} = 32.768 kHz Note 4 T_A = +70°C	Normal operation	Square wave input		4.8	7.5	
						Resonator connection		4.8	7.5	
				f_{SUB} = 32.768 kHz Note 4 T_A = +85°C	Normal operation	Square wave input		5.4	8.9	
						Resonator connection		5.4	8.9	
				f_{SUB} = 32.768 kHz Note 4 T_A = +105°C	Normal operation	Square wave input		7.2	21.0	
						Resonator connection		7.3	21.1	

(**Notes** and **Remarks** are listed on the next page.)

Note 1. Total current flowing into V_{DD} and EV_{DD0}, including the input leakage current flowing when the level of the input pin is fixed to V_{DD}, EV_{DD0} or V_{SS}, EV_{SS0}. The following points apply in the HS (high-speed main) mode.

- The currents in the "TYP." column do not include the operating currents of the peripheral modules.
- The currents in the "MAX." column include the operating currents of the peripheral modules, except for those flowing into the A/D converter, D/A converter, comparator, LVD circuit, I/O port, and on-chip pull-up/pull-down resistors, and those flowing while the data flash memory is being rewritten.

In the subsystem clock operation, the currents in both the "TYP." and "MAX." columns do not include the operating currents of the peripheral modules. However, in HALT mode, including the current flowing into the RTC.

Note 2. When high-speed on-chip oscillator and subsystem clock are stopped.

Note 3. When high-speed system clock and subsystem clock are stopped.

Note 4. When high-speed on-chip oscillator and high-speed system clock are stopped. When AMPHS1 = 1 (Ultra-low power consumption oscillation).

Note 5. Relationship between operation voltage width, operation frequency of CPU and operation mode is as below.

HS (high-speed main) mode: 2.7 V ≤ V_{DD} ≤ 5.5 V@1 MHz to 32 MHz
2.4 V ≤ V_{DD} ≤ 5.5 V@1 MHz to 16 MHz

Remark 1. f_{MX}: High-speed system clock frequency (X1 clock oscillation frequency or external main system clock frequency)

Remark 2. f_{HOCO}: High-speed on-chip oscillator clock frequency (64 MHz max.)

Remark 3. f_{IH}: High-speed on-chip oscillator clock frequency (32 MHz max.)

Remark 4. f_{SUB}: Subsystem clock frequency (XT1 clock oscillation frequency)

Remark 5. Except subsystem clock operation, temperature condition of the TYP. value is T_A = 25°C

(T_A = -40 to +105°C, 2.4 V ≤ EV_{DD0} ≤ V_{DD} ≤ 5.5 V, V_{SS} = EV_{SS0} = 0 V) **(2/2)**

Parameter	Symbol	Conditions				MIN.	TYP.	MAX.	Unit
Supply current Note 1	I_{DD2} Note 2	HALT mode	HS (high-speed main) mode Note 6	f_{HOCO} = 64 MHz, f_{IH} = 32 MHz Note 4	V_{DD} = 5.0 V		0.80	4.36	mA
					V_{DD} = 3.0 V		0.80	4.36	
				f_{HOCO} = 32 MHz, f_{IH} = 32 MHz Note 4	V_{DD} = 5.0 V		0.54	3.67	
					V_{DD} = 3.0 V		0.54	3.67	
				f_{HOCO} = 48 MHz, f_{IH} = 24 MHz Note 4	V_{DD} = 5.0 V		0.62	3.42	
					V_{DD} = 3.0 V		0.62	3.42	
				f_{HOCO} = 24 MHz, f_{IH} = 24 MHz Note 4	V_{DD} = 5.0 V		0.44	2.85	
					V_{DD} = 3.0 V		0.44	2.85	
				f_{HOCO} = 16 MHz, f_{IH} = 16 MHz Note 4	V_{DD} = 5.0 V		0.40	2.08	
					V_{DD} = 3.0 V		0.40	2.08	
			HS (high-speed main) mode Note 6	f_{MX} = 20 MHz Note 3, V_{DD} = 5.0 V	Square wave input		0.28	2.45	mA
					Resonator connection		0.49	2.57	
				f_{MX} = 20 MHz Note 3, V_{DD} = 3.0 V	Square wave input		0.28	2.45	
					Resonator connection		0.49	2.57	
				f_{MX} = 10 MHz Note 3, V_{DD} = 5.0 V	Square wave input		0.19	1.28	
					Resonator connection		0.30	1.36	
				f_{MX} = 10 MHz Note 3, V_{DD} = 3.0 V	Square wave input		0.19	1.28	
					Resonator connection		0.30	1.36	
			Subsystem clock operation	f_{SUB} = 32.768 kHz Note 5, T_A = -40°C	Square wave input		0.25	0.57	μA
					Resonator connection		0.44	0.76	
				f_{SUB} = 32.768 kHz Note 5, T_A = +25°C	Square wave input		0.30	0.57	
					Resonator connection		0.49	0.76	
				f_{SUB} = 32.768 kHz Note 5, T_A = +50°C	Square wave input		0.36	1.17	
					Resonator connection		0.59	1.36	
				f_{SUB} = 32.768 kHz Note 5, T_A = +70°C	Square wave input		0.49	1.97	
					Resonator connection		0.72	2.16	
				f_{SUB} = 32.768 kHz Note 5, T_A = +85°C	Square wave input		0.97	3.37	
					Resonator connection		1.16	3.56	
				f_{SUB} = 32.768 kHz Note 5, T_A = +105°C	Square wave input		3.20	17.10	
					Resonator connection		3.40	17.50	
	I_{DD3}	STOP mode Note 7	T_A = -40°C				0.18	0.51	μA
			T_A = +25°C				0.24	0.51	
			T_A = +50°C				0.29	1.10	
			T_A = +70°C				0.41	1.90	
			T_A = +85°C				0.90	3.30	
			T_A = +105°C				3.10	17.00	

(**Notes** and **Remarks** are listed on the next page.)

Note 1. Total current flowing into V_{DD} and EV_{DD0}, including the input leakage current flowing when the level of the input pin is fixed to V_{DD}, EV_{DD0} or V_{SS}, EV_{SS0}. The following points apply in the HS (high-speed main) mode.

- The currents in the "TYP." column do not include the operating currents of the peripheral modules.
- The currents in the "MAX." column include the operating currents of the peripheral modules, except for those flowing into the A/D converter, D/A converter, comparator, LVD circuit, I/O port, and on-chip pull-up/pull-down resistors, and those flowing while the data flash memory is being rewritten.

In the subsystem clock operation, the currents in both the "TYP." and "MAX." columns do not include the operating currents of the peripheral modules. However, in HALT mode, including the current flowing into the RTC.

In the STOP mode, the currents in both the "TYP." and "MAX." columns do not include the operating currents of the peripheral modules.

Note 2. During HALT instruction execution by flash memory.

Note 3. When high-speed on-chip oscillator and subsystem clock are stopped.

Note 4. When high-speed system clock and subsystem clock are stopped.

Note 5. When high-speed on-chip oscillator and high-speed system clock are stopped. When RTCLPC = 1 and setting ultra-low current consumption (AMPHS1 = 1).

Note 6. Relationship between operation voltage width, operation frequency of CPU and operation mode is as below.

HS (high-speed main) mode: 2.7 V ≤ V_{DD} ≤ 5.5 V@1 MHz to 32 MHz
2.4 V ≤ V_{DD} ≤ 5.5 V@1 MHz to 16 MHz

Note 7. Regarding the value for current to operate the subsystem clock in STOP mode, refer to that in HALT mode.

Remark 1. f_{MX}: High-speed system clock frequency (X1 clock oscillation frequency or external main system clock frequency)

Remark 2. f_{HOCO}: High-speed on-chip oscillator clock frequency (64 MHz max.)

Remark 3. f_{IH}: High-speed on-chip oscillator clock frequency (32 MHz max.)

Remark 4. f_{SUB}: Subsystem clock frequency (XT1 clock oscillation frequency)

Remark 5. Except subsystem clock operation and STOP mode, temperature condition of the TYP. value is T_A = 25°C

(T_A = -40 to +105°C, 2.4 V ≤ EV_{DD0} ≤ V_{DD} ≤ 5.5 V, V_{SS} = EV_{SS0} = 0 V)

Parameter	Symbol	Conditions		MIN.	TYP.	MAX.	Unit
Low-speed on-chip oscillator operating current	I_{FIL} Note 1				0.2		μA
RTC operating current	I_{RTC} Notes 1, 2, 3				0.02		μA
12-bit interval timer operating current	I_{IT} Notes 1, 2, 4				0.02		μA
Watchdog timer operating current	I_{WDT} Notes 1, 2, 5	f_{IL} = 15 kHz			0.22		μA
A/D converter operating current	I_{ADC} Notes 1, 6	When conversion at maximum speed	Normal mode, AV_{REFP} = V_{DD} = 5.0 V		1.3	1.7	mA
			Low voltage mode, AV_{REFP} = V_{DD} = 3.0 V		0.5	0.7	mA
A/D converter reference voltage current	I_{ADREF} Note 1				75		μA
Temperature sensor operating current	I_{TMPS} Note 1				75		μA
D/A converter operating current	I_{DAC} Notes 1, 11	Per D/A converter channel				1.5	mA
PGA operating current		Operation			480	700	μA
Comparator operating current	I_{CMP} Notes 1, 12	Operation (per comparator channel, constant current for comparator included)	When the internal reference voltage is not in use		50	100	μA
			When the internal reference voltage is in use		60	110	μA
LVD operating current	I_{LVD} Notes 1, 7				0.08		μA
Self-programming operating current	I_{FSP} Notes 1, 9				2.50	12.2	mA
BGO operating current	I_{BGO} Notes 1, 8				2.50	12.2	mA
SNOOZE operating current	I_{SNOZ} Note 1	ADC operation	The mode is performed Note 10		0.50	1.10	mA
			The A/D conversion operations are performed, Low voltage mode, AV_{REFP} = V_{DD} = 3.0 V		1.20	2.04	
		Simplified SPI (CSI)/UART operation			0.70	1.54	
		DTC operation			3.10		

Note 1. Current flowing to V_{DD}.

Note 2. When high speed on-chip oscillator and high-speed system clock are stopped.

Note 3. Current flowing only to the real-time clock (RTC) (excluding the operating current of the low-speed on-chip oscillator and the XT1 oscillator). The supply current of the RL78 microcontrollers is the sum of the values of either I_{DD1} or I_{DD2}, and I_{RTC}, when the real-time clock operates in operation mode or HALT mode. When the low-speed on-chip oscillator is selected, I_{FIL} should be added. I_{DD2} subsystem clock operation includes the operational current of the real-time clock.

Note 4. Current flowing only to the 12-bit interval timer (excluding the operating current of the low-speed on-chip oscillator and the XT1 oscillator). The supply current of the RL78 microcontrollers is the sum of the values of either I_{DD1} or I_{DD2}, and I_{IT}, when the 12-bit interval timer operates in operation mode or HALT mode. When the low-speed on-chip oscillator is selected, I_{FIL} should be added.

Note 5. Current flowing only to the watchdog timer (including the operating current of the low-speed on-chip oscillator).
The supply current of the RL78 microcontrollers is the sum of I_{DD1}, I_{DD2} or I_{DD3} and I_{WDT} when the watchdog timer is in operation.

Note 6. Current flowing only to the A/D converter. The supply current of the RL78 microcontrollers is the sum of I_{DD1} or I_{DD2} and I_{ADC} when the A/D converter operates in an operation mode or the HALT mode.

Note 7. Current flowing only to the LVD circuit. The supply current of the RL78 microcontrollers is the sum of I_{DD1}, I_{DD2} or I_{DD3} and I_{LVD} when the LVD circuit is in operation.

Note 8. Current flowing during programming of the data flash.

Note 9. Current flowing during self-programming.

Note 10. For shift time to the SNOOZE mode, see **26.3.3 SNOOZE mode**.

Note 11. Current flowing only to the D/A converter. The supply current of the RL78 microcontrollers is the sum of I_{DD1} or I_{DD2} and I_{DAC} when the D/A converter operates in an operation mode or the HALT mode.

Note 12. Current flowing only to the comparator circuit. The supply current of the RL78 microcontrollers is the sum of I_{DD1}, I_{DD2}, or I_{DD3} and I_{CMP} when the comparator circuit is in operation.

Remark 1. f_{IL}: Low-speed on-chip oscillator clock frequency

Remark 2. f_{SUB}: Subsystem clock frequency (XT1 clock oscillation frequency)

Remark 3. f_{CLK}: CPU/peripheral hardware clock frequency

Remark 4. Temperature condition of the TYP. value is T_A = 25°C

38.4 AC Characteristics

(T_A = -40 to +105°C, 2.4 V ≤ EV_{DD0} ≤ V_{DD} ≤ 5.5 V, V_{SS} = EV_{SS0} = 0 V) **(1/2)**

Items	Symbol	Conditions			MIN.	TYP.	MAX.	Unit
Instruction cycle (minimum instruction execution time)	T_{CY}	Main system clock (f_{MAIN}) operation	HS (high-speed main) mode	2.7 V ≤ V_{DD} ≤ 5.5 V	0.03125		1	μs
				2.4 V ≤ V_{DD} < 2.7 V	0.0625		1	μs
		Subsystem clock (f_{SUB}) operation		2.4 V ≤ V_{DD} ≤ 5.5 V	28.5	30.5	31.3	μs
		In the self-programming mode	HS (high-speed main) mode	2.7 V ≤ V_{DD} ≤ 5.5 V	0.03125		1	μs
				2.4 V ≤ V_{DD} < 2.7 V	0.0625		1	μs
External system clock frequency	f_{EX}	2.7 V ≤ V_{DD} ≤ 5.5 V			1.0		20.0	MHz
		2.4 V ≤ V_{DD} ≤ 2.7 V			1.0		16.0	MHz
	f_{EXS}				32		35	kHz
External system clock input high-level width, low-level width	t_{EXH}, t_{EXL}	2.7 V ≤ V_{DD} ≤ 5.5 V			24			ns
		2.4 V ≤ V_{DD} ≤ 2.7 V			30			ns
	t_{EXHS}, t_{EXLS}				13.7			μs
TI00 to TI03 input high-level width, low-level width	t_{TIH}, t_{TIL}				1/f_{MCK} + 10 Note			ns
Timer RJ input cycle	f_C	TRJIO		2.7 V ≤ EV_{DD0} ≤ 5.5 V	100			ns
				2.4 V ≤ EV_{DD0} < 2.7 V	300			ns
Timer RJ input high-level width, low-level width	t_{TJIH}, t_{TJIL}	TRJIO		2.7 V ≤ EV_{DD0} ≤ 5.5 V	40			ns
				2.4 V ≤ EV_{DD0} < 2.7 V	120			ns

Note The following conditions are required for low voltage interface when EV_{DD0} < V_{DD}
2.4 V ≤ EV_{DD0} < 2.7 V: MIN. 125 ns

Remark f_{MCK}: Timer array unit operation clock frequency
(Operation clock to be set by the CKSmn bit of timer mode register mn (TMRmn). m: Unit number (m = 0, 1), n: Channel number (n = 0 to 3))

(T_A = -40 to +105°C, 2.4 V ≤ EV_{DD0} ≤ V_{DD} ≤ 5.5 V, V_{SS} = EV_{SS0} = 0 V) **(2/2)**

Items	Symbol	Conditions		MIN.	TYP.	MAX.	Unit
Timer RD input high-level width, low-level width	t_{TDIH}, t_{TDIL}	TRDIOA0, TRDIOA1, TRDIOB0, TRDIOB1, TRDIOC0, TRDIOC1, TRDIOD0, TRDIOD1		3/f_{CLK}			ns
Timer RD forced cutoff signal input low-level width	t_{TDSIL}	P130/INTP0	2MHz < f_{CLK} ≤ 32 MHz	1			μs
			f_{CLK} ≤ 2 MHz	1/f_{CLK} + 1			
Timer RG input high-level width, low-level width	t_{TGIH}, t_{TGIL}	TRGIOA, TRGIOB		2.5/f_{CLK}			ns
TO00 to TO03, TRJIO0, TRJO0, TRDIOA0, TRDIOA1, TRDIOB0, TRDIOB1, TRDIOC0, TRDIOC1, TRDIOD0, TRDIOD1, TRGIOA, TRGIOB output frequency	f_{TO}	HS (high-speed main) mode	4.0 V ≤ EV_{DD0} ≤ 5.5 V			16	MHz
			2.7 V ≤ EV_{DD0} < 4.0 V			8	MHz
			2.4 V ≤ EV_{DD0} < 2.7 V			4	MHz
PCLBUZ0, PCLBUZ1 output frequency	f_{PCL}	HS (high-speed main) mode	4.0 V ≤ EV_{DD0} ≤ 5.5 V			16	MHz
			2.7 V ≤ EV_{DD0} < 4.0 V			8	MHz
			2.4 V ≤ EV_{DD0} < 2.7 V			4	MHz
Interrupt input high-level width, low-level width	t_{INTH}, t_{INTL}	INTP0	2.4 V ≤ V_{DD} ≤ 5.5 V	1			μs
		INTP1 to INTP11	2.4 V ≤ EV_{DD0} ≤ 5.5 V	1			μs
Key interrupt input low-level width	t_{KR}	KR0 to KR7	2.4 V ≤ EV_{DD0} ≤ 5.5 V	250			ns
$\overline{\text{RESET}}$ low-level width	t_{RSL}			10			μs

Minimum Instruction Execution Time during Main System Clock Operation

TCY vs VDD (HS (high-speed main) mode)

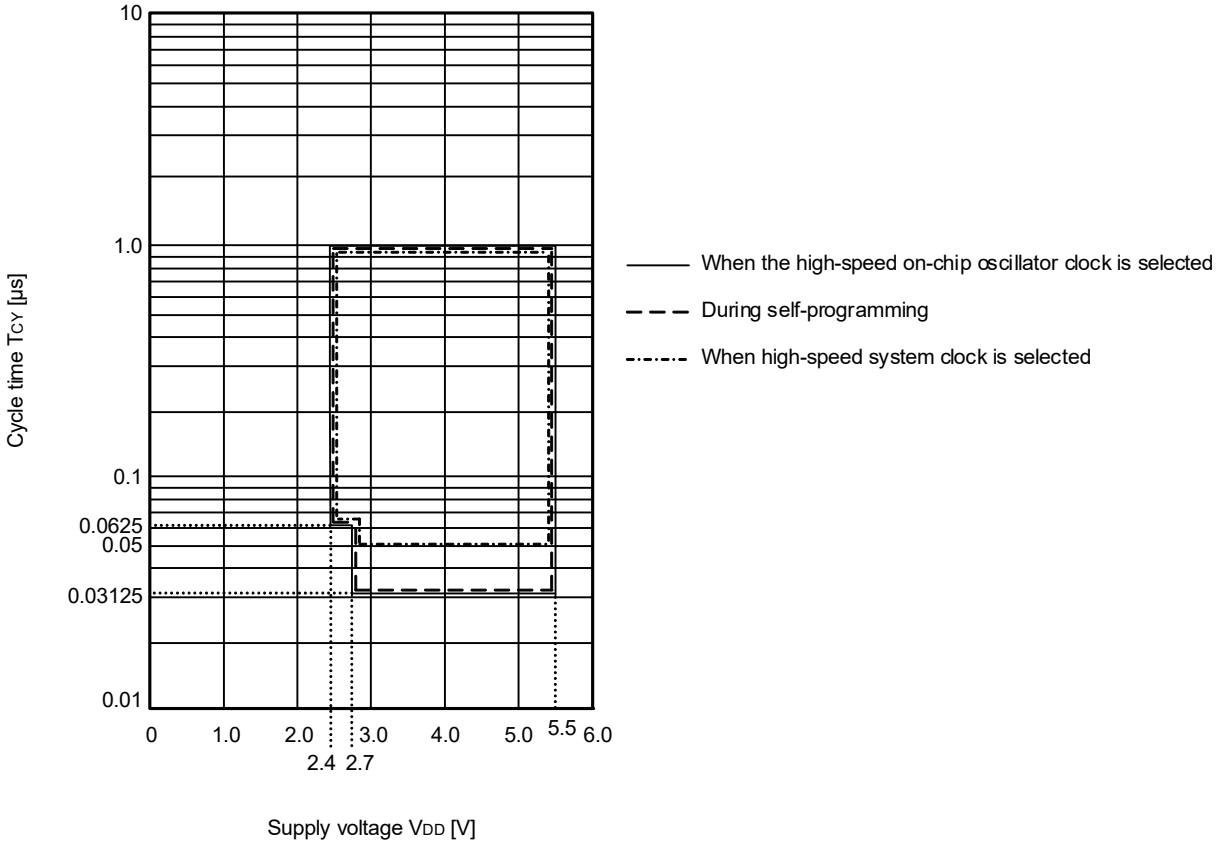

AC Timing Test Points

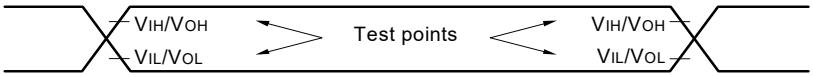

External System Clock Timing

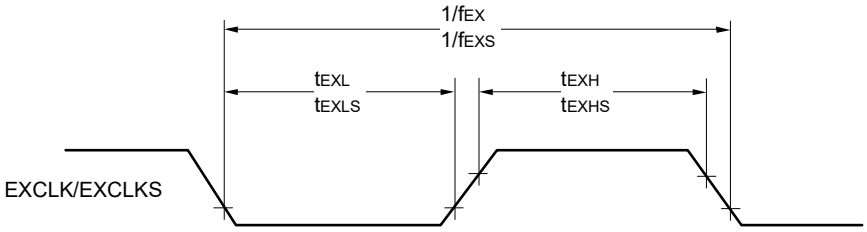

TI/TO Timing

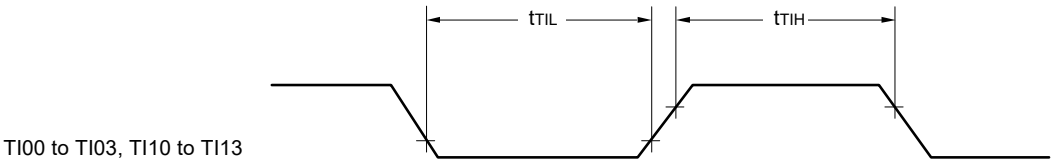

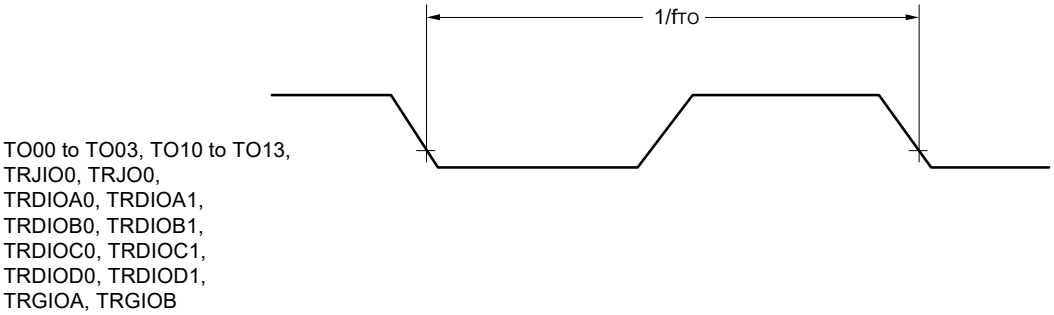

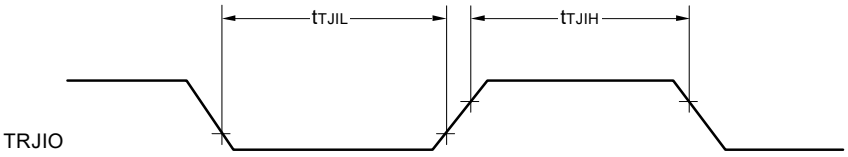
tTJIL
tTJIH
TRJIO

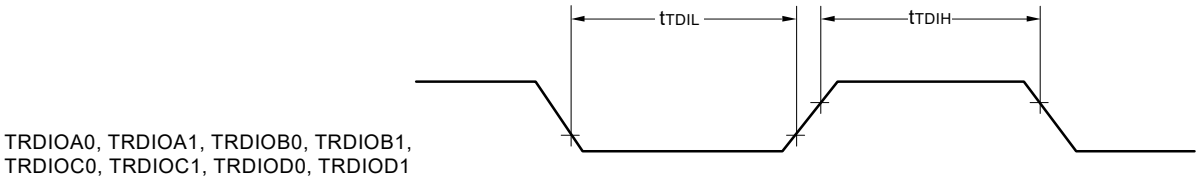
tTDIL
tTDIH
TRDIOA0, TRDIOA1, TRDIOB0, TRDIOB1,
TRDIOC0, TRDIOC1, TRDIOD0, TRDIOD1

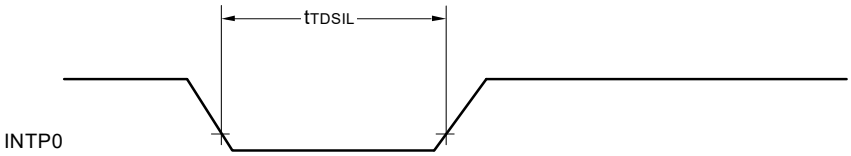
tTDSIL
INTP0

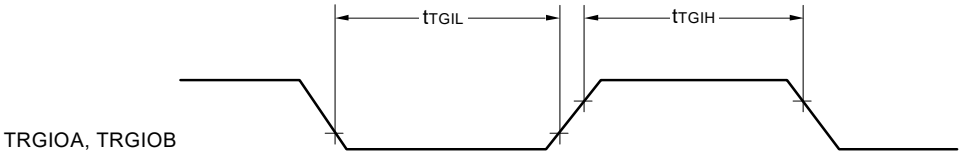
tTGIL
tTGIH
TRGIOA, TRGIOB

Interrupt Request Input Timing

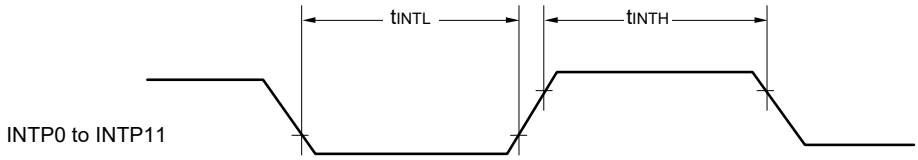

Key Interrupt Input Timing

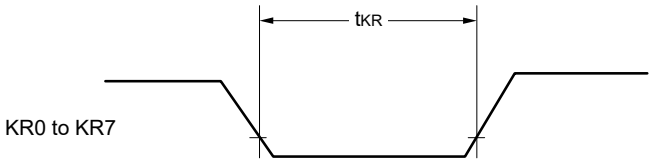

$\overline{\text{RESET}}$ Input Timing

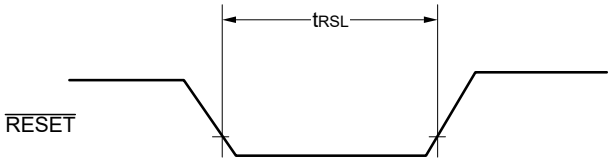

38.5 Peripheral Functions Characteristics

AC Timing Test Points

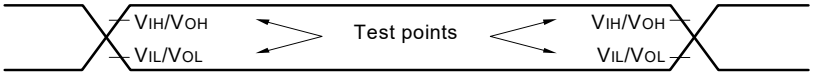

38.5.1 Serial array unit

(1) During communication at same potential (UART mode)

(T_A = -40 to +105°C, 2.4 V ≤ EV_{DD0} ≤ 5.5 V, V_{SS} = EV_{SS0} = 0 V)

Parameter	Symbol	Conditions	HS (high-speed main) Mode		Unit
			MIN.	MAX.	
Transfer rate Note 1		2.4 V ≤ EV_{DD0} ≤ 5.5 V		f_{MCK}/12 Note 2	bps
		Theoretical value of the maximum transfer rate f_{MCK} = f_{CLK} Note 3		2.6	Mbps

Note 1. Transfer rate in the SNOOZE mode is 4800 bps only.
However, the SNOOZE mode cannot be used when FRQSEL4 = 1.

Note 2. The following conditions are required for low voltage interface when EV_{DD0} < V_{DD}.
2.4 V ≤ EV_{DD0} < 2.7 V: MAX.1.3 Mbps

Note 3. The maximum operating frequencies of the CPU/peripheral hardware clock (f_{CLK}) are:
HS (high-speed main) mode: 32 MHz (2.7 V ≤ V_{DD} ≤ 5.5 V)
16 MHz (2.4 V ≤ V_{DD} ≤ 5.5 V)

Caution Select the normal input buffer for the RxDq pin and the normal output mode for the TxDq pin by using port input mode register g (PIMg) and port output mode register g (POMg).

UART mode connection diagram (during communication at same potential)

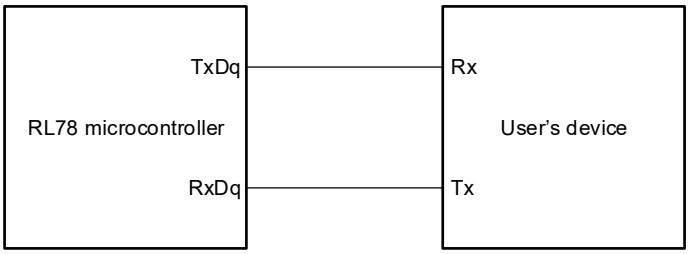

UART mode bit width (during communication at same potential) (reference)

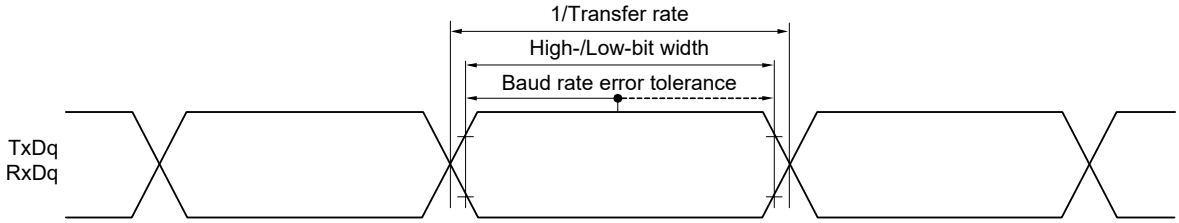

Remark 1. q: UART number (q = 0 to 2), g: PIM and POM number (g = 0, 1, 3, 5, 7)

Remark 2. f_{MCK}: Serial array unit operation clock frequency
(Operation clock to be set by the CKSmn bit of serial mode register mn (SMRmn). m: Unit number, n: Channel number (mn = 00 to 03, 10, 11))

(2) During communication at same potential (Simplified SPI (CSI) mode) (master mode, SCKp... internal clock output)

(T_A = -40 to +105°C, 2.4 V ≤ EV_{DD0} ≤ V_{DD} ≤ 5.5 V, V_{SS} = EV_{SS0} = 0 V)

Parameter	Symbol	Conditions		HS (high-speed main) mode		Unit
				MIN.	MAX.	
SCKp cycle time	t_{KCY1}	t_{KCY1} ≥ 2/f_{CLK}	2.7 V ≤ EV_{DD0} ≤ 5.5 V	250		ns
			2.4 V ≤ EV_{DD0} ≤ 5.5 V	500		ns
SCKp high-/low-level width	t_{KH1}, t_{KL1}	4.0 V ≤ EV_{DD0} ≤ 5.5 V		t_{KCY1}/2 - 24		ns
		2.7 V ≤ EV_{DD0} ≤ 5.5 V		t_{KCY1}/2 - 36		ns
		2.4 V ≤ EV_{DD0} ≤ 5.5 V		t_{KCY1}/2 - 76		
SIp setup time (to SCKp↑) Note 1	t_{SIK1}	4.0 V ≤ EV_{DD0} ≤ 5.5 V		66		ns
		2.7 V ≤ EV_{DD0} ≤ 5.5 V		66		ns
		2.4 V ≤ EV_{DD0} ≤ 5.5 V		113		
SIp hold time (from SCKp↑) Note 2	t_{KSI1}	2.7 V ≤ EV_{DD0} ≤ 5.5 V		38		ns
Delay time from SCKp↓ to SOp output Note 3	t_{KSO1}	C = 20 pF Note 4			50	ns

Note 1. When DAPmn = 0 and CKPmn = 0, or DAPmn = 1 and CKPmn = 1. The SIp setup time becomes "to SCKp↓" when DAPmn = 0 and CKPmn = 1, or DAPmn = 1 and CKPmn = 0.

Note 2. When DAPmn = 0 and CKPmn = 0, or DAPmn = 1 and CKPmn = 1. The SIp hold time becomes "from SCKp↓" when DAPmn = 0 and CKPmn = 1, or DAPmn = 1 and CKPmn = 0.

Note 3. When DAPmn = 0 and CKPmn = 0, or DAPmn = 1 and CKPmn = 1. The delay time to SOp output becomes "from SCKp↑" when DAPmn = 0 and CKPmn = 1, or DAPmn = 1 and CKPmn = 0.

Note 4. C is the load capacitance of the SCKp and SOp output lines.

Caution **Select the normal input buffer for the SIp pin and the normal output mode for the SOp pin and SCKp pin by using port input mode register g (PIMg) and port output mode register g (POMg).**

Remark 1. p: CSI number (p = 00, 01, 10, 11, 20, 21), m: Unit number (m = 0, 1), n: Channel number (n = 0 to 3), g: PIM number (g = 0, 1, 3 , 5, 7)

Remark 2. f_{MCK}: Serial array unit operation clock frequency
(Operation clock to be set by the CKSmn bit of serial mode register mn (SMRmn). m: Unit number, n: Channel number (mn = 00 to 03, 10, 11))

(3) During communication at same potential (Simplified SPI (CSI) mode) (slave mode, SCKp... external clock input)

(T_A = -40 to +105°C, 2.4 V ≤ EV_{DD0} ≤ V_{DD} ≤ 5.5 V, V_{SS} = EV_{SS0} = 0 V) **(1/2)**

Parameter	Symbol	Conditions		HS (high-speed main) mode		Unit
				MIN.	MAX.	
SCKp cycle time Note 5	t_{KCY2}	4.0 V ≤ EV_{DD0} ≤ 5.5 V	20 MHz < f_{MCK}	16/f_{MCK}		ns
			f_{MCK} ≤ 20 MHz	12/f_{MCK}		ns
		2.7 V ≤ EV_{DD0} ≤ 5.5 V	16 MHz < f_{MCK}	16/f_{MCK}		ns
			f_{MCK} ≤ 16 MHz	12/f_{MCK}		ns
		2.4 V ≤ EV_{DD0} ≤ 5.5 V		12/f_{MCK} and 1000		ns
SCKp high-/ low-level width	t_{KH2}, t_{KL2}	4.0 V ≤ EV_{DD0} ≤ 5.5 V		t_{KCY2}/2 - 14		ns
		2.7 V ≤ EV_{DD0} ≤ 5.5 V		t_{KCY2}/2 - 16		ns
		2.4 V ≤ EV_{DD0} ≤ 5.5 V		1/f_{MCK} + 36		ns
SIp setup time (to SCKp↑) Note 1	t_{SIK2}	2.7 V ≤ EV_{DD0} ≤ 5.5 V		1/f_{MCK} + 40		ns
		2.4 V ≤ EV_{DD0} ≤ 5.5 V		1/f_{MCK} + 60		ns
SIp hold time (from SCKp↑) Note 2	t_{KSI2}			1/f_{MCK} + 62		ns
Delay time from SCKp↓ to SOp output Note 3	t_{KSO2}	C = 30 pF Note 4	2.7 V ≤ EV_{DD0} ≤ 5.5 V		2/f_{MCK} + 66	ns
			2.4 V ≤ EV_{DD0} ≤ 5.5 V		2/f_{MCK} + 113	ns

Note 1. When DAPmn = 0 and CKPmn = 0, or DAPmn = 1 and CKPmn = 1. The SIp setup time becomes "to SCKp↓" when DAPmn = 0 and CKPmn = 1, or DAPmn = 1 and CKPmn = 0.

Note 2. When DAPmn = 0 and CKPmn = 0, or DAPmn = 1 and CKPmn = 1. The SIp hold time becomes "from SCKp↓" when DAPmn = 0 and CKPmn = 1, or DAPmn = 1 and CKPmn = 0.

Note 3. When DAPmn = 0 and CKPmn = 0, or DAPmn = 1 and CKPmn = 1. The delay time to SOp output becomes "from SCKp↑" when DAPmn = 0 and CKPmn = 1, or DAPmn = 1 and CKPmn = 0.

Note 4. C is the load capacitance of the SOp output lines.

Note 5. The maximum transfer rate when using the SNOOZE mode is 1 Mbps.

Caution **Select the normal input buffer for the SIp pin and SCKp pin and the normal output mode for the SOp pin by using port input mode register g (PIMg) and port output mode register g (POMg).**

Remark 1. p: CSI number (p = 00, 01, 10, 11, 20, 21), m: Unit number (m = 0, 1),
n: Channel number (n = 0 to 3), g: PIM number (g = 0, 1, 3, 5, 7)

Remark 2. f_{MCK}: Serial array unit operation clock frequency
(Operation clock to be set by the CKSmn bit of serial mode register mn (SMRmn). m: Unit number,
n: Channel number (mn = 00 to 03, 10, 11))

(3) During communication at same potential (Simplified SPI (CSI) mode) (slave mode, SCKp... external clock input)

(T_A = -40 to +105°C, 2.4 V ≤ EV_{DD0} ≤ V_{DD} ≤ 5.5 V, V_{SS} = EV_{SS0} = 0 V) **(2/2)**

Parameter	Symbol	Conditions		HS (high-speed main) mode		Unit
				MIN.	MAX.	
$\overline{SSI00}$ setup time	t_{SSIK}	DAPmn = 0	2.7 V ≤ EV_{DD0} ≤ 5.5 V	240		ns
			2.4 V ≤ EV_{DD0} ≤ 5.5 V	400		ns
		DAPmn = 1	2.7 V ≤ EV_{DD0} ≤ 5.5 V	1/f_{MCK} + 240		ns
			2.4 V ≤ EV_{DD0} ≤ 5.5 V	1/f_{MCK} + 400		ns
$\overline{SSI00}$ hold time	t_{KSSI}	DAPmn = 0	2.7 V ≤ EV_{DD0} ≤ 5.5 V	1/f_{MCK} + 240		ns
			2.4 V ≤ EV_{DD0} ≤ 5.5 V	1/f_{MCK} + 400		ns
		DAPmn = 1	2.7 V ≤ EV_{DD0} ≤ 5.5 V	240		ns
			2.4 V ≤ EV_{DD0} ≤ 5.5 V	400		ns

Caution **Select the normal input buffer for the SIp pin and SCKp pin and the normal output mode for the SOp pin by using port input mode register g (PIMg) and port output mode register g (POMg).**

Remark p: CSI number (p = 00), m: Unit number (m = 0), n: Channel number (n = 0), g: PIM number (g = 3, 5)

Simplified SPI (CSI) mode connection diagram (during communication at same potential)

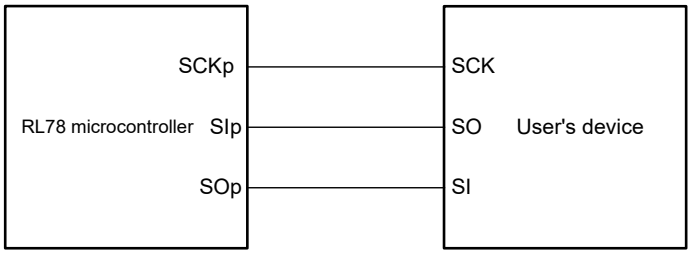

Simplified SPI (CSI) mode connection diagram (during communication at same potential)
(Slave Transmission of slave select input function (CSI00))

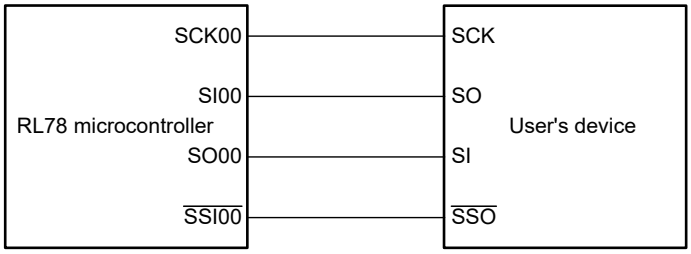

Remark 1. p: CSI number (p = 00, 01, 10, 11, 20, 21)
Remark 2. m: Unit number, n: Channel number (mn = 00 to 03, 10, 11)

Simplified SPI (CSI) mode serial transfer timing (during communication at same potential)
(When DAPmn = 0 and CKPmn = 0, or DAPmn = 1 and CKPmn = 1.)

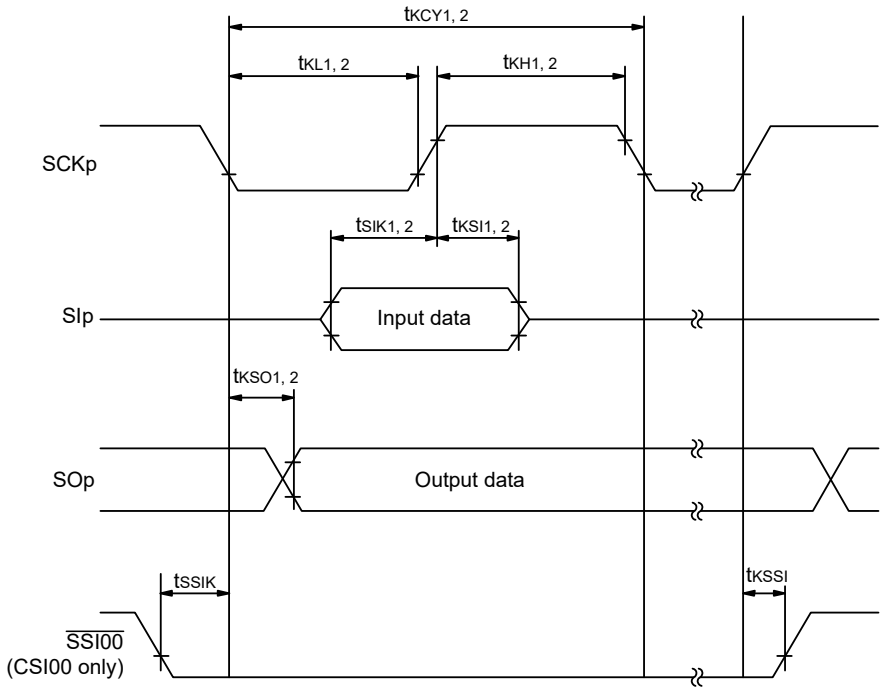

Simplified SPI (CSI) mode serial transfer timing (during communication at same potential)
(When DAPmn = 0 and CKPmn = 1, or DAPmn = 1 and CKPmn = 0.)

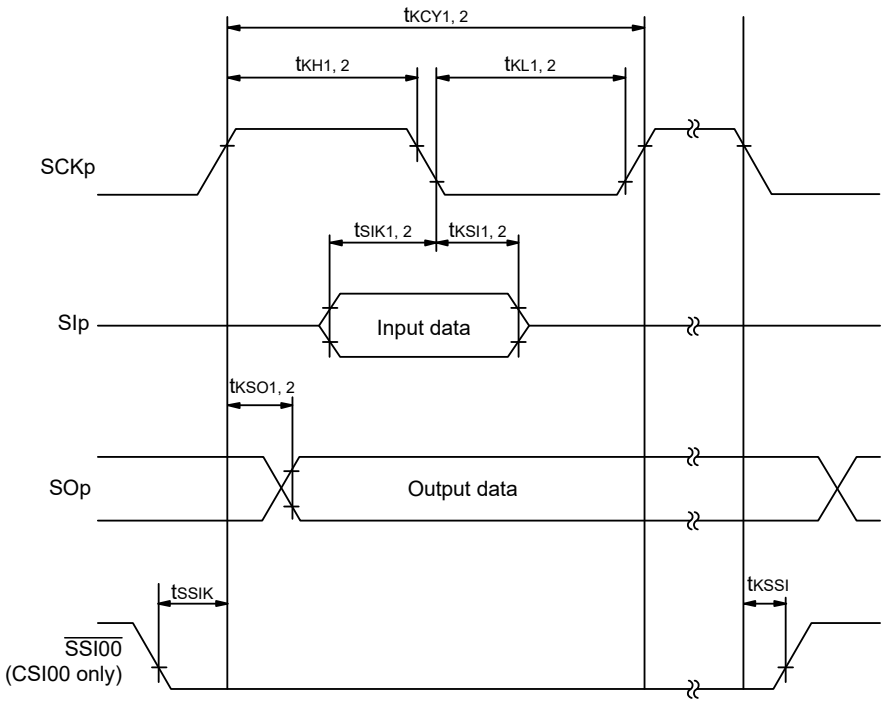

Remark 1. p: CSI number (p = 00, 01, 10, 11, 20, 21)
Remark 2. m: Unit number, n: Channel number (mn = 00 to 03, 10, 11)

(4) During communication at same potential (simplified I²C mode)

(T_A = -40 to +105°C, 2.4 V ≤ EV_{DD0} ≤ V_{DD} ≤ 5.5 V, V_{SS} = EV_{SS0} = 0 V)

Parameter	Symbol	Conditions	HS (high-speed main) mode		Unit
			MIN.	MAX.	
SCLr clock frequency	f_{SCL}	2.7 V ≤ EV_{DD0} ≤ 5.5 V, C_b = 50 pF, R_b = 2.7 kΩ		400 Note 1	kHz
		2.4 V ≤ EV_{DD0} ≤ 5.5 V, C_b = 100 pF, R_b = 3 kΩ		100 Note 1	kHz
Hold time when SCLr = "L"	t_{LOW}	2.7 V ≤ EV_{DD0} ≤ 5.5 V, C_b = 50 pF, R_b = 2.7 kΩ	1200		ns
		2.4 V ≤ EV_{DD0} ≤ 5.5 V, C_b = 100 pF, R_b = 3 kΩ	4600		ns
Hold time when SCLr = "H"	t_{HIGH}	2.7 V ≤ EV_{DD0} ≤ 5.5 V, C_b = 50 pF, R_b = 2.7 kΩ	1200		ns
		2.4 V ≤ EV_{DD0} ≤ 5.5 V, C_b = 100 pF, R_b = 3 kΩ	4600		ns
Data setup time (reception)	$t_{SU: DAT}$	2.7 V ≤ EV_{DD0} ≤ 5.5 V, C_b = 50 pF, R_b = 2.7 kΩ	1/f_{MCK} + 220 Note 2		ns
		2.4 V ≤ EV_{DD0} ≤ 5.5 V, C_b = 100 pF, R_b = 3 kΩ	1/f_{MCK} + 580 Note 2		ns
Data hold time (transmission)	$t_{HD: DAT}$	2.7 V ≤ EV_{DD0} ≤ 5.5 V, C_b = 50 pF, R_b = 2.7 kΩ	0	770	ns
		2.4 V ≤ EV_{DD0} ≤ 5.5 V, C_b = 100 pF, R_b = 3 kΩ	0	1420	ns

Note 1. The value must also be equal to or less than f_{MCK}/4.

Note 2. Set the f_{MCK} value to keep the hold time of SCLr = "L" and SCLr = "H".

Caution Select the normal input buffer and the N-ch open drain output (V_{DD} tolerance (for the 48-, 32-, 24-pin products)/EV_{DD} tolerance (for the 64-, 36-pin products)) mode for the SDAr pin and the normal output mode for the SCLr pin by using port input mode register g (PIMg) and port output mode register h (POMh).

(**Remarks** are listed on the next page.)

Simplified I²C mode connection diagram (during communication at same potential)

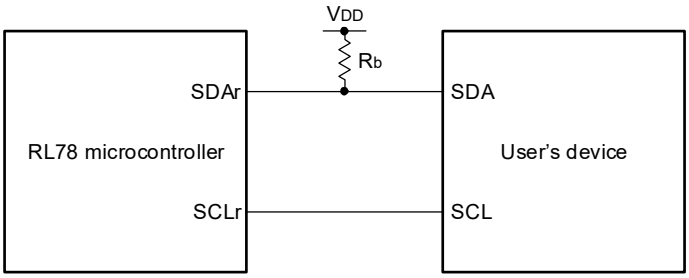

Simplified I²C mode serial transfer timing (during communication at same potential)

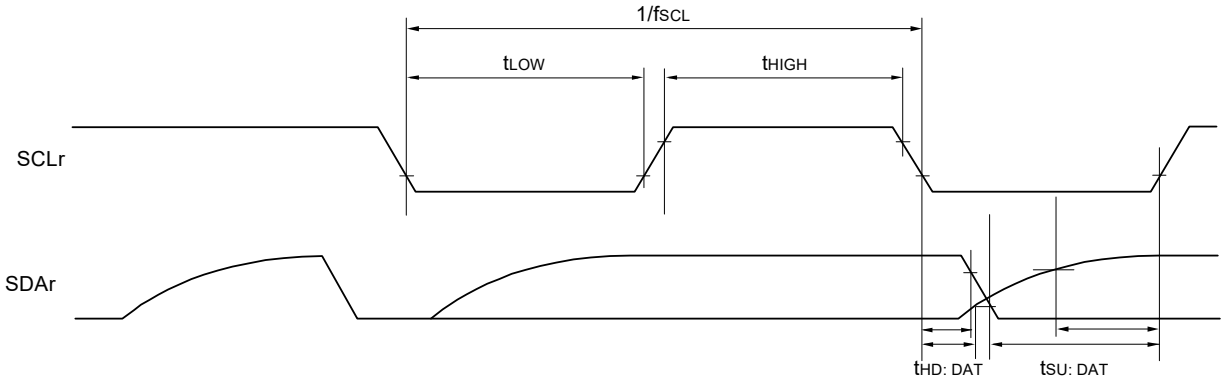

Remark 1. R_b[Ω]: Communication line (SDAr) pull-up resistance, C_b[F]: Communication line (SDAr, SCLr) load capacitance

Remark 2. r: IIC number (r = 00, 01, 10, 11, 20, 21), g: PIM number (g = 0, 1, 3, 5, 7),
h: POM number (h = 0, 1, 3, 5, 7)

Remark 3. f_{MCK}: Serial array unit operation clock frequency
(Operation clock to be set by the CKSmn bit of serial mode register mn (SMRmn). m: Unit number (m = 0, 1),
n: Channel number (n = 0 to 3), mn = 00 to 03, 10, 11)

(5) Communication at different potential (1.8 V, 2.5 V, 3 V) (UART mode)

(T_A = -40 to +105°C, 2.4 V ≤ EV_{DD0} ≤ V_{DD} ≤ 5.5 V, V_{SS} = EV_{SS0} = 0 V) **(1/2)**

Parameter	Symbol	Conditions		HS (high-speed main) mode		Unit
				MIN.	MAX.	
Transfer rate		reception	4.0 V ≤ EV_{DD0} ≤ 5.5 V, 2.7 V ≤ V_b ≤ 4.0 V		f_{MCK}/12 Note 1	bps
			Theoretical value of the maximum transfer rate f_{MCK} = f_{CLK} Note 3		2.6	Mbps
			2.7 V ≤ EV_{DD0} < 4.0 V, 2.3 V ≤ V_b ≤ 2.7 V		f_{MCK}/12 Note 1	bps
			Theoretical value of the maximum transfer rate f_{MCK} = f_{CLK} Note 3		2.6	Mbps
			2.4 V ≤ EV_{DD0} < 3.3 V, 1.6 V ≤ V_b ≤ 2.0 V		f_{MCK}/12 Notes 1, 2	bps
			Theoretical value of the maximum transfer rate f_{MCK} = f_{CLK} Note 3		1.3	Mbps

Note 1. Transfer rate in the SNOOZE mode is 4800 bps only.
However, the SNOOZE mode cannot be used when FRQSEL4 = 1.

Note 2. The following conditions are required for low voltage interface when EV_{DD0} < V_{DD}.
2.4 V ≤ EV_{DD0} < 2.7 V: MAX. 2.6 Mbps
1.8 V ≤ EV_{DD0} < 2.4 V: MAX. 1.3 Mbps

Note 3. The maximum operating frequencies of the CPU/peripheral hardware clock (f_{CLK}) are:
HS (high-speed main) mode: 32 MHz (2.7 V ≤ V_{DD} ≤ 5.5 V)
16 MHz (2.4 V ≤ V_{DD} ≤ 5.5 V)

Caution **Select the TTL input buffer for the RxDq pin and the N-ch open drain output (V_{DD} tolerance (for the 48-, 32-, 24-pin products)/EV_{DD} tolerance (for the 64-, 36-pin products)) mode for the TxDq pin by using port input mode register g (PIMg) and port output mode register g (POMg). For V_{IH} and V_{IL}, see the DC characteristics with TTL input buffer selected.**

Remark 1. V_b [V]: Communication line voltage

Remark 2. q: UART number (q = 0 to 2), g: PIM and POM number (g = 0, 1, 5, 7)

Remark 3. f_{MCK}: Serial array unit operation clock frequency
(Operation clock to be set by the CKSmn bit of serial mode register mn (SMRmn). m: Unit number, n: Channel number (mn = 00 to 03, 10, 11)

Remark 4. UART2 cannot communicate at different potential when bit 1 (PIOR01) of peripheral I/O redirection register 0 (PIOR0) is 1.

(5) Communication at different potential (1.8 V, 2.5 V, 3 V) (UART mode)

(T_A = -40 to +105°C, 2.4 V ≤ EV_{DD0} ≤ V_{DD} ≤ 5.5 V, V_{SS} = EV_{SS0} = 0 V) **(2/2)**

Parameter	Symbol	Conditions		HS (high-speed main) mode		Unit
				MIN.	MAX.	
Transfer rate		transmission	4.0 V ≤ EV_{DD0} ≤ 5.5 V, 2.7 V ≤ V_b ≤ 4.0 V		Note 1	bps
			Theoretical value of the maximum transfer rate C_b = 50 pF, R_b = 1.4 kΩ, V_b = 2.7 V		2.6 Note 2	Mbps
			2.7 V ≤ EV_{DD0} < 4.0 V, 2.3 V ≤ V_b ≤ 2.7 V		Note 3	bps
			Theoretical value of the maximum transfer rate C_b = 50 pF, R_b = 2.7 kΩ, V_b = 2.3 V		1.2 Note 4	Mbps
			2.4 V ≤ EV_{DD0} < 3.3 V, 1.6 V ≤ V_b ≤ 2.0 V		Note 5	bps
			Theoretical value of the maximum transfer rate C_b = 50 pF, R_b = 5.5 kΩ, V_b = 1.6 V		0.43 Note 6	Mbps

Note 1. The smaller maximum transfer rate derived by using $f_{MCK}/6$ or the following expression is the valid maximum transfer rate.
Expression for calculating the transfer rate when 4.0 V ≤ EV_{DD0} ≤ 5.5 V and 2.7 V ≤ V_b ≤ 4.0 V

$$\text{Maximum transfer rate} = \frac{1}{\{-C_b \times R_b \times \ln(1 - \frac{2.2}{V_b})\} \times 3} \text{ [bps]}$$

$$\text{Baud rate error (theoretical value)} = \frac{\frac{1}{\text{Transfer rate} \times 2} - \{-C_b \times R_b \times \ln(1 - \frac{2.2}{V_b})\}}{(\frac{1}{\text{Transfer rate}}) \times \text{Number of transferred bits}} \times 100 \text{ [\%]}$$

* This value is the theoretical value of the relative difference between the transmission and reception sides.

Note 2. This value as an example is calculated when the conditions described in the “Conditions” column are met.
Refer to **Note 1** above to calculate the maximum transfer rate under conditions of the customer.

Note 3. The smaller maximum transfer rate derived by using $f_{MCK}/6$ or the following expression is the valid maximum transfer rate.
Expression for calculating the transfer rate when 2.7 V ≤ EV_{DD0} < 4.0 V and 2.3 V ≤ V_b ≤ 2.7 V

$$\text{Maximum transfer rate} = \frac{1}{\{-C_b \times R_b \times \ln(1 - \frac{2.0}{V_b})\} \times 3} \text{ [bps]}$$

$$\text{Baud rate error (theoretical value)} = \frac{\frac{1}{\text{Transfer rate} \times 2} - \{-C_b \times R_b \times \ln(1 - \frac{2.0}{V_b})\}}{(\frac{1}{\text{Transfer rate}}) \times \text{Number of transferred bits}} \times 100 \text{ [\%]}$$

* This value is the theoretical value of the relative difference between the transmission and reception sides.

Note 4. This value as an example is calculated when the conditions described in the “Conditions” column are met.
Refer to **Note 3** above to calculate the maximum transfer rate under conditions of the customer.

Note 5. The smaller maximum transfer rate derived by using $f_{MCK}/6$ or the following expression is the valid maximum transfer rate.
Expression for calculating the transfer rate when 2.4 V ≤ EV_{DD0} < 3.3 V and 1.6 V ≤ V_b ≤ 2.0 V

$$\text{Maximum transfer rate} = \frac{1}{\{-C_b \times R_b \times \ln(1 - \frac{1.5}{V_b})\} \times 3} \text{ [bps]}$$

$$\text{Baud rate error (theoretical value)} = \frac{\frac{1}{\text{Transfer rate} \times 2} - \{-C_b \times R_b \times \ln(1 - \frac{1.5}{V_b})\}}{(\frac{1}{\text{Transfer rate}}) \times \text{Number of transferred bits}} \times 100 \text{ [\%]}$$

* This value is the theoretical value of the relative difference between the transmission and reception sides.

Note 6. This value as an example is calculated when the conditions described in the “Conditions” column are met.
Refer to **Note 5** above to calculate the maximum transfer rate under conditions of the customer.

Caution **Select the TTL input buffer for the RxDq pin and the N-ch open drain output (V_{DD} tolerance (for the 48-, 32-, 24-pin products)/EV_{DD} tolerance (for the 64-, 36-pin products)) mode for the TxDq pin by using port input mode register g (PIMg) and port output mode register g (POMg). For V_{IH} and V_{IL}, see the DC characteristics with TTL input buffer selected.**

(**Remarks** are listed on the next page.)

UART mode connection diagram (during communication at different potential)

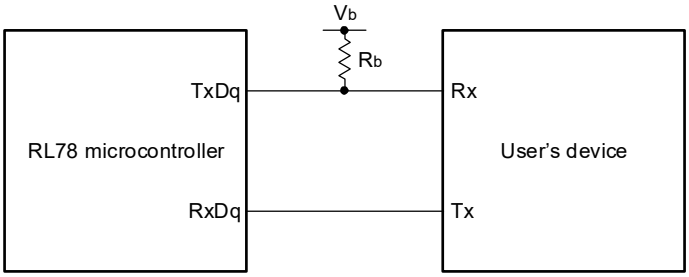

UART mode bit width (during communication at different potential) (reference)

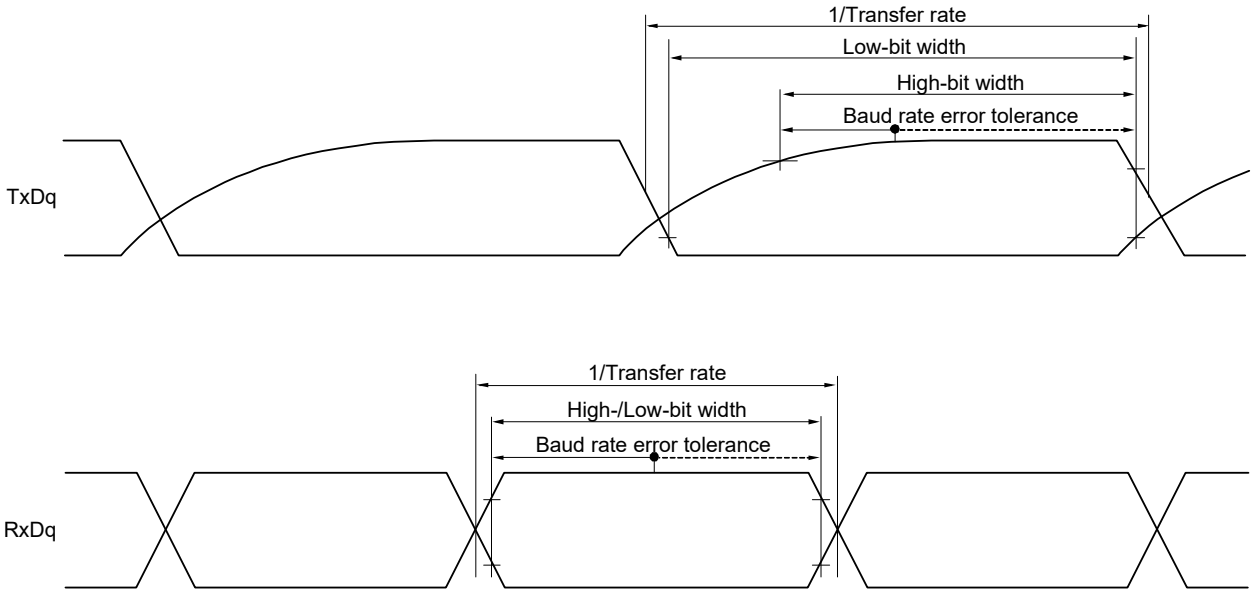

Remark 1. R_b[Ω]: Communication line (TxDq) pull-up resistance,
C_b[F]: Communication line (TxDq) load capacitance, V_b[V]: Communication line voltage

Remark 2. q: UART number (q = 0 to 2), g: PIM and POM number (g = 0, 1, 5, 7)

Remark 3. f_{MCK}: Serial array unit operation clock frequency
(Operation clock to be set by the CKSmn bit of serial mode register mn (SMRmn).
m: Unit number, n: Channel number (mn = 00 to 03, 10, 11))

Remark 4. UART2 cannot communicate at different potential when bit 1 (PIOR01) of peripheral I/O redirection register 0 (PIOR0) is 1.

(6) Communication at different potential (2.5 V, 3 V) (Simplified SPI (CSI) mode) (master mode, SCKp... internal clock output)

(T_A = -40 to +105°C, 2.4 V ≤ EV_{DD0} ≤ V_{DD} ≤ 5.5 V, V_{SS} = EV_{SS0} = 0 V) **(1/3)**

Parameter	Symbol	Conditions		HS (high-speed main) mode		Unit
				MIN.	MAX.	
SCKp cycle time	t_{KCY1}	t_{KCY1} ≥ 4/f_{CLK}	4.0 V ≤ EV_{DD0} ≤ 5.5 V, 2.7 V ≤ V_b ≤ 4.0 V, C_b = 30 pF, R_b = 1.4 kΩ	600		ns
			2.7 V ≤ EV_{DD0} < 4.0 V, 2.3 V ≤ V_b ≤ 2.7 V, C_b = 30 pF, R_b = 2.7 kΩ	1000		ns
			2.4 V ≤ EV_{DD0} < 3.3 V, 1.6 V ≤ V_b ≤ 2.0 V, C_b = 30 pF, R_b = 5.5 kΩ	2300		ns
SCKp high-level width	t_{KH1}	4.0 V ≤ EV_{DD0} ≤ 5.5 V, 2.7 V ≤ V_b ≤ 4.0 V, C_b = 30 pF, R_b = 1.4 kΩ		t_{KCY1}/2 - 150		ns
		2.7 V ≤ EV_{DD0} < 4.0 V, 2.3 V ≤ V_b ≤ 2.7 V, C_b = 30 pF, R_b = 2.7 kΩ		t_{KCY1}/2 - 340		ns
		2.4 V ≤ EV_{DD0} < 3.3 V, 1.6 V ≤ V_b ≤ 2.0 V, C_b = 30 pF, R_b = 5.5 kΩ		t_{KCY1}/2 - 916		ns
SCKp low-level width	t_{KL1}	4.0 V ≤ EV_{DD0} ≤ 5.5 V, 2.7 V ≤ V_b ≤ 4.0 V, C_b = 30 pF, R_b = 1.4 kΩ		t_{KCY1}/2 - 24		ns
		2.7 V ≤ EV_{DD0} < 4.0 V, 2.3 V ≤ V_b ≤ 2.7 V, C_b = 30 pF, R_b = 2.7 kΩ		t_{KCY1}/2 - 36		ns
		2.4 V ≤ EV_{DD0} < 3.3 V, 1.6 V ≤ V_b ≤ 2.0 V, C_b = 30 pF, R_b = 5.5 kΩ		t_{KCY1}/2 - 100		ns

Caution Select the TTL input buffer for the SIp pin and the N-ch open drain output (V_{DD} tolerance (for the 48-, 32-, 24-pin products)/EV_{DD} tolerance (for the 64-, 36-pin products)) mode for the SOp pin and SCKp pin by using port input mode register g (PIMg) and port output mode register g (POMg). For V_{IH} and V_{IL}, see the DC characteristics with TTL input buffer selected.

(**Remarks** are listed two pages after the next page.)

(6) Communication at different potential (1.8 V, 2.5 V, 3 V) (Simplified SPI (CSI) mode) (master mode, SCKp... internal clock output)

(T_A = -40 to +105°C, 1.8 V ≤ EV_{DD0} ≤ V_{DD} ≤ 5.5 V, V_{SS} = EV_{SS0} = 0 V) **(2/3)**

Parameter	Symbol	Conditions	HS (high-speed main) mode		Unit
			MIN.	MAX.	
SIp setup time (to SCKp↑) Note	t_{SIK1}	4.0 V ≤ EV_{DD0} ≤ 5.5 V, 2.7 V ≤ V_b ≤ 4.0 V, C_b = 30 pF, R_b = 1.4 kΩ	162		ns
		2.7 V ≤ EV_{DD0} < 4.0 V, 2.3 V ≤ V_b ≤ 2.7 V, C_b = 30 pF, R_b = 2.7 kΩ	354		ns
		2.4 V ≤ EV_{DD0} < 3.3 V, 1.6 V ≤ V_b ≤ 2.0 V, C_b = 30 pF, R_b = 5.5 kΩ	958		ns
SIp hold time (from SCKp↑) Note	t_{KSI1}	4.0 V ≤ EV_{DD0} ≤ 5.5 V, 2.7 V ≤ V_b ≤ 4.0 V, C_b = 30 pF, R_b = 1.4 kΩ	38		ns
		2.7 V ≤ EV_{DD0} < 4.0 V, 2.3 V ≤ V_b ≤ 2.7 V, C_b = 30 pF, R_b = 2.7 kΩ	38		ns
		2.4 V ≤ EV_{DD0} < 3.3 V, 1.6 V ≤ V_b ≤ 2.0 V, C_b = 30 pF, R_b = 5.5 kΩ	38		ns
Delay time from SCKp↓ to SOp output Note	t_{KSO1}	4.0 V ≤ EV_{DD0} ≤ 5.5 V, 2.7 V ≤ V_b ≤ 4.0 V, C_b = 30 pF, R_b = 1.4 kΩ		200	ns
		2.7 V ≤ EV_{DD0} < 4.0 V, 2.3 V ≤ V_b ≤ 2.7 V, C_b = 30 pF, R_b = 2.7 kΩ		390	ns
		2.4 V ≤ EV_{DD0} < 3.3 V, 1.6 V ≤ V_b ≤ 2.0 V, C_b = 30 pF, R_b = 5.5 kΩ		966	ns

Note When DAPmn = 0 and CKPmn = 0, or DAPmn = 1 and CKPmn = 1.

Caution **Select the TTL input buffer for the SIp pin and the N-ch open drain output (V_{DD} tolerance (for the 48-, 32-, 24-pin products)/EV_{DD} tolerance (for the 64-, 36-pin products)) mode for the SOp pin and SCKp pin by using port input mode register g (PIMg) and port output mode register g (POMg). For V_{IH} and V_{IL}, see the DC characteristics with TTL input buffer selected.**

(**Remarks** are listed on the page after the next page.)

(6) Communication at different potential (1.8 V, 2.5 V, 3 V) (Simplified SPI (CSI) mode) (master mode, SCKp... internal clock output)

(T_A = -40 to +105°C, 1.8 V ≤ EV_{DD0} ≤ V_{DD} ≤ 5.5 V, V_{SS} = EV_{SS0} = 0 V) **(3/3)**

Parameter	Symbol	Conditions	HS (high-speed main) mode		Unit
			MIN.	MAX.	
SIp setup time (to SCKp↓) Note	t_{SIK1}	4.0 V ≤ EV_{DD0} ≤ 5.5 V, 2.7 V ≤ V_b ≤ 4.0 V, C_b = 30 pF, R_b = 1.4 kΩ	88		ns
		2.7 V ≤ EV_{DD0} < 4.0 V, 2.3 V ≤ V_b ≤ 2.7 V, C_b = 30 pF, R_b = 2.7 kΩ	88		ns
		2.4 V ≤ EV_{DD0} < 3.3 V, 1.6 V ≤ V_b ≤ 2.0 V, C_b = 30 pF, R_b = 5.5 kΩ	220		ns
SIp hold time (from SCKp↓) Note	t_{KSI1}	4.0 V ≤ EV_{DD0} ≤ 5.5 V, 2.7 V ≤ V_b ≤ 4.0 V, C_b = 30 pF, R_b = 1.4 kΩ	38		ns
		2.7 V ≤ EV_{DD0} < 4.0 V, 2.3 V ≤ V_b ≤ 2.7 V, C_b = 30 pF, R_b = 2.7 kΩ	38		ns
		2.4 V ≤ EV_{DD0} < 3.3 V, 1.6 V ≤ V_b ≤ 2.0 V, C_b = 30 pF, R_b = 5.5 kΩ	38		ns
Delay time from SCKp↑ to SOp output Note	t_{KSO1}	4.0 V ≤ EV_{DD0} ≤ 5.5 V, 2.7 V ≤ V_b ≤ 4.0 V, C_b = 30 pF, R_b = 1.4 kΩ		50	ns
		2.7 V ≤ EV_{DD0} < 4.0 V, 2.3 V ≤ V_b ≤ 2.7 V, C_b = 30 pF, R_b = 2.7 kΩ		50	ns
		2.4 V ≤ EV_{DD0} < 3.3 V, 1.6 V ≤ V_b ≤ 2.0 V, C_b = 30 pF, R_b = 5.5 kΩ		50	ns

Note When DAPmn = 0 and CKPmn = 1, or DAPmn = 1 and CKPmn = 0.

Caution **Select the TTL input buffer for the SIp pin and the N-ch open drain output (V_{DD} tolerance (for the 48-, 32-, 24-pin products)/EV_{DD} tolerance (for the 64-, 36-pin products)) mode for the SOp pin and SCKp pin by using port input mode register g (PIMg) and port output mode register g (POMg). For V_{IH} and V_{IL}, see the DC characteristics with TTL input buffer selected.**

(**Remarks** are listed on the next page.)

Simplified SPI (CSI) mode connection diagram (during communication at different potential

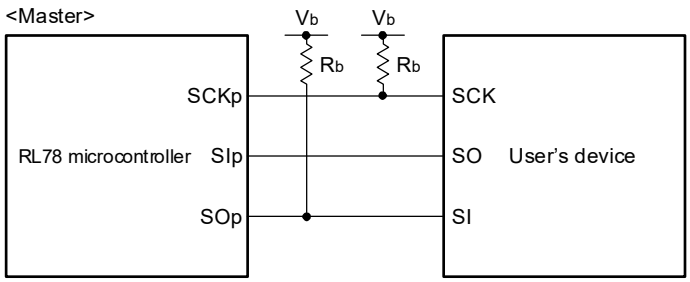

Remark 1. R_b[Ω]: Communication line (SCKp, SOp) pull-up resistance, C_b[F]: Communication line (SCKp, SOp) load capacitance, V_b[V]: Communication line voltage

Remark 2. p: CSI number (p = 00, 01, 10, 20), m: Unit number (m = 0, 1), n: Channel number (n = 0 to 3), g: PIM and POM number (g = 0, 1, 3, 5, 7)

Remark 3. f_{MCK}: Serial array unit operation clock frequency (Operation clock to be set by the CKSmn bit of serial mode register mn (SMRmn). m: Unit number, n: Channel number (mn = 00))

Remark 4. CSI01 of 48-, 64-pin products, and CSI11 and CSI21 cannot communicate at different potential. Use other CSI for communication at different potential.

Simplified SPI (CSI) mode serial transfer timing (master mode) (during communication at different potential)
(When DAPmn = 0 and CKPmn = 0, or DAPmn = 1 and CKPmn = 1.)

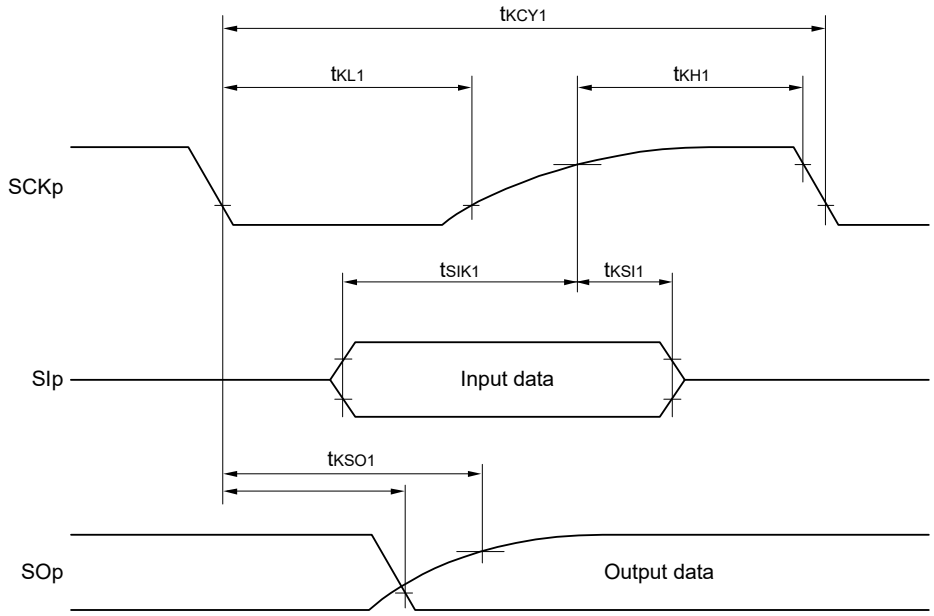

Simplified SPI (CSI) mode serial transfer timing (master mode) (during communication at different potential)
(When DAPmn = 0 and CKPmn = 1, or DAPmn = 1 and CKPmn = 0.)

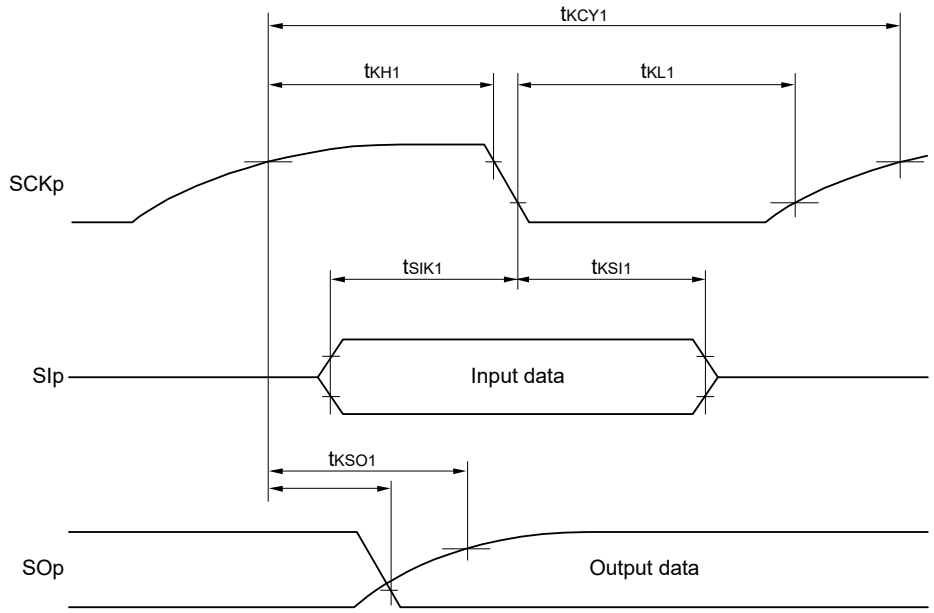

Remark 1. p: CSI number (p = 00, 01, 10, 20), m: Unit number (m = 0, 1), n: Channel number (n = 0 to 3), g: PIM and POM number (g = 0, 1, 3, 5, 7)

Remark 2. CSI01 of 48-, 64-pin products, and CSI11 and CSI21 cannot communicate at different potential. Use other CSI for communication at different potential.

Remark 3. Remark 3. fMCK: Serial array unit operation clock frequency
(Operation clock to be set by the CKSmn bit of serial mode register mn (SMRmn). m: Unit number (m = 0, 1), n: Channel number (n = 0, 2), mn = 00, 01, 02, 10)

(7) Communication at different potential (1.8 V, 2.5 V, 3 V) (Simplified SPI (CSI) mode) (slave mode, SCKp... external clock input)

(T_A = -40 to +105°C, 2.4 V ≤ EV_{DD0} ≤ V_{DD} ≤ 5.5 V, V_{SS} = EV_{SS0} = 0 V)

Parameter	Symbol	Conditions		HS (high-speed main) mode		Unit
				MIN.	MAX.	
SCKp cycle time Note 1	t_{KCY2}	4.0 V ≤ EV_{DD0} ≤ 5.5 V, 2.7 V ≤ V_b ≤ 4.0 V	24 MHz < f_{MCK}	28/f_{MCK}		ns
			20 MHz < f_{MCK} ≤ 24 MHz	24/f_{MCK}		ns
			8 MHz < f_{MCK} ≤ 20 MHz	20/f_{MCK}		ns
			4 MHz < f_{MCK} ≤ 8 MHz	16/f_{MCK}		ns
			f_{MCK} ≤ 4 MHz	12/f_{MCK}		ns
		2.7 V ≤ EV_{DD0} < 4.0 V, 2.3 V ≤ V_b ≤ 2.7 V	24 MHz < f_{MCK}	40/f_{MCK}		ns
			20 MHz < f_{MCK} ≤ 24 MHz	32/f_{MCK}		ns
			16 MHz < f_{MCK} ≤ 20 MHz	28/f_{MCK}		ns
			8 MHz < f_{MCK} ≤ 16 MHz	24/f_{MCK}		ns
			4 MHz < f_{MCK} ≤ 8 MHz	16/f_{MCK}		ns
			f_{MCK} ≤ 4 MHz	12/f_{MCK}		ns
		2.4 V ≤ EV_{DD0} < 3.3 V, 1.6 V ≤ V_b ≤ 2.0 V	24 MHz < f_{MCK}	96/f_{MCK}		ns
			20 MHz < f_{MCK} ≤ 24 MHz	72/f_{MCK}		ns
			16 MHz < f_{MCK} ≤ 20 MHz	64/f_{MCK}		ns
			8 MHz < f_{MCK} ≤ 16 MHz	52/f_{MCK}		ns
			4 MHz < f_{MCK} ≤ 8 MHz	32/f_{MCK}		ns
			f_{MCK} ≤ 4 MHz	20/f_{MCK}		ns
SCKp high-/low-level width	t_{KH2}, t_{KL2}	4.0 V ≤ EV_{DD0} ≤ 5.5 V, 2.7 V ≤ V_b ≤ 4.0 V		t_{KCY2}/2 - 24		ns
		2.7 V ≤ EV_{DD0} < 4.0 V, 2.3 V ≤ V_b ≤ 2.7 V		t_{KCY2}/2 - 36		ns
		2.4 V ≤ EV_{DD0} < 3.3 V, 1.6 V ≤ V_b ≤ 2.0 V		t_{KCY2}/2 - 100		ns
SIp setup time (to SCKp↑) Note 2	t_{SIK2}	2.7 V ≤ EV_{DD0} < 4.0 V, 2.3 V ≤ V_b ≤ 2.7 V		1/f_{MCK} + 40		ns
		2.4 V ≤ EV_{DD0} < 3.3 V, 1.6 V ≤ V_b ≤ 2.0 V		1/f_{MCK} + 60		ns
SIp hold time (from SCKp↑) Note 3	t_{KSI2}			1/f_{MCK} + 62		ns
Delay time from SCKp↓ to SOp output Note 4	t_{KSO2}	4.0 V ≤ EV_{DD0} ≤ 5.5 V, 2.7 V ≤ V_b ≤ 4.0 V, C_b = 30 pF, R_b = 1.4 kΩ			2/f_{MCK} + 240	ns
		2.7 V ≤ EV_{DD0} < 4.0 V, 2.3 V ≤ V_b ≤ 2.7 V, C_b = 30 pF, R_b = 2.7 kΩ			2/f_{MCK} + 428	ns
		2.4 V ≤ EV_{DD0} < 3.3 V, 1.6 V ≤ V_b ≤ 2.0 V, C_b = 30 pF, R_v = 5.5 kΩ			2/f_{MCK} + 1146	ns

(**Notes** and **Remarks** are listed on the next page.)

Note 1. Transfer rate in the SNOOZE mode: MAX. 1 Mbps

Note 2. When DAPmn = 0 and CKPmn = 0, or DAPmn = 1 and CKPmn = 1. The SIp setup time becomes "to SCKp↓" when DAPmn = 0 and CKPmn = 1, or DAPmn = 1 and CKPmn = 0.

Note 3. When DAPmn = 0 and CKPmn = 0, or DAPmn = 1 and CKPmn = 1. The SIp hold time becomes "from SCKp↓" when DAPmn = 0 and CKPmn = 1, or DAPmn = 1 and CKPmn = 0.

Note 4. When DAPmn = 0 and CKPmn = 0, or DAPmn = 1 and CKPmn = 1. The delay time to SOp output becomes "from SCKp↑" when DAPmn = 0 and CKPmn = 1, or DAPmn = 1 and CKPmn = 0.

Note 5. Select the TTL input buffer for the SIp pin and SCKp pin, and the N-ch open drain output (V_{DD} tolerance (for the 48, 32, 24-pin products)/EV_{DD} tolerance (for the 64, 36-pin products)) mode for the SOp pin by using port input mode register g (PIMg) and port output mode register g (POMg). For V_{IH} and V_{IL}, see the DC characteristics with TTL input buffer selected.

Simplified SPI (CSI) mode connection diagram (during communication at different potential)

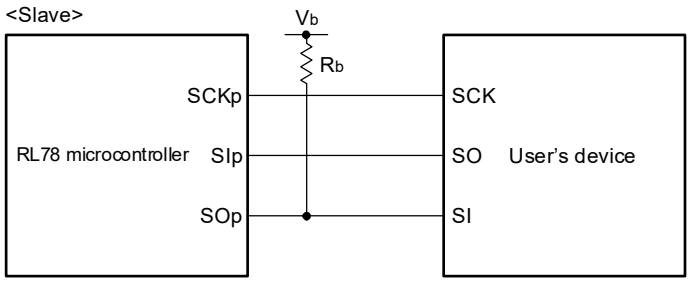

Remark 1. R_b[Ω]: Communication line (SOp) pull-up resistance, C_b[F]: Communication line (SOp) load capacitance, V_b[V]: Communication line voltage

Remark 2. p: CSI number (p = 00, 01, 10, 20), m: Unit number (m = 0, 1), n: Channel number (n = 0 to 3), g: PIM and POM number (g = 0, 1, 3, 5, 7)

Remark 3. f_{MCK}: Serial array unit operation clock frequency
(Operation clock to be set by the CKSmn bit of serial mode register mn (SMRmn).
m: Unit number, n: Channel number (mn = 00, 01, 02, 10))

Remark 4. CSI01 of 48-, 64-pin products, and CSI11 and CSI21 cannot communicate at different potential. Use other CSI for communication at different potential.
Also, communication at different potential cannot be performed during clock synchronous serial communication with the slave select function.

Simplified SPI (CSI) mode serial transfer timing (slave mode) (during communication at different potential)
(When DAPmn = 0 and CKPmn = 0, or DAPmn = 1 and CKPmn = 1.)

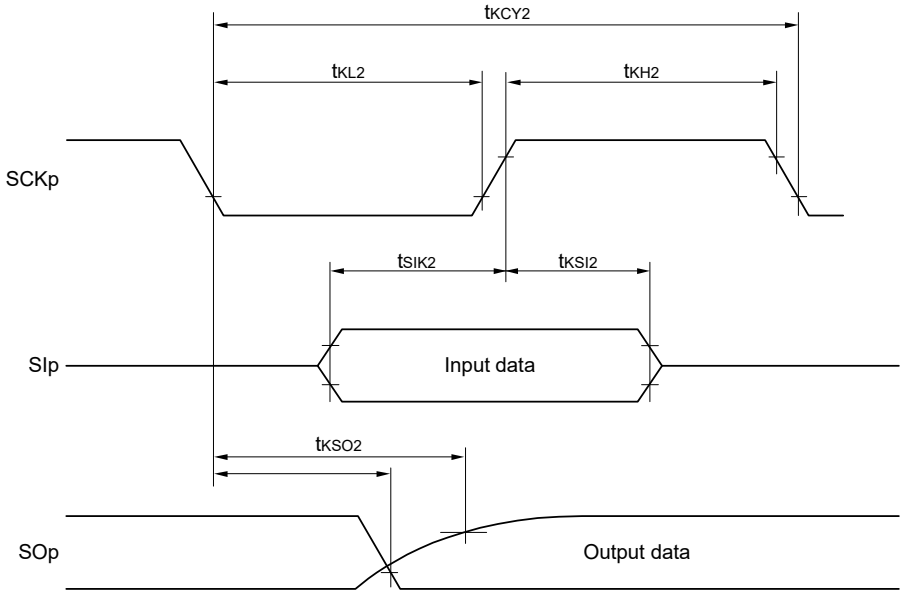

Simplified SPI (CSI) mode serial transfer timing (slave mode) (during communication at different potential)
(When DAPmn = 0 and CKPmn = 1, or DAPmn = 1 and CKPmn = 0.)

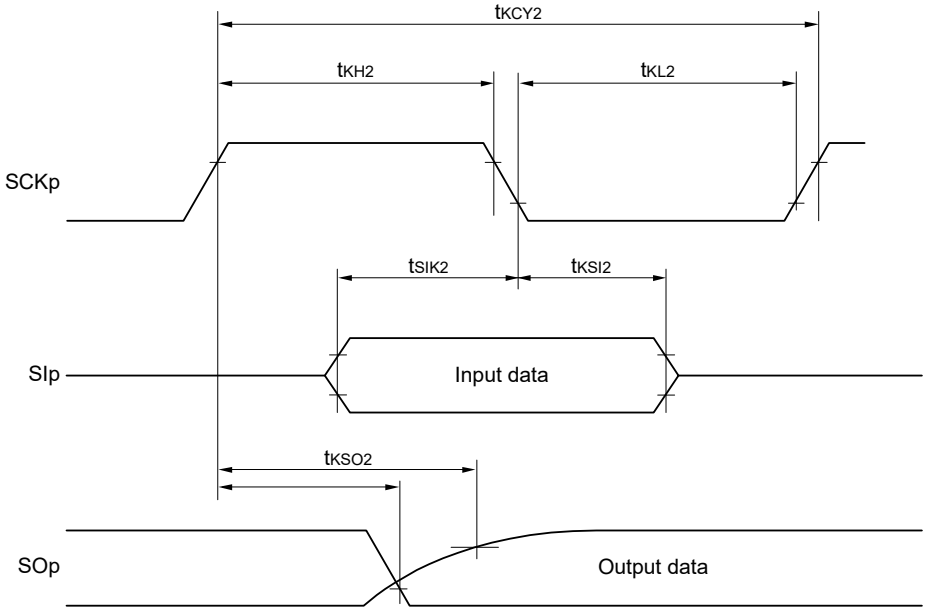

Remark 1. p: CSI number (p = 00, 01, 10, 20), m: Unit number (m = 0, 1), n: Channel number (n = 0 to 3), g: PIM and POM number (g = 0, 1, 3, 5, 7)

Remark 2. CSI01 of 48-, 64-pin products, and CSI11 and CSI21 cannot communicate at different potential. Use other CSI for communication at different potential.
Also, communication at different potential cannot be performed during clock synchronous serial communication with the slave select function.

(8) Communication at different potential (1.8 V, 2.5 V, 3 V) (simplified I²C mode)

(T_A = -40 to +105°C, 2.4 V ≤ EV_{DD0} ≤ V_{DD} ≤ 5.5 V, V_{SS} = EV_{SS0} = 0 V) **(1/2)**

Parameter	Symbol	Conditions	HS (high-speed main) mode		Unit
			MIN.	MAX.	
SCLr clock frequency	f_{SCL}	4.0 V ≤ EV_{DD0} ≤ 5.5 V, 2.7 V ≤ V_b ≤ 4.0 V, C_b = 50 pF, R_b = 2.7 kΩ		400 Note 1	kHz
		2.7 V ≤ EV_{DD0} < 4.0 V, 2.3 V ≤ V_b ≤ 2.7 V, C_b = 50 pF, R_b = 2.7 kΩ		400 Note 1	kHz
		4.0 V ≤ EV_{DD0} ≤ 5.5 V, 2.7 V ≤ V_b ≤ 4.0 V, C_b = 100 pF, R_b = 2.8 kΩ		100 Note 1	kHz
		2.7 V ≤ EV_{DD0} < 4.0 V, 2.3 V ≤ V_b ≤ 2.7 V, C_b = 100 pF, R_b = 2.7 kΩ		100 Note 1	kHz
		2.4 V ≤ EV_{DD0} < 3.3 V, 1.6 V ≤ V_b ≤ 2.0 V, C_b = 100 pF, R_b = 5.5 kΩ		100 Note 1	kHz
Hold time when SCLr = "L"	t_{LOW}	4.0 V ≤ EV_{DD0} ≤ 5.5 V, 2.7 V ≤ V_b ≤ 4.0 V, C_b = 50 pF, R_b = 2.7 kΩ	1200		ns
		2.7 V ≤ EV_{DD0} < 4.0 V, 2.3 V ≤ V_b ≤ 2.7 V, C_b = 50 pF, R_b = 2.7 kΩ	1200		ns
		4.0 V ≤ EV_{DD0} ≤ 5.5 V, 2.7 V ≤ V_b ≤ 4.0 V, C_b = 100 pF, R_b = 2.8 kΩ	4600		ns
		2.7 V ≤ EV_{DD0} < 4.0 V, 2.3 V ≤ V_b ≤ 2.7 V, C_b = 100 pF, R_b = 2.7 kΩ	4600		ns
		2.4 V ≤ EV_{DD0} < 3.3 V, 1.6 V ≤ V_b ≤ 2.0 V, C_b = 100 pF, R_b = 5.5 kΩ	4650		ns
Hold time when SCLr = "H"	t_{HIGH}	4.0 V ≤ EV_{DD0} ≤ 5.5 V, 2.7 V ≤ V_b ≤ 4.0 V, C_b = 50 pF, R_b = 2.7 kΩ	620		ns
		2.7 V ≤ EV_{DD0} < 4.0 V, 2.3 V ≤ V_b ≤ 2.7 V, C_b = 50 pF, R_b = 2.7 kΩ	500		ns
		4.0 V ≤ EV_{DD0} ≤ 5.5 V, 2.7 V ≤ V_b ≤ 4.0 V, C_b = 100 pF, R_b = 2.8 kΩ	2700		ns
		2.7 V ≤ EV_{DD0} < 4.0 V, 2.3 V ≤ V_b ≤ 2.7 V, C_b = 100 pF, R_b = 2.7 kΩ	2400		ns
		2.4 V ≤ EV_{DD0} < 3.3 V, 1.6 V ≤ V_b ≤ 2.0 V, C_b = 100 pF, R_b = 5.5 kΩ	1830		ns

(8) Communication at different potential (1.8 V, 2.5 V, 3 V) (simplified I²C mode)

(T_A = -40 to +105°C, 2.4 V ≤ EV_{DD0} ≤ V_{DD} ≤ 5.5 V, V_{SS} = EV_{SS0} = 0 V) **(2/2)**

Parameter	Symbol	Conditions	HS (high-speed main) mode		Unit
			MIN.	MAX.	
Data setup time (reception)	$t_{SU:DAT}$	4.0 V ≤ EV_{DD0} ≤ 5.5 V, 2.7 V ≤ V_b ≤ 4.0 V, C_b = 50 pF, R_b = 2.7 kΩ	$1/f_{MCK}$ + 340 Note 2		ns
		2.7 V ≤ EV_{DD0} < 4.0 V, 2.3 V ≤ V_b ≤ 2.7 V, C_b = 50 pF, R_b = 2.7 kΩ	$1/f_{MCK}$ + 340 Note 2		ns
		4.0 V ≤ EV_{DD0} ≤ 5.5 V, 2.7 V ≤ V_b ≤ 4.0 V, C_b = 100 pF, R_b = 2.8 kΩ	$1/f_{MCK}$ + 760 Note 2		ns
		2.7 V ≤ EV_{DD0} < 4.0 V, 2.3 V ≤ V_b ≤ 2.7 V, C_b = 100 pF, R_b = 2.7 kΩ	$1/f_{MCK}$ + 760 Note 2		ns
		2.4 V ≤ EV_{DD0} < 3.3 V, 1.6 V ≤ V_b ≤ 2.0 V, C_b = 100 pF, R_b = 5.5 kΩ	$1/f_{MCK}$ + 570 Note 2		ns
Data hold time (transmission)	$t_{HD:DAT}$	4.0 V ≤ EV_{DD0} ≤ 5.5 V, 2.7 V ≤ V_b ≤ 4.0 V, C_b = 50 pF, R_b = 2.7 kΩ	0	770	ns
		2.7 V ≤ EV_{DD0} < 4.0 V, 2.3 V ≤ V_b ≤ 2.7 V, C_b = 50 pF, R_b = 2.7 kΩ	0	770	ns
		4.0 V ≤ EV_{DD0} ≤ 5.5 V, 2.7 V ≤ V_b ≤ 4.0 V, C_b = 100 pF, R_b = 2.8 kΩ	0	1420	ns
		2.7 V ≤ EV_{DD0} < 4.0 V, 2.3 V ≤ V_b ≤ 2.7 V, C_b = 100 pF, R_b = 2.7 kΩ	0	1420	ns
		2.4 V ≤ EV_{DD0} < 3.3 V, 1.6 V ≤ V_b ≤ 2.0 V, C_b = 100 pF, R_b = 5.5 kΩ	0	1215	ns

Note 1. The value must also be equal to or less than f_{MCK}/4.

Note 2. Set the f_{MCK} value to keep the hold time of SCLr = "L" and SCLr = "H".

Caution **Select the TTL input buffer and the N-ch open drain output (V_{DD} tolerance (for the 48-, 32-, 24-pin products)/EV_{DD} tolerance (for the 64-, 36-pin products)) mode for the SDAr pin and the N-ch open drain output (V_{DD} tolerance (for the 48-, 32-, 24-pin products)/EV_{DD} tolerance (for the 64-, 36-pin products)) mode for the SCLr pin by using port input mode register g (PIMg) and port output mode register g (POMg). For V_{IH} and V_{IL}, see the DC characteristics with TTL input buffer selected.**

(**Remarks** are listed on the next page.)

Simplified I2C mode connection diagram (during communication at different potential)

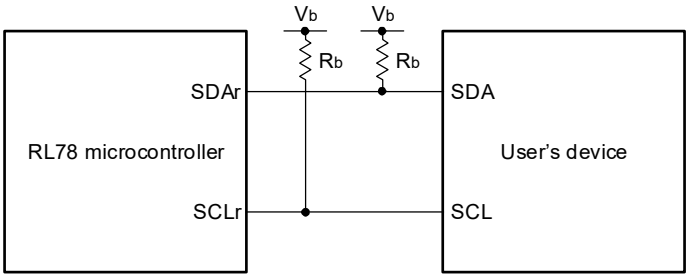

Simplified I2C mode serial transfer timing (during communication at different potential)

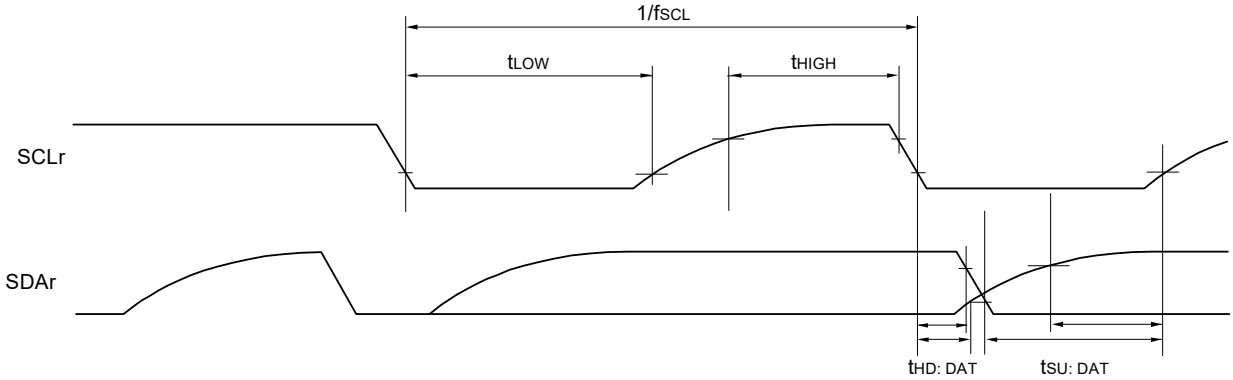

Remark 1. R_b[Ω]: Communication line (SDAr, SCLr) pull-up resistance, C_b[F]: Communication line (SDAr, SCLr) load capacitance, V_b[V]: Communication line voltage

Remark 2. r: IIC number (r = 00, 01, 10, 11, 20), g: PIM, POM number (g = 0, 1, 3, 5, 7)

Remark 3. f_{MCK}: Serial array unit operation clock frequency
(Operation clock to be set by the CKSmn bit of serial mode register mn (SMRmn). m: Unit number (m = 0, 1), n: Channel number (n = 0, 2), mn = 00, 01, 02, 10)

38.5.2 Serial interface IICA

(T_A = -40 to +105°C, 2.4 V ≤ EV_{DD0} ≤ V_{DD} ≤ 5.5 V, V_{SS} = EV_{SS0} = 0 V)

Parameter	Symbol	Conditions	HS (high-speed main) mode				Unit
			Standard mode		Fast mode		
			MIN.	MAX.	MIN.	MAX.	
SCLA0 clock frequency	f_{SCL}	Fast mode: f_{CLK} ≥ 3.5 MHz	—	—	0	400	kHz
		Standard mode: f_{CLK} ≥ 1 MHz	0	100	—	—	kHz
Setup time of restart condition	$t_{SU: STA}$		4.7		0.6		µs
Hold time Note 1	$t_{HD: STA}$		4.0		0.6		µs
Hold time when SCLA0 = "L"	t_{LOW}		4.7		1.3		µs
Hold time when SCLA0 = "H"	t_{HIGH}		4.0		0.6		µs
Data setup time (reception)	$t_{SU: DAT}$		250		100		ns
Data hold time (transmission) Note 2	$t_{HD: DAT}$		0	3.45	0	0.9	µs
Setup time of stop condition	$t_{SU: STO}$		4.0		0.6		µs
Bus-free time	t_{BUF}		4.7		1.3		µs

Note 1. The first clock pulse is generated after this period when the start/restart condition is detected.

Note 2. The maximum value (MAX.) of $t_{HD: DAT}$ is during normal transfer and a clock stretch state is inserted in the ACK (acknowledge) timing.

Caution **The values in the above table are applied even when bit 2 (PIOR02) in the peripheral I/O redirection register 0 (PIOR0) is 1. At this time, the pin characteristics (I_{OH1}, I_{OL1}, V_{OH1}, V_{OL1}) must satisfy the values in the redirect destination.**

Remark The maximum value of C_b (communication line capacitance) and the value of R_b (communication line pull-up resistor) at that time in each mode are as follows.

Standard mode: C_b = 400 pF, R_b = 2.7 kΩ

Fast mode: C_b = 320 pF, R_b = 1.1 kΩ

IICA serial transfer timing

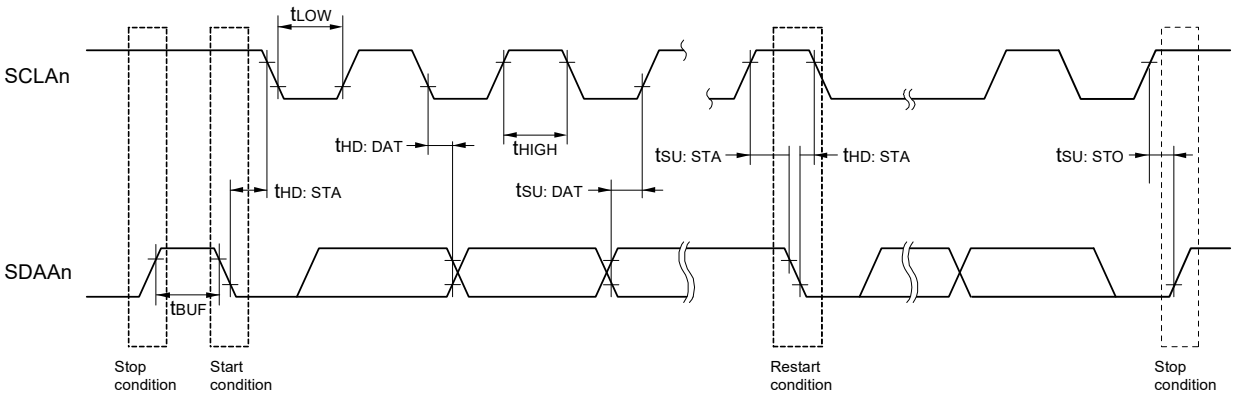

Remark n = 0, 1

38.6 Analog Characteristics

38.6.1 A/D converter characteristics

Classification of A/D converter characteristics

Reference Voltage / Input channel	Reference voltage (+) = AV_{REFP} Reference voltage (-) = AV_{REFM}	Reference voltage (+) = V_{DD} Reference voltage (-) = V_{SS}	Reference voltage (+) = V_{BGR} Reference voltage (-)= AV_{REFM}
ANI0 to ANI7	Refer to **38.6.1 (1)**.	Refer to **38.6.1 (3)**.	Refer to **38.6.1 (4)**.
ANI16 to ANI24	Refer to **38.6.1 (2)**.		
Internal reference voltage Temperature sensor output voltage	Refer to **38.6.1 (1)**.		—

(1) When reference voltage (+) = AV_{REFP}/ANI0 (ADREFP1 = 0, ADREFP0 = 1), reference voltage (-) = AV_{REFM}/ANI1 (ADREFM = 1), target pin: ANI2 to ANI7, internal reference voltage, and temperature sensor output voltage

(T_A = -40 to +105°C, 2.4 V ≤ AV_{REFP} ≤ V_{DD} ≤ 5.5 V, V_{SS} = 0 V, Reference voltage (+) = AV_{REFP}, Reference voltage (-) = AV_{REFM} = 0 V)

Parameter	Symbol	Conditions		MIN.	TYP.	MAX.	Unit
Resolution	RES			8		10	bit
Overall error Note 1	AINL	10-bit resolution AV_{REFP} = V_{DD} Note 3	2.4 V ≤ AV_{REFP} ≤ 5.5 V		1.2	±3.5	LSB
Conversion time	t_{CONV}	10-bit resolution Target pin: ANI2 to ANI14	3.6 V ≤ V_{DD} ≤ 5.5 V	2.125		39	μs
			2.7 V ≤ V_{DD} ≤ 5.5 V	3.1875		39	μs
			2.4 V ≤ V_{DD} ≤ 5.5 V	17		39	μs
		10-bit resolution Target pin: Internal reference voltage, and temperature sensor output voltage (HS (high-speed main) mode)	3.6 V ≤ V_{DD} ≤ 5.5 V	2.375		39	μs
			2.7 V ≤ V_{DD} ≤ 5.5 V	3.5625		39	μs
			2.4 V ≤ V_{DD} ≤ 5.5 V	17		39	μs
Zero-scale error Notes 1, 2	E_{ZS}	10-bit resolution AV_{REFP} = V_{DD} Note 3	2.4 V ≤ AV_{REFP} ≤ 5.5 V			±0.25	%FSR
Full-scale error Notes 1, 2	E_{FS}	10-bit resolution AV_{REFP} = V_{DD} Note 3	2.4 V ≤ AV_{REFP} ≤ 5.5 V			±0.25	%FSR
Integral linearity error Note 1	ILE	10-bit resolution AV_{REFP} = V_{DD} Note 3	2.4 V ≤ AV_{REFP} ≤ 5.5 V			±2.5	LSB
Differential linearity error Note 1	DLE	10-bit resolution AV_{REFP} = V_{DD} Note 3	2.4 V ≤ AV_{REFP} ≤ 5.5 V			±1.5	LSB
Analog input voltage	V_{AIN}	ANI2 to ANI7		0		AV_{REFP}	V
		Internal reference voltage output (2.4 V ≤ V_{DD} ≤ 5.5 V, HS (high-speed main) mode)		V_{BGR} Note 4			V
		Temperature sensor output voltage (2.4 V ≤ V_{DD} ≤ 5.5 V, HS (high-speed main) mode)		V_{TMPS25} Note 4			V

Note 1. Excludes quantization error (±1/2 LSB).

Note 2. This value is indicated as a ratio (%FSR) to the full-scale value.

Note 3. When AV_{REFP} < V_{DD}, the MAX. values are as follows.

Overall error: Add ±1.0 LSB to the MAX. value when AV_{REFP} = V_{DD}.

Zero-scale error/Full-scale error: Add ±0.05%FSR to the MAX. value when AV_{REFP} = V_{DD}.

Integral linearity error/ Differential linearity error: Add ±0.5 LSB to the MAX. value when AV_{REFP} = V_{DD}.

Note 4. Refer to **38.6.2 Temperature sensor characteristics/internal reference voltage characteristic**.

(2) When reference voltage (+) = AV_{REFP}/ANI0 (ADREFP1 = 0, ADREFP0 = 1), reference voltage (-) = AV_{REFM}/ANI1 (ADREFM = 1), target pin: ANI16 to ANI24

(T_A = -40 to +105°C, 2.4 V ≤ EV_{DD0} ≤ V_{DD} ≤ 5.5 V, 2.4 V ≤ AV_{REFP} ≤ V_{DD} ≤ 5.5 V,
V_{SS} = EV_{SS0} = 0 V, Reference voltage (+) = AV_{REFP}, Reference voltage (-) = AV_{REFM} = 0 V)

Parameter	Symbol	Conditions		MIN.	TYP.	MAX.	Unit
Resolution	RES			8		10	bit
Overall error Note 1	AINL	10-bit resolution EV_{DD0} ≤ AV_{REFP} = V_{DD} Notes 3, 4	2.4 V ≤ AV_{REFP} ≤ 5.5 V		1.2	±5.0	LSB
Conversion time	t_{CONV}	10-bit resolution Target ANI pin: ANI16 to ANI20	3.6 V ≤ V_{DD} ≤ 5.5 V	2.125		39	μs
			2.7 V ≤ V_{DD} ≤ 5.5 V	3.1875		39	μs
			2.4 V ≤ V_{DD} ≤ 5.5 V	17		39	μs
Zero-scale error Notes 1, 2	E_{ZS}	10-bit resolution EV_{DD0} ≤ AV_{REFP} = V_{DD} Notes 3, 4	2.4 V ≤ AV_{REFP} ≤ 5.5 V			±0.35	%FSR
Full-scale error Notes 1, 2	E_{FS}	10-bit resolution EV_{DD0} ≤ AV_{REFP} = V_{DD} Notes 3, 4	2.4 V ≤ AV_{REFP} ≤ 5.5 V			±0.35	%FSR
Integral linearity error Note 1	ILE	10-bit resolution EV_{DD0} ≤ AV_{REFP} = V_{DD} Notes 3, 4	2.4 V ≤ AV_{REFP} ≤ 5.5 V			±3.5	LSB
Differential linearity error Note 1	DLE	10-bit resolution EV_{DD0} ≤ AV_{REFP} = V_{DD} Notes 3, 4	2.4 V ≤ AV_{REFP} ≤ 5.5 V			±2.0	LSB
Analog input voltage	V_{AIN}	ANI16 to ANI24		0		AV_{REFP} and EV_{DD0}	V

Note 1. Excludes quantization error (±1/2 LSB).

Note 2. This value is indicated as a ratio (%FSR) to the full-scale value.

Note 3. When EV_{DD0} ≤ AV_{REFP} ≤ V_{DD}, the MAX. values are as follows.

Overall error: Add ±1.0 LSB to the MAX. value when AV_{REFP} = V_{DD}.
Zero-scale error/Full-scale error: Add ±0.05%FSR to the MAX. value when AV_{REFP} = V_{DD}.
Integral linearity error/ Differential linearity error: Add ±0.5 LSB to the MAX. value when AV_{REFP} = V_{DD}.

Note 4. When AV_{REFP} < EV_{DD0} ≤ V_{DD}, the MAX. values are as follows.

Overall error: Add ±4.0 LSB to the MAX. value when AV_{REFP} = V_{DD}.
Zero-scale error/Full-scale error: Add ±0.20%FSR to the MAX. value when AV_{REFP} = V_{DD}.
Integral linearity error/ Differential linearity error: Add ±2.0 LSB to the MAX. value when AV_{REFP} = V_{DD}.

(3) When reference voltage (+) = V_{DD} (ADREFP1 = 0, ADREFP0 = 0), reference voltage (-) = V_{SS} (ADREFM = 0), target pin: ANI0 to ANI7, ANI16 to ANI24, internal reference voltage, and temperature sensor output voltage

(T_A = -40 to +105°C, 2.4 V ≤ EV_{DD0} ≤ V_{DD} ≤ 5.5 V, V_{SS} = EV_{SS0} = 0 V, Reference voltage (+) = V_{DD}, Reference voltage (-) = V_{SS})

Parameter	Symbol	Conditions		MIN.	TYP.	MAX.	Unit
Resolution	RES			8		10	bit
Overall error Note 1	AINL	10-bit resolution	2.4 V ≤ V_{DD} ≤ 5.5 V		1.2	±7.0	LSB
Conversion time	t_{CONV}	10-bit resolution Target pin: ANI0 to ANI14, ANI16 to ANI20	3.6 V ≤ V_{DD} ≤ 5.5 V	2.125		39	μs
			2.7 V ≤ V_{DD} ≤ 5.5 V	3.1875		39	μs
			2.4 V ≤ V_{DD} ≤ 5.5 V	17		39	μs
		10-bit resolution Target pin: internal reference voltage, and temperature sensor output voltage (HS (high-speed main) mode)	3.6 V ≤ V_{DD} ≤ 5.5 V	2.375		39	μs
			2.7 V ≤ V_{DD} ≤ 5.5 V	3.5625		39	μs
			2.4 V ≤ V_{DD} ≤ 5.5 V	17		39	μs
Zero-scale error Notes 1, 2	E_{ZS}	10-bit resolution	2.4 V ≤ V_{DD} ≤ 5.5 V			±0.60	%FSR
Full-scale error Notes 1, 2	E_{FS}	10-bit resolution	2.4 V ≤ V_{DD} ≤ 5.5 V			±0.60	%FSR
Integral linearity error Note 1	ILE	10-bit resolution	2.4 V ≤ V_{DD} ≤ 5.5 V			±4.0	LSB
Differential linearity error Note 1	DLE	10-bit resolution	2.4 V ≤ V_{DD} ≤ 5.5 V			±2.0	LSB
Analog input voltage	V_{AIN}	ANI0 to ANI7		0		V_{DD}	V
		ANI16 to ANI24		0		EV_{DD0}	V
		Internal reference voltage (2.4 V ≤ V_{DD} ≤ 5.5 V, HS (high-speed main) mode)		V_{BGR} Note 3			V
		Temperature sensor output voltage (2.4 V ≤ V_{DD} ≤ 5.5 V, HS (high-speed main) mode)		V_{TMPS25} Note 3			V

Note 1. Excludes quantization error (±1/2 LSB).

Note 2. This value is indicated as a ratio (% FSR) to the full-scale value.

Note 3. Refer to **38.6.2 Temperature sensor characteristics/internal reference voltage characteristic**.

(4) When reference voltage (+) = Internal reference voltage (ADREFP1 = 1, ADREFP0 = 0), reference voltage (-) = AV_{REFM}/ANI1 (ADREFM = 1), target pin: ANI0, ANI2 to ANI7, ANI16 to ANI24

(T_A = -40 to +105°C, 2.4 V ≤ V_{DD} ≤ 5.5 V, 2.4 V ≤ EV_{DD0} ≤ V_{DD}, V_{SS} = EV_{SS0} = 0 V, Reference voltage (+) = V_{BGR} Note 3, Reference voltage (-) = AV_{REFM} = 0 V Note 4, HS (high-speed main) mode)

Parameter	Symbol	Conditions		MIN.	TYP.	MAX.	Unit
Resolution	RES				8		bit
Conversion time	t_{CONV}	8-bit resolution	2.4 V ≤ V_{DD} ≤ 5.5 V	17		39	μs
Zero-scale error Notes 1, 2	E_{ZS}	8-bit resolution	2.4 V ≤ V_{DD} ≤ 5.5 V			±0.60	% FSR
Integral linearity error Note 1	ILE	8-bit resolution	2.4 V ≤ V_{DD} ≤ 5.5 V			±2.0	LSB
Differential linearity error Note 1	DLE	8-bit resolution	2.4 V ≤ V_{DD} ≤ 5.5 V			±1.0	LSB
Analog input voltage	V_{AIN}			0		V_{BGR} Note 3	V

Note 1. Excludes quantization error (±1/2 LSB).

Note 2. This value is indicated as a ratio (% FSR) to the full-scale value.

Note 3. Refer to **38.6.2 Temperature sensor characteristics/internal reference voltage characteristic**.

Note 4. When reference voltage (-) = V_{SS}, the MAX. values are as follows.

Zero-scale error: Add ±0.35%FSR to the MAX. value when reference voltage (-) = AV_{REFM}.

Integral linearity error: Add ±0.5 LSB to the MAX. value when reference voltage (-) = AV_{REFM}.

Differential linearity error: Add ±0.2 LSB to the MAX. value when reference voltage (-) = AV_{REFM}.

38.6.2 Temperature sensor characteristics/internal reference voltage characteristic

(T_A = -40 to +105°C, 2.4 V ≤ V_{DD} ≤ 5.5 V, V_{SS} = EV_{SS0} = 0 V, HS (high-speed main) mode)

Parameter	Symbol	Conditions	MIN.	TYP.	MAX.	Unit
Temperature sensor output voltage	V_{TMPS25}	Setting ADS register = 80H, T_A = +25°C		1.05		V
Internal reference voltage	V_{BGR}	Setting ADS register = 81H	1.38	1.45	1.5	V
Temperature coefficient	F_{VTMPS}	Temperature sensor that depends on the temperature		-3.6		mV/°C
Operation stabilization wait time	t_{AMP}		5			μs

38.6.3 D/A converter characteristics

(T_A = -40 to +105°C, 2.4 V ≤ EV_{SS0} ≤ V_{DD} ≤ 5.5 V, V_{SS} = EV_{SS0} = 0 V)

Parameter	Symbol	Conditions		MIN.	TYP.	MAX.	Unit
Resolution	RES					8	bit
Overall error	AINL	Rload = 4 MΩ	2.4 V ≤ V_{DD} ≤ 5.5 V			±2.5	LSB
		Rload = 8 MΩ	2.4 V ≤ V_{DD} ≤ 5.5 V			±2.5	LSB
Settling time	t_{SET}	Cload = 20 pF	2.7 V ≤ V_{DD} ≤ 5.5 V			3	μs
			2.4 V ≤ V_{DD} < 2.7 V			6	μs

38.6.4 Comparator

(T_A = -40 to +105°C, 2.7 V ≤ V_{DD} ≤ 5.5 V, V_{SS} = 0 V)

Parameter	Symbol	Conditions		MIN.	TYP.	MAX.	Unit
Input offset voltage	V_{IOCMP}				±5	±40	mV
Input voltage range	V_{ICMP}			0		V_{DD}	V
Internal reference voltage deviation	ΔV_{IREF}	CmRVM register value : 7FH to 80H (m = 0, 1)				±2	LSB
		Other than above				±1	LSB
Response Time	t_{CR}, t_{CF}	Input amplitude±100mV			70	150	ns
Operation stabilization time[Note 1]	t_{CMP}	CMPn = 0→1	V_{DD} = 3.3 to 5.5 V			1	μs
			V_{DD} = 2.7 to 3.3 V			3	μs
Reference voltage stabilization wait time	t_{VR}	CVRE : 0→1[Note 2]				20	μs
Operation current	I_{CMPDD}	Separately, it is defined as the operation current of peripheral functions.					

Note 1. Time taken until the comparator satisfies the DC/AC characteristics after the comparator operation enable signal is switched (CMPnEN = 0 → 1).

Note 2. Enable comparator output (CnOE bit = 1; n = 0 to 1) after enabling operation of the internal reference voltage generator (by setting the CVREm bit to 1; m = 0 to 1) and waiting for the operation stabilization time to elapse.

38.6.5 PGA

(T_A = -40 to +105°C, 2.7 V ≤ V_{DD} ≤ 5.5 V, V_{SS} = 0 V)

Parameter	Symbol	Conditions		MIN.	TYP.	MAX.	Unit
Input offset voltage	V_{IOPGA}					±10	mV
Input voltage range	V_{IPGA}			0		0.9 × V_{DD}/Gain	V
Output voltage range	V_{IOHPGA}			0.93 × V_{DD}			V
	V_{IOLPGA}					0.07 × V_{DD}	V
Gain error		x4, x8				±1	%
		x16				±1.5	%
		x32				±2	%
Slew rate	SR_{RPGA}	Rising When Vin= 0.1V_{DD}/gain to 0.9V_{DD}/gain. 10 to 90% of output voltage amplitude	4.0 V ≤ V_{DD} ≤ 5.5 V (Other than x32)	3.5			V/μs
			4.0 V ≤ V_{DD} ≤ 5.5 V (x32)	3.0			
			2.7 V ≤ V_{DD} ≤ 4.0V	0.5			
	SR_{FPGA}	Falling When Vin= 0.1V_{DD}/gain to 0.9V_{DD}/gain. 90 to 10% of output voltage amplitude	4.0 V ≤ V_{DD} ≤ 5.5 V (Other than x32)	3.5			
			4.0 V ≤ V_{DD} ≤ 5.5 V (x32)	3.0			
			2.7 V ≤ V_{DD} ≤ 4.0V	0.5			
Reference voltage stabilization wait time[Note 1]	t_{PGA}	x4, x8				5	μs
		x16, x32				10	μs
Operation current	I_{PGADD}	Separately, it is defined as the operation current of peripheral functions.					

Note 1. Time required until a state is entered where the DC and AC specifications of the PGA are satisfied after the PGA operation has been enabled (PGAEN = 1).

38.6.6 POR circuit characteristics

(T_A = -40 to +105°C, V_{SS} = 0 V)

Parameter	Symbol	Conditions	MIN.	TYP.	MAX.	Unit
Power on/down reset threshold	V_{POR}	Voltage threshold on V_{DD} rising	1.45	1.51	1.55	V
	V_{PDR}	Voltage threshold on V_{DD} falling Note 1	1.44	1.50	1.54	V
Minimum pulse width Note 2	T_{PW}		300			μs

Note 1. However, when the operating voltage falls while the LVD is off, enter STOP mode, or enable the reset status using the external reset pin before the voltage falls below the operating voltage range shown in **38.4 AC Characteristics**.

Note 2. Minimum time required for a POR reset when V_{DD} exceeds below V_{PDR}. This is also the minimum time required for a POR reset from when V_{DD} exceeds below 0.7 V to when V_{DD} exceeds V_{POR} while STOP mode is entered or the main system clock is stopped through setting bit 0 (HIOSTOP) and bit 7 (MSTOP) in the clock operation status control register (CSC).

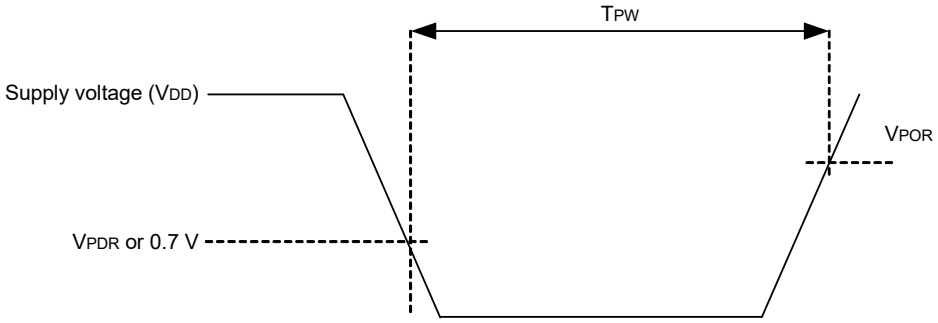

38.6.7 LVD circuit characteristics

(1) Reset Mode and Interrupt Mode

(T_A = -40 to +105°C, $V_{PDR} \le V_{DD} \le$ 5.5 V, V_{SS} = 0 V)

Parameter		Symbol	Conditions	MIN.	TYP.	MAX.	Unit
Voltage detection threshold	Supply voltage level	V_{LVD0}	Rising edge	3.90	4.06	4.22	V
			Falling edge	3.83	3.98	4.13	V
		V_{LVD1}	Rising edge	3.60	3.75	3.90	V
			Falling edge	3.53	3.67	3.81	V
		V_{LVD2}	Rising edge	3.01	3.13	3.25	V
			Falling edge	2.94	3.06	3.18	V
		V_{LVD3}	Rising edge	2.90	3.02	3.14	V
			Falling edge	2.85	2.96	3.07	V
		V_{LVD4}	Rising edge	2.81	2.92	3.03	V
			Falling edge	2.75	2.86	2.97	V
		V_{LVD5}	Rising edge	2.70	2.81	2.92	V
			Falling edge	2.64	2.75	2.86	V
		V_{LVD6}	Rising edge	2.61	2.71	2.81	V
			Falling edge	2.55	2.65	2.75	V
		V_{LVD7}	Rising edge	2.51	2.61	2.71	V
			Falling edge	2.45	2.55	2.65	V
Minimum pulse width		t_{LW}		300			μs
Detection delay time						300	μs

(2) Interrupt & Reset Mode

(T_A = -40 to +105°C, $V_{PDR} \le V_{DD} \le$ 5.5 V, V_{SS} = 0 V)

Parameter	Symbol	Conditions			MIN.	TYP.	MAX.	Unit
Voltage detection threshold	V_{LVDD0}	V_{POC2}, V_{POC1}, V_{POC0} = 0, 1, 1, falling reset voltage			2.64	2.75	2.86	V
	V_{LVDD1}		LVIS1, LVIS0 = 1, 0	Rising release reset voltage	2.81	2.92	3.03	V
				Falling interrupt voltage	2.75	2.86	2.97	V
	V_{LVDD2}		LVIS1, LVIS0 = 0, 1	Rising release reset voltage	2.90	3.02	3.14	V
				Falling interrupt voltage	2.85	2.96	3.07	V
	V_{LVDD3}		LVIS1, LVIS0 = 0, 0	Rising release reset voltage	3.90	4.06	4.22	V
				Falling interrupt voltage	3.83	3.98	4.13	V

38.6.8 Power supply voltage rising slope characteristics

(T_A = -40 to +105°C, V_{SS} = 0 V)

Parameter	Symbol	Conditions	MIN.	TYP.	MAX.	Unit
Power supply voltage rising slope	SV_{DD}				54	V/ms

Caution **Make sure to keep the internal reset state by the LVD circuit or an external reset until V_{DD} reaches the operating voltage range shown in 38.4 AC Characteristics.**

38.7 RAM Data Retention Characteristics

(T_A = -40 to +105°C, V_{SS} = 0V)

Parameter	Symbol	Conditions	MIN.	TYP.	MAX.	Unit
Data retention supply voltage	V_{DDDR}		1.44 Notes 1, 2		5.5	V

Note 1. The value depends on the POR detection voltage. When the voltage drops, the RAM data is retained before a POR reset is effected, but RAM data is not retained when a POR reset is effected.

Note 2. Enter STOP mode before the supply voltage falls below the recommended operating voltage.

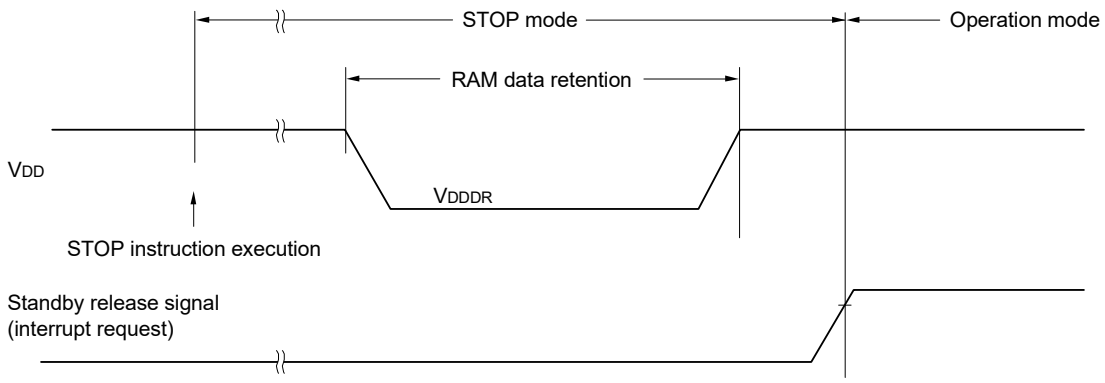

38.8 Flash Memory Programming Characteristics

(T_A = -40 to +105°C, 2.4 V $\le V_{DD} \le$ 5.5 V, V_{SS} = 0 V)

Parameter	Symbol	Conditions	MIN.	TYP.	MAX.	Unit
System clock frequency	f_{CLK}	2.4 V $\le V_{DD} \le$ 5.5 V	1		32	MHz

(T_A = -40 to +105°C, 2.4 V ≤ V_{DD} ≤ 5.5 V, V_{SS} = 0 V)

Parameter	Symbol	Conditions		MIN.	TYP.	MAX.	Unit
Number of code flash rewrites Notes 1, 2, 3	C_{erwr}	Retained for 20 years	T_A = 85°C	1,000			Times
Number of data flash rewrites Notes 1, 2, 3		Retained for 1 year	T_A = 25°C		1,000,000		
		Retained for 5 years	T_A = 85°C	100,000			
		Retained for 20 years	T_A = 85°C	10,000			

Note 1. 1 erase + 1 write after the erase is regarded as 1 rewrite. The retaining years are until next rewrite after the rewrite.

Note 2. When using flash memory programmer and Renesas Electronics self-programming library

Note 3. These are the characteristics of the flash memory and the results obtained from reliability testing by Renesas Electronics Corporation.

38.9 Dedicated Flash Memory Programmer Communication (UART)

(T_A = -40 to +105°C, 2.4 V ≤ EV_{DD0} ≤ V_{DD} ≤ 5.5 V, V_{SS} = EV_{SS0} = 0 V)

Parameter	Symbol	Conditions	MIN.	TYP.	MAX.	Unit
Transfer rate		During serial programming	115,200		1,000,000	bps

38.10 Timing of Entry to Flash Memory Programming Modes

(T_A = -40 to +105°C, 2.4 V ≤ EV_{DD0} ≤ V_{DD} ≤ 5.5 V, V_{SS} = EV_{SS0} = 0 V)

Parameter	Symbol	Conditions	MIN.	TYP.	MAX.	Unit
How long from when an external reset ends until the initial communication settings are specified	t_{SUINIT}	POR and LVD reset must end before the external reset ends.			100	ms
How long from when the TOOL0 pin is placed at the low level until an external reset ends	t_{SU}	POR and LVD reset must end before the external reset ends.	10			μs
How long the TOOL0 pin must be kept at the low level after an external reset ends (excluding the processing time of the firmware to control the flash memory)	t_{HD}	POR and LVD reset must end before the external reset ends.	1			ms

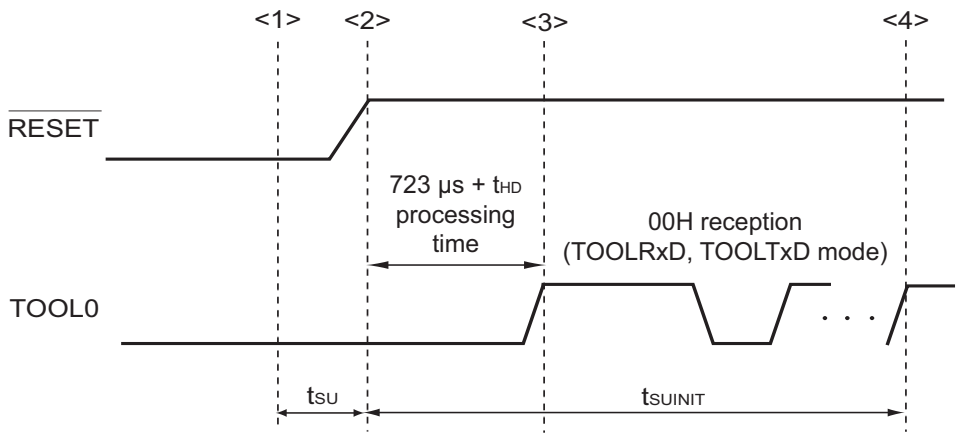

<1> The low level is input to the TOOL0 pin.
<2> The external reset ends (POR and LVD reset must end before the external reset ends).
<3> The TOOL0 pin is set to the high level.
<4> Setting of the flash memory programming mode by UART reception and complete the baud rate setting.

Remark t_{SUINIT}: The segment shows that it is necessary to finish specifying the initial communication settings within 100 ms from when the external resets end.
t_{SU}: How long from when the TOOL0 pin is placed at the low level until a pin reset ends
t_{HD}: How long to keep the TOOL0 pin at the low level from when the external resets end (excluding the processing time of the firmware to control the flash memory)

CHAPTER 39 PACKAGE DRAWINGS

39.1 24-pin products

JEITA Package Code	RENESAS Code	Previous Code	MASS (TYP.) [g]
P-HWQFN24-4x4-0.50	PWQN0024KE-A	P24K8-50-CAB-1	0.04

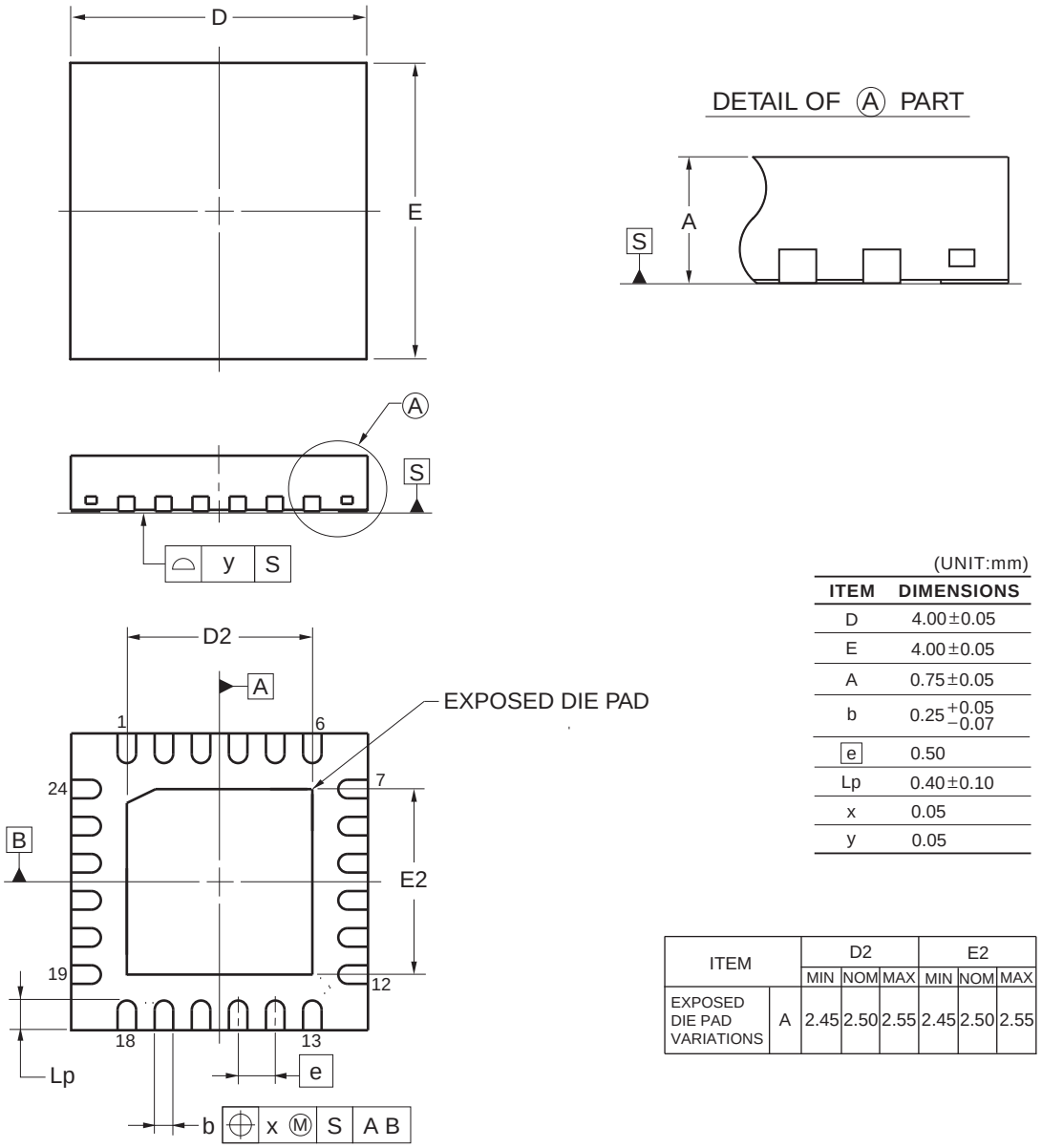

(UNIT:mm)

ITEM	DIMENSIONS
D	4.00±0.05
E	4.00±0.05
A	0.75±0.05
b	$0.25^{+0.05}_{-0.07}$
e	0.50
Lp	0.40±0.10
x	0.05
y	0.05

ITEM		D2			E2		
		MIN	NOM	MAX	MIN	NOM	MAX
EXPOSED DIE PAD VARIATIONS	A	2.45	2.50	2.55	2.45	2.50	2.55

©2012 Renesas Electronics Corporation. All rights reserved.

JEITA Package code	RENESAS code	MASS(TYP.)[g]
P-HWQFN024-4x4-0.50	PWQN0024KF-A	0.04

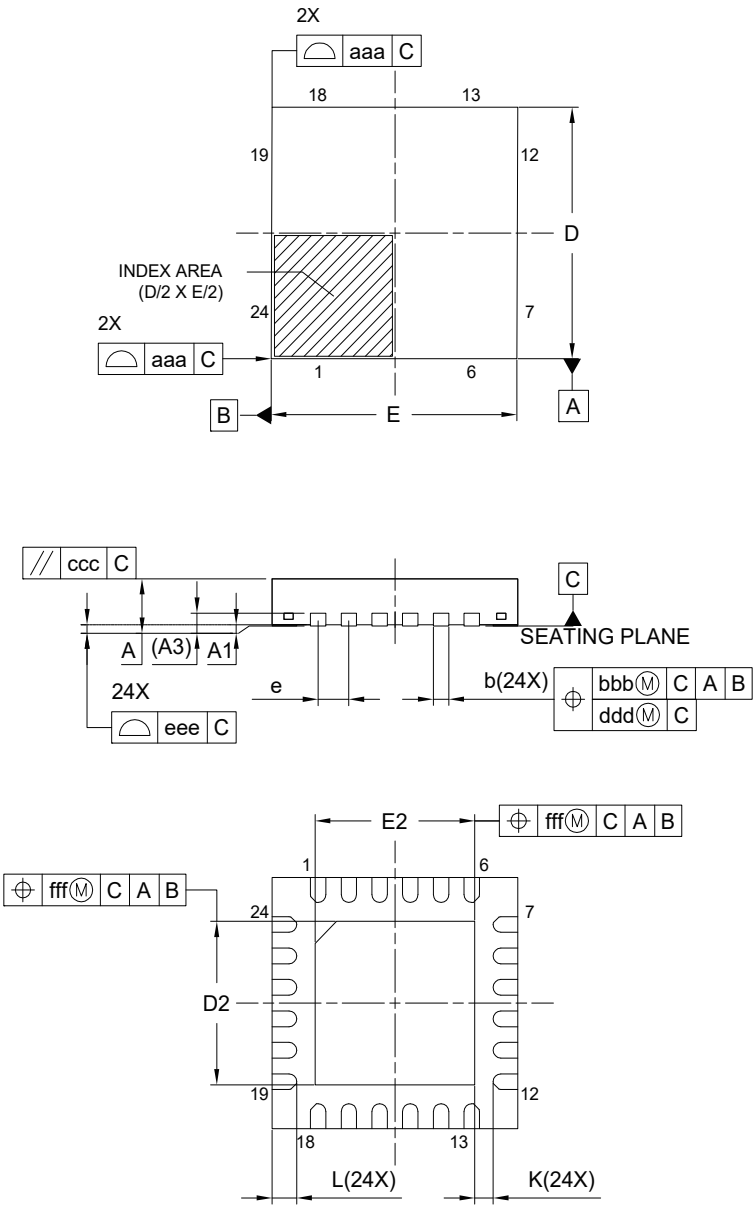

Reference Symbol	Dimension in Millimeters		
	Min.	Nom.	Max.
A	-	-	0.80
A1	0.00	0.02	0.05
A3	0.203 REF.		
b	0.18	0.25	0.30
D	4.00 BSC		
E	4.00 BSC		
e	0.50 BSC		
L	0.35	0.40	0.45
K	0.20	-	-
D2	2.55	2.60	2.65
E2	2.55	2.60	2.65
aaa	0.15		
bbb	0.10		
ccc	0.10		
ddd	0.05		
eee	0.08		
fff	0.10		

JEITA Package Code	RENESAS Code	MASS(Typ.)[g]
P-HWQFN24-4×4-0.50	PWQN0024KH-A	0.04

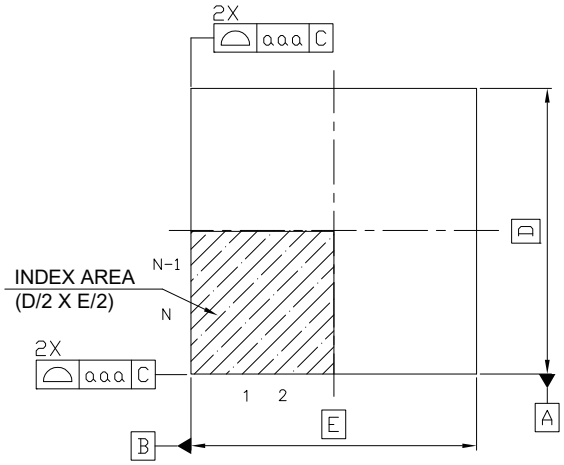

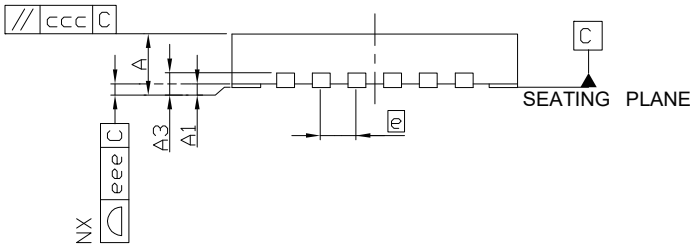

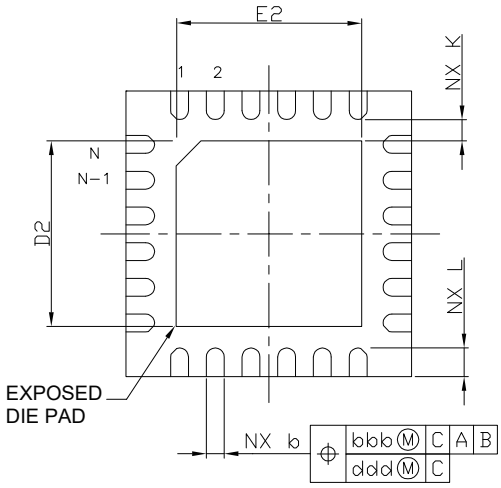

Referenc Symbol	Dimension in Millimeters		
	Min.	Nom.	Max.
A	—	—	0.80
A_1	0.00	—	0.05
A_3	0.20 REF.		
b	0.20	0.25	0.30
D	—	4.00	—
E	—	4.00	—
e	—	0.50	—
N	24		
L	0.30	0.40	0.50
K	0.20	—	—
D_2	2.50	2.60	2.70
E_2	2.50	2.60	2.70
aaa	—	—	0.15
bbb	—	—	0.10
ccc	—	—	0.10
ddd	—	—	0.05
eee	—	—	0.08

39.2 32-pin products

JEITA Package code	RENESAS code	MASS(TYP.)[g]
P-HWQFN032-5x5-0.50	PWQN0032KE-A	0.06

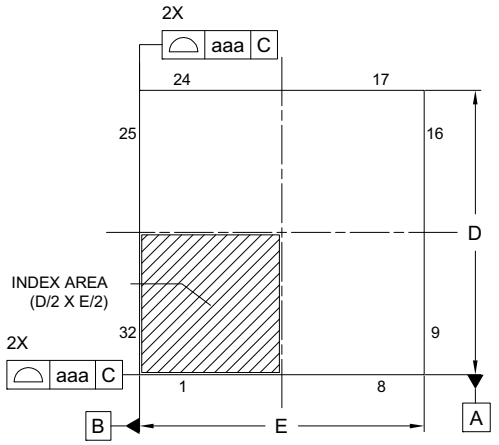

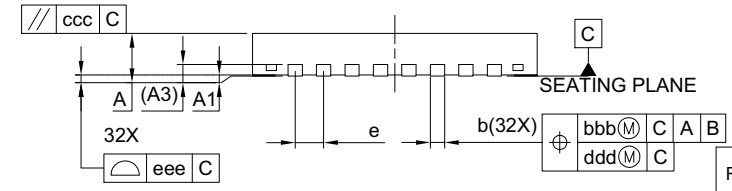

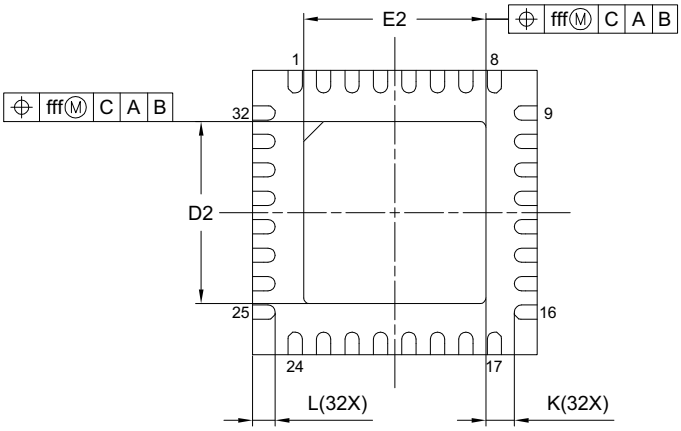

Reference Symbol	Dimension in Millimeters		
	Min.	Nom.	Max.
A	—	—	0.80
A_1	0.00	0.02	0.05
A_3	0.203 REF.		
b	0.18	0.25	0.30
D	5.00 BSC		
E	5.00 BSC		
e	0.50 BSC		
L	0.35	0.40	0.45
K	0.20	—	—
D_2	3.15	3.20	3.25
E_2	3.15	3.20	3.25
aaa	0.15		
bbb	0.10		
ccc	0.10		
ddd	0.05		
eee	0.08		
fff	0.10		

JEITA Package Code	RENESAS Code	MASS(Typ.)[g]
P-HWQFN32-5×5-0.50	PWQN0032KG-A	0.06

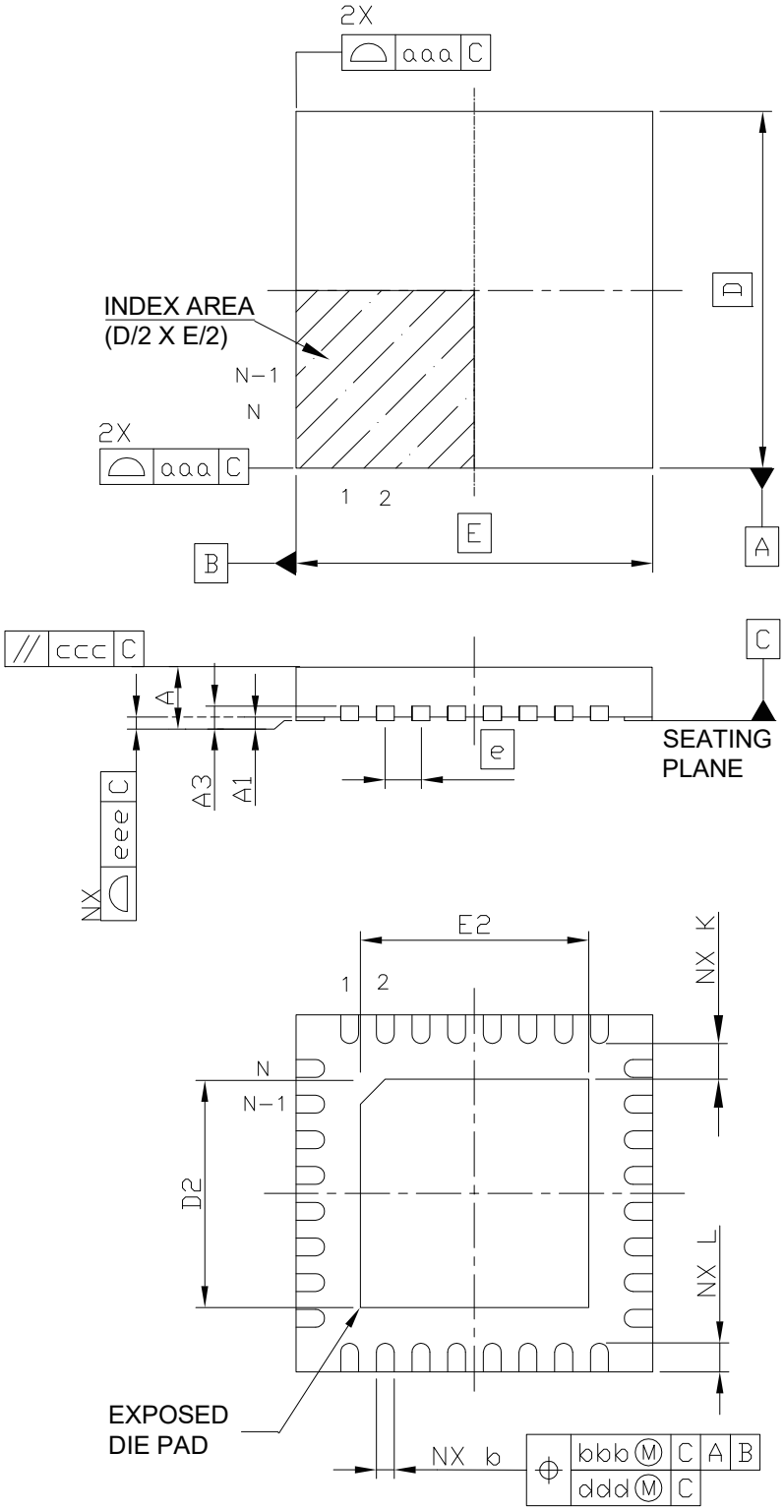

Reference Symbol	Dimension in Millimeters		
	Min.	Nom.	Max.
A	—	—	0.80
A_1	0.00	—	0.05
A_3	0.20 REF.		
b	0.20	0.25	0.30
D	—	5.00	—
E	—	5.00	—
e	—	0.50	—
N	32		
L	0.30	0.40	0.50
K	0.20	—	—
D_2	3.10	3.20	3.30
E_2	3.10	3.20	3.30
aaa	—	—	0.15
bbb	—	—	0.10
ccc	—	—	0.10
ddd	—	—	0.05
eee	—	—	0.08

JEITA Package Code	RENESAS Code	Previous Code	MASS (TYP.) [g]
P-LQFP32-7x7-0.80	PLQP0032GB-A	P32GA-80-GBT-1	0.2

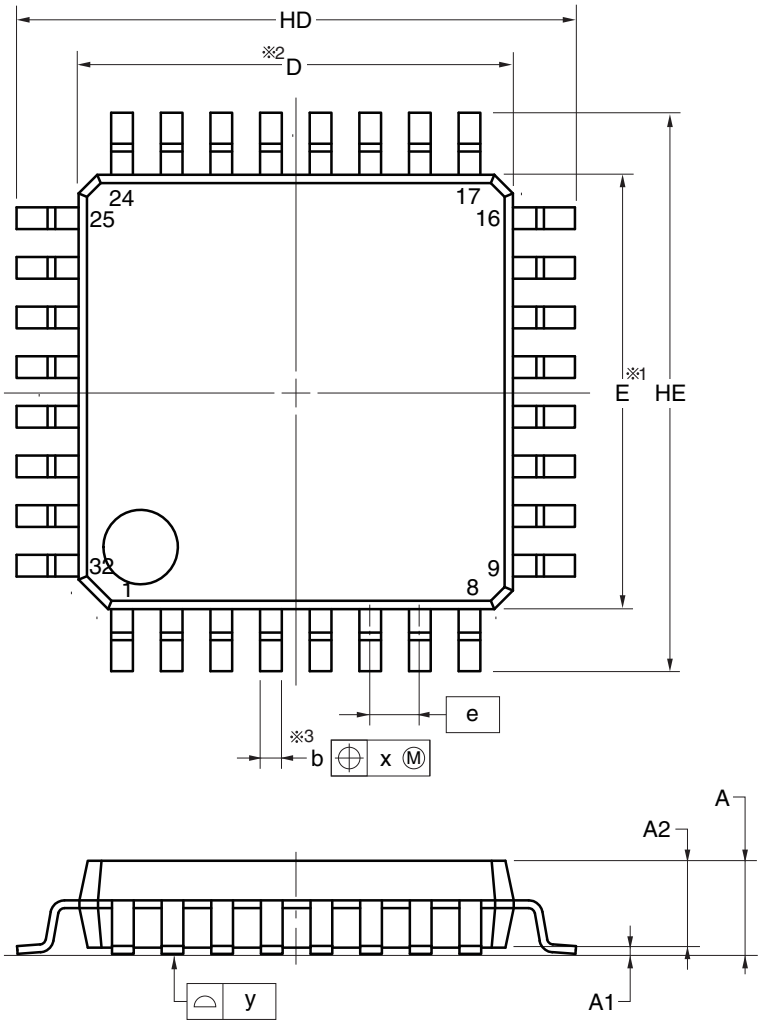

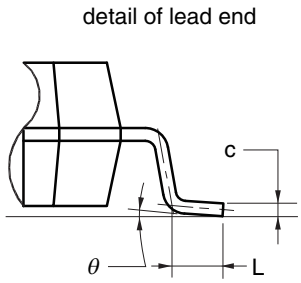

(UNIT:mm)

ITEM	DIMENSIONS
D	7.00±0.10
E	7.00±0.10
HD	9.00±0.20
HE	9.00±0.20
A	1.70 MAX.
A1	0.10±0.10
A2	1.40
b	0.37±0.05
c	0.145±0.055
L	0.50±0.20
θ	0° to 8°
e	0.80
x	0.20
y	0.10

NOTE

1.Dimensions "※1" and "※2" do not include mold flash.

2.Dimension "※3" does not include trim offset.

JEITA Package code	RENESAS code	MASS(TYP.)[g]
P-LQFP32-7x7-0.80	PLQP0032GE-A	0.18

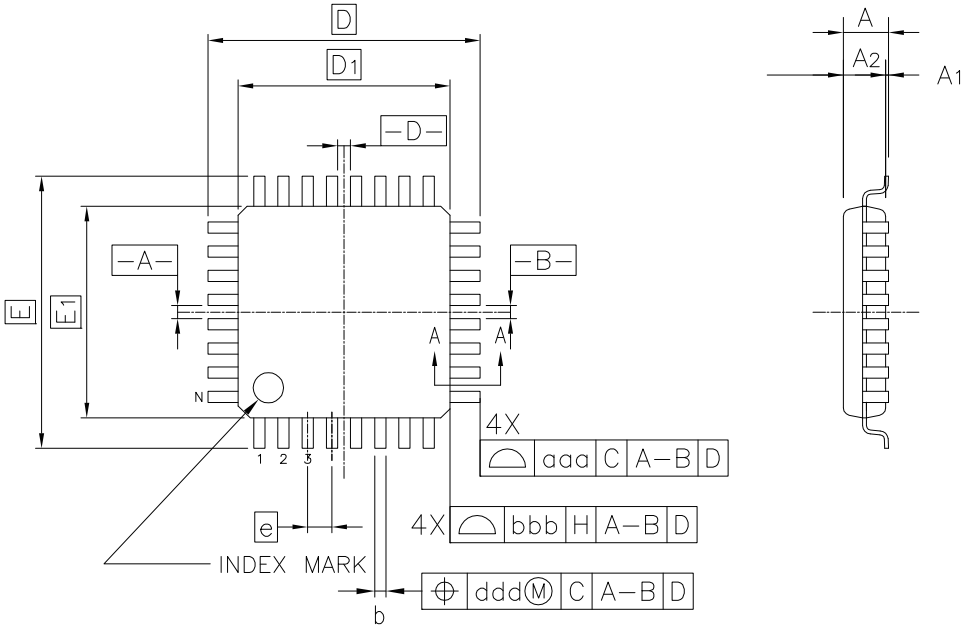

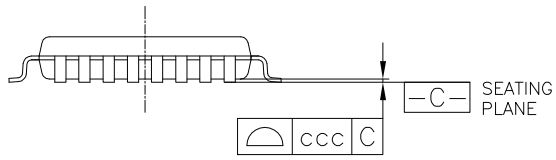

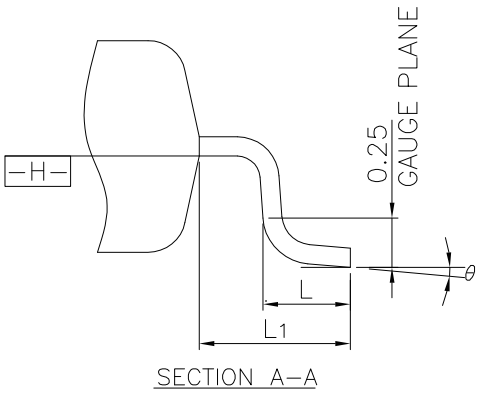

Reference Symbol	Dimension in Millimeters		
	Min.	Nom.	Max.
A	–	–	1.60
A_1	0.05	–	0.15
A_2	1.35	1.40	1.45
D	–	9.00	–
D_1	–	7.00	–
E	–	9.00	–
E_1	–	7.00	–
N	–	32	–
e	–	0.80	–
b	0.30	0.37	0.45
c	0.09	–	0.20
θ	0°	3.5°	7°
L	0.45	0.60	0.75
L_1	–	1.00	–
aaa	–	–	0.20
bbb	–	–	0.20
ccc	–	–	0.10
ddd	–	–	0.20

39.3 36-pin products

JEITA Package Code	RENESAS Code	Previous Code	MASS (TYP.) [g]
P-WFLGA36-4x4-0.50	PWLG0036KA-A	P36FC-50-AA4-2	0.023

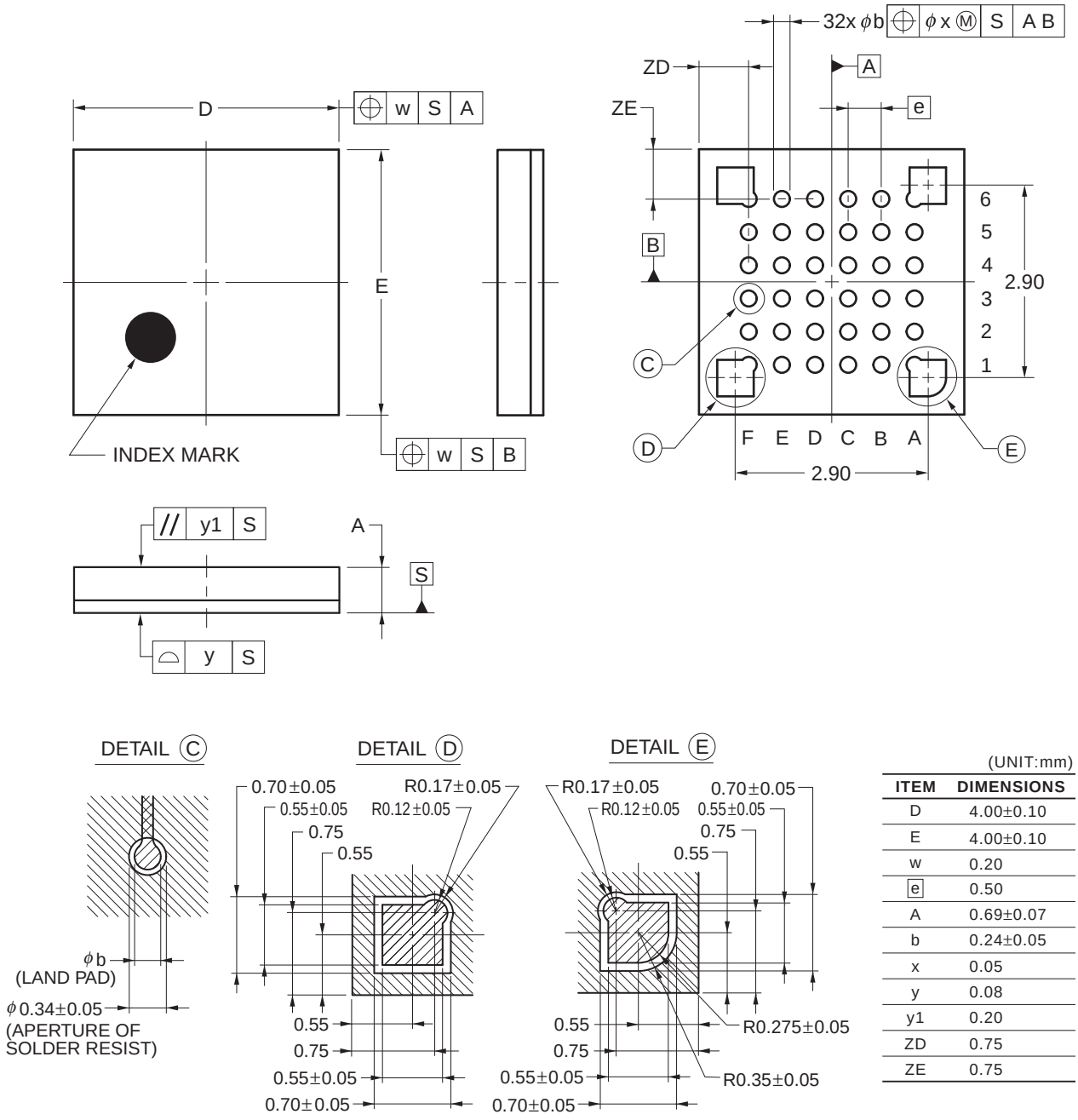

(UNIT:mm)

ITEM	DIMENSIONS
D	4.00±0.10
E	4.00±0.10
w	0.20
e	0.50
A	0.69±0.07
b	0.24±0.05
x	0.05
y	0.08
y1	0.20
ZD	0.75
ZE	0.75

39.4 48-pin products

JEITA Package Code	RENESAS Code	Previous Code	MASS (Typ) [g]
P-LFQFP48-7x7-0.50	PLQP0048KB-B	—	0.2

Unit: mm

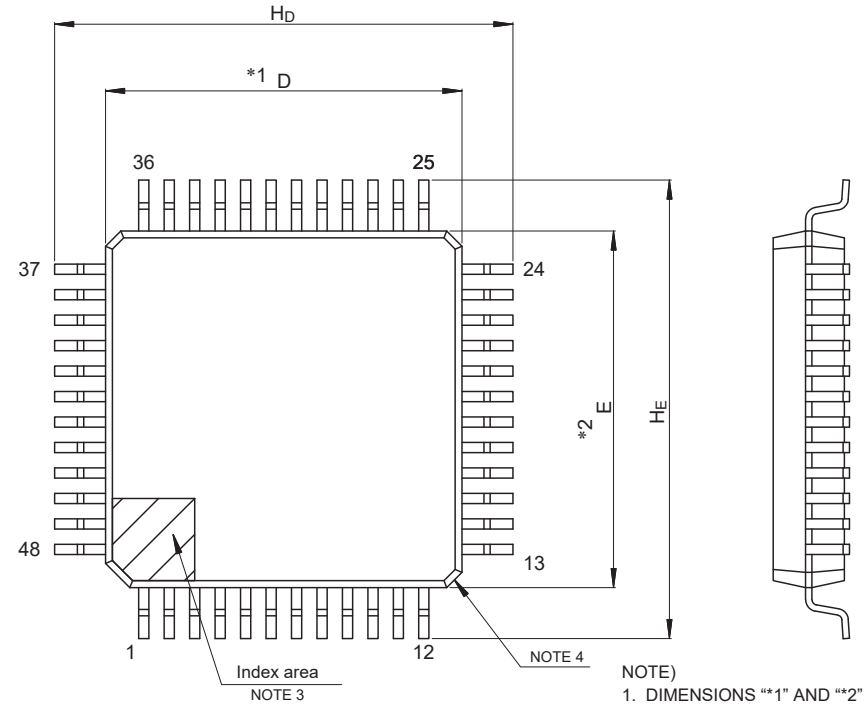

NOTE)
1. DIMENSIONS "*1" AND "*2" DO NOT INCLUDE MOLD FLASH.
2. DIMENSION "*3" DOES NOT INCLUDE TRIM OFFSET.
3. PIN 1 VISUAL INDEX FEATURE MAY VARY, BUT MUST BE LOCATED WITHIN THE HATCHED AREA.
4. CHAMFERS AT CORNERS ARE OPTIONAL, SIZE MAY VARY.

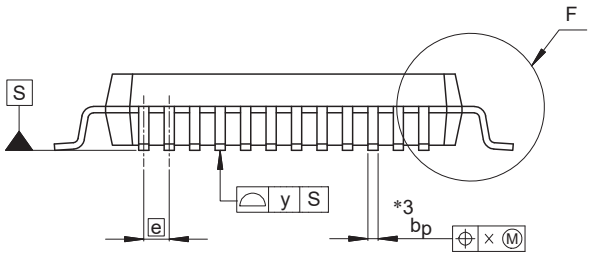

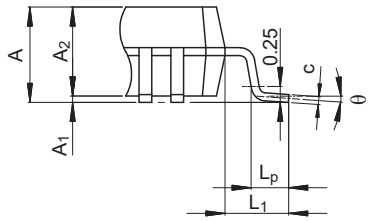

Detail F

Reference Symbol	Dimensions in millimeters		
	Min	Nom	Max
D	6.9	7.0	7.1
E	6.9	7.0	7.1
A_2	—	1.4	—
H_D	8.8	9.0	9.2
H_E	8.8	9.0	9.2
A	—	—	1.7
A_1	0.05	—	0.15
b_p	0.17	0.20	0.27
c	0.09	—	0.20
θ	0°	3.5°	8°
e	—	0.5	—
x	—	—	0.08
y	—	—	0.08
L_p	0.45	0.6	0.75
L_1	—	1.0	—

© 2015 Renesas Electronics Corporation. All rights reserved.

JEITA Package code	RENESAS code	MASS(TYP.)[g]
P-LFQFP48-7x7-0.50	PLQP0048KL-A	0.18

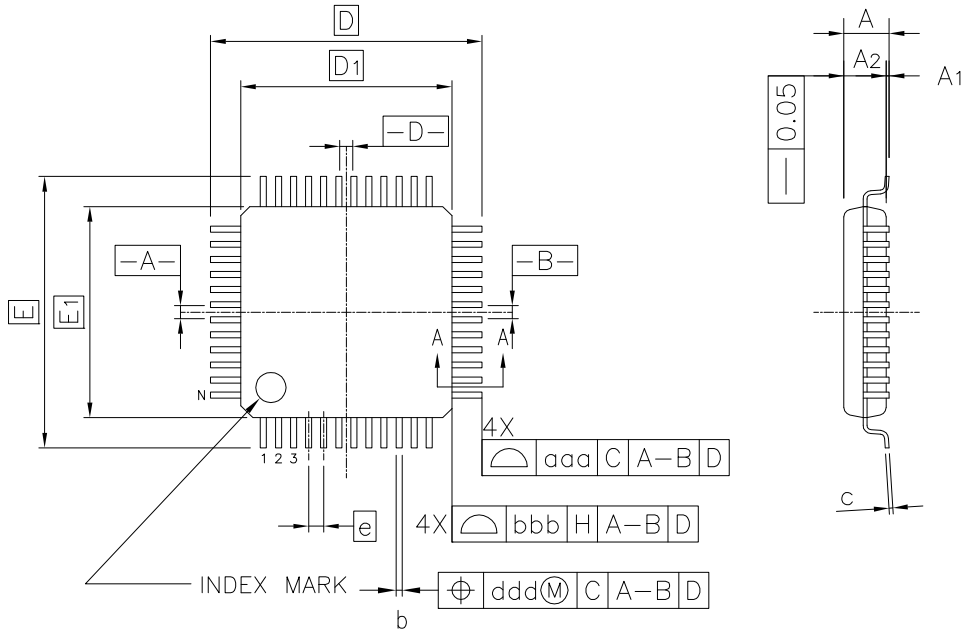

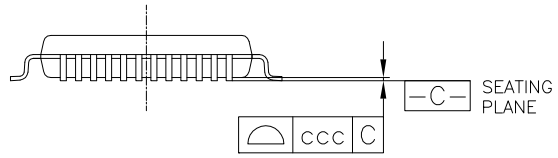

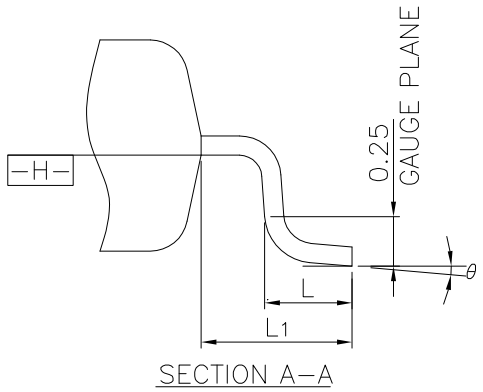

Reference Symbol	Dimension in Millimeters		
	Min.	Nom.	Max.
A	–	–	1.60
A_1	0.05	–	0.15
A_2	1.35	1.40	1.45
D	–	9.00	–
D_1	–	7.00	–
E	–	9.00	–
E_1	–	7.00	–
N	–	48	–
e	–	0.50	–
b	0.17	0.22	0.27
c	0.09	–	0.20
θ	0°	3.5°	7°
L	0.45	0.60	0.75
L_1	–	1.00	–
aaa	–	–	0.20
bbb	–	–	0.20
ccc	–	–	0.08
ddd	–	–	0.08

39.5 64-pin products

JEITA Package Code	RENESAS Code	Previous Code	MASS (Typ) [g]
P-LFQFP64-10x10-0.50	PLQP0064KB-C	—	0.3

Unit: mm

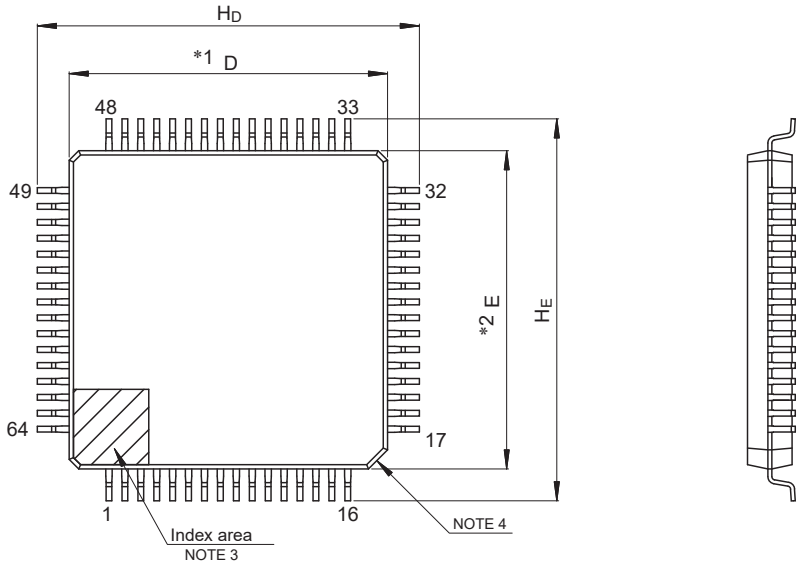

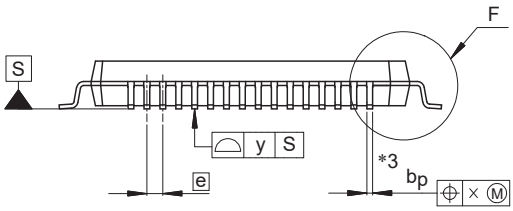

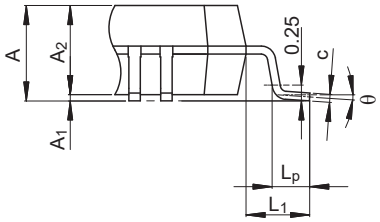

Detail F

NOTE)
1. DIMENSIONS "*1" AND "*2" DO NOT INCLUDE MOLD FLASH.
2. DIMENSION "*3" DOES NOT INCLUDE TRIM OFFSET.
3. PIN 1 VISUAL INDEX FEATURE MAY VARY, BUT MUST BE LOCATED WITHIN THE HATCHED AREA.
4. CHAMFERS AT CORNERS ARE OPTIONAL, SIZE MAY VARY.

Reference Symbol	Dimensions in millimeters		
	Min	Nom	Max
D	9.9	10.0	10.1
E	9.9	10.0	10.1
A_2	—	1.4	—
H_D	11.8	12.0	12.2
H_E	11.8	12.0	12.2
A	—	—	1.7
A_1	0.05	—	0.15
b_p	0.15	0.20	0.27
c	0.09	—	0.20
θ	0°	3.5°	8°
e	—	0.5	—
x	—	—	0.08
y	—	—	0.08
L_p	0.45	0.6	0.75
L_1	—	1.0	—

© 2015 Renesas Electronics Corporation. All rights reserved.

JEITA Package code	RENESAS code	MASS(TYP.)[g]
P-LFQFP064-10x10-0.50	PLQP0064KL-A	0.36

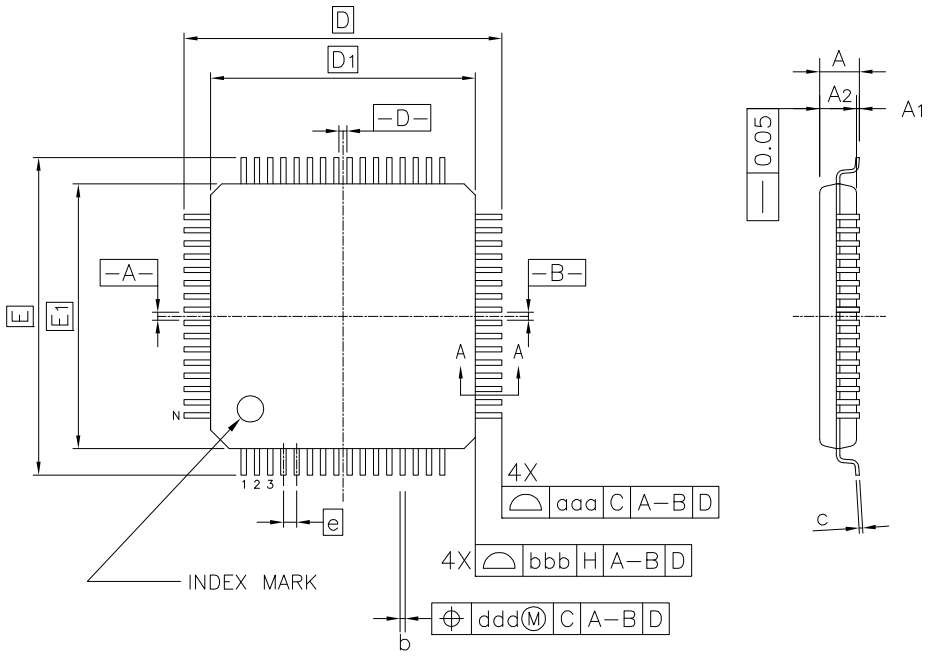

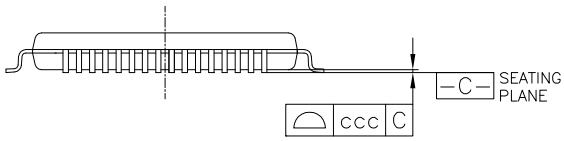

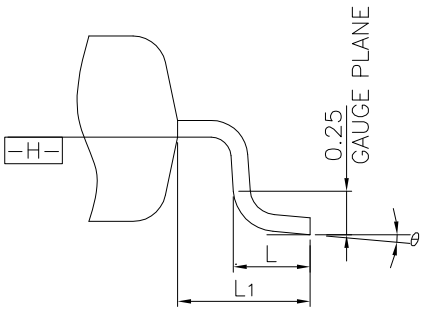

SECTION A–A

Reference Symbol	Dimension in Millimeters		
	Min.	Nom.	Max.
A	–	–	1.60
A_1	0.05	–	0.15
A_2	1.35	1.40	1.45
D	–	12.00	–
D_1	–	10.00	–
E	–	12.00	–
E_1	–	10.00	–
N	–	64	–
e	–	0.50	–
b	0.17	0.22	0.27
c	0.09	–	0.20
θ	0°	3.5°	7°
L	0.45	0.60	0.75
L_1	–	1.00	–
aaa	–	–	0.20
bbb	–	–	0.20
ccc	–	–	0.08
ddd	–	–	0.08

APPENDIX A REVISION HISTORY

A.1 Major Revisions in This Edition

Page	Description	Classification
CHAPTER 1 OUTLINE		
p.4	Modification of Figure 1 - 1 Part Number, Memory Size, and Package of RL78/G1F	(d)
p.5	Modification of Table 1 - 1 List of Ordering Part Numbers	(d)
CHAPTER 4 PORT FUNCTIONS		
p.118	Modification of Note 1 in Figure 4 - 5 Format of Port output mode register	(c)
p.118	Modification of Note 2 in Figure 4 - 5 Format of Port output mode register	(c)
p.121	Modification of Figure 4 - 7 Format of Peripheral I/O redirection register 0 (PIOR0)	(c)
p.125	Modification of Figure 4 - 11 Assignment of the redirect function when using UATR2 or IrDA	(c)
p.134	Modification of Table 4 - 8 Setting Examples of Registers When Using P00 to P17 Pin Function (64-pin Products) (1/4)	(c)
CHAPTER 6 TIMER ARRAY UNIT		
p.222	Modification of Figure 6 - 19 Format of Timer channel stop register m (TTm)	(c)
CHAPTER 11 REAL-TIME CLOCK		
p.518	Addition of Note 1 and 2 in Figure 11 - 6 Format of Real-time clock control register 1 (RTCC1) (2/2)	(c)
CHAPTER 14 WATCHDOG TIMER		
p.556	Addition of Note in Table 14 - 3 Setting of Overflow Time of Watchdog Timer	(c)
p.558	Addition of Note in Table 14 - 4 Setting Window Open Period of Watchdog Timer	(c)
CHAPTER 19 SERIAL ARRAY UNIT		
p.680	Deletion of Caution in 19.3.12 Serial output register m (SOm)	(c)
p.680	Modification of Figure 19 - 19 Format of Serial output register m (SOm)	(c)
p.680	Modification of Cauiton in Figure 19 - 19 Format of Serial output register m (SOm)	(c)
CHAPTER 30 SAFETY FUNCTIONS		
p.1051	Modification of 30.1 Overview of Safety Functions	(c)
p.1051	Modification of Remark in 30.1 Overview of Safety Functions	(c)
p.1056	Modification of 30.3.2 CRC operation function (general-purpose CRC)	(c)
p.1061	Modification of 30.3.4 RAM guard function	(c)
p.1062	Modification of 30.3.5 SFR guard function	(c)

Remark “Classification” in the above table classifies revisions as follows.
(a): Error correction, (b): Addition/change of specifications, (c): Addition/change of description or note,(d): Addition/change of package, part number, or management division, (e): Addition/change of related documents

A.2 Revision History of Preceding Editions

Here is the revision history of the preceding editions. Chapter indicates the chapter of each edition.

(1/8)

Edition	Description	Chapter
Rev. 1.20	Modification of description in Figure 11-6 Format of Real-time clock control register 1 (RTCC1) (2/2)	**CHAPTER 11 REAL-TIME CLOCK**
	Modification of Caution in Figure 11-22 Procedure for Reading Real-time Clock	
	Modification of Caution 1 in Figure 11-23 Procedure for Writing Real-time Clock	
	Modification of description of Note 1 and 4 in 37.3.2 Supply current characteristics (T_A = -40 to +85°C, 1.6 V ≤ EV_{DD0} ≤ V_{DD} ≤ 5.5 V, V_{SS} = EV_{SS0} = 0 V) (1/2)	**CHAPTER 37 ELECTRICAL SPECIFICATIONS (T_A = -40 to +85°C)**
	Modification of Note 1 and 5, deletion of Note 6 in 37.3.2 Supply current characteristics (T_A = -40 to +85°C, 1.6 V ≤ EV_{DD0} ≤ V_{DD} ≤ 5.5 V, V_{SS} = EV_{SS0} = 0 V) (2/2)	
	Modification of description of Note 1 and 4 in 38.3.2 Supply current characteristics (T_A = -40 to +105°C, 2.4 V ≤ EV_{DD0} ≤ V_{DD} ≤ 5.5 V, V_{SS} = EV_{SS0} = 0 V) (1/2)	**CHAPTER 38 ELECTRICAL SPECIFICATIONS (G: T_A = -40 to +105°C)**
	Modification of Note 1 and 5, deletion of Note 6 in 38.3.2 Supply current characteristics (T_A = -40 to +105°C, 2.4 V ≤ EV_{DD0} ≤ V_{DD} ≤ 5.5 V, V_{SS} = EV_{SS0} = 0 V) (2/2)	
	Modification of package drawing of PWQN0032KG-A in 39.2 32-pin products	**CHAPTER 39 PACKAGE DRAWINGS**
Rev. 1.13	"3-Wire Serial I/O" and "3-wire serial" were modified to " Simplified SPI"	**All**
	The module name for CSI was changed to Simplified SPI	
	"wait" for IIC was modified to "clock stretch"	
	Addition of Note 1 in 1 Features	**CHAPTER 1 OUTLINE**
	Modification of Table 1-1 List of Ordering Part Numbers	
	Addition of Note in 4.4.5 Handling different potential (1.8 V, 2.5 V, 3 V) by using I/O buffers	**CHAPTER 4 PORT FUNCTIONS**
	Addition of Note in CHAPTER 19 SERIAL ARRAY UNIT	**CHAPTER 19 SERIAL ARRAY UNIT**
	Addition of package drawing of PWQN0024KH-A in 39.1 24-pin products	**CHAPTER 39 PACKAGE DRAWINGS**
	Addition of package drawing of PWQN0032KG-A, PLQP0032GE-A in 39.2 32-pin products	
	Addition of package drawing of PLQP0048KL-A in 39.4 48-pin products	
	Addition of package drawing of PLQP0064KL-A in 39.5 64-pin products	
Rev. 1.12	Modification of **Table 1 - 1 List of Ordering Part Numbers**	**CHAPTER 1 OUTLINE**
	Addition of 32-pin plastic HWQFN (5 × 5 mm, 0.5-mm pitch) in **1.3.2 32-pin products**	
	Addition of package drawing of PWQN0032KE-A in **39.2 32-pin products**	**CHAPTER 39 PACKAGE DRAWINGS**
Rev. 1.11	Modification of **Figure 1-1 Part Number, Memory Size, and Package of RL78/G1F**	**CHAPTER 1 OUTLINE**
	Addition of title and modification of description in **Table 1-1 List of Ordering Part Numbers**	
	Addition and modification of all in **CHAPTER 39 PACKAGE DRAWINGS**	**CHAPTER 39 PACKAGE DRAWINGS**

(2/8)

Edition	Description	Chapter
Rev. 1.10	Addition of product name (RL78/G1F) and description (Top View) in **1.3.1 24-pin products**	**CHAPTER 1 OUTLINE**
	Addition of product name (RL78/G1F) and description (Top View) in **1.3.2 32-pin products**	
	Addition of product name (RL78/G1F) and description (Top View) in **1.3.4 48-pin products**	
	Addition of product name (RL78/G1F) and description (Top View) in **1.3.5 64-pin products**	
	Addition of caution in **Figure 2 - 10 Pin Block Diagram of Pin Type 7-1-4**	**CHAPTER 2 PIN FUNCTIONS**
	Addition of caution in **Figure 2 - 12 Pin Block Diagram of Pin Type 7-1-8**	
	Addition of caution in **Figure 2 - 17 Pin Block Diagram of Pin Type 7-9-2**	
	Addition of caution in **Figure 2 - 18 Pin Block Diagram of Pin Type 8-1-3**	
	Addition of cautions 1 and 2 in **Figure 2 - 19 Pin Block Diagram of Pin Type 8-1-4**	
	Addition of caution in **Figure 2 - 20 Pin Block Diagram of Pin Type 8-1-7**	
	Addition of cautions 1 and 2 in **Figure 2 - 21 Pin Block Diagram of Pin Type 8-1-8**	
	Addition of cautions 1 and 2 in **Figure 2 - 22 Pin Block Diagram of Pin Type 8-3-8**	
	Addition of caution in **Figure 2 - 23 Pin Block Diagram of Pin Type 8-9-1**	
	Addition of cautions 1 and 2 in **Figure 2 - 24 Pin Block Diagram of Pin Type 8-9-2**	
	Modification of note 1 in **Figure 3 - 1 Memory Map (R5F11BxC (x = 7, B, C, G, L))**	**CHAPTER 3 CPU ARCHITECTURE**
	Modification of note 1 in **Figure 3 - 2 Memory Map (R5F11BxE (x = 7, B, C, G, L))**	
	Modification of vector table addresses in **Tables 3 - 3** and **3 – 4 Vector Table**	
	Modification of the addresses (00000H and 00001H) in (1) Program counter (PC) of **3.3.1 Control registers**	
	Addition of F0139H in **Table 3-12 Extended Special Function Register (2nd SFR) List (3/8)**	
	Addition of remark 2 in (1) X1 oscillation of **5.7 Resonator and Oscillator Constants**	**CHAPTER 5 CLOCK GENERATOR**
	Addition of note 2 in **Figure 6 - 14 Format of Timer mode register mn (TMRmn) (3/4)**	**CHAPTER 6 TIMER ARRAY UNIT**

(3/8)

Edition	Description	Chapter
Rev. 1.10	Addition of f_{HOCO} in **Figure 8 - 1 Timer RD Block Diagram**	**CHAPTER 8 TIMER RD**
	Addition of note 2 to TOA1 and TOA0 bits in **Figure 8 - 10 Format of Timer RD output control register (TRDOCR) [Output Compare Function]**	
	Addition of note 2 to TOA1 and TOA0 bits and modification of description for TOC0 bit in **Figure 8 - 11 Format of Timer RD output control register (TRDOCR) [PWM Function]**	
	Addition of **Figure 8 - 12 Format of Timer RD output control register (TRDOCR) [Reset Synchronous PWM Mode, Complementary PWM Mode]**	
	Addition of note 2 to TOA0 bit in **Figure 8 - 13 Format of Timer RD output control register (TRDOCR) [PWM3 Mode]**	
	Addition of description of TRDCR1 in **Figure 8 - 19 Format of Timer RD control register i (TRDCRi)(i=0,1)[Complementary PWM Mode]**	
	Deletion of description of TRD1 register in **Figure 8 - 32 Format of Timer RD counter 0 (TRD0) [Reset Synchronous PWM Mode and PWM3 Mode]**	
	Deletion of description of TRD1 register in **Figure 8 - 33 Format of Timer RD counter 0 (TRD0) [Complementary PWM Mode (TRD0)]**	
	Deletion of description of TRD0 register in **Figure 8 - 34 Format of Timer RD counter 1 (TRD1) [Complementary PWM Mode (TRD1)]**	
	Modification of **Figure 8 - 57 Block Diagram of Reset Synchronous PWM Mode (For Timer RD0)**	
	Modification of **Figure 8 - 59 Block Diagram of Complementary PWM Mode (For Timer RD0)**	
	Modification of the title and **Table 8 - 20 Functional difference between pulse forced cutoff and output forced cutoff**	
	Modification of description in **8.8.3 Operation**	
	Modification of description in **Figure 8 - 75 Operation example of output forced cutoff or output forced cutoff release by hardware (an example of cutoff of TRDIOB0, TRDIOC0, and TRDIOD0 pins)**	
	Modification of description in **Figure 8 - 76 Cutoff detailed timing diagram and notes 1 and 2**	
	Modification of description in **Figure 8 - 77 Cutoff release detailed timing diagram (timer RD count source = f_{CLK}) and notes 1 and 2**	
	Modification of description in **Figure 8 - 78 Cutoff release detailed timing diagram (timer RD count source = $f_{CLK}/2$) and notes 1 and 2**	
	Modification of description in **Figure 8 - 79 Operation example of hardware cutoff release function (an example of TRDIOB0 and TRDIOD0)**	
	Modification of description in **Figure 8 - 80 Cutoff release detailed timing diagram (timer RD count source = f_{CLK}, timer RD decremented) and notes 1 and 2**	
	Modification of description in **Figure 8 - 81 Cutoff release detailed timing diagram (timer RD count source = f_{CLK}, timer RD count = TRDGRA0) and notes 1 and 2**	
	Modification of description in **Figure 8 - 82 Cutoff release detailed timing diagram (timer RD count source = $f_{CLK}/2$, timer RD decremented) and notes 1 and 2**	
	Modification of description in **Figure 8 - 83 Cutoff release detailed timing diagram (timer RD count source = $f_{CLK}/2$, timer RD count = TRDGRA0) and notes 1 and 2**	
	Modification of description in **Figure 8 - 84 Operation example of cutoff release by software (an example of TRDIOB0, TRDIOC0, and TRDIOD0)**	
	Modification of description in **Figure 8 - 85 Cutoff release detailed timing diagram**	
	Modification of description in **Figure 8 - 86 Operation example of cutoff release by software (timer RD, 2-channel count)**	

(4/8)

Edition	Description	Chapter
Rev. 1.10	Modification of description in **Figure 8 - 87 Operation example of cutoff release by software (timer RD, 1-channel count)**	**CHAPTER 8 TIMER RD**
	Modification of description in **Figure 8 - 88 Operation example of output cutoff release by software and <1> and <3>**	
	Modification of description in **Figure 8 - 89 Operation example of cutoff release by software (an example of TRDIOB0 and TRDIOD0)**	
	Modification of description in **Figure 8 - 91 Judgment timing for count value = 0000H (timer RD count starts when count value = 0000H)**	
	Modification of description in **Figure 8 - 92 Judgment timing for count value = 0000H (count value becomes 0000H while counting with count source = operating clock)**	
	Modification of description in **Figure 8 - 93 Judgment timing for count value = 0000H (count value becomes 0000H while counting with count source = operating clock/2)**	
	Modification of description in **Figure 8 - 94 Judgment timing for count value = 0000H (count source = operating clock, count stops simultaneously when timer RD counter value becomes 0000H)**	
	Modification of description in **Figure 8 - 95 Judgment timing for count value = 0000H (count source = f_{CLK}/2, count stops simultaneously when timer RD counter value becomes 0000H)**	
	Modification of description in **Figure 8 - 96 Judgment timing for count value = 0000H (count source = operating clock/2, count stops at the next timing after timer RD counter value becomes 0000H)**	
	Modification of **Figure 15 - 4 Timing Chart When A/D Voltage Comparator Is Used**	**CHAPTER 15 A/D CONVERTER**
	Modification of **Figure 15 - 19 Example of Software Trigger Mode (Select Mode, Sequential Conversion Mode) Operation Timing**	
	Modification of **Figure 15 - 20 Example of Software Trigger Mode (Select Mode, One-Shot Conversion Mode) Operation Timing**	
	Modification of **Figure 15 - 21 Example of Software Trigger Mode (Scan Mode, Sequential Conversion Mode) Operation Timing**	
	Modification of **Figure 15 - 22 Example of Software Trigger Mode (Scan Mode, One-Shot Conversion Mode) Operation Timing**	
	Modification of **Figure 15 - 23 Example of Hardware Trigger No-Wait Mode (Select Mode, Sequential Conversion Mode) Operation**	
	Modification of **Figure 15 - 24 Example of Hardware Trigger No-Wait Mode (Select Mode, One-Shot Conversion Mode) Operation**	
	Modification of **Figure 15 - 25 Example of Hardware Trigger No-Wait Mode (Scan Mode, Sequential Conversion Mode) Operation Timing**	
	Modification of **Figure 15 - 26 Example of Hardware Trigger No-Wait Mode (Scan Mode, One-Shot Conversion Mode) Operation Timing**	
	Modification of **Figure 15 - 27 Example of Hardware Trigger Wait Mode (Select Mode, Sequential Conversion Mode) Operation Timing**	
	Modification of **Figure 15 - 28 Example of Hardware Trigger Wait Mode (Select Mode, One-Shot Conversion Mode) Operation Timing**	
	Modification of **Figure 15 - 29 Example of Hardware Trigger Wait Mode (Scan Mode, Sequential Conversion Mode) Operation Timing**	
	Modification of description in **Figure 15 - 30 Example of Hardware Trigger Wait Mode (Scan Mode, One-Shot Conversion Mode) Operation Timing**	

(5/8)

Edition	Description	Chapter
Rev. 1.10	Modification of description in **Figure 15 - 31 Setting up Software Trigger Mode**	**CHAPTER 15 A/D CONVERTER**
	Modification of description in **Figure 15 - 32 Setting up Hardware Trigger No-Wait Mode**	
	Modification of description in **Figure 15 - 34 Setup when temperature sensor output voltage/internal reference voltage is selected**	
	Modification of description in **Figure 15 - 35 Setting up Test Mode**	
	Modification of description in **Table 17 - 1 CMP Function Overv**iew	**CHAPTER 17 COMPARATOR (CMP)**
	Modification of description in **19.1.2 UART (UART0 to UART2)**	**CHAPTER 19 SERIAL ARRAY UNIT**
	Modification of **Figure 19 - 75 Flowchart of SNOOZE Mode Operation (once startup)**	
	Modification of **Figure 19 - 77 Flowchart of SNOOZE Mode Operation (continuous startup)**	
	Modification of description in **19.7.3 SNOOZE mode function**	
	Modification of **Figure 19 - 125 Flowchart of SNOOZE Mode Operation (EOCm1 = 0, SSECm = 0/1 or EOCm1 = 1, SSECm = 0)**	
	Modification of **Figure 19 - 127 Flowchart of SNOOZE Mode Operation (EOCm1 = 1, SSECm = 1)**	
	Modification of description for PRSn bit in **Figure 20 - 15 Format of IICA control register n1 (IICCTLn1) (2/2)**	**CHAPTER 20 SERIAL INTERFACE IICA**
	Addition of description in **CHAPTER 22 DATA TRANSFER CONTROLLER (DTC)**	**CHAPTER 22 DATA TRANSFER CONTROLLER (DTC)**
	Modification of vector table addresses in **Tables 24 – 1** to **24 - 3 Interrupt Source List**	**CHAPTER 24 INTERRUPT FUNCTIONS**
	Modification of description in **Tables 26 – 1** and **26 -2 Operating Statuses in HALT Mode**	**CHAPTER 26 STANDBY FUNCTION**
	Modification of addresses (00000H and 00001H)	**CHAPTER 27 RESET FUNCTION**
	Modification of addresses (00000H, 00001H) in **Table 27 - 2 Hardware Statuses After Reset Acknowledgment**	
	Addition of note in **34.1 On-Chip Debug Security ID**	**CHAPTER 34 ON-CHIP DEBUG FUNCTION**
Rev. 1.00	Modification of the unit symbol (**PWMOP into PWMOPA**)	Throughout
	Modification of descriptions in **1.1 Features**	**CHAPTER 1 OUTLINE**
	Modification of **1.4 Pin Identification**	
	Modification of **1.6 Outline of Functions**	
	Modification of **caution 7** in **Figure 5 - 2 Format of Clock operation mode control register (CMC)**	**CHAPTER 5 CLOCK GENERATOR**
	Modification of **caution** in **Figure 5 - 17 Example of External Circuit of XT1 Oscillator**	
	Modification of **(1) X1 oscillation in 5.7 Resonator and Oscillator Constants**	
	Deletion of **(2) XT1 oscillation (crystal resonator)** in **5.7 Resonator and Oscillator Constants**	
	Modification of **Figure 6 - 1 Entire Configuration** of **Timer Array Unit 0**	**CHAPTER 6 TIMER ARRAY UNIT**
	Modification of **Figure 6 - 2 Internal Block Diagram of Channel 0** of **Timer Array Unit 0**	

(6/8)

Edition	Description	Chapter
Rev. 1.00	Modification of descriptions in **8.2 Configuration of Timer RD**	**CHAPTER 8 TIMER RD**
	Modification of **Figure 8 - 1 Timer RD Block Diagram**	
	Modification of **Figure 8 - 27 Format of Timer RD status register 1 (TRDSR1) [Functions Other Than Input Capture Function]**	
	Modification of **Figure 8 - 32 Format of Timer RD counter i (TRDi) (i = 0 or 1) [Complementary PWM Mode (TRD0)]]**	
	Modification of **Figure 8 - 49 Block Diagram of Output Compare Function (For Timer RD0)**	
	Modification of **Figure 8 - 53 Block Diagram of PWM Function (For Timer RD0)**	
	Modification of **Figure 8 - 56 Block Diagram of Reset Synchronous PWM Mode (For Timer RD0)**	**CHAPTER 8 TIMER RD**
	Modification of **Figure 8 - 58 Block Diagram of Complementary PWM Mode (For Timer RD0)**	
	Modification of **Figure 8 - 61 Block Diagram of PWM3 Mode (For Timer RD0)**	
	Modification of descriptions in **8.8 PWM Option Unit (PWMOPA)**	
	Modification of descriptions in **Table 8 - 20 Functional difference between pulse forced cutoff and output forced cutoff**	
	Deletion of **Figure 8 - 68 PWMOP control logic Block Diagram**	
	Modification of **Figure 10 - 5 Format of Timer RX Function Control Register 1 (TRXCR1)**	**CHAPTER 10 TIMER RX**
	Modification of **caution** in **Figure 10 - 5 Format of Timer RX Function Control Register 1 (TRXCR1)**	
	Modification of descriptions in **10.4.1 Count source**	
	Modification of **Figure 10 - 11 Operation example of stopping timer RX counting by a trigger from comparator 1**	
	Modification of **Figure 10 - 12 Operation example of input capture**	
	Modification of **Figure 10 - 13 Operation example of input capture (to reset count value at the same time)**	
	Modification of T**able 17 - 1 CMP Function Overview**	**CHAPTER 17 COMPARATOR (CMP)**
	Modification of **Figure 17 - 1 Comparator 0 Block Diagram**	
	Modification of **Figure 17 - 2 Comparator 1 Block Diagram**	
	Modification of descriptions in **17.3.7 Comparator 0 input signal selection control register (CMPSEL0)**	
	Modification of **Figure 17 - 9 Comparator 0 Input Signal Selection Control Register (CMPSEL0)**	
	Modification of descriptions in **17.3.8 Comparator 1 input signal selection control register (CMPSEL1)**	
	Modification of **Figure 17 - 10 Comparator 1 Input Signal Selection Control Register (CMPSEL1)**	
	Modification of **Figure 17 - 12 Configuration of Comparator i Digital Filter and Edge Detection**	
	Modification of descriptions in **PROGRAMMABLE GAIN AMPLIFIER (PGA)**	**CHAPTER 18 PROGRAMMABLE GAIN AMPLIFIER (PGA)**
	Modification of descriptions in **18.1 Functions of Programmable Gain Amplifier**	
	Modification of **Figure 18 - 1 Block Diagram of Programmable Gain Amplifier**	
	Modification of descriptions in **18.4 Operation of Programmable Gain Amplifier**	
	Modification of descriptions in **PROGRAMMABLE GAIN AMPLIFIER (PGA)**	

(7/8)

Edition	Description	Chapter
Rev. 1.00	Modification of descriptions in **Table 22 - 1 DTC Specifications**	**CHAPTER 22 DATA TRANSFER CONTROLLER (DTC)**
	Modification of **Figure 23 - 2 Format of Event output destination select register n (ELSELRn)**	**CHAPTER 23 EVENT LINK CONTROLLER (ELC)**
	Modification of **37.6.5 PGA**	**CHAPTER 37 ELECTRICAL SPECIFICATIONS (TA = -40 to +85°C)**
	Modification **of 38.6.5 PGA**	**CHAPTER 38 ELECTRICAL SPECIFICATIONS (G: TA = -40 to +105°C)**
Rev. 0.50	Modification of description in **Figure 1 - 1 Part Number, Memory Size, and Package of RL78/G1F**	**CHAPTER 1 OUTLINE**
	Addition of description in **1.4 Pin Identification**	
	Modification of description in **1.5 Block Diagram**	
	Modification of description in **1.6 Outline of Functions**	
	Correction of error in figures 2 - 5 to 2 - 8	**CHAPTER 2 PIN FUNCTIONS**
	Addition of description in **3.1 Overview**	**CHAPTER 3 CPU ARCHITECTURE**
	Addition of caution 1 to figure 3 - 1	
	Addition of caution 1 to figure 3 - 2	
	Addition of caution 4 in **3.2.3 Internal data memory space**	
	Correction of error in table 3 - 10	
	Modification of notes 1 and 2 of figure 4 - 5	**CHAPTER 4 PORT FUNCTIONS**
	Addition of description to figure 6 - 12	**CHAPTER 6 TIMER ARRAY UNIT**
	Modification of caution in **6.9.1 Operation as one-shot pulse output function**	
	Modification of **Figure 8 - 1 Timer RD Block Diagram**	**CHAPTER 8 TIMER RD**
	Modification of **Figure 8 - 49 Block Diagram of Output Compare Function (For Timer RD0)**	
	Modification of **Figure 8 - 53 Block Diagram of PWM Function (For Timer RD0)**	
	Modification of **Figure 8 - 56 Block Diagram of Reset Synchronous PWM Mode (For Timer RD0)**	**CHAPTER 8 TIMER RD**
	Modification of **Figure 8 - 58 Block Diagram of Complementary PWM Mode (For Timer RD0)**	
	Modification of **Figure 8 - 61 Block Diagram of PWM3 Mode (For Timer RD0)**	
	Modification of description in **8.8 PWM Option Unit (PWMOP)**	
	Modification of description	**CHAPTER 10 TIMER RX**
	Modification of **Figure 18 - 6 Operation Setting Flow Chart of Programmable Gain Amplifier (PGA)**	**CHAPTER 18 PROGRAMMABLE GAIN AMPLIFIER (PGA)**
	Addition of description to the beginning	**CHAPTER 19 SERIAL ARRAY UNIT**
	Addition of caution in **19.3.12 Serial output register m (SOm)**	
	Addition of cautions 1 and 2 to the beginning	**CHAPTER 20 SERIAL INTERFACE IICA**
	Addition of note to table 20 - 1	
	Addition of remark 3 to figure 20 - 13	
	Addition of description in **20.3.6 IICA low-level width setting register n (IICWLn)**	
	Addition of note to figure 20 - 18	

(8/8)

Edition	Description	Chapter
Rev. 0.50	Addition of description in **22.5.3 DTC Pending Instruction**	**CHAPTER 22 DATA TRANSFER CONTROLLER (DTC)**
	Addition of caution in **24.4.4 Interrupt servicing during division instruction**	**CHAPTER 24 INTERRUPT FUNCTIONS**
	Addition of description in **24.4.5 Interrupt request hold**	
	Correction of error in note of figure 30 - 11	**CHAPTER 30 SAFETY FUNCTIONS**
	Addition of description to figure 30 - 17	
	Addition of caution to table 36 – 16	**CHAPTER 36 INSTRUCTION SET**
	Addition of target products to the beginning	**CHAPTER 37 ELECTRICAL SPECIFICATIONS (T_A = -40 to +85°C) (TARGET)**
	Modification of **37.2.2 On-chip oscillator characteristics**	
	Addition of note 4 in **37.3.1 Pin characteristics**	
	Modification of **37.3.2 Supply current characteristics**	
	Modification of **37.6.4 Comparator**	
	Modification of **37.6.5 PGA**	
	Renamed to **37.7 RAM Data Retention Characteristics**	
	Addition of target products to the beginning	**CHAPTER 38 ELECTRICAL SPECIFICATIONS (G: T_A = -40 to +105°C) (TARGET)**
	Modification of **38.2.2 On-chip oscillator characteristics**	
	Modification of “Output voltage, low”	
	Modification of **38.3.2 Supply current characteristics**	
	Modification of **38.6.4 Comparator**	
	Modification of **38.6.5 PGA**	
	Renamed to **38.7 RAM Data Retention Characteristics**	
Rev. 0.10	First edition issued	

RL78/G1F User’s Manual: Hardware

Publication Date: Rev.1.30 Apr 26, 2024

Published by: Renesas Electronics Corporation

RL78/G1F

Renesas Electronics Corporation

R01UH0516EJ0130