To our customers,

Old Company Name in Catalogs and Other Documents

On April 1st, 2010, NEC Electronics Corporation merged with Renesas Technology Corporation, and Renesas Electronics Corporation took over all the business of both companies. Therefore, although the old company name remains in this document, it is a valid Renesas Electronics document. We appreciate your understanding.

Renesas Electronics website: http://www.renesas.com

April 1st, 2010
Renesas Electronics Corporation

EOL product

Issued by: Renesas Electronics Corporation (http://www.renesas.com)

Send any inquiries to http://www.renesas.com/inquiry.

RENESAS

Notice

1. All information included in this document is current as of the date this document is issued. Such information, however, is subject to change without any prior notice. Before purchasing or using any Renesas Electronics products listed herein, please confirm the latest product information with a Renesas Electronics sales office. Also, please pay regular and careful attention to additional and different information to be disclosed by Renesas Electronics such as that disclosed through our website.
2. Renesas Electronics does not assume any liability for infringement of patents, copyrights, or other intellectual property rights of third parties by or arising from the use of Renesas Electronics products or technical information described in this document. No license, express, implied or otherwise, is granted hereby under any patents, copyrights or other intellectual property rights of Renesas Electronics or others.
3. You should not alter, modify, copy, or otherwise misappropriate any Renesas Electronics product, whether in whole or in part.
4. Descriptions of circuits, software and other related information in this document are provided only to illustrate the operation of semiconductor products and application examples. You are fully responsible for the incorporation of these circuits, software, and information in the design of your equipment. Renesas Electronics assumes no responsibility for any losses incurred by you or third parties arising from the use of these circuits, software, or information.
5. When exporting the products or technology described in this document, you should comply with the applicable export control laws and regulations and follow the procedures required by such laws and regulations. You should not use Renesas Electronics products or the technology described in this document for any purpose relating to military applications or use by the military, including but not limited to the development of weapons of mass destruction. Renesas Electronics products and technology may not be used for or incorporated into any products or systems whose manufacture, use, or sale is prohibited under any applicable domestic or foreign laws or regulations.
6. Renesas Electronics has used reasonable care in preparing the information included in this document, but Renesas Electronics does not warrant that such information is error free. Renesas Electronics assumes no liability whatsoever for any damages incurred by you resulting from errors in or omissions from the information included herein.
7. Renesas Electronics products are classified according to the following three quality grades: "Standard", "High Quality", and "Specific". The recommended applications for each Renesas Electronics product depends on the product's quality grade, as indicated below. You must check the quality grade of each Renesas Electronics product before using it in a particular application. You may not use any Renesas Electronics product for any application categorized as "Specific" without the prior written consent of Renesas Electronics. Further, you may not use any Renesas Electronics product for any application for which it is not intended without the prior written consent of Renesas Electronics. Renesas Electronics shall not be in any way liable for any damages or losses incurred by you or third parties arising from the use of any Renesas Electronics product for an application categorized as "Specific" or for which the product is not intended where you have failed to obtain the prior written consent of Renesas Electronics. The quality grade of each Renesas Electronics product is "Standard" unless otherwise expressly specified in a Renesas Electronics data sheets or data books, etc.

   "Standard": Computers; office equipment; communications equipment; test and measurement equipment; audio and visual equipment; home electronic appliances; machine tools; personal electronic equipment; and industrial robots.

   "High Quality": Transportation equipment (automobiles, trains, ships, etc.); traffic control systems; anti-disaster systems; anti-crime systems; safety equipment; and medical equipment not specifically designed for life support.

   "Specific": Aircraft; aerospace equipment; submersible repeaters; nuclear reactor control systems; medical equipment or systems for life support (e.g. artificial life support devices or systems), surgical implantations, or healthcare intervention (e.g. excision, etc.), and any other applications or purposes that pose a direct threat to human life.
8. You should use the Renesas Electronics products described in this document within the range specified by Renesas Electronics, especially with respect to the maximum rating, operating supply voltage range, movement power voltage range, heat radiation characteristics, installation and other product characteristics. Renesas Electronics shall have no liability for malfunctions or damages arising out of the use of Renesas Electronics products beyond such specified ranges.
9. Although Renesas Electronics endeavors to improve the quality and reliability of its products, semiconductor products have specific characteristics such as the occurrence of failure at a certain rate and malfunctions under certain use conditions. Further, Renesas Electronics products are not subject to radiation resistance design. Please be sure to implement safety measures to guard them against the possibility of physical injury, and injury or damage caused by fire in the event of the failure of a Renesas Electronics product, such as safety design for hardware and software including but not limited to redundancy, fire control and malfunction prevention, appropriate treatment for aging degradation or any other appropriate measures. Because the evaluation of microcomputer software alone is very difficult, please evaluate the safety of the final products or system manufactured by you.
10. Please contact a Renesas Electronics sales office for details as to environmental matters such as the environmental compatibility of each Renesas Electronics product. Please use Renesas Electronics products in compliance with all applicable laws and regulations that regulate the inclusion or use of controlled substances, including without limitation, the EU RoHS Directive. Renesas Electronics assumes no liability for damages or losses occurring as a result of your noncompliance with applicable laws and regulations.
11. This document may not be reproduced or duplicated, in any form, in whole or in part, without prior written consent of Renesas Electronics.
12. Please contact a Renesas Electronics sales office if you have any questions regarding the information contained in this document or Renesas Electronics products, or if you have any other inquiries.

(Note 1) "Renesas Electronics" as used in this document means Renesas Electronics Corporation and also includes its majority-owned subsidiaries.

(Note 2) "Renesas Electronics product(s)" means any product developed or manufactured by or for Renesas Electronics.

EOL product

To all our customers

Regarding the change of names mentioned in the document, such as Hitachi Electric and Hitachi XX, to Renesas Technology Corp.

The semiconductor operations of Mitsubishi Electric and Hitachi were transferred to Renesas Technology Corporation on April 1st 2003. These operations include microcomputer, logic, analog and discrete devices, and memory chips other than DRAMs (flash memory, SRAMs etc.) Accordingly, although Hitachi, Hitachi, Ltd., Hitachi Semiconductors, and other Hitachi brand names are mentioned in the document, these names have in fact all been changed to Renesas Technology Corp. Thank you for your understanding. Except for our corporate trademark, logo and corporate statement, no changes whatsoever have been made to the contents of the document, and these changes do not constitute any alteration to the contents of the document itself.

Renesas Technology Home Page: http://www.renesas.com

EOL Product

Renesas Technology Corp.
Customer Support Dept.
April 1, 2003

Cautions

Keep safety first in your circuit designs!

1. Renesas Technology Corporation puts the maximum effort into making semiconductor products better and more reliable, but there is always the possibility that trouble may occur with them. Trouble with semiconductors may lead to personal injury, fire or property damage.
   Remember to give due consideration to safety when making your circuit designs, with appropriate measures such as (i) placement of substitutive, auxiliary circuits, (ii) use of nonflammable material or (iii) prevention against any malfunction or mishap.

Notes regarding these materials

1. These materials are intended as a reference to assist our customers in the selection of the Renesas Technology Corporation product best suited to the customer's application; they do not convey any license under any intellectual property rights, or any other rights, belonging to Renesas Technology Corporation or a third party.
2. Renesas Technology Corporation assumes no responsibility for any damage, or infringement of any third-party's rights, originating in the use of any product data, diagrams, charts, programs, algorithms, or circuit application examples contained in these materials.
3. All information contained in these materials, including product data, diagrams, charts, programs and algorithms represents information on products at the time of publication of these materials, and are subject to change by Renesas Technology Corporation without notice due to product improvements or other reasons. It is therefore recommended that customers contact Renesas Technology Corporation or an authorized Renesas Technology Corporation product distributor for the latest product information before purchasing a product listed herein.
   The information described here may contain technical inaccuracies or typographical errors.
   Renesas Technology Corporation assumes no responsibility for any damage, liability, or other loss rising from these inaccuracies or errors.
   Please also pay attention to information published by Renesas Technology Corporation by various means, including the Renesas Technology Corporation Semiconductor home page (http://www.renesas.com).
4. When using any or all of the information contained in these materials, including product data, diagrams, charts, programs, and algorithms, please be sure to evaluate all information as a total system before making a final decision on the applicability of the information and products. Renesas Technology Corporation assumes no responsibility for any damage, liability or other loss resulting from the information contained herein.
5. Renesas Technology Corporation semiconductors are not designed or manufactured for use in a device or system that is used under circumstances in which human life is potentially at stake. Please contact Renesas Technology Corporation or an authorized Renesas Technology Corporation product distributor when considering the use of a product contained herein for any specific purposes, such as apparatus or systems for transportation, vehicular, medical, aerospace, nuclear, or undersea repeater use.
6. The prior written approval of Renesas Technology Corporation is necessary to reprint or reproduce in whole or in part these materials.
7. If these products or technologies are subject to the Japanese export control restrictions, they must be exported under a license from the Japanese government and cannot be imported into a country other than the approved destination.
   Any diversion or reexport contrary to the export control laws and regulations of Japan and/or the country of destination is prohibited.
8. Please contact Renesas Technology Corporation for further details on these materials or the products contained therein.

EOL Product

HD404669 Series

Low-Voltage AS Microcomputers with On-Chip DTMF Generation Circuit

ADE-202-083B
Rev. 3.0
Sept. 1999

EOL Product

Description

The HD404669 Series microcomputers incorporate a DTMF generation circuit, two comparators, and a serial interface on chip. They also provide input and output pins with large current handling capacities. Thus they are 4-bit single-chip microcomputers that are optimal for use in multifunction telephones, cordless telephones, and other communications equipment.

HD404669 Series microcomputers have a 32.768 kHz sub-oscillator for realtime clock use, providing a time counting facility, and a variety of power supply modes to reduce current drain.

The HD407A4669 is a ZTAT™ microcomputer with on-chip PROM that drastically shortens development time and ensures a smooth transition from debugging to mass production. (The PROM programming specifications are the same as for the 27256 type.)

ZTAT™: Zero Turn-Around Time ZTAT is a trademark of Hitachi, Ltd.

Features

- 1,152-digit × 4-bit RAM
- I/O pins: 47
  - — High-current I/O pins (source: 10 mA max.): 4
  - — High-current I/O pins (sink: 15 mA max.): 5
- Timer counters: 3
- Input capture: one 8-bit channel
- Timer outputs: 2 (with PWM output capability)
- Event input: 1 (edge-programmable)
- Clock synchronous 8-bit serial interface: 1
- DTMF generation circuit
- Comparator: 2 channels
- System clock oscillator
  Ceramic oscillator, crystal oscillator, or external clock operation possible

- Subsystem clock oscillator
  32.768 kHz crystal oscillator for realtime clock use
- Interrupts
  — External: 5 (including 3 edge-programmable)
  — Internal: 4
- Subroutine stack: max. 16 levels including interrupts
- Low-power modes: 4
- System clock division software switching (1/4, 1/8, 1/16, 1/32)
- Instruction execution time
  Min. 1 µs (f_{OSC} = 4 MHz, 1/4 clock division)
  Min. 0.5 µs (f_{OSC} = 8 MHz, 1/4 clock division)
- Operating voltage
  1.8 V to 5.5 V
  2.2 V to 5.5 V (ZTAT™)

EOL Product

Ordering Information

Type	Product Name	Model Name	ROM (Words)	RAM (Digits)	Package
Mask ROM (standard version)	HD404668	HD404668H	8,192	1,152	64-pin plastic QFP (FP-64A)
	HD4046612	HD4046612H	12,288		
	HD404669	HD404669H	16,384		
	HCD404669	HCD404669	16,384		Chip *1 *2
Mask ROM (high-speed version)	HD40A4668	HD40A4668H	8,192		64-pin plastic QFP (FP-64A)
	HD40A46612	HD40A46612H	12,288		
	HD40A4669	HD40A4669H	16,384		
ZTAT™ (high-speed version)	HD407A4669	HD407A4669H	16,384		

Note: 1. ZTAT™ chip shipment is not supported.
2. The specifications of shipped chips differ from those of the package product. Please contact our sales staff for details.

Cautions about Operation

The mask ROM and ZTAT™ versions have been confirmed as fully meeting the reference values for electrical characteristics shown in this data sheet. However, actual performance figures, operating margins, noise margins, and other properties may vary due to differences in the manufacturing process, internal

wiring patterns, etc. Users are therefore requested to confirm the operation of individual products by conducting evaluation tests under conditions equivalent to those in the actual application system.

List of Functions

		Standard version	HD404668	HD4046612	HD404669	HCD404669	
Product name		**High-speed version**	**HD40A4668**	**HD40A46612**	**HD40A4669**	**———**	**HD407A4669**
ROM (Words)			8,192	12,288	16,384	16,384	16,384PROM
RAM (Digits)			1,152				
I/O			52 (max)				
	Large-current I/O pins		4 (Source 10mA max), 5 (Sink 15 mA max)				
Timer / Counter			3				
	Input capture		8 bit × 1				
	Timer output		2 (PWM output possible)				
	Event input		1 (edge selection possible)				
Serial interface			1 (8-bit clock syncronous)				
DTMF generation circuit			Available				
Comparator			2				
Interrupt	External		5 (edge selection possible for 3)				
	Internal		4				
Low-Power Dissipation Mode			4				
	Stop mode		Available				
	Watch /mode		Available				
	Standby mode		Available				
	Subactive mode		Available				
Main Oscillator	Ceramic oscillation		400 kHz, 800 kHz, 2 MHz, 3.58 MHz, 4 MHz, 7.16 MHz*, 8 MHz*				
	Crystal oscillation		400 kHz, 800 kHz, 2 MHz, 3.58 MHz, 4 Mhz, 7.16 MHz*, 8 MHz*				
Sub oscillator	Crystal oscillation		32.768 kHz				
Minimum instruction execution time	Standard version		1 µs (f_{osc} = 4 MHz, 1/4 frequency division)				
	High-speed version		0.5 µs (f_{osc} = 8 MHz, 1/4 frequency division)				
Operating voltage (V)			1.8 to 5.5			1.8 to 5.5	2.2 to 5.5
Package			64-pin plastic QFP (FP-64A)			Chip	64-pin plastic QFP (FP-64A)
Guaranteed operation temperature (˚C)			–20 to +75			+75°C	–20 to +75

Note: * Applies to high-speed versions (HD40A4668, HD40A46612, HD40A4669, HD407A4669).

EOL Product

Pin Arrangement

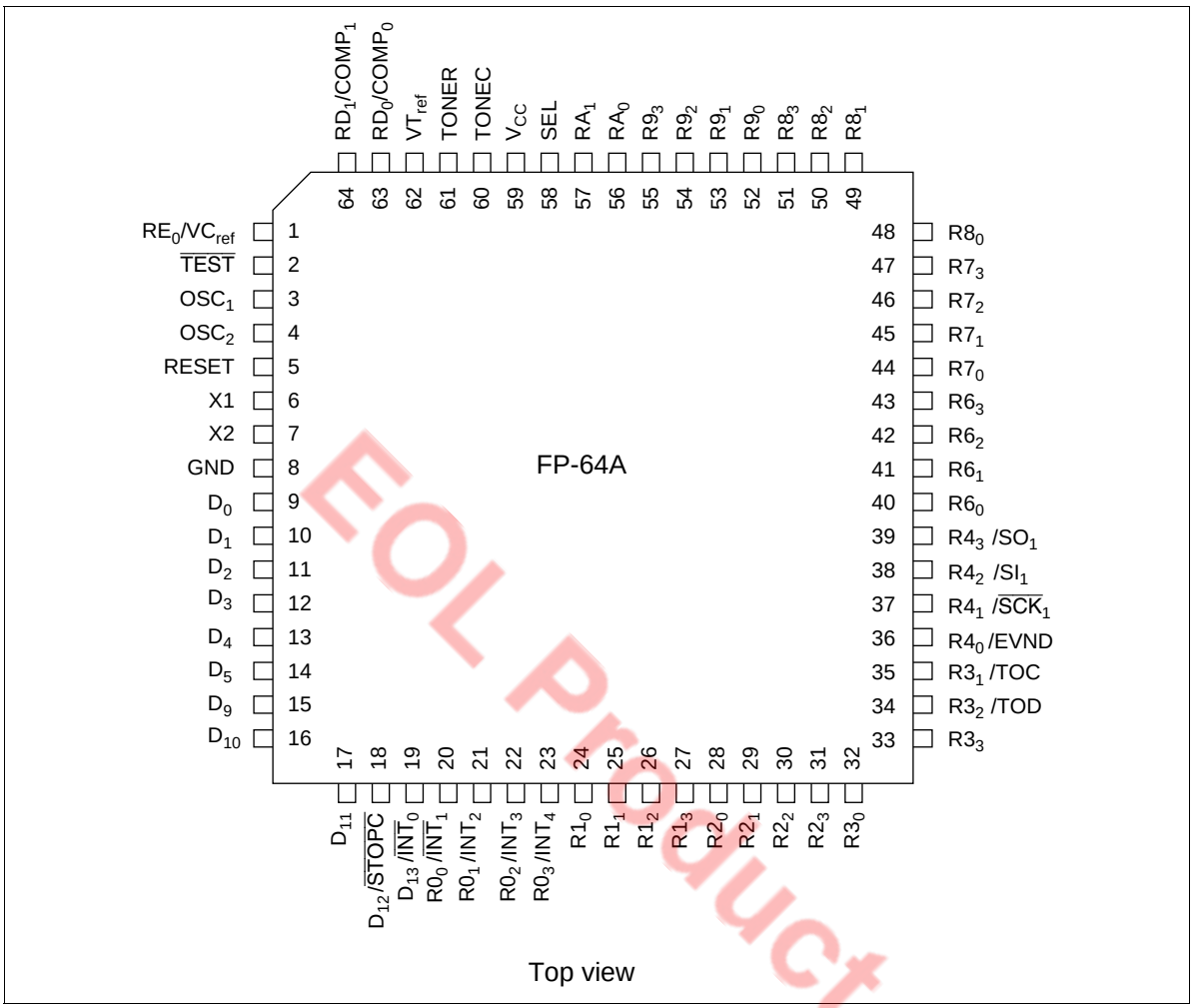

EOL Product

Pad Arrangement

HCD404669

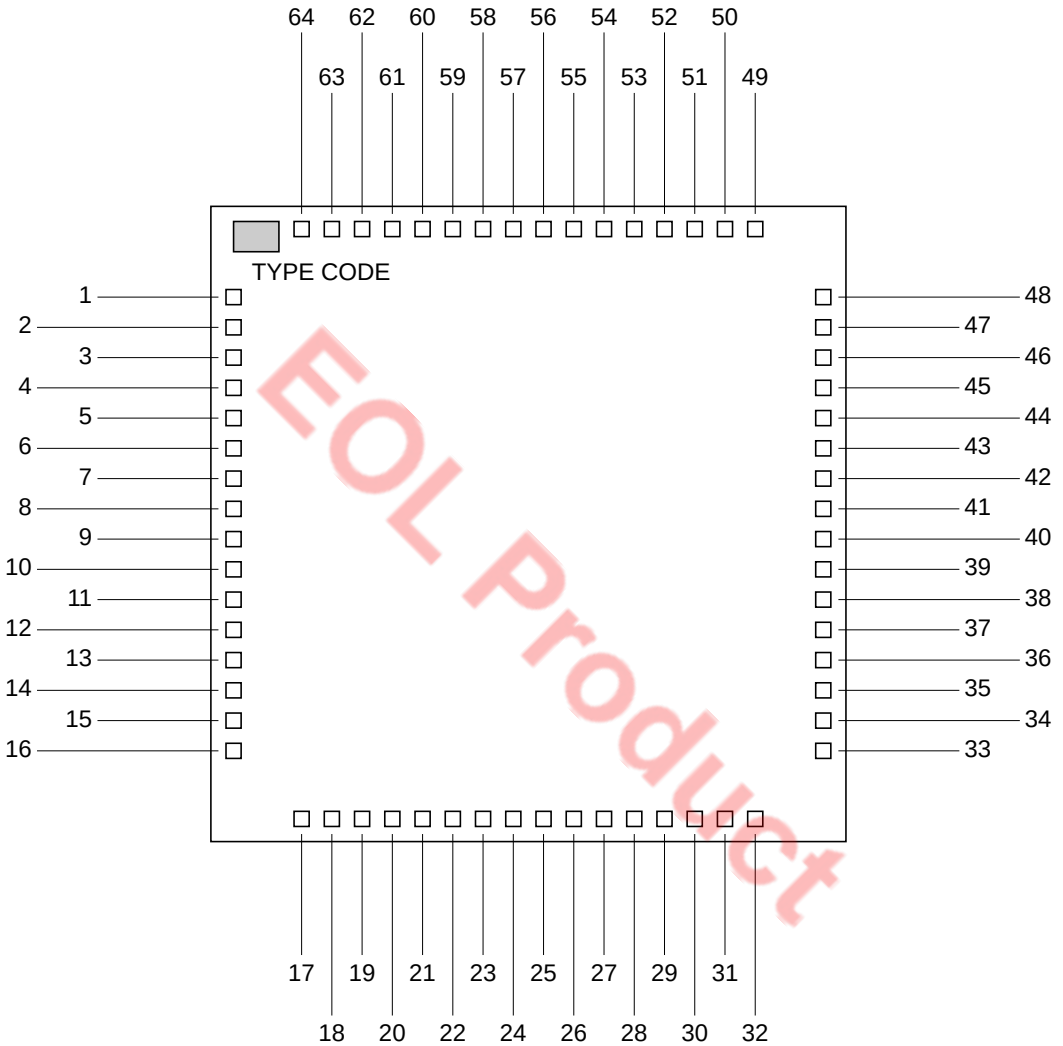

TYPE CODE: HD404669

Bonding Pad Coordinates

HCD404669

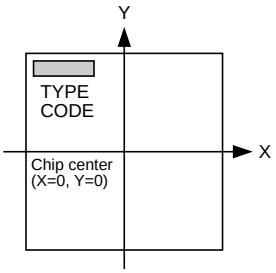

Chip Size (X × Y): 4.34 × 4.01 (mm)
Coordinates: Pad Center
Home Point position: Chip Center
Pad size (X × Y): 90 × 90 (µm)
Chip thickness: 400 (µm)

Pad No.	Pad Name	Coordinates X	Coordinates Y	Pad No.	Pad Name	Coordinates X	Coordinates Y	Pad No.	Pad Name	Coordinates X	Coordinates Y	Pad No.	Pad Name	Coordinates X	Coordinates Y
1	RE0	–1983	1444	17	D11	–1607	–1819	33	R33	1983	–1444	49	R81	1587	1819
2	TESTN	–1983	1252	18	D12	–1394	–1819	34	R32	1983	–1252	50	R82	1374	1819
3	OSC1	–1983	1062	19	D13	–1181	–1819	35	R31	1983	–1060	51	R83	1161	1819
4	OSC2	–1983	871	20	R00	–968	–1819	36	R40	1983	–867	52	R90	948	1819
5	RESET	–1983	657	21	R01	–755	–1819	37	R41	1983	–675	53	R91	735	1819
6	X1	–1983	466	22	R02	–541	–1819	38	R42	1983	–483	54	R92	522	1819
7	X2	–1983	275	23	R03	–329	–1819	39	R43	1983	–291	55	R93	309	1819
8	GND	–1983	84	24	R10	–117	–1819	40	R60	1983	–99	56	RA0	93	1819
9	D0	–1983	–108	25	R11	96	–1819	41	R61	1983	93	57	RA1	–177	1819
10	D1	–1983	–299	26	R12	309	–1819	42	R62	1983	285	58	SEL	–329	1819
11	D2	–1983	–490	27	R13	522	–1819	43	R63	1983	478	59	V_{CC}	–542	1819
12	D3	–1983	–680	28	R20	735	–1819	44	R70	1983	670	60	TONEC	–755	1819
13	D4	–1983	–871	29	R21	948	–1819	45	R71	1983	862	61	TONER	–968	1819
14	D5	–1983	–1062	30	R22	1161	–1819	46	R72	1983	1054	62	VTREF	–1181	1819
15	D9	–1983	–1253	31	R23	1374	–1819	47	R73	1983	1246	63	RD0	–1394	1819
16	D10	–1983	–1444	32	R30	1587	–1819	48	R80	1983	1444	64	RD1	–1607	1819

EOL Product

Pin Description

Item	Symbol	Pin Number FP-64A, chip	I/O	Function
Power supply	V_{CC}	59	–	Applies power voltage
	GND	8	–	Connected to ground
Test	$\overline{TEST}$	2	I	Used for factory testing only: Connect this pin to V_{CC}
Reset	RESET	5	I	Resets the MCU
Oscillator	OSC_1	3	I	Input/output pins for the internal oscillator circuit: Connect them to a ceramic oscillator ,crystal oscillator or connect OSC_1 to an external oscillator circuit
	OSC_2	4	O	
	X1	6	I	Used for a 32.768-kHz crystal for clock purposes. If not to be used, fix the X1 pin to V_{CC} and leave the X2 pin open.
	X2	7	O	
Port	D_0–D_5, D_9–D_{11}	9-17	I/O	Input/output pins addressed by individual bits; D_0 to D_3 are source high-current input/output pins. A maximum 10 mA current can be supplied to each pin. D_4, D_5, and D_9 to D_{11} are sink high-current input/output pins. A maximum 15 mA current can be supplied to each pin.
	D_{12}, D_{13}	18, 19	I	Input pins addressable by individual bits
	$R0_0$–$R4_3$, $R6_0$–RA_1	20–57	I/O	Input/output pins addressable in 4-bit units
	RD_0, RD_1, RE_0	63, 64, 1	I	Input pins addressable in 4-bit units
Interrupt	$\overline{INT_0}$, $\overline{INT_1}$, INT_2–INT_4	19-23	I	Input pins for external interrupts
Stop clear	$\overline{STOPC}$	18	I	Input pin for transition from stop mode to active mode
Serial interface	$\overline{SCK_1}$	37	I/O	Serial interface clock input/output pin
	SI_1	38	I	Serial interface receive data input pin
	SO_1	39	O	Serial interface transmit data output pin
Timer	TOC, TOD	35, 34	O	Timer output pins
	EVND	36	I	Event input pin
DTMF	TONER	61	O	Output pin for DTMF row signals
	TONEC	60	O	Output pin for DTMF column signals
	VT_{ref}	62	–	Reference voltage pin for DTMF signals. Voltage conditions are: $V_{CC} \geq VT_{ref} \geq GND$

EOL Product

Item	Symbol	Pin Number FP-64A, chip	I/O	Function
Voltage comparator	$COMP_0$, $COMP_1$	63, 64	I	Comparator analog input pins.
	VC_{ref}	1	–	Analog input pin threshold voltage reference level power supply pin.
Frequency division ratio selection	SEL	58	I	Pin that selects the system clock division ratio immediately after a reset and when returning from stop mode to active mode. Connect to Vcc voltage to select division-by-4, or to GND potential to select division-by-32.

EOL Product

Block Diagram

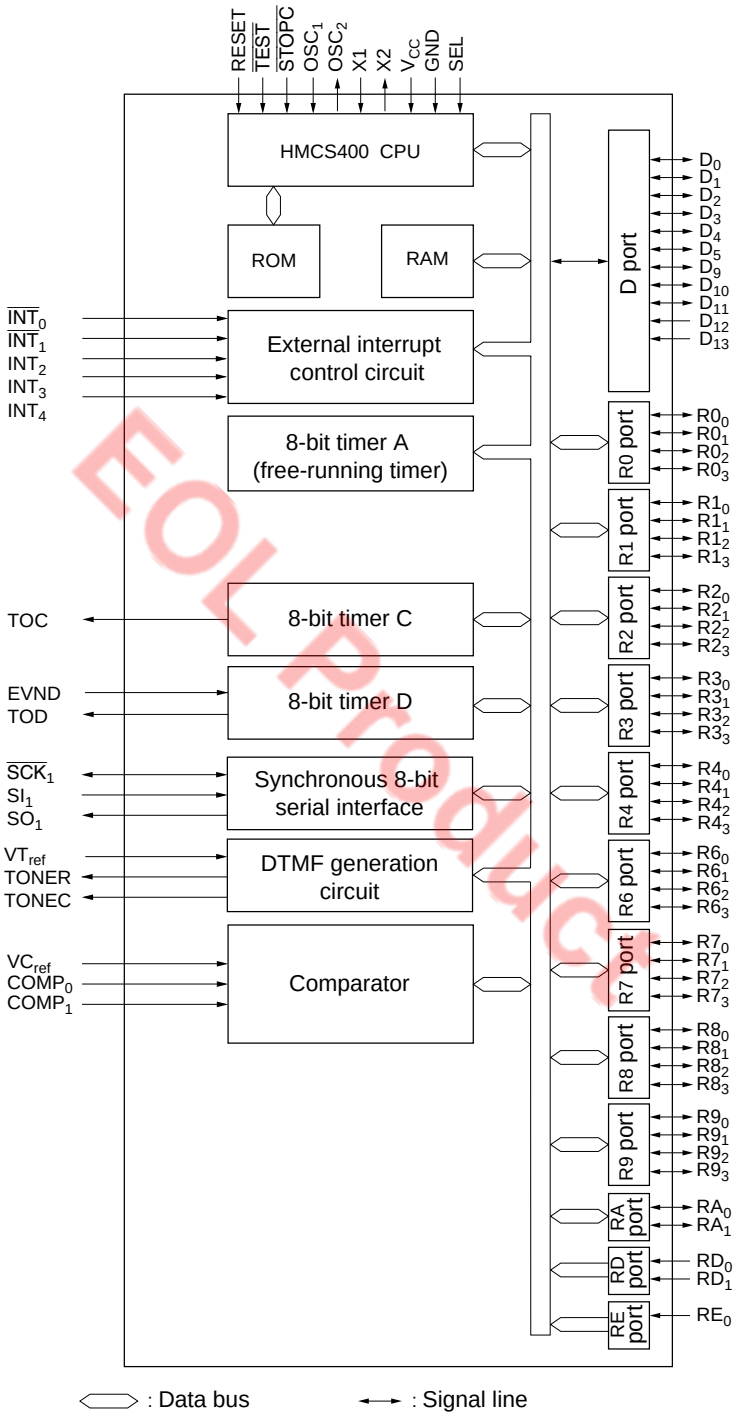

EOL Product

Memory Map

ROM Memory Map

The ROM memory map is shown in figure 1 and described below.

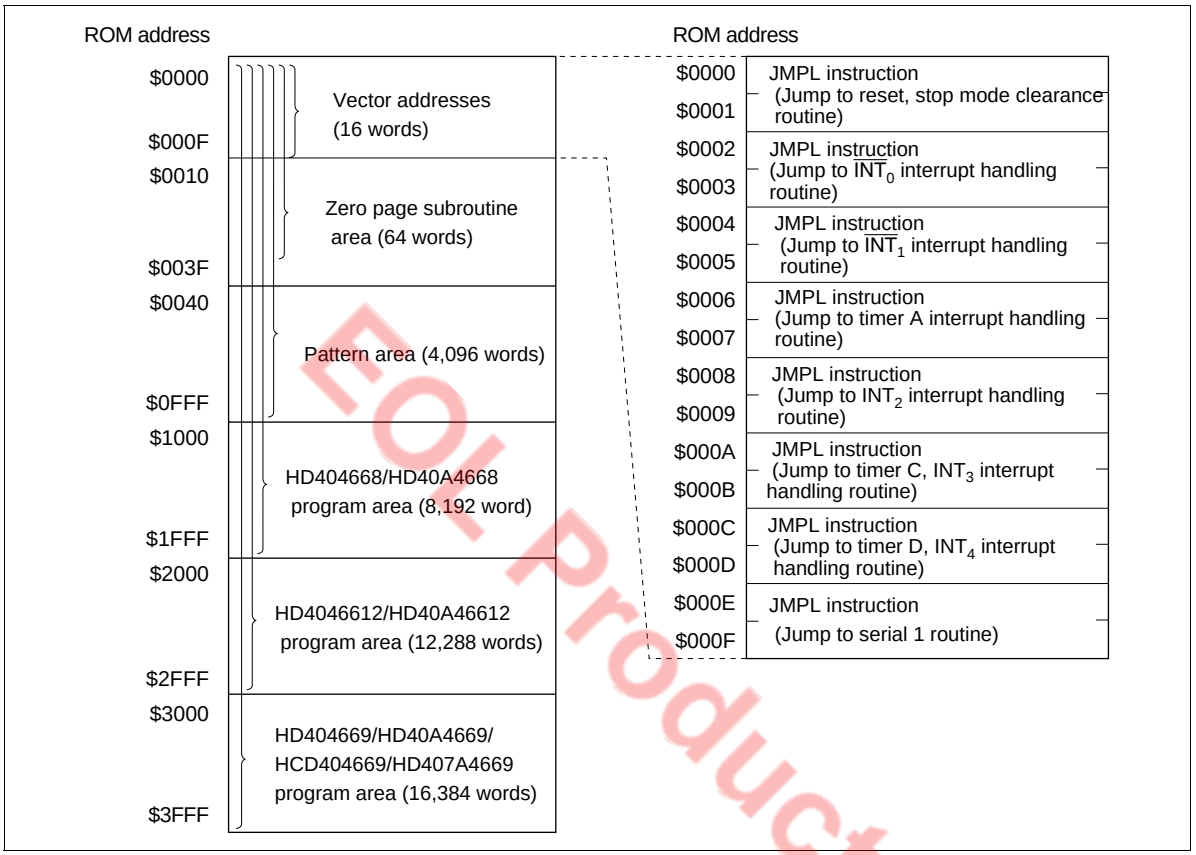

EOL Product

Figure 1 ROM Memory Map

Vector Address Area ($0000–$000F): Reserved for JMPL instructions that branch to the start addresses of the reset and interrupt routines. After MCU reset or an interrupt, program execution continues from the vector address.

Zero-Page Subroutine Area ($0000–$003F): Reserved for subroutines. The program branches to a subroutine in this area in response to the CAL instruction.

Pattern Area ($0000–$0FFF): Contains ROM data that can be referenced with the P instruction.

Program Area ($0000–$1FFF: HD404668, HD40A4668; $0000–$2FFF: HD4046612, HD40A46612; $0000–$3FFF: HD404669, HD40A4669, HD407A4669, HCD404669): Used for program coding.

RAM Memory Map

The MCU contains a RAM area consisting of a memory register area, a data area, and a stack area. In addition, an interrupt control bits area, special function register area, and register flag area are mapped onto the same RAM memory space. The RAM memory map is shown in figure 2 and described below.

RAM-Mapped Register Area ($000–$03F):

- Interrupt Control Bits Area ($000–$003)

  This area is used for interrupt control bits (figure 3). These bits can be accessed only by RAM bit manipulation instructions (SEM/SEMD, REM/REMD, and TM/TMD). However, note that not all the instructions can be used for each bit. Limitations on using the instructions are shown in figure 4.

- Special Function Register Area ($004–$01F, $024–$03F)

  This area is used as mode registers and data registers for external interrupts, serial interface, timers, DTMF, comparator, and as data control registers for I/O ports. The structure is shown in figures 2 and 5. These registers can be classified into three types: write-only (W), read-only (R), and read/write (R/W). RAM bit manipulation instructions cannot be used for these registers.

- Register Flag Area ($020–$023)

  This area is used for the DTON, WDON, and other register flags and interrupt control bits (figure 3). These bits can be accessed only by RAM bit manipulation instructions (SEM/SEMD, REM/REMD, and TM/TMD). However, note that not all the instructions can be used for each bit. Limitations on using the instructions are shown in figure 4.

EOL Product

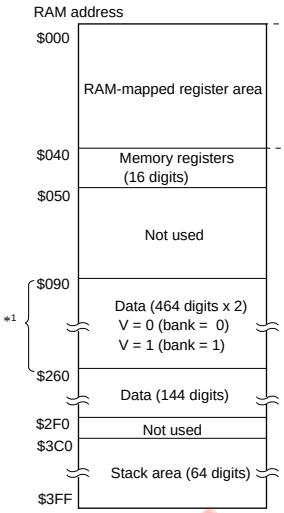

R : Read only
W : Write only
R/W : Read/Write

Note : *1. There are two data areas, V = 0 (bank 0) and V = 1 (bank 1)

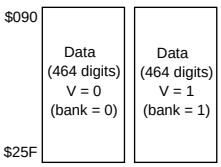

RAM address

$000	Interrupt control bit area		
$001			
$002			
$003			
$004	Port mode register A	(PMRA)	W
$005	Serial mode register 1A	(SM1A)	W
$006	Serial data register 1L	(SR1L)	R/W
$007	Serial data register 1U	(SR1U)	R/W
$008	Timer mode register A	(TMA)	W
$009	Not used		
$00A			
$00B			
$00C	Miscellaneous register	(MIS)	W
$00D	Timer mode register C1	(TMC1)	W
$00E	Timer C	(TRCL/TWCL)	R/W *2
$00F		(TRCU/TWCU)	R/W *2
$010	Timer mode register D1	(TMD1)	W
$011	Timer D	(TRDL/TWDL)	R/W *2
$012		(TRDU/TWDU)	R/W *2
$013	Not used		
$014	Timer mode register C2	(TMC2)	R/W
$015	Timer mode register D2	(TMD2)	R/W
$016	Not used		
$017	Compare data register	(CDR)	R
$018	Compare enable register	(CER)	W
$019	Tone generator mode register	(TGM)	W
$01A	Tone generator control register	(TGC)	W
$01B	Not used		
$01C			
$01D			
$01E			
$01F			
$020	Register flag area		
$021			
$022			
$023			
$024	Port mode register B	(PMRB)	W
$025	Port mode register C	(PMRC)	W
$026	Detection edge select register 1	(ESR1)	W
$027	Detection edge select register 2	(ESR2)	W
$028	Serial mode register 1B	(SM1B)	W
$029	System clock select register 1	(SSR1)	W
$02A	System clock select register 2	(SSR2)	W
$02B	Not used		
$02C	Data control register D_0 to D_3	(DCD0)	W
$02D	Data control register D_4 to D_5	(DCD1)	W
$02E	Data control register D_9 to D_{11}	(DCD2)	W
$02F	Not used		
$030	Data control register R0	(DCR0)	W
$031	Data control register R1	(DCR1)	W
$032	Data control register R2	(DCR2)	W
$033	Data control register R3	(DCR3)	W
$034	Data control register R4	(DCR4)	W
$035	Not used		
$036	Data control register R6	(DCR6)	W
$037	Data control register R7	(DCR7)	W
$038	Data control register R8	(DCR8)	W
$039	Data control register R9	(DCR9)	W
$03A	Data control register RA	(DCRA)	W
$03B	Not used		
$03C			
$03D			
$03E			
$03F	V register	(V)	R/W

*2. Two registers are mapped onto the same address ($00E, $00F, $011, $012)

$00E	Timer read register CL	(TRCL)	R	Timer write register CL	(TWCL)	W
$00F	Timer read register CU	(TRCU)	R	Timer write register CU	(TWCU)	W

$011	Timer read register DL	(TRDL)	R	Timer write register DL	(TWDL)	W
$012	Timer read register DU	(TRDU)	R	Timer write register DU	(TWDU)	W

Figure 2 RAM Memory Map

EOL Product

RAM address

	Bit 3	Bit 2	Bit 1	Bit 0
$000	IM0 ($\overline{INT_0}$ interrupt mask)	IF0 ($\overline{INT_0}$ interrupt request flag)	RSP (Reset stack pointer)	IE (Interrupt enable flag)
$001	IMTA (Timer A interrupt mask)	IFTA (Timer A interrupt request flag)	IM1 ($\overline{INT_1}$ interrupt mask)	IF1 ($\overline{INT_1}$ interrupt request flag)
$002	IMTC (Timer C interrupt mask)	IFTC (Timer C interrupt request flag)	Not used	Not used
$003	IMS1 (Serial 1 interrupt mask)	IFS1 (Serial 1 interrupt request flag)	IMTD (Timer D interrupt mask)	IFTD (Timer D interrupt request flag)

Interrupt control bits area

RAM address

	Bit 3	Bit 2	Bit 1	Bit 0
$020	DTON (DTON flag)	Not used	WDON (Watchdog on flag)	LSON (Low speed on flag)
$021	RAME (RAM enable flag)	Not used	ICEF (Input capture error flag)	ICSF (Input capture status flag)
$022	IM3 (INT_3 interrupt mask)	IF3 (INT_3 interrupt request flag)	IM2 (INT_2 interrupt mask)	IF2 (INT_2 interrupt request flag)
$023	Not used	Not used	IM4 (INT_4 interrupt mask)	IF4 (INT_4 interrupt request flag)

Register flag area

IF : Interrupt Request Flag
IM : Interrupt Mask
IE : Interrupt Enable Flag
SP : Stack Pointer

Figure 3 Configuration of Interrupt Control Bits and Register Flag Areas

EOL Product

Bits in the interrupt control bits area and register flag area can be set and reset by the SEM or SEMD instruction and the REM or REMD instruction, and tested by the TM or TMD instruction. They are not affected by any other instructions.
The following restrictions apply to individual bits.

	SEM/SEMD	REM/REMD	TM/TMD
IE	Allowed	Allowed	Allowed
IM			
LSON			
IF	Not executed	Allowed	Allowed
ICSF			
ICEF			
RAME			
RSP	Not executed	Allowed	Inhibited
WDON	Allowed	Not executed	Inhibited
DTON	Not executed in active mode	Allowed	Allowed
	Used in subactive mode		
Not used	Not executed	Not executed	Inhibited

Note: WDON is reset by MCU reset or by $\overline{\text{STOPC}}$ enable for stop mode cancellation.
DTON is always reset in active mode.
If the TM or TMD instruction is executed for the inhibited bits or non-existing bits, the value in ST becomes invalid.

Figure 4 Usage Limitations of RAM Bit Manipulation Instructions

EOL Product

		Bit 3	Bit 2	Bit 1	Bit 0
	$000	Interrupt control bits area			
	$001				
	$002				
	$003				
PMRA	$004			$R4_2/SI_1$	$R4_3/SO_1$
SM1A	$005	$R4_1/\overline{SCK}_1$	Serial transfer clock speed selection 1		
SR1L	$006	Serial data register 1 (lower)			
SR1U	$007	Serial data register 1 (upper)			
TMA	$008	Timer A/time base	Clock source setting (timer A)		
	$009				
	$00A				
	$00B				
MIS	$00C	MOS pull-up/pull-down control	$R4_3/SO_1$ PMOS control	Interrupt frame period selection	
TMC1	$00D	Reload on/off	Clock source setting (timer C)		
TRCL/TWCL	$00E	Timer C register (lower)			
TRCU/TWCU	$00F	Timer C register (upper)			
TMD1	$010	Reload on/off	Clock source setting (timer D)		
TRDL/TWDL	$011	Timer D register (lower)			
TRDU/TWDU	$012	Timer D register (upper)			
	$013				
TMC2	$014		Timer C output mode setting		
TMD2	$015	Input capture selection	Timer D output mode setting		
	$016				
CDR	$017			$COMP_1$ comparison result	$COMP_0$ comparison result
CER	$018	Comparator operation selection		Comparator selection	
TGM	$019	TONEC output frequency		TONER output frequency	
TGC	$01A	TONEC output	TONER output	DTMF enable	
	$01B				
	$01C				
	$01D				
	$01E				
	$01F				
	$020	Register flag area			
	$021				
	$022				
	$023				
PMRB	$024	$R0_3/INT_4$	$R0_2/INT_3$	$R0_1/INT_2$	$R0_0/\overline{INT}_1$
PMRC	$025	$D_{13}/\overline{INT}_0$	$D_{12}/\overline{STOPC}$	$R4_0$/EVND	
ESR1	$026	INT_3 detection edge selection		INT_2 detection edge selection	
ESR2	$027	EVND detection edge selection		INT_4 detection edge selection	
SM1B	$028			SO1 idle High/Low setting	Serial clock selection
SSR1	$029	*1	*2	DTMF speed setting	
SSR2	$02A	DTMF speed setting		OSC frequency division ratio switching	
	$02B				
DCD0	$02C	Port D_3DCR	Port D_2DCR	Port D_1DCR	Port D_0DCR
DCD1	$02D			Port D_5DCR	Port D_4DCR
DCD2	$02E	Port D_{11}DCR	Port D_{10}DCR	Port D_9DCR	
	$02F				
DCR0	$030	Port $R0_3$DCR	Port $R0_2$DCR	Port $R0_1$DCR	Port $R0_0$DCR
DCR1	$031	Port $R1_3$DCR	Port $R1_2$DCR	Port $R1_1$DCR	Port $R1_0$DCR
DCR2	$032	Port $R2_3$DCR	Port $R2_2$DCR	Port $R2_1$DCR	Port $R2_0$DCR
DCR3	$033	Port $R3_3$DCR	Port $R3_2$DCR	Port $R3_1$DCR	Port $R3_0$DCR
DCR4	$034	Port $R4_3$DCR	Port $R4_2$DCR	Port $R4_1$DCR	Port $R4_0$DCR
	$035				
DCR6	$036	Port $R6_3$DCR	Port $R6_2$DCR	Port $R6_1$DCR	Port $R6_0$DCR
DCR7	$037	Port $R7_3$DCR	Port $R7_2$DCR	Port $R7_1$DCR	Port $R7_0$DCR
DCR8	$038	Port $R8_3$DCR	Port $R8_2$DCR	Port $R8_1$DCR	Port $R8_0$DCR
DCR9	$039	Port $R9_3$DCR	Port $R9_2$DCR	Port $R9_1$DCR	Port $R9_0$DCR
DCRA	$03A			Port RA_1DCR	Port RA_0DCR
	$03B				
	$03C				
	$03D				
	$03E				
V	$03F				Bank setting

: Not used

*1: 32kHz oscillation stop setting

*2: 32kHz frequency division ratio switching

EOL Product

Figure 5 Special Function Register Area

Memory Register (MR) Area ($040–$04F): Consisting of 16 addresses, this area (MR0–MR15) can be accessed by register-register instructions (LAMR and XMRA). The structure is shown in figure 6.

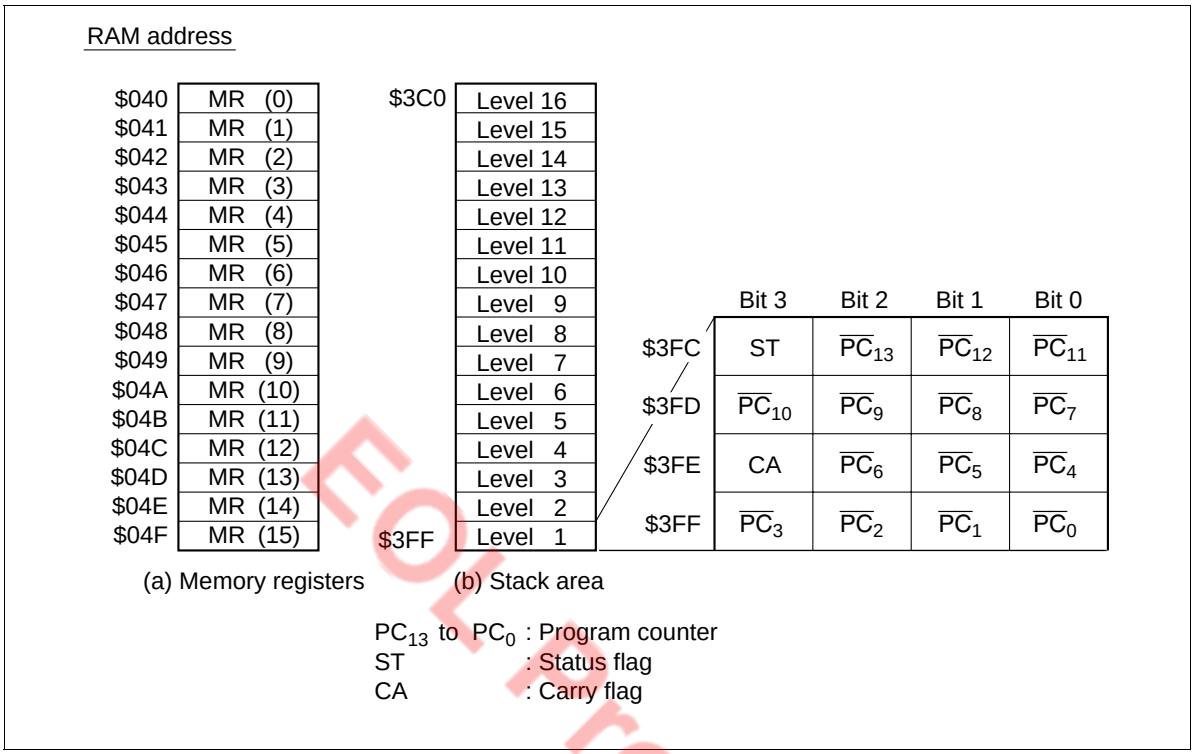

Figure 6 Configuration of Memory Registers and Stack Area, and Stack Position

EOL Product

Data Area ($090–$2EF): 464 digits from $090 to $25F have two banks, which can be selected by setting the bank register (V: $03F). Before accessing this area, set the bank register to the required value (figure 7). The area from $026 to $2EF is accessed without setting the bank register.

Bank register (V: $03F)

Bit	3	2	1	0
Initial value	—	—	—	0
Read/Write	—	—	—	R/W
Bit name	Not used	Not used	Not used	V0

V0	Bank area selection
0	Bank 0 is selected
1	Bank 1 is selected

Note: After reset, the value in the bank register is 0, and therefore bank 0 is selected.

Figure 7 Bank Register (V)

Stack Area ($3C0–$3FF): Used for saving the contents of the program counter (PC), status flag (ST), and carry flag (CA) at subroutine call (CAL or CALL instruction) and for interrupts. This area can be used as a 16-level nesting subroutine stack in which one level requires four digits. The data to be saved and the save conditions are shown in figure 6.

The program counter is restored by either the RTN or RTNI instruction, but the status and carry flags can only be restored by the RTNI instruction. Any unused space in this area is used for data storage.

EOL Product

Functional Description

Registers and Flags

The MCU has nine registers and two flags for CPU operations. They are shown in figure 8 and described below.

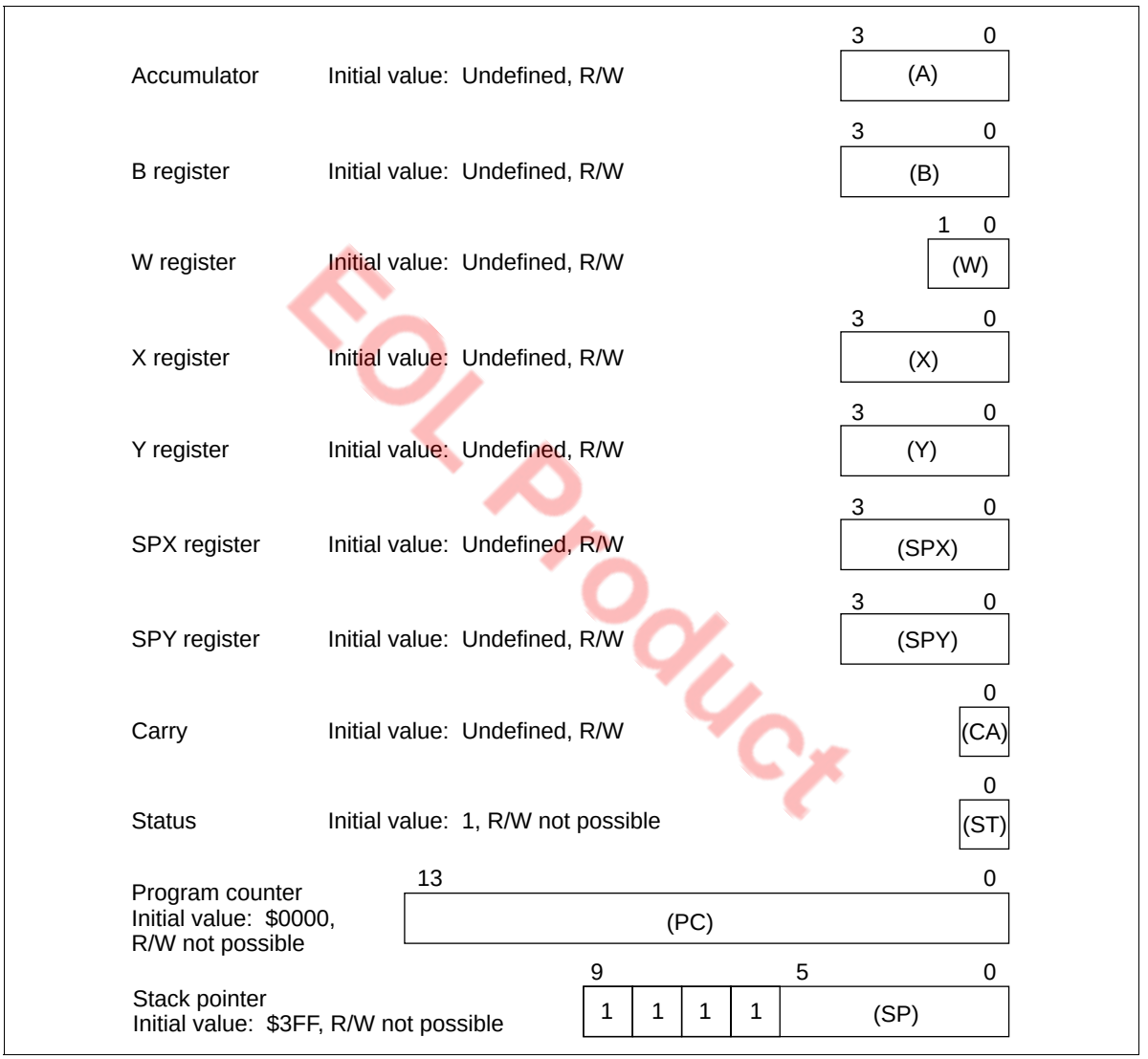

EOL Product

Figure 8 Registers and Flags

Accumulator (A) and B Register (B): A and B are 4-bit registers, and are used to hold the results of ALU (arithmetic and logical unit) operations and to transfer data between memory, I/O ports, and other registers.

W Register (W), X Register (X), and Y Register (Y): W is a 2-bit register and X and Y are 4-bit registers. These registers are used in RAM register indirect addressing. The Y register is also used in D port addressing.

SPX Register (SPX) and SPY Register (SPY): The SPX and SPY registers are 4-bit registers used to supplement the X and Y registers.

Carry Flag (CA): CA is a 1-bit flag that stores ALU overflow generated by an arithmetic operation. CA is set to 1 when an overflow is generated, and is cleared to 0 after operations in which no overflow occurred. CA is also affected by the carry set/carry clear instructions (SEC and REC), and by the rotate with carry instructions (ROTL and ROTR).

During interrupt handling, CA is saved on the stack, and is restored from the stack by the RTNI instruction. (but is not affected by the RTN instruction)

Status Flag (ST): ST is a 1-bit flag that stores the results of arithmetic instructions, compare instructions, and bit test instructions, and is used as the branch condition for the BR, BRL, CAL, and CALL conditional branch instructions.

The contents of the ST flag are held until the next arithmetic, compare, bit test, or conditional branch instruction is executed. After the execution of a conditional branch instruction, the value of ST is set to 1 without regard to the condition.

During interrupt handling, ST is saved on the stack, and is restored from the stack by the RTNI instruction. (but is not affected by the RTN instruction)

Program Counter (PC): The PC is a 14-bit counter that indicates the ROM address of the next instruction the CPU will execute.

Stack Pointer (SP): The SP is a 10-bit register that indicates the RAM address of the next stack frame in the stack area.

The SP is initialized to $3FF by a reset. The SP is decremented by 4 by a subroutine call or by interrupt handling, and is incremented by 4 when the saved data has been restored by a return instruction.

The upper 4 bits of the SP are fixed at 1111; the maximum number of stack levels is thus 16.

In addition to the reset method described above, the SP can also be initialized to $3FF by clearing the reset stack pointer (RSP) in the interrupt control bits area with a RAM bit manipulation instruction, i.e., REM or REMD.

EOL Product

Reset

The MCU can be reset by setting the RESET pin high or by setting the $\overline{\text{STOPC}}$ pin low*. When power is first applied, or when clearing subactive mode, watch mode, or stop mode, the RESET input must be held for at least t_{RC} to assure that the oscillation stabilization time (t_{RC}) condition is fulfilled.
Similarly, the $\overline{\text{STOPC}}$ pin input must held for at least t_{RC} when clearing stop mode with a $\overline{\text{STOPC}}$ pin input to assure that the oscillator stabilizes.
In all other cases, the MCU is reset by a RESET input that is held for at least two instruction execution cycles.

Table 1 lists the section of the MCU that are initialized by a reset and the initial values.

Note: * The $\overline{\text{STOPC}}$ pin reset is only effective in stop mode.

EOL Product

Table 1 Initial Values After MCU Reset

Item		Abbr.	Initial Value	Contents
Program counter		(PC)	$0000	Indicates program execution point from start address of ROM area
Status flag		(ST)	1	Enables conditional branching
Stack pointer		(SP)	$3FF	Stack level 0
Interrupt flags/mask	Interrupt enable flag	(IE)	0	Inhibits all interrupts
	Interrupt request flag	(IF)	0	Indicates there is no interrupt request
	Interrupt mask	(IM)	1	Prevents (masks) interrupt requests
I/O	Port data register	(PDR)	All bits 1	Enables output at level 1
	Data control register	(DCD0)	0000	Turns output buffer off (to high impedance)
	Data control register	(DCD1)	--00	
	Data control register	(DCD2)	000-	
	Data control register	(DCR0–DCR4, DCR6–DCR9)	0000	
	Data control register	(DCRA)	--00	
	Port mode register A	(PMRA)	--00	Refer to description of port mode register A
	Port mode register B	(PMRB)	0000	Refer to description of R port
	Port mode register C bits 3, 1, 0	(PMRC3, PMRC1, PMRC0)	00-	Refer to description of port mode register C
	Detection Edge select registers 1 and 2	(ESR1, 2)	0000	Refer to description of interrupts
Timer/ counters, serial interface	Timer mode register A	(TMA)	0000	Refer to description of timer mode register A section
	Timer mode register C1	(TMC1)	0000	Refer to description of timer mode register C1
	Timer mode register C2	(TMC2)	-000	Refer to description of timer mode register C2
	Timer mode register D1	(TMD1)	0000	Refer to description of timer mode register D1
	Timer mode register D2	(TMD2)	0000	Refer to description of timer mode register D2
	Serial mode register 1A	(SM1A)	0000	Refer to description of serial mode register 1A
	Serial mode register 1B	(SM1B)	--X0	Refer to description of serial mode register 1B
	Prescaler S	(PSS)	$000	Refer to description of prescalers
	Prescaler W	(PSW)	$00	Refer to description of prescalers
	Timer counter A	(TCA)	$00	Refer to description of timer A
	Timer counter C	(TCC)	$00	Refer to description of timer C
	Timer counter D	(TCD)	$00	Refer to description of timer D

EOL Product

Item		Abbr.	Initial Value	Contents
Timer/ counters, serial interface	Timer write register C	(TWCU, L)	$X0	Refer to description of timer write register C
	Timer write register D	(TWDU, L)	$X0	Refer to description of timer write register D
	Serial data register 1	(SR1U, L)	$XX	Refer to description of serial data register 1
	Octal counter	(OC1)	000	Refer to description of serial interface
DTMF	Tone generator mode register	(TGM)	0000	Refer to description of tone generator mode register
	Tone generator control register	(TGC)	000 -	Refer to description of tone generator control register
Comparator	Compare data register	(CDR)	--XX	Refer to description of compare data register
	Compare enable register	(CER)	0-00	Refer to description of compare enable register
Bit registers	Low speed on flag	(LSON)	0	Refer to description of operating modes
	Watchdog timer on flag	(WDON)	0	Refer to description of timer C
	Direct transfer on flag	(DTON)	0	Refer to description of operating modes
	Input capture status flag	(ICSF)	0	Refer to description of timer D
	Input capture error flag	(ICEF)	0	Refer to description of timer D
Others	Miscellaneous register	(MIS)	0000	Refer to description of operating modes and pull-up and pull-down MOS transistor control.
	System clock select register 1 bits 2 to 0	(SSR12 –SSR10)	000	Refer to description of internal oscillator circuit and system clock select register 1 and 2
	System clock select register 2	(SSR2)	0000	Refer to description of internal oscillator circuit and system clock select register 1 and 2
	Bank register	(V)	- - -0	Refer to description of RAM memory map

Notes: 1. The statuses of other registers and flags after MCU reset are shown in the following table.
2. X indicates invalid value. – indicates that the bit does not exist.

Item	Abbr.	Status After Cancel-lation of Stop Mode by $\overline{\text{STOPC}}$ Input	Status After all Other Types of Reset
Carry flag	(CA)	Pre-stop-mode values are not guaranteed; values must be initialized by program	Pre-MCU-reset values are not guaranteed; values must be initialized by program
Accumulator	(A)		
B register	(B)		
W register	(W)		
X/SPX register	(X/SPX)		
Y/SPY register	(Y/SPY)		
RAM		Pre-stop-mode values are retained	
RAM enable flag	(RAME)	1	0
Port mode register C bit 2	(PMRC2)	Pre-stop-mode values are retained	0
System clock select register 1 bit 3	(SSR13)		

EOL Product

Interrupts

The MCU has 9 interrupt sources: five external signals ($\overline{INT_0}$, $\overline{INT_1}$, INT_2–INT_4), three timer/ counters (timers A, C, and D), serial interface (Serial 1).

An interrupt request flag (IF), interrupt mask (IM), and vector address are provided for each interrupt source, and an interrupt enable flag (IE) controls the entire interrupt process.

As vector addresses are shared by interrupt sources timer C and INT_3, and timer D and INT_4, so the type of request that has occurred must be checked at the beginning of interrupt processing.

Interrupt Control Bits and Interrupt Processing: Locations $000 to $003 and $022 to $023 in RAM are reserved for the interrupt control bits which can be accessed by RAM bit manipulation instructions.

The interrupt request flag (IF) cannot be set by software. MCU reset initializes the interrupt enable flag (IE) and the IF to 0 and the interrupt mask (IM) to 1.

A block diagram of the interrupt control circuit is shown in figure 9, interrupt priorities and vector addresses are listed in table 2, and interrupt processing conditions for the 9 interrupt sources are listed in table 3.

An interrupt request occurs when the IF is set to 1 and the IM is set to 0. If the IE is 1 at that point, the interrupt is processed. A priority programmable logic array (PLA) generates the vector address assigned to that interrupt source.

The interrupt processing sequence is shown in figure 10 and an interrupt processing flowchart is shown in figure 11. After an interrupt is acknowledged, the previous instruction is completed in the first cycle. The IE is reset in the second cycle, the carry, status, and program counter values are pushed onto the stack during the second and third cycles, and the program jumps to the vector address to execute the instruction in the third cycle.

Program the JMPL instruction at each vector address, to branch the program to the start address of the interrupt program, and reset the IF by a software instruction within the interrupt program.

EOL Product

Table 2 Vector Addresses and Interrupt Priorities

Reset/Interrupt	Priority	Vector Address
RESET, $\overline{STOPC}$*	—	$0000
$\overline{INT_0}$	1	$0002
$\overline{INT_1}$	2	$0004
Timer A	3	$0006
INT_2	4	$0008
Timer C, INT_3	5	$000A
Timer D, INT_4	6	$000C
Serial 1	7	$000E

Note: * The $\overline{STOPC}$ interrupt request is valid only in stop mode.

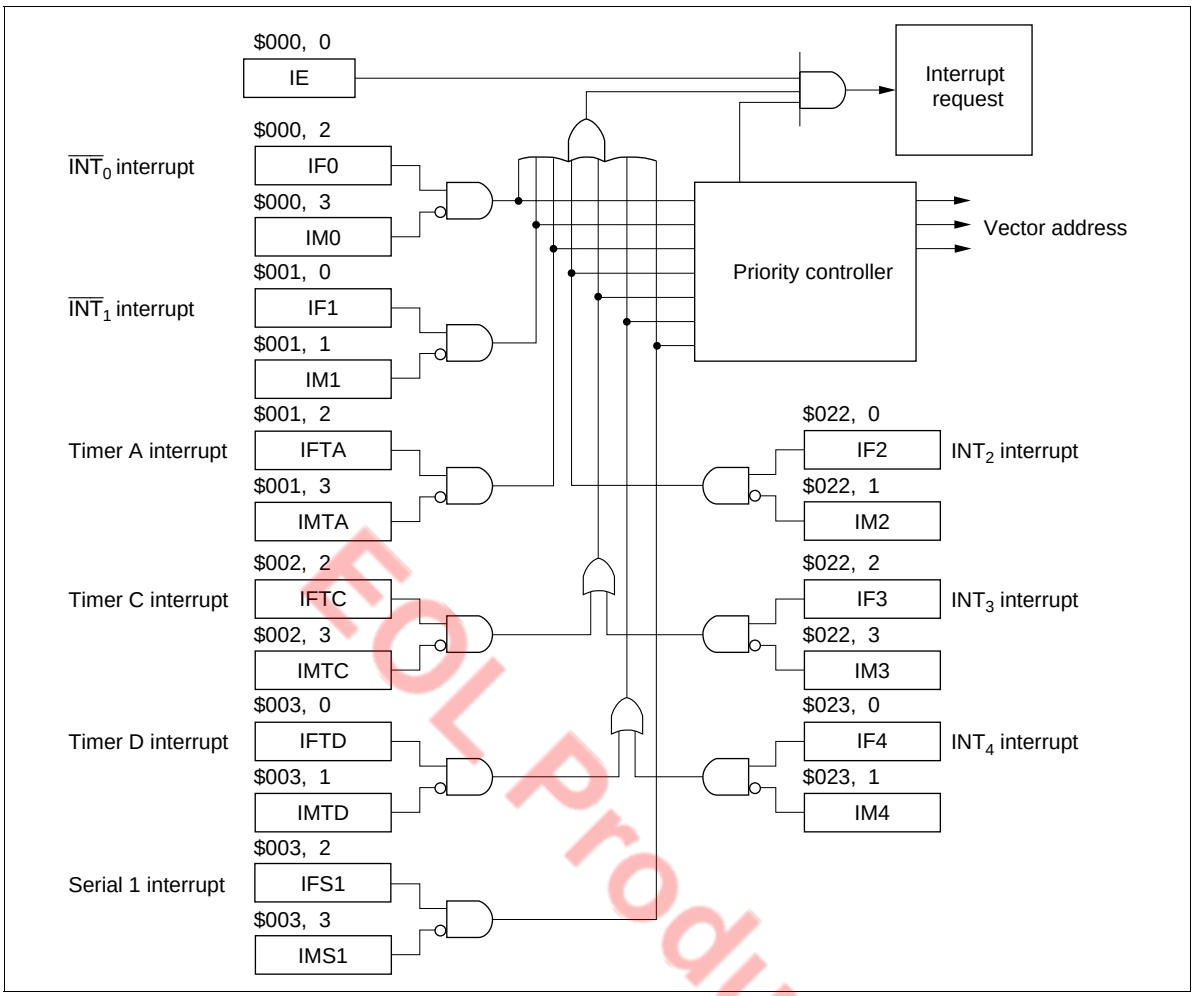

Figure 9 Interrupt Control Circuit

EOL Product

Table 3 Interrupt Processing and Activation Conditions

Interrupt Cuntrol Bit	Interrupt Source						
	$\overline{INT_0}$	$\overline{INT_1}$	Timer A	INT_2	Timer C or INT_3	Timer D or INT_4	Serial 1
IE	1	1	1	1	1	1	1
IF0 · $\overline{IM0}$	1	0	0	0	0	0	0
IF1 · $\overline{IM1}$	*	1	0	0	0	0	0
IFTA · $\overline{IMTA}$	*	*	1	0	0	0	0
IF2 · $\overline{IM2}$	*	*	*	1	0	0	0
IFTC · $\overline{IMTC}$ + IF3 · $\overline{IM3}$	*	*	*	*	1	0	0
IFTD · $\overline{IMTD}$ + IF4 · $\overline{IM4}$	*	*	*	*	*	1	0
IFS1 · $\overline{IMS_1}$	*	*	*	*	*	*	1

Note: Bits marked * can be either 0 or 1. Their values have no effect on operation.

EOL Product

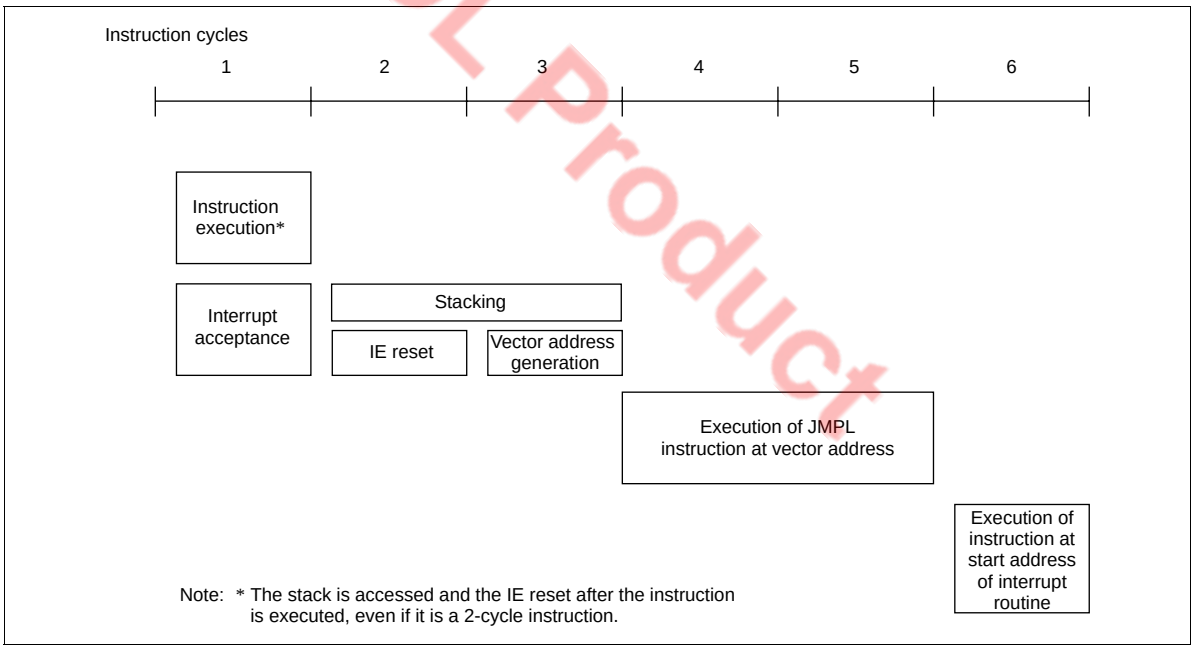

Figure 10 Interrupt Sequence

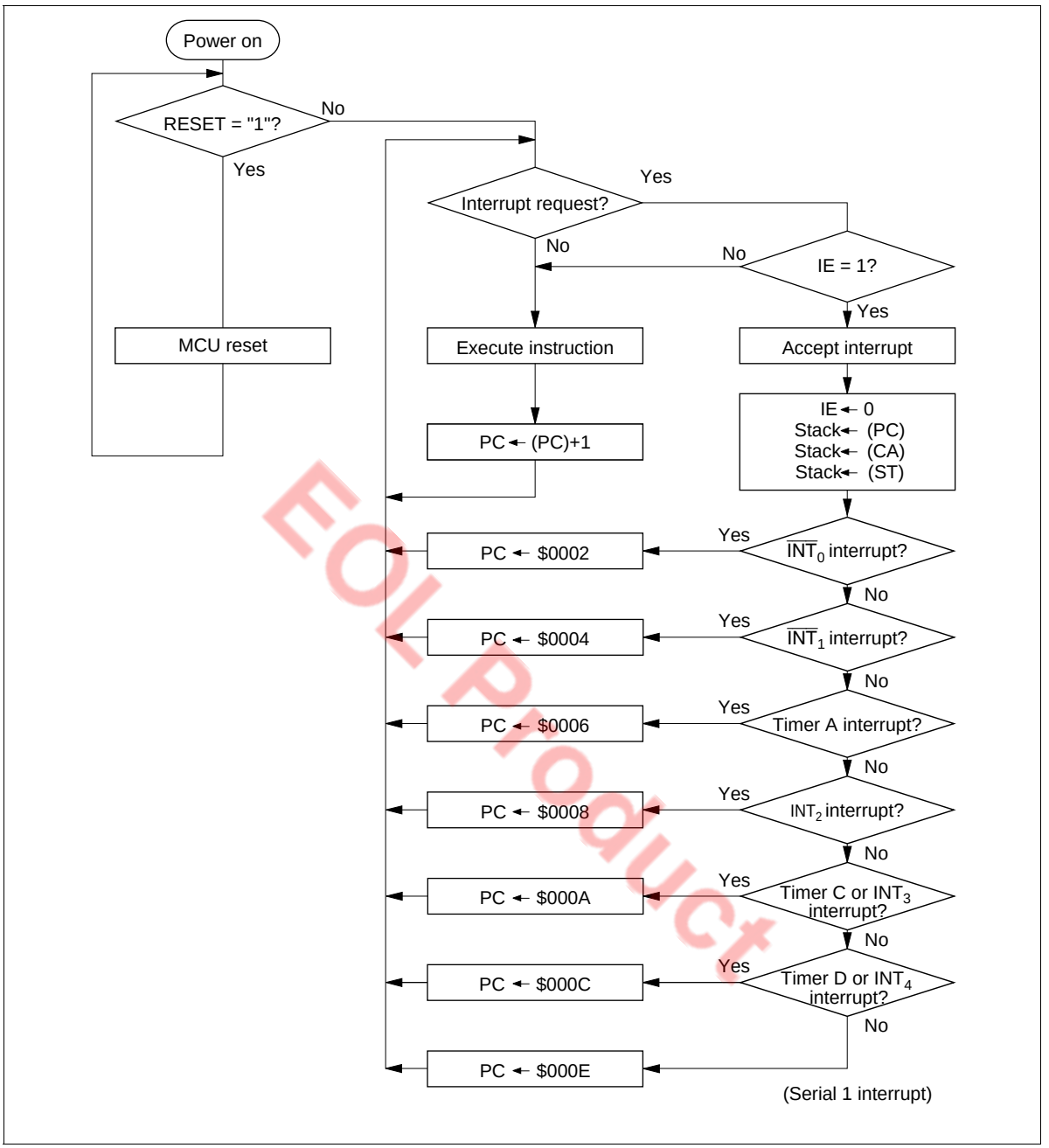

EOL Product

Figure 11 Interrupt Processing Flowchart

Interrupt Enable Flag (IE: $000, Bit 0): Controls the entire interrupt process. It is reset by the interrupt processing and set by the RTNI instruction, as listed in table 4.

Table 4 Interrupt Enable Flag (IE: $000, Bit 0)

IE	Interrupt Enabled/Disabled
0	Disabled
1	Enabled

External Interrupt Request Flags (IF0–IF4: $000, $001, $022, $023): IF0 and IF1 are set at the falling edge of signals input to $\overline{INT_0}$ and $\overline{INT_1}$, and IF2–IF4 are set at the rising or falling edge of signals input to INT_2–INT_4, as listed in table 5. The INT_2–INT_4 interrupt edges are selected by the detection edge select registers (ESR1, ESR2: $026, $027) as shown in figures 12 and 13.

EOL Product

Detection edge selection register 1 (ESR1: $026)

Bit	3	2	1	0
Initial value	0	0	0	0
Read/Write	W	W	W	W
Bit name	ESR13	ESR12	ESR11	ESR10

ESR13	ESR12	INT_3 detection edge
0	0	No detection
	1	Falling-edge detection
1	0	Rising-edge detection
	1	Falling/Rising-edge detection

ESR11	ESR10	INT_2 detection edge
0	0	No detection
	1	Falling-edge detection
1	0	Rising-edge detection
	1	Falling/Rising-edge detection

Figure 12 Detection Edge Selection Register 1 (ESR1)

Detection edge selection register 2 (ESR2: $027)

Bit	3	2	1	0
Initial value	0	0	0	0
Read/Write	W	W	W	W
Bit name	ESR23	ESR22	ESR21	ESR20

ESR23	ESR22	EVND detection edge
0	0	No detection
	1	Falling-edge detection
1	0	Rising-edge detection
	1	Falling/Rising-edge detection

ESR21	ESR20	INT_4 detection edge
0	0	No detection
	1	Falling-edge detection
1	0	Rising-edge detection
	1	Falling/Rising-edge detection

Figure 13 Detection Edge Selection Register 2 (ESR2)

EOL Product

Table 5 External Interrupt Request Flags (IF0–IF4: $000, $001, $022, $023)

IF0–IF4	Interrupt Request
0	No
1	Yes

External Interrupt Masks (IM0–IM4: $000, $001, $022, $023): Prevent (mask) interrupt requests caused by the corresponding external interrupt request flags, as listed in table 6.

Table 6 External Interrupt Masks (IM0–IM4: $000, $001, $022, $023)

IM0–IM4	Interrupt Request
0	Enabled
1	Disabled (masked)

Timer A Interrupt Request Flag (IFTA: $001, Bit 2): Set by overflow output from timer A, as listed in table 7.

Table 7 Timer A, C, D Interrupt Request Flags (IFTA: $001, Bit 2, IFTC: $002, Bit 2, IFTD: $003, Bit 0)

Timer A, C, D Interrupt Request Flags (IFTA, IFTC, IFTD)	Interrupt Request
0	No
1	Yes

Timer A Interrupt Mask (IMTA: $001, Bit 3): Prevents (masks) an interrupt request caused by the timer A interrupt request flag, as listed in table 8.

Table 8 Timer A, C, D Interrupt Masks (IMTA: $001, Bit 3, IMTC: $002, Bit 3, IMTD: $003, Bit 1)

Timer A, C, D Interrupt Masks (IMTA, IMTC, IMTD)	Interrupt Request
0	Enabled
1	Disabled (masked)

EOL Product

Timer C Interrupt Request Flag (IFTC: $002, Bit 2): Set by overflow output from timer C, as listed in table 7.

Timer C Interrupt Mask (IMTC: $002, Bit 3): Prevents (masks) an interrupt request caused by the timer C interrupt request flag, as listed in table 8.

Timer D Interrupt Request Flag (IFTD: $003, Bit 0): Set by overflow output from timer D, or by the rising or falling of signals input to EVND when the input capture function is used, as listed in table 7.

Timer D Interrupt Mask (IMTD: $003, Bit 1): Prevents (masks) an interrupt request caused by the timer D interrupt request flag, as listed in table 8.

Serial 1 Interrupt Request Flag (IFS1: $003, Bit 2): Set when data transfer is completed or when data transfer is suspended, as listed in table 9.

Table 9 Serial 1 Interrupt Request Flag (IFS1: $003, Bit 2)

IFS1	Interrupt Request
0	No
1	Yes

Serial 1 Interrupt Mask (IMS1: $003, Bit 3): Prevents (masks) an interrupt request caused by the serial 1 interrupt request flag, as listed in table 10.

Table 10 Serial 1 Interrupt Mask (IMS1: $003, Bit 3)

IMS1	Interrupt Request
0	Enabled
1	Disabled (masked)

EOL Product

Operating Modes

The MCU has five operating modes as shown in table 11. The operations in each mode are listed in table 12. Transitions between operating modes are shown in figure 14.

Table 11 Operating Modes and Clock Status

		Mode Name				
		Active	**Standby**	**Stop**	**Watch**	**Subactive*2**
Activation method		RESET cancellation, interrupt request, $\overline{\text{STOPC}}$ cancellation in stop mode, STOP/SBY instruction in subactive mode (when direct transfer is selected)	SBY instruction	STOP instruction when TMA3 = 0	STOP instruction when TMA3 = 1 STOP/SBY instruction in subactive mode (except when direct transition is specified)	$\overline{\text{INT}}_0$ or timer A interrupt request from watch mode when LSON = 1
Status	System oscillator	Operation	Operation	Stopped	Stopped	Stopped
	Subsystem oscillator	Operation	Operation	*1	Operation	Operation
Cancellation method		RESET input, STOP/SBY instruction	RESET input, interrupt request	RESET input, $\overline{\text{STOPC}}$ input	RESET input, $\overline{\text{INT}}_0$ or timer A interrupt request	RESET input, STOP/SBY instruction

Notes: 1. Operating or stopping the oscillator can be selected by setting bit 3 of the system clock select register (SSR: $029).
2. Subactive mode is an optional function; specify it on the function option list.

EOL Product

Table 12 Operations in Low-Power Dissipation Modes

Function	Stop Mode	Watch Mode	Standby Mode	Subactive Mode*2
CPU	Reset	Retained	Retained	Operation
RAM	Retained	Retained	Retained	Operation
Timer A	Reset	Operation	Operation	Operation
Timer C	Reset	Stopped	Operation	Operation
Timer D	Reset	Stopped	Operation	Operation
Serial interface 1	Reset	Stopped *1	Operation	Operation
DTMF	Reset	Reset	Operation	Reset
Comparator	Reset	Stopped	Stopped	Operation
I/O	Reset (high-impedance)	Retained	Retained	Operation

Notes: 1. When a clock is input in external clock mode, transmit/receive operations are performed, but interrupt operations are halted.
2. Subactive mode is a function option, and should be specified in the function option list.

EOL Product

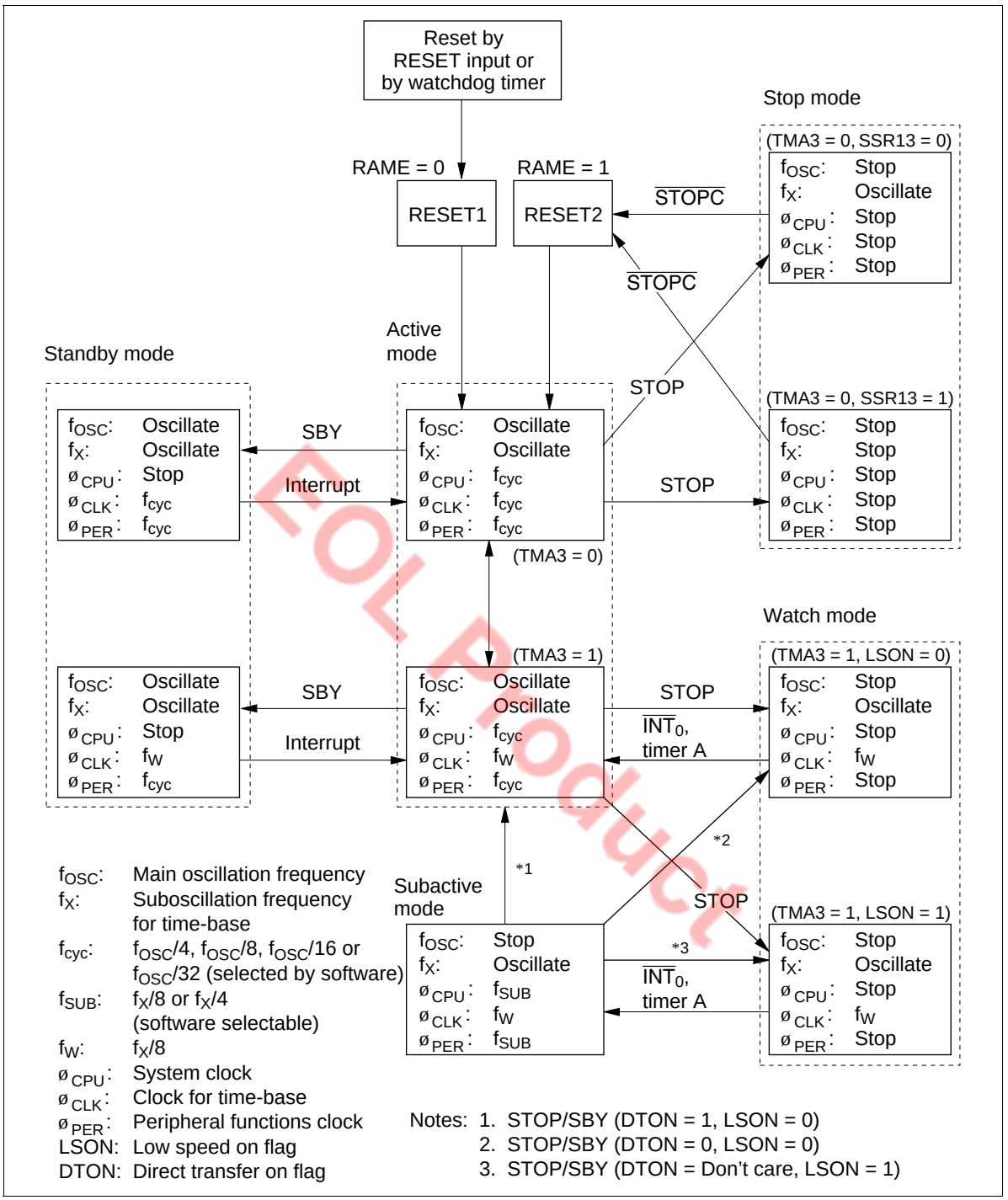

EOL Product

Figure 14 MCU Status Transitions

Active Mode: All MCU functions operate according to the clock generated by the system oscillator OSC_1 and OSC_2.

Standby Mode: In standby mode, the oscillators continue to operate, but the clocks related to instruction execution stop. Therefore, the CPU operation stops, but all RAM and register contents are retained, and the D or R port status, when set to output, is maintained. Peripheral functions such as interrupts, timers, and serial interface continue to operate. The power dissipation in this mode is lower than in active mode because the CPU stops. (Interrupts, timers, the serial interface, and other peripheral functions continue to operate. The exception is the comparator, which is halted.)

The MCU enters standby mode when the SBY instruction is executed in active mode.

Standby mode is terminated by a RESET input or an interrupt request. If it is terminated by RESET input, the MCU is reset as well. After an interrupt request, the MCU enters active mode and executes the next instruction after the SBY instruction. If the interrupt enable flag is 1, the interrupt is then processed; if it is 0, the interrupt request is left pending and normal instruction execution continues. Figure 15 shows a flowchart of MCU operation.

EOL Product

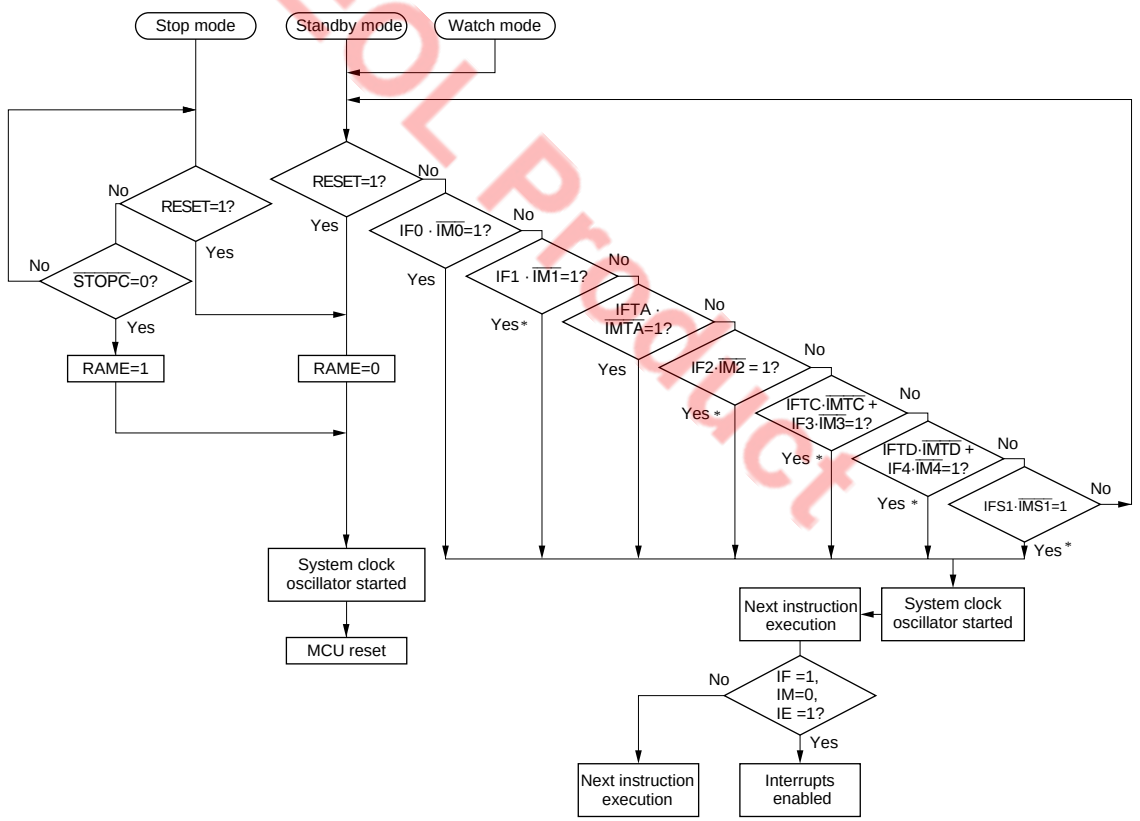

Note: * Only when clearing from standby mode.

Figure 15 MCU Operation Flowchart

Stop Mode: In stop mode, all MCU operations stop and RAM data is retained. Therefore, the power dissipation in this mode is the least of all modes. The OSC_1 and OSC_2 oscillator stops. For the X1 and X2 oscillator to operate or stop can be selected by setting bit 3 of the system clock select register 1 (SSR1: $029; operating: SSR13 = 0, stop: SSR3 = 1) (figure 24). The MCU enters stop mode if the STOP instruction is executed in active mode when bit 3 of timer mode register A (TMA: $008) is set to 0 (TMA3 = 0) (figure 40).

Stop mode is cleared by a RESET or $\overline{STOPC}$* input. The RESET or $\overline{STOPC}$ input must be held for at least the oscillation stabilization time (t_{RC}) as shown in figure 16. (refer to the "AC Characteristics" section.) In either of these cases, the MCU will start program execution from the program start address (location 0). However, the value of the RAM enable flag (RAME: $021,3) will be different in these cases. In particular, RAME will be set to 0 for a RESET input and will be set to 1 for a $\overline{STOPC}$ input.

Also note that while a RESET input is effective in all MCU modes, $\overline{STOPC}$ is only effective in stop mode, and is ignored in all other modes.

If a program needs to determine if stop mode was cleared by a $\overline{STOPC}$ input (for example, if the program intends to use the contents of RAM that were stored before stop mode was entered after returning to active mode) the program should test the RAM enable flag with a TEST instruction at the start of the program.

Note: * If stop mode is to be cleared by a $\overline{STOPC}$ input, applications should set bit 2 of port mode register C (PMRC) to 1 (PMRC2 = 1) before switching to stop mode.

EOL Product

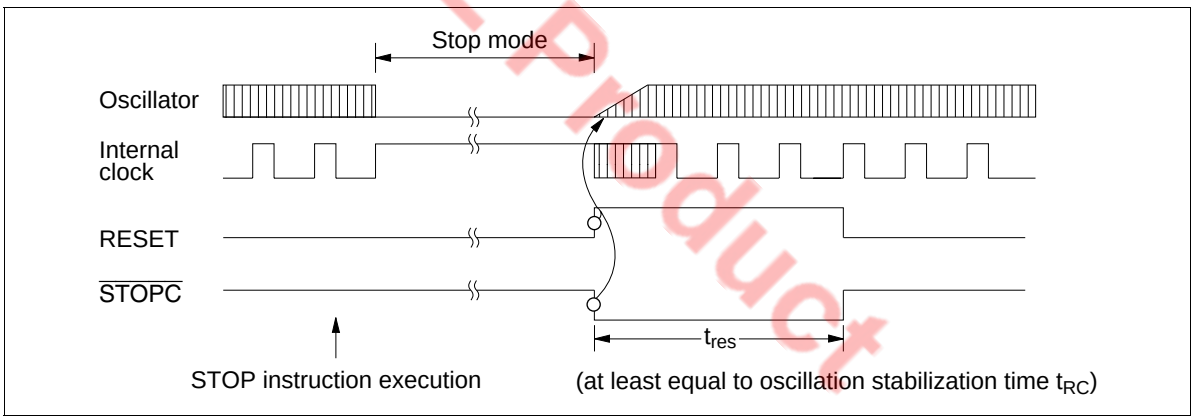

Figure 16 Timing of Stop Mode Cancellation

Watch Mode: In watch mode, the clock function (timer A) using the X1 and X2 oscillator, but other function operations stop. Therefore, the power dissipation in this mode is the second least to stop mode, and this mode is convenient when only clock display is used. In this mode, the OSC_1 and OSC_2 oscillator stops, but the X1 and X2 oscillator operates. The MCU is switched to watch mode by executing a STOP instruction while TMA3 = 1 in active mode, or by executing a STOP/SBY instruction while LSON is set to 1 or DTON is cleared to 0 in subactive mode.

Watch mode is terminated by a RESET input or a timer-A/$\overline{INT_0}$ interrupt request. For details of RESET input, refer to the Stop Mode section. When terminated by a timer-A/$\overline{INT_0}$ interrupt request, the MCU enters active mode if LSON = 0, or subactive mode if LSON = 1. After an interrupt request is generated, the time required to enter active mode is t_{RC} for a timer A interrupt, and T_X (where $T + t_{RC} < T_X < 2T + t_{RC}$) for an $\overline{INT_0}$ interrupt, as shown in figures 17 and 18.

Operation during mode transition is the same as that at standby mode cancellation (figure 15).

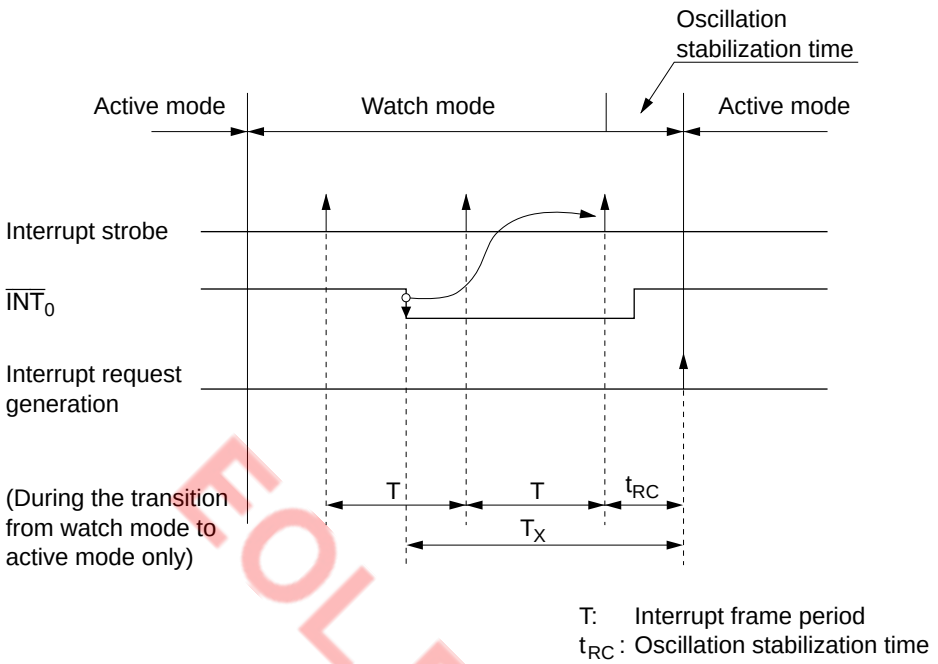

Note: If the time from the fall of the $\overline{INT}_0$ signal until the interrrupt is accepted and active mode is entered is designated Tx, then Tx will be in the following range:
$T + t_{RC} < T_x < 2T + t_{RC}$

Figure 17 Interrupt Frame

EOL Product

Subactive Mode: The OSC_1 and OSC_2 oscillator stops and the MCU operates with a clock generated by the X1 and X2 oscillator. In this mode, functions other than the DTMF generation circuit operate, but since the operating clocks are slow, power consumption is the lowest after watch mode.

The CPU instruction execution speed can be selected as 244 µs or 122 µs by setting bit 2 (SSR12) of the system clock select register (SSR1: $029). Note that the SSR12 value must be changed in active mode. If the value is changed in subactive mode, the MCU may malfunction.

When the STOP or SBY instruction is executed in subactive mode, the MCU enters either watch or active mode, depending on the statuses of the low speed on flag (LSON: $020, bit 0) and the direct transfer on flag (DTON: $020, bit 3).

Subactive mode is an optional function that the user must specify on the function option list.

Interrupt Frame: In watch and subactive modes, ϕ_{CLK} is applied to timer A and the $\overline{INT}_0$ circuit. Prescaler W and timer A operate as the time-base and generate the timing clock for the interrupt frame. Three interrupt frame periods (T) can be selected by setting the miscellaneous register (MIS: $00C) (figure 18).

In watch and subactive modes, the timer-A/$\overline{INT}_0$ interrupt is generated synchronously with the interrupt frame. The interrupt request is generated synchronously with the interrupt strobe timing except during transition to active mode. An overflow and interrupt request in timer A is generated synchronously with the interrupt strobe timing.

EOL Product

Miscellaneous register (MIS: $00C)

Bit	3	2	1	0
Initial value	0	0	0	0
Read/Write	W	W	W	W
Bit name	MIS3	MIS2	MIS1	MIS0

MIS3	MIS2	MIS1	MIS0	T*1	t_{RC}*1	Oscillation circuit conditions
Buffer control. See figure 37 in the pull-up and pull-down MOS transistor control section		0	0	0.24414 ms	0.12207 ms 0.24414 ms*2	External clock input
		0	1	15.625 ms	7.8125 ms	Ceramic oscillator
		1	0	62.5 ms	31.25 ms	Crystal oscillator
		1	1	Not used	Not used	—

Notes: 1. Values of T and t_{RC} when a 32.768-kHz crystal oscillator is used to pins x1 and x2.
2. The value is applied only when direct transfer operation is used.

Figure 18 Miscellaneous Register (MIS)

Direct Transition from Subactive Mode to Active Mode: Available by controlling the direct transfer on flag (DTON: $020, bit 3) and the low speed on flag (LSON: $020, bit 0). The procedures are described below:

- Set LSON to 0 and DTON to 1 in subactive mode.
- Execute the STOP or SBY instruction.
- The MCU automatically enters active mode from subactive mode after waiting for the MCU internal processing time and oscillation stabilization time (figure 19).

Notes: 1. The DTON flag can be set only in subactive mode. It is always reset in active mode.
2. The transition time (T_D) from subactive mode to active mode:
$t_{RC} < T_D < T + t_{RC}$

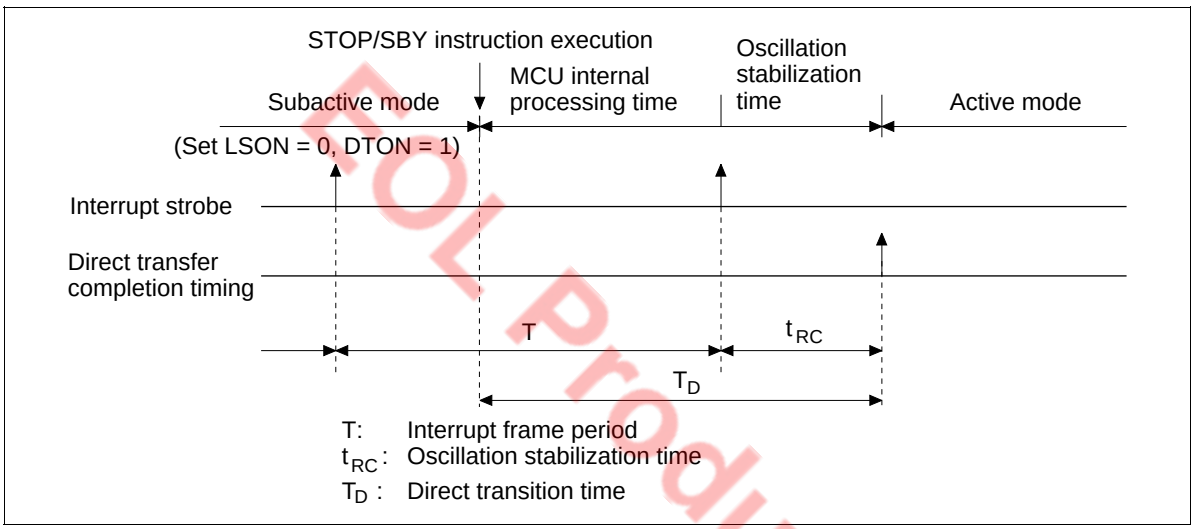

Figure 19 Direct Transition Timing

MCU Operation Sequence: The MCU operates in the sequence shown in figure 20. It is reset by an asynchronous RESET input, regardless of its status.

With the IE flag cleared and an interrupt request flag set together with its interrupt mask cleared, if a STOP/SBY instruction is executed, the instruction is cancelled (regarded as an NOP) and the following instruction is executed. Before executing a STOP/SBY instruction, make sure all interrupt request flags are cleared or all interrupts are masked.

EOL Product

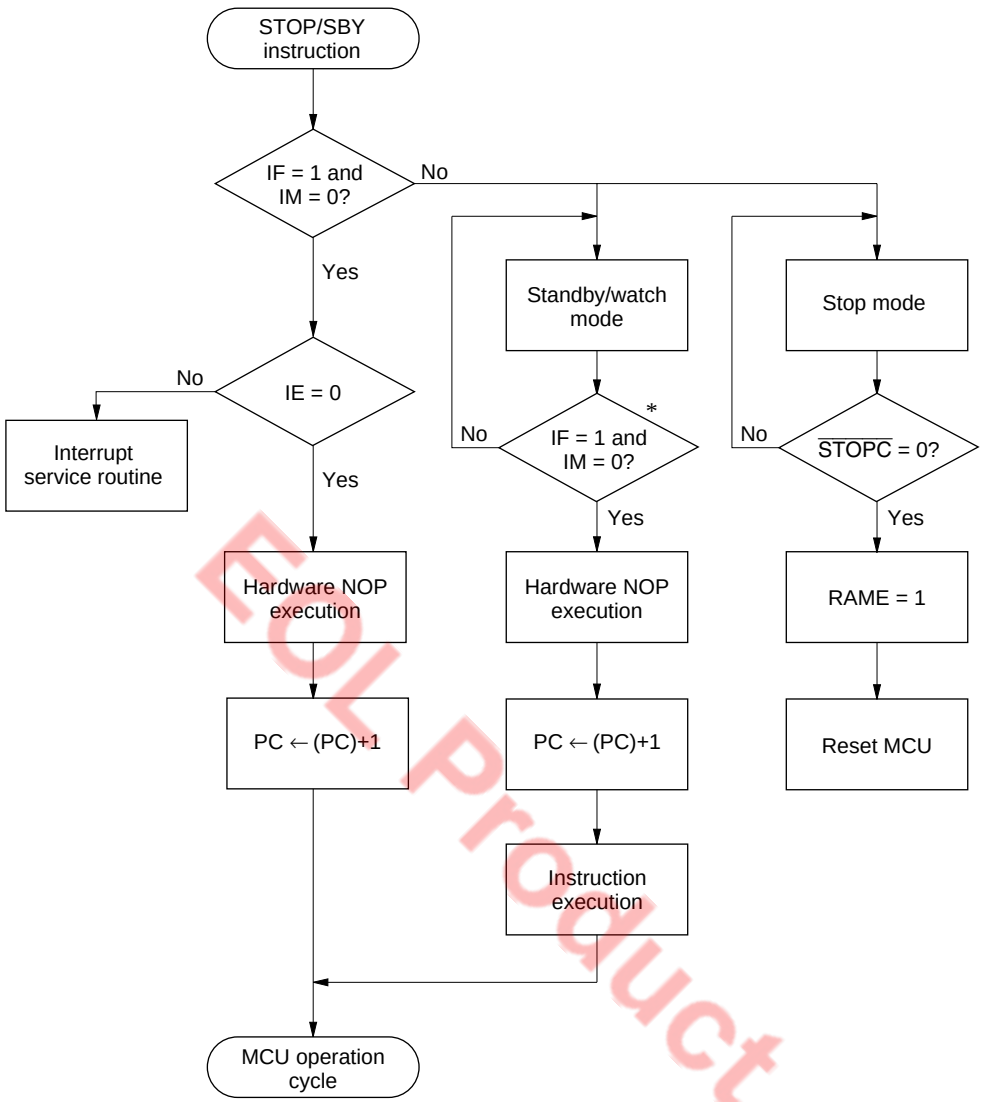

Note: * Refer to figure 15, Flowchart for Exiting Low Power Modes, for IF and IM operation.

EOL Product

Figure 20 MCU Operating (Low-Power Mode Operation)

Notes: When the MCU is in watch mode or subactive mode, if the high level period before the falling edge of $\overline{INT_0}$ is shorter than the interrupt frame, $\overline{INT_0}$ is not detected. Also, if the low level period after the falling edge of $\overline{INT_0}$ is shorter than the interrupt frame, $\overline{INT_0}$ is not detected.

Edge detection is shown in figure 21. The level of the $\overline{INT_0}$ signal is sampled by a sampling clock. When this sampled value changes to low from high, a falling edge is detected.

In figure 22(a), the level of the $\overline{INT_0}$ signal is sampled by an interrupt frame. In (a) the sampled value is low at point A, and also low at point B. Therefore, a falling edge is not detected. In (b), the sampled value is high at point A, and also high at point B. A falling edge is not detected in this case either.

When the MCU is in watch mode or subactive mode, keep the high level and low level period of $\overline{INT_0}$ longer than interrupt frame.

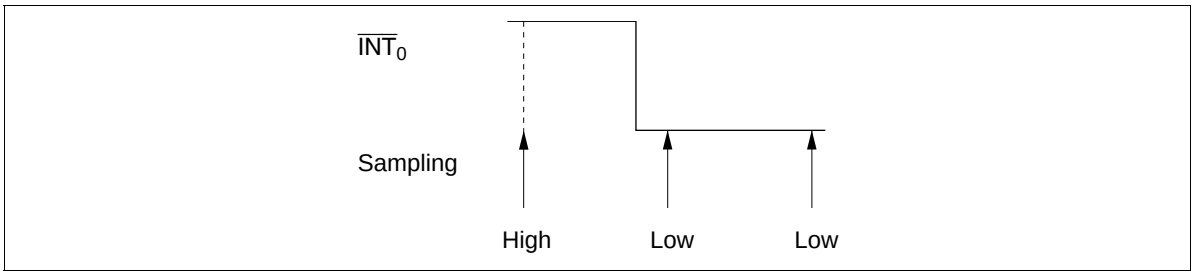

Figure 21 Edge Detection

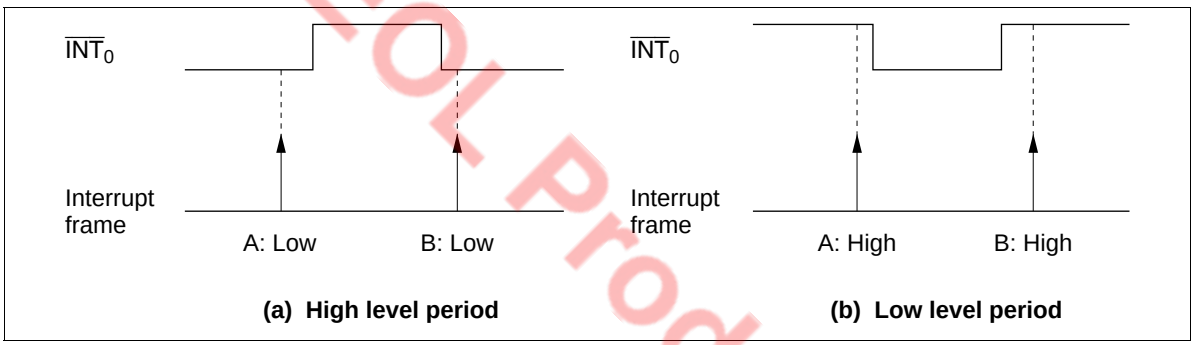

Figure 22 Sampling Example

EOL Product

Internal Oscillator Circuit

A block diagram of the clock generation circuit is shown in figure 23. As shown in table 13, a ceramic oscillator or crystal oscillator can be connected to OSC_1 and OSC_2, and a 32.768-kHz oscillator can be connected to X1 and X2. The system oscillator can also be operated by an external clock. Set bits 0 and 1 (SSR10, SSR11) of system clock select register 1 (SSR1: $029) and bits 2 and 3 (SSR22, SSR23) of system clock select register 2 (SSR2: $02A) according to the frequency of the oscillator connected to OSC_1 and OSC_2 (figures 24 and 25).

The system clock division ratio can be set with bits 0 and 1 (SSR20, SSR21) of system clock select register 2 (SSR2: $02A). The value set in these bits does not become valid until watch mode is entered. Therefore, the system clock must be halted temporarily when changing the division ratio.

The system clock division ratio immediately after a reset or when stop mode is cleared can be selected by means of the SEL pin level, division-by-4 being selected when the SEL pin is at Vcc potential, and division-by-32 when at GND potential.

Note: If the system clock select register 1 and 2 (SSR1, SSR2: $029, $02A) setting does not match the oscillator frequency, DTMF generation circuit and subsystems using the 32.768-kHz oscillation will malfunction.

EOL Product

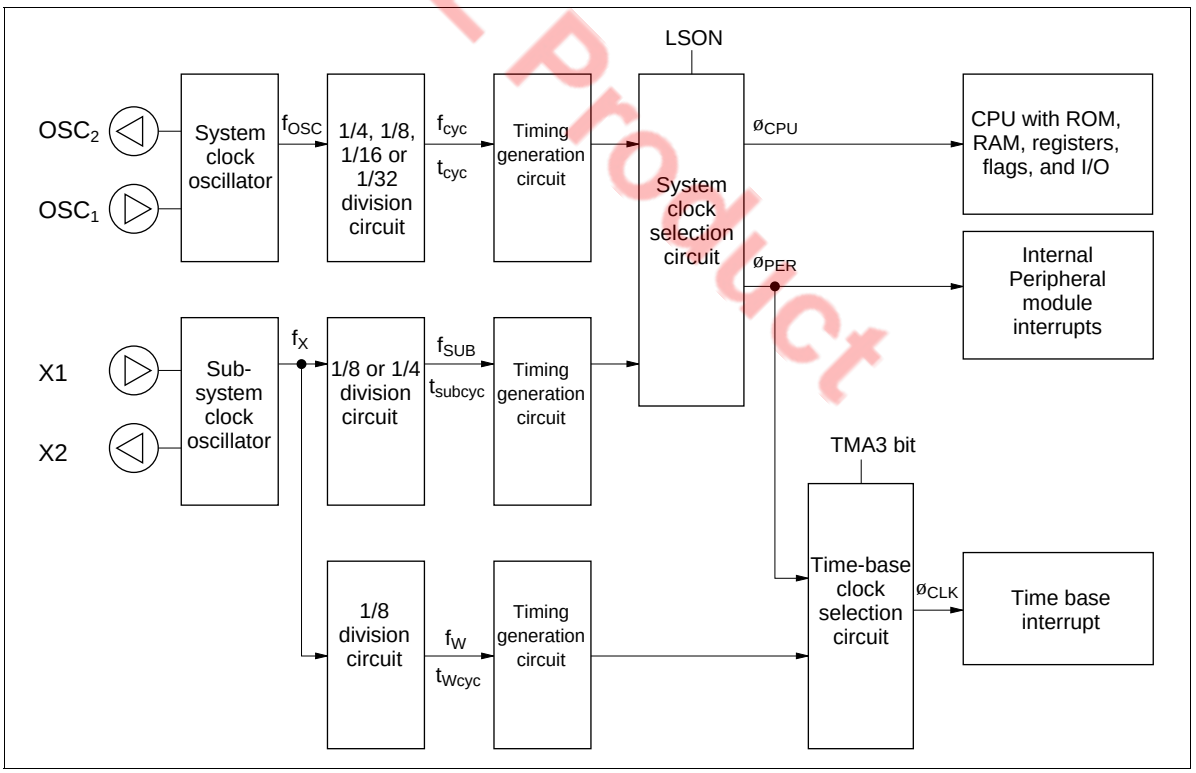

Figure 23 Clock Generation Circuit

System clock select register 1 (SSR1: $029)

Bit	3	2	1	0
Initial value	0	0	0	0
Read/Write	W	W	W	W
Bit name	SSR13	SSR12	SSR11	SSR10

SSR13	32-kHz oscillation stop
0	Oscillation operates in stop mode
1	Oscillation stops in stop mode

SSR12	32-kHz oscillation division ratio selection
0	$f_{SUB} = f_X/8$
1	$f_{SUB} = f_X/4$

SSR23	SSR22	SSR11	SSR10	System clock selection
0	0	0	0	400 kHz
			1	800 kHz
		1	0	2 MHz
			1	4 MHz
	1	×	×	3.58 MHz
1	0	1	1	8 MHz
	1	×	×	7.16 MHz

Note: SSR13 is cleared only by a RESET input. SSR13 will not be cleared by a $\overline{\text{STOPC}}$ input during stop mode, and will retain its value.
SSR13 will also not be cleared upon entering stop mode.

Figure 24 System Clock Select Register 1 (SSR1)

System clock select register 2 (SSR2: $02A)

Bit	3	2	1	0
Initial value	0	0	0	0
Read/Write	W	W	W	W
Bit name	SSR23	SSR22	SSR21	SSR20

SSR23	SSR22	System clock selection*2
0	0	Selected from 400 kHz, 800 kHz, 2 MHz, 4 MHz
	1	3.58MHz
1	0	8MHz
	1	7.16MHz

SSR21	SSR20	System clock division ratio selection*1
0	0	Division by 4
	1	Division by 8
1	0	Division by 16
	1	Division by 32

Notes : *1 The DTMF generation circuit frequencies are not affected by the system clock division ratio setting.
*2 See system clock select register 1 (SSR1).

Figure 25 System Clock Select Register 2 (SSR2)

EOL Product

Table 13 Oscillator Circuit Examples

	Circuit Configuration	Circuit Constants
External clock operation	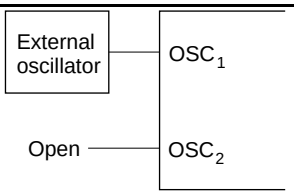	—
Ceramic oscillator (OSC_1, OSC_2)	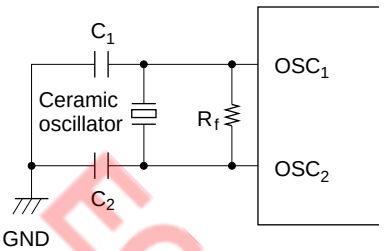	Ceramic oscillator: CSB400P22 (Murata) CSB400P (Murata) R_f = 1 MΩ ± 20% $C_1 = C_2$ = 220 pF ± 5% Ceramic oscillator: CSB800J122 (Murata), CSB800J (Murata) R_f = 1 MΩ ± 20% $C_1 = C_2$ = 220 pF ± 5% Ceramic oscillator: CSA2.00MG (Murata) R_f = 1 MΩ ± 20% $C_1 = C_2$ = 30 pF ± 20% Ceramic oscillator: CSA4.00MG (Murata) R_f = 1 MΩ ± 20% $C_1 = C_2$ = 30 pF ± 20% Ceramic oscillator: CSA3.58MG (Murata) R_f = 1 MΩ ± 20% $C_1 = C_2$ = 30 pF ± 20% Ceramic oscillator: CSA8.00MT (Murata) R_f = 1 MΩ ± 20% $C_1 = C_2$ = 30 pF ± 20%
Crystal oscillator (OSC_1, OSC_2)	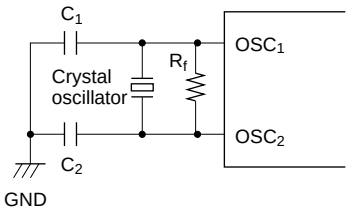 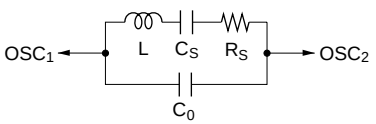	R_f = 1 MΩ ± 20% $C_1 = C_2$ = 10 to 22pF ± 20% Crystal oscillator: Equivalent circuit at left C_0 =7pF max R_S = 100Ω max f = 400kHz, 800kHz, 2MHz, 3.58MHz, 4MHz, 7.16MHz, 8MHz

EOL Product

	Circuit Configuration	Circuit Constants
Crystal oscillator (X1, X2)	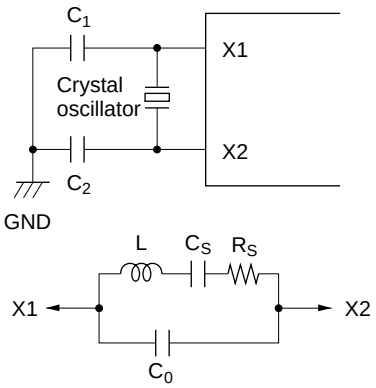	Crystal oscillator: 32.768 kHz: MX38T (Nippon Denpa) $C_1 = C_2 = 20$ pF ± 20% R_S=14 kΩ C_0=1.5 pF

Notes: 1. Circuit constants differ by the different types of crystal oscillators, ceramic oscillators, and with the stray capacitance of the board, so consult the manufacturer of the oscillator to determine the circuit parameters.

2. The wiring between the OSC_1, OSC_2 (X1 and X2 pins), and the other elements should be as short as possible, and must not cross other wiring. Refer to figure 26.

3. If not using a 32.768-kHz crystal oscillator, fix the X1 pin to V_{CC} and leave the X2 pin open.

EOL Product

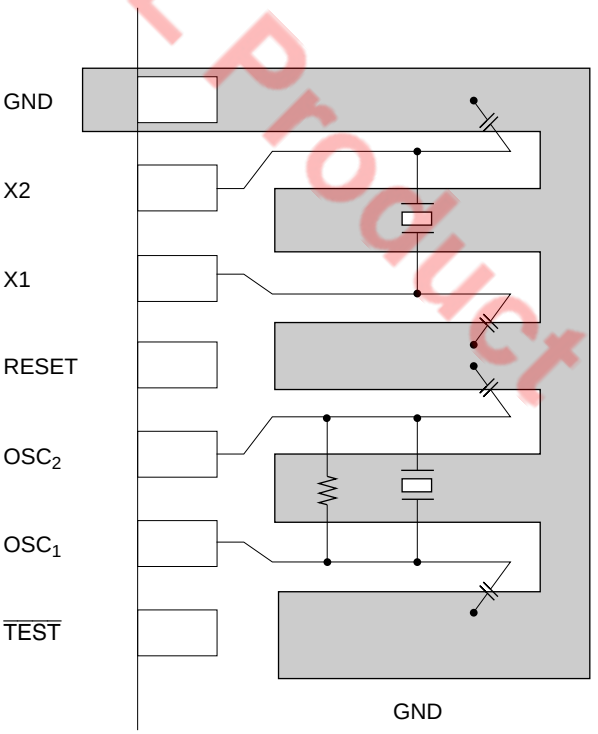

Figure 26 Typical Layouts of Crystal and Ceramic Oscillator

Input/Output

The MCU has 47 input/output pins (D_0 to D_5, D_9 to D_{11}, $R0_0$ to $R4_3$ and $R6_0$ to RA_1) and 5 input pins (D_{12}, D_{13}, RD_0, RD_1 and RE_0). The features are described below.

- Four pins D_0 to D_3 are high source current (10 mA maximum) input/output pins.
- Five pins D_4, D_5, and D_9 to D_{11} are high sink current (15 mA maximum) input/output pins.
- Certain of these input and output pins have shared functions with timers, the serial interface, and other peripheral functions. The D_{12}, D_{13}, R0, $R3_0$, $R3_2$, R4, RD_0, RD_1 and RE_0 pins are shared function pins. The use of these pins as peripheral function pins takes precedence over their use as the D and R port pins. Pins that are set to function as peripheral function pins are switched automatically between their various functions and between the input and output directions according to their specifications under the peripheral function setting.
- Input or output selection for input/output pins and port or peripheral function selection for multiplexed pins are set by software.
- Peripheral function output pins are all CMOS outputs. However, the SO_1 pin and the $R4_3$ port pin can be set to function as NMOS open drain outputs by software.
- Since the MCU goes to the reset state internally after a reset and in stop mode, the peripheral function settings for these pins are cleared. Furthermore, since the data control registers (DCD and DCR) are also reset, the input/output pins go to the high-impedance state.
- The D_0 to D_3 pin circuits include pull-down MOS transistors, and all the other pin circuits include pull-up MOS transistors. Note that the on/off states of the pull-up and pull-down MOS transistors can be set independently of the setting for use as peripheral function pins.

I/O buffer configurations are shown in figures 27 and 28, and I/O pin circuit structures are listed in tables 14 and 15.

EOL Product

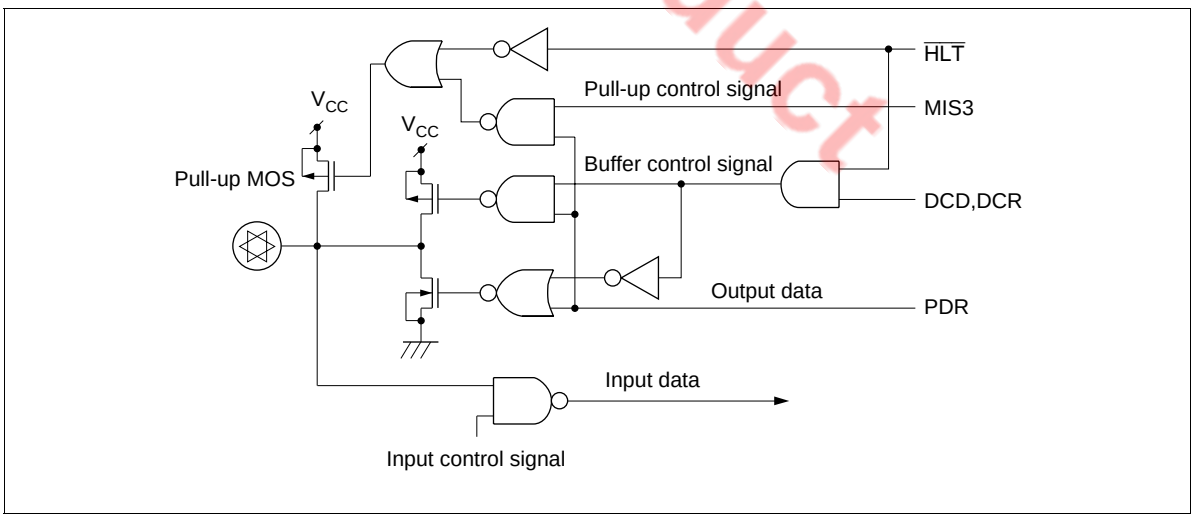

Figure 27 I/O Buffer Configuration (with Pull-Up MOS)

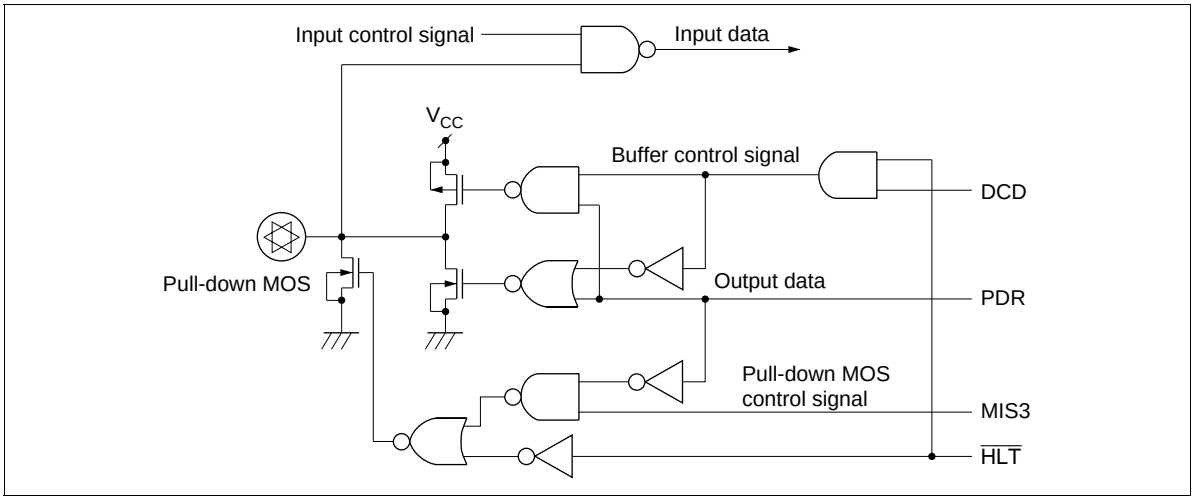

Figure 28 I/O Buffer Configuration (with Pull-Down MOS)

EOL Product

Table 14 I/O Pin Control by Register Settings (with Pull-Up MOS)

MIS3 (bit 3 of MIS)		**0**				**1**			
DCD, DCR		**0**		**1**		**0**		**1**	
PDR		**0**	**1**	**0**	**1**	**0**	**1**	**0**	**1**
CMOS buffer	PMOS	—	—	—	On	—	—	—	On
	NMOS	—	—	On	—	—	—	On	—
Pull-up MOS		—	—	—	—	—	On	—	On

Note: 1. — indicates off status.
2. PDR is not assigned to a RAM address. It is accessed with special input/output instructions.

Table 15 I/O Pin Control by Register Settings (with Pull-Down MOS)

MIS3 (bit 3 of MIS)		**0**				**1**			
DCD		**0**		**1**		**0**		**1**	
PDR		**0**	**1**	**0**	**1**	**0**	**1**	**0**	**1**
CMOS buffer	PMOS	—	—	—	On	—	—	—	On
	NMOS	—	—	On	—	—	—	On	—
Pull-down MOS		—	—	—	—	On	—	On	—

Note: 1. — indicates off status.
2. PDR is not assigned to a RAM address. It is accessed with special input/output instructions.

Table 16 Input/Output Pin Circuit Configurations

I/O Pin Type	Circuit Configuration	Relevant Pins
Input/output pins	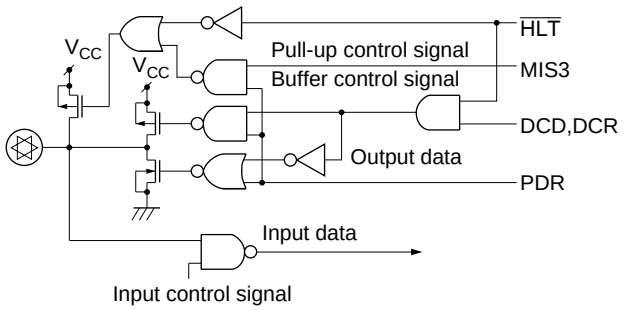	D_4, D_5, D_9–D_{11} $R0_0$–$R0_3$ $R1_0$–$R1_3$ $R2_0$–$R2_3$ $R3_0$–$R3_3$ $R4_0$–$R4_2$ $R6_0$–$R6_3$ $R7_0$–$R7_3$ $R8_0$–$R8_3$ $R9_0$–$R9_3$ RA_0, RA_1
	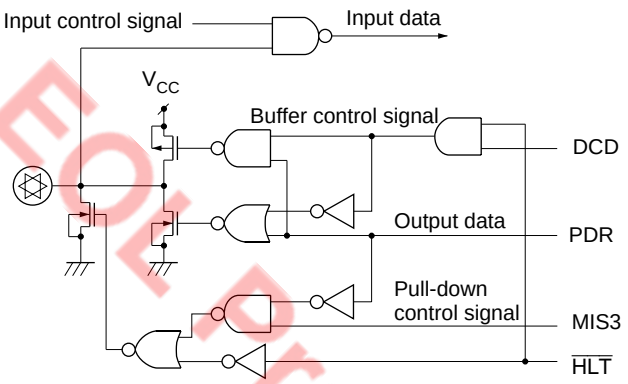	D_0–D_3
	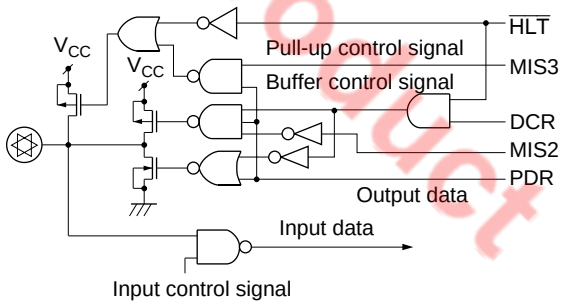	$R4_3$
Input pins	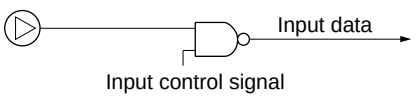	D_{12}, D_{13} RD_0, RD_1, RE_0

EOL Product

Table 16 Input/Output Pin Circuit Configurations (cont)

I/O Pin Type		Circuit Configuration	Relevant Pins
Peripheral function	Input/output pins	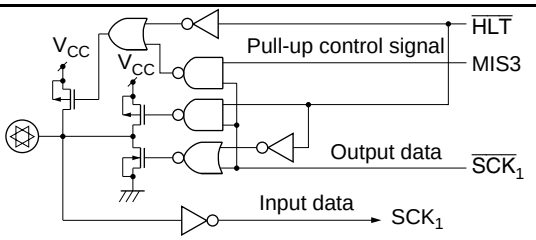	$\overline{SCK_1}$
	Output pins	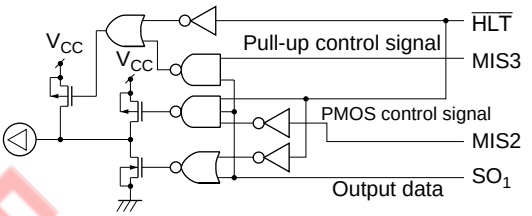	SO_1
		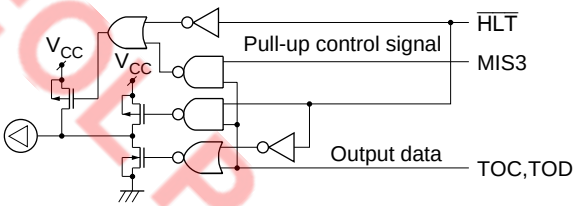	TOC, TOD
	Input pins	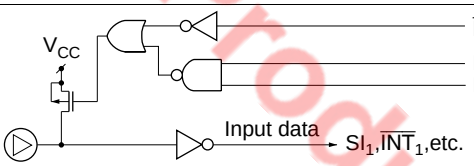	SI_1, $\overline{INT_1}$, INT_2, INT_3, INT_4, EVND
		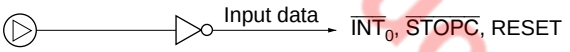	$\overline{INT_0}$, $\overline{STOPC}$ RESET

Note: In a reset and in stop mode, since the I/O control registers are reset, input/output pins go to the high-impedance state and peripheral function selections are cleared.

EOL Product

D Port

The D port consists of 9 input/output pins and 2 input-only pins that can be addressed individually on a per-bit basis. The D_0 to D_3 pins are high source current input/output pins and the D_4, D_5, and D_9 to D_{11} pins are high sink current input/output pins. The D_{12} and D_{13} pins are input-only pins.

The D_0 to D_5 and D_9 to D_{11} pins can be set or reset by the SED/RED and SEDD/REDD instructions. The output data is stored in the port data register for the pin. All the D port pins can be tested using the TD and TDD instructions.

The D port data control registers (DCD0 to DCD2: $02C to $02E) are used to turn the D_0 to D_5 and D_9 to D_{11} pin output buffers on and off. The DCD registers are mapped to addresses in the RAM area. (figure 29.)

The D_{12} and D_{13} pins have shared functions as internal peripheral function pins and the $\overline{STOPC}$ and $\overline{INT_0}$ pins. Port mode register C (PMRC: $025) bits 2 and 3 (PMRC2 and PMRC3) are used to switch the functions of these pins. (figure 32.)

EOL Product

Data control register (DCD0 to 2: $02C to $02E)
(DCR0 to 4, DCR6 to A: $030 to $034, $036 to $03A)

DCD0 to DCD2

Bit	3	2	1	0
Initial value	0	0	0	0
Read/Write	W	W	W	W
Bit name	DCD03, DCD23	DCD02, DCD22	DCD01– DCD21	DCD00– DCD10

DCR0 to DCR4
DCR6 to DCRA

Bit	3	2	1	0
Initial value	0	0	0	0
Read/Write	W	W	W	W
Bit name	DCR03– DCR43	DCR02– DCR42	DCR01– DCR41	DCR00– DCR40
	DCR63– DCR93	DCR62– DCR92	DCR61– DCRA1	DCR60– DCRA0

Note: Other bits are not used.

All Bits	CMOS Buffer Control
0	CMOS buffer Off (high-impedance)
1	CMOS buffer active

Correspondence between ports and DCD/DCR bits

Register Name	Bit 3	Bit 2	Bit 1	Bit 0
DCD0	D_3	D_2	D_1	D_0
DCD1	—	—	D_5	D_4
DCD2	D_{11}	D_{10}	D_9	—
DCR0	$R0_3$	$R0_2$	$R0_1$	$R0_0$
DCR1	$R1_3$	$R1_2$	$R1_1$	$R1_0$
DCR2	$R2_3$	$R2_2$	$R2_1$	$R2_0$
DCR3	$R3_3$	$R3_2$	$R3_1$	$R3_0$
DCR4	$R4_3$	$R4_2$	$R4_1$	$R4_0$
DCR6	$R6_3$	$R6_2$	$R6_1$	$R6_0$
DCR7	$R7_3$	$R7_2$	$R7_1$	$R7_0$
DCR8	$R8_3$	$R8_2$	$R8_1$	$R8_0$
DCR9	$R9_3$	$R9_2$	$R9_1$	$R9_0$
DCRA	—	—	RA_1	RA_0

EOL Product

Figure 29 Data Control Registers (DCD, DCR)

R Port

The R port consist of 38 input/output pins and 3 input pins that can be addressed in groups of 4 bits. Data can be input using the LAR and LBR instructions, and data can be output using the LRA and LRB instructions. Output data is stored in the port data register for the corresponding pin.

The R port data control registers (DCR0 to DCR4 and DCR6 to DCRA: $030 to $034, and $036 to $03A) are used to turn the R port output buffers on and off. The DCR registers are mapped to addresses in the RAM area. (figure 29.)

The $R0_0$ to $R0_4$ port pins have shared functions as the external interrupt input pins $\overline{INT_1}$ to INT_4. Port mode register B (PMRB $024) is used to set these pins to their peripheral function usage. (figure 31.)

The $R4_0$ port pin has a shared function as the EVND peripheral function pin. Port mode register C (PMRC: $025) bit 1 (PMRC1) is used to switch the function of this pin. (figure 32.)

The $R3_1$ and $R3_2$ port pins have shared functions as the TOC and TOD peripheral function pins. Timer mode register C2 (TMC2: $014) bits 0 to 2 (TMC20 to TMC22) and timer mode register D2 (TMD2: $015) are used to set these pins to their peripheral function usage. (figures 33 and 34.)

The $R4_1$ to $R4_3$ port pins have shared functions as the $\overline{SCK_1}$, SI_1, and SO_1 peripheral function pins. Serial mode register 1A (SM1A: $005) bit 3 (SM1A3) and port mode register A (PMRA: $004) bits 0 and 1 (PMRA0 and PMRA1) are used to set these pins to their peripheral function usage. (figures 30 and 35.)

The $R4_3/SO_1$ pin can be set to function as an NMOS open drain output with the output buffer off. Miscellaneous register (MIS: $00C) bit 2 (MIS2) is used for this setting. (figure 37.)

The RD_0 and RD_1 port pins have shared functions as the $COMP_0$ and $COMP_1$ peripheral function pins. The compare enable register (CER: $018) is used to set these pins to their comparator pin functions. (figure 36.)

EOL Product

Port mode register A (PMRA: $004)

Bit	3	2	1	0
Initial value	—	—	0	0
Read/Write	—	—	W	W
Bit name	Not used	Not used	PMRA1	PMRA0

PMRA1	$R4_2/SI_1$ mode selection
0	$R4_2$
1	SI_1

PMRA0	$R4_3/SO_1$ mode selection
0	$R4_3$
1	SO_1

Figure 30 Port Mode Register A (PMRA)

Port mode register B (PMRB: $024)

Bit	3	2	1	0
Initial value	0	0	0	0
Read/Write	W	W	W	W
Bit name	PMRB3	PMRB2	PMRB1	PMRB0

PMRB3	$R0_3/INT_4$ mode selection
0	$R0_3$
1	INT_4

PMRB0	$R0_0/\overline{INT}_1$ mode selection
0	$R0_0$
1	$\overline{INT}_1$

PMRB2	$R0_2/INT_3$ mode selection
0	$R0_2$
1	INT_3

PMRB1	$R0_1/INT_2$ mode selection
0	$R0_1$
1	INT_2

Figure 31 Port Mode Register B (PMRB)

Port mode register C (PMRC: $025)

Bit	3	2	1	0
Initial value	0	0	0	—
Read/Write	W	W	W	—
Bit name	PMRC3	PMRC2	PMRC1	Not Used

PMRC3	$D_{13}/\overline{INT}_0$ mode selection
0	D_{13}
1	$\overline{INT}_0$

PMRC2	$D_{12}/\overline{STOPC}$ mode selection
0	D_{12}
1	$\overline{STOPC}$

PMRC1	$R4_0$/EVND mode selection
0	$R4_0$
1	EVND

Figure 32 Port Mode Register C (PMRC)

EOL Product

Timer mode register C2 (TMC2: $014)

Bit	3	2	1	0
Initial value	—	0	0	0
Read/Write	—	R/W	R/W	R/W
Bit name	Not used	TMC22	TMC21	TMC20

TMC22	TMC21	TMC20	$R3_1$/TOC mode selection	
0	0	0	$R3_1$	$R3_1$ port
		1	TOC	Toggle output
	1	0	TOC	0 output
		1	TOC	1 output
1	0	0	—	Not Used
		1		
	1	0		
		1	TOC	PWM output

Figure 33 Timer Mode Register C2 (TMC2)

Timer mode register D2 (TMD2: $015)

Bit	3	2	1	0
Initial value	0	0	0	0
Read/Write	R/W	R/W	R/W	R/W
Bit name	TMD23	TMD22	TMD21	TMD20

TMD23	TMD22	TMD21	TMD20	$R3_2$/TOD mode selection	
0	0	0	0	$R3_2$	$R3_2$ port
			1	TOD	Toggle output
		1	0	TOD	0 output
			1	TOD	1 output
	1	0	0	—	Not used
			1		
		1	0		
			1	TOD	PWM output
1	×	×	×	$R3_2$	Input capture ($R3_2$ port)

× : Don't care

Figure 34 Timer Mode Register D2 (TMD2)

EOL Product

Serial mode register 1A (SM1A: $005)

Bit	3	2	1	0
Initial value	0	0	0	0
Read/Write	W	W	W	W
Bit name	SM1A3	SM1A2	SM1A1	SM1A0

SM1A3	$R4_1/\overline{SCK_1}$ mode selection
0	$R4_1$
1	$\overline{SCK_1}$

SM1A2	SM1A1	SM1A0	$\overline{SCK_1}$	Clock source	Prescaler division ratio
0	0	0	Output	Prescaler	÷2048
		1	Output	Prescaler	÷512
	1	0	Output	Prescaler	÷128
		1	Output	Prescaler	÷32
1	0	0	Output	Prescaler	÷8
		1	Output	Prescaler	÷2
	1	0	Output	System clock	—
		1	Input	External clock	—

Figure 35 Serial Mode Register 1A (SM1A)

Compare enable register (CER: $018)

Bit	3	2	1	0
Initial value	0	—	0	0
Read/Write	W	—	W	W
Bit name	CER3	Not Used	CER1	CER0

CER1	CER0	Analog input pin selection
0	0	$COMP_0$
	1	$COMP_1$
1	×	Not Used

×: Don't care

CER3	Comparator operation selection
0	Normal operation (digital input mode): $RD_0/COMP_0$ and $RD_1/COMP_1$ pins function as R port pins
1	Comparator operation (analog input mode): $RD_0/COMP_0$ and $RD_1/COMP_1$ pins function as comparator pins

Figure 36 Compare Enable Register (CER)

EOL Product

Pull-up and Pull-down MOS Transistor Control

The D_4, D_5, D_9 to D_{11}, and the R port pins have built-in pull-up MOS transistors that can be controlled by software, and the D_0 to D_3 pins have built-in pull-down MOS transistors that can be controlled by software.

The on/off status of all these transistors is controlled by bit 3 (MIS3) of the miscellaneous register (MIS: $00C), and the on/off status of an individual transistor can also be controlled by the port data register (PDR) of the corresponding pin—enabling on/off control of that pin alone (tables 14, 15 and figure 37).

The on/off status of each transistor and the peripheral function mode of each pin can be set independently.

Miscellaneous register (MIS: $00C)

Bit	3	2	1	0
Initial value	0	0	0	0
Read/Write	W	W	W	W
Bit name	MIS3	MIS2	MIS1	MIS0

MIS3	Pull-up/Pull-down MOS transistor control
0	Off
1	Active

MIS2	CMOS buffer on/off selection for pin $R4_3/SO_1$
0	Active
1	Off

MIS1	MIS0
t_{RC} selection. Refer to figure 18 in the operation modes section.	

Figure 37 Miscellaneous Register (MIS)

How to Deal with Unused I/O Pins: I/O pins that are not needed by the user system (floating) must be connected to V_{CC} to prevent LSI malfunctions due to noise. These pins must either be pulled up to V_{CC} by their pull-up MOS transistors or by resistors of about 100 kΩ. Pins provided with pull-down MOS should be pulled down to GND potential with the built-in pull-down MOS or connected to GND.

EOL Product

Prescalers

The MCU has the following two prescalers, S and W.

The prescalers operating conditions are listed in table 17, and the prescalers output supply is shown in figure 38. The timers A, C, D input clocks except external events, the serial transmit clock except the external clock, are selected from the prescaler outputs, depending on corresponding mode registers.

Table 17 Prescaler Operating Conditions

Prescaler	Input Clock	Reset Conditions	Stop Conditions
Prescaler S	System clock (in active and standby mode), Subsystem clock (in subactive mode)	MCU reset	MCU reset, stop mode, watch mode
Prescaler W	Clock derived by dividing subsystem clock 32.768 kHz oscillation by 8	MCU reset, software*	MCU reset, stop mode

Note: * If bits TMA3 to TMA1 in timer mode register A (TMA) are all set to 1, PSW is cleared to $00.

EOL Product

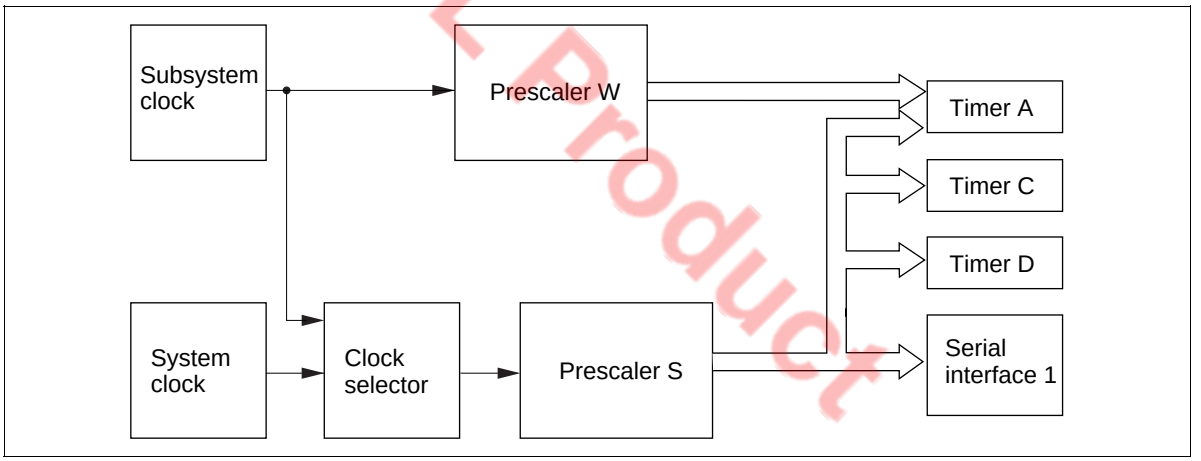

Figure 38 Prescaler Output Supply

Prescaler Operation

Prescaler S: 11-bit counter that inputs the system clock signal. After being reset to $000 by MCU reset, prescaler S divides the system clock. Prescaler S keeps counting, except in watch and stop modes and at MCU reset.

Prescaler W: Five-bit counter that inputs the X1 input clock signal (32-kHz crystal oscillation) divided by eight. After being reset to $00 by MCU reset, prescaler W divides the input clock. Prescaler W can be reset by software.

Timers

The MCU has three timer/counters (A, C, D).

- Timer A: Free-running timer
- Timer C: Multifunction timer
- Timer D: Multifunction timer

Timer A is an 8-bit free-running timer. Timers C, D are 8-bit multifunction timers, whose functions are listed in table 18. The operating modes are selected by software.

Table 18 Timer Functions

Functions		Timer A	Timer C	Timer D
Clock source	Prescaler S	Available	Available	Available
	Prescaler W	Available	—	—
	External event	—	—	Available
Timer functions	Free-running	Available	Available	Available
	Time-base	Available	—	—
	Event counter	—	—	Available
	Reload	—	Available	Available
	Watchdog	—	Available	—
	Input capture	—	—	Available
Timer outputs	Toggle	—	Available	Available
	0 output	—	Available	Available
	1 output	—	Available	Available
	PWM	—	Available	Available

Note: — implies not available.

EOL Product

Timer A

Timer A Functions: Timer A has the following functions.

- Free-running timer
- Clock time-base

The block diagram of timer A is shown in figure 39.

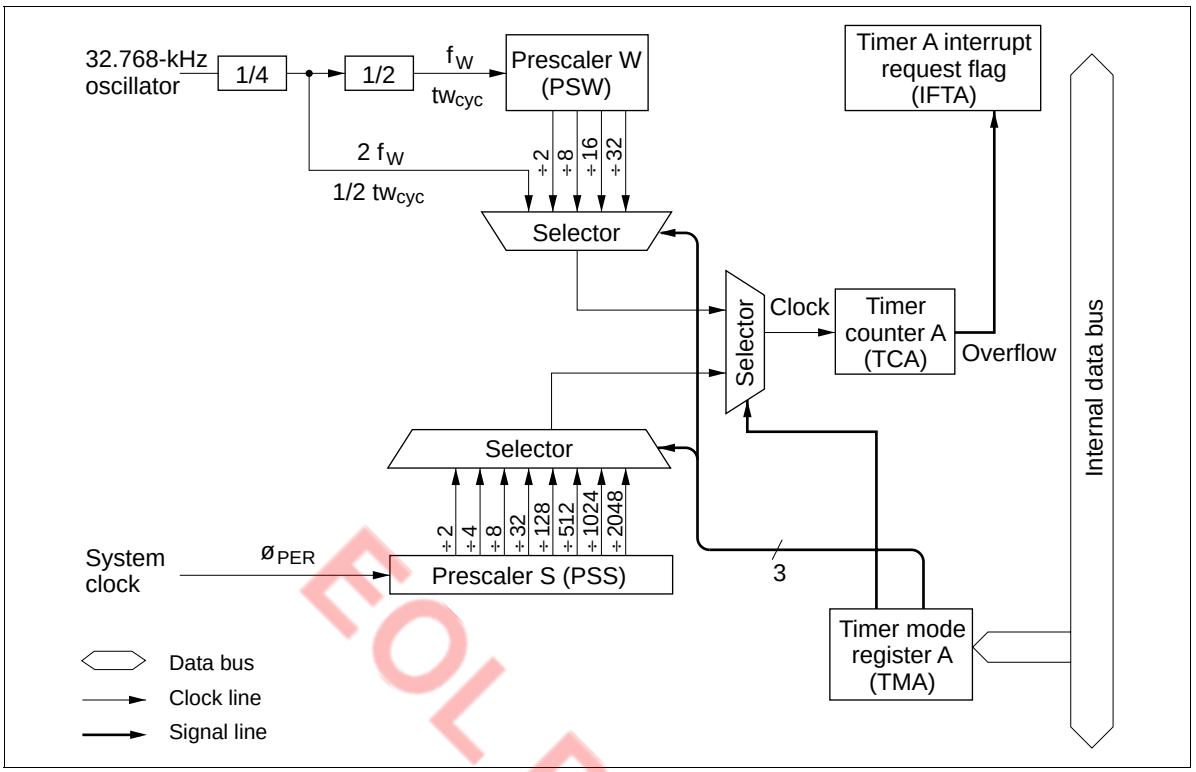

Figure 39 Block Diagram of Timer A

EOL Product

Timer A Operations

Free-running timer operation: The timer A input clock is selected by timer mode register A (TMA: $008). Timer A is reset to $00 by an MCU reset, and counts up each time the input clock is input. When the input clock is input after the timer A value reaches $FF, overflow output is generated, and the timer A value becomes $00. The generated overflow output sets the timer A interrupt request flag (IFTA: $001, 2). Timer A continues counting up after the count value returns to $00, so that an interrupt is generated regularly every 256 input clock cycles.

Realtime clock time base operation: Timer A can be used as the realtime clock time base by setting bit 3 (TMA3) of timer mode register A to 1. As the prescaler W output is input to timer counter A (TCA), interrupts are generated with accurate timing using the 32.768 kHz crystal oscillator as the basic clock.When timer A is used as the realtime clock time base, prescaler W and timer counter A (TCA) can be reset to $00 by the program.

Registers for Timer A Operation

Timer A operating modes are set by the following registers.

Timer mode register A (TMA: $008): Four-bit write-only register that selects timer A's operating mode and input clock source as shown in figure 40.

Timer mode register A (TMA: $008)

Bit	3	2	1	0
Initial value	0	0	0	0
Read/Write	W	W	W	W
Bit name	TMA3	TMA2	TMA1	TMA0

TMA3	TMA2	TMA1	TMA0	Source prescaler	Input clock frequency	Operating mode
0	0	0	0	PSS	$2048t_{cyc}$	Timer A mode
			1	PSS	$1024t_{cyc}$	
		1	0	PSS	$512t_{cyc}$	
			1	PSS	$128t_{cyc}$	
	1	0	0	PSS	$32t_{cyc}$	
			1	PSS	$8t_{cyc}$	
		1	0	PSS	$4t_{cyc}$	
			1	PSS	$2t_{cyc}$	
1	0	0	0	PSW	$32t_{Wcyc}$	Time-base mode
			1	PSW	$16t_{Wcyc}$	
		1	0	PSW	$8t_{Wcyc}$	
			1	PSW	$2t_{Wcyc}$	
	1	0	0	—	$1/2t_{Wcyc}$	
			1	—	Not used	
		1	×	—	Reset PSW and TCA	

× : Don't care

Note: 1. t_{Wcyc} = 244.14 µs (when a 32.768-kHz crystal oscillator is used)
2. Timer counter overflow output period (seconds) = input clock period (seconds) × 256.
3. The division ratio must not be modified during time-base mode operation, otherwise an overflow cycle error will occur.

Figure 40 Timer Mode Register A (TMA)

EOL Product

Timer C

Timer C Functions: Timer C has the following functions.

- Free-running/reload timer
- Watchdog timer
- Timer output operation (toggle, 0, 1, and PWM outputs)

The block diagram of timer C is shown in figure 41.

EOL Product

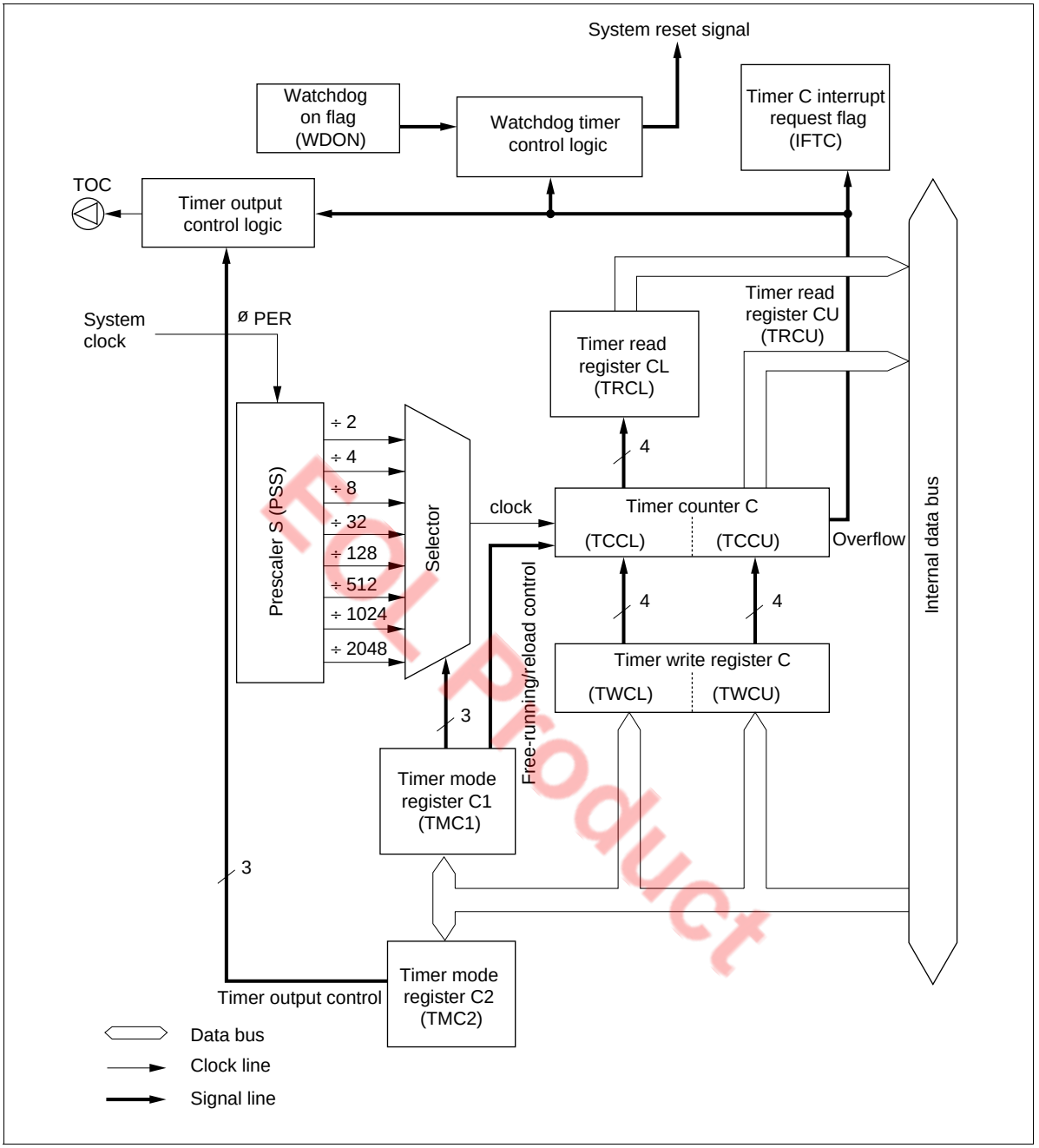

For Product

Figure 41 Block Diagram of Timer C

Timer C Operations

Free-running/reload timer operation: The free-running/reload operation, input clock source, and prescaler division ratio are selected by timer mode register C1 (TMC1: $00D).

Timer C is initialized to the value set in timer write register C (TWCL: $00E, TWCU: $00F) by software and incremented by one at each clock input. If an input clock is applied to timer C after it has reached $FF, an overflow is generated. In this case, if the reload timer function is enabled, timer C is initialized to its initial value set in timer write register C (TWCL: $00E, TWCU: $00F); if the free-running timer function is enabled, the timer is initialized to $00 and then incremented again.

The overflow sets the timer C interrupt request flag (IFTC: $002, bit 2). The timer C interrupt request flag is reset by the program, an MCU reset or a transition to stop mode. For details, see figure 3, Configuration of Interrupt Control Bits and Register Flag Area, and table 1, Initial Values after MCU Reset.

Watchdog timer operation: Timer C is used as a watchdog timer for detecting out-of-control program routines by setting the watchdog on flag (WDON: $020, bit 1) to 1. If a program routine runs out of control and an overflow is generated, the MCU is reset. Program run can be controlled by initializing timer C by software before it reaches $FF.

Timer output operation: The following four output modes can be selected for timer C by setting timer mode register C2 (TMC2: $014). With timer C, the $R3_1$/TOC pin is designated as the TOC pin, and toggle waveform output, low-level output, high-level output, or PWM waveform output can be selected, by timer mode register C2 (TMC2: $014). TOC pin output is initialized to the low level by an MCU reset.

- Toggle output

  With toggle output, the output level is changed upon input of the next clock pulse after the timer C value reaches $FF. Use of this function in combination with the reload timer allows a clock signal with any period to be output, enabling it to be used as buzzer output. The output waveform is shown in figure 42.

- Low-level output

  With low-level output, the output is changed to the low level when timer C overflows. This function should be used when the output is high.

- High-level output

  With high-level output, the output is changed to the high level when timer C overflows. This function should be used when the output is low.

- PWM output

  With PWM output, variable-duty pulses are output. The output waveform is as shown in figure 42, according to the contents of timer mode register C1 (TMC1: $00D) and timer write register C (TWCL: $00E, TWCU: $00F).

EOL Product

Toggle output waveform (timers C and D)

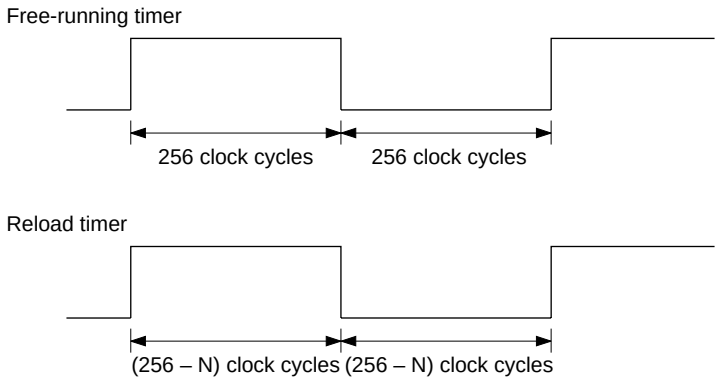

PWM output waveform (timers C and D)

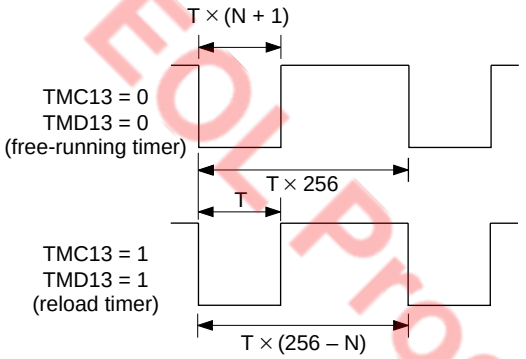

Notes: T: Counter input clock period
The clock input source and division ratio are controlled by timer mode register C1 and timer mode register D1.
N: Value in timer write register C or timer write register D
(When N = 255 (= $FF), PWM output is always fixed low.)

Figure 42 Timer Output Waveforms

EOL Product

Registers for Timer C Operation

By using the following registers, timer C operation modes are selected and the timer C count is read and written.

- Timer mode register C1 (TMC1: $00D)
- Timer mode register C2 (TMC2: $014)
- Timer write register C (TWCL: $00E, TWCU: $00F)
- Timer read register C (TRCL: $00E, TRCU: $00F)

Timer mode register C1 (TMC1: $00D): Four-bit write-only register that selects the free-running/reload timer function, and the prescaler division ratio as shown in figure 43. It is reset to $0 by MCU reset or in stop mode.

Writing to this register is valid from the second instruction execution cycle after the execution of the previous timer mode register C1 write instruction. Setting timer C's initialization by writing to timer write register C (TWCL: $00E, TWCU: $00F) must be done after a mode change becomes valid.

EOL Product

Timer mode register C1 (TMC1: $00D)

Bit	3	2	1	0
Initial value	0	0	0	0
Read/Write	W	W	W	W
Bit name	TMC13	TMC12	TMC11	TMC10

TMC13	Free-running/reload timer selection
0	Free-running timer
1	Reload timer

TMC12	TMC11	TMC10	Input clock period
0	0	0	$2048t_{cyc}$
		1	$1024t_{cyc}$
	1	0	$512t_{cyc}$
		1	$128t_{cyc}$
1	0	0	$32t_{cyc}$
		1	$8t_{cyc}$
	1	0	$4t_{cyc}$
		1	$2t_{cyc}$

Figure 43 Timer Mode Register C1 (TMC1)

Timer mode register C2 (TMC2: $014): Timer mode register C2 (TMC2: $014) is a 3-bit read/write register, used to switch the function of the R31/TOC pin and select the timer C output mode as shown in figure 44.

Timer mode register C2 (TMC2: $014) is reset to $0 by an MCU reset or in stop mode.

Timer mode register C2 (TMC2: $014)

Bit	3	2	1	0
Initial value	—	0	0	0
Read/Write	—	R/W	R/W	R/W
Bit name	Not used	TMC22	TMC21	TMC20

TMC22	TMC21	TMC20	$R3_1$/TOC mode selection	
0	0	0	$R3_1$	$R3_1$ port
		1	TOC	Toggle output
	1	0	TOC	0 output
		1	TOC	1 output
1	0	0	—	Not used
		1		
	1	0		
		1	TOC	PWM output

EOL Product

Figure 44 Timer Mode Register C2 (TMC2)

Timer write register C (TWCL: $00E, TWCU: $00F): Timer write register C (TWCL: $00E, TWCU: $00F) is a write-only register composed of a lower digit (TWCL: $00E) and an upper digit (TWCU: $00F).

The lower digit (TWCL) of timer write register C is reset to $0 by an MCU reset or in stop mode, while the upper digit (TWCU) is undetermined.

Timer C can be initialized by writing to timer write register C (TWCL, TWCU). To write the data, first write the lower digit (TWCL). The lower digit write does not change the timer C value. Next, write the upper digit (TWCU). Timer C is then initialized to the timer write register C (TWCL, TWCU) value. When writing to timer write register C (TWCL, TWCU) from the second time onward, if it is not necessary to change the lower digit (TWCL) reload value, timer C initialization is completed by the upper digit write alone.

Timer write register C (lower digit) (TWCL: $00E)

Bit	3	2	1	0
Initial value	0	0	0	0
Read/Write	W	W	W	W
Bit name	TWCL3	TWCL2	TWCL1	TWCL0

Figure 45 Timer Write Register C Lower Digit (TWCL)

Timer write register C (upper digit) (TWCU: $00F)

Bit	3	2	1	0
Initial value	Undefined	Undefined	Undefined	Undefined
Read/Write	W	W	W	W
Bit name	TWCU3	TWCU2	TWCU1	TWCU0

Figure 46 Timer Write Register C Upper Digit (TWCU)

Timer read register C (TRCL: $00E, TRCU: $00F): Timer read register C (TRCL: $00E, TRCU: $00F) is a read-only register composed of a lower digit (TRCL: $00E), and an upper digit (TRCU: $00F) from which the value of the upper digit of timer C is read directly.

First, read the upper digit (TRCU) of timer read register C. The current value of the timer C upper digit is read and, at the same time, the value of the timer C lower digit is latched in the lower digit (TRCL) of timer read register C. The timer C value is obtained when the upper digit (TRCU) of timer read register C is read by reading the lower digit (TRCL) of timer read register C.

Timer read register C (lower digit) (TRCL: $00E)

Bit	3	2	1	0
Initial value	Undefined	Undefined	Undefined	Undefined
Read/Write	R	R	R	R
Bit name	TRCL3	TRCL2	TRCL1	TRCL0

Figure 47 Timer Read Register C Lower Digit (TRCL)

EOL Product

Timer read register C (upper digit) (TRCU: $00F)

Bit	3	2	1	0
Initial value	Undefined	Undefined	Undefined	Undefined
Read/Write	R	R	R	R
Bit name	TRCU3	TRCU2	TRCU1	TRCU0

Figure 48 Timer Read Register C Upper Digit (TRCU)

Timer D

Timer D Functions: Timer D has the following functions.

- Free-running/reload timer
- External event counter
- Timer output operation (toggle, low-level, high-level, and PWM outputs)
- Input capture timer

The block diagram for each operation mode of timer D is shown in figures 49(1) and 49(2).

EOL Product

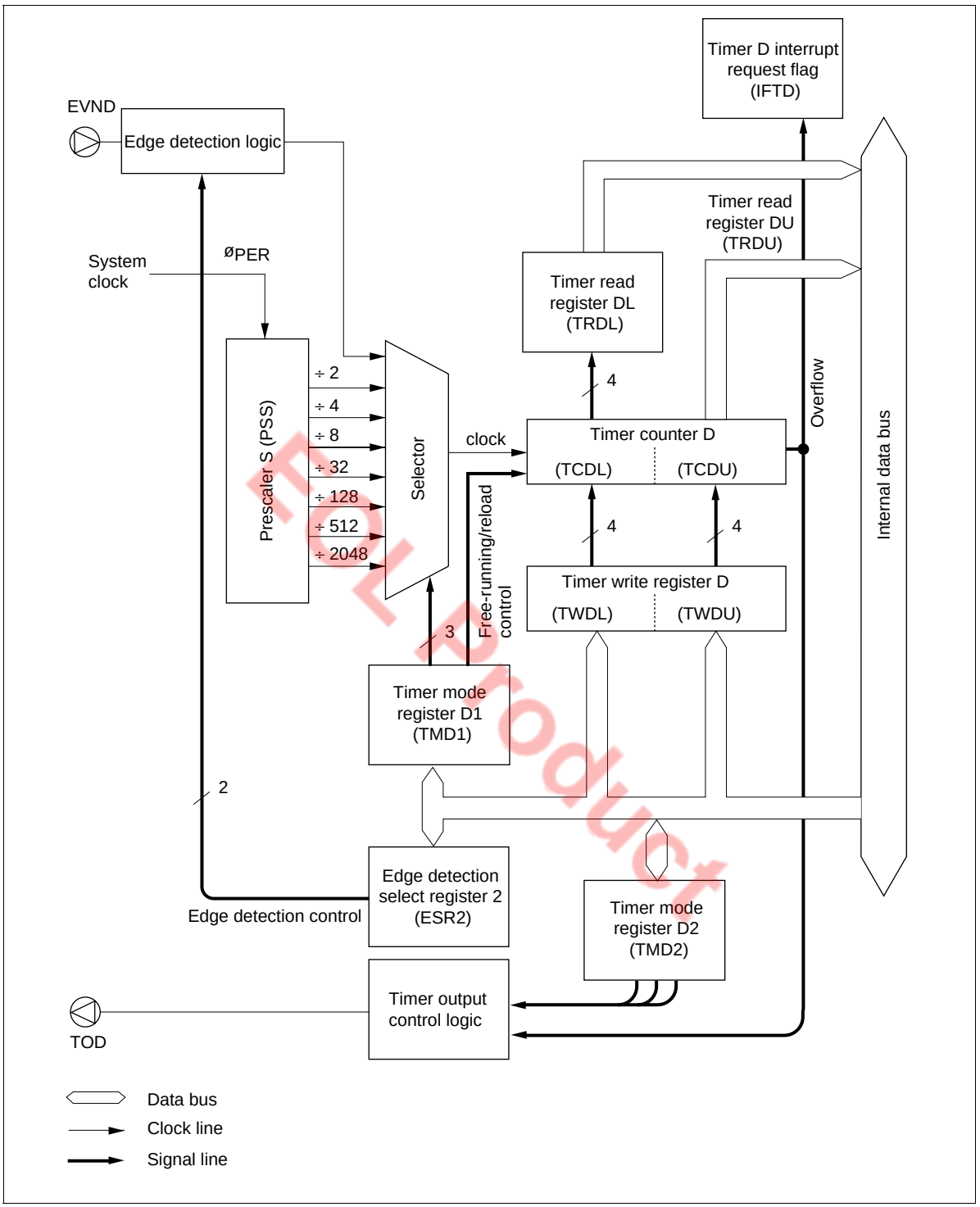

EOL Product

Figure 49(1) Block Diagram of Timer D (Free-Running/Reload Timer/Event Counter Modes)

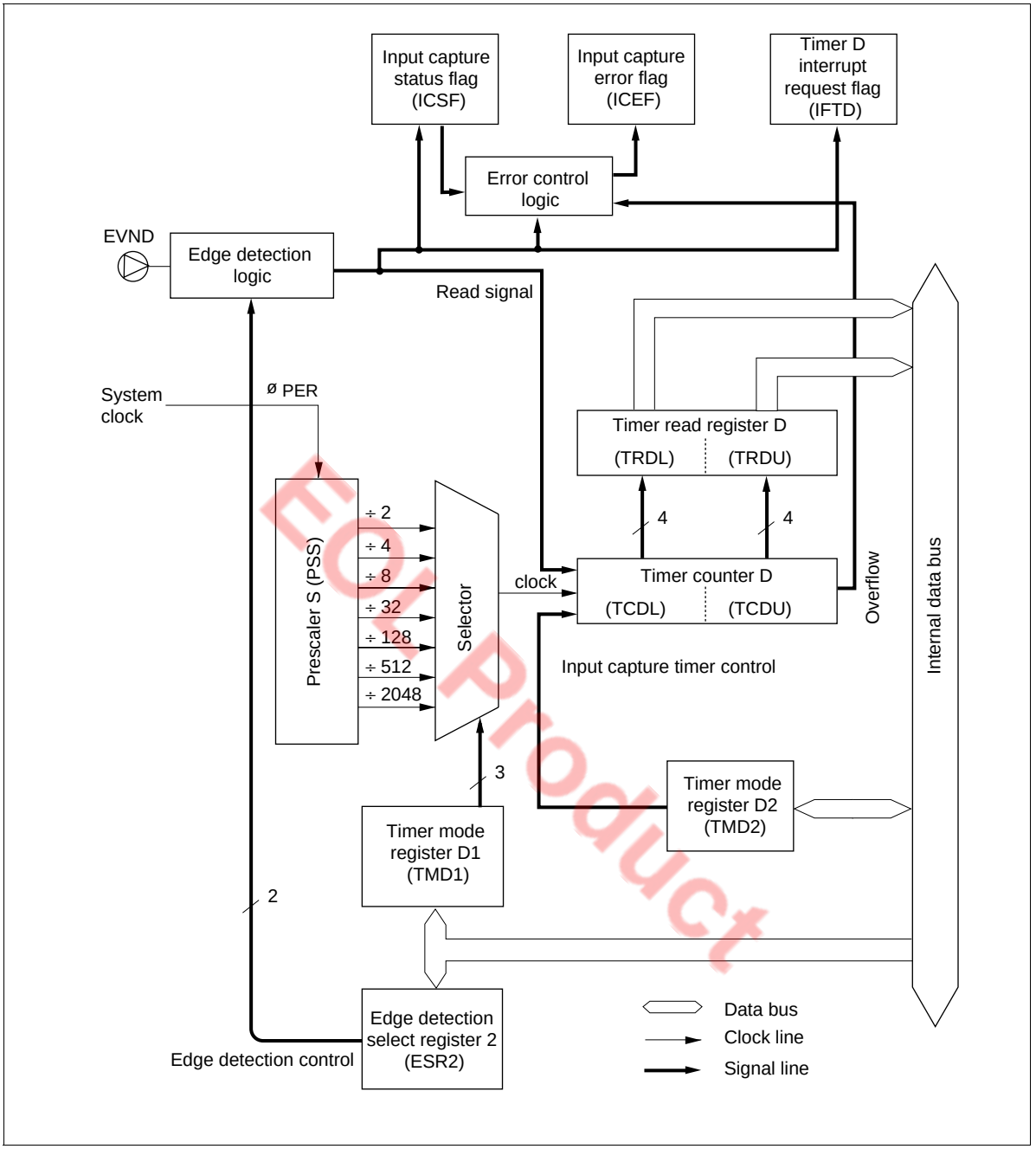

EOL Product

Figure 49(2) Block Diagram of Timer D (Input Capture Timer)

Timer D Operations:

- Free-running/reload timer operation: The free-running/reload operation, input clock source, and prescaler division ratio are selected by timer mode register D1 (TMD1: $010).

  Timer D is initialized to the value set in timer write register D (TWDL: $011, TWDU: $012) by software and incremented by one at each clock input. If an input clock is applied to timer D after it has reached $FF, an overflow is generated. In this case, if the reload timer function is enabled, timer D is initialized to its initial value set in timer write register D (TWDL: $011, TWDU: $012); if the free-running timer function is enabled, the timer is initialized to $00 and then incremented again.

  The timer D interrupt request flag (IFTD: $003, 0) is reset by the program, and by an MCU reset or a transition to stop mode. For details, see figure 3, Configuration of Interrupt Control Bits and Register Flag Areas, and table 1, Initial Values after MCU Reset.

- External event counter operation: When external event input is designated for the input clock by timer mode register D1 (TMD1), timer D operates as an external event counter.In this case, pin $R4_0$/EVND must be set to EVND by port mode register C (PMRC: $025).

  Either falling or rising edge, or both falling and rising edges of input signals can be selected as the external event detection edge by detection edge select register 2 (ESR2: $027). When both rising and falling edges detection is selected, the time between the falling edge and rising edge of input signals must be $2t_{cyc}$ or longer.

  Timer D is incremented by one at each detection edge selected by detection edge select register 2 (ESR2: $027). The other operation is basically the same as the free-running/reload timer operation.

- Timer output operation: The following four output modes can be selected for timer D by setting timer mode register D2 (TMD2: $015).

  Toggle
  Low-level output
  Hige-level output
  PWM output

  Pin $R3_2$/TOD is set to TOD.

  — Toggle output: The operation is basically the same as that of timer-C's toggle output.

  — 0 output: The operation is basically the same as that of timer-C's 0 output.

  — 1 output: The operation is basically the same as that of timer-C's 1 output.

  — PWM output: The operation is basically the same as that of timer-C's PWM output.

EOL Product

- Input capture timer operation: The input capture timer counts the clock cycles between trigger edges input to pin EVND.

  Either falling or rising edge, or both falling and rising edges of input signals can be selected as the trigger input edge by detection edge select register 2 (ESR2: $027).

  When a trigger edge is input to EVND, the count of timer D is written to timer read register D (TRDL: $011, TRDU: $012), and the timer D interrupt request flag (IFTD: $003, bit 0) and the input capture status flag (ICSF: $021, bit 0) are set. Timer D is reset to $00, and then incremented again. While ICSF is set, if a trigger input edge is applied to timer D, or if timer D generates an overflow, the input capture error flag (ICEF: $021, bit 0) is set. ICSF and ICEF are reset to 0 by MCU reset or by writing 0.

  By selecting the input capture operation, pin $R3_2$/TOD is set to $R3_2$ and timer D is reset to $00.

Registers for Timer D Operation: By using the following registers, timer D operation modes are selected and the timer D count is read and written.

Timer mode register D1 (TMD1: $010)
Timer mode register D2 (TMD2: $015)
Timer write register D (TWDL: $011, TWDU: $012)
Timer read register D (TRDL: $011, TRDU: $012)
Port mode register C (PMRC: $025)
Detection edge select register 2 (ESR2: $027)

Timer mode register D1 (TMD1: $010): Four-bit write-only register that selects the free-running/reload timer function, input clock source, and the prescaler division ratio as shown in figure 50. Timer mode register D1 (TMD1: $010) is reset to $0 by an MCU reset or in stop mode.

- Writing to this register is valid from the second instruction execution cycle after the execution of the previous timer mode register D1 (TMD1: $010) write instruction. Setting timer D's initialization by writing to timer write register D (TWDL: $011, TWDU: $012) must be done after a mode change becomes valid.
- When selecting the input capture timer operation, select the internal clock as the input clock source. When designating external event input for the input clock, set bit 1 (PMRC1) of port mode register C (PMRC) to 1.

EOL Product

Timer mode register D1 (TMD1: $010)

Bit	3	2	1	0
Initial value	0	0	0	0
Read/Write	W	W	W	W
Bit name	TMD13	TMD12	TMD11	TMD10

TMD13	Free-running/reload timer selection
0	Free-running timer
1	Reload timer

TMD12	TMD11	TMD10	Input clock period and input clock source
0	0	0	$2048t_{cyc}$
		1	$512t_{cyc}$
	1	0	$128t_{cyc}$
		1	$32t_{cyc}$
1	0	0	$8t_{cyc}$
		1	$4t_{cyc}$
	1	0	$2t_{cyc}$
		1	EVND (external event input)

Figure 50 Timer Mode Register D1 (TMD1)

EOL Product

Timer mode register D2 (TMD2: $015): Timer mode register D2 (TMD2: $015) is a 4-bit read/write register, used to switch the function of the $R3_2$/TOD pin and select the timer D output mode as shown in figure 51. Timer mode register D2 (TMD2: $015) is reset to $0 by an MCU reset and in stop mode.

Timer mode register D2 (TMD2: $015)

Bit	3	2	1	0
Initial value	0	0	0	0
Read/Write	R/W	R/W	R/W	R/W
Bit name	TMD23	TMD22	TMD21	TMD20

TMD23	TMD22	TMD21	TMD20	$R3_2$/TOD mode selection	
0	0	0	0	$R3_2$	$R3_2$ port
			1	TOD	Toggle output
		1	0	TOD	0 output
			1	TOD	1 output
	1	0	0	—	Not used
			1		
		1	0		
			1	TOD	PWM output
1	×	×	×	$R3_2$	Input capture ($R3_2$ port)

× : Don't care

Figure 51 Timer Mode Register D2 (TMD2)

Timer write register D (TWDL: $011, TWDU: $012): Write-only register consisting of the lower digit (TWDL: $011) and the upper digit (TWDU: $012). The operation of timer write register D is basically the same as that of timer write register C (TWCL: $00E, TWCU: $00F).

Timer write register D (lower digit) (TWDL: $011)

Bit	3	2	1	0
Initial value	0	0	0	0
Read/Write	W	W	W	W
Bit name	TWDL3	TWDL2	TWDL1	TWDL0

Figure 52 Timer Write Register D Lower Digit (TWDL)

EOL Product

Timer write register D (upper digit) (TWDU: $012)

Bit	3	2	1	0
Initial value	Undefined	Undefined	Undefined	Undefined
Read/Write	W	W	W	W
Bit name	TWDU3	TWDU2	TWDU1	TWDU0

Figure 53 Timer Write Register D Upper Digit (TWDU)

Timer read register D (TRDL: $011, TRDU: $012): Read-only register consisting of the lower digit (TRDL) and the upper digit (TRDU). The operation of timer read register D is basically the same as that of timer read registerC (TRCL: $00E, TRCU: $00F).

When the input capture timer operation is selected and if the count of timer D is read after a trigger is input, either the lower or upper digit can be read first.

EOL Product

Timer read register D (lower digit) (TRDL: $011)

Bit	3	2	1	0
Initial value	Undefined	Undefined	Undefined	Undefined
Read/Write	R	R	R	R
Bit name	TRDL3	TRDL2	TRDL1	TRDL0

Figure 54 Timer Read Register D Lower Digit (TRDL)

Timer read register D (upper digit) (TRDU: $012)

Bit	3	2	1	0
Initial value	Undefined	Undefined	Undefined	Undefined
Read/Write	R	R	R	R
Bit name	TRDU3	TRDU2	TRDU1	TRDU0

Figure 55 Timer Read Register D Upper Digit (TRDU)

Port mode register C (PMRC: $025): Write-only register that selects $R4_0$/EVND pin function as shown in figure 56. It is reset to $0 by MCU reset.

Port mode register C (PMRC: $025) bits 3 and 1 (PMRC3, PMRC1) are reset to 00 by an MCU reset or in stop mode. Bit 2 (PMRC2) is reset to 0 by an MCU reset, but retains its previous setting in stop mode.

Port mode register C (PMRC: $025)

Bit	3	2	1	0
Initial value	0	0	0	—
Read/Write	W	W	W	—
Bit name	PMRC3	PMRC2	PMRC1	Not Used

PMRC2	D_{12}/$\overline{STOPC}$ pin mode selection
0	D_{12}
1	$\overline{STOPC}$

PMRC1	$R4_0$/EVND pin mode selection
0	$R4_0$
1	EVND

PMRC3	D_{13}/$\overline{INT_0}$ pin mode selection
0	D_{13}
1	$\overline{INT_0}$

Figure 56 Port Mode Register C (PMRC)

EOL Product

Detection edge select register 2 (ESR2: $027): Write-only register that selects the detection edge of signals input to pin EVND as shown in figure 57. It is reset to $0 by an MCU reset or in stop mode.

Detection edge select register 2 (ESR2: $027)

Bit	3	2	1	0
Initial value	0	0	0	0
Read/Write	W	W	W	W
Bit name	ESR23	ESR22	ESR21	ESR20

ESR23	ESR22	EVND detection edge
0	0	No detection
	1	Falling-edge detection
1	0	Rising-edge detection
	1	Double-edge detection*

ESR21	ESR20	INT_4 detection edge
0	0	No detection
	1	Falling-edge detection
1	0	Rising-edge detection
	1	Double-edge detection*

Note: * Both falling and rising edges are detected.

Figure 57 Detection Edge Select Register 2 (ESR2)

EOL Product

Serial Interface

Serial Interface Overview

Function

• 8-bit serial data transmission/reception

Features

- Multiple transmit clock sources
  - External clock
  - Internal prescaler output clock
  - System clock
- High/low control in idle states

Configuration

- Serial data register 1 (SR1L: $006, SR1U: $007)
- Serial mode register 1 A (SM1A: $005)
- Serial mode register 1 B (SM1B: $028)
- Port mode register A (PMRA: $004)
- Miscellaneous register (MIS: $00C)
- Octal counter (OC1)
- Selector

The block diagram of the serial interface is shown in figure 58.

EOL Product

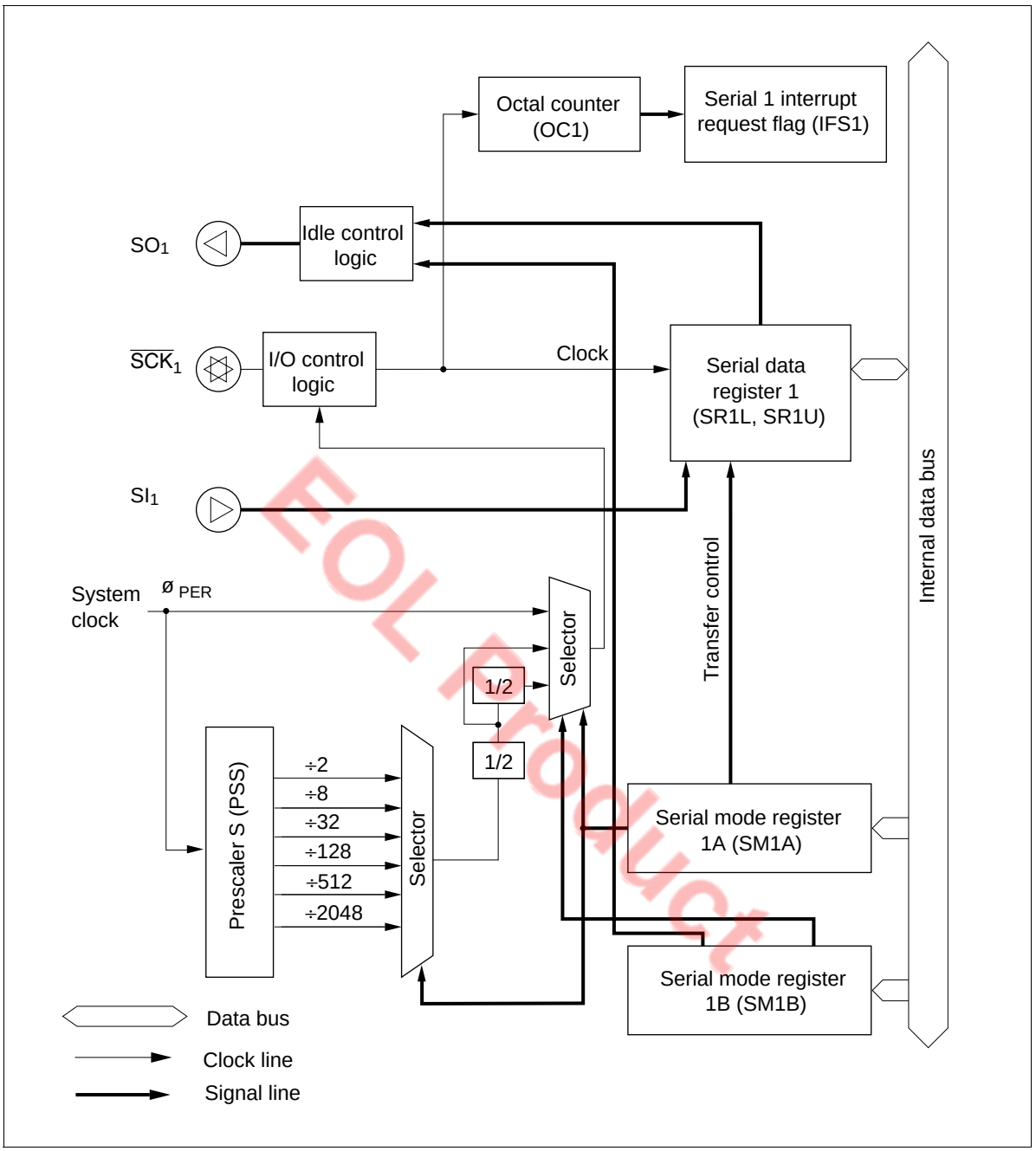

EOL Product

Figure 58 Block Diagram of Serial Interface

Serial Interface Operation

Selecting and Changing the Operating Mode: Table 19 lists the serial interface's operating modes. To select an operating mode, use one of these combinations of port mode register A (PMRA: $004) and serial mode register 1A (SM1A: $005) settings; to change the operating mode, always initialize the serial interface internally by writing data to serial mode register 1A (SM1A: $005). Note that the serial interface is initialized by writing data to serial mode register 1A(SM1A: $005). Refer to the following Serial Mode Register 1A section for details.

Pin Setting: The $R4_1/\overline{SCK}_1$ pin is controlled by writing data to serial mode register 1A (SM1A: $005). The $R4_2/SI_1$ and $R4_3/SO_1$ pins are controlled by writing data to port mode register A (PMRA: $004). Refer to the following Registers for Serial Interface section for details.

Transmit Clock Source Setting: The transmit clock source is set by writing data to serial mode register 1A (SM1A: $005) and serial mode register 1B (SM1B: $028). Refer to the following Registers for Serial Interface section for details.

Data Setting: Transmit data is set by writing data to the serial data register 1 (SR1L: $006, SR1U: $007). Receive data is obtained by reading the contents of the serial data register 1 (SR1L: $006, SR1U: $007). The serial data is shifted by the transmit clock and is input from or output to an external system.

The output level of the SO_1 pin is invalid until the first data is output after MCU reset, or until the High/Low level control in idle states is performed.

EOL Product

Table 19 Serial Interface Operating Modes

SM1A	PMRA		
Bit 3	**Bit 1**	**Bit 0**	**Operating Mode**
1	0	0	Serial clock continuous output mode
		1	Transmit mode
	1	0	Receive mode
		1	Transmit/receive mode

Transfer Control: The serial interface is activated by the STS instruction. The octal counter is reset to 000 by this instruction, and it increments at the rising edge of the transmit clock. When the eighth transmit clock signal is input or when serial transmission/receive is discontinued, the octal counter is reset to 000, the serial 1 interrupt request flag (IFS1: $003, bit 2) is set, and the transfer stops.

When the prescaler output is selected as the transmit clock, the transmit clock frequency is selected as $4t_{cyc}$ to $8192t_{cyc}$ by setting bits 2 to 0 (SM1A2– SM1A0) of serial mode register 1A (SM1A: $005) and bit 0 (SM1B0) of serial mode register 1B (SM1B: $028) as listed in table 20.

Table 20 Serial Transmit Clock (Prescaler Output)

SM1B		SM1A			
Bit 0	Bit 2	Bit 1	Bit 0	Transmit Clock Division Ratio	Transmit Clock Frequency
0	0	0	0	$(ø_{PER} / 2048) \div 2$	$4096t_{cyc}$
			1	$(ø_{PER} / 512) \div 2$	$1024t_{cyc}$
		1	0	$(ø_{PER} / 128) \div 2$	$256t_{cyc}$
			1	$(ø_{PER} / 32) \div 2$	$64t_{cyc}$
	1	0	0	$(ø_{PER} / 8) \div 2$	$16t_{cyc}$
			1	$(ø_{PER} / 2) \div 2$	$4t_{cyc}$
1	0	0	0	$(ø_{PER} / 2048) \div 4$	$8192t_{cyc}$
			1	$(ø_{PER} / 512) \div 4$	$2048t_{cyc}$
		1	0	$(ø_{PER} / 128) \div 4$	$512t_{cyc}$
			1	$(ø_{PER} / 32) \div 4$	$128t_{cyc}$
	1	0	0	$(ø_{PER} / 8) \div 4$	$32t_{cyc}$
			1	$(ø_{PER} / 2) \div 4$	$8t_{cyc}$

Operating States: The serial interface has the operating states shown in figure 59 in external clock mode and internal clock mode.

STS wait state
Transmit clock wait state
Transfer state
Serial clock continuous output state (internal clock mode only)

- STS wait state: The serial interface enters STS wait state by MCU reset (00, 10 in figure 59). In STS wait state, the serial interface is initialized and the transmit clock is ignored. If the STS instruction is then executed (01, 11), the serial interface enters transmit clock wait state.

EOL Product

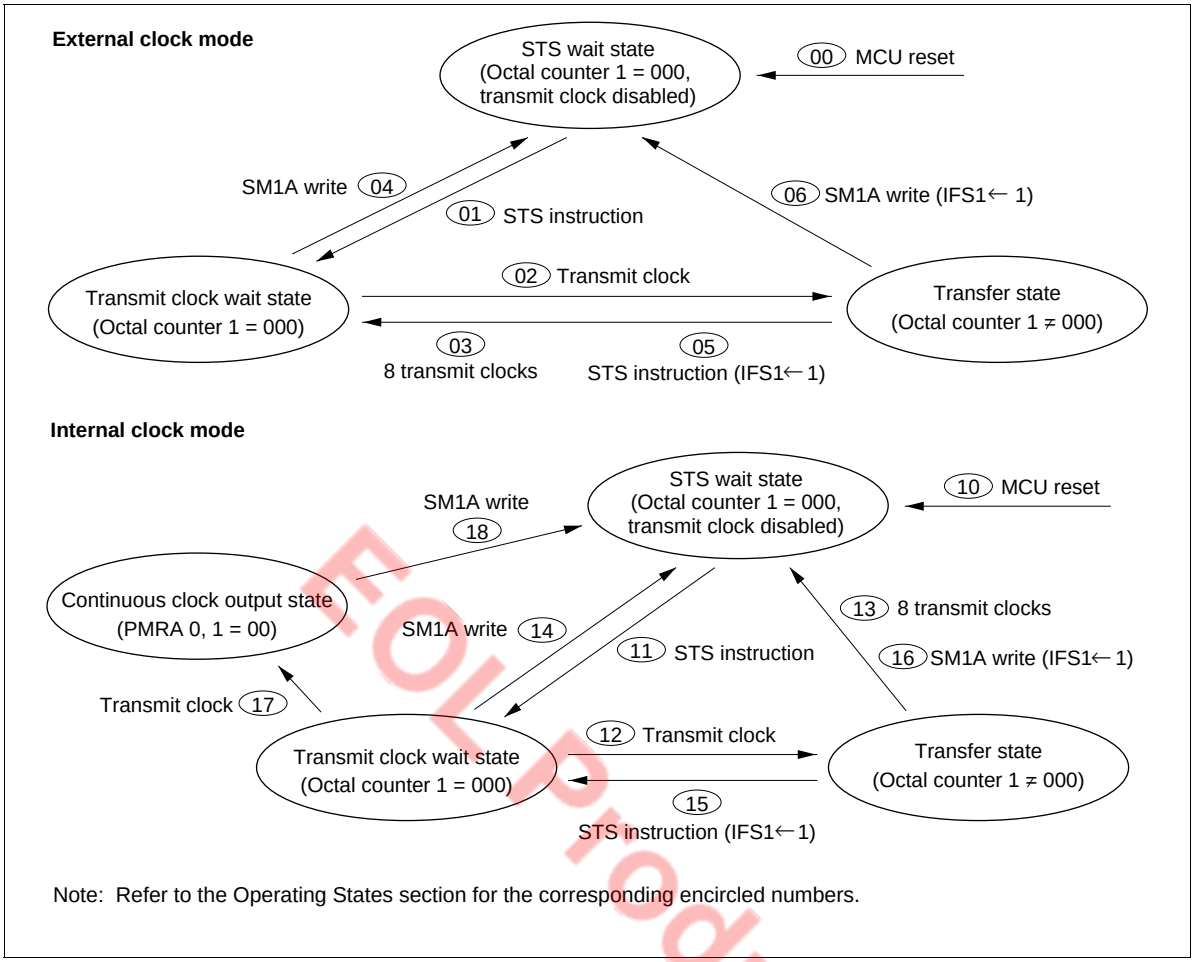

EOL Product

Figure 59 Serial Interface State Transitions

- Transmit clock wait state: Transmit clock wait state is between the STS execution and the falling edge of the first transmit clock. In transmit clock wait state, input of the transmit clock (02, 12) increments the octal counter, shifts the serial data register 1 (SR1L: $006, SR1U: $007), and enters the serial interface in transfer state. However, note that if continuous clock output mode is selected in internal clock mode, the serial interface does not enter transfer state but enters continuous clock output state (17).

  The serial interface enters STS wait state by writing data to serial mode register 1A (SM1A: $005) (04, 14) in transmit clock wait state.

- Transfer state: Transfer state is between the falling edge of the first clock and the rising edge of the eighth clock. In transfer state, the input of eight clocks or the execution of the STS instruction sets the octal counter to 000, and the serial interface enters another state. When the STS instruction is executed (05, 15), transmit clock wait state is entered. When eight clocks are input, transmit clock wait state is entered (03) in external clock mode, and STS wait state is entered (13) in internal clock mode. In internal clock mode, the transmit clock stops after outputting eight clocks.

  In transfer state, writing data to serial mode register 1A (SM1A: $005) (06, 16) initializes the serial interface, and STS wait state is entered.

If the state changes from transfer to another state, the serial 1 interrupt request flag (IFS1: $003, bit 2) is set by the octal counter that is reset to 000.

- Continuous clock output state (only in internal clock mode): Continuous clock output state is entered only in internal clock mode. In this state, the serial interface does not transmit/receive data but only outputs the transmit clock from the $\overline{SCK}_1$ pin.

  When bits 1 and 0 (PMRA1, PMRA0) of port mode register A (PMRA: $004) are 00 in transmit clock wait state and if the transmit clock is input (17), the serial interface enters continuous clock output state. If serial mode register 1A (SM1A: $005) is written to in continuous clock output mode (18), STS wait state is entered.

High/Low Control in Idle States: In idle states, that is, STS wait state and transmit clock wait state, the output level of the SO_1 pin can be controlled by setting bit 1 (SM1B1) of serial mode register 1B (SM1B: $028) to 0 or 1. The high/low control example is shown in figure 60. Note that the high/low level cannot be controlled in transfer state.

EOL Product

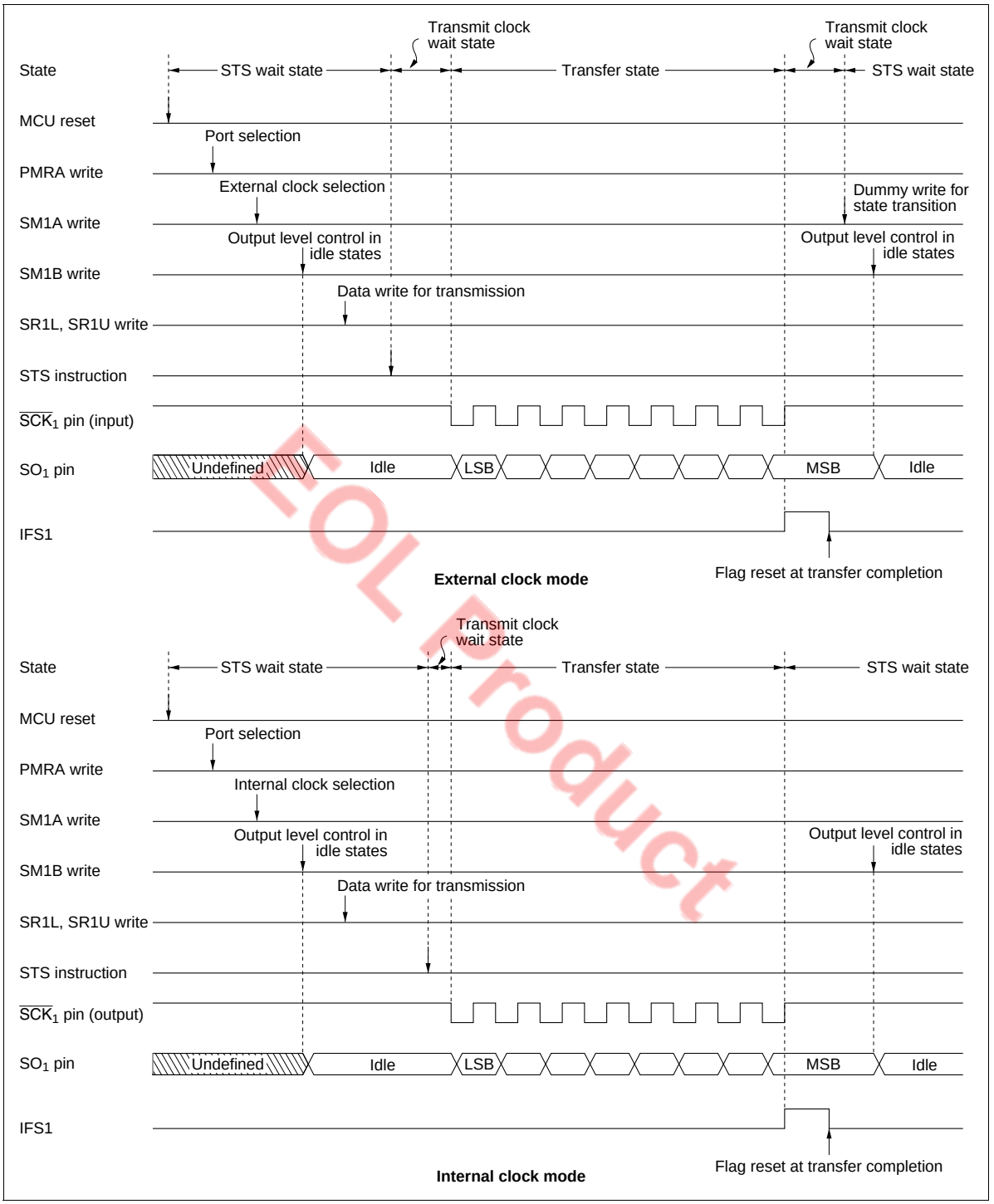

EOL Product

Figure 60 Example of Serial Interface Operation Sequence

Transmit Clock Error Detection (In External Clock Mode): The serial interface will malfunction if a spurious pulse caused by external noise conflicts with a normal transmit clock during transfer. A transmit clock error of this type can be detected as shown in figure 61. If more than eight transmit clocks are input in transfer state, at the eighth clock including a spurious pulse by noise, the octal counter reaches 000, the serial 1 interrupt request flag (IFS1: $003, bit 2) is set, and transmit clock wait state is entered. At the falling edge of the next normal clock signal, the transfer state is entered.

Meanwhile, in the interrupt handling routine, transfer end processing is performed, the serial 1 interrupt request flag is reset, and a dummy write is performed to serial mode register 1A (SM1A: $005). The serial interface then returns to the STS wait state, and the serial 1 interrupt request flag (IFS1: $003, 2) is set again. It is therefore possible to detect a serial clock error by testing the serial 1 interrupt request flag after the dummy write to serial mode register 1A.

EOL Product

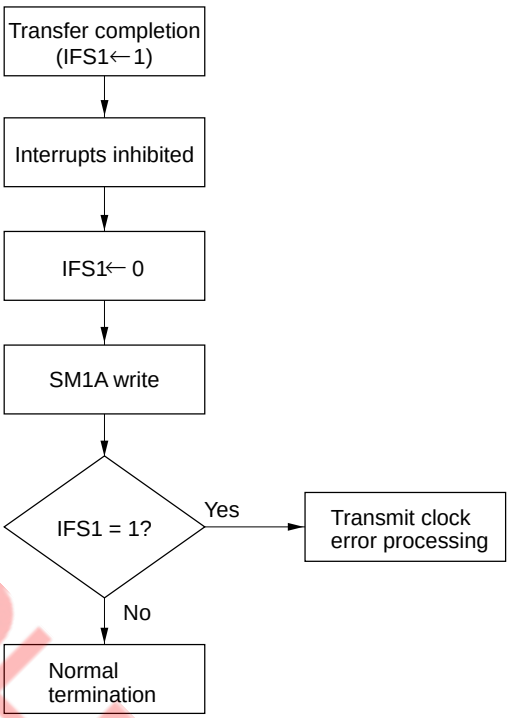

Transmit clock error detection flowchart

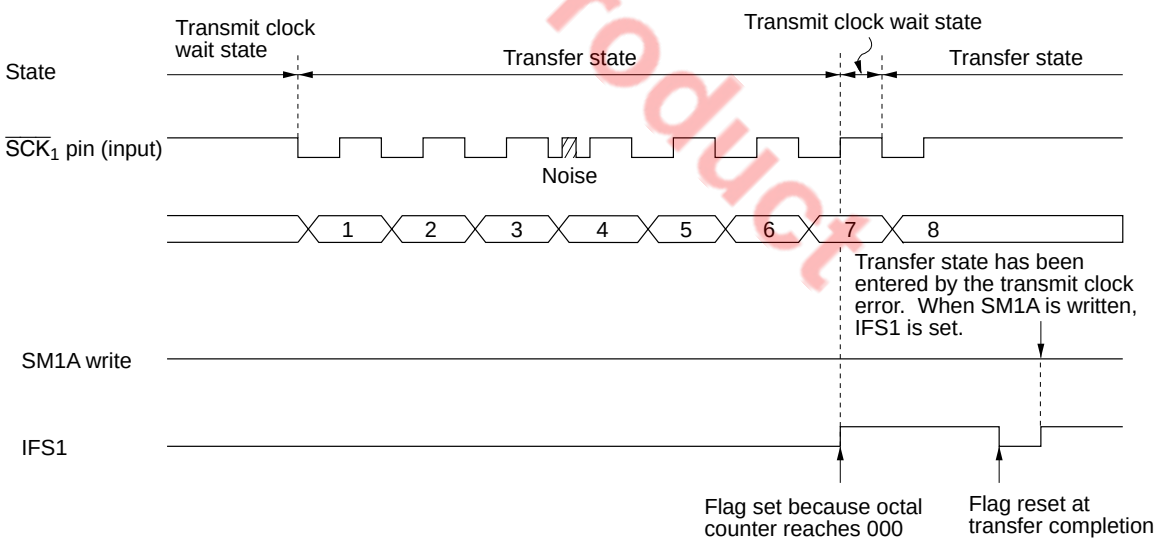

Transmit clock error detection procedure

Figure 61 Transmit Clock Error Detection

EOL Product

Notes on Use:

- Initialization after writing to registers: If port mode register A (PMRA: $004) is written to in transmit clock wait state or in transfer state, the serial interface must be initialized by writing to serial mode register 1A (SM1A: $005) again.

- Serial 1 interrupt request flag (IFS1: $003, bit 2) set: If the state is changed from transfer to another by writing to serial mode register 1A (SM1A: $005) or executing the STS instruction during the first low pulse of the transmit clock, the serial interrupt request flag 1 (IFS1: $003, 2) is not set. To set the serial interrupt request flag, serial mode register 1A (SM1A: $005) write or STS instruction execution must be programmed to be executed after confirming that the $\overline{SCK}_1$ pin is at 1, that is, after executing the input instruction to port R4.

Registers for Serial Interface

The serial interface operation is selected, and serial data is read and written by the following registers.

Serial Mode Register 1A (SM1A: $005)
Serial Mode Register 1B (SM1B: $028)
Serial Data Register 1 (SR1L: $006, SR1U: $007)
Port Mode Register A (PMRA: $004)
Miscellaneous Register (MIS: $00C)

Serial Mode Register 1A (SM1A: $005): This register has the following functions (figure 62).

- $R4_1/\overline{SCK}_1$ pin function selection
- Transfer clock selection
- Prescaler division ratio selection
- Serial interface initialization

Serial mode register 1A (SM1A: $005) is a 4-bit write-only register. It is reset to $0 by an MCU reset or when the MCU switches to stop mode.

A write signal input to serial mode register 1A (SM1A: $005) discontinues the input of the transmit clock to the serial data register 1 (SR1L: $006, SR1U: $007) and octal counter, and the octal counter is reset to 000. Therefore, if a write is performed during data transfer, the serial 1 interrupt request flag (IFS1: $003, bit 2) is set.

Written data is valid from the second instruction execution cycle after the write operation, so the STS instruction must be executed at least two cycles after that.

EOL Product

Serial mode register 1A (SM1A: $005)

Bit	3	2	1	0
Initial value	0	0	0	0
Read/Write	W	W	W	W
Bit name	SM1A3	SM1A2	SM1A1	SM1A0

SM1A3	$R4_1/\overline{SCK_1}$ mode selection
0	$R4_1$
1	$\overline{SCK_1}$

SM1A2	SM1A1	SM1A0	$\overline{SCK_1}$	Clock source	Prescaler division ratio
0	0	0	Output	Prescaler	Refer to table 20
		1			
	1	0			
		1			
1	0	0			
		1			
	1	0	Output	System clock	—
		1	Input	External clock	—

Figure 62 Serial Mode Register 1A (SM1A)

Serial Mode Register 1B (SM1B: $028): This register has the following functions (figure 63).

- Serial clock division ratio selection
- High/low level control in idle states

Serial mode register 1B (SM1B: $028) is a 2-bit write-only register. It cannot be written during data transfer.

Setting bit 0 (SM1B0) of the serial mode register 1B (SM1B: $028) selects the divisor applied to the prescaler output used for the transfer clock. Only bit 0 (SM1B0) is cleared to 0 by an MCU reset or when the MCU switches to stop mode.

Bit 1 (SM1B1) of the serial mode register (SM1B: $028) controls the high/low state of the SO_1 pin during idle. The SO_1 pin changes state as soon as the high/low control bit is written. The value of this bit is undefined after a reset or when the MCU enters stop mode.

EOL Product

Serial mode register 1B (SM1B: $028)

Bit	3	2	1	0
Initial value	—	—	Undefined	0
Read/Write	—	—	W	W
Bit name	Not used	Not used	SM1B1	SM1B0

SM1B1	Output level control in idle states	SM1B0	Transmit clock division ratio
0	Low level	0	Prescaler output divided by 2
1	High level	1	Prescaler output divided by 4

Figure 63 Serial Mode Register 1B (SM1B)

Serial Data Register 1 (SR1L: $006, SR1U: $007): This register has the following functions (figures 64 and 65).

- Transmission data write and shift
- Receive data shift and read

Writing data in this register is output from the SO_1 pin, LSB first, synchronously with the falling edge of the transmit clock; data is input, LSB first, through the SI_1 pin at the rising edge of the transmit clock. Input/output timing is shown in figure 66.

Data cannot be read or written during serial data transfer. If a read/write occurs during transfer, the accuracy of the resultant data cannot be guaranteed.

EOL Product

Serial data register 1 (lower digit) (SR1L: $006)

Bit	3	2	1	0
Initial value	Undefined	Undefined	Undefined	Undefined
Read/Write	R/W	R/W	R/W	R/W
Bit name	SR1L3	SR1L2	SR1L1	SR1L0

Figure 64 Serial Data Register 1 (SR1L)

Serial data register 1 (upper digit) (SR1U: $007)

Bit	3	2	1	0
Initial value	Undefined	Undefined	Undefined	Undefined
Read/Write	R/W	R/W	R/W	R/W
Bit name	SR1U3	SR1U2	SR1U1	SR1U0

Figure 65 Serial Data Register 1 (SR1U)

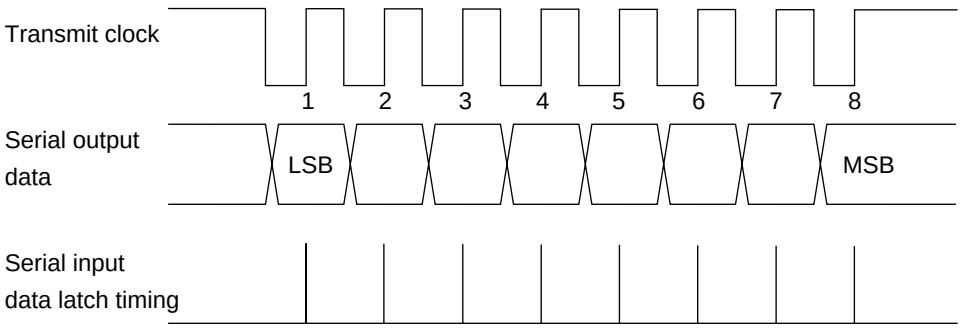

Figure 66 Serial Interface Output Timing

Port Mode Register A (PMRA: $004): This register has the following functions (figure 67).

- $R4_2/SI_1$ pin function selection
- $R4_3/SO_1$ pin function selection

Port mode register A (PMRA: $004) is a 2-bit write-only register. It is reset to "--00" by an MCU reset or when the MCU switches to stop mode.

EOL Product

Port mode register A (PMRA: $004)

Bit	3	2	1	0
Initial value	—	—	0	0
Read/Write	—	—	W	W
Bit name	Not used	Not used	PMRA1	PMRA0

PMRA1	$R4_2/SI_1$ mode selection
0	$R4_2$
1	SI_1

PMRA0	$R4_3/SO_1$ mode selection
0	$R4_3$
1	SO_1

Figure 67 Port Mode Register A (PMRA)

Miscellaneous Register (MIS: $00C): This register has the following function (figure 68).

- $R4_3/SO_1$ pin PMOS control

Miscellaneous register (MIS: $00C) is a 4-bit write-only register and is reset to $0 by an MCU reset or in stop mode.

Miscellaneous register (MIS: $00C)

Bit	3	2	1	0
Initial value	0	0	0	0
Read/Write	W	W	W	W
Bit name	MIS3	MIS2	MIS1	MIS0

MIS3	Pull-up/Pull-down MOS control
0	Off
1	On

MIS2	$R4_3/SO_1$ PMOS control
0	On
1	Off

MIS1	MIS0	t_{RC}
0	0	0.12207 ms
		0.24414 ms*
	1	7.8125 ms
1	0	31.25 ms
	1	Not used

Note: * The value is applied only when direct transfer operation is used.

Figure 68 Miscellaneous Register (MIS)

EOL Product

DTMF Generation Circuit

The MCU provides a dual-tone multifrequency (DTMF) generation circuit. Figure 69 shows a block diagram of the DTMF circuit. A DTMF signal consists of two sine waves corresponding to the numbers and symbols on a telephone keypad. DTMF signals are used to access telephone switching equipment. Figure 70 shows the DTMF frequency matrix.

The OSC clock (400 kHz, 800 kHz, 2 MHz, 3.58 MHz, 4 MHz, 7.16 MHz, or 8 MHz) is changed into seven clock signals through the division circuit (1/2, 1/5, 1/9*, 1/10, 1/18*, and 1/20). The DTMF circuit uses one of the seven clock signals, which is selected by the system clock select register 1, 2 (SSR1: $029, SSR2: $02A) depending on the OSC clock frequency. The DTMF circuit has transformed programmable dividers, sine wave counters, and control registers.

The DTMF generation circuit is controlled by the following three registers.

EOL Product

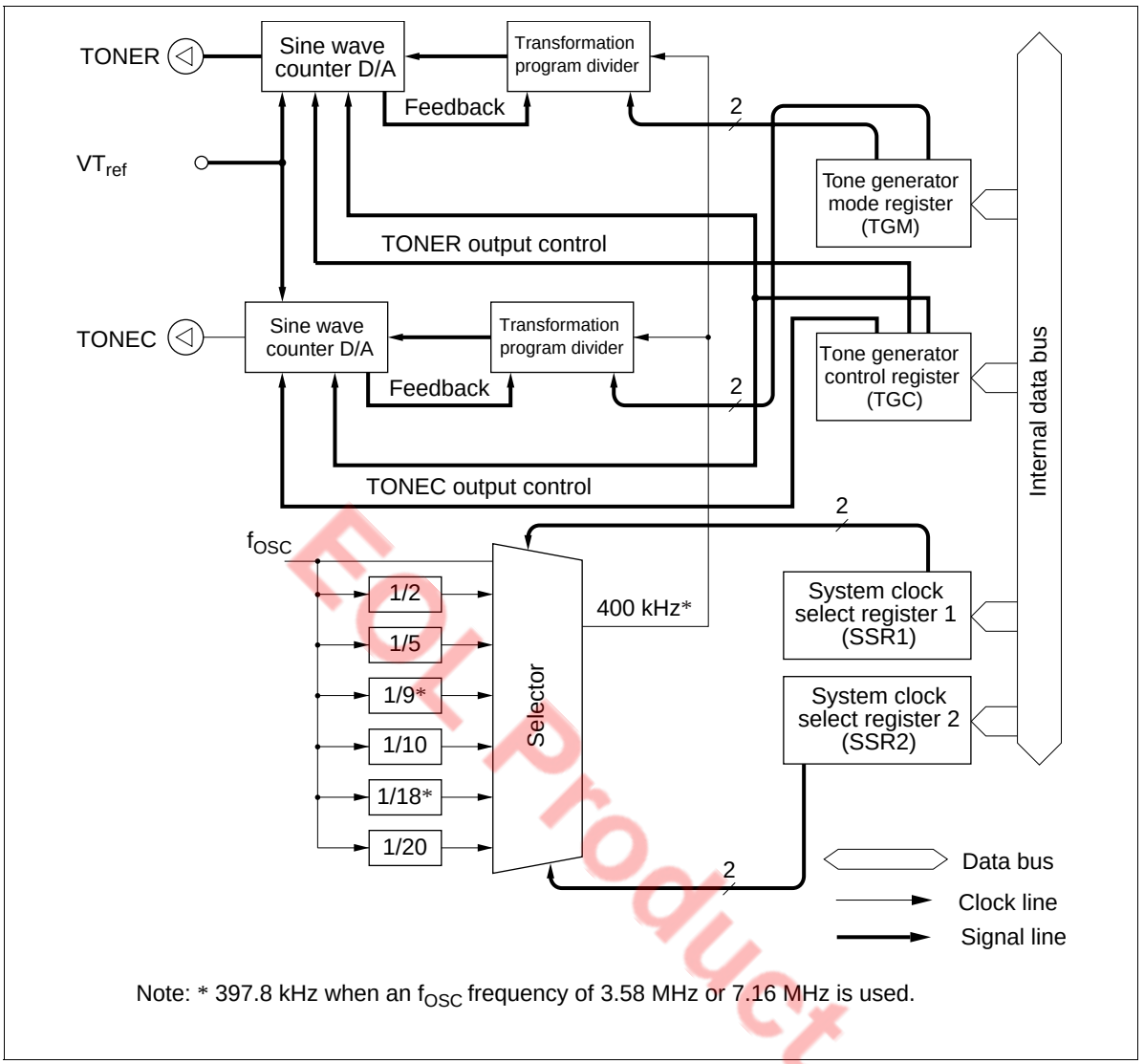

EOL Product

Figure 69 Block Diagram of DTMF Circuit

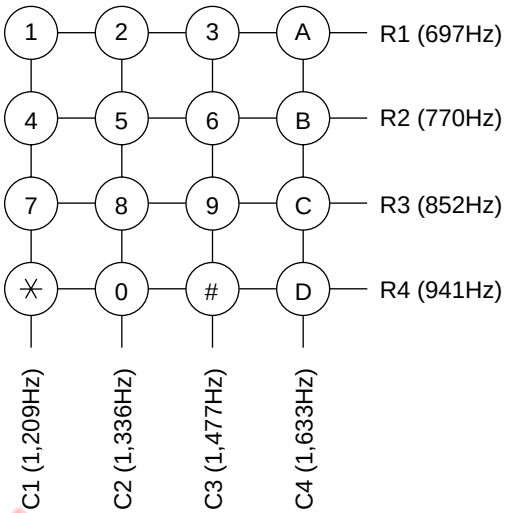

Figure 70 DTMF Keypad and Frequencies

Tone Generator Mode Register (TGM: $019): The tone generator mode register (TGM: $019) is a 4-bit write-only register that controls the generated DTMF frequencies as shown in figure 71. TGM is initialized to $0 by an MCU reset or in stop mode, watch mode, and subactive mode.

Tone generator mode register (TGM: $019)

Bit	3	2	1	0
Initial value	0	0	0	0
Read/Write	W	W	W	W
Bit name	TGM3	TGM2	TGM1	TGM0

TGM3	TGM2	TONEC output frequencies
0	0	C1 (1,209 Hz)
0	1	C2 (1,336 Hz)
1	0	C3 (1,477 Hz)
1	1	C4 (1,633 Hz)

TGM1	TGM0	TONER output frequencies
0	0	R1 (697 Hz)
0	1	R2 (770 Hz)
1	0	R3 (852 Hz)
1	1	R4 (941 Hz)

Figure 71 Tone Generator Mode Register (TGM)

EOL Product

Tone Generator Control Register (TGC: $01A): The tone generator control register (TGC: $01A) is a 3-bit write-only register that controls starting and stopping of DTMF signal generation as shown in figure 72. TGC is initialized to 000- by an MCU reset or in stop mode, watch mode, or subactive mode. TONEC output and TONER output are controlled individually by TGC3 and TGC2, and overall DTMF control is performed by TGC1.

Tone generator control register (TGC: $01A)

Bit	3	2	1	0
Initial value	0	0	0	—
Read/Write	W	W	W	—
Bit name	TGC3	TGC2	TGC1	Not used

TGC3	TONEC output control (column)
0	No output
1	TONEC output (active)

TGC1	DTMF enable bit
0	DTMF disable
1	DTMF enable

TGC2	TONER output control (row)
0	No output
1	TONER output (active)

EOL Product

Figure 72 Tone Generator Control Register (TGC)

System Clock Select Registers 1 and 2 (SSR1: $029 and SSR2: $02A): The system clock select registers 1 and 2 (SSR1: $029 and SSR2: $02A) are 4-bit write-only registers. Applications must set these registers to the values shown in figure 73 that correspond to the frequency of the oscillator circuit connected to the OSC_1 and OSC_2 pins. If the oscillator frequency and the system clock select register settings differ from the combination shown in figure 73, the DTMF output frequencies will not have the correct values as shown in figure 71.

Except for the SSR13 bit, the system clock select registers 1 and 2 (SSR1: $029 and SSR2: $02A) are initialized to $0 by an MCU reset or when the MCU switches to stop mode.

System clock select register 1 (SSR1: $029)

Bit	3	2	1	0
Initial value	0	0	0	0
Read/Write	W	W	W	W
Bit name	SSR13*1	SSR12	SSR11	SSR10

SSR12	32 kHz division ratio switch
0	$f_{SUB}=f_X/8$
1	$f_{SUB}=f_X/4$

SSR13	32 kHz oscillation stop setting
0	Oscillation continues in stop mode
1	Oscillation stops in stop mode

SSR23	SSR22	SSR11	SSR10	System clock selection
0	0	0	0	400kHz
			1	800 kHz
		1	0	2 MHz
			1	4 MHz
	1	×	×	3.58 MHz
1	0	1	1	8 MHz
	1	×	×	7.16 MHz

×: Don't care

System clock select register 2 (SSR2: $02A)

Bit	3	2	1	0
Initial value	0	0	0	0
Read/Write	W	W	W	W
Bit name	SSR23	SSR22	SSR21	SSR20

SSR21	SSR20	System clock division ratio selection*2
0	0	Division by 4
	1	Division by 8
1	0	Division by 16
	1	Division by 32

Notes: 1. SSR13 is cleared to 0 only by RESET input. In the case of $\overline{\text{STOPC}}$ input in stop mode it retains its current value. SSR13 is not reset in stop mode

2. The DTMF generation circuit frequencies are not affected by the system clock division ratio setting.

EOL Product

Figure 73 System Clock Select Register 1 and 2 (SSR1, SSR2)

DTMF Output: The sine waves of the row-group and column-group are output from the DTMF output pins (TONER and TONEC). These are output by a high-precision resistance-ladder type D/A converter. Figure 74 shows the TONE output pin equivalent circuit, and figure 75 shows the output waveform. One output waveform cycle is composed of 32 slots, giving stable output with a low distortion factor. Table 21 shows the deviation of the output frequencies with respect to the standard DTMF signals.

Table 21 Frequency Deviation of the MCU from Standard DTMF (f_{osc}=400kHz, 800kHz, 2MHz, 4MHz, 8MHz)

	Standard DTMF (Hz)	MCU (Hz)	Deviation from Standard (%)
R1	697	694.44	–0.37
R2	770	769.23	–0.10
R3	852	851.06	–0.11
R4	941	938.97	–0.22
C1	1,209	1,212.12	0.26
C2	1,336	1,333.33	–0.20
C3	1,477	1,481.48	0.30
C4	1,633	1,639.34	0.39

Table 22 Frequency Deviation of the MCU from Standard DTMF (f_{osc}=3.58kHz, 7.16MHz)

	Standard DTMF (Hz)	MCU (Hz)	Deviation from Standard (%)
R1	697	690.58	–0.92
R2	770	764.96	–0.65
R3	852	846.33	–0.67
R4	941	933.75	–0.77
C1	1,209	1,205.39	–0.30
C2	1,336	1,325.92	–0.75
C3	1,477	1,473.25	–0.25
C4	1,633	1,630.23	–0.17

Notes: 1. The DTMF signal frequency deviation must be within ±1.5%, totaling the values in tables 21 and 22 and the precision of the oscillator used. When an f_{osc} frequency of 3.58 MHz or 7.16 MHz is used, in particular, the frequency deviation is greater (max - 0.92%) than with an f_{osc} frequency of 400 kHz, 800 kHz, 2 MHz, 4 MHz, or 8 MHz, and thorough consultation with the oscillator manufacturer is essential before deciding on the oscillator to be used.

2. This frequency deviation does not include the frequency deviation of the oscillator. Also, the ratio of oscillator waveform high-level width and low-level width in this case is 50% : 50%.

EOL Product

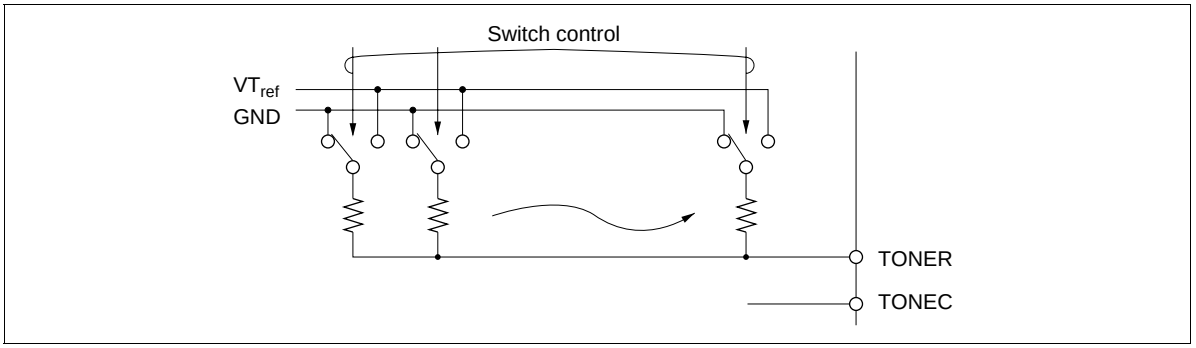

Figure 74 Tone Output Equivalent Circuit

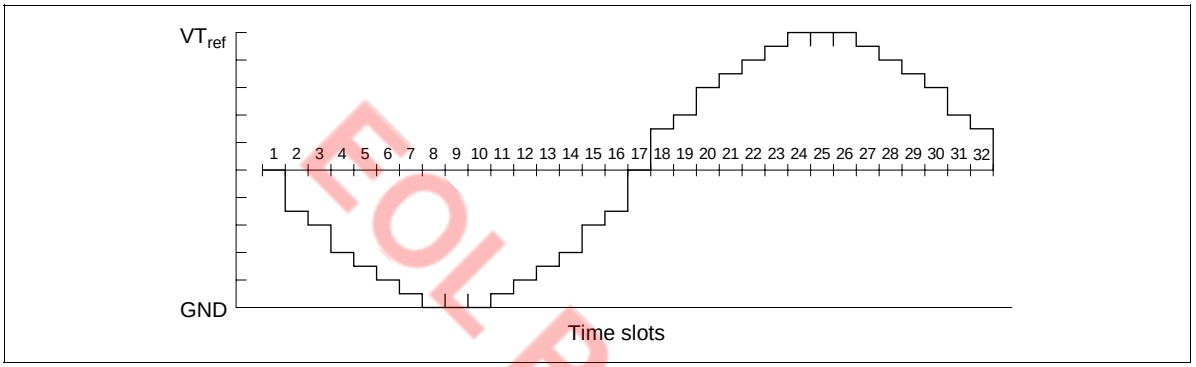

Figure 75 Waveform of Tone Output

EOL Product

Comparator

The MCU has a built-in comparator that compare an input voltage with the reference voltage (V_{Cref}). The comparator block diagram is shown in figure 76.

The comparator can operate in active mode and subactive mode. They are halted in other modes.

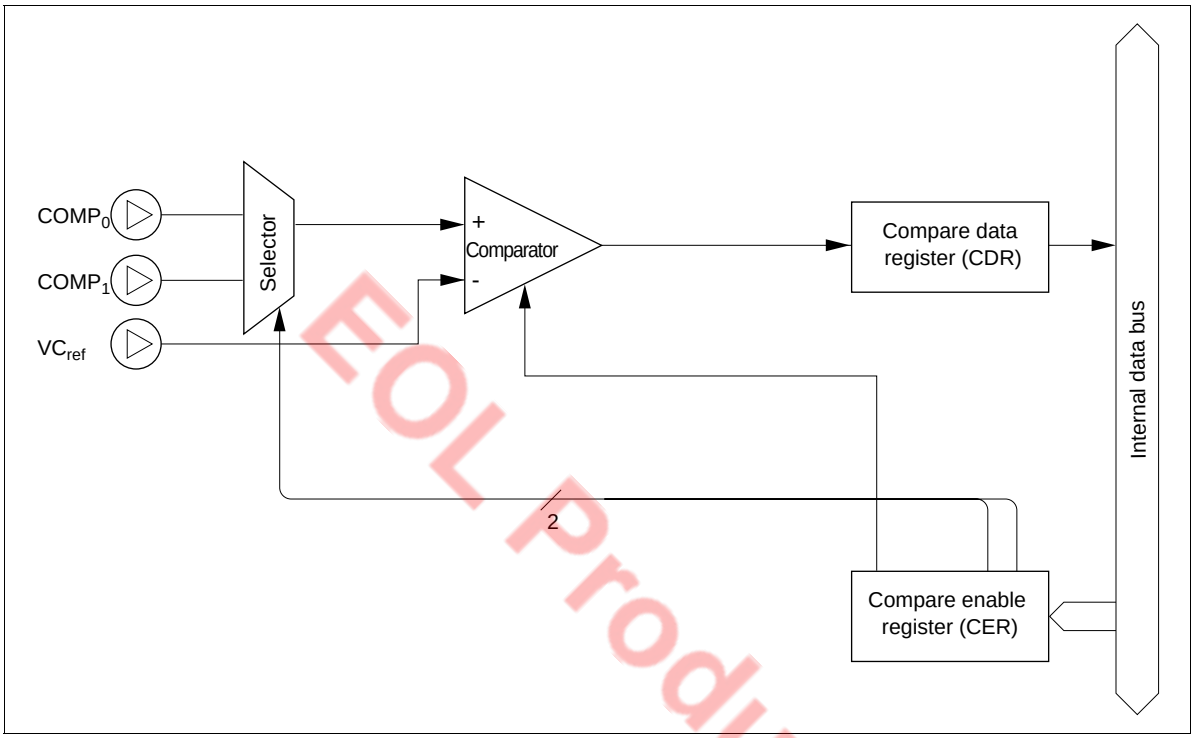

Figure 76 Comparator Block Diagram

EOL Product

Comparator Operation

(1) Analog input pin selection is performed by bits 0 and 1 (CER0, CER1) of the compare enable register (CER). Setting bit 3 (CER3) to 1 places the $RD_0/COMP_0$ and $RD_1/COMP_1$ pins in analog input mode and starts comparator operation. While comparator operation is in progress, none of these pins (including pins not used for comparison) can be used as R port pins.

(2) The compare result can be read by means of a bit test instruction (TM or TMD) on the compare data register (CDR) bit corresponding to the selected analog input pin.

Registers Used by Comparator

- Compare enable register (CER: $018)
- Compare data register (CDR: $017)

Compare enable register (CER: $018): The compare enable register (CER) is a 3-bit write-only register that selects comparator operation and the analog input pin (figure 77).

CER is reset by an MCU reset or in stop mode.

Compare enable register (CER: $018)

Bit	3	2	1	0
Initial value	0	—	0	0
Read/Write	W	—	W	W
Bit name	CER3	Not Used	CER1	CER0

CER1	CER0	Analog input pin selection
0	0	$COMP_0$
	1	$COMP_1$
1	×	Not Used

CER3	Comparator operation selection
0	Comparator operation not selected: Digital input mode $RD_0/COMP_0$ and $RD_1/COMP_1$ pins function as R port pins
1	Comparator operation selected: Analog input mode $RD_0/COMP_0$ and $RD_1/COMP_1$ pins function as comparator pins

× : Don't care

Figure 77 Compare Enable Register (CER)

Compare data register (CDR: $017): The compare data register (CDR) is a 2-bit read-only register that holds the result of the comparison between the analog input pin and the reference voltage (figure 78).

When comparator operation is started (CER3 is set to 1), the result of the comparison between the analog input pin selected by the compare enable register (CER) and the reference voltage is read into the corresponding bit of the compare data register (CDR). The value of the other bits in CDR is undetermined. The CDR value is not retained after the comparator operation (when CER3 = 0), and is undetermined except during comparator operation.

EOL Product

Compare data register (CDR: $017)

Bit	3	2	1	0
Initial value	—	—	Undetermined	Undetermined
Read/Write	—	—	R	R
Bit name	Not Used	Not Used	CDR1	CDR0

CDR 0	Result of comparison between $COMP_0$ pin and reference voltage
0	$COMP_0$ pin < reference voltage
1	$COMP_0$ pin > reference voltage

CDR1	Result of comparison between $COMP_1$ pin and reference voltage
0	$COMP_1$ pin < reference voltage
1	$COMP_1$ pin > reference voltage

Figure 78 Compare Data Register (CDR)

EOL Product

ZTAT™ Microcomputer with Built-in Programmable ROM

1. Precautions for use of ZTAT™ microcomputer with built-in programmable ROM

(1) Precautions for writing to programmable ROM built in ZTAT™ microcomputer

In the ZTAT™ microcomputer with built-in plastic mold one-time programmable ROM, incomplete electrical connection between the PROM writer and socket adapter causes writing errors and, makes the computer unoperatable. To enhance the writing efficiency, attention should be paid to the following points:

(a) Make sure that the socket adapter is firmly fixed to the PROM writer and connected electrically with each other (neither opened nor shorted), before starting the writing process.

(b) To secure the electrical connection between the contact pin and IC lead, make sure that there is no foreign substance on the contact pin of the socket adapter, which may cause improper electrical connection.

(c) When inserting the IC, be careful to protect the IC lead from bending in order to secure the electrical connection between the contact pin and IC lead. If the lead is bent, correct the bending and insert it again.

(d) If any trouble is noticed during a blank check to be performed to prevent erroneous writing due to improper electrical connection, carry out the writing process again according to above steps (a), (b), and (c).

(e) During the writing process, do not touch the socket adapter and IC to prevent erroneous writing.

(f) To write continuously in the IC, follow steps (a), (b), (c), (d) and (e).

(g) If a writing error recurs, or the rate of writing errors occur frequently, stop writing and check the PROM writer, socket adapter, etc. for defects.

(h) If any problem is noticed in the written program or in the program after being left at a high temperature, consult our technical staff.

EOL Product

(2) Precautions when new PROM writer, socket adapter or IC is used

When a new PROM writer, socket adapter or IC is employed, breakdown of the IC may occur or its writing may become impossible because the noise, overshoot, timing or other electrical characteristics may be inconsistent with the assured IC writing characteristics. To avoid such troubles, check the following points before starting the writing process.

(a) To ensure stable writing operation, check that the V_{CC} of the power supplied to the PROM writer, power source current capacity of V_{PP}, and current consumption at the time of writing to IC are provided with sufficient margin.

(b) To prevent breakdown of the IC, check that the power source voltage between GND-V_{CC} and GND-V_{PP}, and overshoot or undershoot of the power source at the connecting terminal of the socket adapter are within the ratings. Particularly, if the overshoot or undershoot exceeds the maximum rating, the pin connection may be damaged, leading to permanent breakdown. If overshoot or undershoot occurs, recheck the power source damping resistance of capacity.

(c) To prevent breakdown of the IC and for stable writing and reading operation, insert the IC into the socket adapter and check the power noise between the GND-V_{CC} and GND-V_{PP} near the IC connecting

terminal. If power source noise is noticed, insert an appropriate capacitor between the GND power sources depending on the noise generated. In case of high frequency noise, insert a capacitor of low inductance.

(d) For stable writing and reading operation, insert the IC into the socket adapter and check the input waveform, timing and noise near the R/W, CS, address and data terminals. Particularly, since recent ICs have increased in speed, caution should be exercised against the noise to the power source or address due to crosstalk from the output data terminal. To avoid these problems, inserting a low inductance capacitor between the GND and power source or inserting a damping resistance to the output data terminal is effective.

(e) Particularly, when a multiple PROM writer is used, perform above items (a), (b), (c), and (d) assuming all ICs inserted into the socket adapter.

(f) In the case of a multiple PROM writer, when an unacceptable result is noticed during a blank check performed to prevent erroneous writing due to improper electrical connection of the power source, etc., rewriting is impossible unless every writing process can be stopped. Therefore, the potential increases due to erroneous writing because of improper connection. Be sure to check the electrical connection between the PROM writer and socket adapter and IC.

(g) If any abnormality is noticed while checking a written program, consult our technical staff.

EOL Product

2. Programming of Built-in programmable ROM

The MCU can stop its function as an MCU in PROM mode for programming the built-in PROM.

PROM mode is set up by setting the $\overline{TEST}$, $\overline{M}_0$, and $\overline{M}_1$ terminals to “Low” level and the RESET terminal to “High” level.

Writing and reading specifications of the PROM are the same as those for the commercial EPROM27256. Using a socket adapter for specific use of each product, programming is possible with a general-purpose PROM writer.

Since an instruction of the HMCS400 series is 10 bits long, a conversion circuit is incorporated to adapt the general-purpose PROM writer. This circuit splits each instruction into five lower bits and five higher bits to write from or read to two addresses. This enables use of a general-purpose PROM. For instance, to write to a 16kword of built-in PROM with a general-purpose PROM writer, specify 32kbyte address ($0000-$7FFF). An example of PROM memory map is shown in figure 80.

Notes:

1. When programming with a PROM writer, set up each ROM size to the address given in table 24. If it is programmed erroneously to an address given in Table 24 or later, check of writing of PROM may become impossible. Particularly, caution should be exercised in the case of a plastic package since reprogramming is impossible with it. Set the data in unused addresses to $FF.
2. If the indexes of the PROM writer socket, socket adapter and product are not aligned precisely, the product may break down due to overcurrent. Be sure to check that they are properly set to the writer before starting the writing process.

3. Two levels of program voltages (V_{PP}) are available for the PROM: 12.5 V and 21 V. Our product employs a V_{PP} of 12.5 V. If a voltage of 21 V is applied, permanent breakdown of the product will result. The V_{PP} of 12.5 V is obtained for the PROM writer by setting it according to the Intel 27256 specifications.

Writing/verification

Programming of the built-in program ROM employs a high speed programming method. With this method, high speed writing is effected without voltage stress to the device or without damaging the reliability of the written data.

A basic programming flow chart is shown in figure81 and a timing chart in figure82.

For precautions for PROM writing procedure, refer to "ZTAT™ Microcomputer On-chip Programmable ROM Characteristics and Usage Notes."

Table 23 Selection of Mode

	Pins			
Mode	**$\overline{CE}$**	**$\overline{OE}$**	**V_{PP}**	**O_0–O_4**
Writing	“Low”	“High”	V_{PP}	Data input
Verification	“High”	“Low”	V_{PP}	Data output
Prohibition of programming	“High”	“High”	V_{PP}	High impedance

Table 24 PROM Writer Program Address

ROM size	Address
8k	$0000~$3FFF
12k	$0000~$5FFF
16k	$0000~$7FFF

EOL Product

Programmable ROM (HD407A4669)

The HD407A4669 is a ZTAT™ microcomputer with built-in PROM that can be programmed in PROM mode.

PROM Mode Pin Description

Pin No.	MCU Mode		PROM Mode		Pin No.	MCU Mode		PROM Mode	
FP-64A	Pin Name	I/O	Pin Name	I/O	FP-64A	Pin Name	I/O	Pin Name	I/O
1	RE_0/VC_{ref}	I			33	$R3_3$	I/O		
2	$\overline{TEST}$	I	GND	–	34	$R3_2$/TOD	I/O		
3	OSC_1	I	V_{CC}	–	35	$R3_1$/TOC	I/O		
4	OSC_2	O			36	$R4_0$/EVND	I/O		
5	RESET	I	V_{CC}	–	37	$R4_1/\overline{SCK}_1$	I/O		
6	X1	I	GND	–	38	$R4_2/SI_1$	I/O		
7	X2	O			39	$R4_3/SO_1$	I/O		
8	GND	–	GND	–	40	$R6_0$	I/O	A_1	I
9	D_0	I/O	$\overline{CE}$	I	41	$R6_1$	I/O	A_2	I
10	D_1	I/O	$\overline{OE}$	I	42	$R6_2$	I/O	A_3	I
11	D_2	I/O	V_{CC}	–	43	$R6_3$	I/O	A_4	I
12	D_3	I/O	V_{CC}	–	44	$R7_0$	I/O	O_0	I/O
13	D_4	I/O			45	$R7_1$	I/O	O_1	I/O
14	D_5	I/O			46	$R7_2$	I/O	O_2	I/O
15	D_9	I/O			47	$R7_3$	I/O	O_3	I/O
16	D_{10}	I/O	A_{13}	I	48	$R8_0$	I/O	O_4	I/O
17	D_{11}	I/O	A_{14}	I	49	$R8_1$	I/O		
18	$D_{12}/\overline{STOPC}$	I	A_9	I	50	$R8_2$	I/O		
19	$D_{13}/\overline{INT}_0$	I	V_{PP}	–	51	$R8_3$	I/O		
20	$R0_0/\overline{INT}_1$	I/O	GND	–	52	$R9_0$	I/O	O_4	I/O
21	$R0_1/INT_2$	I/O	GND	–	53	$R9_1$	I/O	O_3	I/O
22	$R0_2/INT_3$	I/O			54	$R9_2$	I/O	O_2	I/O
23	$R0_3/INT_4$	I/O			55	$R9_3$	I/O	O_1	I/O
24	$R1_0$	I/O	A_5	I	56	RA_0	I/O	O_0	I/O
25	$R1_1$	I/O	A_6	I	57	RA_1	I/O	V_{CC}	–
26	$R1_2$	I/O	A_7	I	58	SEL	I		
27	$R1_3$	I/O	A_8	I	59	V_{CC}	–	V_{CC}	–
28	$R2_0$	I/O	A_0	I	60	TONEC	O		
29	$R2_1$	I/O	A_{10}	I	61	TONER	O		
30	$R2_2$	I/O	A_{11}	I	62	VT_{ref}	I		
31	$R2_3$	I/O	A_{12}	I	63	$RD0/COMP_0$	I		
32	$R3_0$	I/O			64	$RD1/COMP_1$	I		

EOL Product

Notes: 1. I/O: I/O pin, I: Input pin, O: Output pin

2. As there are two each of pins O_0 to O_4, the respective pairs should be shorted.

3. Unused data pins (O_5 to O_7) on the PROM programmer side should be handled as shown below on the socket side.

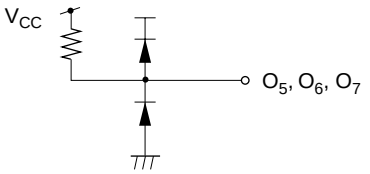

4. Pin A_9 should be handled as shown below on the socket side.

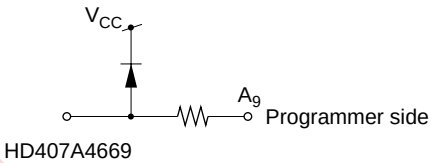

EOL Product

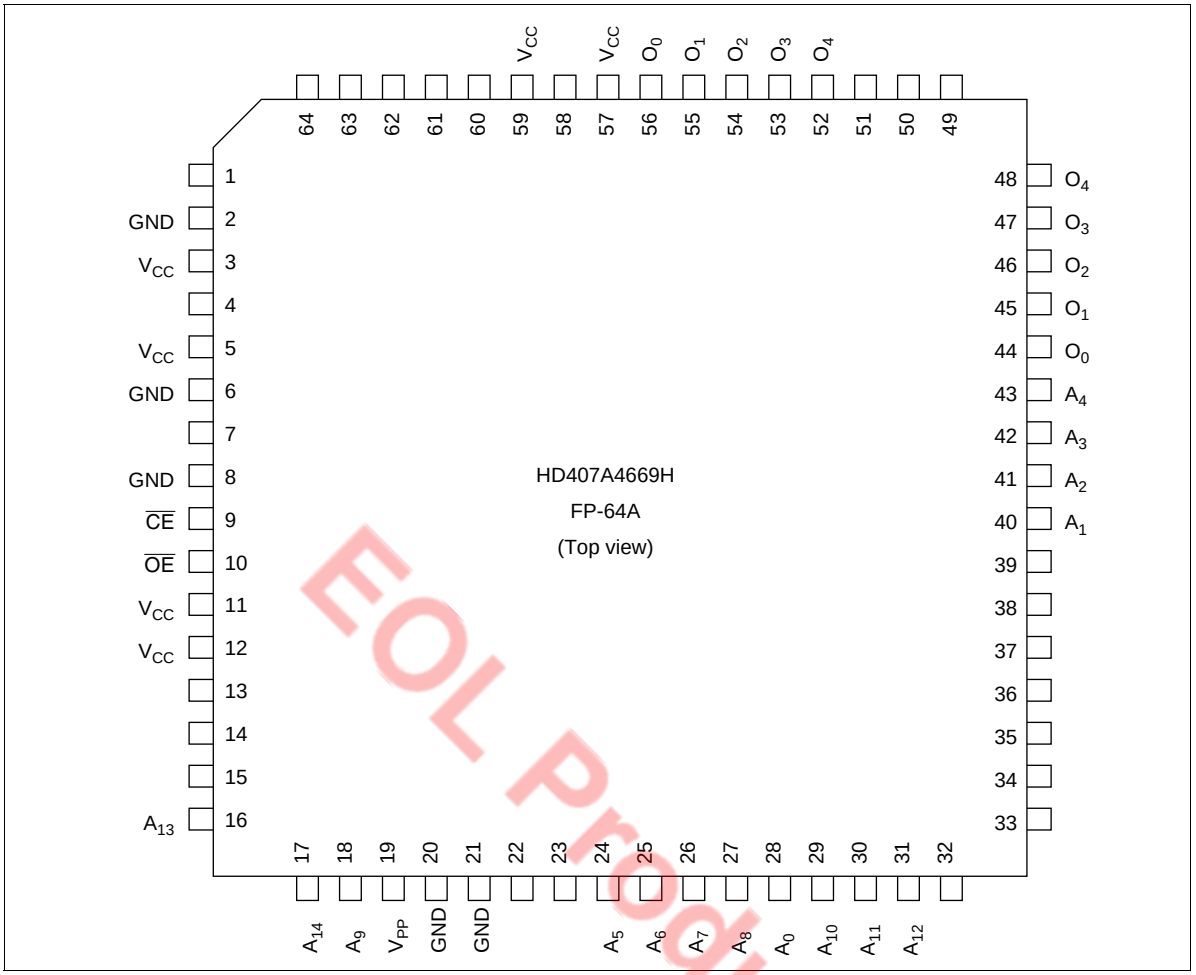

Figure 79 Pin Arrangement in PROM Mode

EOL Product

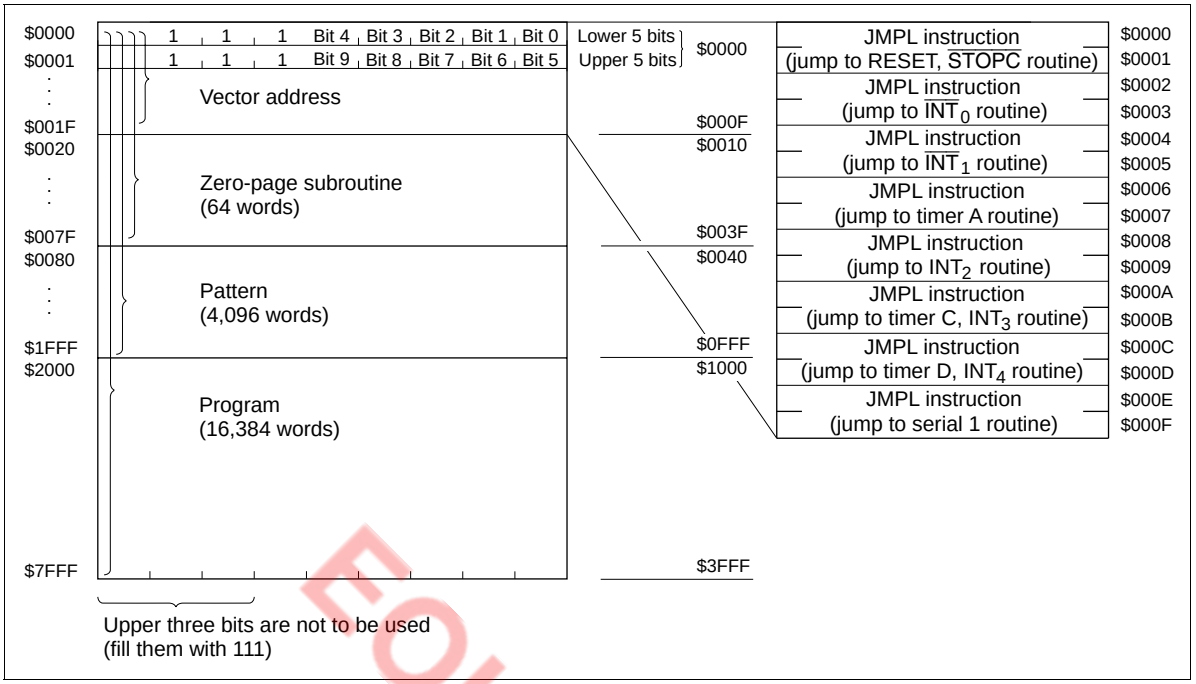

Figure 80 Memory Map in PROM Mode

EOL Product

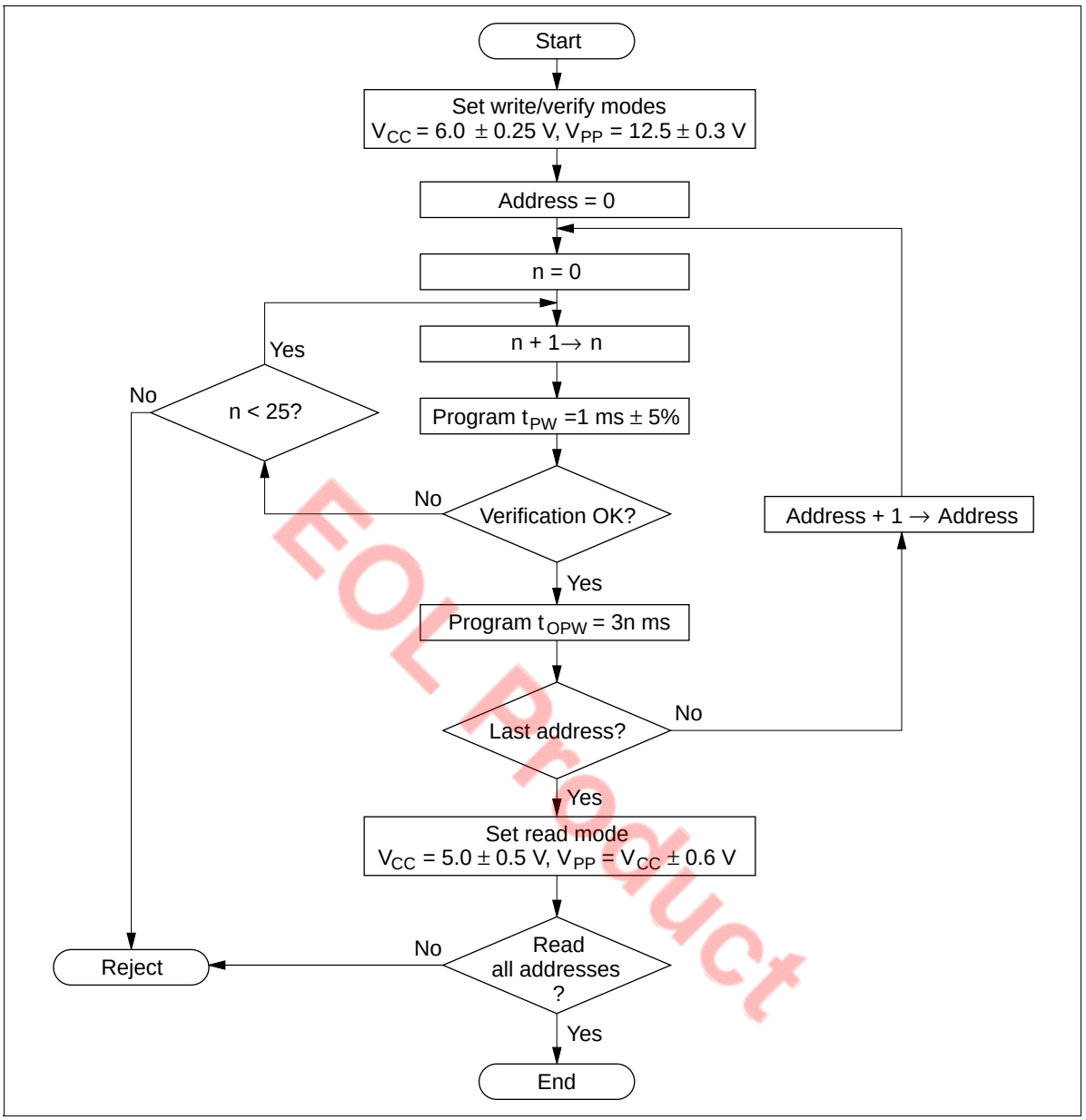

EOL Product

Figure 81 Flowchart of High-Speed Programming

Programming Electrical Characteristics

DC Characteristics (V_{CC} = 6.0 V ± 0.25 V, V_{PP} = 12.5 V ± 0.3 V, GND = 0V, T_a = 25°C ± 5°C, unless otherwise specified)

Item	Pin(s)	Symbol	Min	Typ	Max	Unit	Test Condition
Input high voltage level	O_0–O_4, A_0–A_{14}, $\overline{OE}$, $\overline{CE}$	V_{IH}	2.2	—	V_{cc} + 0.3	V	
Input low voltage level	O_0–O_4, A_0–A_{14}, $\overline{OE}$, $\overline{CE}$	V_{IL}	–0.3	—	0.8	V	
Output high voltage level	O_0–O_4	V_{OH}	2.4	—	—	V	I_{OH} = –200 µA
Output low voltage level	O_0–O_4	V_{OL}	—	—	0.4	V	I_{OL} = 1.6 mA
Input leakage current	O_0–O_4, A_0–A_{14}, $\overline{OE}$, $\overline{CE}$	$\lvert I_{IL} \rvert$	—	—	2	µA	V_{in} = 5.25 V/0.5 V
V_{cc} current		I_{cc}	—	—	30	mA	
V_{PP} current		I_{PP}	—	—	40	mA	

AC Characteristics (V_{CC} = 6.0 V ± 0.25 V, V_{PP} = 12.5 V ± 0.3 V, GND = 0V, T_a = 25°C ± 5°C, unless otherwise specified)

Item	Symbol	Min	Typ	Max	Unit	Test Condition
Address setup time	t_{AS}	2	—	—	µs	See figure 82
$\overline{OE}$ setup time	t_{OES}	2	—	—	µs	
Data setup time	t_{DS}	2	—	—	µs	
Address hold time	t_{AH}	0	—	—	µs	
Data hold time	t_{DH}	2	—	—	µs	
Data output disable time	t_{DF}	—	—	130	ns	
V_{PP} setup time	t_{VPS}	2	—	—	µs	
Program pulse width	t_{PW}	0.95	1.0	1.05	ms	
$\overline{CE}$ pulse width during overprogramming	t_{OPW}	2.85	—	78.75	ms	
V_{cc} setup time	t_{VCS}	2	—	—	µs	
Data output delay time	t_{OE}	0	—	500	ns	

Note: Input pulse level: 0.8 V to 2.2 V
Input rise/fall time: ≤ 20 ns
Input timing reference levels: 1.0 V, 2.0 V
Output timing reference levels: 0.8 V, 2.0 V

EOL Product

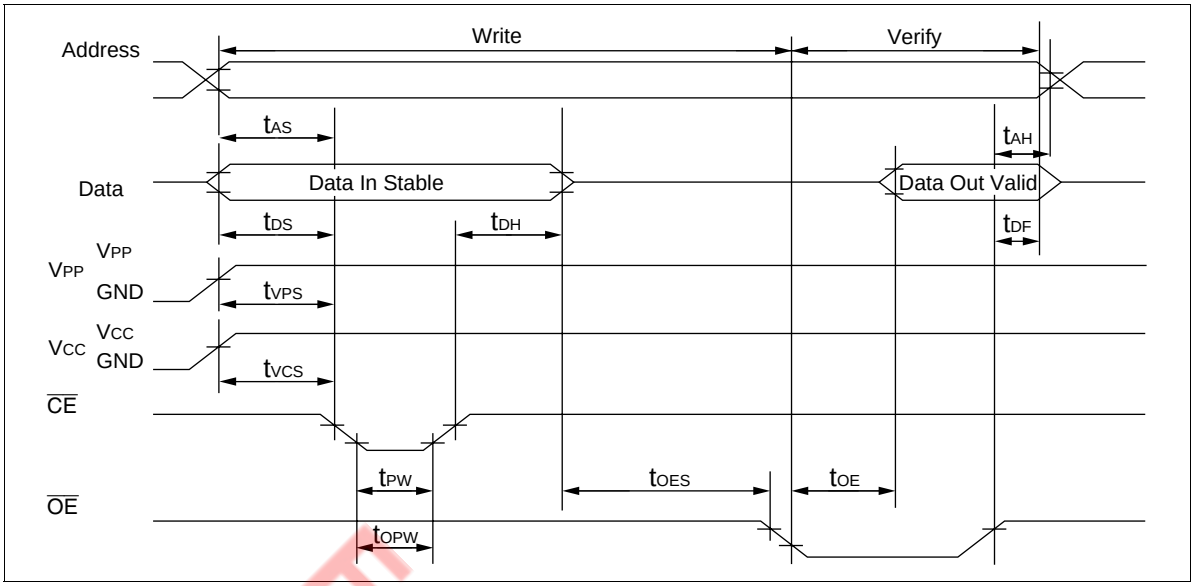

Figure 82 PROM Write/Verify Timing

EOL Product

ZTAT™ Microcomputer Usage Notes

ZTAT™ Microcomputer On-Chip Programmable ROM Characteristics and Useage Notes

Principles of Programming/Erasure: A memory cell in a ZTAT™ microcomputer is the same as an EPROM cell; it is programmed by applying a high voltage between its control gate and drain to inject hot electrons into its floating gate. These electrons are stable, surrounded by an energy barrier formed by an SiO_2 film. The change in threshold voltage of a memory cell with a charged floating gate makes the corresponding bit appear as 0.

The charge in a memory cell may decrease with time. This decrease is usually due to one of the following causes:

- Ultraviolet light excites electrons, allowing them to escape. This effect is the basis of the erasure principle.
- Heat excites trapped electrons, allowing them to escape.
- High voltages between the control gate and drain may erase electrons.

If the oxide film covering a floating gate is defective, the electron erasure rate will be greater. However, electron erasure does not often occur because defective devices are detected and removed at the testing stage.

EOL Product

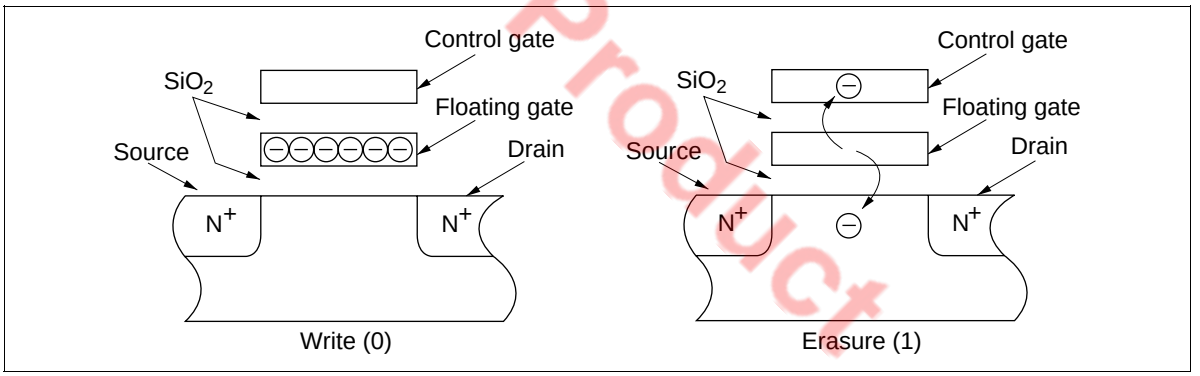

Figure 83 Cross-Sections of a PROM Cell

PROM Programming: PROM memory cells must be programmed under specific voltage and timing conditions. The higher the programming voltage V_{PP} and the longer the programming pulse t_{PW} is applied, the more electrons are injected into the floating gates. However, if V_{PP} exceeds specifications, the pn junctions may be permanently damaged. Pay particular attention to overshooting in the PROM programmer. In addition, note that negative voltage noise will produce a parasitic transistor effect that may reduce breakdown voltages.

The ZTAT™ microcomputer is electrically connected to the PROM programmer by a socket adapter. Therefore, note the following points:

- Check that the socket adapter is firmly mounted on the PROM programmer.
- Do not touch the socket adapter or the LSI during the programming. Touching them may affect the quality of the contacts, which will cause programming errors.

PROM Reliability after Programming: In general, semiconductor devices retain their reliability, provided that some initial defects can be excluded. These initial defects can be detected and rejected by screening. Baking devices under high-temperature conditions is one method of screening that can rapidly eliminate data-hold defects in memory cells. (Refer to the previous Principles of Programming/Erasure section.)

ZTAT™ microcomputer devices are extremely reliable because they have been subjected to such a screening method during the wafer fabrication process, but Hitachi recommends that each device be exposed to 150°C at one atmosphere after it is programmed, to ensure its best performance. The recommended screening procedure is shown in figure 84.

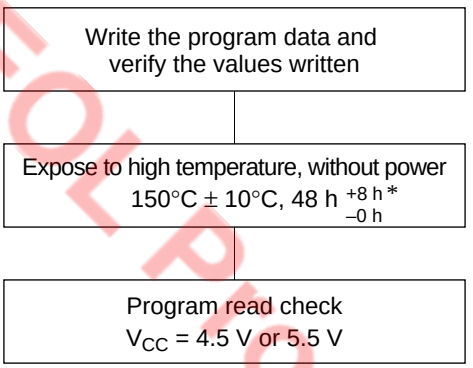

Note: * Exposure time is measured from when the temperature in the heater reaches 150°C.

Figure 84 Recommended Screening Procedure

Note: If programming errors occur continuously during PROM programming, suspend programming and check for problems in the PROM programmer or socket adapter, using a windowed-package microcomputer with on-chip EPROM, etc. ..... If programming verification indicates errors in programming or after high-temperature exposure, please inform Hitachi.

Write rate: A write rate of 95% or above is guaranteed.

EOL Product

Addressing Modes

RAM Addressing Modes

The MCU has three RAM addressing modes, as shown in figure 85 and described below.

Register Indirect Addressing Mode: The contents of the W, X, and Y registers (10 bits in total) are used as a RAM address. For $090 to $25F, a bank setting must be made in the bank register (V: $03F).

Direct Addressing Mode: A direct addressing instruction consists of two words. The first word contains the opcode, and the contents of the second word (10 bits) are used as a RAM address.

Memory Register Addressing Mode: The memory registers (MR), which are located in 16 addresses from $040 to $04F, are accessed with the LAMR and XMRA instructions.

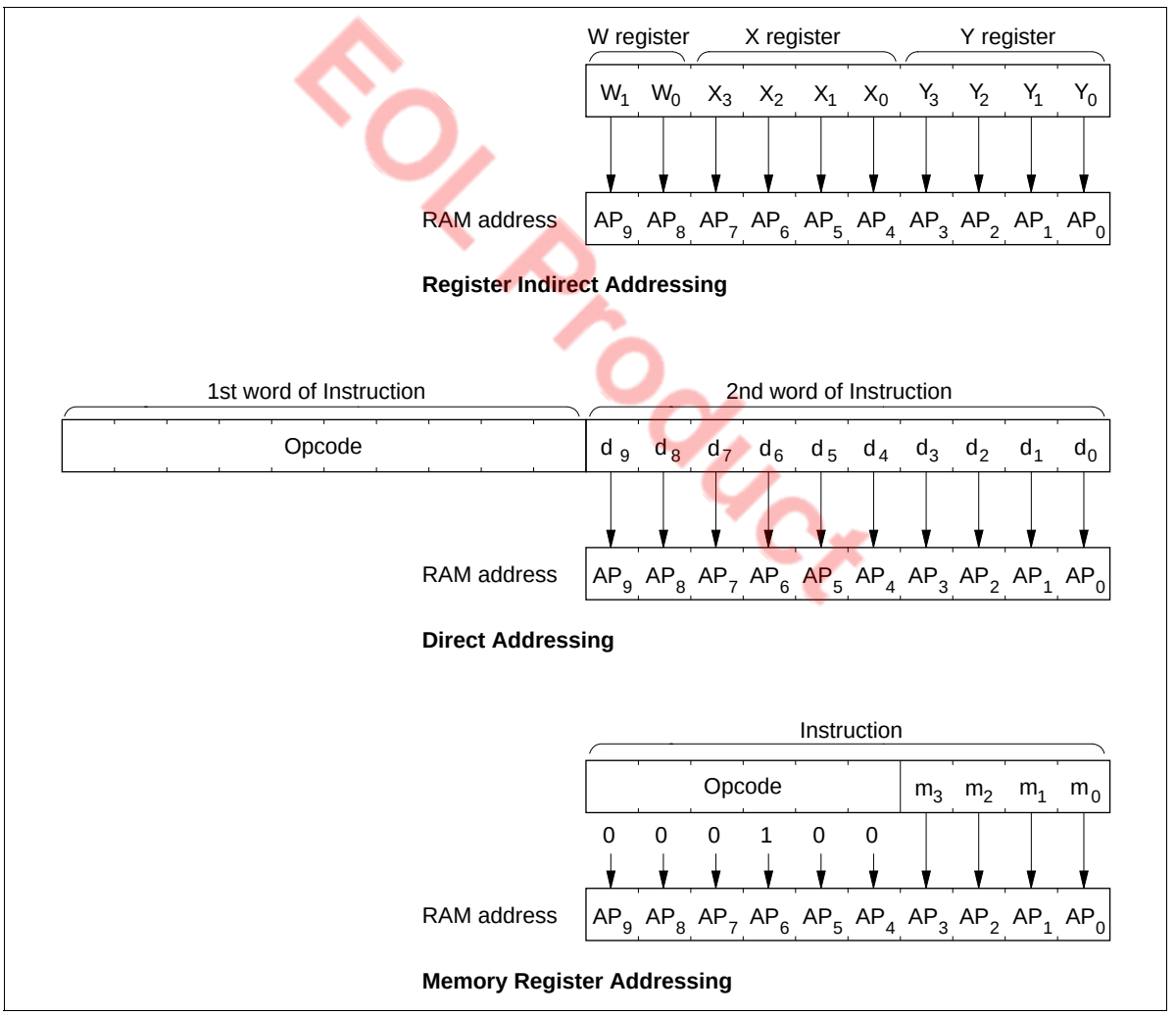

Figure 85 RAM Addressing Modes

EOL Product

ROM Addressing Modes and the P Instruction

The MCU has four ROM addressing modes, as shown in figure 86 and described below.

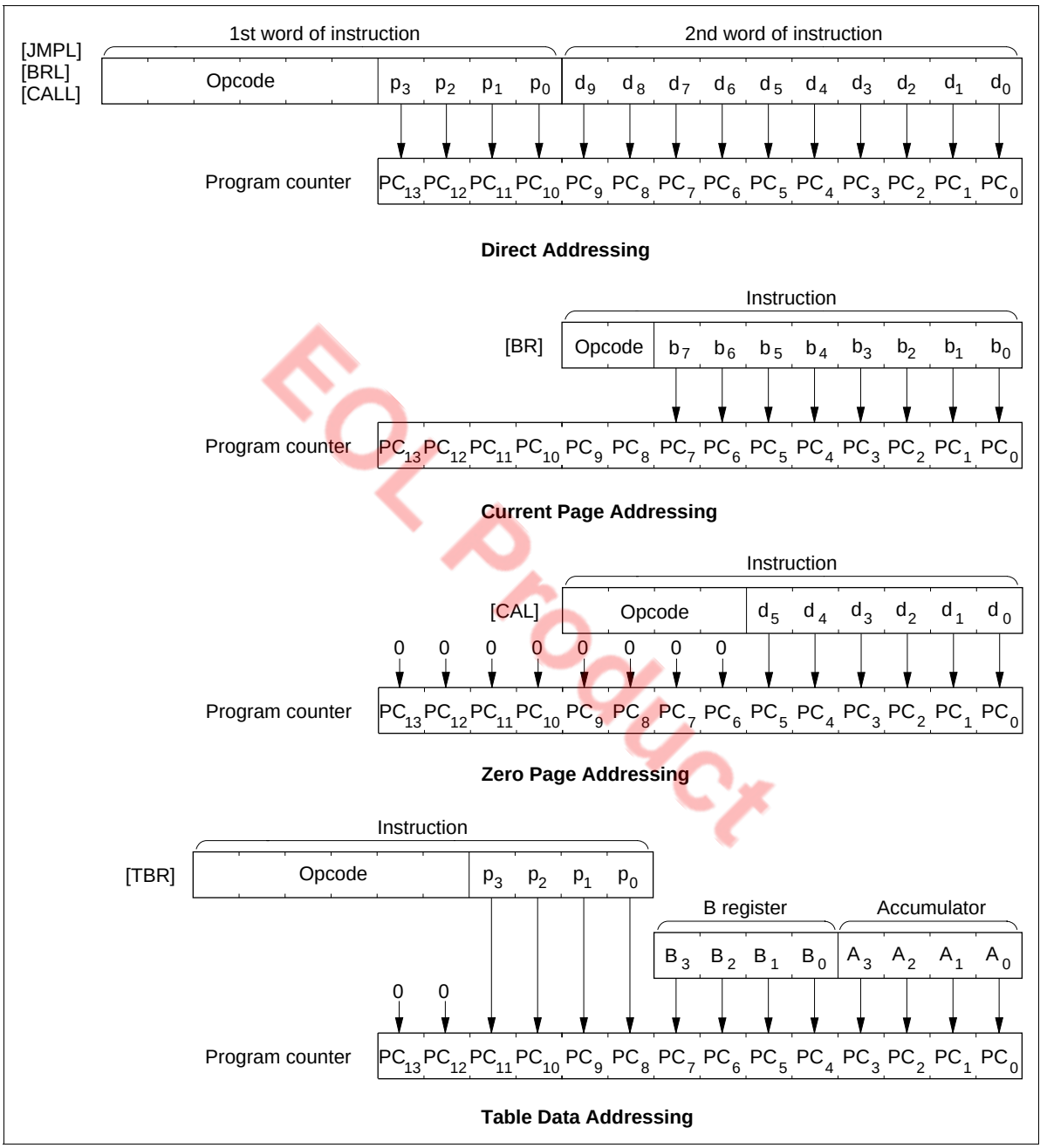

EOL Product

Figure 86 ROM Addressing Modes

Direct Addressing Mode: A program can branch to any address in the ROM memory space by executing the JMPL, BRL, or CALL instruction. Each of these instructions replaces the 14 program counter bits (PC_{13}–PC_0) with 14-bit immediate data.

Current Page Addressing Mode: The MCU has 64 pages of ROM with 256 words per page. A program can branch to any address in the current page by executing the BR instruction. This instruction replaces the eight low-order bits of the program counter (PC_7–PC_0) with eight-bit immediate data. A branch by a BR instruction located at a page boundary differs from other cases: see figure 88.

Zero-Page Addressing Mode: A program can branch to the zero-page subroutine area located at $0000–$003F by executing the CAL instruction. When the CAL instruction is executed, 6 bits of immediate data are placed in the six low-order bits of the program counter (PC_5–PC_0), and 0s are placed in the eight high-order bits (PC_{13}–PC_6).

Table Data Addressing Mode: A program can branch to an address determined by the contents of four-bit immediate data, the accumulator, and the B register by executing the TBR instruction.

P Instruction: ROM data addressed in table data addressing mode can be referenced with the P instruction as shown in figure 88. If bit 8 of the ROM data is 1, the lower eight bits of ROM data are written to the accumulator and the B register. If bit 9 is 1, the lower eight bits of ROM data are written to the R1 and R2 port output registers. If both bits 8 and 9 are 1, ROM data is written to the accumulator and the B register, and also to the R1 and R2 port output registers at the same time.

The P instruction has no effect on the program counter.

Branch destination of a BR instruction on a page boundary: When a BR instruction is on a page boundary (256n + 255), the program counter will advance to the next page because of the hardware architecture. Therefore, when using a BR instruction on a page boundary, the branch destination should be set in the next page (see figure 88).

HMCS400 Series cross assemblers are provided with an automatic paging function that automatically turns the ROM page, irrespective of the model.

EOL Product

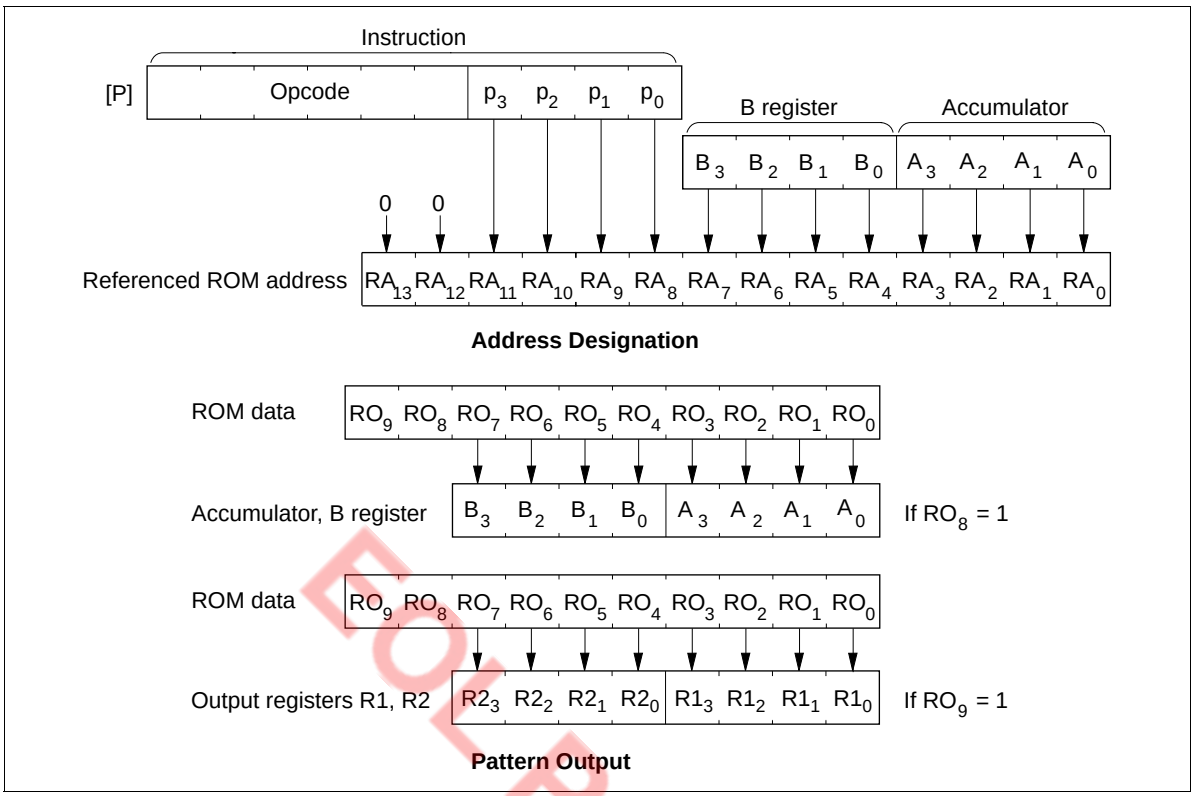

Figure 87 P Instruction

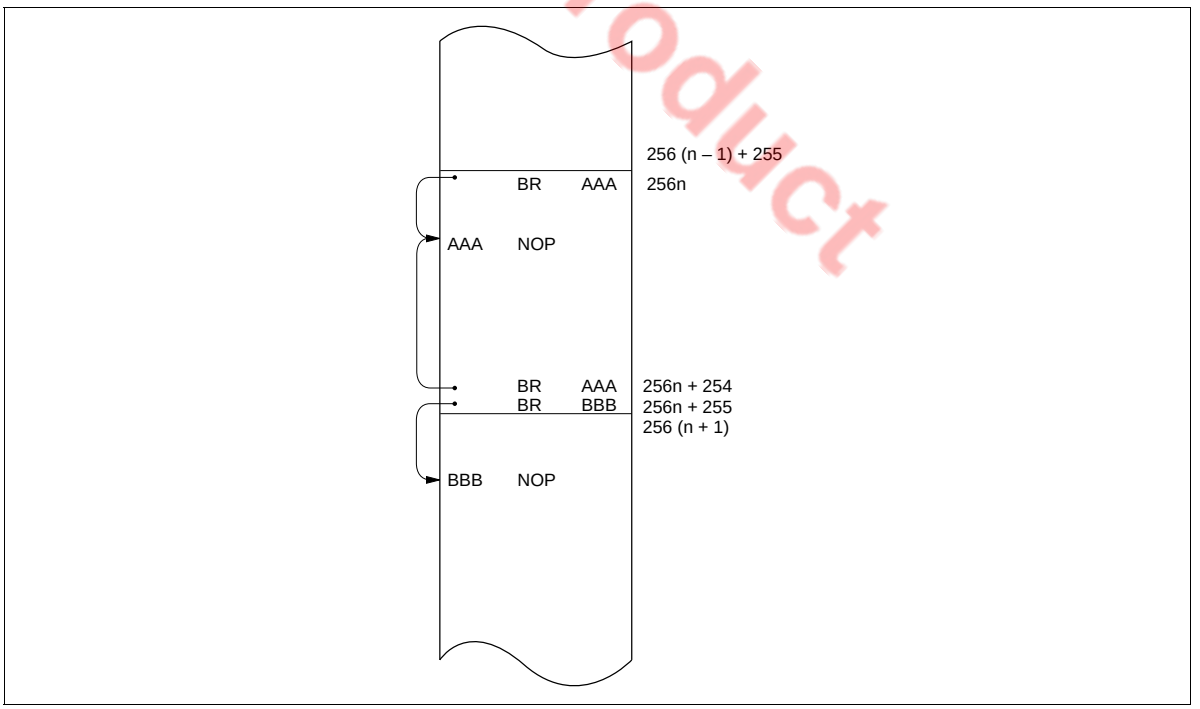

Figure 88 Branching when the Branch Destination is on a Page Boundary

EOL Product

Instruction Set

The MCU has 101 instructions, classified into the following 10 groups:

- Immediate instructions
- Register-to-register instructions
- RAM addressing instructions
- RAM register instructions
- Arithmetic instructions
- Compare instructions
- RAM bit manipulation instructions
- ROM addressing instructions
- Input/output instructions
- Control instructions

The functions of these instructions are listed in tables 25 to 34, and an opcode map is shown in table 35.

EOL Product

Table 25 Immediate Instructions

Operation	Mnemonic	Operation Code	Function	Status	Words/ Cycles
Load A from immediate	LAI i	1 0 0 0 1 1 i_3 i_2 i_1 i_0	i → A		1/1
Load B from immediate	LBI i	1 0 0 0 0 0 i_3 i_2 i_1 i_0	i → B		1/1
Load memory from immediate	LMID i,d	0 1 1 0 1 0 i_3 i_2 i_1 i_0 d_9 d_8 d_7 d_6 d_5 d_4 d_3 d_2 d_1 d_0	i → M		2/2
Load memory from immediate, increment Y	LMIIY i	1 0 1 0 0 1 i_3 i_2 i_1 i_0	i → M, Y + 1 → Y	NZ	1/1

Table 26 Register-Register Instructions

Operation	Mnemonic	Operation Code	Function	Status	Words/ Cycles
Load A from B	LAB	0 0 0 1 0 0 1 0 0 0	B → A		1/1
Load B from A	LBA	0 0 1 1 0 0 1 0 0 0	A → B		1/1
Load A from W	LAW	0 1 0 0 0 0 0 0 0 0 0 0 0 0 0 0 0 0 0 0	W → A		2/2*
Load A from Y	LAY	0 0 1 0 1 0 1 1 1 1	Y → A		1/1
Load A from SPX	LASPX	0 0 0 1 1 0 1 0 0 0	SPX → A		1/1
Load A from SPY	LASPY	0 0 0 1 0 1 1 0 0 0	SPY → A		1/1
Load A from MR	LAMR m	1 0 0 1 1 1 m_3 m_2 m_1 m_0	MR (m) → A		1/1
Exchange MR and A	XMRA m	1 0 1 1 1 1 m_3 m_2 m_1 m_0	MR (m) ↔ A		1/1

Note: * The assembler automatically provides an operand for the second word of the LAW instruction.

Table 27 RAM Address Instructions

Operation	Mnemonic	Operation Code	Function	Status	Words/ Cycles
Load W from immediate	LWI i	0 0 1 1 1 1 0 0 i_1 i_0	i → W		1/1
Load X from immediate	LXI i	1 0 0 0 1 0 i_3 i_2 i_1 i_0	i → X		1/1
Load Y from immediate	LYI i	1 0 0 0 0 1 i_3 i_2 i_1 i_0	i → Y		1/1
Load W from A	LWA	0 1 0 0 0 1 0 0 0 0 0 0 0 0 0 0 0 0 0 0	A → W		2/2*
Load X from A	LXA	0 0 1 1 1 0 1 0 0 0	A → X		1/1
Load Y from A	LYA	0 0 1 1 0 1 1 0 0 0	A → Y		1/1
Increment Y	IY	0 0 0 1 0 1 1 1 0 0	Y + 1 → Y	NZ	1/1
Decrement Y	DY	0 0 1 1 0 1 1 1 1 1	Y – 1 → Y	NB	1/1
Add A to Y	AYY	0 0 0 1 0 1 0 1 0 0	Y + A → Y	OVF	1/1
Subtract A from Y	SYY	0 0 1 1 0 1 0 1 0 0	Y – A → Y	NB	1/1
Exchange X and SPX	XSPX	0 0 0 0 0 0 0 0 0 1	X ↔ SPX		1/1
Exchange Y and SPY	XSPY	0 0 0 0 0 0 0 0 1 0	Y ↔ SPY		1/1
Exchange X and SPX, Y and SPY	XSPXY	0 0 0 0 0 0 0 0 1 1	X ↔ SPX,Y ↔ SPY		1/1

Note: * The assembler automatically provides an operand for the second word of the LWA instruction.

EOL Product

Table 28 RAM Register Instructions

Operation	Mnemonic	Operation Code	Function	Status	Words/ Cycles
Load A from memory	LAM(XY)	0 0 1 0 0 1 0 0 y x	M → A (X ↔ SPX, Y ↔ SPY)		1/1
Load A from memory	LAMD d	0 1 1 0 0 1 0 0 0 0 d_9 d_8 d_7 d_6 d_5 d_4 d_3 d_2 d_1 d_0	M → A		2/2
Load B from memory	LBM(XY)	0 0 0 1 0 0 0 0 y x	M → B (X ↔ SPX, Y ↔ SPY)		1/1
Load memory from A	LMA(XY)	0 0 1 0 0 1 0 1 y x	A → M (X ↔ SPX, Y ↔ SPY)		1/1
Load memory from A	LMAD d	0 1 1 0 0 1 0 1 0 0 d_9 d_8 d_7 d_6 d_5 d_4 d_3 d_2 d_1 d_0	A → M		2/2
Load memory from A, increment Y	LMAIY(X)	0 0 0 1 0 1 0 0 0 x	A → M, Y + 1 → Y (X ↔ SPX)	NZ	1/1
Load memory from A, decrement Y	LMADY(X)	0 0 1 1 0 1 0 0 0 x	A → M, Y – 1 → Y (X ↔ SPX)	NB	1/1
Exchange memory and A	XMA(XY)	0 0 1 0 0 0 0 0 y x	M ↔ A (X ↔ SPX, Y ↔ SPY)		1/1
Exchange memory and A	XMAD d	0 1 1 0 0 0 0 0 0 0 d_9 d_8 d_7 d_6 d_5 d_4 d_3 d_2 d_1 d_0	M ↔ A		2/2
Exchange memory and B	XMB(XY)	0 0 1 1 0 0 0 0 y x	M ↔ B (X ↔ SPX, Y ↔ SPY)		1/1

Note: The meanings of (XY) and (X) are as follows:

Each instruction marked with (XY) has 4 mnemonics, each with different object codes. For example, different values of x and y of the opcode of the LAM(XY) instruction are given below.

Mnemonic	y	x	Function
LAM	0	0	None
LAMX	0	1	X ↔ SPX
LAMY	1	0	Y ↔ SPY
LAMXY	1	1	X ↔ SPX, Y ↔ SPY

Each instruction marked with (X) has 2 mnemonics, each with different object codes. For example, different values of x of the opcode of the LMAIY(X) instruction are given below.

Mnemonic	x	Function
LMAIY	0	None
LMAIYX	1	X ↔ SPX

EOL Product

Table 29 Arithmetic Instructions

Operation	Mnemonic	Operation Code	Function	Status	Words/ Cycles
Add immediate to A	AI i	1 0 1 0 0 0 i_3 i_2 i_1 i_0	A + i → A	OVF	1/1
Increment B	IB	0 0 0 1 0 0 1 1 0 0	B + 1 → B	NZ	1/1
Decrement B	DB	0 0 1 1 0 0 1 1 1 1	B – 1 → B	NB	1/1
Decimal adjust for addition	DAA	0 0 1 0 1 0 0 1 1 0			1/1
Decimal adjust for subtraction	DAS	0 0 1 0 1 0 1 0 1 0			1/1
Negate A	NEGA	0 0 0 1 1 0 0 0 0 0	$\overline{A}$ + 1 → A		1/1
Complement B	COMB	0 1 0 1 0 0 0 0 0 0	$\overline{B}$ → B		1/1
Rotate right A with carry	ROTR	0 0 1 0 1 0 0 0 0 0			1/1
Rotate left A with carry	ROTL	0 0 1 0 1 0 0 0 0 1			1/1
Set carry	SEC	0 0 1 1 1 0 1 1 1 1	1 → CA		1/1
Reset carry	REC	0 0 1 1 1 0 1 1 0 0	0 → CA		1/1
Test carry	TC	0 0 0 1 1 0 1 1 1 1		CA	1/1
Add A to memory	AM	0 0 0 0 0 0 1 0 0 0	M + A → A	OVF	1/1
Add A to memory	AMD d	0 1 0 0 0 0 1 0 0 0 d_9 d_8 d_7 d_6 d_5 d_4 d_3 d_2 d_1 d_0	M + A → A	OVF	2/2
Add A to memory with carry	AMC	0 0 0 0 0 1 1 0 0 0	M + A + CA → A OVF → CA	OVF	1/1
Add A to memory with carry	AMCD d	0 1 0 0 0 1 1 0 0 0 d_9 d_8 d_7 d_6 d_5 d_4 d_3 d_2 d_1 d_0	M + A + CA → A OVF → CA	OVF	2/2
Subtract A from memory with carry	SMC	0 0 1 0 0 1 1 0 0 0	M – A – $\overline{CA}$ → A NB → CA	NB	1/1
Subtract A from memory with carry	SMCD d	0 1 1 0 0 1 1 0 0 0 d_9 d_8 d7 d_6 d_5 d_4 d_3 d_2 d_1 d_0	M – A – $\overline{CA}$ → A NB → CA	NB	2/2
OR A and B	OR	0 1 0 1 0 0 0 1 0 0	A ∪ B → A		1/1
AND memory with A	ANM	0 0 1 0 0 1 1 1 0 0	A ∩ M → A	NZ	1/1
AND memory with A	ANMD d	0 1 1 0 0 1 1 1 0 0 d_9 d_8 d_7 d_6 d_5 d_4 d_3 d_2 d_1 d_0	A ∩ M → A	NZ	2/2
OR memory with A	ORM	0 0 0 0 0 0 1 1 0 0	A ∪ M → A	NZ	1/1
OR memory with A	ORMD d	0 1 0 0 0 0 1 1 0 0 d_9 d_8 d_7 d_6 d_5 d_4 d_3 d_2 d_1 d_0	A ∪ M → A	NZ	2/2
EOR memory with A	EORM	0 0 0 0 0 1 1 1 0 0	A ⊕ M → A	NZ	1/1
EOR memory with A	EORMD d	0 1 0 0 0 1 1 1 0 0 d_9 d_8 d_7 d_6 d_5 d_4 d_3 d_2 d_1 d_0	A ⊕ M → A	NZ	2/2

EOL Product

Table 30 Compare Instructions

Operation	Mnemonic	Operation Code	Function	Status	Words/ Cycles
Immediate not equal to memory	INEM i	0 0 0 0 1 0 i_3 i_2 i_1 i_0	i ≠ M	NZ	1/1
Immediate not equal to memory	INEMD i,d	0 1 0 0 1 0 i_3 i_2 i_1 i_0 d_9 d_8 d_7 d_6 d_5 d_4 d_3 d_2 d_1 d_0	i ≠ M	NZ	2/2
A not equal to memory	ANEM	0 0 0 0 0 0 0 1 0 0	A ≠ M	NZ	1/1
A not equal to memory	ANEMD d	0 1 0 0 0 0 0 1 0 0 d_9 d_8 d_7 d_6 d_5 d_4 d_3 d_2 d_1 d_0	A ≠ M	NZ	2/2
B not equal to memory	BNEM	0 0 0 1 0 0 0 1 0 0	B ≠ M	NZ	1/1
Y not equal to immediate	YNEI i	0 0 0 1 1 1 i_3 i_2 i_1 i_0	Y ≠ i	NZ	1/1
Immediate less than or equal to memory	ILEM i	0 0 0 0 1 1 i_3 i_2 i_1 i_0	i ≤ M	NB	1/1
Immediate less than or equal to memory	ILEMD i,d	0 1 0 0 1 1 i_3 i_2 i_1 i_0 d_9 d_8 d_7 d_6 d_5 d_4 d_3 d_2 d_1 d_0	i ≤ M	NB	2/2
A less than or equal to memory	ALEM	0 0 0 0 0 1 0 1 0 0	A ≤ M	NB	1/1
A less than or equal to memory	ALEMD d	0 1 0 0 0 1 0 1 0 0 d_9 d_8 d_7 d_6 d_5 d_4 d_3 d_2 d_1 d_0	A ≤ M	NB	2/2
B less than or equal to memory	BLEM	0 0 1 1 0 0 0 1 0 0	B ≤ M	NB	1/1
A less than or equal to immediate	ALEI i	1 0 1 0 1 1 i_3 i_2 i_1 i_0	A ≤ i	NB	1/1

Table 31 RAM Bit Manipulation Instructions

Operation	Mnemonic	Operation Code	Function	Status	Words/ Cycles
Set memory bit	SEM n	0 0 1 0 0 0 0 1 n_1 n_0	1 → M (n)		1/1
Set memory bit	SEMD n,d	0 1 1 0 0 0 0 1 n_1 n_0 d_9 d_8 d_7 d_6 d_5 d_4 d_3 d_2 d_1 d_0	1 → M (n)		2/2
Reset memory bit	REM n	0 0 1 0 0 0 1 0 n_1 n_0	0 → M (n)		1/1
Reset memory bit	REMD n,d	0 1 1 0 0 0 1 0 n_1 n_0 d_9 d_8 d_7 d_6 d_5 d_4 d_3 d_2 d_1 d_0	0 → M (n)		2/2
Test memory bit	TM n	0 0 1 0 0 0 1 1 n_1 n_0		M (n)	1/1
Test memory bit	TM n,d	0 1 1 0 0 0 1 1 n_1 n_0 d_9 d_8 d_7 d_6 d_5 d_4 d_3 d_2 d_1 d_0		M (n)	2/2

EOL Product

Table 32 ROM Address Instructions

Operation	Mnemonic	Operation Code	Function	Status	Words/ Cycles
Branch on status 1	BR b	1 1 b_7 b_6 b_5 b_4 b_3 b_2 b_1 b_0		1	1/1
Long branch on status 1	BRL u	0 1 0 1 1 1 p_3 p_2 p_1 p_0 d_9 d_8 d_7 d_6 d_5 d_4 d_3 d_2 d_1 d_0		1	2/2
Long jump unconditionally	JMPL u	0 1 0 1 0 1 p_3 p_2 p_1 p_0 d_9 d_8 d_7 d_6 d_5 d_4 d_3 d_2 d_1 d_0			2/2
Subroutine jump on status 1	CAL a	0 1 1 1 a_5 a_4 a_3 a_2 a_1 a_0		1	1/2
Long subroutine jump on status 1	CALL u	0 1 0 1 1 0 p_3 p_2 p_1 p_0 d_9 d_8 d_7 d_6 d_5 d_4 d_3 d_2 d_1 d_0		1	2/2
Table branch	TBR p	0 0 1 0 1 1 p_3 p_2 p_1 p_0		1	1/1
Return from subroutine	RTN	0 0 0 0 0 1 0 0 0 0			1/3
Return from interrupt	RTNI	0 0 0 0 0 1 0 0 0 1	1 → IE, carry restored	ST	1/3

Table 33 Input/Output Instructions

Operation	Mnemonic	Operation Code	Function	Status	Words/ Cycles
Set discrete I/O latch	SED	0 0 1 1 1 0 0 1 0 0	1 → D (Y)		1/1
Set discrete I/O latch direct	SEDD m	1 0 1 1 1 0 m_3 m_2 m_1 m_0	1 → D (m)		1/1
Reset discrete I/O latch	RED	0 0 0 1 1 0 0 1 0 0	0 → D (Y)		1/1
Reset discrete I/O latch direct	REDD m	1 0 0 1 1 0 m_3 m_2 m_1 m_0	0 → D (m)		1/1
Test discrete I/O latch	TD	0 0 1 1 1 0 0 0 0 0		D (Y)	1/1
Test discrete I/O latch direct	TDD m	1 0 1 0 1 0 m_3 m_2 m_1 m_0		D (m)	1/1
Load A from R-port register	LAR m	1 0 0 1 0 1 m_3 m_2 m_1 m_0	R (m) → A		1/1
Load B from R-port register	LBR m	1 0 0 1 0 0 m_3 m_2 m_1 m_0	R (m) → B		1/1
Load R-port register from A	LRA m	1 0 1 1 0 1 m_3 m_2 m_1 m_0	A → R (m)		1/1
Load R-port register from B	LRB m	1 0 1 1 0 0 m_3 m_2 m_1 m_0	B → R (m)		1/1
Pattern generation	P p	0 1 1 0 1 1 p_3 p_2 p_1 p_0			1/2

EOL Product

Table 34 Control Instructions

Operation	Mnemonic	Operation Code	Function	Status	Words/ Cycles
No operation	NOP	0 0 0 0 0 0 0 0 0 0			1/1
Start serial	STS	0 1 0 1 0 0 1 0 0 0			1/1
Standby mode/watch mode*	SBY	0 1 0 1 0 0 1 1 0 0			1/1
Stop mode/watch mode	STOP	0 1 0 1 0 0 1 1 0 1			1/1

Note: * Only after a transition from subactive mode.

EOL Product

Table 35 Opcode Map

R9	H \ L	R8 = 0															
		0	1	2	3	4	5	6	7	8	9	A	B	C	D	E	F
0	0	NOP	XSPX	XSPY	XSPXY	ANEM				AM				ORM			
	1	RTN	RTNI			ALEM				AMC				EORM			
	2	INEM i(4)															
	3	ILEM i(4)															
	4	LBM(XY)				BNEM				LAB				IB			
	5	LMAIY(X)				AYY				LASPY				IY			
	6	NEGA				RED				LASPX							TC
	7	YNEI i(4)															
	8	XMA(XY)				SEM n(2)				REM n(2)				TM n(2)			
	9	LAM(XY)				LMA(XY)				SMC				ANM			
	A	ROTR	ROTL					DAA				DAS					LAY
	B	TBR p(4)															
	C	XMB(XY)				BLEM				LBA							DB
	D	LMADY(X)				SYY				LYA							DY
	E	TD				SED				LXA				REC			SEC
	F	LWI i(2)															
1	0	LBI i(4)															
	1	LYI i(4)															
	2	LXI i(4)															
	3	LAI i(4)															
	4	LBR m(4)															
	5	LAR m(4)															
	6	REDD m(4)															
	7	LAMR m(4)															
	8	AI i(4)															
	9	LMIIY i(4)															
	A	TDD m(4)															
	B	ALEI i(4)															
	C	LRB m(4)															
	D	LRA m(4)															
	E	SEDD m(4)															
	F	XMRA m(4)															

1-word/2-cycle instruction

1-word/3-cycle instruction

RAM direct address instruction (2-word/2-cycle)

2-word/2-cycle instruction

EOL Product

R9	H \ L \ R8	0	1	2	3	4	5	6	7	8	9	A	B	C	D	E	F
		1															
0	0	LAW				ANEMD				AMD				ORMD			
	1	LWA				ALEMD				AMCD				EORMD			
	2	INEMD i(4)															
	3	ILEMD i(4)															
	4	COMB				OR				STS				SBY	STOP		
	5	JMPL p(4)															
	6	CALL p(4)															
	7	BRL p(4)															
	8	XMAD				SEMD n(2)				REMD n(2)				TMD n(2)			
	9	LAMD				LMAD				SMCD				ANMD			
	A	LMID i(4)															
	B	P p(4)															
	C	CAL a(6)															
	D																
	E																
	F																
1	0	BR b(8)															
	1																
	2																
	3																
	4																
	5																
	6																
	7																
	8																
	9																
	A																
	B																
	C																
	D																
	E																
	F																

EOL Product

1-word/2-cycle instruction

1-word/3-cycle instruction

RAM direct address instruction (2-word/2-cycle)

2-word/2-cycle instruction

Absolute Maximum Ratings

Item	Symbol	Value	Unit	Notes
Supply voltage	V_{CC}	–0.3 to +7.0	V	
Programming voltage	V_{PP}	–0.3 to +14.0	V	1
Pin voltage	V_T	–0.3 to (V_{CC} + 0.3)	V	
Total permissible input current (to chip)	ΣI_o	100	mA	2
Total permissible output current (from chip)	$-\Sigma I_o$	50	mA	3
Maximum input current (to chip)	I_o	4	mA	4, 5
		30	mA	4, 6
Maximum output current (from chip)	$-I_o$	4	mA	7, 8
		20	mA	7, 9
Operating temperature	T_{opr}	–20 to +75	°C	10
Storage temperature	T_{stg}	–55 to +125	°C	11

Notes:
1. Applies to D_{13} (V_{PP}) of the HD407A4669.
2. The total permissible input current is the total of input currents simultaneously flowing in from all the I/O pins to ground.
3. The total permissible output current is the total of output currents simultaneously flowing out from V_{CC} to all I/O pins.
4. The maximum input current is the maximum current flowing from each I/O pin to ground.
5. Applies to D_0–D_3, R0–R4 and R6–RA.
6. Applies to D_4, D_5 and D_9–D_{11}
7. The maximum output current is the maximum current flowing out from V_{CC} to each I/O pin.
8. Applies to D_4, D_5, D_9–D_{11}, R0–R4 and R6–RA.
9. Applies to D_0–D_3.
10. The operating temperature indicates the temperature range in which power can be supplied to the LSI (voltage V_{CC} shown in the electrical characteristics tables can be applied).
11. In the case of chips, the storage specification differs from that of the package products. Please consult your Hitachi sales representative for details.

Permanent damage may occur if these absolute maximum ratings are exceeded. Normal operation must be under the conditions stated in the electrical characteristics tables. If these conditions are exceeded, the LSI may malfunction or its reliability may be affected.

EOL Product

Electrical Characteristics

DC Characteristics (HD404668, HD4046612, HD404669, HD40A4668, HD40A46612, HD40A4669: V_{CC} = 1.8 to 5.5 V, GND = 0 V, T_a = –20°C to +75°C; HCD404669: V_{CC} = 1.8 to 5.5 V, GND = 0 V, T_a = +75°C; HD407A4669: V_{CC} = 2.2 to 5.5 V, GND = 0 V, T_a = –20°C to +75°C, unless otherwise specified)

Item	Symbol	Pin(s)	Min	Typ	Max	Unit	Test Condition	Notes
Input high voltage	V_{IH}	RESET, $\overline{SCK_1}$, SI_1, $\overline{INT_0}$, $\overline{INT_1}$, INT_2, INT_3, INT_4, $\overline{STOPC}$, EVND	$0.9V_{CC}$	—	V_{CC} + 0.3	V	—	
		OSC_1	V_{CC} – 0.3	—	V_{CC} + 0.3	V	External clock operation	
Input low voltage	V_{IL}	RESET, $\overline{SCK_1}$, SI_1, $\overline{INT_0}$, $\overline{INT_1}$, INT_2, INT_3, INT_4, $\overline{STOPC}$, EVND	–0.3	—	$0.10V_{CC}$	V	—	
		OSC_1	–0.3	—	0.3	V	External clock operation	
Output high voltage	V_{OH}	$\overline{SCK_1}$, SO_1, TOC, TOD	V_{CC} – 0.5	—	—	V	$–I_{OH}$ = 0.3 mA	
Output low voltage	V_{OL}	$\overline{SCK_1}$, SO_1, TOC, TOD	—	—	0.4	V	I_{OL} = 0.4 mA	
I/O leakage current	$\lvert I_{IL} \rvert$	RESET, $\overline{SCK_1}$, SI_1, $\overline{INT_0}$, $\overline{INT_1}$, INT_2, INT_3, INT_4, $\overline{STOPC}$, EVND, OSC_1, SO_1, TOC, TOD	—	—	1.0	µA	V_{in} = 0 V to V_{CC}	1
Active mode current dissipation (digital input mode)	I_{CC1}	V_{CC}	—	2.5	5.0	mA	V_{CC} = 5.0 V, f_{OSC} = 4 MHz	2
	I_{CC2}	V_{CC}	—	0.3	1.0	mA	V_{CC} = 3.0 V, f_{OSC} = 800 kHz	2
	I_{CC3}	V_{CC}	—	5.0	9.0	mA	HD40A4668, HD40A46612, HD40A4669, HD407A4669: V_{CC} = 5 V, f_{OSC} = 8 MHz	2

EOL Product

Item	Symbol	Pin(s)	Min	Typ	Max	Unit	Test Condition	Notes
Active mode current dissipation (analog compare mode)	I_{CMP1}	V_{CC}	—	6.5	9.0	mA	V_{CC} = 5V, f_{OSC} = 4MHz	3
	I_{CMP2}	V_{CC}	—	2.8	3.5	mA	V_{CC} = 3V, f_{OSC} = 800kHz	3
	I_{CMP3}	V_{CC}	—	9.0	13.0	mA	HD40A4668, HD40A46612, HD40A4669, HD407A4669: V_{CC} = 5V, f_{OSC} = 8MHz	3
Standby mode current dissipation	I_{SBY1}	V_{CC}	—	1.0	2.0	mA	V_{CC} = 5V, f_{OSC} = 4MHz	4
	I_{SBY2}	V_{CC}	—	0.1	0.3	mA	V_{CC} = 3V, f_{OSC} = 800kHz	4
	I_{SBY3}	V_{CC}	—	2.0	4.0	mA	HD40A4668, HD40A46612, HD40A4669, HD407A4669: V_{CC} = 5V, f_{OSC} = 8MHz	4
Subactive mode current dissipation	I_{SUB}	V_{CC}	—	18	35	µA	V_{CC} = 3 V, 32 kHz oscillator used	5
Watch mode current dissipation	I_{WTC}	V_{CC}	—	4	7.5	µA	V_{CC} = 3 V, 32 kHz oscillator used	5
Stop mode current dissipation	I_{STOP}	V_{CC}	—	0.5	5	µA	V_{CC} = 3 V, no 32 kHz oscillator	5
Stop mode retention voltage	V_{STOP}	V_{CC}	1.5	—	—	V	No 32 kHz oscillator	6
Comparator input reference voltage range	VC_{ref}	VC_{ref}	0	—	V_{CC}—1.2	V		

EOL Product

Notes: 1. Output buffer current is excluded.

2. Power supply current when the MCU is in the reset state and there are no I/O currents.

Test conditions: MCU: Reset

Pins: RESET at V_{CC} (V_{CC} – 0.3 V to V_{CC})

$\overline{TEST}$ at V_{CC} (V_{CC} – 0.3 V to V_{CC})

3. Power supply current when pins RD_0 and RD_1 are in analog input mode and there are no I/O currents.

Test conditions: MCU: DTMF not operating

Pins:
- $RD_0/COMP_0$: At GND (0 V to 0.3 V)
- $RD_1/COMP_1$: At GND (0 V to 0.3 V)
- RE_0/VC_{ref}: At GND (0 V to 0.3 V)

4. Power supply current when the on-chip timers are operating and there are no I/O currents.

Test conditions:	MCU:	I/O reset
		Serial interface stopped
		DTMF not operating
		Standby mode
	Pins:	RESET at GND (0 V to 0.3 V)
		$\overline{TEST}$ at V_{CC} (V_{CC} – 0.3 V to V_{CC})

5. These are the source currents when no I/O current is flowing.

Test conditions:	Pins:	RESET at GND (0 V to 0.3 V)
		$\overline{TEST}$ at V_{CC} (V_{CC} – 0.3 V to V_{CC})
		D_{13} at V_{CC} (V_{CC} – 0.3 V to V_{CC}) for the HD407A4669

6. The required voltage for RAM data retention.

EOL Product

I/O Characteristics for Standard Pins (HD404668, HD4046612, HD404669, HD40A4668, HD40A46612, HD40A4669: V_{CC} = 1.8 to 5.5 V, GND = 0 V, T_a = –20°C to +75°C; HCD404669: V_{CC} = 1.8 to 5.5 V, GND = 0 V, T_a = +75°C; HD407A4669: V_{CC} = 2.2 to 5.5 V, GND = 0 V, T_a = –20°C to +75°C, unless otherwise specified)

Item	Symbol	Pin(s)	Min	Typ	Max	Unit	Test Condition	Notes
Input high voltage	V_{IH}	D_{12}, D_{13}, R0 to R4, R6 to RA, RD, RE_0	$0.7V_{CC}$	—	V_{CC} + 0.3	V	—	
Input low voltage	V_{IL}	D_{12}, D_{13}, R0 to R4, R6 to RA, RD, RE_0	–0.3	—	$0.3V_{CC}$	V	—	
Output high voltage	V_{OH}	R0 to R4, R6 to RA	V_{CC} – 0.5	—	—	V	$–I_{OH}$ = 0.3 mA	
Output low voltage	V_{OL}	R0 to R4, R6 to RA	—	—	0.4	V	I_{OL} = 0.4 mA	
I/O leakage current	$\lvert I_{IL} \rvert$	D_{12}, R0 to R4, R6 to RA, RD, RE_0	—	—	1	µA	V_{in} = 0 V to V_{CC}	1
		D_{13}	—	—	1	µA	HD404668, HD4046612, HD404669, HCD404669, HD40A4668, HD40A46612, HD40A4669: V_{in} = 0V to V_{CC}	1
			—	—	1	µA	HD407A4669: V_{in} = V_{CC} – 0.3V to V_{CC}	1
			—	—	20	µA	HD407A4669: V_{in} = 0V to 0.3V	1
Pull-up MOS current	$–I_{PU}$	R0 to R4, R6 to RA	10	50	150	µA	V_{CC} = 3.0 V, V_{in} = 0 V	
Input high voltage	V_{IHA}	$COMP_0$, $COMP_1$	VC_{ref} +0.1	—	—	V	Analog compare mode	
Input low voltage	V_{ILA}	$COMP_0$, $COMP_1$	—	—	VC_{ref} – 0.1	V	Analog compare mode	

Note: 1. Output buffer current is excluded.

EOL Product

I/O Characteristics for High-Current (HD404668, HD4046612, HD404669, HD40A4668, HD40A46612, HD40A4669: V_{CC} = 1.8 to 5.5 V, GND = 0 V, T_a = –20°C to +75°C; HCD404669: V_{CC} = 1.8 to 5.5 V, GND = 0 V, T_a = +75°C; HD407A4669: V_{CC} = 2.2 to 5.5 V, GND = 0 V, T_a = –20°C to +75°C, unless otherwise specified)

Item	Symbol	Pin(s)	Min	Typ	Max	Unit	Test Condition	Notes
Input high voltage	V_{IH}	D_0 to D_5, D_9 to D_{11}	$0.7V_{CC}$	—	V_{CC} + 0.3	V	—	
Input low voltage	V_{IL}	D_0 to D_5, D_9 to D_{11}	–0.3	—	$0.3V_{CC}$	V	—	
Output high voltage	V_{OH}	D_0 to D_5, D_9 to D_{11}	V_{CC} – 0.5	—	—	V	$-I_{OH}$ = 0.3 mA	
		D_0 to D_3	V_{CC} – 2.0	—	—	V	$-I_{OH}$ = 10 mA V_{CC} = 4.5V to 5.5V	
Output low voltage	V_{OL}	D_0 to D_5, D_9 to D_{11}	—	—	0.4	V	I_{OL} = 0.4 mA	
		D_4, D_5, D_9 to D_{11}	—	—	2.0	V	I_{OL} = 15 mA, V_{CC} = 4.5 V to 5.5 V	
I/O leakage current	$\lvert I_{IL} \rvert$	D_0 to D_5, D_9 to D_{11}	—	—	1	µA	V_{in} = 0 V to V_{CC}	1
Pull-up MOS current	$-I_{PU}$	D_4, D_5, D_9 to D_{11}	10	50	150	µA	V_{CC} = 3 V, V_{in} = 0 V	
Pull-down MOS current	I_{PD}	D_0 to D_3	10	50	150	µA	V_{CC} = 3 V, V_{in} = 3 V	

Note: 1. Output buffer current is excluded.

EOL Product

DTMF Characteristics (HD404668, HD4046612, HD404669, HD40A4668, HD40A46612, HD40A4669: V_{CC} = 1.8 to 5.5 V, GND = 0 V, T_a = –20°C to +75°C; HCD404669: V_{CC} = 1.8 to 5.5 V, GND = 0 V, T_a = +75°C; HD407A4669: V_{CC} = 2.2 to 5.5 V, GND = 0 V, T_a = –20°C to +75°C, unless otherwise specified)

Item	Symbol	Pin	Min	Typ	Max	Unit	Test Condition	Notes
Tone output voltage (1)	V_{OR}	TONER	500	660	—	mV_{rms}	VT_{ref} – GND = 2.0 V, R_L = 100 kΩ, V_{CC} = 2.2 to 5.0V	1
Tone output voltage (2)	V_{OC}	TONEC	520	690	—	mV_{rms}	VT_{ref} – GND = 2.0 V, R_L = 100 kΩ, V_{CC} = 2.2 to 5.0V	1
Tone output distortion	%DIS	—	—	3	7	%	Short circuit between TONER and TONEC, R_L = 100 kΩ	2
Tone output ratio	dB_{CR}	—	—	2.5	—	dB	Short circuit between TONER and TONEC, R_L = 100 kΩ	2

Notes: These characteristics are guaranteed with an operating frequency, f_{OSC}, of 400 kHz, 800 kHz, 2 MHz, 3.58 MHz, 4 MHz, 7.16 MHz, or 8 MHz.

1. See figure 89.
2. See figure 90.

EOL Product

AC Characteristics (HD404668, HD4046612, HD404669, HD40A4668, HD40A46612, HD40A4669: V_{CC} = 1.8 to 5.5 V, GND = 0 V, T_a = –20°C to +75°C; HCD404669: V_{CC} = 1.8 to 5.5 V, GND = 0 V, T_a = +75°C; HD407A4669: V_{CC} = 2.2 to 5.5 V, GND = 0 V, T_a = –20°C to +75°C, unless otherwise specified)

Item	Symbol	Pin(s)	Min	Typ	Max	Unit	Test Condition	Notes
Clock oscillation frequency	f_{OSC}	OSC_1, OSC_2	—	400	—	kHz		1
			—	800	—	kHz		1
			—	2	—	MHz		1
			—	3.58	—	MHz		1
			—	4	—	MHz		1
			—	7.16	—	MHz	HD40A4668, HD40A46612, HD40A4669, HD407A4669: V_{CC} = 4.0V to 5.5V	1
			—	8	—	MHz		
		X1, X2	—	32.768	—	kHz		
Instruction cycle time	t_{cyc}	—	—	8	—	µs	f_{OSC} = 4 MHz, division by 32	2
			—	4	—	µs	f_{OSC} = 4 MHz, division by 16	2
			—	2	—	µs	f_{OSC} = 4 MHz, division by 8	2
			—	1	—	µs	f_{OSC} = 4 MHz, division by 4	2
	t_{subcyc}	—	—	244.14	—	µs	32 kHz oscillator used, division by 8	3
			—	122.07	—	µs	32 kHz oscillator used, division by 4	3
Oscillation stabilization time (ceramic oscillator)	t_{RC}	OSC_1, OSC_2	—	—	7.5	ms		4, 5
Oscillation stabilization time (crystal oscillator)	t_{RC}	OSC_1, OSC_2	—	—	30	ms		4, 5, 12
		X1, X2	—	—	2	s	T_a = –10°C to +60°C	4
External clock high width	t_{CPH}	OSC_1	1100	—	—	ns	f_{OSC} = 400 kHz	6
			550	—	—	ns	f_{OSC} = 800 kHz	
			215	—	—	ns	f_{OSC} = 2 MHz	
			115	—	—	ns	f_{OSC} = 3.58 MHz	
			105	—	—	ns	f_{OSC} = 4 MHz	
			57.5	—	—	ns	f_{OSC} = 7.16 MHz	6, 11
			52.5	—	—	ns	f_{OSC} = 8 MHz	

EOL Product

Item	Symbol	Pin(s)	Min	Typ	Max	Unit	Test Condition	Notes
External clock low width	t_{CPL}	OSC_1	1100	—	—	ns	f_{OSC} = 400 kHz	6
			550	—	—	ns	f_{OSC} = 800 kHz	
			215	—	—	ns	f_{OSC} = 2 MHz	
			115	—	—	ns	f_{OSC} = 3.58 MHz	
			105	—	—	ns	f_{OSC} = 4 MHz	
			57.5	—	—	ns	f_{OSC} = 7.16 MHz	6, 11
			52.5	—	—	ns	f_{OSC} = 8 MHz	
External clock rise time	t_{CPr}	OSC_1	—	—	150	ns	f_{OSC} = 400 kHz	6
			—	—	75	ns	f_{OSC} = 800 kHz	
			—	—	35	ns	f_{OSC} = 2 MHz	
			—	—	25	ns	f_{OSC} = 3.58 MHz	
			—	—	20	ns	f_{OSC} = 4 MHz	
			—	—	12.5	ns	f_{OSC} = 7.16 MHz	6, 11
			—	—	10	ns	f_{OSC} = 8 MHz	
External clock fall time	t_{CPf}	OSC_1	—	—	150	ns	f_{OSC} = 400 kHz	6
			—	—	75	ns	f_{OSC} = 800 kHz	
			—	—	35	ns	f_{OSC} = 2 MHz	
			—	—	25	ns	f_{OSC} = 3.58 MHz	
			—	—	20	ns	f_{OSC} = 4 MHz	
			—	—	12.5	ns	f_{OSC} = 7.16 MHz	6, 11
			—	—	10	ns	f_{OSC} = 8 MHz	
$\overline{INT}_0$–INT_4, EVND high widths	t_{IH}	$\overline{INT}_0$ to INT_4, EVND	2	—	—	t_{cyc}/ t_{subcyc}	—	7
$\overline{INT}_0$–INT_4, EVND low widths	t_{IL}	$\overline{INT}_0$ to INT_4, EVND	2	—	—	t_{cyc}/ t_{subcyc}	—	7
RESET high width	t_{RSTH}	RESET	2	—	—	t_{cyc}	—	8
$\overline{STOPC}$ low width	t_{STPL}	$\overline{STOPC}$	1	—	—	t_{RC}	—	9
RESET fall time	t_{RSTf}	RESET	—	—	20	ms	—	8
$\overline{STOPC}$ rise time	t_{STPr}	$\overline{STOPC}$	—	—	20	ms	—	9
Input capacitance	C_{in}	All pins except D_{13}	—	—	15	pF	f = 1 MHz V_{in} = 0 V,	
		D_{13}	—	—	15	pF	HD40A4668, HD40A46612, HD40A4669, HCD404669, HD404668, HD4046612, HD404669: f = 1MHz, V_{in} = 0V	
			—	—	40	pF	HD407A4669: f = 1MHz, V_{in} = 0V	

EOL Product

Item	Symbol	Pin(s)	Min	Typ	Max	Unit	Test Condition	Notes
Analog comparator stabilization time	t_{CSTB}	$COMP_0$ to $COMP_1$	—	—	2	t_{cyc}	V_{CC} = 2.2 V to 5.5V	10
			—	—	10	t_{cyc}	V_{CC} = 1.8 V to less than 2.2V	

Notes:
1. Set bits 0 and 1 (SSR10, SSR11) of system clock select register 1 (SSR1: $029) and bits 2 and 3 (SSR22, SSR23) of system clock select register 2 (SSR2: $02A) according to the system clock frequency used.
2. Set bits 0 and 1 (SSR20, SSR21) of system clock select register 2 (SSR2: $02A) according to the system clock frequency division ratio used.
3. Set bit 2 (SSR12) of system clock select register 1 (SSR1: $029) according to the subsystem clock frequency division ratio used.
4. The oscillation stabilization time is defined as follows:

   (1) The time required for the oscillation to settle after V_{CC} has reached the minimum specification value at power-on.

   (2) The time required for the oscillation to settle after RESET input has gone high when stop mode is cleared.

   (3) The time required for the oscillation to settle after $\overline{STOPC}$ input has gone low when stop mode is cleared.

   To ensure enough time for the oscillation to settle at power-on or when stop mode is cleared, input the RESET or $\overline{STOPC}$ signal for at least time t_{RC}. The oscillation stabilization time will depend on the circuit constants and stray capacitance. The oscillator should be determined in consultation with the oscillator manufacturer.
5. Set bits 0 and 1 (MIS0, MIS1) in the miscellaneous register (MIS: $00C) according to the oscillation stabilization time of the system oscillator.
6. See figure 91.
7. See figure 92.

   Unit t_{cyc} applies when the MCU is in standby mode or active mode.

   Unit t_{subcyc} applies when the MCU is in watch mode or subactive mode.
8. See figure 93.
9. See figure 94.
10. This is the time required for the analog comparator to settle, ensuring that the correct data is read, after pins RD_0 /$COMP_0$ and RD_1/$COMP_1$ are set to analog input mode.
11. Applies to the HD40A4668, HD40A46612, HD40A4669, and HD407A4669. The test condition is V_{CC} = 4.0 to 5.5 V.
12. Applies to the HD404668, HD4046612, HD404669, HCD404669, HD40A4668, HD40A46612, and HD40A4669. The test condition is V_{CC} = 2.0 to 5.5 V.

EOL Product

Serial Interface Timing Characteristics (HD404668, HD4046612, HD404669, HD40A4668, HD40A46612, HD40A4669: V_{CC} = 1.8 to 5.5 V, GND = 0 V, T_a = –20°C to +75°C; HCD404669: V_{CC} = 1.8 to 5.5 V, GND = 0 V, T_a = +75°C; HD407A4669: V_{CC} = 2.2 to 5.5 V, GND = 0 V, T_a = –20°C to +75°C, unless otherwise specified)

During Transmit Clock Output

Item	Symbol	Pin	Min	Typ	Max	Unit	Test Condition	Notes
Transmit clock cycle time	t_{Scyc}	$\overline{SCK}_1$	1.0	—	—	t_{cyc}	Load shown in figure 96	1
Transmit clock high width	t_{SCKH}	$\overline{SCK}_1$	0.4	—	—	t_{Scyc}	Load shown in figure 96	1
Transmit clock low width	t_{SCKL}	$\overline{SCK}_1$	0.4	—	—	t_{Scyc}	Load shown in figure 96	1
Transmit clock rise time	t_{SCKr}	$\overline{SCK}_1$	—	—	100	ns	Load shown in figure 96	1
Transmit clock fall time	t_{SCKf}	$\overline{SCK}_1$	—	—	100	ns	Load shown in figure 96	1
Serial output data delay time	t_{DSO}	SO_1	—	—	300	ns	Load shown in figure 96	1
Serial input data setup time	t_{SSI}	SI_1	200	—	—	ns	—	1
Serial input data hold time	t_{HSI}	SI_1	200	—	—	ns	—	1

Note: 1. Refer to figure 95.

EOL Product

During Transmit Clock Input

Item	Symbol	Pin	Min	Typ	Max	Unit	Test Condition	Notes
Transmit clock cycle time	t_{Scyc}	$\overline{SCK}_1$	1.0	—	—	t_{cyc}	—	1
Transmit clock high width	t_{SCKH}	$\overline{SCK}_1$	0.4	—	—	t_{Scyc}	—	1
Transmit clock low width	t_{SCKL}	$\overline{SCK}_1$	0.4	—	—	t_{Scyc}	—	1
Transmit clock rise time	t_{SCKr}	$\overline{SCK}_1$	—	—	100	ns	—	1
Transmit clock fall time	t_{SCKf}	$\overline{SCK}_1$	—	—	100	ns	—	1
Serial output data delay time	t_{DSO}	SO_1	—	—	300	ns	Load shown in figure 96	1
Serial input data setup time	t_{SSI}	SI_1	200	—	—	ns	—	1
Serial input data hold time	t_{HSI}	SI_1	200	—	—	ns	—	1

Note: 1. Refer to figure 95.

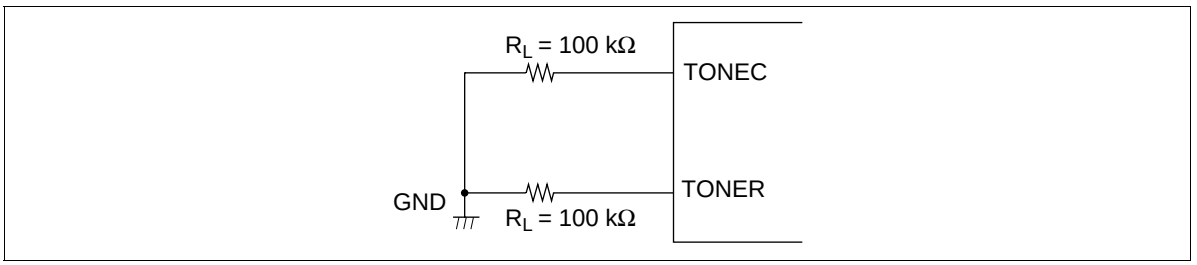

Figure 89 Tone Output Load Circuit

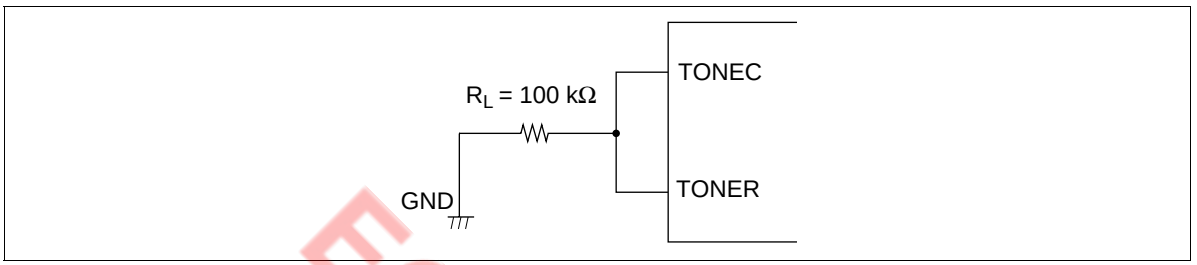

Figure 90 Distortion and dB_{CR} Load Circuit

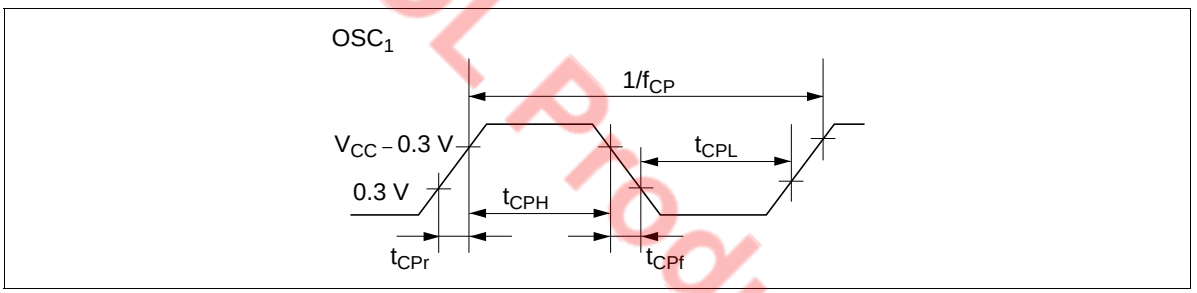

Figure 91 External Clock Timing

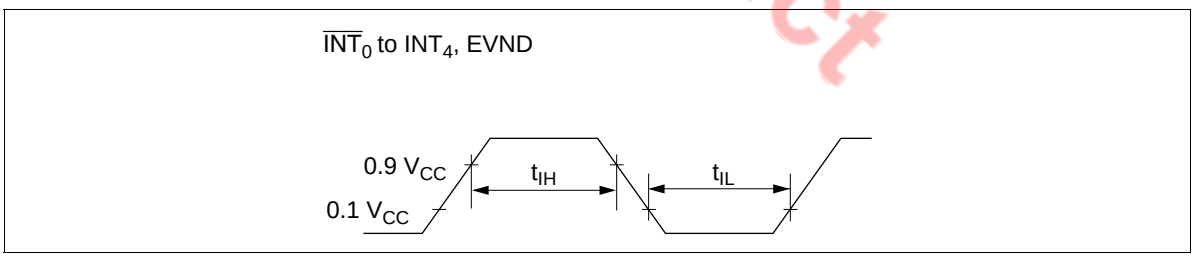

Figure 92 Interrupt Timing

EOL Product

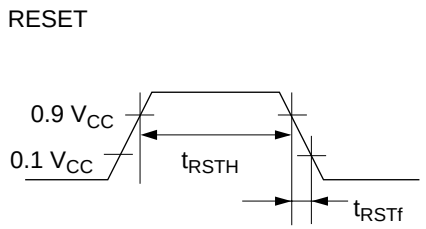

Figure 93 Reset Timing

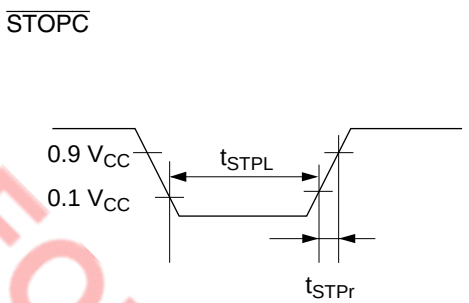

Figure 94 $\overline{\text{STOPC}}$ Timing

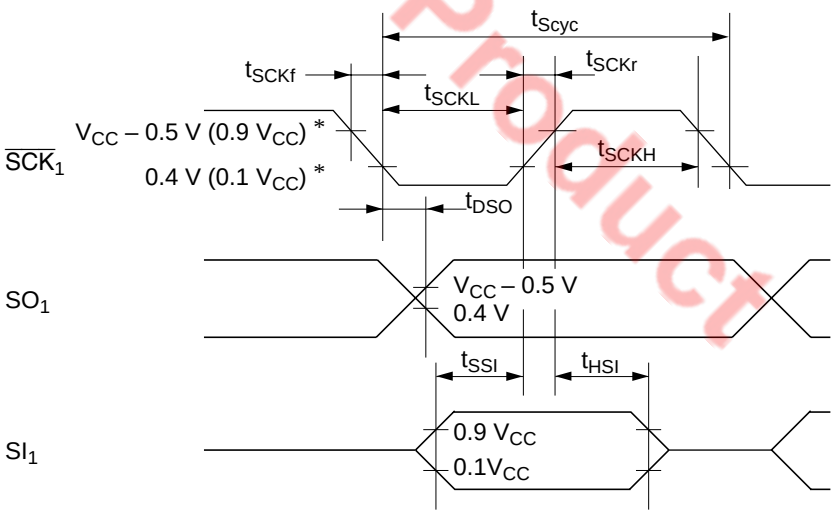

Note: * V_{CC} – 0.5 V and 0.4 V are the threshold voltages during serial clock output.
0.9 V_{CC} and 0.1 V_{CC} are the threshold voltages during serial clock input.

Figure 95 Serial Interface Timing

EOL Product

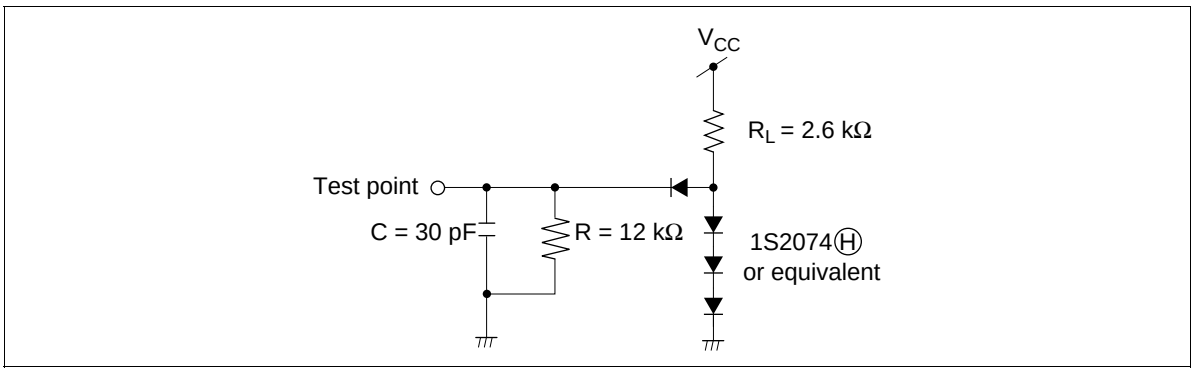

Figure 96 Timing Load Circuit

EOL Product

Notes on ROM Out

Please note the following when ordering HD404668, HD4046612, HD40A4668, or HD40A46612 ROM.

On ROM out, fill the ROM area indicated below with 1s to create the same data size as a 16-kword version (HD404669, HD40A4669). A 16-kword data size is required to change ROM data to mask manufacturing data since the program used is for a 16-kword version.

This limitation applies when using an EPROM or a data base.

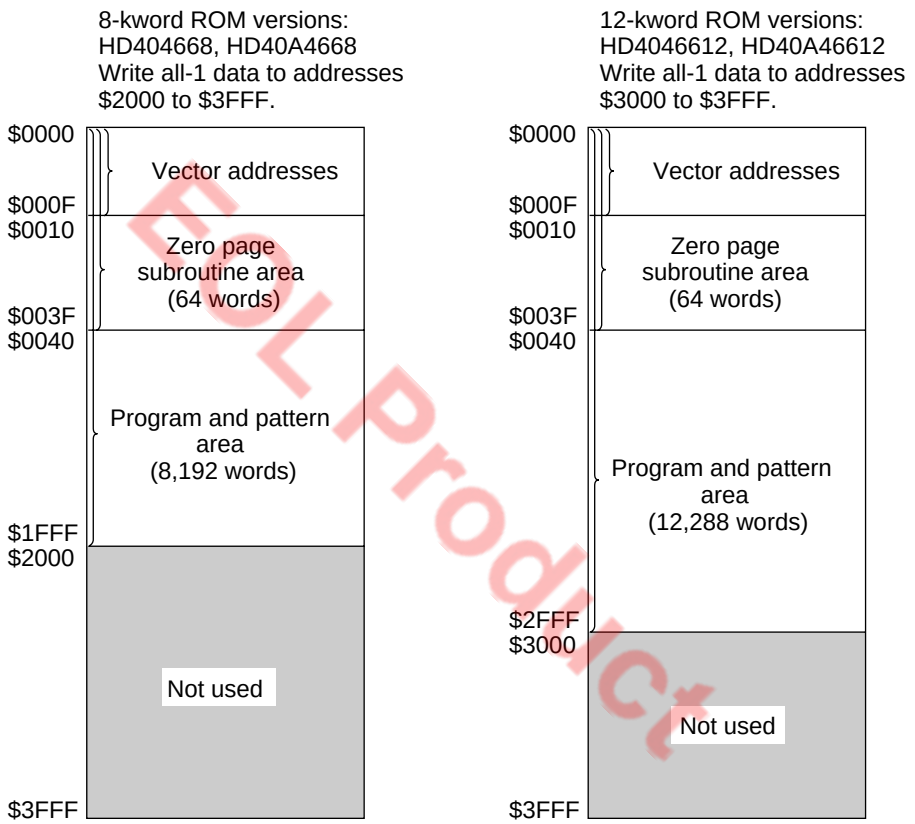

Note: Write all-1 data in shaded areas.

EOL Product

HD404668/HD4046612/HD404669/HCD404669/HD40A4668/HD40A46612/HD40A4669 Option List

Please check off the appropriate applications and enter the necessary information.

Date of order	/ /
Customer	
Department	
Name	
ROM code name	
LSI number (Hitachi entry)	

1. ROM Size

☐	Standard operation version: HD404668	8-kword
☐	High-speed operation version: HD40A4668	
☐	Standard operation version: HD4046612	12-kword
☐	High-speed operation version: HD40A46612	
☐	Standard operation version: HD404669	16-kword
☐	High-speed operation version: HD40A4669	
☐	Chip version: HCD404669	

2. Optional Functions

*	☐	With 32-kHz CPU operation, with time-base for clock
*	☐	Without 32-kHz CPU operation, with time-base for clock
	☐	Without 32-kHz CPU operation, without time-base for clock

Note: * Options marked with an asterisk require a subsystem crystal oscillator (X1, X2).

3. ROM Code Data Type

Please specify the first type below (the upper bits and lower bits are mixed together), when using the EPROM on-package microcomputer type (including ZTAT™ version).

☐	The upper bits and lower bits are mixed together. The upper five bits and lower five bits are programmed to the same EPROM in alternating order (i.e., LULULU...).
☐	The upper bits and lower bits are separated. The upper five bits and lower five bits are programmed to different EPROMs

4. System Oscillator (OSC_1 and OSC_2)

☐	Ceramic oscillator	f =	MHz
☐	Crystal oscillator	f =	MHz
☐	External clock	f =	MHz

5. Stop Mode

☐	Used
☐	Not used

6. Package

☐	FP-64A
☐	Chip

Note: The specifications of shipped chips differ from of the package product. Please contact our sales staff for details.

EOL Product

Cautions

1. Hitachi neither warrants nor grants licenses of any rights of Hitachi's or any third party's patent, copyright, trademark, or other intellectual property rights for information contained in this document. Hitachi bears no responsibility for problems that may arise with third party's rights, including intellectual property rights, in connection with use of the information contained in this document.
2. Products and product specifications may be subject to change without notice. Confirm that you have received the latest product standards or specifications before final design, purchase or use.
3. Hitachi makes every attempt to ensure that its products are of high quality and reliability. However, contact Hitachi's sales office before using the product in an application that demands especially high quality and reliability or where its failure or malfunction may directly threaten human life or cause risk of bodily injury, such as aerospace, aeronautics, nuclear power, combustion control, transportation, traffic, safety equipment or medical equipment for life support.
4. Design your application so that the product is used within the ranges guaranteed by Hitachi particularly for maximum rating, operating supply voltage range, heat radiation characteristics, installation conditions and other characteristics. Hitachi bears no responsibility for failure or damage when used beyond the guaranteed ranges. Even within the guaranteed ranges, consider normally foreseeable failure rates or failure modes in semiconductor devices and employ systemic measures such as fail-safes, so that the equipment incorporating Hitachi product does not cause bodily injury, fire or other consequential damage due to operation of the Hitachi product.
5. This product is not designed to be radiation resistant.
6. No one is permitted to reproduce or duplicate, in any form, the whole or part of this document without written approval from Hitachi.
7. Contact Hitachi's sales office for any questions regarding this document or Hitachi semiconductor products.

EOL Product