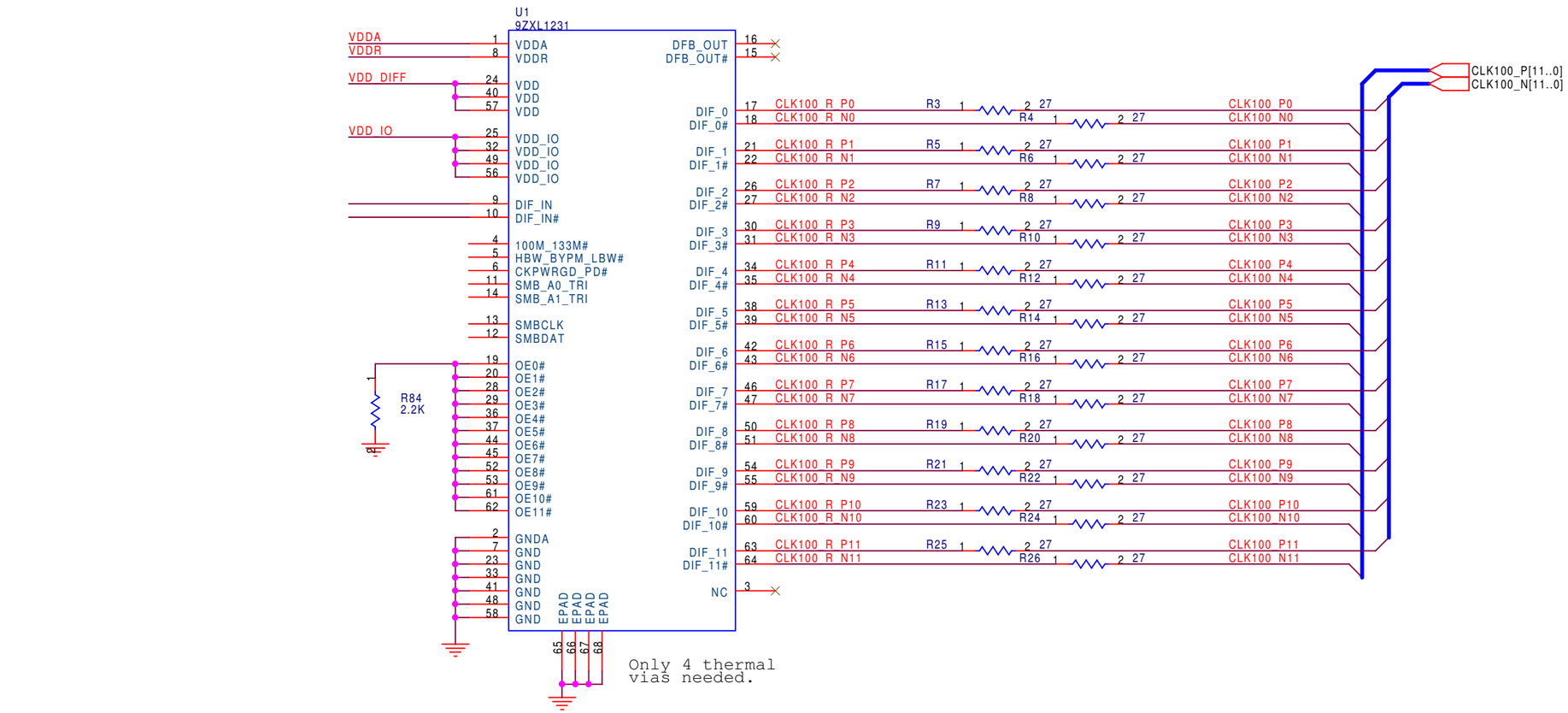

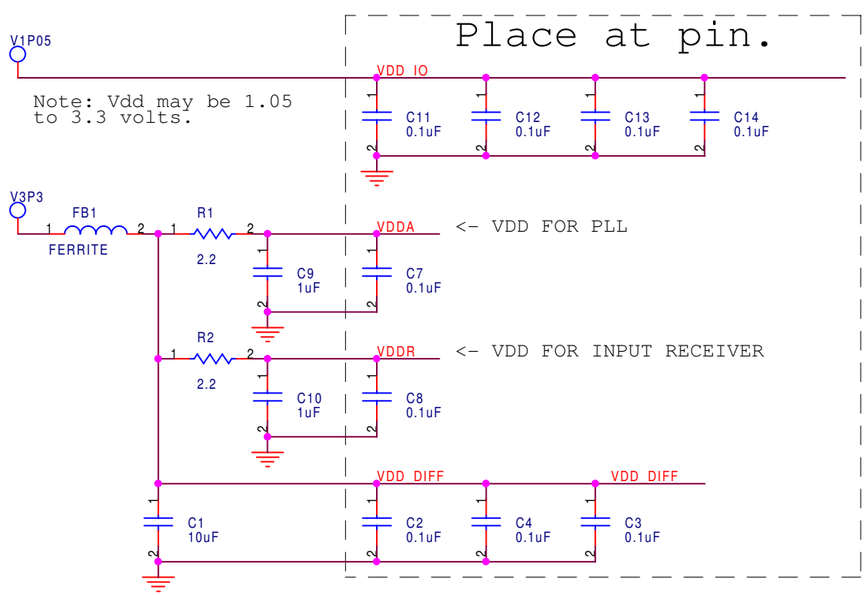

Tri-Level

SMB_A1	SMB_A0	Add
0	0	D8
0	M	DA
0	1	DE
M	0	C2
M	M	C4
M	1	C6
1	0	CA
1	M	CC
1	1	CE

HiBW_BypM_LoBW#	MODE
Low	PLL Lo BW
Mid	Bypass
High	PLL Hi BW

NOTE: PLL is OFF in Bypass Mode

NOTE:FERRITE BEADS =

Manufacture	Part Number	Z@100MHz	PkgSz	DC res.	Current(Ma)
muRata	BLM21A601R	600	0805	0.30	600
TDK	MMZ2012S601A	600	0805	0.30	600
STEWARD	HZ0805E601R	600	0805	0.30	600
AssocCmpTch	CBG0805-600-50	600	0805	0.30	600

Impedance dependent resistor values

	Zdiff =	Zdiff =
Resistor	100 ohm	85 ohm
Series	33 5%	27 5%

Revision history

Rev	Change
0.1	First publication

Integrated Device Technology
6024 Silver Creek Valley Road
San Jose, CA

Title	9ZXL1231 Power Filter
Size B	Document Number
Rev	0.1
Date:	Thursday, July 19, 2012
Sheet	1 of 1