Package Outline Drawing

PSC-5193-01
FQ0032AA
32-FCQFN 5.0 x 5.0 x 0.55 mm Body, 0.5 mm Pitch
Rev 00, Sep 30, 2025

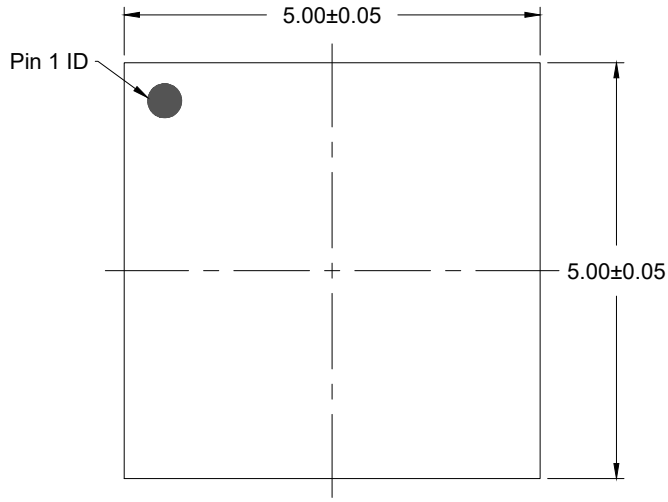

TOP VIEW

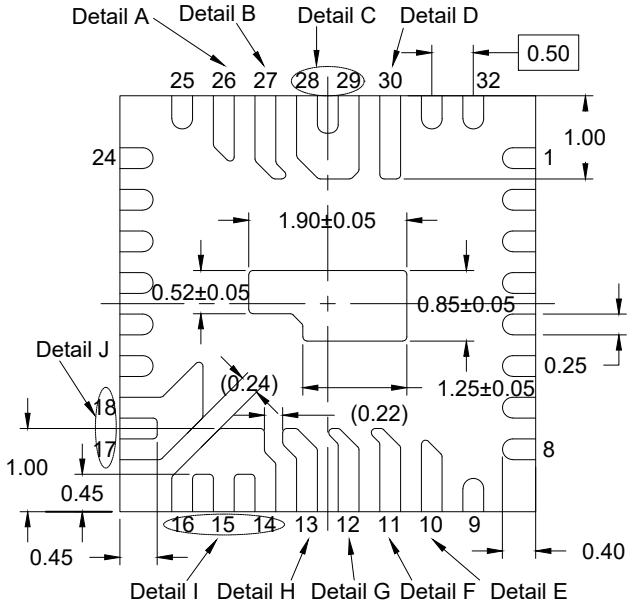

BOTTOM VIEW

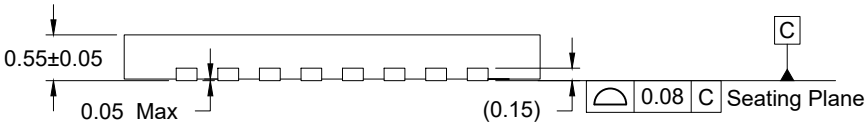

SIDE VIEW

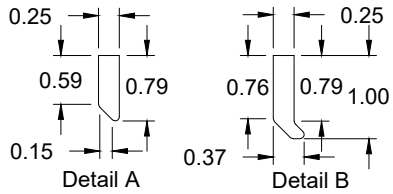

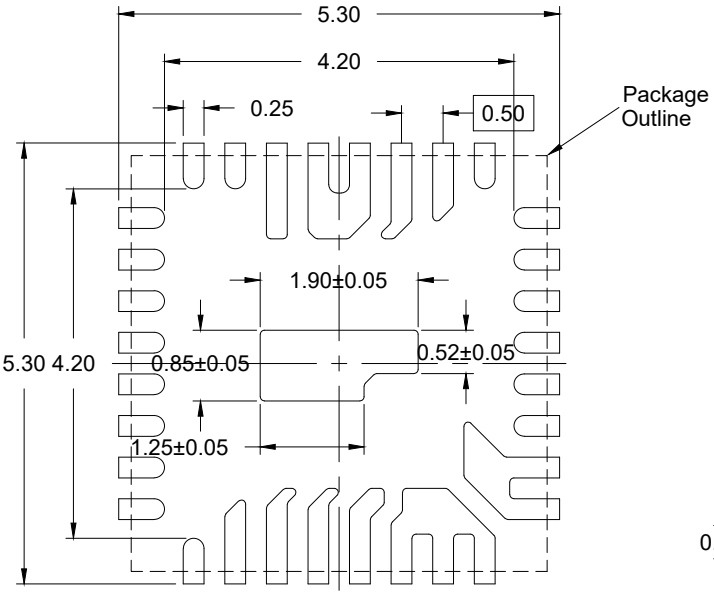

RECOMMENDED LAND PATTERN
(PCB Top View, NSMD Design)

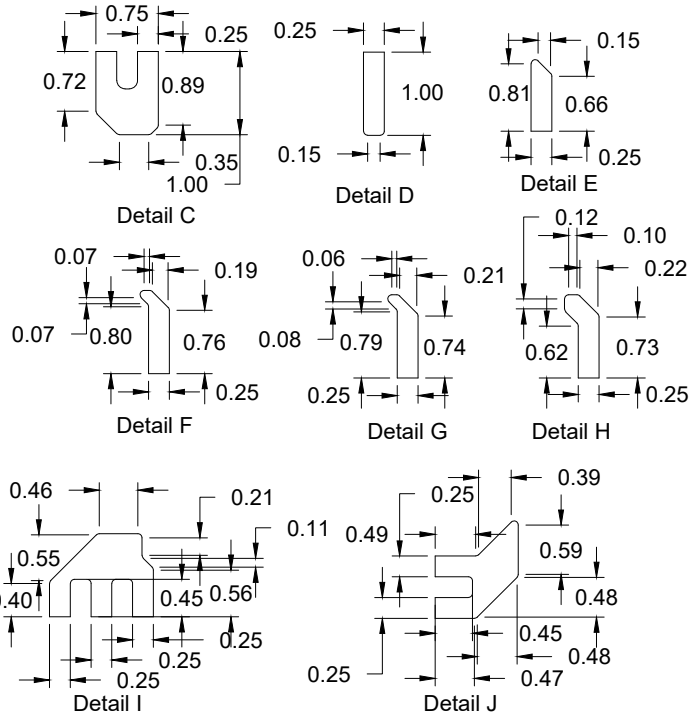

NOTES:

1. JEDEC compatible.
2. All dimensions are in mm and angles are in degrees.
3. Use ±0.05 mm for the non-toleranced dimensions.
4. Numbers in ( ) are for references only.

© Renesas Electronics Corporation