High Temperature Behavior of ISL3158AE

AN1474
Rev 0.00
Jul 7, 2009

Description

The ISL3158AE is a 5V based RS-485 MIL temp rated transceiver aimed at addressing applications that require high operating temperatures. The receiver inputs A and B are presented in pins 6 and 7; when RE# is low this differential input signal is processed and available at the RO pin. The Driver input is presented at pin 4 and the driver differential outputs Z and Y are available at pins 6 and 7 respectively when DE is high. This Application Note aims at characterizing the device at temperatures of +125°C through +200°C.

Device Pinout

ISL3158AE
(8 LD SOIC)
TOP VIEW

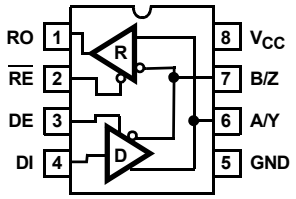

Figure 1 shows the evaluation board schematic. The device evaluation board is common to both TX and RX. The mode of operation is determined by the logic presented to the DE and RE# pins.

RX High Temperature Test

Figure 2 shows the High temperature test setup. The board wired up as the transmitter is called the EVALB TX and the one wired the receiver is called the EVALB RX. The differential lines were hooked up through 200ft of twisted pair cable terminated on either side by 120Ω. The V_{IN} was set to a worst case of 4.5V. The driver input of the EVALB TX is connected to a function generator capable of providing fast rise and fall times. The function generator output was set to provide a burst mode of five pulses at a bit rate of 10Mbps.The RX device was wired up with two thermocouples one placed on the device case top and the other placed on the PWB near the GND pin. The RX device was heated using a temperature forcing system from +25°C to +200°C. The Rx shows two threshold points as follows:

At a Data Rate of 10Mbps:

1. Pulse width 70% threshold at a die temperature of min. = +160°C and max. = +175°C while operating at a data rate of 10Mbps
2. First pulse missing Threshold at a die temperature range of min. = +175°C and a max of +191°C

At a Data Rate of 400kbps:

1. Pulse width 90% threshold at a die temp of min. = +190°C and max = +196°C while operating at a data rate of 10Mbps

As can be seen, operation at a data rate of 10Mbps limits the device operation to +160°C or less and a data rate of 400kbps allows the device to operate at a temperature of about +190°C. See “Typical Performance Curves” on page 3.

This is based on a sample size of 15pcs. and a six sigma distribution.

TX High Temperature Test

The TX was tested using a the EVALB TX portion of Figure 2. The 200ft cable was disconnected and terminations of 100Ω and 54Ω were connected based on test requirement. The parameters tested were: Driver differential output voltage, propagation delay, and skew. The results are per the “Typical Performance Curves” on page 3.

Supply Current vs High Temperature

The supply current is found to have a knee at around +195°C, and increases rapidly thereafter.The supply current with (driver enabled) DE high is typically around 650µA. This value increases to about 1085µA at +240°C. With DE connected to GND (driver disabled) the supply current drops to about 450µA typical. This value of supply current increases from a temperature of +200°C and higher to about 704.5µA.

Driver input vs High Temperature

The Driver input is found to latch to a 5V state at around +215°C. This causes the drive signal to ride on a 5V DC. The driver output is non-existent. Some device failures were observed when left in this state for prolonged period of time. See Figures 1 and 2.

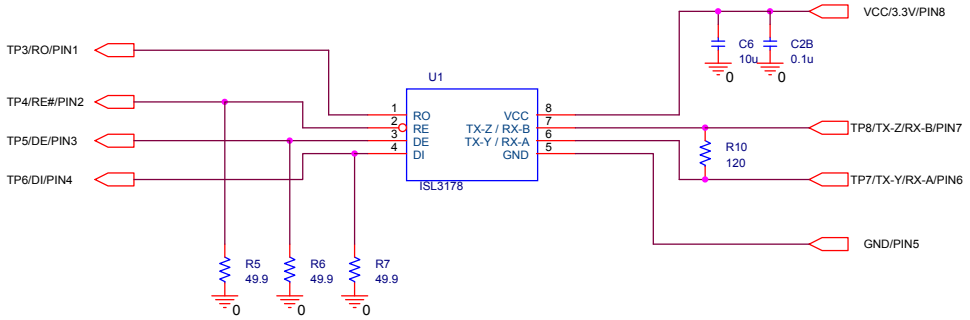

FIGURE 1. EVALUATION BOARD SCHEMATIC

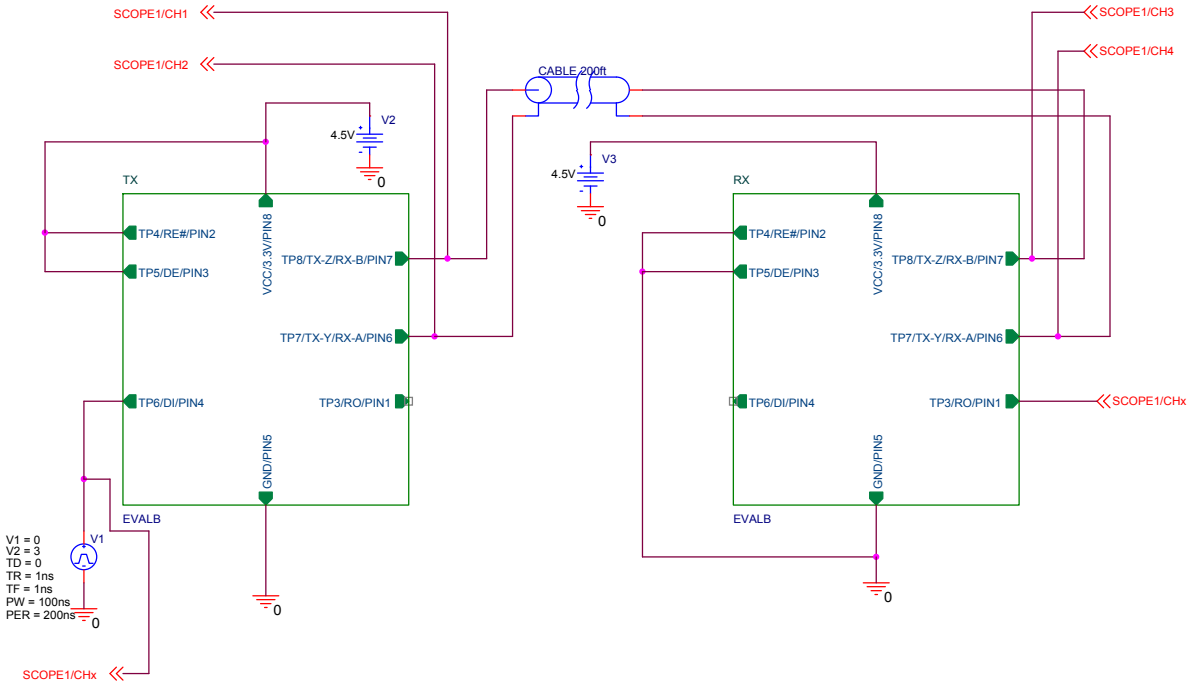

FIGURE 2. HIGH TEMPERATURE TEST SETUP

Typical Performance Curves

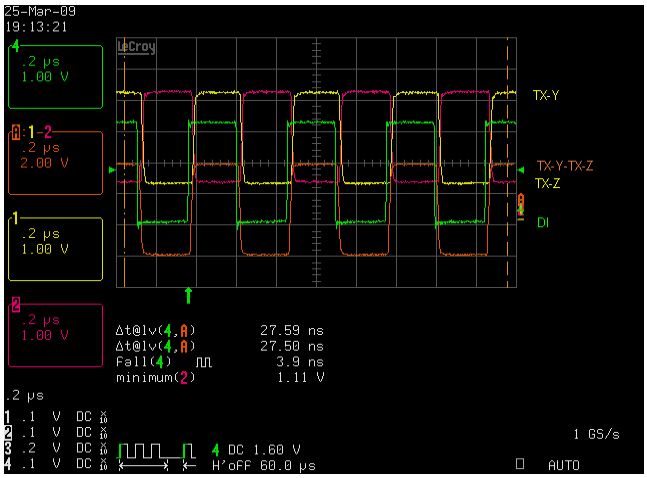

FIGURE 3. DRIVER INPUT NORMAL AT +25°C

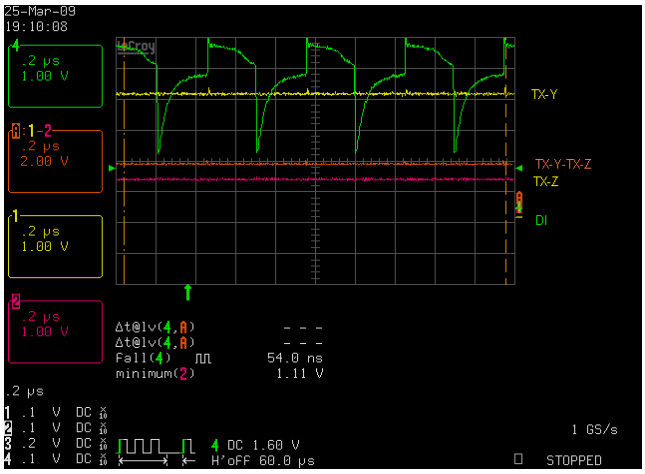

FIGURE 4. DRIVER INPUT LATCHED TO 5V at +215°C TYP

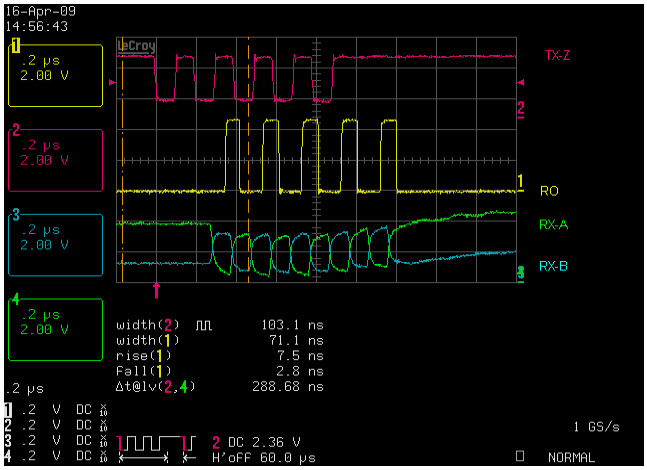

FIGURE 5. RO OUTPUT PW IS 70% AT +170.5°C TYP

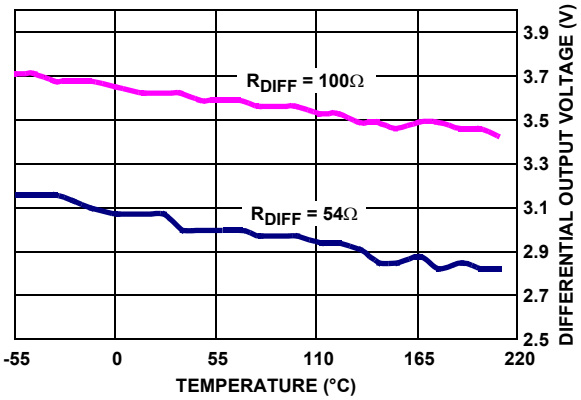

FIGURE 6. DRIVER DIFFERENTIAL OUTPUT VOLTAGE vs TEMPERATURE

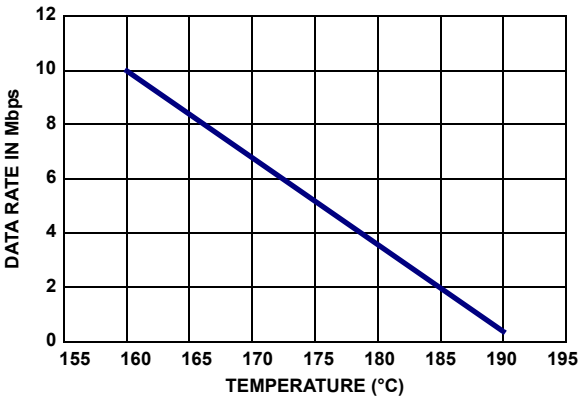

FIGURE 7. DATA RATE vs TEMPERATURE

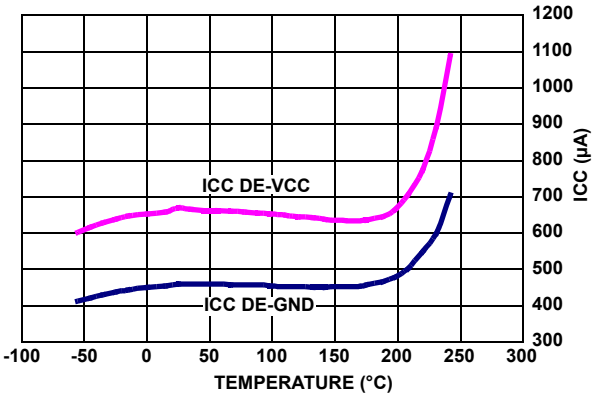

FIGURE 8. SUPPLY CURRENT vs TEMPERATURE

Typical Performance Curves (Continued)

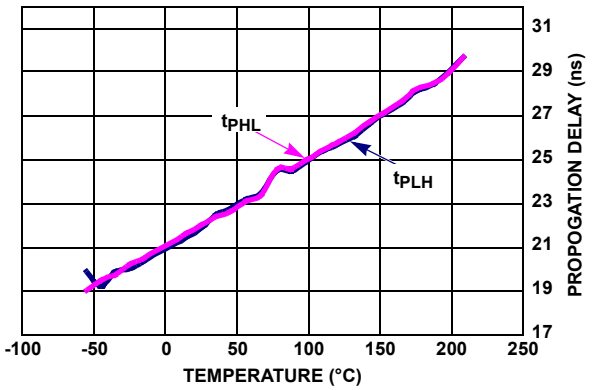

FIGURE 9. DRIVER DIFFERENTIAL PROPAGATION DELAY vs TEMPERATURE

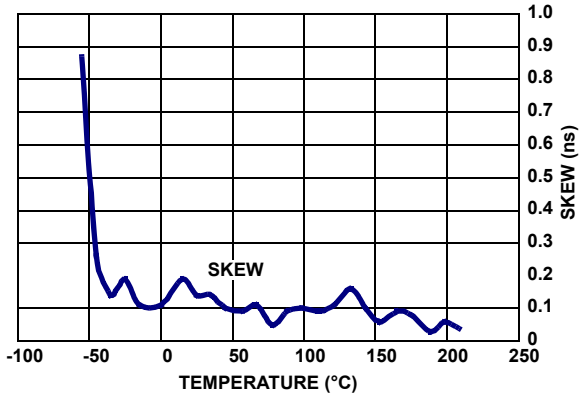

FIGURE 10. DRIVER DIFFERENTIAL SKEW vs TEMPERATURE

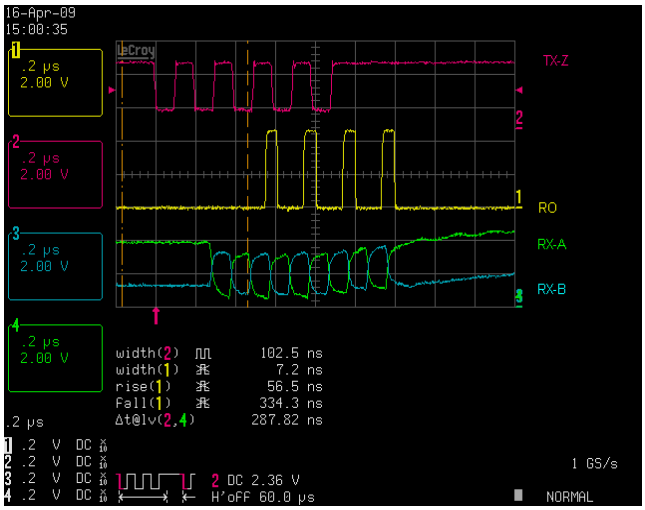

FIGURE 11. PULSE MISSING AT +185°C TYP AND 10Mbps

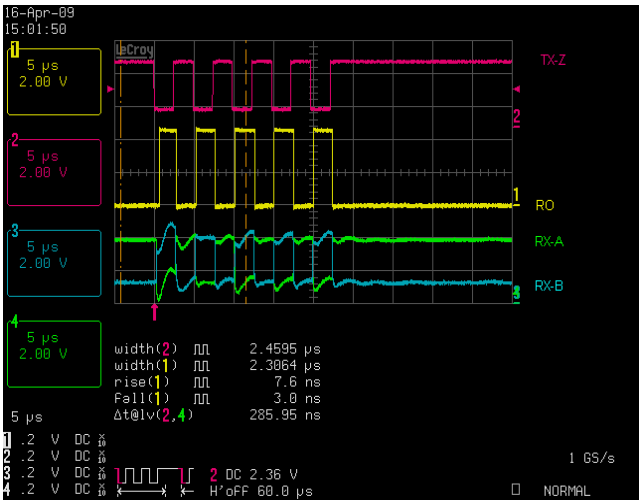

FIGURE 12. TX/RX WAVEFORM AT +194°C TYP AND 400kbps

Notice

1. Descriptions of circuits, software and other related information in this document are provided only to illustrate the operation of semiconductor products and application examples. You are fully responsible for the incorporation or any other use of the circuits, software, and information in the design of your product or system. Renesas Electronics disclaims any and all liability for any losses and damages incurred by you or third parties arising from the use of these circuits, software, or information.
2. Renesas Electronics hereby expressly disclaims any warranties against and liability for infringement or any other claims involving patents, copyrights, or other intellectual property rights of third parties, by or arising from the use of Renesas Electronics products or technical information described in this document, including but not limited to, the product data, drawings, charts, programs, algorithms, and application examples.
3. No license, express, implied or otherwise, is granted hereby under any patents, copyrights or other intellectual property rights of Renesas Electronics or others.
4. You shall not alter, modify, copy, or reverse engineer any Renesas Electronics product, whether in whole or in part. Renesas Electronics disclaims any and all liability for any losses or damages incurred by you or third parties arising from such alteration, modification, copying or reverse engineering.
5. Renesas Electronics products are classified according to the following two quality grades: “Standard” and “High Quality”. The intended applications for each Renesas Electronics product depends on the product’s quality grade, as indicated below.
   "Standard": Computers; office equipment; communications equipment; test and measurement equipment; audio and visual equipment; home electronic appliances; machine tools; personal electronic equipment; industrial robots; etc.
   "High Quality": Transportation equipment (automobiles, trains, ships, etc.); traffic control (traffic lights); large-scale communication equipment; key financial terminal systems; safety control equipment; etc.
   Unless expressly designated as a high reliability product or a product for harsh environments in a Renesas Electronics data sheet or other Renesas Electronics document, Renesas Electronics products are not intended or authorized for use in products or systems that may pose a direct threat to human life or bodily injury (artificial life support devices or systems; surgical implantations; etc.), or may cause serious property damage (space system; undersea repeaters; nuclear power control systems; aircraft control systems; key plant systems; military equipment; etc.). Renesas Electronics disclaims any and all liability for any damages or losses incurred by you or any third parties arising from the use of any Renesas Electronics product that is inconsistent with any Renesas Electronics data sheet, user’s manual or other Renesas Electronics document.
6. When using Renesas Electronics products, refer to the latest product information (data sheets, user’s manuals, application notes, “General Notes for Handling and Using Semiconductor Devices” in the reliability handbook, etc.), and ensure that usage conditions are within the ranges specified by Renesas Electronics with respect to maximum ratings, operating power supply voltage range, heat dissipation characteristics, installation, etc. Renesas Electronics disclaims any and all liability for any malfunctions, failure or accident arising out of the use of Renesas Electronics products outside of such specified ranges.
7. Although Renesas Electronics endeavors to improve the quality and reliability of Renesas Electronics products, semiconductor products have specific characteristics, such as the occurrence of failure at a certain rate and malfunctions under certain use conditions. Unless designated as a high reliability product or a product for harsh environments in a Renesas Electronics data sheet or other Renesas Electronics document, Renesas Electronics products are not subject to radiation resistance design. You are responsible for implementing safety measures to guard against the possibility of bodily injury, injury or damage caused by fire, and/or danger to the public in the event of a failure or malfunction of Renesas Electronics products, such as safety design for hardware and software, including but not limited to redundancy, fire control and malfunction prevention, appropriate treatment for aging degradation or any other appropriate measures. Because the evaluation of microcomputer software alone is very difficult and impractical, you are responsible for evaluating the safety of the final products or systems manufactured by you.
8. Please contact a Renesas Electronics sales office for details as to environmental matters such as the environmental compatibility of each Renesas Electronics product. You are responsible for carefully and sufficiently investigating applicable laws and regulations that regulate the inclusion or use of controlled substances, including without limitation, the EU RoHS Directive, and using Renesas Electronics products in compliance with all these applicable laws and regulations. Renesas Electronics disclaims any and all liability for damages or losses occurring as a result of your noncompliance with applicable laws and regulations.
9. Renesas Electronics products and technologies shall not be used for or incorporated into any products or systems whose manufacture, use, or sale is prohibited under any applicable domestic or foreign laws or regulations. You shall comply with any applicable export control laws and regulations promulgated and administered by the governments of any countries asserting jurisdiction over the parties or transactions.
10. It is the responsibility of the buyer or distributor of Renesas Electronics products, or any other party who distributes, disposes of, or otherwise sells or transfers the product to a third party, to notify such third party in advance of the contents and conditions set forth in this document.
11. This document shall not be reprinted, reproduced or duplicated in any form, in whole or in part, without prior written consent of Renesas Electronics.
12. Please contact a Renesas Electronics sales office if you have any questions regarding the information contained in this document or Renesas Electronics products.

(Note 1) “Renesas Electronics” as used in this document means Renesas Electronics Corporation and also includes its directly or indirectly controlled subsidiaries.

(Note 2) “Renesas Electronics product(s)” means any product developed or manufactured by or for Renesas Electronics.

(Rev.4.0-1 November 2017)

SALES OFFICES Renesas Electronics Corporation http://www.renesas.com

Refer to "http://www.renesas.com/" for the latest and detailed information.

Renesas Electronics America Inc.
1001 Murphy Ranch Road, Milpitas, CA 95035, U.S.A.
Tel: +1-408-432-8888, Fax: +1-408-434-5351

Renesas Electronics Canada Limited
9251 Yonge Street, Suite 8309 Richmond Hill, Ontario Canada L4C 9T3
Tel: +1-905-237-2004

Renesas Electronics Europe Limited
Dukes Meadow, Millboard Road, Bourne End, Buckinghamshire, SL8 5FH, U.K
Tel: +44-1628-651-700, Fax: +44-1628-651-804

Renesas Electronics Europe GmbH
Arcadiastrasse 10, 40472 Düsseldorf, Germany
Tel: +49-211-6503-0, Fax: +49-211-6503-1327

Renesas Electronics (China) Co., Ltd.
Room 1709 Quantum Plaza, No.27 ZhichunLu, Haidian District, Beijing, 100191 P. R. China
Tel: +86-10-8235-1155, Fax: +86-10-8235-7679

Renesas Electronics (Shanghai) Co., Ltd.
Unit 301, Tower A, Central Towers, 555 Langao Road, Putuo District, Shanghai, 200333 P. R. China
Tel: +86-21-2226-0888, Fax: +86-21-2226-0999

Renesas Electronics Hong Kong Limited
Unit 1601-1611, 16/F., Tower 2, Grand Century Place, 193 Prince Edward Road West, Mongkok, Kowloon, Hong Kong
Tel: +852-2265-6688, Fax: +852 2886-9022

Renesas Electronics Taiwan Co., Ltd.
13F, No. 363, Fu Shing North Road, Taipei 10543, Taiwan
Tel: +886-2-8175-9600, Fax: +886 2-8175-9670

Renesas Electronics Singapore Pte. Ltd.
80 Bendemeer Road, Unit #06-02 Hyflux Innovation Centre, Singapore 339949
Tel: +65-6213-0200, Fax: +65-6213-0300

Renesas Electronics Malaysia Sdn.Bhd.
Unit 1207, Block B, Menara Amcorp, Amcorp Trade Centre, No. 18, Jln Persiaran Barat, 46050 Petaling Jaya, Selangor Darul Ehsan, Malaysia
Tel: +60-3-7955-9390, Fax: +60-3-7955-9510

Renesas Electronics India Pvt. Ltd.
No.777C, 100 Feet Road, HAL 2nd Stage, Indiranagar, Bangalore 560 038, India
Tel: +91-80-67208700, Fax: +91-80-67208777

Renesas Electronics Korea Co., Ltd.
17F, KAMCO Yangjae Tower, 262, Gangnam-daero, Gangnam-gu, Seoul, 06265 Korea
Tel: +82-2-558-3737, Fax: +82-2-558-5338

Colophon 7.0