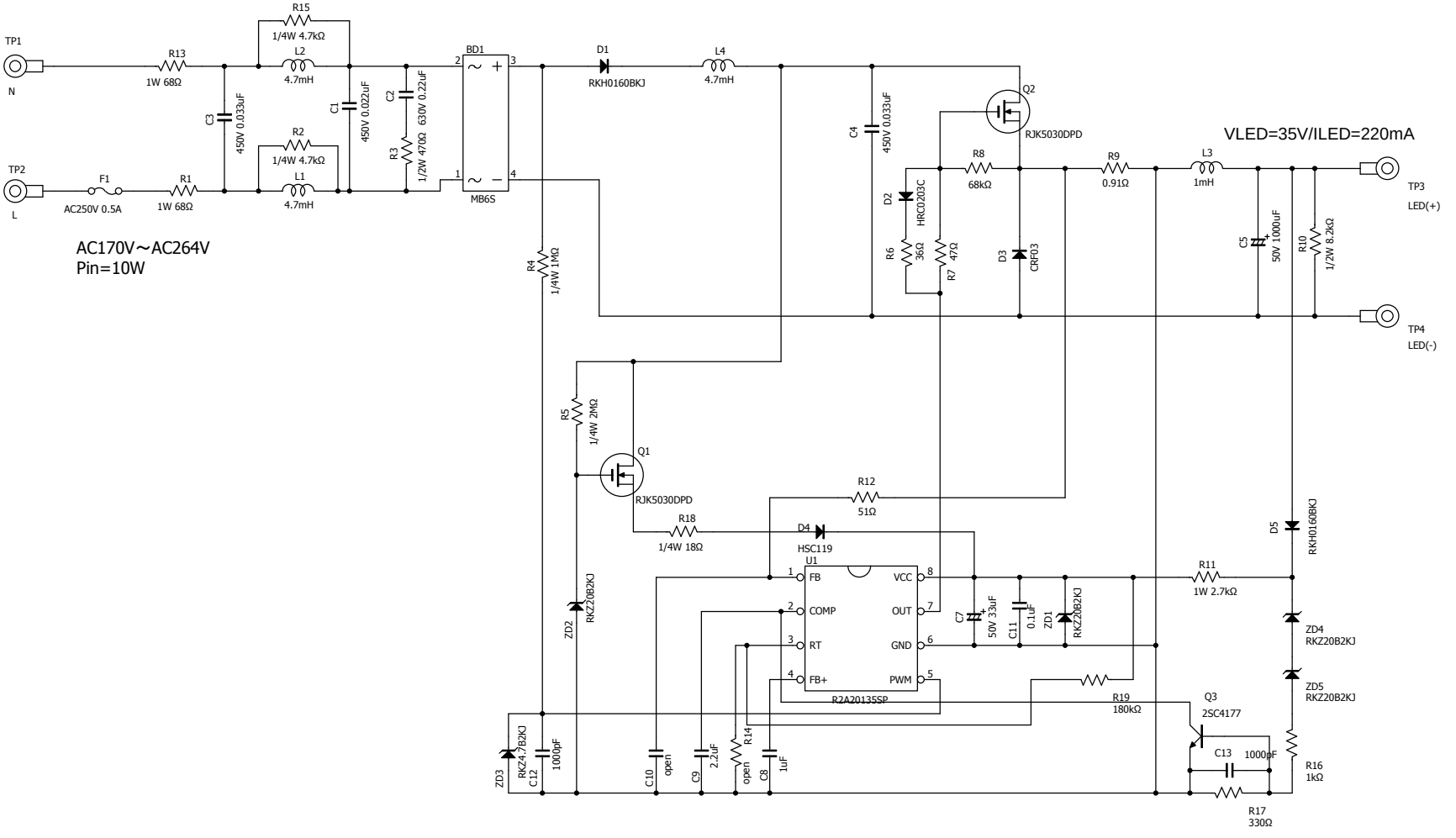
TP1
N
TP2
L
R13
1W 68Ω
R15
1/4W 4.7kΩ
L2
4.7mH
R2
1/4W 4.7kΩ
L1
4.7mH
F1
AC250V 0.5A
R1
1W 68Ω
C3
450V 0.033uF
C1
450V 0.022uF
C2
630V 0.22uF
R3
1/2W 470Ω
BD1
MB6S
D1
RKH0160BKJ
L4
4.7mH
C4
450V 0.033uF
Q2
RJK5030DPD
R8
68kΩ
R9
0.91Ω
L3
1mH
VLED=35V/ILED=220mA
TP3
LED(+)
TP4
LED(-)
D2
HRC0203C
R6
36Ω
R7
47Ω
D3
CRF03
C5
50V 1000uF
R10
1/2W 8.2kΩ
AC170V～AC264V
Pin=10W
R4
1/4W 1MΩ
R5
1/4W 2MΩ
Q1
RJK5030DPD
R12
51Ω
R18
1/4W 18Ω
D4
HSC119
U1
FB
COMP
RT
FB+
VCC
OUT
GND
PWM
R2A20135SP
C7
50V 33uF
C11
0.1uF
ZD1
RKZ20B2KJ
D5
RKH0160BKJ
R11
1W 2.7kΩ
ZD4
RKZ20B2KJ
ZD5
RKZ20B2KJ
ZD2
RKZ20B2KJ
R19
180kΩ
Q3
2SC4177
C13
1000pF
R16
1kΩ
R17
330Ω
ZD3
RKZ4.7B2KJ
C12
1000pF
C10
open
C9
2.2uF
R14
open
C8
1uF