JEITA Package Code	RENESAS Code	Previous Code	MASS[Typ.]
P-HTFQFP128-14x14-0.40	PTQP0128LC-A	128PFV-A	0.5g

NOTE)
1. DIMENSIONS "*1" AND "*2" DO NOT INCLUDE MOLD FLASH.
2. DIMENSION "*3" DOES NOT INCLUDE TRIM OFFSET.
3. *4 THERE ARE SOME VARIATIONS FOR D2/E1.

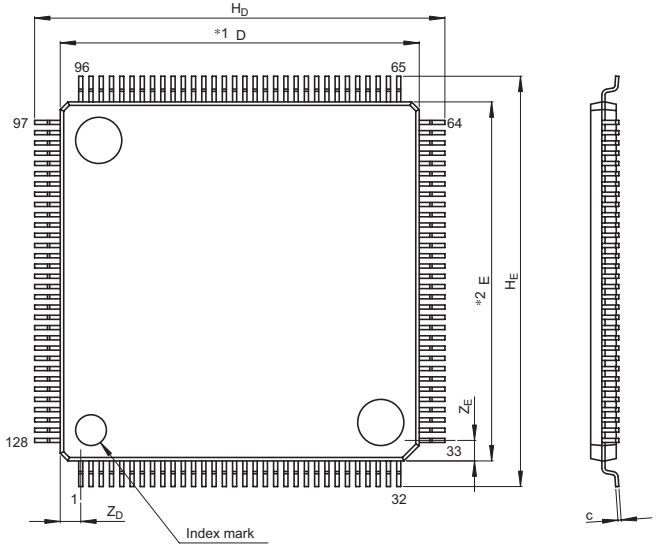

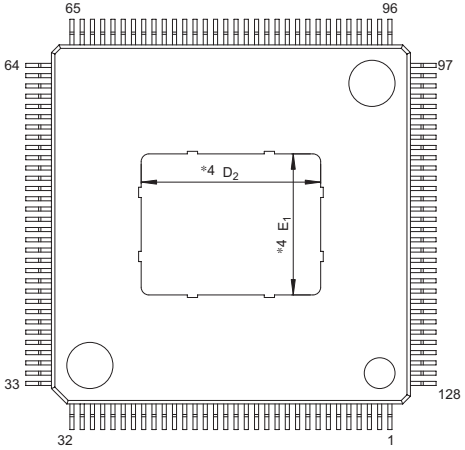

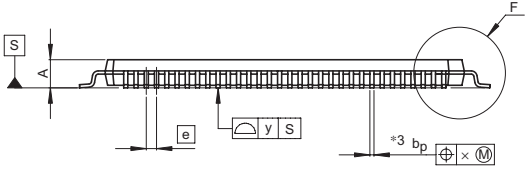

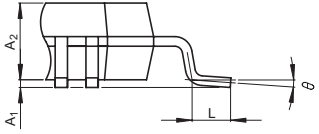

Detail F

Reference Symbol	Dimension in Millimeters		
	Min	Nom	Max
D	13.9	14.0	14.1
E	13.9	14.0	14.1
A_2	—	1.0	—
H_D	15.8	16.0	16.2
H_E	15.8	16.0	16.2
A	—	—	1.2
A_1	0.05	0.1	0.15
b_p	0.13	0.18	0.23
c	0.09	0.145	0.20
θ	0°	—	8°
e	—	0.4	—
x	—	—	0.07
y	—	—	0.08
Z_D	—	0.8	—
Z_E	—	0.8	—
L	0.4	0.5	0.6
D_2	—	7.0	—
E_1	—	5.5	—