As of January, 2003

Unit: mm

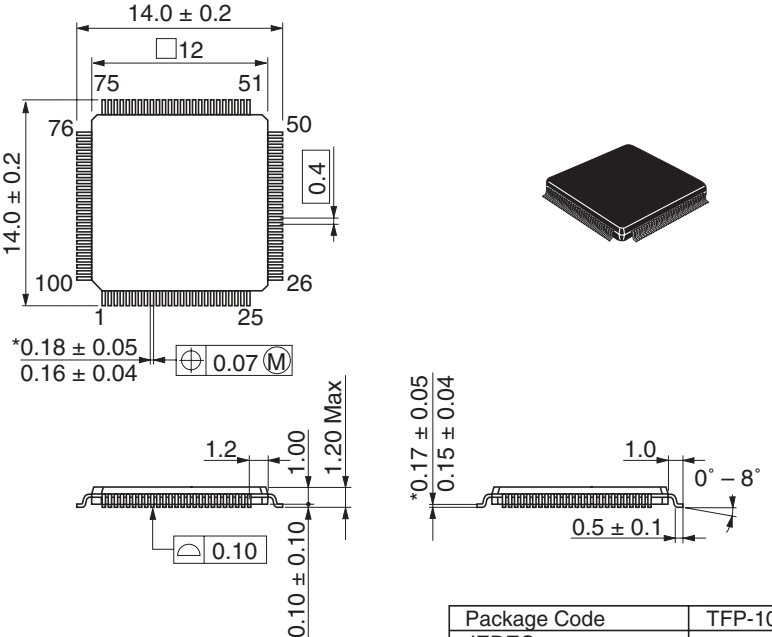

Package Code	TFP-100G
JEDEC	—
JEITA	Conforms
Mass (reference value)	0.4 g

*Dimension including the plating thickness / Base material dimension